AUTOMATIC TRANSMISSION SYSTEM

PRECAUTION

1. PRECAUTION

NOTICE:

- **Perform the RESET MEMORY (AT initialization) when replacing the automatic transmission assembly, engine assembly or ECM (See page AT-19).**
- **Perform the REGISTRATION (VIN registration) when replacing the ECM (See page ES-15).**

HINT:

RESET MEMORY cannot be completed by only disconnecting the negative cable from the battery.

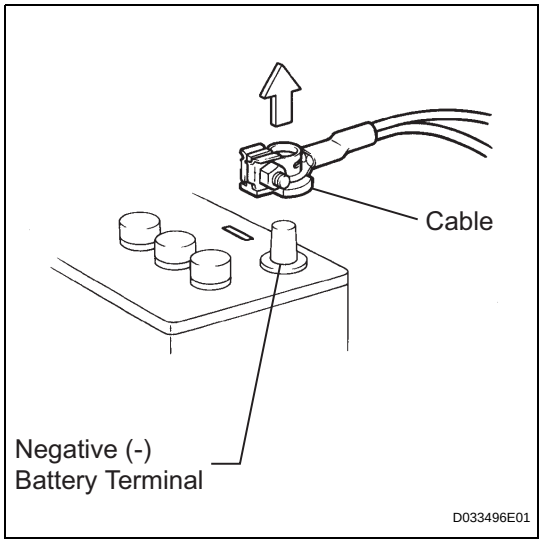

2. DISCONNECT AND RECONNECT CABLE OF NEGATIVE BATTERY TERMINAL

(a) Before performing electronic work, disconnect the cable from the negative (-) battery terminal in order to prevent it from shorting and burning out.

(b) Before disconnecting and reconnecting the battery cable, turn the ignition switch OFF and the headlight dimmer switch OFF. Then loosen the terminal nut completely. Do not damage the cable or terminal.

(c) When the battery cable is disconnected, the clock and radio settings and stored DTCs are erased. Therefore, before disconnecting the battery cable, make a notes of them.

NOTICE:

When the cable is disconnected from the negative (-) battery terminal, initialize the following system(s) after the cable is reconnected.

System Name	See Procedure
Meter / Gauge system	ME-10

3. CONNECT BATTERY NEGATIVE TERMINAL

(a) Connect the battery negative terminal to the cable and run the engine at no less than 2,000 rpm for 2 minutes.

NOTICE:

If the engine exceeds 2,000 rpm, the A/C magnet clutch is automatically disengaged by the compressor protection control system.

4. PRECAUTION FOR DISASSEMBLY AND REASSEMBLY

CAUTION:

When using compressed air, always aim away from yourself to prevent Automatic Transmission Fluid (ATF) or kerosene from spraying on your face.

NOTICE:

- **The automatic transmission is composed of precision-made parts, necessitating careful inspection before reassembly because even a small nick could cause fluid leakage or affect performance.**
- **The procedures are organized so that you work on only one component group at a time. This will help avoid confusion with similar-looking parts of different sub-assemblies being on your workbench at the same time.**
- **The component groups are inspected and repaired from the converter housing side.**
- **Whenever possible, complete the inspection, repair and reassembly before proceeding to the next component group. If a defect is found in a certain component group during reassembly, inspect and repair this group immediately. If a component group cannot be assembled because parts are being ordered, be sure to keep all parts of the group in a separate container while proceeding with disassembly, inspection, repair and reassembly of other component groups.**
- **When changing the automatic transmission fluid, use only "Toyota Genuine ATF WS" (ATF JWS3324 or NWS9638).**
- **All disassembled parts should be washed clean, and compressed air should be blown through any fluid passages and holes.**
- **Dry all parts with compressed air. Never use cloth.**
- **The recommended ATF or kerosene should be used for cleaning.**
- **After cleaning, the parts should be arranged in the order they were removed for efficient inspection, repairs, and reassembly.**
- **When disassembling a valve body, be sure to match each valve with its corresponding spring.**
- **New discs for the brakes and clutches that will be used for replacement must be soaked in ATF for at least 15 minutes before reassembly.**
- **All oil seal rings, clutch discs, clutch plates, rotating parts, and sliding surfaces should be coated with ATF prior to reassembly.**
- **All old gaskets and rubber O-rings must be replaced.**
- **Do not apply adhesive cement to gaskets and similar parts.**
- **Make sure that the ends of the snap rings are not aligned with any cutouts. Also make sure that snap rings are correctly installed into the grooves.**
- **If a worn bushing is to be replaced, the sub-assembly containing the bushing must also be replaced.**

- **Check the thrust bearings and races for wear or damage. Replace if necessary.**
- **Use petroleum jelly to keep parts in place.**
- **When working with FIPG material, perform the following:**
  Using a razor blade and gasket scraper, remove all old FIPG material from the gasket surface.
  Clean all components thoroughly to remove all foreign matter.
  Clean both sealing surfaces with a non-residue solvent.
  Apply FIPG material in a continuous line approximately 1 mm (0.04 in.) in diameter on the sealing surface.
  Reassemble parts within 10 minutes of applying FIPG material. Failing to do so will require the FIPG material to be removed and reapplied.

DEFINITION OF TERMS

Term	Definition
Monitor description	Description of what the ECM monitors and how it detects malfunctions (monitoring purpose and its details).
Related DTCs	A group of diagnostic trouble codes that are output by the ECM based on the same malfunction detection logic.
Typical enabling conditions	Preconditions that allow the ECM to detect malfunctions. With all preconditions satisfied, the ECM sets the DTC when the monitored value(s) exceeds the malfunction threshold(s).
Sequence of operation	The priority order that is applied to monitoring, if multiple sensors and components are used to detect the malfunction. While one sensor is being monitored, the next sensor or component will not be monitored until the previous monitoring has been completed.
Required sensor/components	The sensors and components that are used by the ECM to detect malfunctions.
Frequency of operation	The number of times that the ECM checks for malfunctions per driving cycle. "Once per driving cycle" means that the ECM detects the malfunction only one time during a single driving cycle. "Continuous" means that the ECM detects the malfunction every time the enabling conditions are met.
Duration	The minimum time that the ECM must detect a continuous deviation in the monitored value(s) before setting a DTC. This timing begins after the "typical enabling conditions" are met.
Malfunction thresholds	Beyond this value, the ECM determines that there is a malfunction and sets a DTC.
MIL operation	MIL illumination timing after a defect is detected. "Immediate" means that the ECM illuminates the MIL the instant the ECM determines that there is a malfunction. "2 driving cycles" means that the ECM illuminates the MIL if the same malfunction is detected again in a 2nd driving cycle.
Component operating range	Normal operation range of sensors and solenoids under normal driving conditions. These ranges are for a reference. They cannot be used to determine whether a sensor or solenoid is defective or not.

PARTS LOCATION

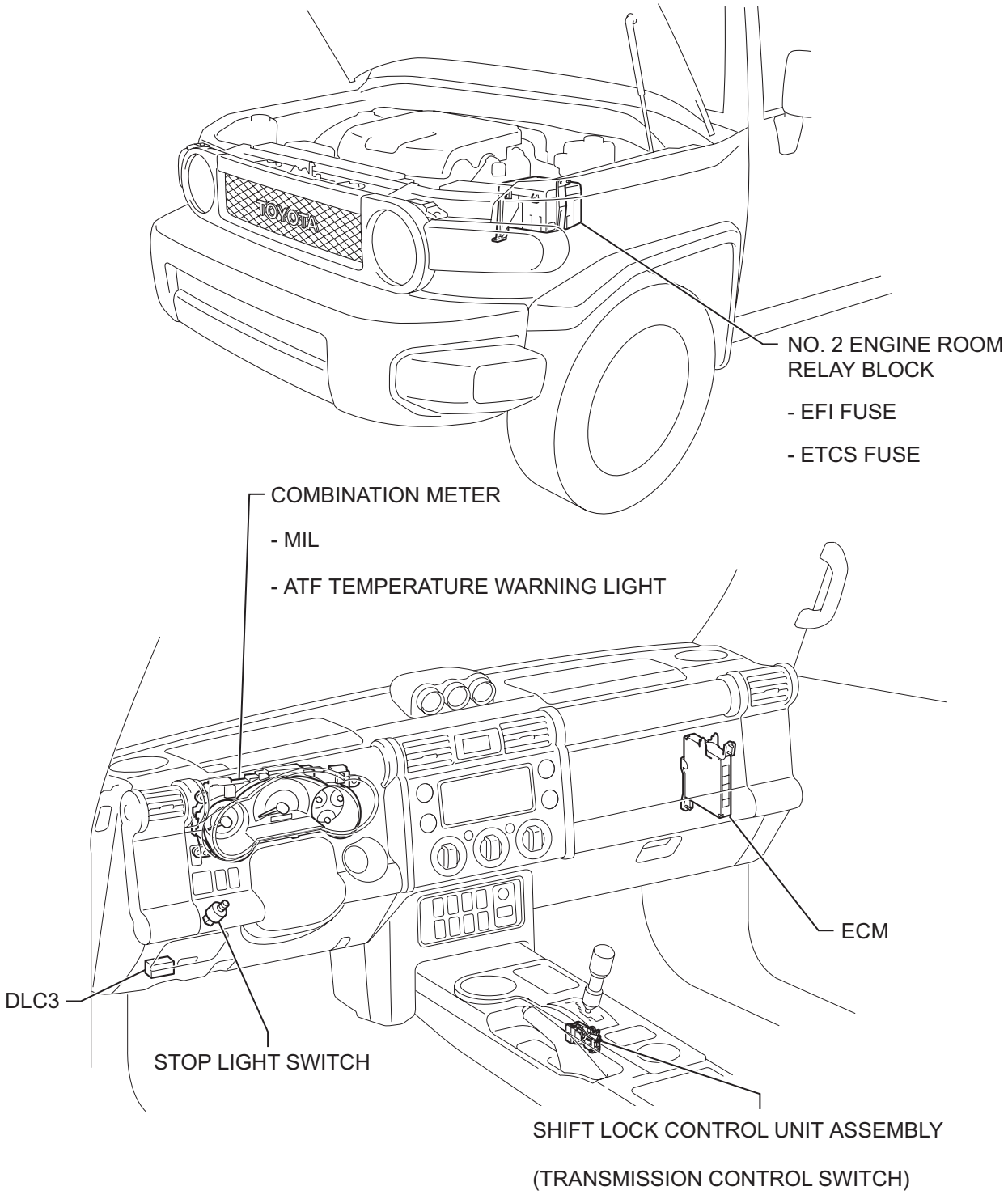

AT

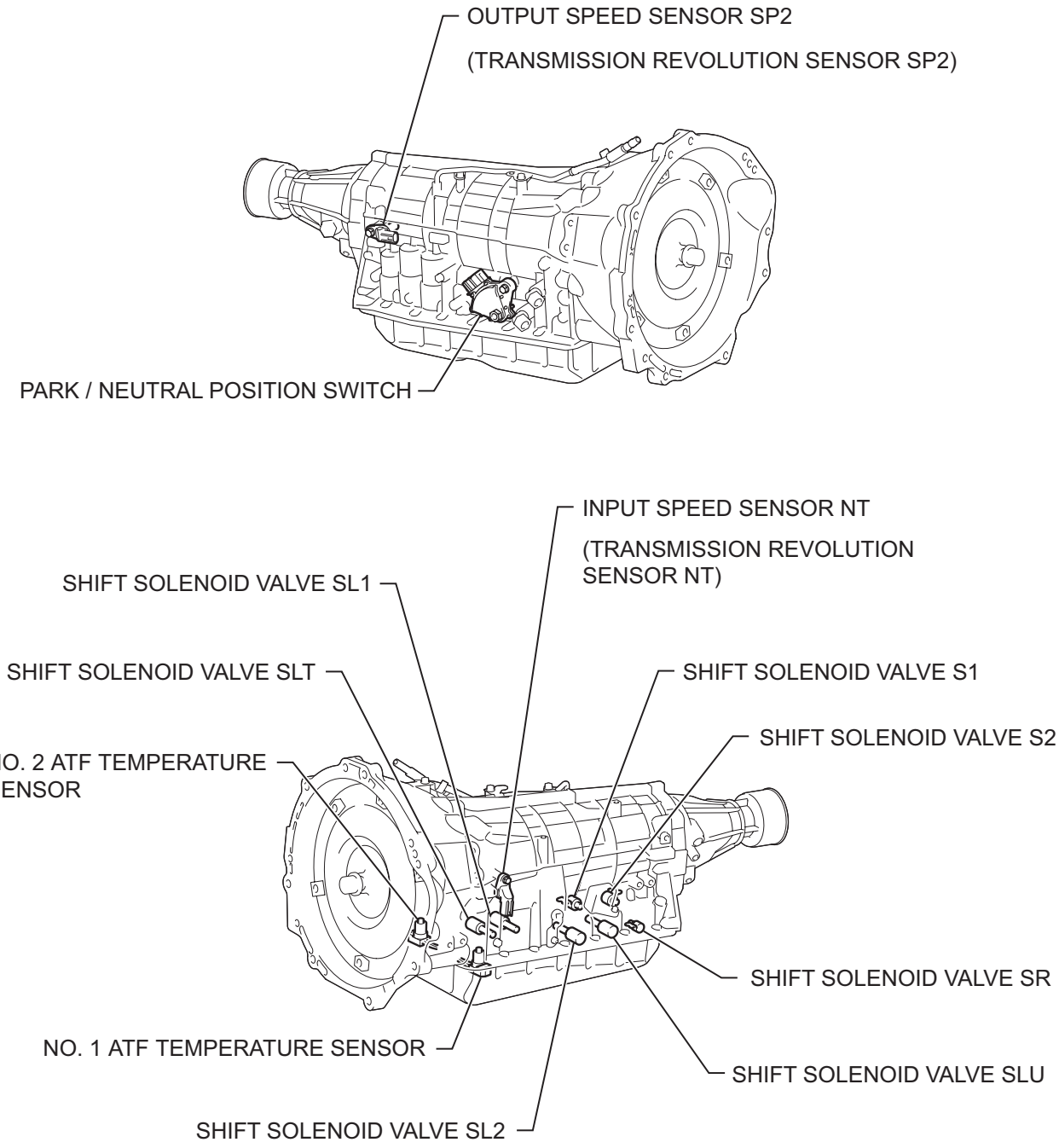

AT

P

C130130E02

SYSTEM DIAGRAM

The configuration of the electronic control system in the A750E automatic transmission is as shown in the following chart.

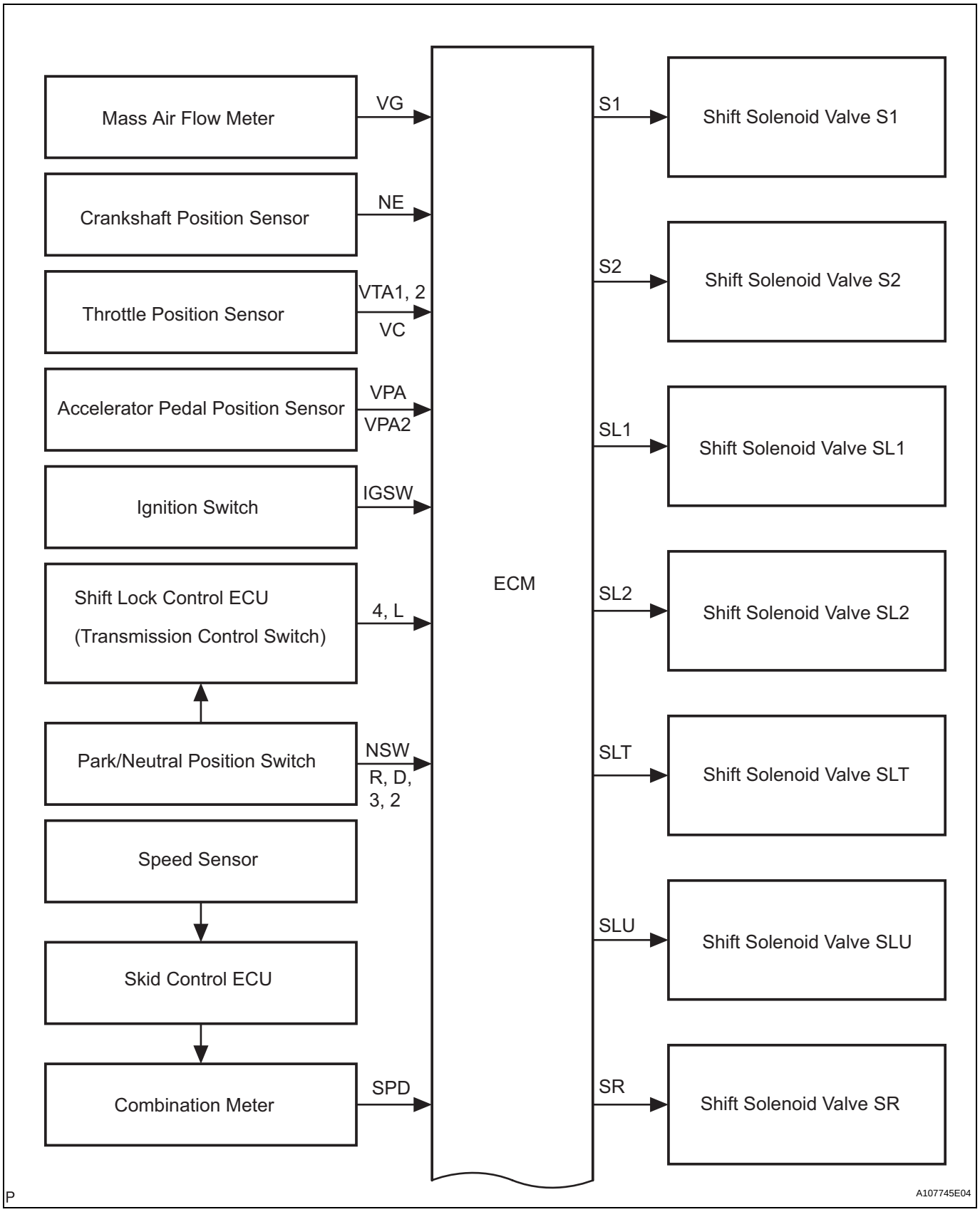

AT

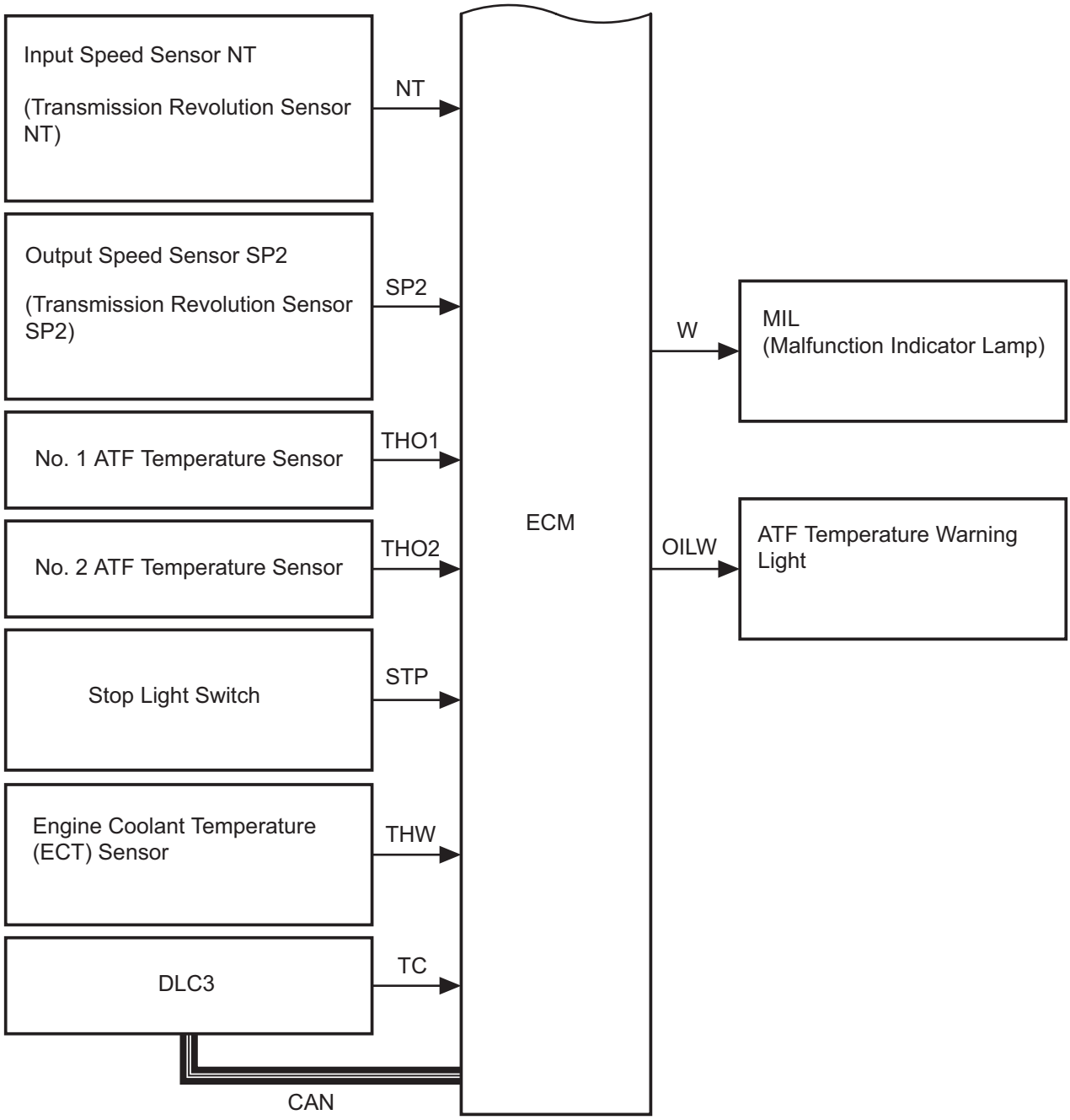

A111865E02

AT

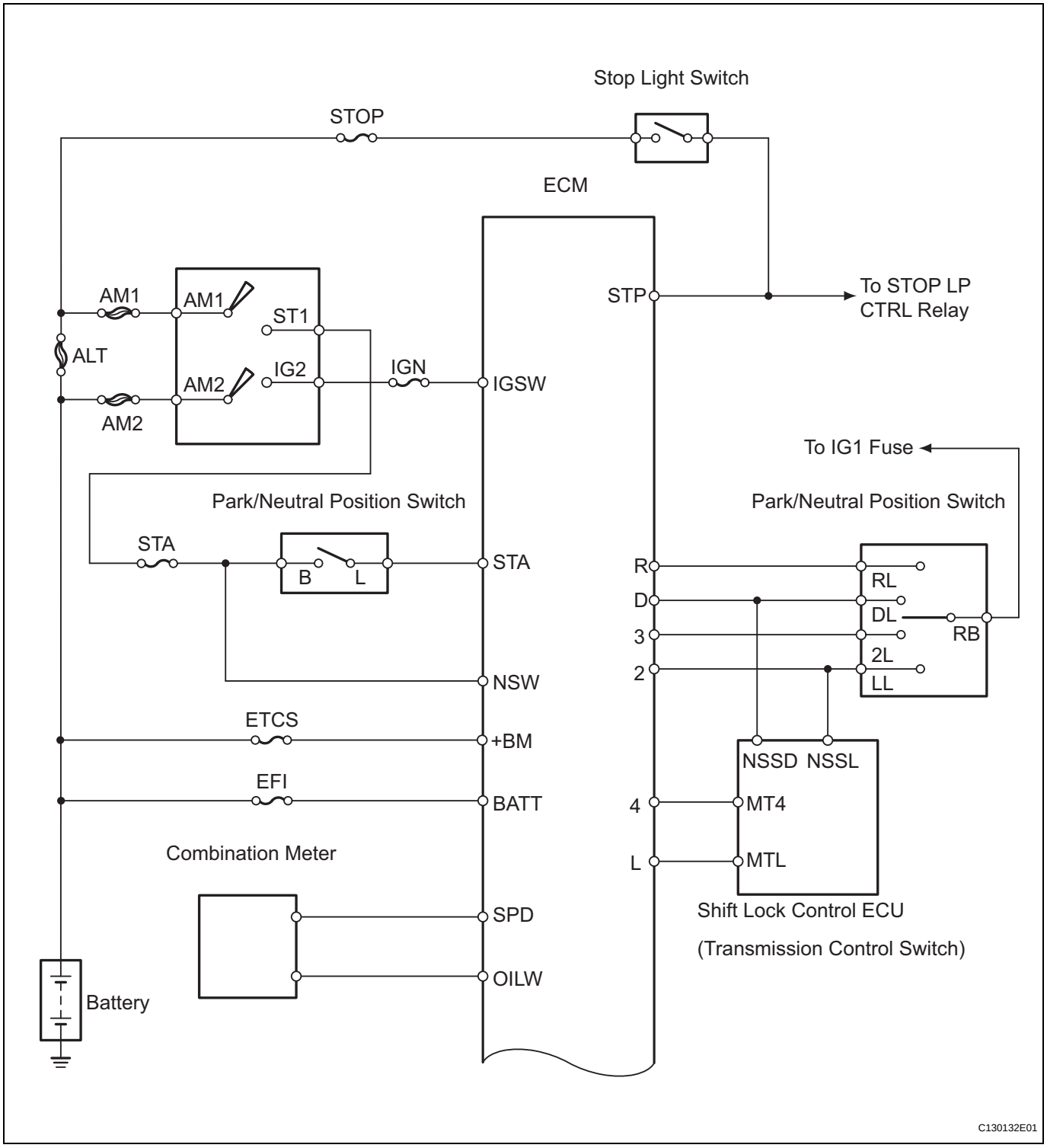
Stop Light Switch
STOP
ECM
AM1
AM1
ST1
ALT
AM2
IG2
IGN
IGSW
AM2
STP
To STOP LP
CTRL Relay
To IG1 Fuse
Park/Neutral Position Switch
Park/Neutral Position Switch
STA
B
L
STA
R
D
3
2
RL
DL
RB
2L
LL
NSW
ETCS
+BM
NSSD NSSL
EFI
BATT
4
MT4
Combination Meter
L
MTL
Shift Lock Control ECU
(Transmission Control Switch)
SPD
OILW
Battery
C130132E01

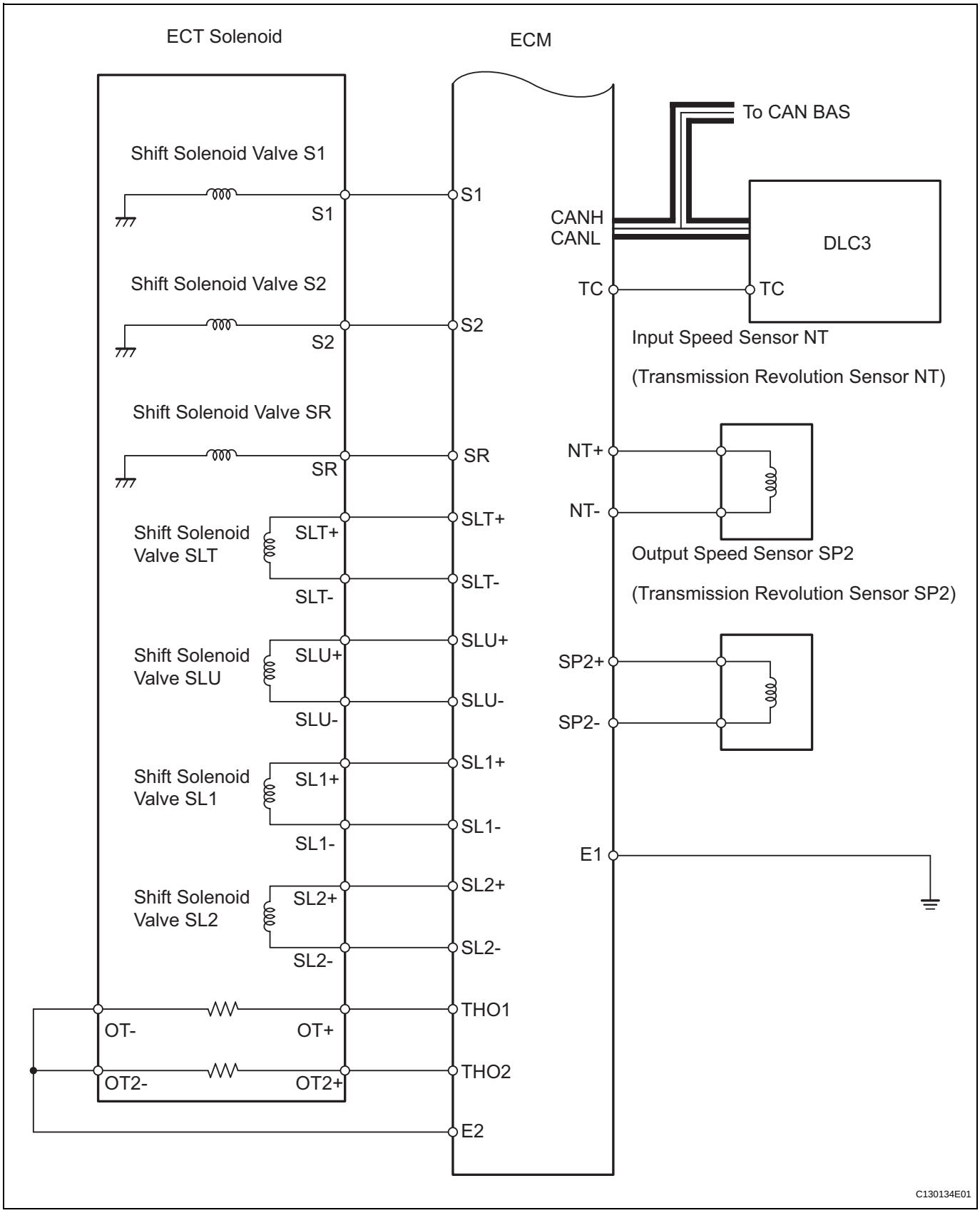
ECT Solenoid
ECM
Shift Solenoid Valve S1
S1
S1
Shift Solenoid Valve S2
S2
S2
Shift Solenoid Valve SR
SR
SR
Shift Solenoid Valve SLT
SLT+
SLT-
SLT+
SLT-
Shift Solenoid Valve SLU
SLU+
SLU-
SLU+
SLU-
Shift Solenoid Valve SL1
SL1+
SL1-
SL1+
SL1-
Shift Solenoid Valve SL2
SL2+
SL2-
SL2+
SL2-
OT-
OT+
THO1
OT2-
OT2+
THO2
E2
To CAN BAS
CANH
CANL
DLC3
TC
TC
Input Speed Sensor NT
(Transmission Revolution Sensor NT)
NT+
NT-
Output Speed Sensor SP2
(Transmission Revolution Sensor SP2)
SP2+
SP2-
E1
C130134E01

AT

SYSTEM DESCRIPTION

1. SYSTEM DESCRIPTION

(a) The ECT (Electronic controlled automatic transmission) is an automatic transmission that electronically controls shift timing using the ECM. The ECM detects electrical signals that indicate engine and driving conditions, and controls the shift point, based on driver habits and road conditions. As a result, fuel efficiency and power transmission performance are improved.
Shift shock has been reduced by controlling the engine and transmission simultaneously.
In addition, the ECT has features such as follows:
- Diagnostic function.
- Fail-safe function when a malfunction occurs.

HOW TO PROCEED WITH TROUBLESHOOTING

HINT:

- The ECM of this system is connected to the CAN communication system. Therefore, before starting troubleshooting, make sure that there is no trouble in the CAN communication system.
- *: Use the intelligent tester.

1	VEHICLE BROUGHT TO WORKSHOP

NEXT

2	CUSTOMER PROBLEM ANALYSIS

NEXT

3	CONNECT INTELLIGENT TESTER TO DLC3 *

NEXT

4	CHECK AND CLEAR DTCS AND FREEZE FRAME DATA *

Refer to the DTC CHECK / CLEAR (See page AT-33).

NEXT

AT

5	VISUAL INSPECTION

NEXT

6	SETTING CHECK MODE DIAGNOSIS *

Refer to the CHECK MODE PROCEDURE (See page AT-33).

NEXT

7	PROBLEM SYMPTOM CONFIRMATION

Refer to the ROAD TEST (See page AT-13).

Result

Result	Proceed to
Symptom does not occur	A
Symptom occurs	B

B → GO TO STEP 9

A

8	SYMPTOM SIMULATION

Refer to the ELECTRONIC CIRCUIT INSPECTION PROCEDURE (See page IN-44).

NEXT

9	DTC CHECK *

Refer to the DTC CHECK / CLEAR (See page AT-33).

Result

Result	Proceed to
DTC is not output	A
DTC is output	B

B → GO TO STEP 17

A

10	BASIC INSPECTION

Refer to the AUTOMATIC TRANSMISSION FLUID (See page AT-140).
Refer to the PARK/NEUTRAL POSITION SWITCH (See page AT-154).
Refer to the FLOOR SHIFT ASSEMBLY (See page AT-166).

NG → GO TO STEP 19

OK

11	MECHANICAL SYSTEM TEST

Refer to the MECHANICAL SYSTEM TEST (See page AT-16).

NG → GO TO STEP 16

OK

12	HYDRAULIC TEST

Refer to the HYDRAULIC TEST (See page AT-18).

NG → GO TO STEP 16

OK

13	MANUAL SHIFTING TEST

Refer to the MANUAL SHIFTING TEST (See page AT-19).

NG → GO TO STEP 15

OK

14	PROBLEM SYMPTOMS TABLE CHAPTER 1

Refer to the PROBLEM SYMPTOMS TABLE (See page AT-22).

NG → GO TO STEP 18

OK

15	PROBLEM SYMPTOMS TABLE CHAPTER 2

Refer to the PROBLEM SYMPTOMS TABLE (See page AT-22).

NEXT

16	PART INSPECTION

NEXT → GO TO STEP 19

AT

17	DTC CHART

Refer to the DIAGNOSTIC TROUBLE CODE CHART (See page AT-40).

NEXT

18	CIRCUIT INSPECTION

NEXT

19	REPAIR OR REPLACE

NEXT

20	CONFIRMATION TEST

NEXT

END

ROAD TEST

1. PROBLEM SYMPTOM CONFIRMATION

(a) Based on the result of the customer problem analysis, try to reproduce the symptoms. If the problem is that the transmission does not shift up, shift down, or the shift point is too high or too low, conduct the following road test while referring to the automatic shift schedule and simulate the problem symptoms.

2. ROAD TEST

NOTICE:

Perform the test at the normal operating ATF (Automatic Transmission Fluid) temperature: 50° to 80°C (122° to 176°F).

(a) D position test:

Shift into the D position, fully depress the accelerator pedal and check the following points.

(1) Check up-shift operation.

Check that 1 → 2, 2 → 3, 3 → 4 and 4 → 5th up-shifts take place, and that the shift points conform to the automatic shift schedule (See page SS-21).

HINT:

5th Gear Up-shift Prohibition Control

- Engine coolant temperature is 55°C (131°F) or less and vehicle speed is 32 mph (51 km/h) or less.

4th Gear Up-shift Prohibition Control

- Engine coolant temperature is 47°C (116.6°F) or less and vehicle speed is 30.4 mph (49 km/h) or less.

5th Gear Lock-up Prohibition Control

- Brake pedal is depressed.
- Accelerator pedal is released.
- Engine coolant temperature is 60°C (140°F) or less.

(2) Check for shift shock and slippage

Check for shock and slippage at the 1 → 2, 2 → 3, 3 → 4 and 4 → 5th up-shifts.

(3) Check for abnormal noise and vibration.

Check for abnormal noise and vibration when up-shifting from 1 → 2, 2 → 3, 3 → 4 and 4 → 5 while driving with the shift lever in the D position, and check while driving in the lock-up condition.

HINT:

The check for the cause of abnormal noise and vibration must be done thoroughly as it could also be due to loss of balance in the differential, torque converter clutch, etc.

AT

(4) Check kick-down operation.
Check vehicle speeds when the 2 → 1, 3 → 2, 4 → 3, and 5 → 4 kick-downs take place while driving with the shift lever in the D position. Confirm that each speed is within the applicable vehicle speed range indicated in the automatic shift schedule (See page SS-21).

(5) Check for abnormal shock and slippage at kick-down.

(6) Check the lock-up mechanism.
- Drive in the D position (5th gear), at a steady speed (lock-up ON).
- Lightly depress the accelerator pedal and check that the engine speed does not change abruptly.

HINT:
If there is a sudden increase in engine speed, there is no lock-up.

(b) 4 position test:
Shift into the 4 position, fully depress the accelerator pedal and check the following points.

(1) Check up-shift operation.
Check that the 1 → 2, 2 → 3 and 3 → 4 up-shifts take place and that the shift points conform to the automatic shift schedule (See page SS-21).
HINT:
- There is no 5th up-shift in the 4 position.
- 4th Gear Lock-up Prohibition Control
- Brake pedal is depressed.
- Accelerator pedal is released.
- Engine coolant temperature is 60°C (140°F) or less.

(2) Check engine braking.
While driving in the 4 position and 4th gear, release the accelerator pedal and check the engine braking effect.

(3) Check for abnormal noises during acceleration and deceleration, and for shock at up-shift and down-shift.

(4) Check the lock-up mechanism.
- Drive in the 4 position and 4th gear, at a steady speed (lock-up ON).
- Lightly depress the accelerator pedal and check that the engine speed does not change abruptly.

HINT:
If there is a sudden increase in engine speed, there is no lock-up.

(c) 3 position test:
Shift into the 3 position, fully depress the accelerator pedal and check the following points.
(1) Check up-shift operation.
Check that the 1 → 2 and 2 → 3 up-shifts take place and that the shift points conform to the automatic shift schedule (See page SS-21).
HINT:
There is no 4th up-shift and lock-up in the 3 position.
(2) Check engine braking.
While running in the 3 position and 3rd gear, release the accelerator pedal and check the engine braking effect.
(3) Check for abnormal noises during acceleration and deceleration, and for shock at up-shift and down-shift.

(d) 2 position test:
Shift into the 2 position, fully depress the accelerator pedal and check the following points.
(1) Check up-shift operation.
Check that the 1 → 2 up-shift takes place and that the shift point conforms to the automatic shift schedule (See page SS-21).
HINT:
There is no 3rd up-shift and lock-up in the 2 position.
(2) Check engine braking.
While running in the 2 position and 2nd gear, release the accelerator pedal and check the engine braking effect.
(3) Check for abnormal noises during acceleration and deceleration, and for shock at up-shift and down-shift.

(e) L position test:
Shift into the L position and fully depress the accelerator pedal and check the following points.
(1) Check no up-shift.
While running in the L position, check that there is no up-shift to 2nd gear.
(2) Check engine braking.
While running in the L position, release the accelerator pedal and check the engine braking effect.
(3) Check for abnormal noises during acceleration and deceleration.

(f) R position test:
Shift into the R position, lightly depress the accelerator pedal, and check that the vehicle moves backward without any abnormal noise or vibration.
CAUTION:
Before conducting this test, ensure that the test area is free from people and obstructions.

(g) P position test:
Stop the vehicle on a grade (more than 5°) and after shifting into the P position, release the parking brake. Then, check that the parking lock pawl holds the vehicle in place.

MECHANICAL SYSTEM TESTS

1. STALL SPEED TEST

HINT:

This test is to check the overall performance of the engine and transmission.

NOTICE:

- **Do not perform the stall speed test for longer than 5 seconds.**
- **To ensure safety, perform this test in an open and level area that provides good traction.**
- **The stall speed test should always be performed by at least 2 people. One person should observe the condition of the wheels and wheel chocks while the other is performing the test.**

(a) Connect the intelligent tester to the CAN VIM. Then connect the CAN VIM to the DLC3.

(b) Run the vehicle until the transmission fluid temperature has reached 50 to 80°C (122 to 176°F).

(c) Allow the engine to idle with the air conditioning OFF.

(d) Chock all 4 wheels.

(e) Set the parking brake and keep the brake pedal depressed firmly with your left foot.

(f) Shift the shift lever into the drive position.

(g) Depress the accelerator pedal as much as possible with your right foot.

(h) Read the engine rpm (stall speed) and release the accelerator pedal immediately.

Standard value:

2,250 to 2,550 rpm

Evaluation:

AT

Test Result	Possible Cause
Stall speed is lower than standard value	• Stator one-way clutch is not operating properly • Torque converter is faulty (stall speed is less than standard value by 600 rpm or more) • Engine power may be insufficient
Stall speed is higher than standard value	• Line pressure is low • No. 1 clutch (C1) slipping • No. 3 one-way clutch (F3) is not operating properly • Improper fluid level

2. SHIFT TIME LAG TEST

HINT:

This test is to check the condition of the direct clutch, forward clutch, 1st brake and reverse brake.

(a) Connect the intelligent tester to the CAN VIM. Then connect the CAN VIM to the DLC3.

(b) Run the vehicle until the transmission fluid temperature has reached 50 to 80°C (122 to 176°F).

(c) Allow the engine to idle with the air conditioning OFF.

(d) Set the parking brake and keep the brake pedal depressed firmly.

(e) Check the D range time lag.
(1) Shift the shift lever into the N position and wait for 1 minute.
(2) Shift the shift lever into the D position and measure the time until the shock is felt.
(3) Repeat the 2 procedures above 3 times, and calculate the average time of the 3 tests.

(f) Check the R range time lag.
(1) Shift the shift lever into the N position and wait for 1 minute.
(2) Shift the shift lever into the R position and measure the time until the shock is felt.
(3) Repeat the 2 procedures above 3 times, and calculate the average time of the 3 tests.
Standard value:
D range time lag is less than 1.2 seconds
R range time lag is less than 1.5 seconds

Evaluation:

Test Result	Possible Cause
D range time lag exceeds standard value	• Line pressure is low • No. 1 clutch (C1) is worn • No. 3 one-way clutch (F3) is not operating properly
R range time lag exceeds standard value	• Line pressure is low • No. 3 clutch (C3) is worn • No. 4 brake (B4) is worn • No. 1 one-way clutch (F1) is not operating properly

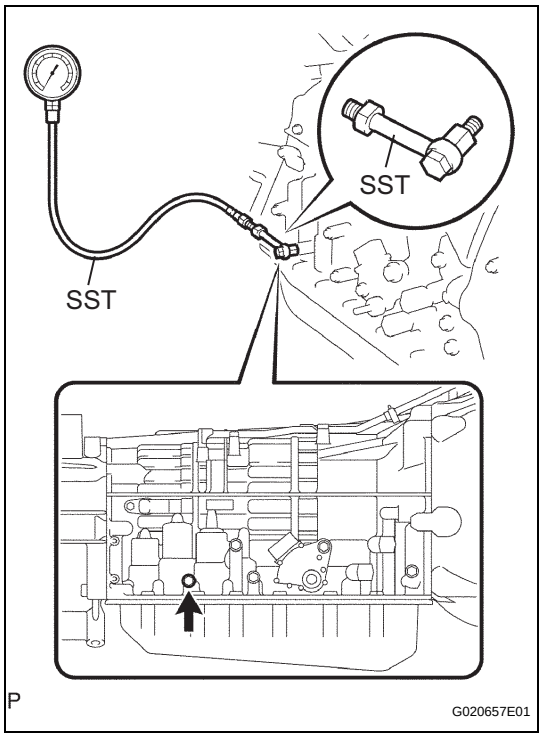

HYDRAULIC TEST

1. PERFORM HYDRAULIC TEST

(a) Measure the line pressure.
NOTICE:
- **Perform the test at the normal operating ATF (Automatic Transmission Fluid) temperature of 50° to 80°C (122° to 176°F).**
- **The line pressure test should always be carried out in pairs. One technician should observe the condition of the wheels or wheel stoppers outside the vehicle while the other is doing the test.**
- **Be careful to prevent the SST hose from interfering with the exhaust pipe.**
- **This check must be conducted after checking and adjusting the engine.**
- **Perform with the A/C OFF.**
- **Do not conduct stall tests for longer than 5 seconds continuously.**

(1) Warm up the ATF.
(2) Lift the vehicle up.
(3) Remove the test plug on the transmission case center right side and connect SST.
SST 09992-00095 (09992-00151, 09992-00271)
(4) Fully apply the parking brake and chock the 4 wheels.
(5) Start the engine and check the idling speed.

AT

(6) Keep your left foot pressing firmly on the brake pedal and shift into the D position.
(7) Measure the line pressure while the engine is idling.
(8) Depress the accelerator pedal all the way down. Quickly read the highest line pressure when the engine speed reaches the stall speed.
(9) In the same manner, do the test in the R position.

Specified line pressure

Condition	D position	R position
Idling	**356 to 426 kPa (3.6 to 4.3 kgf/cm^2 , 52 to 62 psi)**	**500 to 600 kPa (5.1 to 6.1 kgf/cm^2, 73 to 87 psi)**
Stall test	**1,367 to 1,477 kPa (14.0 to 15.1 kgf/cm^2, 198 to 214 psi)**	**1,278 to 1,506 kPa (13.0 to 15.4 kgf/cm^2, 185 to 218 psi)**

Evaluation:

Problem	Possible cause
Measured values are higher than specified in all positions	• Shift solenoid valve SLT defective • Regulator valve defective
Measured values are lower than specified in all positions	• Shift solenoid valve SLT defective • Regulator valve defective • Oil pump defective
Pressure is low in D position only	• D position circuit fluid leakage • No. 1 clutch (C_1) defective
Pressure is low in R position only	• R position circuit fluid leakage • No. 3 clutch (C_3) defective • No. 4 brake (B_4) defective

MANUAL SHIFTING TEST

1. MANUAL SHIFTING TEST

HINT:

- Through this test, it can be determined whether the trouble occurs in the electrical circuit or if it is a mechanical problem in the transmission.
- If any abnormalities are found in the following test, the problem is in the transmission itself.

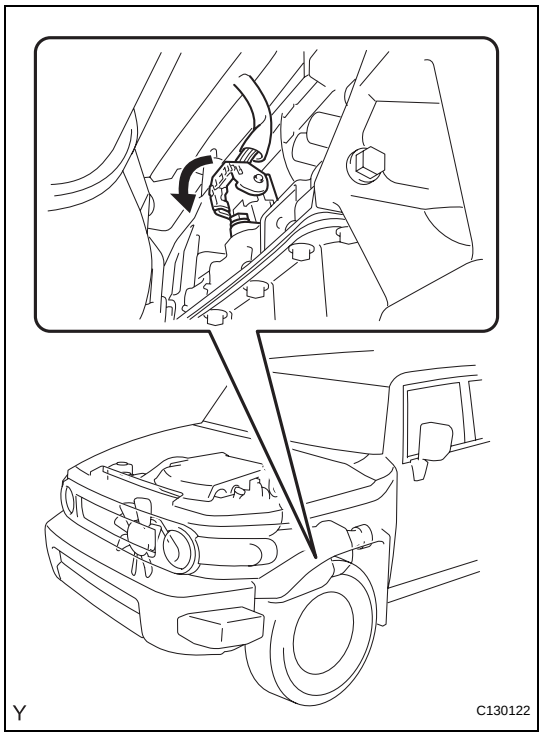

(a) Disconnect the connector of the transmission wire.
HINT:
It is possible to deactivate the electrical shift control by disconnecting the transmission wire. The gear positions can then be changed mechanically with the shift lever.

(b) Drive with the transmission wire disconnected. Shift the shift lever to each position to check whether the gear position changes as shown in the table below.

Shift Lever Position	Gear Position
D	4th
4	4th
3	3rd
2	1st
L	1st
R	R
P	P

(c) Connect the connector of the transmission wire.

(d) Clear the DTC (See page AT-33).

AT

INITIALIZATION

1. RESET MEMORY

CAUTION:

Perform the RESET MEMORY (AT initialization) when replacing the automatic transmission assembly, engine assembly or ECM.

NOTICE:

Intelligent tester only

HINT:

The ECM stores the conditions under which the ECT (Electronic Controlled Automatic Transmission) controls the automatic transmission and engine assemblies according to their characteristics. Therefore, when the automatic transmission assembly, engine assembly, or ECM has been replaced, it is necessary to reset the memory so that the ECM can store the new information. Reset procedure is as follows.

(a) Turn the ignition switch off.

(b) Connect the intelligent tester together with the CAN VIN (controller area network vehicle interface module) to the DLC3.

(c) Turn the ignition switch to the ON position and push the intelligent tester main switch on.

(d) Select the items "DIAGNOSIS / ENHANCED OBD II".

(e) Perform the reset memory procedure from the ENGINE menu.

CAUTION:

After performing the RESET MEMORY, be sure to perform the ROAD TEST (See page AT-13) described earlier.

HINT:

The ECM stores the new information during the ROAD TEST.

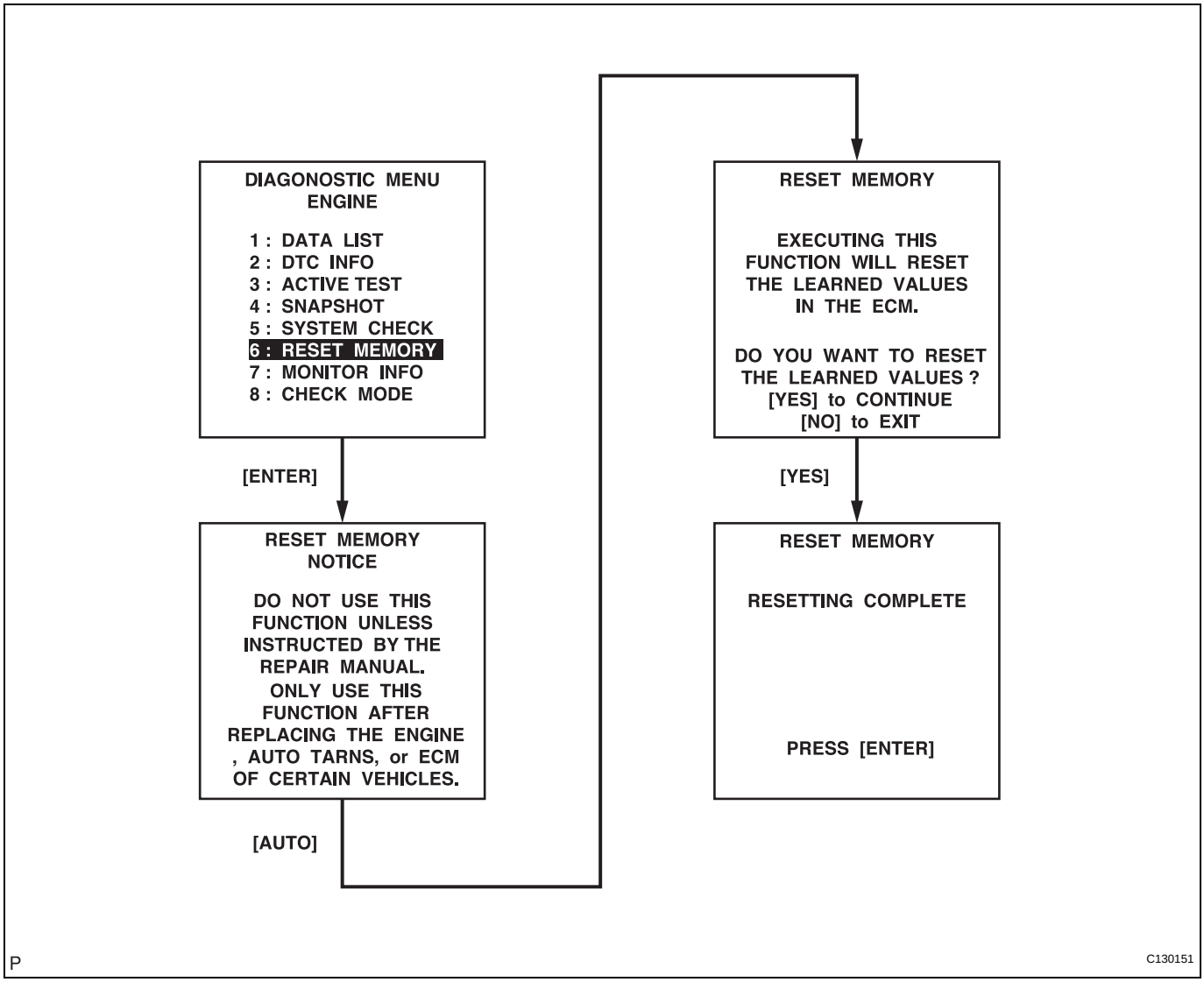
DIAGONOSTIC MENU
ENGINE
1 : DATA LIST
2 : DTC INFO
3 : ACTIVE TEST
4 : SNAPSHOT
5 : SYSTEM CHECK
6 : RESET MEMORY
7 : MONITOR INFO
8 : CHECK MODE
[ENTER]
RESET MEMORY
NOTICE
DO NOT USE THIS FUNCTION UNLESS INSTRUCTED BY THE REPAIR MANUAL.
ONLY USE THIS FUNCTION AFTER REPLACING THE ENGINE , AUTO TARNS, or ECM OF CERTAIN VEHICLES.
[AUTO]
RESET MEMORY
EXECUTING THIS FUNCTION WILL RESET THE LEARNED VALUES IN THE ECM.
DO YOU WANT TO RESET THE LEARNED VALUES ?
[YES] to CONTINUE
[NO] to EXIT
[YES]
RESET MEMORY
RESETTING COMPLETE
PRESS [ENTER]
P
C130151

MONITOR DRIVE PATTERN

1. MONITOR DRIVE PATTERN FOR ECT TEST

(a) Perform this drive pattern as one method to simulate the detection conditions of the ECT (Electronic Controlled Automatic Transmission) malfunctions.
(The DTCs may not be detected due to the actual driving conditions. And some DTCs may not be detected through this drive pattern.)
HINT:
Preparation for driving

- Warm up the engine sufficiently. (Engine coolant temperature should be 60°C (140°F) or higher)
- Drive the vehicle when the atmospheric temperature is -10°C (14°F) or higher. (Malfunction is not detected when the atmospheric temperature is less than -10°C (14°F))

Notice in driving

- Drive the vehicle through all gears. Stop → 1st → 2nd → 3rd → 4th → 5th → 5th (lock-up ON).
- Repeat the above driving pattern three times or more.

NOTICE:

- **The monitor status can be checked using the intelligent tester. When using the intelligent tester, monitor status can be found in the "ENHANCED OBD II / DATA LIST" or under "CARB OBD II".**
- **In the event that the drive pattern must be interrupted (possibly due to traffic conditions or other factors), the drive pattern can be resumed and, in most cases, the monitor can be completed.**

CAUTION:

Perform this drive pattern on as level a road as possible and strictly observe the posted speed limits and traffic laws while driving.

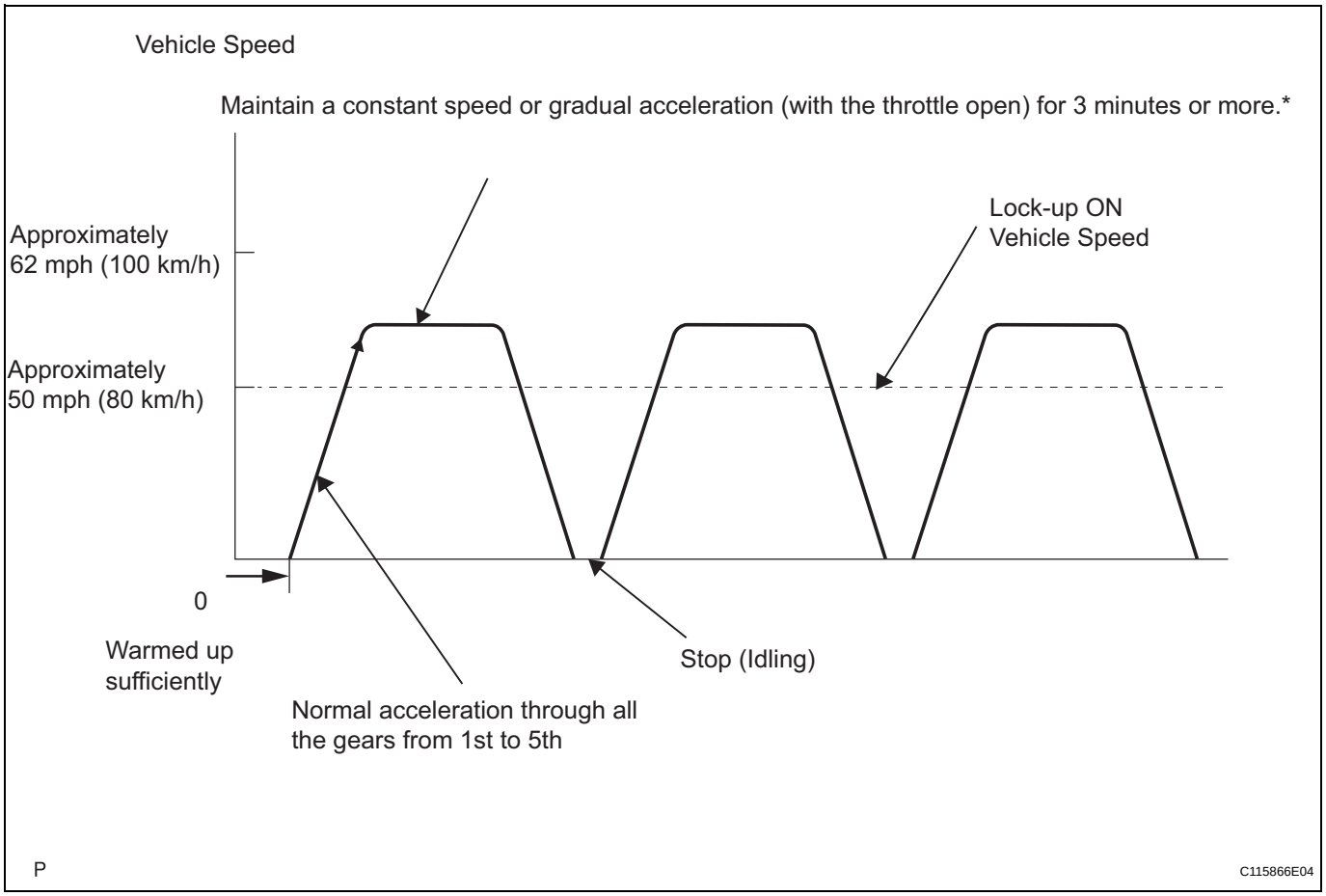

HINT:
*: Drive at such a speed in the uppermost gear, as to engage lock-up. The vehicle can be driven at a speed lower than that in the above diagram under the lock-up condition.

NOTICE:
It is necessary to drive the vehicle for approximately 30 minutes to detect DTC P0711 (ATF temperature sensor malfunction).

AT

PROBLEM SYMPTOMS TABLE

HINT:

- If no DTCs are displayed during the diagnostic trouble code check although the trouble still occurs, check the electrical circuits for each symptom in the order given in the charts on the following pages and proceed to the page given for troubleshooting.
- The Matrix Chart is divided into 2 chapters.
- *1: Denotes that when there are malfunctions in the circuit, DTCs may be set.

Chapter 1: Electronic Circuit Matrix Chart

Refer to the table below when the cause of the trouble is considered to be electrical.
If the trouble still occurs even though there are no abnormalities in any of the other circuits, check and replace the ECM.

Symptom	Suspected area	See page
No up-shift (A particular gear, from 1st to 4th gear, is not up-shifted)	1. Shift solenoid valve (S1) circuit *1	AT-103
	2. Shift solenoid valve (S2) circuit *1	AT-107
	3. ECM	IN-44
No up-shift (4th to 5th)	1. Transmission control switch circuit (D - 4) *1	AT-45
	2. Engine coolant temperature sensor circuit *1	ES-57
	3. Speed sensor NT circuit *1	AT-59
	4. Shift solenoid valve (SL1) circuit *1	AT-69
	5. Shift solenoid valve (SL2) circuit *1	AT-94
	6. Shift solenoid valve (SR) circuit *1	AT-111
	7. ECM	IN-44
No up-shift (3rd to 4th)	1. Engine coolant temperature sensor circuit *1	ES-57
	2. Shift solenoid valve (S2) circuit *1	AT-107
	3. ECM	IN-44
No up-shift (1st to 2nd)	1. Transmission control switch circuit (2 - L) *1	AT-45
	2. Shift solenoid valve (S2) circuit *1	AT-107
	3. ECM	IN-44
No down-shift (5th to 4th)	1. Transmission control switch circuit (D - 4) *1	AT-45
	2. Shift solenoid valve (SL1) circuit *1	AT-69
	3. Shift solenoid valve (SL2) circuit *1	AT-94
	4. Shift solenoid valve (SR) circuit *1	AT-111
	5. ECM	IN-44
No down-shift (2nd to 1st)	1. Transmission control switch circuit (2 - L) *1	AT-45
	2. Shift solenoid valve (S2) circuit *1	AT-107
	3. ECM	IN-44
No down-shift (A particular gear, from 1st to 4th gear, is not down-shifted)	1. Shift solenoid valve (S1) circuit *1	AT-103
	2. Shift solenoid valve (S2) circuit *1	AT-107
	3. ECM	IN-44
No lock-up	1. No. 1 ATF temperature sensor circuit *1	AT-51
	2. Stop light switch circuit *1	ES-57
	3. Speed sensor NT circuit *1	AT-59
	4. Shift solenoid valve (SLU) circuit *1	AT-136
	5. Engine coolant temperature sensor circuit *1	ES-57
	6. ECM	IN-44
No lock-up off	1. Shift solenoid valve (SLU) circuit *1	AT-136
	2. ECM	IN-44

Symptom	Suspected area	See page
Shift point too high or too low	1. Shift solenoid valve (SLT) circuit *1	AT-122
	2. Speed sensor NT circuit *1	AT-59
	3. Speed sensor SP2 circuit *1	AT-64
	4. Throttle position sensor circuit *1	ES-57
	5. No. 1 ATF temperature sensor circuit *1	AT-51
	6. ECM	IN-44
Up-shift from 4th to 5th while shift lever is in 4 position	1. Transmission control switch circuit (D - 4) *1	AT-45
	2. ECM	IN-44
Up-shift from 4th to 5th while engine is cold	1. Engine coolant temperature sensor circuit *1	ES-57
	2. ECM	IN-44
Up-shift from 3rd to 4th while shift lever is in 3 position	1. Park/neutral position switch circuit *1	AT-45
	2. ECM	IN-44
Up-shift from 2nd to 3rd while shift lever is in 2 position	1. Park/neutral position switch circuit *1	AT-45
	2. ECM	IN-44
Up-shift from 1st to 2nd while shift lever is in L position	1. Transmission control switch circuit (2 - L) *1	AT-45
	2. ECM	IN-44
Harsh engagement (N to D)	1. Speed sensor NT circuit *1	AT-59
	2. Shift solenoid valve (SL1) circuit *1	AT-69
	3. Shift solenoid valve (SLT) circuit *1	AT-122
	4. ECM	IN-44
Harsh engagement (Lock-up)	1. Speed sensor NT circuit *1	AT-59
	2. Speed sensor SP2 circuit *1	AT-64
	3. Shift solenoid valve (SLU) circuit *1	AT-136
	4. ECM	IN-44
Harsh engagement (Any driving position)	ECM	IN-44
Poor acceleration	1. No. 2 ATF temperature sensor circuit *1	AT-126
	2. Engine coolant temperature sensor circuit *1	ES-57
	3. Shift solenoid valve (SLT) circuit *1	AT-122
	4. ECM	IN-44
No engine braking	ECM	IN-44
No kick-down	ECM	IN-44
Engine stalls when starting off or stopping	1. Shift solenoid valve (SLU) circuit *1	AT-136
	2. ECM	IN-44
ATF temperature warning light remains on	1. No. 2 ATF temperature sensor circuit *1	AT-126
	2. Engine coolant temperature sensor circuit *1	ES-57
	3. ECM	IN-44
Lock-up at 3rd gear	1. No. 2 ATF temperature sensor circuit *1	AT-126
	2. Engine coolant temperature sensor circuit *1	ES-57
	3. ECM	IN-44
Shift point too high	1. No. 2 ATF temperature sensor circuit *1	AT-126
	2. Engine coolant temperature sensor circuit *1	ES-57
	3. ECM	IN-44

Chapter 2: On-Vehicle Repair and Off-Vehicle Repair

Symptom	Suspected area	See page
Vehicle does not move with shift lever in any forward position and reverse position	1. Transmission control cable	AT-181
	2. Manual valve	AT-186
	3. Parking lock pawl	AT-186
	4. Rear planetary gear unit	AT-186
	5. Torque converter clutch	AT-179

Symptom	Suspected area	See page
Vehicle does not move with shift lever in R position	1. Valve body assembly	AT-156
	2. No. 3 clutch (C3)	AT-186
	3. No. 4 brake (B4)	AT-186
	4. No. 1 one-way clutch (F1)	AT-186
No up-shift (1st to 2nd)	1. Valve body assembly	AT-156
	2. No. 3 brake (B3)	AT-186
	3. No. 1 one-way clutch (F1)	AT-186
	4. No. 2 one-way clutch (F2)	AT-186
No up-shift (2nd to 3rd)	1. Valve body assembly	AT-156
	2. No. 3 clutch (C3)	AT-186
No up-shift (3rd to 4th)	1. Valve body assembly	AT-156
	2. No. 2 clutch (C2)	AT-186
No up-shift (4th to 5th)	1. Valve body assembly	AT-156
	2. No. 1 brake (B1)	AT-186
	3. No. 1 clutch (C1)	AT-186
No down-shift (5th to 4th)	Valve body assembly	AT-156
No down-shift (4th to 3rd)	Valve body assembly	AT-156
No down-shift (3rd to 2nd)	Valve body assembly	AT-156
No down-shift (2nd to 1st)	Valve body assembly	AT-156
No lock-up or No lock-up off	1. Shift solenoid valve (SLU)	AT-131
	2. Valve body assembly	AT-156
	3. Torque converter clutch	AT-179
Harsh engagement (N to D)	1. Shift solenoid valve (SL1)	AT-84
	2. Valve body assembly	AT-156
	3. C1 accumulator	AT-186
	4. No. 1 clutch (C1)	AT-186
	5. No. 3 one-way clutch (F3)	AT-186
Harsh engagement (Lock-up)	1. Shift solenoid valve (SLU)	AT-131
	2. Valve body assembly	AT-156
	3. Torque converter clutch	AT-179
Harsh engagement (N to R)	1. Shift solenoid valve (SLT)	AT-115
	2. Shift solenoid valve (SLU)	AT-131
	3. Valve body assembly	AT-156
	4. C3 accumulator	AT-186
	5. No. 3 clutch (C3)	AT-186
	6. No. 4 brake (B4)	AT-186
	7. No. 1 one-way clutch (F1)	AT-186
Harsh engagement (1st to 2nd, 2nd to 3rd, 3rd to 4th and 4th to 5th)	1. Shift solenoid valve (SLT)	AT-115
	2. Shift solenoid valve (SL1)	AT-84
	3. Valve body assembly	AT-156
Harsh engagement (1st to 2nd)	1. Valve body assembly	AT-156
	2. B3 accumulator	AT-186
	3. No. 3 brake (B3)	AT-186
	4. No. 1 one-way clutch (F1)	AT-186
	5. No. 2 one-way clutch (F2)	AT-186
Harsh engagement (2nd to 3rd)	1. Valve body assembly	AT-156
	2. C3 accumulator	AT-186
	3. No. 3 clutch (C3)	AT-186

Symptom	Suspected area	See page
Harsh engagement (3rd to 4th)	1. Valve body assembly	AT-156
	2. C2 accumulator	AT-186
	3. No. 2 clutch (C2)	AT-186
Harsh engagement (4th to 5th)	1. Shift solenoid valve (SL1)	AT-84
	2. Shift solenoid valve (SL2)	AT-89
	3. Valve body assembly	AT-156
	4. No. 1 brake (B1)	AT-186
	5. No. 1 clutch (C1)	AT-186
Slippage or shuddering (Forward and reverse: After warm-up)	1. Valve body assembly	AT-156
	2. Oil strainer	AT-156
	3. No. 1 one-way clutch (F1)	AT-186
	4. No. 3 clutch (C3)	AT-186
	5. Torque converter clutch	AT-179
Slippage or shuddering (Particular position: Just after engine starts)	Torque converter clutch	AT-179
Slippage or shuddering (R position)	1. No. 4 brake (B4)	AT-186
	2. No. 1 one-way clutch (F1)	AT-186
	3. No. 3 clutch (C3)	AT-186
Slippage or shuddering (1st)	1. No. 1 clutch (C1)	AT-186
	2. No. 3 one-way clutch (F3)	AT-186
Slippage or shuddering (2nd)	1. No. 1 clutch (C1)	AT-186
	2. No. 3 brake (B3)	AT-186
	3. No. 1 one-way clutch (F1)	AT-186
	4. No. 2 one-way clutch (F2)	AT-186
Slippage or shuddering (3rd)	1. No. 1 clutch (C1)	AT-186
	2. No. 3 clutch (C3)	AT-186
	3. No. 1 one-way clutch (F1)	AT-186
Slippage or shuddering (4th)	1. No. 1 clutch (C1)	AT-186
	2. No. 2 clutch (C2)	AT-186
Slippage or shuddering (5th)	1. No. 2 clutch (C2)	AT-186
	2. No. 3 clutch (C3)	AT-186
	3. No. 1 brake (B1)	AT-186
Engine brake does not work only in 1st to 4th gear in D position	No. 1 clutch (C1)	AT-186
Engine brake does not work only in 1st gear in L position	1. Valve body assembly	AT-156
	2. No. 4 brake (B4)	AT-186
Engine brake does not work only in 2nd gear in 2 position	1. Valve body assembly	AT-156
	2. Brake No. 2 (B2)	AT-186
Engine brake does not work only in 3rd gear in 3 position	1. Valve body assembly	AT-156
	2. No. 1 brake (B1)	AT-186
No kick-down	Valve body assembly	AT-156
Shift point too high or too low	1. Shift solenoid valve (SLT)	AT-115
	2. Shift solenoid valve (SL1)	AT-84
	3. Valve body assembly	AT-156
Poor acceleration (All positions)	1. Shift solenoid valve (SLT)	AT-115
	2. Valve body assembly	AT-156
	3. Torque converter clutch	AT-179

Symptom	Suspected area	See page
Poor acceleration (5th)	1. No. 1 clutch (C1)	AT-186
	2. No. 3 clutch (C3)	AT-186
	3. No. 1 brake (B1)	AT-186
	4. Front planetary gear unit	AT-186
Engine stalls when starting off or stopping	1. Shift solenoid valve (SLU)	AT-131
	2. Valve body assembly	AT-156
	3. Torque converter clutch	AT-179

TERMINALS OF ECM

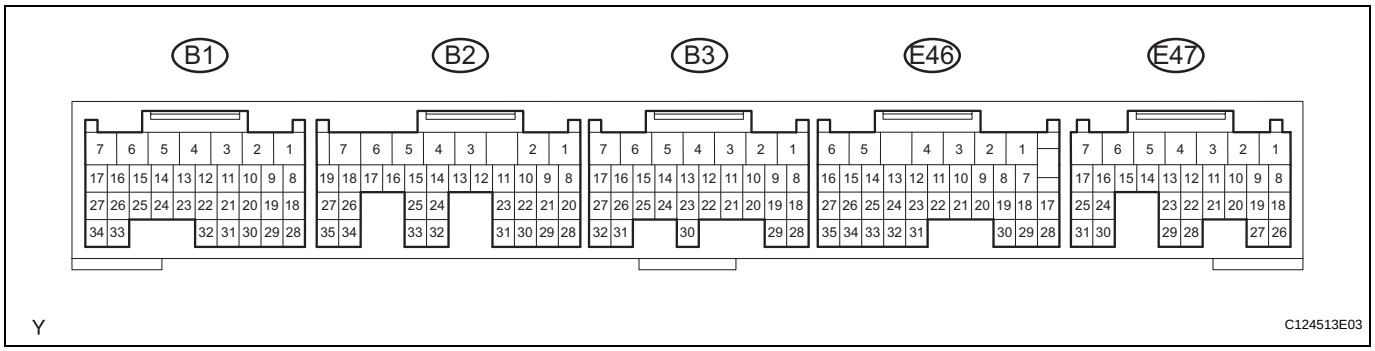

HINT:
The standard voltage of each ECM terminal is shown in the table below.
In the table, first follow the information under "Condition".
Look under "Symbols (Terminal No.)" for the terminals to be inspected. The standard voltage between the terminals is shown under "Specified Condition".
Use the illustration above as a reference for the ECM terminals.

Standard voltage

Symbols (Terminal No.)	Wiring Color	Terminal Description	Condition	Specified Condition
STP (E47-15) - E1 (B3-1)	G-Y - BR	Stop light switch signal	Brake pedal is depressed	7.5 to 14 V
			Brake pedal is released	Below 1.5 V
L (E46-9) - E1 (B3-1)	B-L - BR	L shift position switch signal	Ignition switch ON and shift lever L position	11 to 14 V
			Ignition switch ON and shift lever other than L position	Below 1 V
2 (E46-10) - E1 (B3-1)	G-R - BR	2 shift position switch signal	Ignition switch ON and shift lever 2 or L positions	11 to 14 V
			Ignition switch ON and shift lever other than 2 and L positions	Below 1 V
R (E46-11) - E1 (B3-1)	R-Y - BR	R shift position switch signal	Ignition switch ON and shift lever R position	11 to 14 V
			Ignition switch ON and shift lever other than R position	Below 1 V
3 (E46-19) - E1 (B3-1)	W-R - BR	3 shift position switch signal	Ignition switch ON and shift lever 3 position	11 to 14 V
			Ignition switch ON and shift lever other than 3 position	Below 1 V
4 (E46-20) - E1 (B3-1)	B-O - BR	4 shift position switch signal	Ignition switch ON and shift lever 4 position	11 to 14 V
			Ignition switch ON and shift lever other than 4 position	Below 1 V

Symbols (Terminal No.)	Wiring Color	Terminal Description	Condition	Specified Condition
D (E46-21) - E1 (B3-1)	V - BR	D shift position switch signal	Ignition switch ON and shift lever D or 4 positions	11 to 14 V
			Ignition switch ON and shift lever other than D and 4 positions	Below 1 V
NSW (B2-8) - E1 (B3-1)	L-Y - BR	Park or neutral shift position switch signal	Ignition switch ON and shift lever P or N positions	Below 2 V
			Ignition switch ON and shift lever other than P and N positions	11 to 14 V
SR (B2-9) - E1 (B3-1)	P-L - BR	SR solenoid signal	5th gear	11 to 14 V
			1st gear	Below 1 V
S2 (B2-10) - E1 (B3-1)	W-L - BR	S2 solenoid signal	2nd or 3rd gear	11 to 14 V
			1st, 4th or 5th gear	Below 1 V
S1 (B2-11) - E1 (B3-1)	GR - BR	S1 solenoid signal	1st or 2nd gear	11 to 14 V
			3rd, 4th or 5th gear	Below 1 V
SLT+ (B2-13) - SLT- (B2-12)	LG-B - L-R	SLT solenoid signal	Engine is idling	Pulse generation (See waveform 1)
SLU+ (B2-15) - SLU- (B2-14)	R-B - R-W	SLU solenoid signal	5th (lock-up) gear	Pulse generation (See waveform 2)
SL2+ (B2-17) - SL2- (B2-16)	B-W - B-R	SL2 solenoid signal	Engine idling speed	Pulse generation (See waveform 3)
SL1+ (B2-19) - SL1- (B2-18)	G-B - B-Y	SL1 solenoid signal	Engine idling speed	Pulse generation (See waveform 4)
THO2 (B2-32) - E2 (B1-28)	L - W-G	No. 2 ATF temperature sensor signal	ATF temperature: 115°C (239°F) or more	Below 1.5 V
THO1 (B2-24) - E2 (B1-28)	Y-G - W-G	No. 1 ATF temperature sensor signal	ATF temperature: 115°C (239°F) or more	Below 1.5 V
SP2+ (B2-34) - SP2- (B2-26)	Y - L	Speed sensor (SP2) signal	Vehicle speed 12 mph (20 km/h)	Pulse generation (See waveform 5)
NT+ (B2-35) - NT- (B2-27)	P - V	Speed sensor (NT) signal	Engine is idling	Pulse generation (See waveform 6)

AT

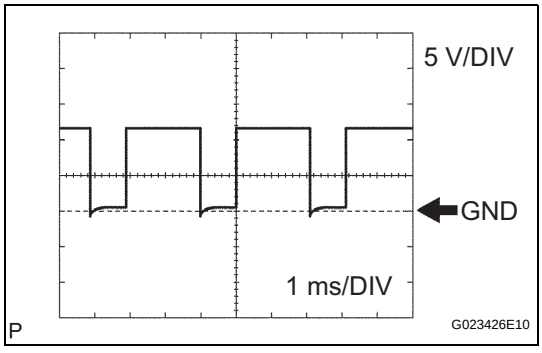

1. Waveform 1

Item	Condition
Terminal	SLT+ - SLT-
Tool setting	5 V/DIV, 1 ms/DIV
Vehicle condition	Engine idling speed

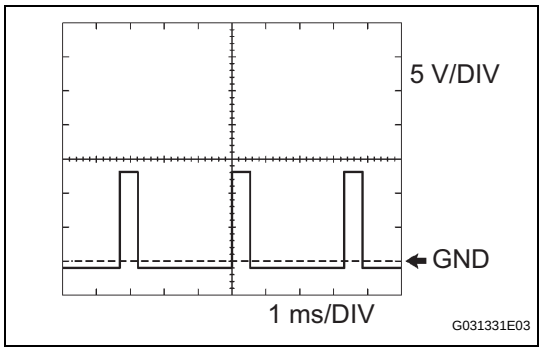

2. Waveform 2

Item	Condition
Terminal	SLU+ - SLU-
Tool setting	5 V/DIV, 1 ms/DIV
Vehicle condition	5th (lock-up) gear

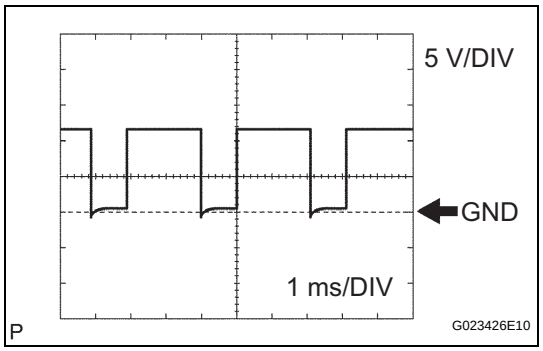

3. Waveform 3

Item	Condition
Terminal	SL2+ - SL2-
Tool setting	5 V/DIV, 1 ms/DIV
Vehicle condition	Engine idling speed

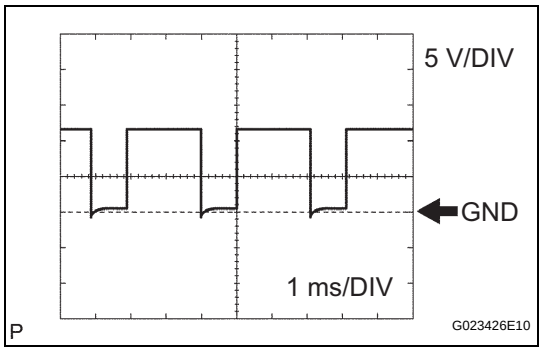

4. Waveform 4

Item	Condition
Terminal	SL1+ - SL1-
Tool setting	5 V/DIV, 1 ms/DIV
Vehicle condition	Engine idling speed

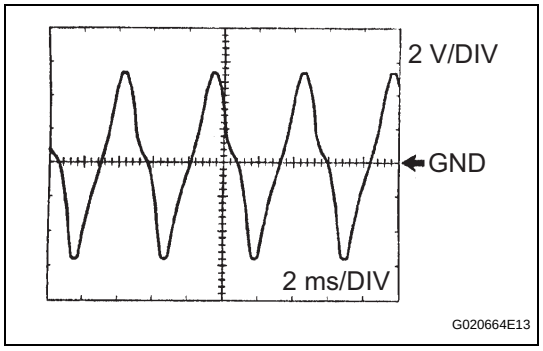

5. Waveform 5

Item	Condition
Terminal	SP2+ - SP2-
Tool setting	2 V/DIV, 2 ms/DIV
Vehicle condition	Vehicle speed 12 mph (20 km/h)

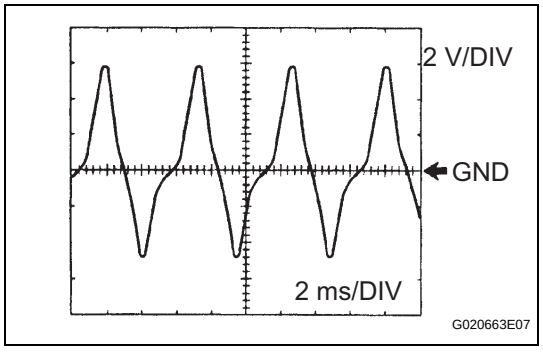

6. Waveform 6

Item	Condition
Terminal	NT+ - NT-
Tool setting	2 V/DIV, 2 ms/DIV
Vehicle condition	Engine idling speed

AT

DIAGNOSIS SYSTEM

1. DESCRIPTION

(a) When troubleshooting On-Board Diagnostic (OBD II) vehicles, the vehicle must be connected to the intelligent tester (complying with SAE J1987). Various data output from the vehicle's ECM can then be read.

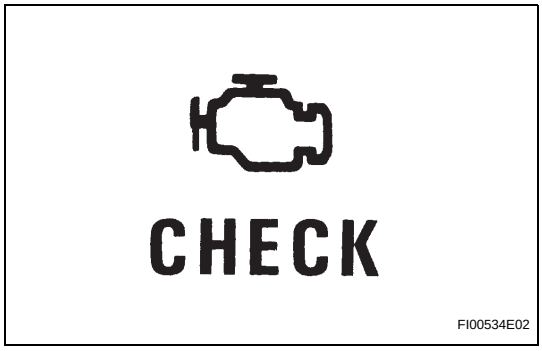

(b) OBD II regulations require that the vehicle's on-board computer illuminate the Malfunction Indicator Lamp (MIL) on the instrument panel when the computer detects a malfunction in:
1. The emission control system/components
2. The power train control components (which affect vehicle emissions)
3. The computer

In addition, the applicable Diagnostic Trouble Codes (DTCs) prescribed by SAE J2012 are recorded in the ECM memory.
If the malfunction does not recur in 3 consecutive trips, the MIL turns off automatically but the DTCs remain recorded in the ECM memory.

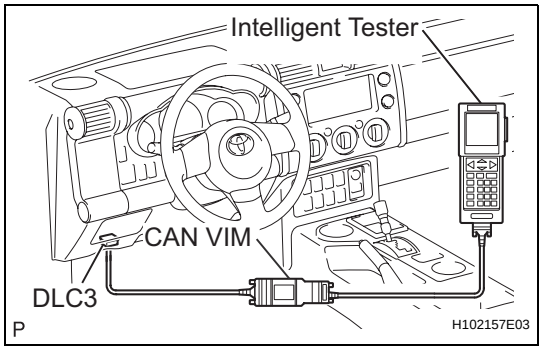

(c) To check DTCs, connect the intelligent tester to the Data Link Connector 3 (DLC3) of the vehicle. The intelligent tester displays DTCs, the freeze frame data and a variety of the engine data.
The DTCs and freeze frame data can be erased with the intelligent tester (See page AT-33).

(d) In order to enhance OBD function on vehicles and develop the Off-Board diagnosis system, CAN communication has been introduced in this system (CAN: Controller Area Network). It minimizes the gap between technician skills and vehicle technology. CAN is a network, which uses a pair of data transmission lines, spanning multiple computers and sensors. It allows high speed communication between the systems and simplification of the wire harness connection. Since this system is equipped with CAN communication, CAN VIM (VIM: Vehicle Interface Module) connecting with intelligent tester is necessary to display any information from the ECM on the tester. (Also communication between the intelligent tester and the ECM uses a CAN communication signal.) When confirming DTCs and any data of the ECM, connect the CAN VIM between the DLC3 and the intelligent tester.

AT

2. NORMAL MODE AND CHECK MODE

(a) The diagnosis system operates in "normal mode" during normal vehicle use. In normal mode, "2 trip detection logic" is used to ensure accurate detection of malfunctions. "Check mode" is also available to technicians as an option. In check mode, "1 trip detection logic" is used for simulating malfunction symptoms and increasing the system's ability to detect malfunctions, including intermittent malfunctions.

3. 2 TRIP DETECTION LOGIC

(a) When a malfunction is first detected, the malfunction is temporarily stored in the ECM memory (1st trip). If the ignition switch is turned OFF and then ON again, and the same malfunction is detected again, the MIL will illuminate.

4. FREEZE FRAME DATA

(a) Freeze frame data records the engine conditions (fuel system, calculated load, engine coolant temperature, fuel trim, engine speed, vehicle speed, etc.) when a malfunction is detected. When troubleshooting, freeze frame data can help determine if the vehicle was running or stopped, if the engine was warmed up or not, if the air-fuel ratio was Lean or Rich, and other data from the time the malfunction occurred.

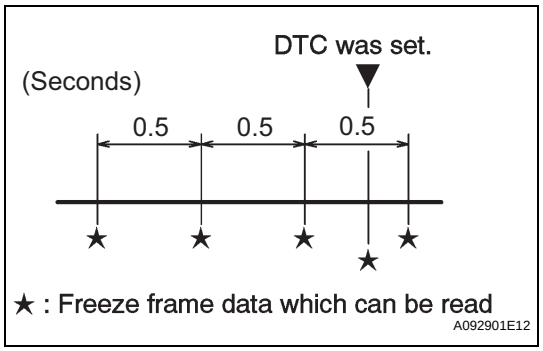

(b) The ECM records engine conditions in the form of freeze frame data every 0.5 seconds. Using the intelligent tester, five separate sets of freeze frame data, including the data values at the time when the DTC was set, can be checked.
- 3 data sets before the DTC was set
- 1 data set when the DTC was set
- 1 data set after the DTC was set

These data sets can be used to simulate the condition of the vehicle around the time the occurrence of the malfunction. The data may assist in identifying of the cause of the malfunction, and in judging whether it was temporary or not.

5. DATA LINK CONNECTOR 3 (DLC3)

(a) The vehicle's ECM uses the ISO 15765-4 communication protocol. The terminal arrangement of the DLC3 complies with SAE J1962 and matches the ISO 15765-4 format.

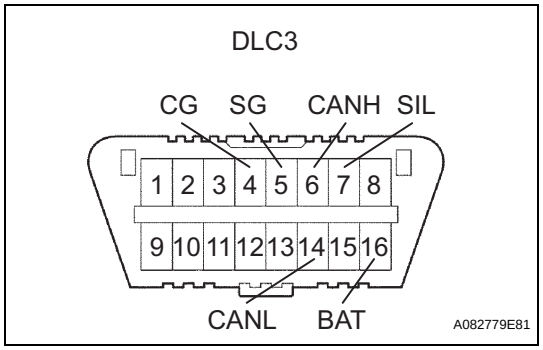

Symbols (Terminal No.)	Terminal Description	Condition	Specified Condition
SIL (7) - SG (5)	Bus "+" line	During transmission	Pulse generation
CG (4) - Body ground	Chassis ground	Always	Below 1 Ω

Symbols (Terminal No.)	Terminal Description	Condition	Specified Condition
SG (5) - Body ground	Signal ground	Always	Below 1 Ω
BAT (16) - Body ground	Battery positive	Always	11 to 14 V
CANH (6) - CANL (14)	CAN bus line	Ignition switch OFF*	54 to 69 Ω
CANH (6) - CG (4)	HIGH-level CAN bus line	Ignition switch OFF*	200 Ω or higher
CANL (14) - CG (4)	LOW-level CAN bus line	Ignition switch OFF*	200 Ω or higher
CANH (6) - BAT (16)	HIGH-level CAN bus line	Ignition switch OFF*	6 kΩ or higher
CANL (14) - BAT (16)	LOW-level CAN bus line	Ignition switch OFF*	6 kΩ or higher

NOTICE:

***: Before measuring the resistance, leave the vehicle as is for at least 1 minute and do not operate the ignition switch, any other switches or the doors.**

If the result is not as specified, the DLC3 may have a malfunction. Repair or replace the harness and connector.

HINT:

Connect the cable of the intelligent tester to the DLC3, turn the ignition switch to the ON position and attempt to use the intelligent tester. If the screen displays UNABLE TO CONNECT TO VEHICLE, a problem exists in the vehicle side or the tester side.

If the communication is normal when the tester is connected to another vehicle, inspect the DLC3 on the original vehicle.

If the communication is still impossible when the tester is connected to another vehicle, the problem is probably in the tester itself. Consult the Service Department listed in the tester's instruction manual.

AT

6. CHECK BATTERY VOLTAGE

Standard voltage:

11 to 14 V

(a) If the voltage is below 11 V, replace the battery before proceeding.

7. CHECK MIL

(a) Check that the MIL illuminates when turning the ignition switch ON.

If the MIL does not illuminate, there is a problem in the MIL circuit (See page ES-404).

(b) When the engine is started, the MIL should turn off.

8. ALL READINESS

(a) For this vehicle, using the intelligent tester allows readiness codes corresponding to all DTCs to be read. When diagnosis (normal or malfunctioning) has been completed, readiness codes are set. Enter the following menus: ENHANCED OBD II / MONITOR INFO on the intelligent tester.

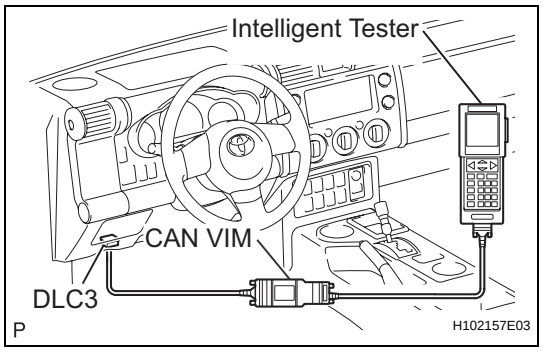

DTC CHECK / CLEAR

1. CHECK DTC

DTCs which are stored in the ECM can be displayed with the intelligent tester.

The tester can display pending DTCs and current DTCs. Some DTCs are not stored if the ECM does not detect a malfunction during consecutive driving cycles. However, malfunctions detected during a single driving cycle are stored as pending DTCs.

(a) Connect the intelligent tester together with the Controller Area Network Vehicle Interface Module (CAN VIN) to the DLC3.

(b) Turn the ignition switch to the ON position.

(c) Enter the following menus: DIAGNOSIS / ENHANCED OBD II / DTC INFO / CURRENT CODES (or PENDING CODE).

(d) Confirm the DTCs and freeze frame data and then write them down.

(e) Confirm the details of the DTCs (See page AT-40).

2. CLEAR DTC

(a) When using the intelligent tester:

(1) Connect the intelligent tester together with the Controller Area Network Vehicle Interface Module (CAN VIN) to the DLC3.

(2) Turn the ignition switch to the ON position.

(3) Enter the following menus: DIAGNOSIS / ENHANCED OBD II / DTC INFO / CLEAR CODES and press YES.

(b) When not using the intelligent tester:

(1) Disconnect the battery terminal or remove the EFI and ETCS fuses from the No. 2 engine room relay block for 60 seconds or more. However, if you disconnect the battery terminal, perform the "INITIALIZATION" procedure (See page AT-19).

No. 2 Engine Room Relay Block:

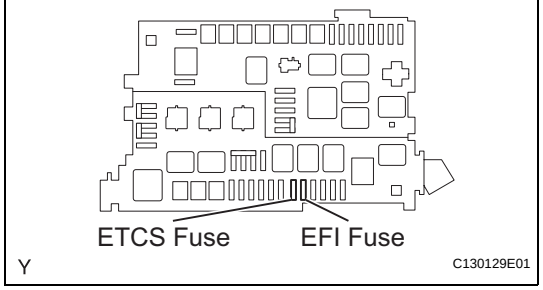

AT

CHECK MODE PROCEDURE

1. DESCRIPTION

Check mode has a higher sensitivity to malfunctions and can detect malfunctions that normal mode cannot detect. Check mode can also detect all the malfunctions that normal mode can detect. In check mode, DTCs are detected with 1 trip detection logic.

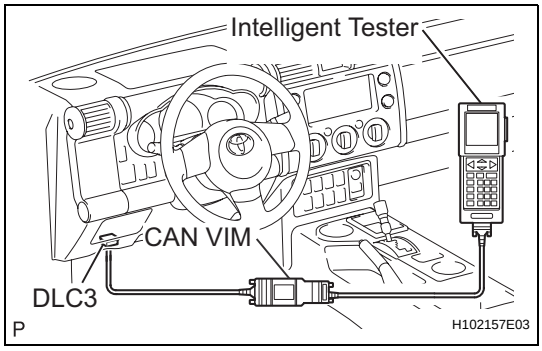

2. CHECK MODE PROCEDURE

(a) Ensure the following conditions:
  (1) Battery positive voltage 11 V or more
  (2) Throttle valve fully closed
  (3) Transmission in the P or N position
  (4) A/C switched off

(b) Turn the ignition switch off.

(c) Connect the intelligent tester together with the Controller Area Network Vehicle Interface Module (CAN VIM) to the DLC3.

(d) Turn the ignition switch to the ON position.

(e) Enter the following menus: DIAGNOSIS / ENHANCED OBD II / CHECK MODE.

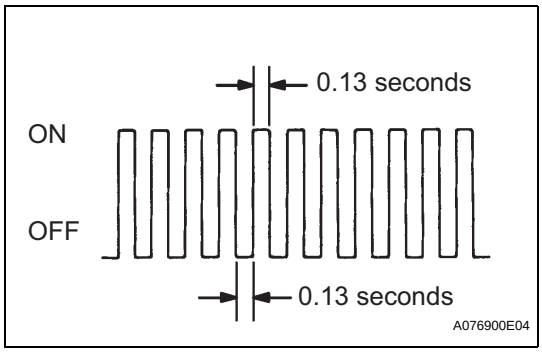

(f) Change the ECM to check mode. Make sure the MIL flashes as shown in the illustration.

NOTICE:

All recorded DTCs and freeze frame data will be erased if: 1) the intelligent tester is used to change the ECM from normal mode to check mode or vice-versa; or 2) during check mode, the ignition switch is turned from ON to ACC or LOCK.

Before entering check mode, make notes of the DTCs and freeze frame data.

(g) Start the engine. The MIL should turn off after the engine starts.

(h) Perform "MONITOR DRIVE PATTERN" for the ECT test (See page AT-21).
 (Or, simulate the conditions of the malfunction described by the customer).

(i) After simulating the malfunction conditions, use the intelligent tester diagnosis selector to check the DTC and freeze frame data.

AT

FAIL-SAFE CHART

1. FAIL-SAFE CHART

(a) This function minimizes the loss of the ECT functions when a malfunction occurs in each sensor or solenoid.

Malfunction Part	Function
DTC P0710, P0712 and P0713: No. 1 ATF Temperature Sensor	During a No. 1 ATF temperature sensor malfunction, up-shift to the 5th gear and flex lock-up clutch control are prohibited.
DTC P0722: Output Speed Sensor (SP2)	During an output speed sensor malfunction, shift control is effected through the input speed sensor signal (NT).
DTC P0751, P0756, P0771, P0973, P0974, P0976, P0977, P0985 and P0986: Shift Solenoid Valve S1, S2 and SR	The current to the failed solenoid valve is cut off and control is effected by operating the other solenoid valves with normal operation. Shift control is effected depending on the failed solenoid as described in the table below.
DTC P0748, P0776 and P0778: Shift Solenoid Valve SL1 and SL2	During a solenoid valve SL1 or SL2 malfunction, up-shift to the 5th gear is prohibited.
DTC P02714 and P2716: Shift Solenoid Valve SLT	During a solenoid valve SLT malfunction, the current to the solenoid valve is stopped. This stops line pressure optimal control, and shift shock increases. However, shifting is effected through normal clutch pressure control.
DTC P2757: Shift Solenoid Valve SLU	During a solenoid valve SLU malfunction, the current to the solenoid valve is stopped. This stops lock-up control and flex lock-up control, and fuel economy decreases.

(b) Fail-safe function:
If either of the shift solenoid valve circuits has an open or short failure, the ECM turns the other shift solenoid ON and OFF in order to shift into the gear positions shown in the table below.
In case of a short circuit, the ECM stops sending current to the short circuit solenoid.
Even if starting the engine again in the fail-safe mode, the gear position remains in the same position.

AT

Position	Normal						Shift Solenoid S1 Malfunction					
	Gear	S1	S2	SR	SL1	SL2	Gear	S1	S2	SR	SL1	SL2
R	R	ON	OFF	OFF	OFF	ON	R	X	OFF	OFF	OFF	ON
D	1st	ON	OFF	OFF	OFF	ON	4th ↓ 3rd	X	OFF ↓ ON	OFF	OFF	ON
	2nd	ON	ON	OFF	OFF	ON	3rd	X	ON	OFF	OFF	ON
	3rd	OFF	ON	OFF	OFF	ON	3rd	X	ON	OFF	OFF	ON
	4th	OFF	OFF	OFF	OFF	ON	4th	X	OFF	OFF	OFF	ON
	5th	OFF	OFF	ON	ON	OFF	5th	X	OFF	ON	ON	OFF
4	1st	ON	OFF	OFF	OFF	ON	4th ↓ 3rd	X	OFF ↓ ON	OFF	OFF	ON
	2nd	ON	ON	OFF	OFF	ON	3rd	X	ON	OFF	OFF	ON
	3rd	OFF	ON	OFF	OFF	ON	3rd	X	ON	OFF	OFF	ON
	4th	OFF	OFF	OFF	OFF	ON	4th	X	OFF	OFF	OFF	ON

Position	Normal						Shift Solenoid S1 Malfunction					
	Gear	S1	S2	SR	SL1	SL2	Gear	S1	S2	SR	SL1	SL2
3	1st	ON	OFF	OFF	OFF	ON	3rd ↓ 3rd E/B	X	OFF ↓ ON	OFF	OFF	ON ↓ OFF
	2nd	ON	ON	OFF	OFF	ON	3rd ↓ 3rd E/B	X	ON	OFF	OFF	ON ↓ OFF
	3rd E/B	OFF	ON	OFF	OFF	OFF	3rd E/B	X	ON	OFF	OFF	OFF
2	1st	ON	OFF	OFF	OFF	ON	1st	X	OFF	OFF	OFF	ON
	2nd E/B	ON	ON	ON	OFF	OFF	3rd E/B	X	ON	ON	OFF	OFF
L	1st E/B	ON	OFF	OFF	OFF	OFF	1st E/B	X	OFF	OFF	OFF	OFF

X: Malfunction

Position	Shift Solenoid S2 Malfunction						Shift Solenoid SR Malfunction					
	Gear	S1	S2	SR	SL1	SL2	Gear	S1	S2	SR	SL1	SL2
R	R	ON	X	OFF	OFF	ON	R	ON	OFF	X	OFF	ON
D	1st	ON	X	OFF	OFF	ON	1st	ON	OFF	X	OFF	ON
	1st ↓ 4th	ON ↓ OFF	X	OFF	OFF	ON	2nd	ON	ON	X	OFF	ON
	4th	OFF	X	OFF	OFF	ON	3rd	OFF	ON	X	OFF	ON
	4th	OFF	X	OFF	OFF	ON	4th	OFF	OFF	X	OFF	ON
	5th	OFF	X	ON	ON	OFF	4th	OFF	OFF	X	ON	OFF
4	1st	ON	X	OFF	OFF	ON	1st	ON	OFF	X	OFF	ON
	1st ↓ 4th	ON ↓ OFF	X	OFF	OFF	ON	2nd	ON	ON	X	OFF	ON
	4th	OFF	X	OFF	OFF	ON	3rd	OFF	ON	X	OFF	ON
	4th	OFF	X	OFF	OFF	ON	4th	OFF	OFF	X	OFF	ON
3	1st	ON	X	OFF	OFF	ON	1st	ON	OFF	X	OFF	ON
	1st ↓ 3rd E/B	ON ↓ OFF	X	OFF	OFF	ON ↓ OFF	2nd	ON	ON	X	OFF	ON
	3rd E/B	OFF	X	OFF	OFF	OFF	3rd E/B ↓ 3rd	OFF	ON	X	OFF	OFF ↓ ON
2	1st	ON	X	OFF	OFF	ON	1st	ON	OFF	X	OFF	ON
	2nd E/B ↓ 4th	ON ↓ OFF	X	ON	OFF	OFF ↓ ON	2nd	ON	ON	X	OFF	OFF
L	1st E/B	ON	X	OFF	OFF	OFF	1st E/B	ON	OFF	X	OFF	OFF

X: Malfunction

Position	Shift Solenoid S1 and S2 Malfunction						Shift Solenoid S1 and SR Malfunction					
	Gear	S1	S2	SR	SL1	SL2	Gear	S1	S2	SR	SL1	SL2
R	R	X	X	OFF	OFF	ON	R	X	OFF	X	OFF	ON
D	4th	X	X	OFF	OFF	ON	4th ↓ 3rd	X	OFF ↓ ON	X	OFF	ON
	4th	X	X	OFF	OFF	ON	3rd	X	ON	X	OFF	ON
	4th	X	X	OFF	OFF	ON	3rd	X	ON	X	OFF	ON
	4th	X	X	OFF	OFF	ON	4th	X	OFF	X	OFF	ON
	5th	X	X	ON	ON	OFF	4th	X	OFF	X	ON ↓ OFF	OFF ↓ ON

AT

Position	Shift Solenoid S1 and S2 Malfunction						Shift Solenoid S1 and SR Malfunction					
	Gear	S1	S2	SR	SL1	SL2	Gear	S1	S2	SR	SL1	SL2
4	4th	X	X	OFF	OFF	ON	4th ↓ 3rd	X	OFF ↓ ON	X	OFF	ON
	4th	X	X	OFF	OFF	ON	3rd	X	ON	X	OFF	ON
	4th	X	X	OFF	OFF	ON	3rd	X	ON	X	OFF	ON
	4th	X	X	OFF	OFF	ON	4th	X	OFF	X	OFF	ON
3	3rd ↓ 3rd E/B	X	X	OFF	OFF	ON ↓ OFF	3rd	X	OFF ↓ ON	X	OFF	ON
	3rd ↓ 3rd E/B	X	X	OFF	OFF	ON ↓ OFF	3rd	X	ON	X	OFF	ON
	3rd E/B	X	X	OFF	OFF	OFF	3rd E/B ↓ 3rd	X	ON	X	OFF	OFF ↓ ON
2	1st	X	X	OFF	OFF	ON	1st	X	OFF	X	OFF	ON
	4th	X	X	ON	OFF	OFF ↓ ON	2nd	X	ON	X	OFF	OFF
L	1st E/B	X	X	OFF	OFF	OFF	1st E/B	X	OFF	X	OFF	OFF

X: Malfunction

Position	Shift Solenoid S2 and SR Malfunction						Shift Solenoid S1, S2 and SR Malfunction					
	Gear	S1	S2	SR	SL1	SL2	Gear	S1	S2	SR	SL1	SL2
R	R	ON	X	X	OFF	ON	R	X	X	X	OFF	ON
D	1st	ON	X	X	OFF	ON	4th	X	X	X	OFF	ON
	1st ↓ 4th	ON ↓ OFF	X	X	OFF	ON	4th	X	X	X	OFF	ON
	4th	OFF	X	X	OFF	ON	4th	X	X	X	OFF	ON
	4th	OFF	X	X	OFF	ON	4th	X	X	X	OFF	ON
	4th	OFF	X	X	ON ↓ OFF	OFF ↓ ON	4th	X	X	X	ON ↓ OFF	OFF ↓ ON
4	1st	ON	X	X	OFF	ON	4th	X	X	X	OFF	ON
	1st ↓ 4th	ON ↓ OFF	X	X	OFF	ON	4th	X	X	X	OFF	ON
	4th	OFF	X	X	OFF	ON	4th	X	X	X	OFF	ON
	4th	OFF	X	X	OFF	ON	4th	X	X	X	OFF	ON
3	1st	ON	X	X	OFF	ON	3rd	X	X	X	OFF	ON
	1st ↓ 3rd	ON ↓ OFF	X	X	OFF	ON	3rd	X	X	X	OFF	ON
	3rd E/B ↓ 3rd	OFF	X	X	OFF	OFF ↓ ON	3rd E/B ↓ 3rd	X	X	X	OFF	OFF ↓ ON
2	1st	ON	X	X	OFF	ON	1st	X	X	X	OFF	ON
	1st E/B ↓ 1st	ON	X	X	OFF	OFF ↓ ON	1st E/B ↓ 1st	X	X	X	OFF	OFF ↓ ON
L	1st E/B	ON	X	X	OFF	OFF	1st E/B	X	X	X	OFF	OFF

X: Malfunction

AT

HINT:

- ↓: Condition in the electrical malfunction is shown above "↓".
- ↓: Condition in the fail-safe mode is shown below "↓".
- E/B: Engine brake.

DATA LIST / ACTIVE TEST

1. DATA LIST

HINT:

According to the DATA LIST displayed on the intelligent tester, you can read the values of components, such as the switches, sensors and actuators, without removing any parts. Reading the DATA LIST as a first step of troubleshooting is one method of shortening labor time.

NOTICE:

In the table below, the values listed under "Normal Condition" are for reference only. Do not depend solely on these reference values when judging whether a part is faulty or not.

(a) Warm up the engine.

(b) Turn the ignition switch off.

(c) Connect the intelligent tester together with the CAN VIM (controller area network vehicle interface module) to the DLC3.

(d) Turn the ignition switch to the ON position.

(e) Push the "ON" button of the tester.

(f) Select the items "DIAGNOSIS / ENHANCED OBD II / DATA LIST / A/T".

(g) According to the display on the tester, read the "DATA LIST".

Item	Measurement Item/ Display (Range)	Normal Condition	Diagnostic Note
SPD (SP2)	Counter Gear Speed / min.: 0 mph (0 km/h) max.: 158 mph (255 km/h)	Vehicle stopped: 0 mph (0 km/h)	-
SPD (NT)	Input Turbine Speed/ display: 50 rpm	[HINT] • Lock-Up ON (After warming up the engine); Input turbine speed (NT) equal to the engine speed. • Lock-Up OFF (Idling in N position); Input turbine speed (NT) nearly equal to the engine speed.	-
PNP SW [NSW]	PNP Switch Status/ ON or OFF	Shift lever position is; P or N: ON Except P and N: OFF	When the shift lever position displayed on the intelligent tester differs from the actual position, adjustment of the PNP switch or the shift cable may be incorrect. HINT: When the failure still occurs even after adjusting these parts. (See page AT-45)
STOP LIGHT SW	Stop Light Switch Status/ ON or OFF	• Brake Pedal is depressed: ON • Brake Pedal is released: OFF	-
SHIFT	ECM gear shift command/ 1st, 2nd, 3rd, 4th or 5th	Shift lever position is; • L: 1st • 2: 1st or 2nd • 3: 1st, 2nd or 3rd • 4: 1st, 2nd, 3rd or 4th • D: 1st, 2nd, 3rd, 4th or 5th	-
REVERSE	PNP Switch Status/ ON or OFF	Shift lever position is; R: ON Except R: OFF	Same as PNP SW [NSW]

Item	Measurement Item/ Display (Range)	Normal Condition	Diagnostic Note
DRIVE	PNP Switch Status/ ON or OFF	Shift lever position is; D or 4: ON Except D and 4: OFF	Same as PNP SW [NSW]
4TH/DRIVE	PNP Switch Status/ ON or OFF	Shift lever position is; 4: ON Except 4: OFF	Same as PNP SW [NSW]
3RD	PNP Switch Status/ ON or OFF	Shift lever position is; 3: ON Except 3: OFF	Same as PNP SW [NSW]
2ND	PNP Switch Status/ ON or OFF	Shift lever position is; 2 or L: ON Except 2 and L: OFF	Same as PNP SW [NSW]
LOW	PNP Switch Status/ ON or OFF	Shift lever position is; L: ON Except L: OFF	Same as PNP SW [NSW]
AT OIL TEMP1	No. 1 ATF Temperature Sensor Value/ min.: -40°C (-40°F) max.: 215°C (419°F)	• After Stall Test; Approximately 80°C (176°F) • Equal to ambient temperature during cold soak	If the value is "-40°C (-40°F)" or "150°C (302°F) or more", No. 1 ATF temperature sensor circuit is open or short.
AT OIL TEMP2	No. 2 ATF Temperature Sensor Value/ min.: -40°C (-40°F) max.: 215°C (419°F)	• After Stall Test; Approximately 80°C (176°F) • Equal to ambient temperature during cold soak	If the value is "-40°C (-40°F)" or "150°C (302°F) or more", No. 2 ATF temperature sensor circuit is open or short.
LOCK UP	Lock-up status/ ON or OFF	• Lock-up: ON • Expect lock-up: OFF	-
LOCK UP SOL	Lock Up Solenoid Status/ ON or OFF	• Lock Up: ON • Except Lock Up: OFF	-
SOLENOID (SLU)	Shift Solenoid SLU Status/ ON or OFF	• Lock Up: ON • Except Lock Up: OFF	-
SOLENOID (SLT)	Shift Solenoid SLT Status/ ON or OFF	• Accelerator pedal is depressed: OFF • Accelerator pedal is released: ON	-

AT

2. ACTIVE TEST

HINT:

Performing the ACTIVE TEST using the intelligent tester allows components, such as the relay, VSV, and actuator, to be operated without removing any parts. Performing the ACTIVE TEST as a first step of troubleshooting is one method of shortening labor time. It is possible to display the DATA LIST during the ACTIVE TEST.

(a) Warm up the engine.
(b) Turn the ignition switch off.
(c) Connect the intelligent tester together with the CAN VIM (controller area network vehicle interface module) to the DLC3.
(d) Turn the ignition switch to the ON position.
(e) Push the "ON" button of the tester.
(f) Select the items "DIAGNOSIS / ENHANCED OBD II / ACTIVE TEST".

(g) According to the display on the tester, perform the "ACTIVE TEST".

Item	Test Details	Diagnostic Note
SOLENOID (SLU)	[Test Details] Operate the shift solenoid SLU [Vehicle Condition] • Vehicle Stopped. • Shift lever P or N position	-
SOLENOID (SLT)*	[Test Details] Operate the shift solenoid SLT and raise the line pressure. [Vehicle Condition] • Vehicle Stopped. • Engine Idling HINT: OFF: Line pressure up (When the active test of "SOLENOID (SLT)" is performed, the ECM commands the SLT solenoid to turn off). ON: No action (normal operation)	-
SOLENOID (S1)	[Test Details] Operate the shift solenoid S1 [Vehicle Condition] • Vehicle Stopped. • Shift lever P or N position	-
SOLENOID (S2)	[Test Details] Operate the shift solenoid S2 [Vehicle Condition] • Vehicle Stopped. • Shift lever P or N position	-
LOCK UP	[Test Details] Control the shift solenoid SLU to set the automatic transmission to the lock-up condition. [Vehicle Condition] Vehicle Speed: 36 mph (60 km/h) or more	Possible to check the SLU operation.
SHIFT	[Test Details] Operate the shift solenoid valve and set each shift position manually. [Vehicle Condition] Vehicle Speed: Less than 30 mph (50 km/h) [Others] • Press →button: Shift up • Press ←button: Shift down	Possible to check the operation of the shift solenoid valves. HINT: Shifting to the 5th gear is possible only when the vehicle is stationary with the engine idling.
SOLENOID (SR)	[Test Details] Operate the shift solenoid SR [Vehicle Condition] • Vehicle Stopped. • Shift lever P or N position	-
SOLENOID (SL1)	[Test Details] Operate the shift solenoid SL1 [Vehicle Condition] • Vehicle Stopped. • Shift lever P or N position	-
SOLENOID (SL2)	[Test Details] Operate the shift solenoid SL2 [Vehicle Condition] • Vehicle Stopped. • Shift lever P or N position	-

*: "SOLENOID (SLT)" in the ACTIVE TEST is performed to check the line pressure changes by connecting SST to the automatic transmission, which is used in the HYDRAULIC TEST (See page AT-18) as well.

HINT:
The pressure values in ACTIVE TEST and HYDRAULIC TEST are different from each other.

DIAGNOSTIC TROUBLE CODE CHART

If a DTC is displayed during the DTC check, check the circuit listed in the table below and proceed to the page given.
HINT:

- *1: "Comes on" means that the MIL illuminates.
- *2: "DTC stored" means that the ECM memorizes the malfunction code if the DTC detection condition(s) are met.
- These DTCs may be output when the clutch, brake and gear components, etc., inside the automatic transmission are damaged.

DTC No.	Detection Item	Trouble Areas	MIL *1	Memory *2	See page
P0705	Transmission Range Sensor Circuit Malfunction (PRNDL Input)	- Open or short in park/neutral position switch circuit - Park/neutral position switch - ECM	Comes on	DTC stored	AT-45
P0710	Transmission Fluid Temperature Sensor "A" Circuit	- Open or short in No. 1 ATF temperature sensor circuit - Transmission wire (No. 1 ATF temperature sensor) - ECM	Comes on	DTC stored	AT-51
P0711	Transmission Fluid Temperature Sensor "A" Performance	- Transmission wire (No. 1 ATF temperature sensor) - ECM	Comes on	DTC stored	AT-56
P0712	Transmission Fluid Temperature Sensor "A" Circuit Low Input	- Short in No. 1 ATF temperature sensor circuit - Transmission wire (No. 1 ATF temperature sensor) - ECM	Comes on	DTC stored	AT-51
P0713	Transmission Fluid Temperature Sensor "A" Circuit High Input	- Open in No. 1 ATF temperature sensor circuit - Transmission wire (No. 1 ATF temperature sensor) - ECM	Comes on	DTC stored	AT-51
P0717	Input Speed Sensor Circuit No Signal	- Open or short in speed sensor (NT) circuit - Speed sensor (NT) - ECM	Comes on	DTC stored	AT-59
P0722	Output Speed Sensor Circuit No Signal	- Open or short in speed sensor (SP2) circuit - Speed sensor (SP2) - ECM	Comes on	DTC stored	AT-64
P0748	Pressure Control Solenoid "A" Electrical (Shift Solenoid Valve SL1)	- Open or short in shift solenoid valve SL1 circuit - Shift solenoid valve SL1 - ECM	Comes on	DTC stored	AT-69

DTC No.	Detection Item	Trouble Areas	MIL *1	Memory *2	See page
P0751	Shift Solenoid "A" Performance (Shift Solenoid Valve S1)	- Shift solenoid valve S1 remains open or closed - Shift solenoid valve SLT remains open or closed - Valve body is blocked - Automatic transmission (clutch, brake or gear, etc.)	Comes on	DTC stored	AT-72
P0756	Shift Solenoid "B" Performance (Shift Solenoid Valve S2)	- Shift solenoid valve S2 remains open or closed - Shift solenoid valve SLT remains open or closed - Valve body is blocked - Automatic transmission (clutch, brake or gear, etc.)	Comes on	DTC stored	AT-78
P0771	Shift Solenoid "E" Performance (Shift Solenoid Valve SR)	- Shift solenoid valve SR remains open or closed - Shift solenoid valve SL1 remains open or closed - Shift solenoid valve SLT remains open or closed - Valve body is blocked - Automatic transmission (clutch, brake or gear, etc.)	Comes on	DTC stored	AT-84
P0776	Pressure Control Solenoid "B" Performance (Shift Solenoid Valve SL2)	- Shift solenoid valve SL2 remains open - Shift solenoid valve SLT remains open or closed - Valve body is blocked - Automatic transmission (clutch, brake or gear, etc.)	Comes on	DTC stored	AT-89
P0778	Pressure Control Solenoid "B" Electrical (Shift Solenoid Valve SL2)	- Open or short in shift solenoid valve SL2 circuit - Shift solenoid valve SL2 - ECM	Comes on	DTC stored	AT-94
P0781	1-2 Shift (1-2 Shift Valve)	- Valve body is blocked up or stuck (1-2 shift valve) - Shift solenoid valve SLT remains open or closed - Automatic transmission (clutch, brake or gear, etc.)	Comes on	DTC stored	AT-98
P0973	Shift Solenoid "A" Control Circuit Low (Shift Solenoid Valve S1)	- Short in shift solenoid valve S1 circuit - Shift solenoid valve S1 - ECM	Comes on	DTC stored	AT-103

AT

DTC No.	Detection Item	Trouble Areas	MIL *1	Memory *2	See page
P0974	Shift Solenoid "A" Control Circuit High (Shift Solenoid Valve S1)	- Open in shift solenoid valve S1 circuit - Shift solenoid valve S1 - ECM	Comes on	DTC stored	AT-103
P0976	Shift Solenoid "B" Control Circuit Low (Shift Solenoid Valve S2)	- Short in shift solenoid valve S2 circuit - Shift solenoid valve S2 - ECM	Comes on	DTC stored	AT-107
P0977	Shift Solenoid "B" Control Circuit High (Shift Solenoid Valve S2)	- Open in shift solenoid valve S2 circuit - Shift solenoid valve S2 - ECM	Comes on	DTC stored	AT-107
P0985	Shift Solenoid "E" Control Circuit Low (Shift Solenoid Valve SR)	- Short in shift solenoid valve SR circuit - Shift solenoid valve SR - ECM	Comes on	DTC stored	AT-111
P0986	Shift Solenoid "E" Control Circuit High (Shift Solenoid Valve SR)	- Open in shift solenoid valve SR circuit - Shift solenoid valve SR - ECM	Comes on	DTC stored	AT-111
P2714	Pressure Control Solenoid "D" Performance (Shift Solenoid Valve SLT)	- Shift solenoid valve SLT remains open or closed - Shift solenoid valve S1, S2, SR, SL1 or SL2 remains open or closed - Valve body is blocked - Automatic transmission (clutch, brake or gear, etc.)	Comes on	DTC stored	AT-115
P2716	Pressure Control Solenoid "D" Electrical (Shift Solenoid Valve SLT)	- Open or short in shift solenoid valve SLT circuit - Shift solenoid valve SLT - ECM	Comes on	DTC stored	AT-122
P2740	Transmission Fluid Temperature Sensor "B" Circuit	- Open or short in No. 2 ATF temperature sensor circuit - No. 2 ATF temperature sensor - ECM	Comes on	DTC stored	AT-126
P2742	Transmission Fluid Temperature Sensor "B" Circuit Low Input	- Short in No. 2 ATF temperature sensor circuit - No. 2 ATF temperature sensor - ECM	Comes on	DTC stored	AT-126

DTC No.	Detection Item	Trouble Areas	MIL *1	Memory *2	See page
P2743	Transmission Fluid Temperature Sensor "B" Circuit High Input	- Open in No. 2 ATF temperature sensor circuit - No. 2 ATF temperature sensor - ECM	Comes on	DTC stored	AT-126
P2757	Torque Converter Clutch Pressure Control Solenoid Performance (Shift Solenoid Valve SLU)	- Shift solenoid valve SLU remains open or closed - Valve body is blocked- Shift solenoid valve SLU - Torque converter clutch - Automatic transmission (clutch, brake or gear, etc.) - Line pressure is too low	Comes on	DTC stored	AT-131
P2759	Torque Converter Clutch Pressure Control Solenoid Control Circuit Electrical (Shift Solenoid Valve SLU)	- Open or short in shift solenoid valve SLU circuit - Shift solenoid valve SLU - ECM	Comes on	DTC stored	AT-136

DTC	P0705	Transmission Range Sensor Circuit Malfunction (PRNDL Input)

DESCRIPTION

The park/neutral position switch detects the shift lever position and sends signals to the ECM.

DTC No.	DTC Detection Conditions	Trouble Areas
P0705	When any one of following conditions (A) to (C) is met (2-trip detection logic): (A) Any 2 or more of the following signals are ON simultaneously. – NSW input signal is ON. – R input signal is ON. – D input signal is ON. – 3 input signal is ON. – 2 input signal is ON. (B) All switches are OFF simultaneously for P (NSW), R, N (NSW), D, 3 and 2 positions. (C) When NSW or R input signal is ON, 4 or L input signal is ON.	• Open or short in park/neutral position switch circuit • Park/neutral position switch • ECM

MONITOR DESCRIPTION

The DTC indicates a problem with the park/neutral position switch and the wire harness in the park/neutral position switch circuit.
For security, the park/neutral position switch detects the shift lever position so that the engine can be started only when the vehicle is in the P or N shift position.
When the park/neutral position switch sends more than one signal at a time from switch positions P, R, N, D, 3 or 2, the ECM interprets this as a fault in the switch. The ECM will turn on the MIL and store the DTC.

MONITOR STRATEGY

Related DTCs	P0705: Park/neutral position switch/Verify switch input
Required sensors/Components	Park/neutral position switch
Frequency of operation	Continuous
Duration	Conditions (A) and (C): 2 seconds Condition (B): 60 seconds
MIL operation	2 driving cycles
Sequence of operation	None

AT

TYPICAL ENABLING CONDITIONS

The monitor will run whenever the following DTCs are not present.	None
Ignition switch	ON
Battery voltage	10.5 V or more

TYPICAL MALFUNCTION THRESHOLDS

One of the following conditions is met: Condition (A), (B) or (C)

Condition (A)

Number of the following signals input at the same time	2 or more
Park/neutral position switch	ON
R switch	ON
D switch	ON
3 switch	ON

2 switch	ON

Condition (B)

All of following conditions are met

Park/neutral position switch	OFF
R switch	OFF
D switch	OFF
3 switch	OFF
2 switch	OFF

Condition (C)

Both (i) and (ii) are met

(i) One of following conditions is met

Park/neutral position switch	ON
R switch	ON

(ii) One of following conditions is met

4 switch	ON
L switch	ON

COMPONENT OPERATING RANGE

Park/neutral position switch	The park/neutral position switch sends only one signal to the ECM

WIRING DIAGRAM

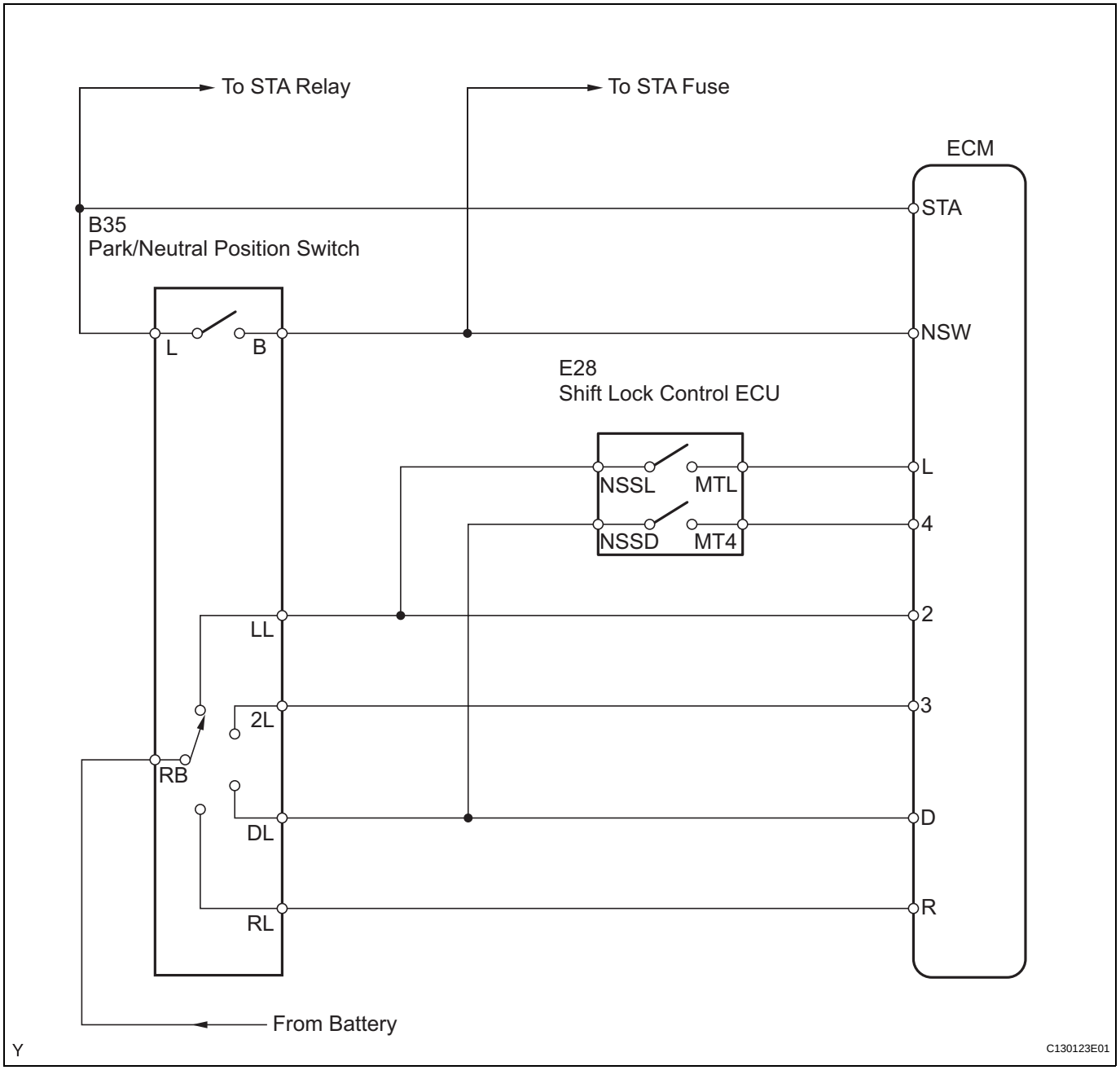

INSPECTION PROCEDURE

HINT:

According to the DATA LIST displayed on the intelligent tester, you can read the values of components, such as the switches, sensors and actuators, without removing any parts. Reading the DATA LIST as a first step of troubleshooting is one method of shortening labor time.

NOTICE:

In the table below, the values listed under "Normal Condition" are for reference only. Do not depend solely on these reference values when judging whether a part is faulty or not.

1. Connect the intelligent tester together with the CAN VIM (Controller Area Network Vehicle Interface Module) to the DLC3.
2. Turn the ignition switch to the ON position.
3. Push the "ON" button of the tester.
4. Select the items "DIAGNOSIS / ENHANCED OBD II / DATA LIST / A/T".

5. According to the display on the tester, read the "DATA LIST".

Item	Measurement Item/ Display (Range)	Normal Condition	Diagnostic Note
PNP SW [NSW]	PNP Switch Status/ ON or OFF	Shift lever position is; P or N: ON Except P and N: OFF	When the shift lever position displayed on the intelligent tester differs from the actual position, adjustment of the PNP switch or the shift cable may be incorrect.
REVERSE	PNP Switch Status/ ON or OFF	Shift lever position is; R: ON Except R: OFF	
DRIVE	PNP Switch Status/ ON or OFF	Shift lever position is; D or 4: ON Except D and 4: OFF	
4th/DRIVE	PNP Switch Status/ ON or OFF	Shift lever position is; 4: ON Except 4: OFF	
3RD	PNP Switch Status/ ON or OFF	Shift lever position is; 3: ON Except 3: OFF	
2ND	PNP Switch Status/ ON or OFF	Shift lever position is; 2 or L: ON Except 2 and L: OFF	
LOW	PNP Switch Status/ ON or OFF	Shift lever position is; L: ON Except L: OFF	

1 INSPECT PARK/NEUTRAL POSITION SWITCH ASSEMBLY

Switch Side:

(Connector Front View)

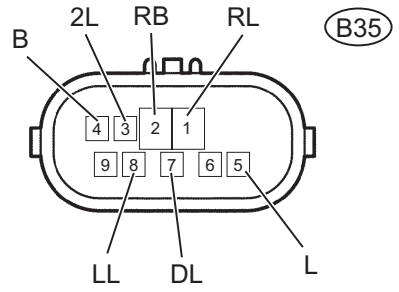

C130119E05

(a) Disconnect the park/neutral position switch connector.
(b) Measure the resistance when the shift lever is moved to each position.

Standard resistance

Shift Position	Tester Connection	Specified Condition
P or N	4 (B) - 5 (L)	Below 1 Ω
Except P and N	4 (B) - 5 (L)	10 kΩ or higher
R	1 (RL) - 2 (RB)	Below 1 Ω
Except R	1 (RL) - 2 (RB)	10 kΩ or higher
D or 4	2 (RB) - 7 (DL)	Below 1 Ω
Except D and 4	2 (RB) - 7 (DL)	10 kΩ or higher
3	2 (RB) - 3 (2L)	Below 1 Ω
Except 3	2 (RB) - 3 (2L)	10 kΩ or higher
2 or L	2 (RB) - 8 (LL)	Below 1 Ω
Except 2 and L	2 (RB) - 8 (LL)	10 kΩ or higher

NG → **REPLACE PARK/NEUTRAL POSITION SWITCH ASSEMBLY**

OK

2 INSPECT SHIFT LOCK CONTROL ECU SUB-ASSEMBLY

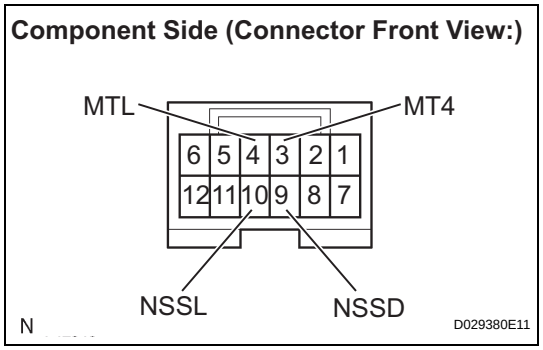

(a) Connect the park/neutral position switch connector.
(b) Disconnect the shift lock control ECU connector.
(c) Measure the resistance when the shift lever is moved to each position.

Standard resistance

Shift Position	Tester Connection	Specified Condition
D	9 (NSSD) - 3 (MT4)	10 kΩ or higher
4	9 (NSSD) - 3 (MT4)	Below 1 Ω
2	10 (NSSL) - 4 (MTL)	10 kΩ or higher
L	10 (NSSL) - 4 (MTL)	Below 1 Ω

NG → **REPLACE SHIFT LOCK CONTROL ECU SUB-ASSEMBLY**

OK

3 CHECK HARNESS AND CONNECTOR (PARK/NEUTRAL POSITION SWITCH - ECM)

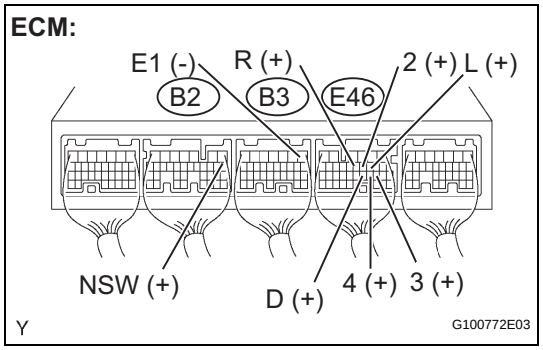

(a) Connect the shift lock control ECU connector.
(b) Turn the ignition switch to the ON position.
(c) Measure the voltage when the shift lever is moved to each position.

Standard voltage

Shift Position	Tester Connection	Specified Condition
P or N	B2-8 (NSW) - B3-1 (E1)	Below 2 V
Except P and N	B2-8 (NSW) - B3-1 (E1)	11 to 14 V
R	E46-11 (R) - B3-1 (E1)	11 to 14 V*
Except R	E46-11 (R) - B3-1 (E1)	Below 1 V
D or 4	E46-21 (D) - B3-1 (E1)	11 to 14 V
Except D and 4	E46-21 (D) - B3-1 (E1)	Below 1 V
4	E46-20 (4) - B3-1 (E1)	11 to 14 V
Except 4	E46-20 (4) - B3-1 (E1)	Below 1 V
3	E46-19 (3) - B3-1 (E1)	11 to 14 V
Except 3	E46-19 (3) - B3-1 (E1)	Below 1 V
2 or L	E46-10 (2) - B3-1 (E1)	11 to 14 V
Except 2 and L	E46-10 (2) - B3-1 (E1)	Below 1 V
L	E46-9 (L) - B3-1 (E1)	11 to 14 V
Except L	E46-9 (L) - B3-1 (E1)	Below 1 V

HINT:
*: The voltage will drop slightly due to illumination of the back up light.

NG → **REPAIR OR REPLACE HARNESS OR CONNECTOR**

AT

OK

REPLACE ECM

DTC	P0710	Transmission Fluid Temperature Sensor "A" Circuit

DTC	P0712	Transmission Fluid Temperature Sensor "A" Circuit Low Input

DTC	P0713	Transmission Fluid Temperature Sensor "A" Circuit High Input

DESCRIPTION

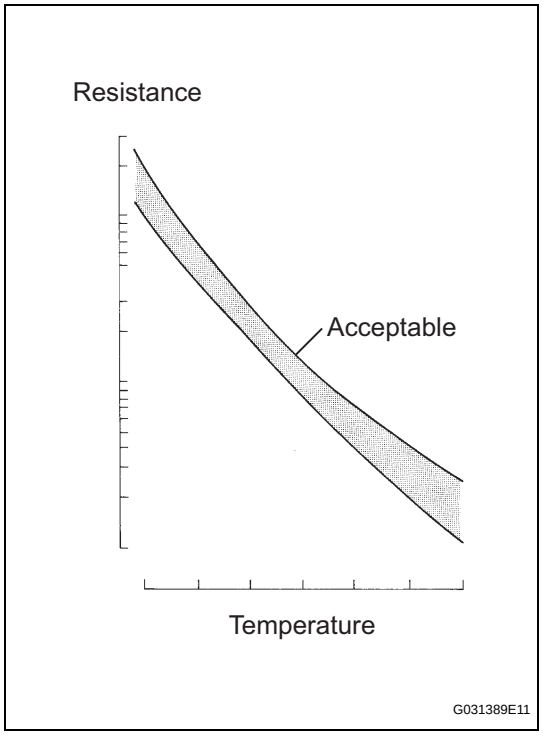

The ATF (Automatic Transmission Fluid) temperature sensor converts the fluid temperature into a resistance value which is input into the ECM.
The ECM applies a voltage to the temperature sensor through ECM terminal THO1.
The sensor resistance changes with the transmission fluid temperature. As the temperature becomes higher, the sensor resistance decreases.
One terminal of the sensor is grounded so that the sensor resistance and the voltage decrease as the temperature becomes higher.
The ECM calculates the fluid temperature based on the voltage signal.

DTC No.	DTC Detection Conditions	Trouble Areas
P0710	(a) and (b) are detected momentarily within 0.5 seconds when neither P0712 nor P0713 is detected. (1-trip detection logic) (a) No. 1 ATF temperature sensor resistance is less than 79 Ω. (b) No. 1 ATF temperature sensor resistance is more than 156 kΩ. HINT: Within 0.5 seconds, the malfunction changes from (a) to (b) or from (b) to (a).	• Open or short in No. 1 ATF temperature sensor circuit • Transmission wire (No. 1 ATF temperature sensor) • ECM

AT

DTC No.	DTC Detection Conditions	Trouble Areas
P0712	No. 1 ATF temperature sensor resistance is less than 79 Ω for 0.5 seconds or more. (1-trip detection logic)	• Short in No. 1 ATF temperature sensor circuit • Transmission wire (No. 1 ATF temperature sensor) • ECM
P0713	No. 1 ATF temperature sensor resistance is more than 156 kΩ for 0.5 seconds or more 15 minutes or more after starting engine. (1-trip detection logic)	• Open in No. 1 ATF temperature sensor circuit • Transmission wire (No. 1 ATF temperature sensor) • ECM

MONITOR DESCRIPTION

These DTCs indicate an open or short in the Automatic Transmission Fluid (ATF) temperature sensor circuit.
The ATF temperature sensor converts ATF temperature to an electrical resistance value. Based on the resistance, the ECM determines the ATF temperature, and detects any open or short malfunctions in the ATF temperature circuit. If the resistance value of the ATF temperature is less than 79 Ω*1 or more than 156 kΩ*2, the ECM interprets this as a fault in the ATF sensor or its wiring. The ECM turns on the MIL and stores a DTC.
*1: 150°C (302°F) or more is indicated regardless of the actual ATF temperature.
*2: -40°C (-40°F) is indicated regardless of the actual ATF temperature.
HINT:
The ATF temperature can be checked on the intelligent tester display.

MONITOR STRATEGY

Related DTCs	P0710: ATF temperature sensor/Range check (Fluttering) P0712: ATF temperature sensor/Range check (Low resistance) P0713: ATF temperature sensor/Range check (High resistance)
Required sensors/Components	ATF temperature sensor
Frequency of operation	Continuous
Duration	0.5 seconds
MIL operation	Immediate
Sequence of operation	None

AT

TYPICAL ENABLING CONDITIONS

P0710: Range check (Fluttering)

The monitor will run whenever the following DTCs are not present.	None
The typical enabling condition is not available.	-

P0712: Range check (Low resistance)

The monitor will run whenever the following DTCs are not present.	None
The typical enabling condition is not available.	-

P0713: Range check (High resistance)

The monitor will run whenever the following DTCs are not present.	None
Time after engine start	15 minutes or more

TYPICAL MALFUNCTION THRESHOLDS

P0710: Range check (Fluttering)

ATF temperature sensor resistance	Less than 79 Ω or More than 156 kΩ

P0712: Range check (Low resistance)

ATF temperature sensor resistance	Less than 79 Ω

P0713: Range check (High resistance)

ATF temperature sensor resistance	More than 156 kΩ

COMPONENT OPERATING RANGE

ATF temperature sensor	Atmospheric temperature up to approximately 130°C (266°F)

WIRING DIAGRAM

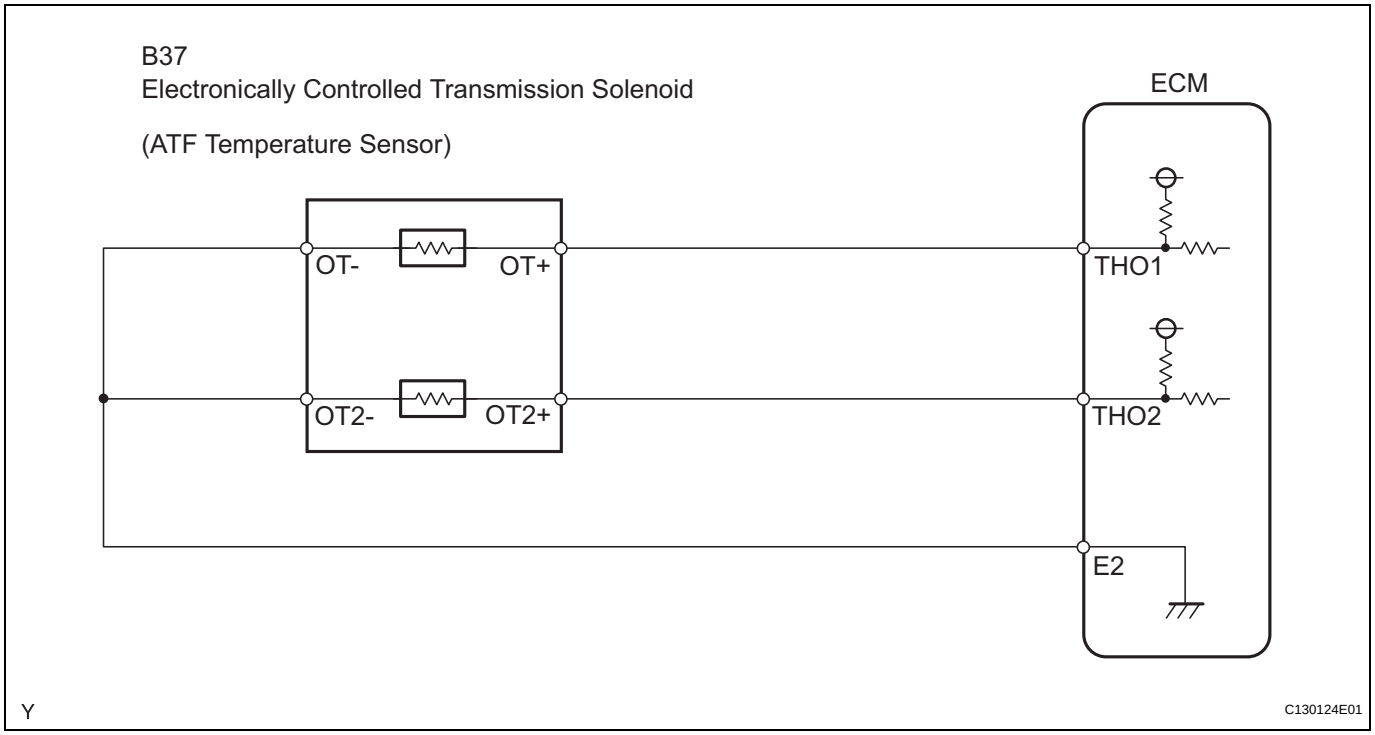

INSPECTION PROCEDURE

AT

HINT:

According to the DATA LIST displayed on the intelligent tester, you can read the values of components, such as the switches, sensors and actuators, without removing any parts. Reading the DATA LIST as a first step of troubleshooting is one method of shortening labor time.

NOTICE:

In the table below, the values listed under "Normal Condition" are for reference only. Do not depend solely on these reference values when judging whether a part is faulty or not.

1. Warm up the engine.
2. Turn the ignition switch off.
3. Connect the intelligent tester together with the CAN VIM (Controller Area Network Vehicle Interface Module) to the DLC3.
4. Turn the ignition switch to the ON position.
5. Push the "ON" button of the tester.
6. Select the items "DIAGNOSIS / ENHANCED OBD II / DATA LIST / A/T".
7. According to the display on the tester, read the "DATA LIST".

Item	Measurement Item/ Range (display)	Normal Condition
AT OIL TEMP1	No. 1 ATF Temperature Sensor Value/ min.: -40°C (-40°F) max.: 215°C (419°F)	• After Stall Test: Approximately 80°C (176°F) • Equal to ambient temperature during cold soak

HINT:
When DTC P0712 is output and intelligent tester reading is 150°C (302°F) or more, there is a short circuit.
When DTC P0713 is output and intelligent tester reading is -40°C (-40°F), there is an open circuit.
Measure the resistance between terminal THO1 and the body ground.

Temperature Displayed	Malfunction
-40°C (-40°F)	Open circuit
150°C (302°F) or more	Short circuit

HINT:
If a circuit related to the ATF temperature sensor becomes open, P0713 is immediately set (in 0.5 seconds). When P0713 is set, P0711 cannot be detected.
It is not necessary to inspect the circuit when P0711 is set.

1 INSPECT TRANSMISSION WIRE (ATF TEMPERATURE SENSOR)

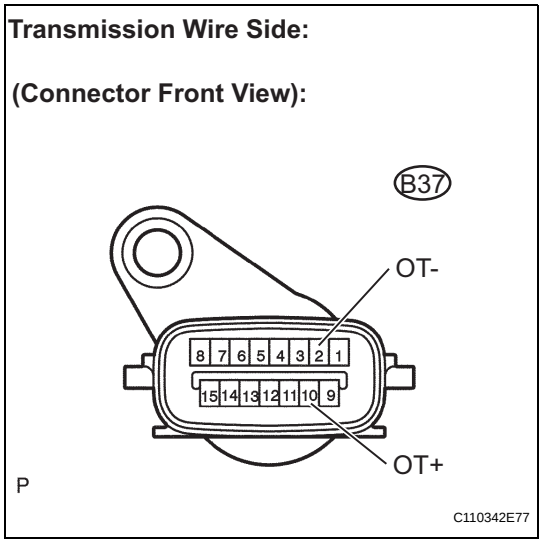

(a) Disconnect the transmission wire connector from the transmission.
(b) Measure the resistance.
Standard resistance

Tester Connection	Specified Condition
2 (OT-) - 10 (OT+)	79 Ω to 156 kΩ

(c) Measure the resistance.
Standard resistance (Check for short)

Tester Connection	Specified Condition
2 (OT-) - Body ground	10 kΩ or higher
10 (OT+) - Body ground	10 kΩ or higher

HINT:
If the resistance is outside the specified range at either of the ATF temperatures shown in the table below, the driveability of the vehicle may decrease.

ATF Temperature	Specified Condition
20°C (68°F)	3 to 5 kΩ
110°C (230°F)	0.22 to 0.28 kΩ

NG → **REPAIR OR REPLACE TRANSMISSION WIRE**

OK

AT

2	CHECK HARNESS AND CONNECTOR (TRANSMISSION WIRE - ECM)

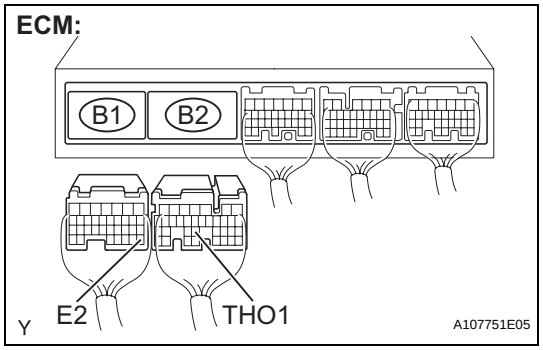

(a) Connect the transmission wire connector to the transmission.
(b) Disconnect the ECM connectors.
(c) Measure the resistance.
Standard resistance

Tester Connection	Specified Condition
B2-24 (THO1) - B1-28 (E2)	79 Ω to 156 kΩ

(d) Measure the resistance.
Standard resistance (Check for short)

Tester Connection	Specified Condition
B2-24 (THO1) - Body ground	10 kΩ or higher
B1-28 (E2) - Body ground	10 kΩ or higher

NG → **REPAIR OR REPLACE HARNESS OR CONNECTOR**

OK

REPLACE ECM

DTC	P0711	Transmission Fluid Temperature Sensor "A" Performance

DESCRIPTION

Refer to DTC P0710 (See page AT-51).

DTC No.	DTC Detection Conditions	Trouble Areas
P0711	Either of the following Condition (A) or (B) is met: Condition (A): All of (a), (b) and (c) are detected (2-trip detection logic): (a) Intake air and engine coolant temperatures are more than -10°C (14°F) at engine start. (b) After normal driving for over 6 minutes and 5.6 miles (9 km) or more, ATF temperature is less than 20°C (68°F). (c) 22 minutes or more have elapsed after engine start. Condition (B): Both (a) and (b) are detected (2-trip detection logic) (a) Engine coolant temperature is less than 35°C (95°F) at engine start. (b) ATF temperature is 110°C (230°F) or more when engine coolant temperature reaches 60°C (140°F).	• Transmission wire (No. 1 ATF temperature sensor) • ECM

MONITOR DESCRIPTION

This DTC indicates that there is a problem with the output from the ATF (Automatic Transmission Fluid) temperature sensor and that the sensor itself is defective. The ATF temperature sensor converts the ATF temperature to an electrical resistance value. Based on the resistance, the ECM determines the ATF temperature and detects any open or short malfunctions in the ATF temperature circuit or a fault of the ATF temperature sensor.

After running the vehicle for a certain period, the ATF temperature should increase. If the ATF temperature is below 20°C (68°F) after running the vehicle for a certain period, the ECM interprets this as a fault, and turns on the MIL.

When the ATF temperature is 110°C (230°F) or more and engine coolant temperature reaches 60°C (140°F) after cold start, the ECM also determines this as a fault, turns on the MIL, and stores the DTC.

AT

MONITOR STRATEGY

Related DTCs	P0711: ATF temperature sensor/Rationality check
Required sensors/Components	ATF temperature sensor
Frequency of operation	Continuous
Duration	Condition (A): 3 seconds Condition (B): 10 seconds
MIL operation	2 driving cycles
Sequence of operation	None

TYPICAL ENABLING CONDITIONS

The following conditions are common to Condition (A) and (B).

The monitor will run whenever the following DTCs are not present.	None
ATF temperature sensor "A" circuit	No circuit malfunction
ECT (Engine Coolant Temperature) sensor circuit	No circuit malfunction
IAT (Intake Air Temperature) sensor circuit	No circuit malfunction

Condition (A)

Time after engine start	21 minutes and 40 seconds or more

Driving distance after engine start	5.6 miles (9 km) or more
Accumulated driving time	5 minutes and 30 seconds or more
ECT	-15°C (5°F) or more
IAT (12 seconds after engine start)	-10°C (14°F) or more
ECT (12 seconds after engine start)	-10°C (14°F) or more

Condition (B)

ECT (Current temperature)	60°C (140°F) or more
ECT (12 seconds after engine start)	Less than 35°C (95°F)
ATF temperature (12 seconds after engine start)	110°C (230°F) or more

TYPICAL MALFUNCTION THRESHOLDS

Either of the following conditions is met: Condition (A) or (B)

Condition (A)

ATF temperature	Less than 20°C (68°F) (Conditions vary with ATF temperature at engine start)

Condition (B)

ATF temperature	110°C (230°F) or more

WIRING DIAGRAM

Refer to DTC P0710 (See page AT-53).

INSPECTION PROCEDURE

HINT:

According to the DATA LIST displayed on the intelligent tester, you can read the values of components, such as the switches, sensors and actuators, without removing any parts. Reading the DATA LIST as a first step of troubleshooting is one method of shortening labor time.

NOTICE:

In the table below, the values listed under "Normal Condition" are for reference only. Do not depend solely on these reference values when judging whether a part is faulty or not.

1. Warm up the engine.
2. Turn the ignition switch off.
3. Connect the intelligent tester together with the CAN VIM (Controller Area Network Vehicle Interface Module) to the DLC3.
4. Turn the ignition switch to the ON position.
5. Push the "ON" button of the tester.
6. Select the items "DIAGNOSIS / ENHANCED OBD II / DATA LIST / A/T".
7. According to the display on the tester, read the "DATA LIST".

Item	Measurement Item/ Range (display)	Normal Condition
AT OIL TEMP1	No. 1 ATF Temperature Sensor Value/ min.: -40°C (-40°F) max.: 215°C (419°F)	• After Stall Test: Approximately 80°C (176°F) • Equal to ambient temperature during cold soak

HINT:

When DTC P0712 is output and intelligent tester reading is 150°C (302°F) or more, there is a short circuit.

When DTC P0713 is output and intelligent tester reading is -40°C (-40°F), there is an open circuit.

Measure the resistance between terminal THO1 and the body ground.

Temperature Displayed	Malfunction
-40°C (-40°F)	Open circuit
150°C (302°F) or more	Short circuit

HINT:
If a circuit related to the ATF temperature sensor becomes open, P0713 is immediately set (in 0.5 seconds). When P0713 is set, P0711 cannot be detected.
It is not necessary to inspect the circuit when P0711 is set.

1	CHECK ANY OTHER DTCS OUTPUT (IN ADDITION TO DTC P0711)

(a) Connect the intelligent tester to the DLC3.
(b) Turn the ignition switch to the ON position and push the intelligent tester main switch ON.
(c) Select the items "DIAGNOSIS / ENHANCED OBD II / DTC INFO / CURRENT CODES".
(d) Read the DTCs using the intelligent tester.

Result:

Display (DTC Output)	Proceed to
Only "P0711" is output	A
"P0711" and other DTCs	B

HINT:
If any codes besides "P0711" are output, perform troubleshooting for those DTCs first.

B → **GO TO DTC CHART**

A

2	CHECK TRANSMISSION FLUID LEVEL

OK:
Automatic transmission fluid level is correct.

NG → **ADD FLUID**

AT

OK

REPLACE TRANSMISSION WIRE (ATF TEMPERATURE SENSOR)

DTC	P0717	Input Speed Sensor Circuit No Signal

DESCRIPTION

This sensor detects the rotation speed of the turbine which shows the input revolution of the transmission. By comparing the input turbine speed signal (NT) with the counter gear speed sensor signal (SP2), the ECM detects the shift timing of the gears and appropriately controls the engine torque and hydraulic pressure according to various conditions, providing smooth gear shifts.

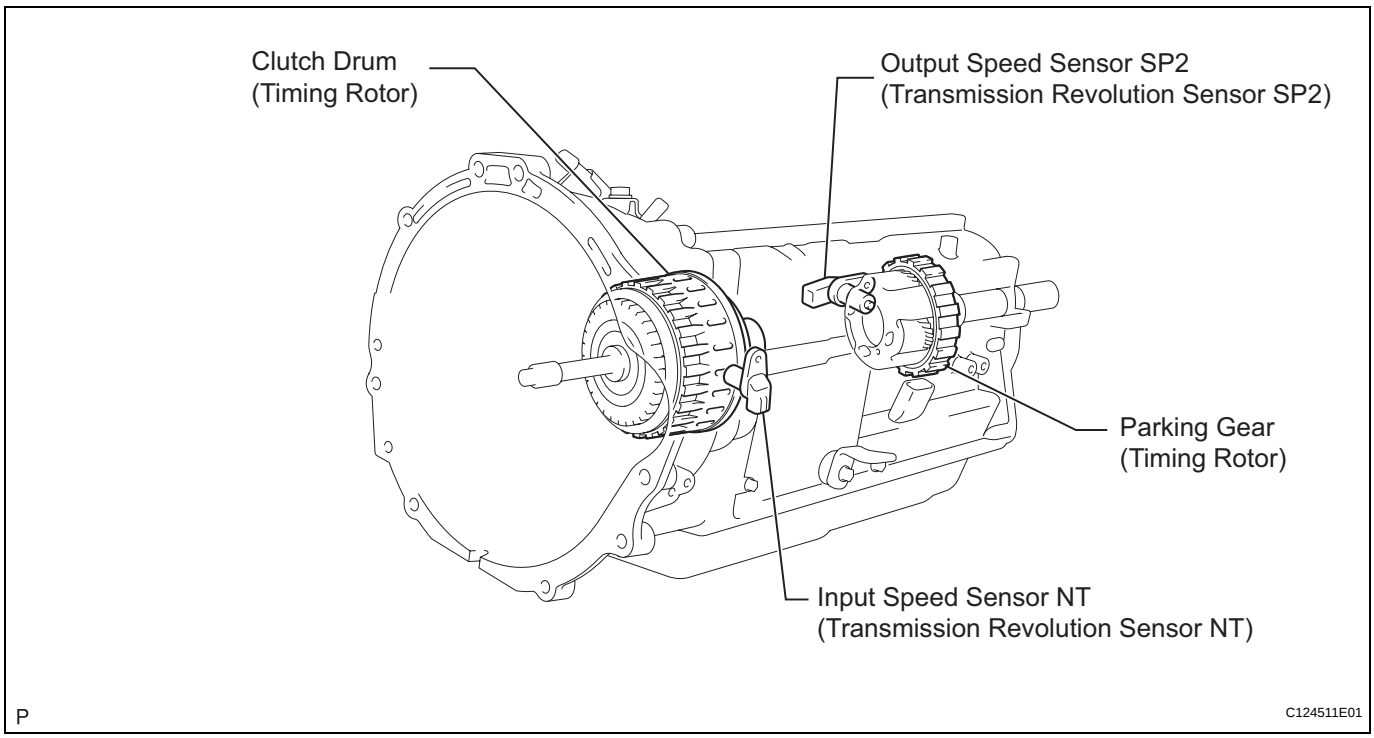

DTC No.	DTC Detection Conditions	Trouble Areas
P0717	All conditions below are detected for 5 seconds or more. (1-trip detection logic) (a) Gear change is not being performed. (b) Gear position: 4th or 5th (c) T/M input shaft rpm: 300 rpm or less (d) T/M output shaft rpm: 1,000 rpm or more (e) Park/neutral position switch (NSW, R and L) is OFF (f) Shift solenoid valves, park/neutral position switch and vehicle speed sensor are in normal operation.	• Open or short in speed sensor (NT) circuit • Speed sensor (NT) • ECM

AT

Reference (Using an oscilloscope):

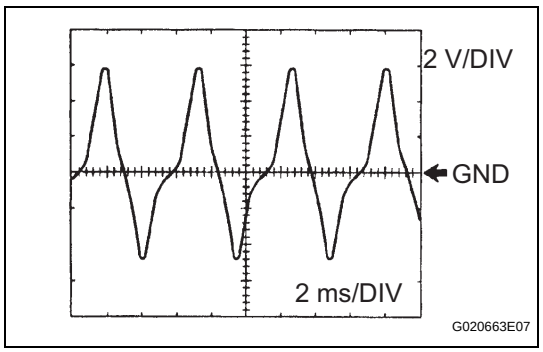

Check the waveform between terminals NT+ and NT- of the ECM connector.

Standard:

Refer to the illustration.

Item	Condition
Terminal	NT+ - NT-
Tool setting	2 V/DIV, 2 ms/DIV
Vehicle condition	Engine idling speed (P or N position)

MONITOR DESCRIPTION

This DTC indicates that a pulse is not output from the speed sensor NT (Turbine (input) speed sensor) or is weak. The NT terminal of the ECM detects the revolution signal from the speed sensor (NT) (input RPM). The ECM outputs a gearshift signal comparing the input speed sensor (NT) with the output speed sensor (SP2). While the vehicle is operating in the 4th or 5th gear position in the shift position of D, if the input shaft revolution is less than 300 rpm*1 although the output shaft revolution is more than 1,000 rpm or more*2, the ECM detects the trouble, illuminates the MIL and stores the DTC.
*1: Pulse is not output or is irregularly output.
*2: The vehicle speed is approximately 31 mph (50 km/h) or more.

MONITOR STRATEGY

Related DTCs	P0717: Speed sensor (NT)/Verify pulse input
Required sensors/Components (Main)	Speed sensor (NT)
Required sensors/Components (Related)	Speed sensor (SP2)
Frequency of operation	Continuous
Duration	5 seconds
MIL operation	Immediate
Sequence of operation	None

TYPICAL ENABLING CONDITIONS

The monitor will run whenever the following DTCs are not present.	P0500: VSS P0748 - P0799: Trans solenoid (range)
Shift change	Each shift change is completed before starting next shift change operation
ECM selected gear	4th or 5th
Output shaft rpm	1,000 rpm or more
Park/neutral position switch	OFF
R switch	OFF
L switch	OFF
Engine	Running
Ignition Switch	ON
Starter	OFF

TYPICAL MALFUNCTION THRESHOLDS

Sensor signal rpm	Less than 300 rpm

COMPONENT OPERATING RANGE

Speed sensor (NT)	Input speed is equal to engine speed when lock-up ON

WIRING DIAGRAM

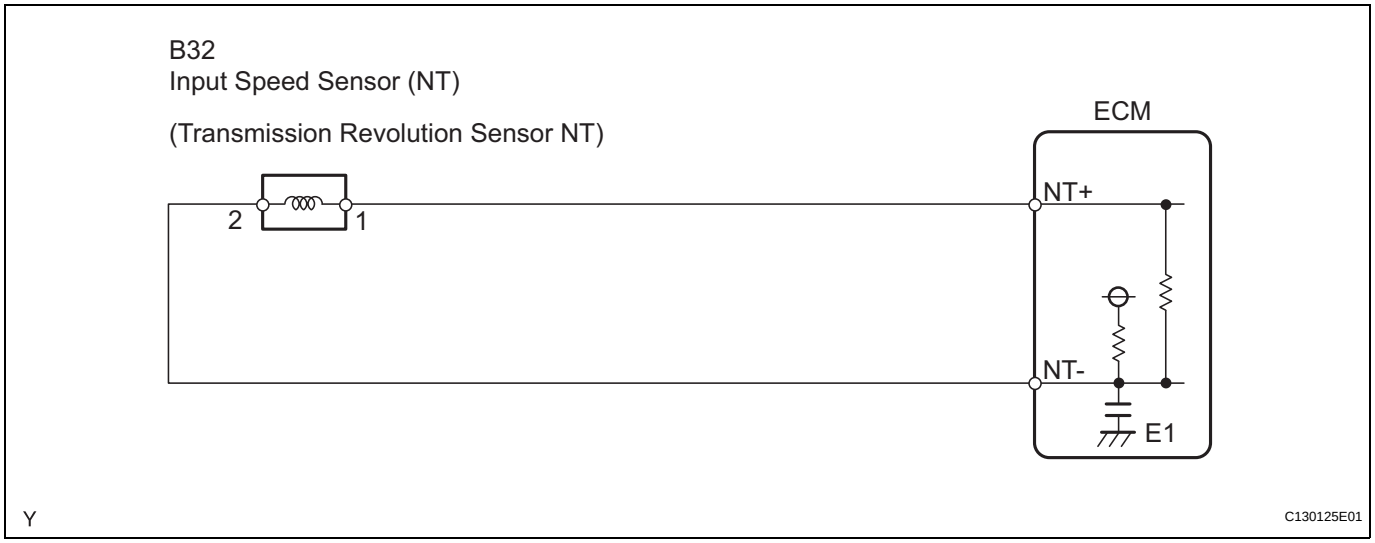

INSPECTION PROCEDURE

HINT:
According to the DATA LIST displayed on the intelligent tester, you can read the values of components, such as the switches, sensors and actuators, without removing any parts. Reading the DATA LIST as a first step of troubleshooting is one method of shortening labor time.

1. Warm up the engine.
2. Turn the ignition switch off.
3. Connect the intelligent tester together with the CAN VIM (Controller Area Network Vehicle Interface Module) to the DLC3.
4. Turn the ignition switch to the ON position.
5. Push the "ON" button of the tester.
6. Select the items "DIAGNOSIS / ENHANCED OBD II / DATA LIST / A/T".
7. According to the display on the tester, read the "DATA LIST".

AT

Item	Measurement Item/ Range (display)	Normal Condition
SPD (NT)	Input Turbine Speed/ display: 50 rpm	[HINT] • Lock-up ON (After warming up the engine); Input turbine speed (NT) equal to the engine speed. • Lock-up OFF (Idling at N position); Input turbine speed (NT) nearly equal to the engine speed.

HINT:

- SPD (NT) is always 0 while driving:
  Open or short in the sensor or circuit.
- SPD (NT) is always less than 300 rpm while driving the vehicle at 31 mph (50 km/h) or more:
  Sensor trouble, improper installation, or intermittent connection trouble of the circuit.

1 INSPECT SPEED SENSOR (NT) INSTALLATION

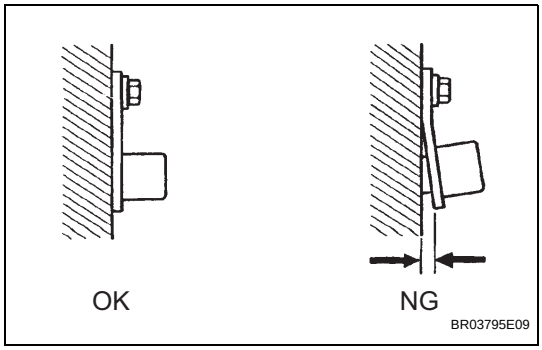

(a) Check the speed sensor (NT) installation.
OK:
The installation bolt is tightened properly and there is no clearance between the sensor and transmission case.

NG → **SECURELY INSTALL OR REPLACE SPEED SENSOR (NT)**

OK

2 INSPECT SPEED SENSOR (NT)

Sensor Side:

(Connector Front View):

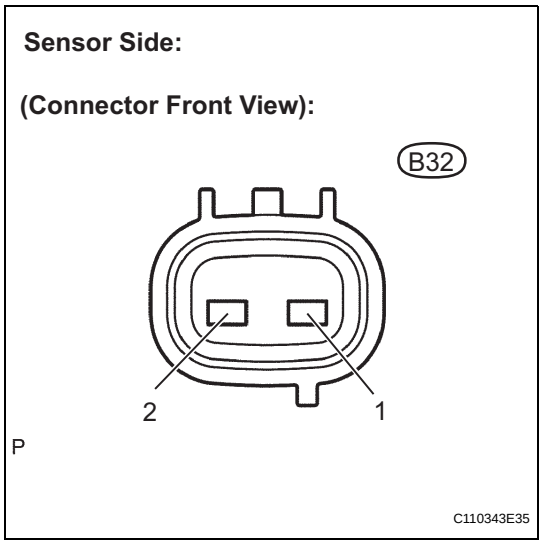

(a) Disconnect the speed sensor (NT) connector from the transmission.
(b) Measure the resistance.
Standard resistance

Tester Connection	Specified Condition
1 - 2	560 to 680 Ωat 20°C (68°F)

NG → **REPLACE SPEED SENSOR (NT)**

OK

3 CHECK HARNESS AND CONNECTOR (SPEED SENSOR (NT) - ECM)

ECM:

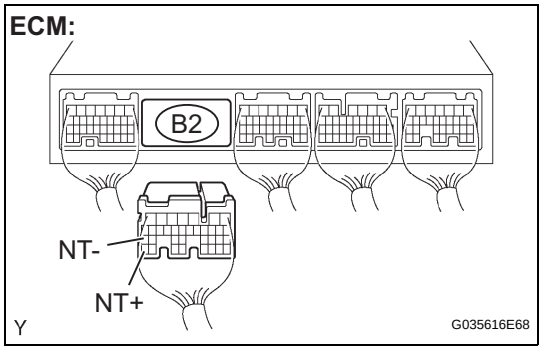

(a) Connect the speed sensor (NT) connector.
(b) Disconnect the ECM connector.
(c) Measure the resistance.
Standard resistance

Tester Connection	Specified Condition
B2-35 (NT+) - B2-27 (NT-)	560 to 680 Ω at 20°C (68°F)

(d) Measure the resistance.
Standard resistance (Check for short)

Tester Connection	Specified Condition
B2-35 (NT+) - Body ground	10 kΩ or higher
B2-27 (NT-) - Body ground	10 kΩ or higher

AT

NG → REPAIR OR REPLACE HARNESS OR CONNECTOR

OK

REPLACE ECM

DTC	P0722	Output Speed Sensor Circuit No Signal

DESCRIPTION

The speed sensor SP2 detects the rotation speed of the transmission output shaft and sends signals to the ECM. The ECM determines the vehicle speed based on these signals. An AC voltage is generated in the speed sensor SP2 coil as the parking gear mounted on the rear planetary gear assembly rotates, and this voltage is sent to the ECM. The parking gear on the rear planetary gear is used as the timing rotor for this sensor. The gear shift point and lock-up timing are controlled by the ECM based on the signals from the vehicle speed sensor and the throttle position sensor.

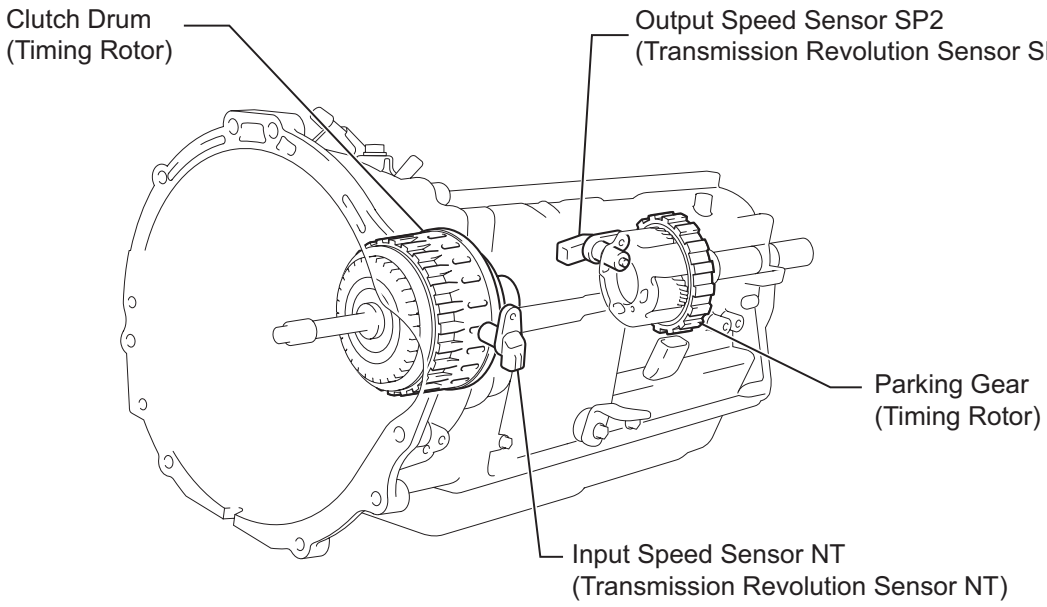

AT

DTC No.	DTC Detection Conditions	Trouble Areas
P0722	All conditions below are detected 500 times or more continuously. (1-trip detection logic) (a) No signal from speed sensor (SP2) is input to ECM while 4 pulses of No. 1 vehicle speed sensor signal are sent. (b) Vehicle speed is 5.6 mph (9 km/h) or more for at least 4 seconds. (c) Park/neutral position switch is OFF.	• Open or short in speed sensor (SP2) circuit • Speed sensor (SP2) • ECM

Reference (Using an oscilloscope):

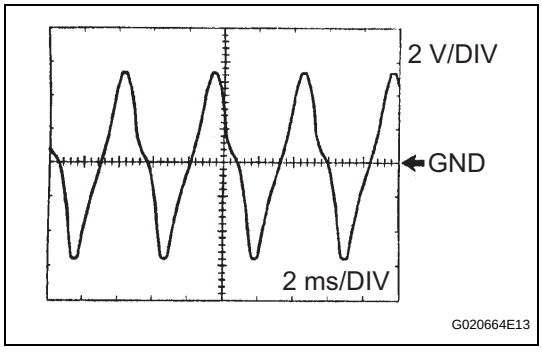

Check the waveform between terminals SP2+ and SP2- of the ECM connector.

Standard:

Refer to the illustration.

Item	Condition
Terminal	**SP2+ - SP2-**
Tool setting	**2 V/DIV, 2 ms/DIV**
Vehicle condition	**Vehicle speed 12 mph (20 km/h)**

MONITOR DESCRIPTION

The output speed sensor monitors the output shaft speed. The ECM controls the gearshift point and the lock up timing based on the signals from the output speed sensor and throttle position sensor.
If the ECM detects no signal from the output shaft speed sensor even while the vehicle is moving, it will conclude that is a malfunction in the output speed sensor. The ECM will illuminate the MIL and set the DTC.

MONITOR STRATEGY

Related DTCs	P0722: Speed sensor SP2/Verify pulse input
Required sensors/Components	Speed sensor SP2
Frequency of operation	Continuous
Duration	500 output shaft revolutions
MIL operation	Immediate
Sequence of operation	None

TYPICAL ENABLING CONDITIONS

The monitor will run whenever the following DTCs are not present.	P0500: VSS P0748 - P0799: Trans solenoid (range)
Vehicle speed sensor pulse input	4 times
Vehicle speed range (4 seconds or more)	5.6 mph (9 km/h) or more
Park/neutral position switch	OFF
Battery voltage	8 V or more
Ignition switch	ON
Starter	OFF

TYPICAL MALFUNCTION THRESHOLDS

Output speed sensor pulse input	No input

WIRING DIAGRAM

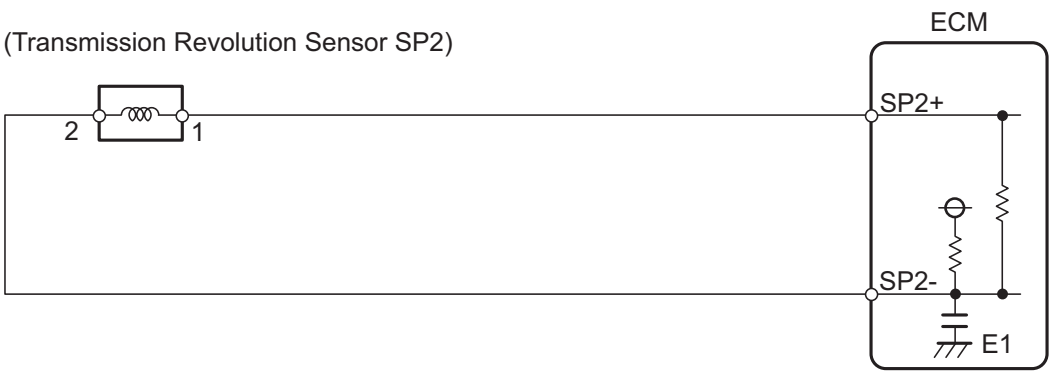

INSPECTION PROCEDURE

HINT:
According to the DATA LIST displayed on the intelligent tester, you can read the values of components, such as the switches, sensors and actuators, without removing any parts. Reading the DATA LIST as a first step of troubleshooting is one method of shortening labor time.

NOTICE:

In the table below, the values listed under "Normal Condition" are for reference only. Do not depend solely on these reference values when judging whether a part is faulty or not.

1. Connect the intelligent tester together with the CAN VIM (Controller Area Network Vehicle Interface Module) to the DLC3.
2. Turn the ignition switch to the ON position.
3. Push the "ON" button of the tester.
4. Select the items "DIAGNOSIS / ENHANCED OBD II / DATA LIST / A/T".
5. According to the display on the tester, read the "DATA LIST".

AT

Item	Measurement Item/ Range (display)	Normal Condition
SPD (SP2)	Counter Gear Speed display/ min.: 0 mph (0 km/h) max.: 158 mph (255 km/h)	Vehicle stopped: 0 mph (0 km/h) [HINT] Equal to vehicle speed

HINT:

- SPD (SP2) is always 0 while driving:
  Open or short in the sensor or circuit.
- The SPD (SP2) value displayed on the tester is much lower than the actual vehicle speed:
  Sensor trouble, improper installation, or intermittent connection trouble of the circuit.

1 INSPECT SPEED SENSOR (SP2) INSTALLATION

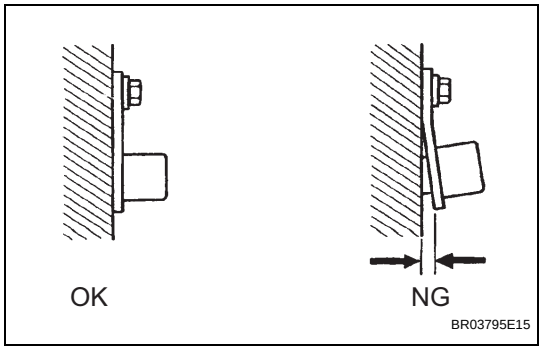

(a) Check the speed sensor (SP2) installation.
OK:
The installation bolt is tightened properly and there is no clearance between the sensor and transmission case.

NG → **SECURELY INSTALL OR REPLACE SPEED SENSOR (SP2)**

OK

2 INSPECT SPEED SENSOR (SP2)

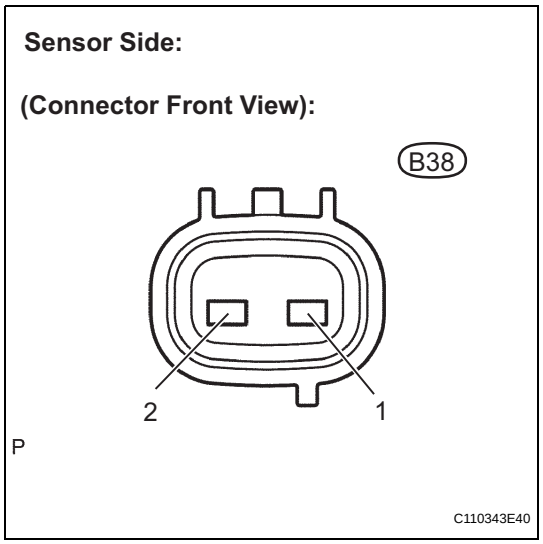

(a) Disconnect the speed sensor (SP2) connector from the transmission.
(b) Measure the resistance.
Standard resistance

Tester Connection	Specified Condition
1 - 2	560 to 680 Ω at 20°C (68°F)

NG → **REPLACE SPEED SENSOR (SP2)**

OK

3 CHECK HARNESS AND CONNECTOR (SPEED SENSOR (SP2) - ECM)

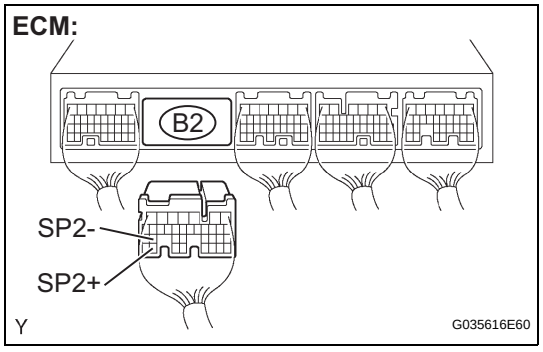

(a) Connect the speed sensor connector.
(b) Disconnect the ECM connector.
(c) Measure the resistance.
Standard resistance

Tester Connection	Specified Condition
B2-34 (SP2+) - B2-26 (SP2-)	560 to 680 Ω at 20°C (68°F)

(d) Measure the resistance.
Standard resistance (Check for short)

Tester Connection	Specified Condition
B2-34 (SP2+) - Body ground	10 kΩ or higher
B2-26 (SP2-) - Body ground	10 kΩ or higher

AT

NG → **REPAIR OR REPLACE HARNESS OR CONNECTOR**

OK

REPLACE ECM

DTC	P0748	Pressure Control Solenoid "A" Electrical (Shift Solenoid Valve SL1)

DESCRIPTION

Shifting from 1st to 5th is performed in combination with the ON and OFF operations of the shift solenoid valves S1, S2, SR, SL1 and SL2 which are controlled by the ECM. If an open or short circuit occurs in any of the shift solenoid valves, the ECM controls the remaining normal shift solenoid valves to allow the vehicle to be driven smoothly (See page AT-34).

DTC No.	DTC Detection Conditions	Trouble Areas
P0748	The ECM checks for an open or short in the shift solenoid valve SL1 circuit. (1-trip detection logic) • Output signal duty equals to 100 %. (NOTE: SL1 output signal duty is less than 100 % under normal condition.)	• Open or short in shift solenoid valve SL1 circuit • Shift solenoid valve SL1 • ECM

MONITOR DESCRIPTION

This DTC indicates an open or short in the shift solenoid valve SL1 circuit. The ECM controls the gearshift by turning the shift solenoid valves "ON/OFF". When there is an open or short circuit in any shift solenoid valve circuit, the ECM detects the problem, illuminates the MIL and stores the DTC. And the ECM performs the fail-safe function and turns the other functioning shift solenoid valves "ON/OFF". (If an open or short circuit is detected, the ECM cuts the current to the circuit.)
If the ECM detects an open or short in the shift solenoid valve SL1 circuit, the ECM determines that there is a malfunction (See page AT-34).

MONITOR STRATEGY

Related DTCs	P0748 : Shift solenoid valve SL1/Range check
Required sensors/Components	Shift solenoid valve SL1
Frequency of operation	Continuous
Duration	1 second
MIL operation	Immediate
Sequence of operation	None

AT

TYPICAL ENABLING CONDITIONS

The monitor will run whenever the following DTCs are not present.	None
Battery voltage	10 V or more
CPU commanded duty	Less than 75 %
Ignition switch	ON
Starter	OFF

TYPICAL MALFUNCTION THRESHOLDS

Output signal duty	100 %

COMPONENT OPERATING RANGE

Output signal duty	Less than 100 %

WIRING DIAGRAM

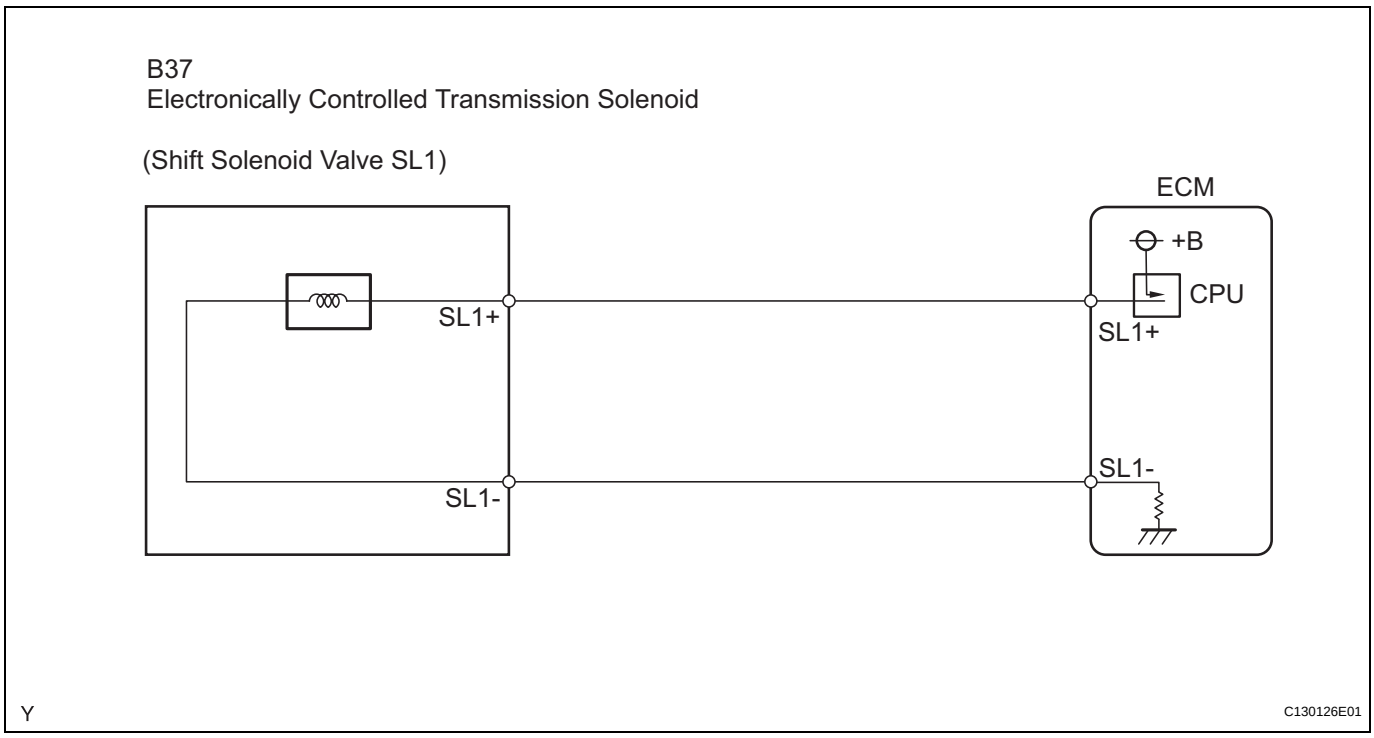

INSPECTION PROCEDURE

HINT:

The shift solenoid valve SL1 is turned on/off normally when the shift lever is in the D position:

Gearshift controlled by ECM	1st	2nd	3rd	4th	5th
Shift solenoid valve SL1	OFF	OFF	OFF	OFF	ON

AT

1 INSPECT TRANSMISSION WIRE (SL1)

Transmission Wire Side:

(Connector Front View):

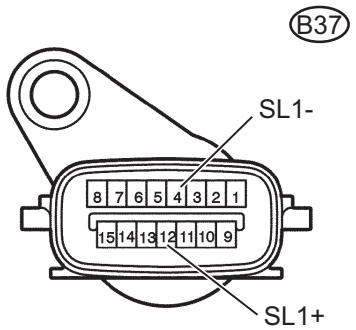

(a) Disconnect the transmission wire connector from the transmission.

(b) Measure the resistance.

Standard resistance

Tester Connection	Specified Condition
12 (SL1+) - 4 (SL1-)	5.0 to 5.6 Ωat 20°C (68°F)

(c) Measure the resistance.

Standard resistance (Check for short)

Tester Connection	Specified Condition
12 (SL1+) - Body ground	10 kΩ or higher
4 (SL1-) - Body ground	10 kΩ or higher

NG → **Go to step 3**

OK

2 CHECK HARNESS AND CONNECTOR (TRANSMISSION WIRE - ECM)

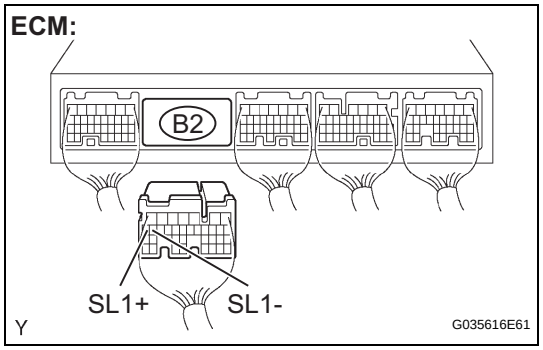

(a) Connect the transmission connector to the transmission.
(b) Disconnect the connector from the ECM.
(c) Measure the resistance.
Standard resistance

Tester Connection	Specified Condition
B2-19 (SL1+) - B2-18 (SL1-)	5.0 to 5.6 Ω at 20°C (68°F)

(d) Measure the resistance.
Standard resistance (Check for short)

Tester Connection	Specified Condition
B2-19 (SL1+) - Body ground	10 kΩ or higher
B2-18 (SL1-) - Body ground	10 kΩ or higher

NG → **REPAIR OR REPLACE HARNESS OR CONNECTOR**

OK

REPLACE ECM

3 INSPECT SHIFT SOLENOID VALVE SL1

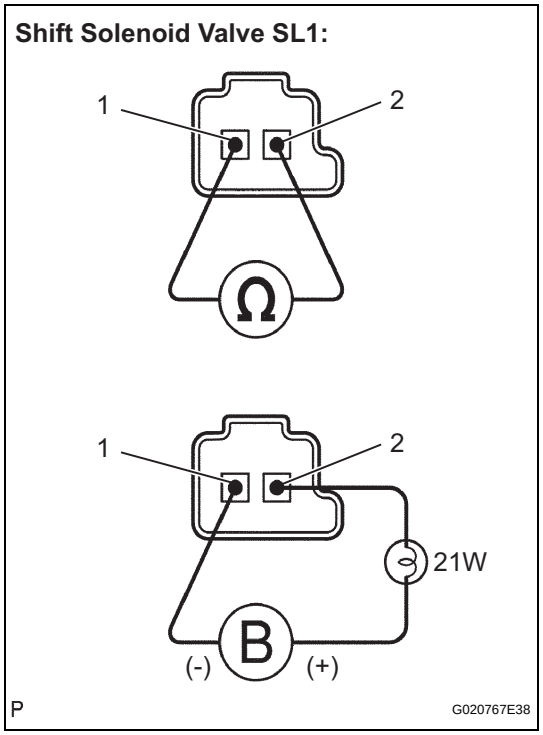

(a) Remove the shift solenoid valve SL1.
(b) Measure the resistance.
Standard resistance

Tester Connection	Specified Condition
1 - 2	5.0 to 5.6 Ω at 20°C (68°F)

(c) Connect the positive (+) lead with a 21 W bulb to terminal 2 and the negative (-) lead to terminal 1 of the solenoid valve connector, then check the movement of the valve.
OK:
The solenoid makes operating sounds.

NG → **REPLACE SHIFT SOLENOID VALVE SL1**

OK

REPAIR OR REPLACE TRANSMISSION WIRE

AT

DTC	P0751	Shift Solenoid "A" Performance (Shift Solenoid Valve S1)

DESCRIPTION

The ECM uses signals from the output shaft speed sensor and input speed sensor to detect the actual gear position (1st, 2nd, 3rd, 4th or 5th gear).
Then the ECM compares the actual gear with the shift schedule in the ECM memory to detect mechanical problems of the shift solenoid valves, valve body or automatic transmission (clutch, brake or gear, etc.).

DTC No.	DTC Detection Conditions	Trouble Areas
P0751	S1 stuck ON malfunction*1: The ECM determines that there is a malfunction when the following conditions are met (2-trip detection logic): (a) When the ECM directs the gearshift to switch to 4th gear, the actual gear is shifted to 1st. (b) When the ECM directs the gearshift to switch to 1st gear, the actual gear is also shifted to 1st.	• Shift solenoid valve S1 remains open • Shift solenoid valve SLT remains open or closed • Valve body is blocked • Automatic transmission (clutch, brake or gear, etc.)
	S1 stuck OFF malfunction*2: The ECM determines that there is a malfunction when the following conditions are met (2-trip detection logic): (a) When the ECM directs the gearshift to switch to 1st gear, the actual gear is shifted to 4th. (b) When the ECM directs the gearshift to switch to 5th gear, the actual gear is also shifted to 5th.	• Shift solenoid valve S1 remains closed • Shift solenoid valve SLT remains open or closed • Valve body is blocked • Automatic transmission (clutch, brake or gear, etc.)

HINT:
Gear positions in the event of a solenoid valve mechanical problem:

Gearshift controlled by ECM	1st	2nd	3rd	4th	5th
*1: Actual gear position under S1 stuck ON malfunction	1st	2nd	2nd	1st	N*
*2: Actual gear position under S1 stuck OFF malfunction	4th	3rd	3rd	4th	5th

N*: Neutral

AT

MONITOR DESCRIPTION

This DTC indicates "stuck ON malfunction" or "stuck OFF malfunction" of the shift solenoid valve S1. The ECM controls the gearshifts by turning the shift solenoid valves "ON/OFF". When the gear position directed by the ECM and the actual gear position do not match, the ECM illuminates the MIL and stores the DTC.

MONITOR STRATEGY

Related DTCs	P0751: Shift solenoid valve S1/OFF malfunction Shift solenoid valve S1/ON malfunction
Required sensors/Components (Main)	Shift solenoid valve S1
Required sensors/Components (Related)	Vehicle speed sensor, Throttle position sensor, Speed sensor (NT), Speed sensor (SP2)
Frequency of operation	Continuous
Duration	OFF malfunctions (A) and (B): 0.4 seconds OFF malfunction (C): Immediate ON malfunctions (A), (B) and (C): 0.4 seconds ON malfunction (D): 3 seconds ON malfunction (E): 0.5 seconds
MIL operation	2 driving cycles

Sequence of operation	None

TYPICAL ENABLING CONDITIONS

The following conditions are common to all OFF malfunctions (A), (B) and (C) and ON malfunctions (A), (B), (C), (D) and (E).

The monitor will run whenever the following DTCs are not present.	P0115 - P0118: ECT sensor P0125: Insufficient ECT for Closed Loop P0500: VSS P0748 - P0799: Trans solenoid (range)
Turbine speed sensor (NT) circuit	No circuit malfunction
Output speed sensor (SP2) circuit	No circuit malfunction
Shift solenoid "A" (S1) circuit	No circuit malfunction
Shift solenoid "B" (S2) circuit	No circuit malfunction
Shift solenoid "E" (SR) circuit	No circuit malfunction
Pressure control solenoid "A" (SL1) circuit	No circuit malfunction
Pressure control solenoid "B" (SL2) circuit	No circuit malfunction
ECT (Engine Coolant Temperature) sensor circuit	No circuit malfunction
Knock sensor circuit	No circuit malfunction
ETCS (Electronic Throttle Control System)	System not down
Transmission shift position	"D"
ECT	40°C (104°F) or more
Spark advance from max. retard timing by knock sensor control	0° CA or more
Engine	Starting

OFF malfunction (A)

ECM selected gear	1st
Vehicle speed	1.2 to 24.9 mph (2 to 40 km/h)
Throttle valve opening angle	8 % or more and 6.5 % or more at engine speed of 2,000 rpm (Conditions vary with engine speed)

OFF malfunction (B)

Current ECM selected gear	5th
Last ECM selected gear	4th
Continuous time of ECM selecting 4th gear	2 seconds or more
Actual gear when ECM selected 4th gear	4th

OFF malfunction (C)

Current ECM selected gear	5th
Last ECM selected gear	4th

ON malfunction (A)

ECM selected gear	1st
Vehicle speed	1.2 to 24.9 mph (2 to 40 km/h)
Throttle valve opening angle	6.5 % or more at engine speed of 2,000 rpm (Conditions vary with engine speed)

ON malfunction (B)

ECM selected gear	4th
Vehicle speed	1.2 mph (2 km/h) or more
Throttle valve opening angle	6.5 % or more at engine speed of 2,000 rpm (Conditions vary with engine speed)

ON malfunction (C)

ECM selected gear	3rd
Vehicle speed	1.2 mph (2 km/h) or more
Throttle valve opening angle	6.5 % or more at engine speed of 2,000 rpm (Conditions vary with engine speed)

ON malfunction (D)

Current ECM selected gear	5th
Last ECM selected gear	4th
Vehicle speed (During transition from 4th to 5th gear)	Less than 62.2 mph (100 km/h)

ON malfunction (E)

ECM selected gear	5th
Engine speed - Turbine speed (NE - NT) (After transition from 4th to 5th gear)	150 rpm or less
Vehicle speed (After transition from 4th to 5th gear)	Less than 62.2 mph (100 km/h)

TYPICAL MALFUNCTION THRESHOLDS

[OFF malfunction]
All of the following conditions are met: OFF malfunctions (A), (B) and (C)
2 detections are necessary in 1 driving cycle.
1st detection; temporary flag ON
2nd detection; pending fault code ON

OFF malfunction (A)

Turbine speed/Output speed	0.93 to 1.07 (Actual gear is 4th)

OFF malfunction (B)

Turbine speed/Output speed	0.65 to 0.79 (Actual gear is 5th)

AT

OFF malfunction (C)

Output record from ECM for 4th → 5th upshifting	Recorded

[ON malfunction]
Either of the following conditions is met:

- ON malfunctions (A) and (B)
- ON malfunction (B) or (C) and ON malfunction (D) or (E)

ON malfunction (A)

Turbine speed/Output speed	3.30 to 7.50 (Actual gear is 1st)

ON malfunction (B)

Turbine speed/Output speed	3.30 to 7.50 (Actual gear is 1st)

ON malfunction (C)

Turbine speed/Output speed	1.91 to 2.35 (Actual gear is 2nd)

ON malfunction (D)

Turbine speed - Output speed x 4th gear ratio	1,000 rpm or more

ON malfunction (E)

Turbine speed - Output speed x 5th gear ratio	1,000 rpm or more

INSPECTION PROCEDURE

HINT:
Performing the ACTIVE TEST using the intelligent tester allows components, such as the relay, VSV, and actuator, to be operated without removing any parts. Performing the ACTIVE TEST as a first step of troubleshooting is one method of shortening labor time.
It is possible to display the DATA LIST during the ACTIVE TEST.

1. Warm up the engine.
2. Turn the ignition switch off.
3. Connect the intelligent tester together with the CAN VIM (Controller Area Network Vehicle Interface Module) to the DLC3.
4. Turn the ignition switch to the ON position.
5. Push the "ON" button of the tester.
6. Clear the DTC.
7. Select the items "DIAGNOSIS / ENHANCED OBD II / ACTIVE TEST / SHIFT".
8. According to the display on the tester, perform the "ACTIVE TEST".

HINT:
While driving, the shift position can be changed with the intelligent tester.
Comparing the shift position directed by the ACTIVE TEST with the actual shift position enables the problem to be confirmed (See page AT-34).

Item	Test Details	Diagnostic Note
SHIFT	[Test Details] Operate the shift solenoid valve and set each shift position manually. [Vehicle Condition] Vehicle Speed: Less than 30 mph (50 km/h) [Others] • Press → button: Shift up • Press ← button: Shift down	Possible to check the operation of the shift solenoid valves. HINT: Shifting to the 5th gear is possible only when the vehicle is stationary with the engine idling.

HINT:

- This test can be conducted when the vehicle speed is 30 mph (50 km/h) or less.
- The 4th to 5th up-shifting must be performed with the accelerator pedal released.
- The 5th to 4th down-shifting must be performed with the accelerator pedal released.
- Do not operate the accelerator pedal for at least 2 seconds after shifting and do not shift successively.
- The shift position directed by the ECM is shown in the DATA LIST / SHIFT display on the intelligent tester.
- The shift solenoid valve S1 is turned on/off normally when the shift lever is in the D position:

Gearshift controlled by ECM	1st	2nd	3rd	4th	5th
Shift solenoid valve S1	ON	ON	OFF	OFF	OFF

AT

1	CHECK ANY OTHER DTCS OUTPUT (IN ADDITION TO DTC P0751)

(a) Connect the the intelligent tester to the DLC3.
(b) Turn the ignition switch to the ON position and push the intelligent tester main switch ON.
(c) Select the items "DIAGNOSIS / ENHANCED OBD II / DTC INFO / CURRENT CODES".
(d) Read the DTCs using the intelligent tester.

Result:

Display (DTC Output)	Proceed to
Only "P0751" is output	A
"P0751" and other DTCs	B

HINT:
If any codes besides "P0751" are output, perform troubleshooting for those DTCs first.

B → GO TO DTC CHART

A

2 PERFORM ACTIVE TEST USING INTELLIGENT TESTER (SOLENOID (SLT))

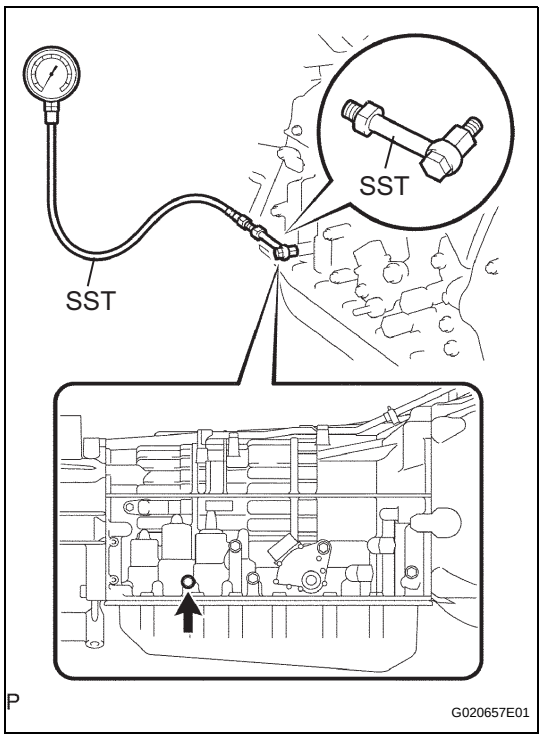

NOTICE:
- **Perform the test at the normal operating ATF (Automatic Transmission Fluid) temperature: 50 to 80°C (122 to 176°F).**
- **Be careful to prevent SST's hose from interfering with the exhaust pipe.**
- **Perform the test with the A/C OFF.**

HINT:
Performing the intelligent tester's ACTIVE TEST allows relay, VSV, actuator and other items to be operated without removing any parts. Performing the ACTIVE TEST early in troubleshooting is one way to save time.
The DATA LIST can be displayed during the ACTIVE TEST.

(a) Remove the test plug on the transmission case center right side and connect SST.
SST 09992-00095 (09992-00231, 09992-00271)
(b) Connect the intelligent tester to the DLC3.
(c) Start the engine and warm it up.
(d) Measure the line pressure with SST.
(e) Turn the intelligent tester ON.
(f) Enter the following menus: DIAGNOSIS / ENHANCED OBD II / ACTIVE TEST.
(g) Follow the instructions on the tester and perform the ACTIVE TEST.
(h) Measure the line pressure with SST.

AT

Item	Test Details	Diagnostic Note
SOLENOID (SLT)*	[Test Details] Operate shift solenoid SLT and raise line pressure. [Vehicle Condition] • Vehicle stopped • IDL: ON HINT: OFF: Line pressure up (when Active Test of "SOLENOID (SLT)" is performed, ECM commands SLT solenoid to turn off) ON: No action (normal operation)	-

*: "SOLENOID (SLT)" in the ACTIVE TEST is performed to check the line pressure changes by connecting SST to the automatic transmission, which is used in the HYDRAULIC TEST (See page AT-18) as well. Please note that the pressure values in the ACTIVE TEST and HYDRAULIC TEST are different.

NG → REPLACE SHIFT SOLENOID VALVE SLT

OK

3	INSPECT SHIFT SOLENOID VALVE S1

Shift Solenoid Valve S1:

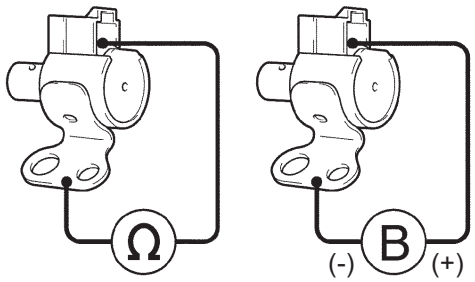

A110986E04

(a) Remove the shift solenoid valve S1.
(b) Measure the resistance.
Standard resistance

Tester Connection	Specified Condition
Solenoid Connector (S1) - Solenoid Body (S1)	11 to 15 Ω at 20°C (68°F)

(c) Connect the positive (+) lead to the terminal of the solenoid connector, and the negative (-) lead to the solenoid body.
OK:
The solenoid makes operating sounds.

NG → **REPLACE SHIFT SOLENOID VALVE S1**

OK

4	INSPECT TRANSMISSION VALVE BODY ASSEMBLY (See chapter 2 in the problem symptoms table)

OK:
There are no foreign objects on any valves and they operate smoothly.

NG → **REPAIR OR REPLACE TRANSMISSION VALVE BODY ASSEMBLY**

AT

OK

REPAIR OR REPLACE AUTOMATIC TRANSMISSION ASSEMBLY

DTC	P0756	Shift Solenoid "B" Performance (Shift Solenoid Valve S2)

DESCRIPTION

The ECM uses signals from the output shaft speed sensor and input speed sensor to detect the actual gear position (1st, 2nd, 3rd, 4th or 5th gear).
Then the ECM compares the actual gear with the shift schedule in the ECM memory to detect mechanical problems of the shift solenoid valves, valve body or automatic transmission (clutch, brake or gear, etc.).

DTC No.	DTC Detection Conditions	Trouble Areas
P0756	S2 stuck ON malfunction*1; The ECM determines that there is a malfunction when the following conditions are met (2-trip detection logic): (a) When the ECM directs the gearshift to switch to 1st gear, the actual gear is shifted to 2nd. (b) When the ECM directs the gearshift to switch to 5th gear, the engine overruns (clutch slips).	• Shift solenoid valve S2 remains open • Shift solenoid valve SLT remains open or closed • Valve body is blocked • Automatic transmission (clutch, brake or gear, etc.)
	S2 stuck OFF malfunction*2: The ECM determines that there is a malfunction when the following conditions are met (2-trip detection logic): (a) When the ECM directs the gearshift to switch to 1st gear, the actual gear is also shifted to 1st. (b) When the ECM directs the gearshift to switch to 2nd gear, the actual gear is shifted to 1st. (c) When the ECM directs the gearshift to switch to 5th gear, the actual gear is also shifted to 5th.	• Shift solenoid valve S2 remains closed • Shift solenoid valve SLT remains open or closed • Valve body is blocked • Automatic transmission (clutch, brake or gear, etc.)

HINT:
Gear positions in the event of a solenoid valve mechanical problem:

Gearshift controlled by ECM	1st	2nd	3rd	4th	5th
*1: Actual gear position under S2 stuck ON malfunction	2nd	2nd	3rd	3rd	N*
*2: Actual gear position under S2 stuck OFF malfunction	1st	1st	4th	4th	5th

N*: Neutral

AT

MONITOR DESCRIPTION

This DTC indicates "stuck ON malfunction" or "stuck OFF malfunction" of the shift solenoid valve S2. The ECM controls the gearshifts by turning the shift solenoid valves "ON/OFF". When the gear position directed by the ECM and the actual gear position do not match, the ECM illuminates the MIL and stores the DTC.

MONITOR STRATEGY

Related DTCs	P0756: Shift solenoid valve S2/OFF malfunction Shift solenoid valve S2/ON malfunction
Required sensors/Components (Main)	Shift solenoid valve S2
Required sensors/Components (Related)	Vehicle speed sensor, Throttle position sensor, Speed sensor (NT), Speed sensor (SP2)
Frequency of operation	Continuous

Duration	OFF malfunctions (A), (B) and (C): 0.4 seconds OFF malfunction (D): Immediate ON malfunctions (A) and (B): 0.4 seconds ON malfunction (C): 3 seconds ON malfunction (D): 0.5 seconds
MIL operation	2 driving cycles
Sequence of operation	None

TYPICAL ENABLING CONDITIONS

The following conditions are common to all OFF malfunctions (A), (B), (C) and (D) and ON malfunctions (A), (B), (C) and (D).

The monitor will run whenever the following DTCs are not present.	P0115 - P0118: ECT sensor P0125: Insufficient ECT for Closed Loop P0500: VSS P0748 - P799: Trans solenoid (range)
Turbine speed sensor (NT) circuit	No circuit malfunction
Output speed sensor (SP2) circuit	No circuit malfunction
Shift solenoid "A" (S1) circuit	No circuit malfunction
Shift solenoid "B" (S2) circuit	No circuit malfunction
Shift solenoid "E" (SR) circuit	No circuit malfunction
Pressure control solenoid "A" (SL1) circuit	No circuit malfunction
Pressure control solenoid "B" (SL2) circuit	No circuit malfunction
ECT (Engine Coolant Temperature) sensor circuit	No circuit malfunction
Knock sensor circuit	No circuit malfunction
ETCS (Electronic Throttle Control System)	System not down
Transmission shift position	"D"
ECT	40°C (104°F) or more
Spark advance from max. retard timing by knock sensor control	0° CA or more
Engine	Starting

OFF malfunction (A)

ECM selected gear	1st
Vehicle speed	1.2 to 24.9 mph (2 to 40 km/h)
Throttle valve opening angle	6.5 % or more at engine speed of 2,000 rpm (Conditions vary with engine speed)

OFF malfunction (B)

ECM selected gear	2nd
Vehicle speed	1.2 mph (2 km/h) or more
Output speed	2nd → 1st down shift point or more
Throttle valve opening angle	6.5 % or more at engine speed of 2,000 rpm (Conditions vary with engine speed)

OFF malfunction (C)

Current ECM selected gear	5th
Last ECM selected gear	4th
Continuous time of ECM selecting 4th gear	2 seconds or more
Actual gear when ECM selected 4th gear	4th

OFF malfunction (D)

Current ECM selected gear	5th

Last ECM selected gear	4th

ON malfunction (A)

ECM selected gear	1st
Vehicle speed	1.2 to 24.9 mph (2 to 40 km/h)
Throttle valve opening angle	6.5 % or more at engine speed of 2,000 rpm (Conditions vary with engine speed)

ON malfunction (B)

ECM selected gear	4th
Vehicle speed	1.2 mph (2 km/h) or more
Throttle valve opening angle	6.5 % or more at engine speed of 2,000 rpm (Conditions vary with engine speed)

ON malfunction (C)

Current ECM selected gear	5th
Last ECM selected gear	4th
Vehicle speed (During transition from 4th to 5th gear)	Less than 62.2 mph (100 km/h)

ON malfunction (D)

ECM selected gear	5th
Engine speed - Turbine speed (NE - NT) (After transition from 4th to 5th gear)	150 rpm or less
Vehicle speed (After transition from 4th to 5th gear)	Less than 62.2 mph (100 km/h)

TYPICAL MALFUNCTION THRESHOLDS

[OFF malfunction]

All of the following conditions are met: OFF malfunctions (A), (B), (C) and (D)

2 detections are necessary in 1 driving cycle.

1st detection; temporary flag ON

2nd detection; pending fault code ON

AT

OFF malfunction (A)

Turbine speed/Output speed	3.30 to 7.50 (Actual gear is 1st)

OFF malfunction (B)

Turbine speed/Output speed	3.30 to 7.50 (Actual gear is 1st)

OFF malfunction (C)

Turbine speed/Output speed	0.65 to 0.79 (Actual gear is 5th)

OFF malfunction (D)

Output record from ECM for 4th → 5th upshifting	Recorded

[ON malfunction]

ON malfunction (A) or (B) and ON malfunction (C) or (D) are met:

ON malfunction (A)

Turbine speed/Output speed	1.91 to 2.35 (Actual gear is 2nd)

ON malfunction (B)

Turbine speed/Output speed	1.28 to 1.53 (Actual gear is 3rd)

ON malfunction (C)

Turbine speed - Output speed x 4th gear ratio	1,000 rpm or more

ON malfunction (D)

Turbine speed - Output speed x 5th gear ratio	1,000 rpm or more

INSPECTION PROCEDURE

HINT:
Performing the ACTIVE TEST using the intelligent tester allows components, such as the relay, VSV, and actuator, to be operated without removing any parts. Performing the ACTIVE TEST as a first step of troubleshooting is one method of shortening labor time.
It is possible to display the DATA LIST during the ACTIVE TEST.

1. Warm up the engine.
2. Turn the ignition switch off.
3. Connect the intelligent tester together with the CAN VIM (Controller Area Network Vehicle Interface Module) to the DLC3.
4. Turn the ignition switch to the ON position.
5. Push the "ON" button of the tester.
6. Clear the DTC.
7. Select the items "DIAGNOSIS / ENHANCED OBD II / ACTIVE TEST / SHIFT".
8. According to the display on the tester, perform the "ACTIVE TEST".

HINT:
While driving, the shift position can be changed with the intelligent tester.
Comparing the shift position directed by the ACTIVE TEST with the actual shift position enables the problem to be confirmed (See page AT-34).

Item	Test Details	Diagnostic Note
SHIFT	[Test Details] Operate the shift solenoid valve and set each shift position manually. [Vehicle Condition] Vehicle Speed: Less than 30 mph (50 km/h) [Others] • Press → button: Shift up • Press ← button: Shift down	Possible to check the operation of the shift solenoid valves. HINT: Shifting to the 5th gear is possible only when the vehicle is stationary with the engine idling.

AT

HINT:

- This test can be conducted when the vehicle speed is 30 mph (50 km/h) or less.
- The 4th to 5th up-shifting must be performed with the accelerator pedal released.
- The 5th to 4th down-shifting must be performed with the accelerator pedal released.
- Do not operate the accelerator pedal for at least 2 seconds after shifting and do not shift successively.
- The shift position directed by the ECM is shown in the DATA LIST / SHIFT display on the intelligent tester.
- The shift solenoid valve S2 is turned on/off normally when the shift lever is in the D position:

Gearshift controlled by ECM	1st	2nd	3rd	4th	5th
Shift solenoid valve S2	OFF	ON	ON	OFF	OFF

1	CHECK ANY OTHER DTCS OUTPUT (IN ADDITION TO DTC P0756)

(a) Connect the intelligent tester to the DLC3.
(b) Turn the ignition switch to the ON position and push the intelligent tester main switch ON.
(c) Select the items "DIAGNOSIS / ENHANCED OBD II / DTC INFO / CURRENT CODES".

(d) Read the DTCs using the intelligent tester.

Result:

Display (DTC Output)	Proceed to
Only "P0756" is output	A
"P0756" and other DTCs	B

HINT:
If any codes besides "P0756" are output, perform troubleshooting for those DTCs first.

B → **GO TO DTC CHART**

A

2 **PERFORM ACTIVE TEST USING INTELLIGENT TESTER (SOLENOID (SLT)) (See page AT-84)**

NG → **REPLACE SHIFT SOLENOID VALVE SLT**

OK

3 **INSPECT SHIFT SOLENOID VALVE S2**

Shift Solenoid Valve S2:

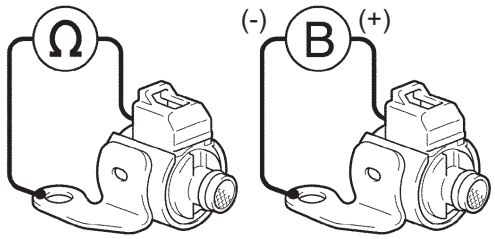

A110987E04

(a) Remove the shift solenoid valve S2.
(b) Measure the resistance.
Standard resistance

Tester Connection	Specified Condition
Solenoid Connector (S2) - Solenoid Body (S2)	11 to 15 Ωat 20°C (68°F)

(c) Connect the positive (+) lead to the terminal of the solenoid connector, and the negative (-) lead to the solenoid body.
OK:
The solenoid makes operating sounds.

NG → **REPLACE SHIFT SOLENOID VALVE S2**

OK

4 **INSPECT TRANSMISSION VALVE BODY ASSEMBLY (See chapter 2 in the problem symptoms table)**

OK:
There are no foreign objects on any valves and they operate smoothly.

NG → **REPAIR OR REPLACE TRANSMISSION VALVE BODY ASSEMBLY**

AT

OK

REPAIR OR REPLACE AUTOMATIC TRANSMISSION ASSEMBLY

DTC	P0771	Shift Solenoid "E" Performance (Shift Solenoid Valve SR)

DESCRIPTION

The ECM uses signals from the output shaft speed sensor and input speed sensor to detect the actual gear position (1st, 2nd, 3rd, 4th or 5th gear).
Then the ECM compares the actual gear with the shift schedule in the ECM memory to detect mechanical problems of the shift solenoid valves, valve body or automatic transmission (clutch, brake or gear, etc.).

DTC No.	DTC Detection Conditions	Trouble Areas
P0771	SR stuck ON malfunction*1: The ECM determines that there is a malfunction when the following condition is met (2-trip detection logic): (a) When the ECM directs the gearshift to switch to 2nd gear, the engine overruns (clutch slips).	• Shift solenoid valve SR remains open • Shift solenoid valve SL1 remains open • Shift solenoid valve SLT remains open or closed • Valve body is blocked • Automatic transmission (clutch, brake or gear, etc.)
	SR stuck OFF malfunction*2: The ECM determines that there is a malfunction when the following condition is met (2-trip detection logic): (a) When the ECM directs the gearshift to switch to 5th gear, the actual gear is shifted to 4th.	• Shift solenoid valve SR remains closed • Shift solenoid valve SL1 remains closed • Shift solenoid valve SLT remains open or closed • Valve body is blocked • Automatic transmission (clutch, brake or gear, etc.)

HINT:
Gear positions in the event of a solenoid valve mechanical problem:

Gearshift controlled by ECM	1st	2nd	3rd	4th	5th
*1: Actual gear position under SR stuck ON malfunction	1st	2nd	3rd	4th	5th
*2: Actual gear position under SR stuck OFF malfunction	1st	2nd	3rd	4th	4th

N*: Neutral

MONITOR DESCRIPTION

This DTC indicates "stuck ON malfunction" or "stuck OFF malfunction" of the shift solenoid valve SR or SL1. The ECM controls the gearshifts by turning the shift solenoid valves "ON/OFF". When the gear position directed by the ECM and the actual gear position do not match, the ECM illuminates the MIL and stores the DTC.

AT

MONITOR STRATEGY

Related DTCs	P0771: Shift solenoid valve SR/OFF malfunction Shift solenoid valve SR/ON malfunction
Required sensors/Components (Main)	Shift solenoid valve SR
Required sensors/Components (Related)	Speed sensor (NT), Speed sensor (SP2), Crankshaft position sensor (NE)
Frequency of operation	Continuous
Duration	OFF malfunction (A): 0.4 seconds OFF malfunctions (B) and (C): Immediate ON malfunction: 0.15 seconds
MIL operation	2 driving cycles
Sequence of operation	None

TYPICAL ENABLING CONDITIONS

The following conditions are common to all OFF malfunctions (A), (B) and (C) and ON malfunction.

The monitor will run whenever the following DTCs are not present.	P0115 - P0118: ECT sensor P0125: Insufficient ECT for Closed Loop P0500: VSS P0748 - P0799: Trans solenoid (range)
Turbine speed sensor (NT) circuit	No circuit malfunction
Output speed sensor (SP2) circuit	No circuit malfunction
Shift solenoid "A" (S1) circuit	No circuit malfunction
Shift solenoid "B" (S2) circuit	No circuit malfunction
Shift solenoid "E" (SR) circuit	No circuit malfunction
Pressure control solenoid "A" (SL1) circuit	No circuit malfunction
Pressure control solenoid "B" (SL2) circuit	No circuit malfunction
ECT (Engine Coolant Temperature) sensor circuit	No circuit malfunction
Knock sensor circuit	No circuit malfunction
ETCS (Electronic Throttle Control System)	System not down
Transmission shift position	"D"
ECT	40°C (104°F) or more
Spark advance from max. retard timing by knock sensor control	0° CA or more
Engine	Starting

OFF malfunction (A)

ECM selected gear	5th
Vehicle speed	1.2 mph (2 km/h) or more
Throttle valve opening angle	6.5 % or more at engine speed of 2,000 rpm (Conditions vary with engine speed)

OFF malfunction (B)

Current ECM selected gear	5th
Last ECM selected gear	4th
Continuous time of ECM selecting 4th gear	2 seconds or more

OFF malfunction (C)

Current ECM selected gear	5th
Last ECM selected gear	4th

ON malfunction

Current ECM selected gear	2nd
Last ECM selected gear	1st
Throttle valve opening angle (During transition from 1st to 2nd gear)	3.5 % or more at engine speed of 2,000 rpm (Conditions vary with engine speed)

TYPICAL MALFUNCTION THRESHOLDS

[OFF malfunction]
All of the following conditions are met: OFF malfunctions (A), (B) and (C)
2 detections are necessary in 1 driving cycle.
1st detection; temporary flag ON
2nd detection; pending fault code ON

OFF malfunction (A)

Turbine speed/Output speed	0.93 to 1.07 (Actual gear is 4th)

AT

OFF malfunction (B)

Turbine speed/Output speed	No change as follows: 0.93 to 1.07 (Actual gear is 4th) ↓ 0.65 to 0.79 (Actual gear is 5th)

OFF malfunction (C)

Output record from ECM for 4th → 5th upshifting	Recorded

[ON malfunction]
2 detections are necessary in 1 driving cycle.
1st detection; temporary flag ON
2nd detection; pending fault code ON

Turbine speed - Output speed x 1st gear ratio	150 rpm or more

INSPECTION PROCEDURE

HINT:
Performing the ACTIVE TEST using the intelligent tester allows components, such as the relay, VSV, and actuator, to be operated without removing any parts. Performing the ACTIVE TEST as a first step of troubleshooting is one method of shortening labor time.
It is possible to display the DATA LIST during the ACTIVE TEST.

1. Warm up the engine.
2. Turn the ignition switch off.
3. Connect the intelligent tester together with the CAN VIM (Controller Area Network Vehicle Interface Module) to the DLC3.
4. Turn the ignition switch to the ON position.
5. Push the "ON" button of the tester.
6. Clear the DTC.
7. Select the items "DIAGNOSIS / ENHANCED OBD II / ACTIVE TEST / SHIFT".
8. According to the display on the tester, perform the "ACTIVE TEST".

HINT:
While driving, the shift position can be changed with the intelligent tester.
Comparing the shift position directed by the ACTIVE TEST with the actual shift position enables the problem to be confirmed (See page AT-34).

Item	Test Details	Diagnostic Note
SHIFT	[Test Details] Operate the shift solenoid valve and set each shift position manually. [Vehicle Condition] Vehicle Speed: Less than 30 mph (50 km/h) [Others] • Press → button: Shift up • Press ← button: Shift down	Possible to check the operation of the shift solenoid valves. HINT: Shifting to the 5th gear is possible only when the vehicle is stationary with the engine idling.

HINT:

- This test can be conducted when the vehicle speed is 30 mph (50 km/h) or less.
- The 4th to 5th up-shifting must be performed with the accelerator pedal released.
- The 5th to 4th down-shifting must be performed with the accelerator pedal released.
- Do not operate the accelerator pedal for at least 2 seconds after shifting and do not shift successively.
- The shift position directed by the ECM is shown in the DATA LIST / SHIFT display on the intelligent tester.
- The shift solenoid valve SR and SL1 are turned on/off normally when the shift lever is in the D position:

Gearshift controlled by ECM	1st	2nd	3rd	4th	5th
Shift solenoid valve SR	OFF	OFF	OFF	OFF	ON
Shift solenoid valve SL1	OFF	OFF	OFF	OFF	ON

1	CHECK ANY OTHER DTCS OUTPUT (IN ADDITION TO DTC P0771)

(a) Connect the intelligent tester to the DLC3.
(b) Turn the ignition switch to the ON position and push the intelligent tester main switch ON.
(c) Select the items "DIAGNOSIS / ENHANCED OBD II / DTC INFO / CURRENT CODES".
(d) Read the DTCs using the intelligent tester.

Result:

Display (DTC Output)	Proceed to
Only "P0771" is output	A
"P0771" and other DTCs	B

HINT:
If any codes besides "P0771" are output, perform troubleshooting for those DTCs first

B → GO TO DTC CHART

A

2	PERFORM ACTIVE TEST USING INTELLIGENT TESTER (SOLENOID (SLT)) (See page AT-84)

NG → REPLACE SHIFT SOLENOID VALVE SLT

OK

3	INSPECT SHIFT SOLENOID VALVE SR

Shift Solenoid Valve SR:

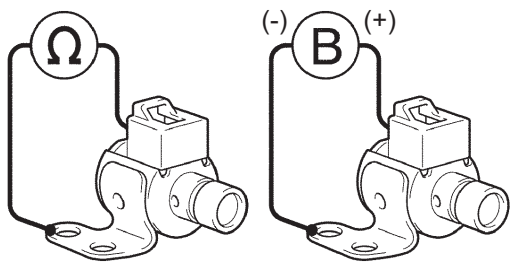

A110988E05

(a) Remove the shift solenoid valve SR.
(b) Measure the resistance.
Standard resistance

Tester Connection	Specified Condition
Solenoid Connector (SR) - Solenoid Body (SR)	11 to 15 Ω at 20°C (68°F)

(c) Connect the positive (+) lead to the terminal of the solenoid connector, and the negative (-) lead to the solenoid body.
OK:
The solenoid makes operating sounds

NG → REPLACE SHIFT SOLENOID VALVE SR

OK

AT

4	INSPECT SHIFT SOLENOID VALVE SL1

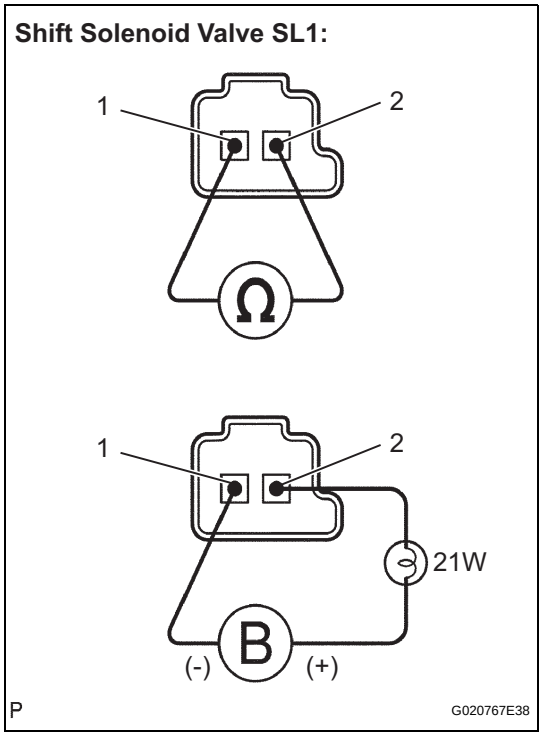

(a) Remove the shift solenoid valve SL1.
(b) Measure the resistance.
Standard resistance

Tester Connection	Specified Condition
1 - 2	5.0 to 5.6 Ω at 20°C (68°F)

(c) Connect the positive (+) lead with a 21 W bulb to terminal 2 and the negative (-) lead to terminal 1 of the solenoid valve connector, then check the movement of the valve.
OK:
The solenoid makes operating sounds.

NG → **REPLACE SHIFT SOLENOID VALVE SL1**

OK

5	INSPECT TRANSMISSION VALVE BODY ASSEMBLY (See chapter 2 in the problem symptoms table)

AT

OK:
There are no foreign objects on any valves and they operate smoothly.

NG → **REPAIR OR REPLACE TRANSMISSION VALVE BODY ASSEMBLY**

OK

REPAIR OR REPLACE AUTOMATIC TRANSMISSION ASSEMBLY

DTC	P0776	Pressure Control Solenoid "B" Performance (Shift Solenoid Valve SL2)

DESCRIPTION

The ECM uses signals from the output shaft speed sensor and input speed sensor to detect the actual gear position (1st, 2nd, 3rd, 4th or 5th gear).
Then the ECM compares the actual gear with the shift schedule in the ECM memory to detect mechanical problems of the shift solenoid valves, valve body or automatic transmission (clutch, brake or gear, etc.).

DTC No.	DTC Detection Conditions	Trouble Areas
P0776	SL2 stuck ON malfunction*1: The ECM determines that there is a malfunction when the following conditions are met (2-trip detection logic): (a) When the ECM directs the gearshift to switch to 4th gear, the actual gear is also shifted to 4th. (b) When the ECM directs the gearshift to switch to 5th gear, the engine overruns (clutch slips).	• Shift solenoid valve SL2 remains open • Shift solenoid valve SLT remains open or closed • Valve body is blocked • Automatic transmission (clutch, brake or gear, etc.)

HINT:
Gear positions in the event of a solenoid valve mechanical problem:

Gearshift controlled by ECM	1st	2nd	3rd	4th	5th
*1: Actual gear position under SL2 stuck ON malfunction	1st	2nd	3rd	4th	N*

N*: Neutral

MONITOR DESCRIPTION

This DTC indicates "stuck ON malfunction" of the shift solenoid valve SL2.
The ECM controls the gearshifts by turning the shift solenoid valves "ON/OFF". When the gear position directed by the ECM and the actual gear position do not match, the ECM illuminates the MIL and stores the DTC.

MONITOR STRATEGY

Related DTCs	P0776: Shift solenoid valve SL2/ON malfunction
Required sensors/Components (Main)	Shift solenoid valve SL2
Required sensors/Components (Related)	Speed sensor (NT), Speed sensor (SP2), Crankshaft position sensor (NE)
Frequency of operation	Continuous
Duration	ON malfunctions (A), (B) and (C): 0.4 seconds ON malfunction (D): 3 seconds ON malfunction (E): 0.5 seconds
MIL operation	2 driving cycles
Sequence of operation	None

TYPICAL ENABLING CONDITIONS

The following conditions are common to all ON malfunctions (A), (B), (C), (D) and (E).

The monitor will run whenever the following DTCs are not present.	P0115 - P0118: ECT sensor P0125: Insufficient ECT for Closed Loop P0500: VSS P0748 - P0799: Trans solenoid (range)
Turbine speed sensor (NT) circuit	No circuit malfunction
Output speed sensor (SP2) circuit	No circuit malfunction
Shift solenoid "A" (S1) circuit	No circuit malfunction

Shift solenoid "B" (S2) circuit	No circuit malfunction
Shift solenoid "E" (SR) circuit	No circuit malfunction
Pressure control solenoid "A" (SL1) circuit	No circuit malfunction
Pressure control solenoid "B" (SL2) circuit	No circuit malfunction
ECT (Engine Coolant Temperature) sensor circuit	No circuit malfunction
Knock sensor circuit	No circuit malfunction
ETCS (Electronic Throttle Control System)	System not down
Transmission shift position	"D"
ECT	40°C (104°F) or more
Spark advance from max. retard timing by knock sensor control	0° CA or more
Engine	Starting

ON malfunction (A)

ECM selected gear	1st
Vehicle speed	1.2 to 24.9 mph (2 to 40 km/h)
Throttle valve opening angle	6.5 % or more at engine speed of 2,000 rpm (Conditions vary with engine speed)

ON malfunction (B)

ECM selected gear	3rd
Vehicle speed	1.2 mph (2 km/h) or more
Throttle valve opening angle	6.5 % or more at engine speed of 2,000 rpm (Conditions vary with engine speed)

ON malfunction (C)

ECM selected gear	4th
Vehicle speed	1.2 mph (2 km/h) or more
Throttle valve opening angle	6.5 % or more at engine speed of 2,000 rpm (Conditions vary with engine speed)

ON malfunction (D)

Current ECM selected gear	5th
Last ECM selected gear	4th
Vehicle speed (During transition from 4th to 5th gear)	Less than 62.2 mph (100 km/h)

AT

ON malfunction (E)

ECM selected gear	5th
Engine speed - Turbine speed (NE - NT) (After transition from 4th to 5th gear)	150 rpm or less
Vehicle speed (After transition from 4th to 5th gear)	Less than 62.2 mph (100 km/h)

TYPICAL MALFUNCTION THRESHOLDS

[ON malfunction]

Both of the following conditions are met:

- ON malfunctions (A) and (B), or ON malfunction (C)
- ON malfunction (D) or (E)

ON malfunction (A)

Turbine speed/Output speed	3.30 to 7.50 (Actual gear is 1st)

ON malfunction (B)

Turbine speed/Output speed	1.28 to 1.53 (Actual gear is 3rd)

ON malfunction (C)

Turbine speed/Output speed	0.93 to 1.07 (Actual gear is 4th)

ON malfunction (D)

Turbine speed - Output speed x 4th gear ratio	1,000 rpm or more

ON malfunction (E)

Turbine speed - Output speed x 5th gear ratio	1,000 rpm or more

INSPECTION PROCEDURE

HINT:
Performing the ACTIVE TEST using the intelligent tester allows components, such as the relay, VSV, and actuator, to be operated without removing any parts. Performing the ACTIVE TEST as a first step of troubleshooting is one method of shortening labor time.
It is possible to display the DATA LIST during the ACTIVE TEST.

1. Warm up the engine.
2. Turn the ignition switch off.
3. Connect the intelligent tester together with the CAN VIM (Controller Area Network Vehicle Interface Module) to the DLC3.
4. Turn the ignition switch to the ON position.
5. Push the "ON" button of the tester.
6. Clear the DTC.
7. Select the items "DIAGNOSIS / ENHANCED OBD II / ACTIVE TEST / SHIFT".
8. According to the display on the tester, perform the "ACTIVE TEST".

HINT:
While driving, the shift position can be changed with the intelligent tester.
Comparing the shift position directed by the ACTIVE TEST with the actual shift position enables the problem to be confirmed (See page AT-34).

Item	Test Details	Diagnostic Note
SHIFT	[Test Details] Operate the shift solenoid valve and set each shift position manually. [Vehicle Condition] Vehicle Speed: Less than 30 mph (50 km/h) [Others] • Press → button: Shift up • Press ← button: Shift down	Possible to check the operation of the shift solenoid valves. HINT: Shifting to the 5th gear is possible only when the vehicle is stationary with the engine idling.

AT

HINT:

- This test can be conducted when the vehicle speed is 30 mph (50 km/h) or less.
- The 4th to 5th up-shifting must be performed with the accelerator pedal released.
- The 5th to 4th down-shifting must be performed with the accelerator pedal released.
- Do not operate the accelerator pedal for at least 2 seconds after shifting and do not shift successively.
- The shift position directed by the ECM is shown in the DATA LIST / SHIFT display on the intelligent tester.
- The shift solenoid valve SL2 is turned on/off normally when the shift lever is in the D position:

Gearshift controlled by ECM	1st	2nd	3rd	4th	5th
Shift solenoid valve SL2	ON	ON	ON	ON	OFF

1	**CHECK ANY OTHER DTCS OUTPUT (IN ADDITION TO DTC P0776)**

(a) Connect the intelligent tester to the DLC3.

(b) Turn the ignition switch to the ON position and push the intelligent tester main switch ON.
(c) Select the items "DIAGNOSIS / ENHANCED OBD II / DTC INFO / CURRENT CODES".
(d) Read the DTCs using the intelligent tester.

Result:

Display (DTC Output)	Proceed to
Only "P0776" is output	A
"P0776" and other DTCs	B

HINT:
If any codes besides "P0776" are output, perform troubleshooting for those DTCs first.

B → **GO TO DTC CHART**

A

2 **PERFORM ACTIVE TEST USING INTELLIGENT TESTER (SOLENOID (SLT)) (See page AT-84)**

NG → **REPLACE SHIFT SOLENOID VALVE SLT**

OK

3 **INSPECT SHIFT SOLENOID VALVE SL2**

Shift Solenoid Valve SL2:

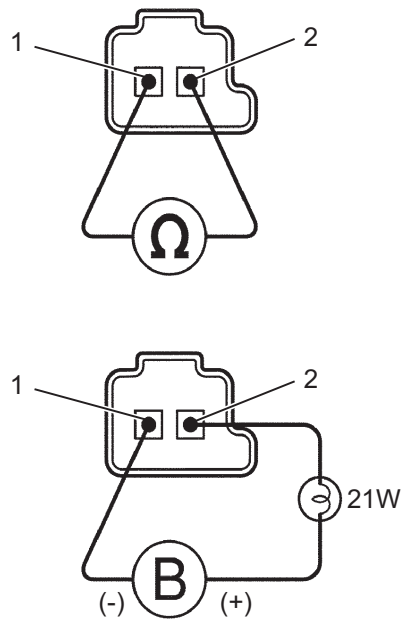

(a) Remove the shift solenoid valve SL2.
(b) Measure the resistance.
Standard resistance

Tester Connection	Specified Condition
1 - 2	5.0 to 5.6 Ωat 20°C (68°F)

(c) Connect the positive (+) lead with a 21 W bulb to terminal 2 and the negative (-) lead to terminal 1 of the solenoid valve connector, then check the movement of the valve.
OK:
The solenoid makes operating sounds.

NG → **REPLACE SHIFT SOLENOID VALVE SL2**

OK

AT

4	**INSPECT TRANSMISSION VALVE BODY ASSEMBLY (See chapter 2 in the problem symptoms table)**

OK:
There are no foreign objects on any valves and they operate smoothly.

NG → **REPAIR OR REPLACE TRANSMISSION VALVE BODY ASSEMBLY**

OK

REPAIR OR REPLACE AUTOMATIC TRANSMISSION ASSEMBLY

DTC	P0778	Pressure Control Solenoid "B" Electrical (Shift Solenoid Valve SL2)

DESCRIPTION

Shifting from 1st to 5th is performed in combination with the ON and OFF operation of the shift solenoid valves S1, S2, SR, SL1 and SL2 which are controlled by the ECM. If an open or short circuit occurs in any of the shift solenoid valves, the ECM controls the remaining normal shift solenoid valves to allow the vehicle to be driven smoothly (See page AT-34).

DTC No.	DTC Detection Conditions	Trouble Areas
P0778	The ECM checks for an open or short in the shift solenoid valve SL2 circuit (1-trip detection logic): • Output signal duty equals 100 %. (NOTE: SL2 output signal duty is less than 100 % under normal conditions)	• Open or short in shift solenoid valve SL2 circuit • Shift solenoid valve SL2 • ECM

MONITOR DESCRIPTION

This DTC indicates an open or short in the shift solenoid valve SL2 circuit. The ECM controls the gearshift by turning the shift solenoid valves "ON/OFF". When there is an open or short circuit in any shift solenoid valve circuit, the ECM detects the problem, illuminates the MIL and stores the DTC. And the ECM performs the fail-safe function and turns the other functioning shift solenoid valves "ON/OFF". (If an open or short circuit is detected, the ECM cuts the current to the circuit.)
If the ECM detects an open or short in the shift solenoid valve SL2 circuit, the ECM determines that there is a malfunction (See page AT-34).

MONITOR STRATEGY

Related DTCs	P0778: Shift solenoid valve SL2/Range check
Required sensors/Components	Shift solenoid valve SL2
Frequency of operation	Continuous
Duration	1 second
MIL operation	Immediate
Sequence of operation	None

AT

TYPICAL ENABLING CONDITIONS

The monitor will run whenever the following DTCs are not present.	None
Battery voltage	10 V or more
CPU requested duty ratio to SL2	Less than 75 %
Ignition switch	ON
Starter	OFF

TYPICAL MALFUNCTION THRESHOLDS

Output signal duty	100 %

COMPONENT OPERATING RANGE

Output signal duty	Less than 100 %

WIRING DIAGRAM

B37
Electronically Controlled Transmission Solenoid

(Shift Solenoid Valve SL2)

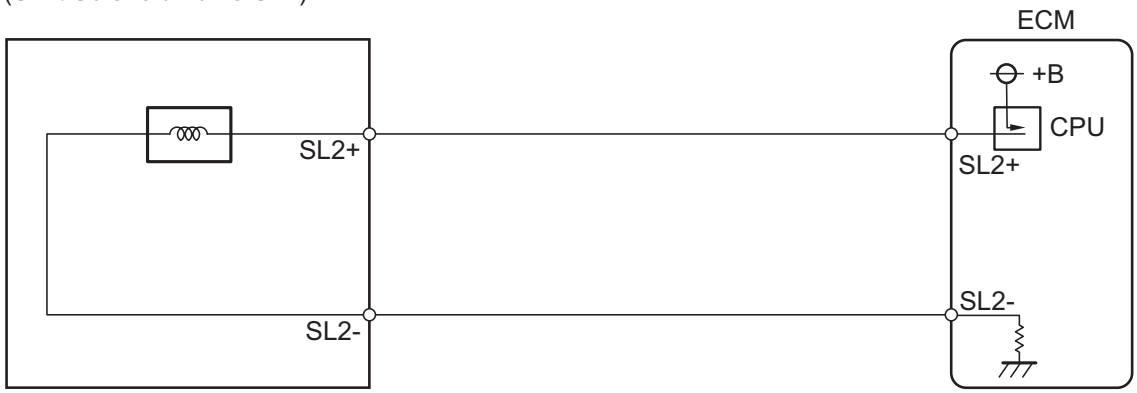

Y

C130126E02

INSPECTION PROCEDURE

HINT:
The shift solenoid valve SL2 is turned on/off normally when the shift lever is in the D position:

Gearshift controlled by ECM	1st	2nd	3rd	4th	5th
Shift solenoid valve SL2	ON	ON	ON	ON	OFF

1 INSPECT TRANSMISSION WIRE (SL2)

Transmission Wire Side:

(Connector Front View):

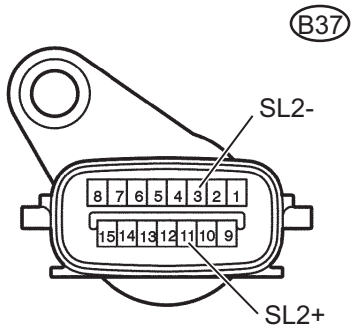

P

C110342E79

(a) Disconnect the transmission wire connector from the transmission.
(b) Measure the resistance.
Standard resistance

Tester Connection	Specified Condition
11 (SL2+) - 3 (SL2-)	5.0 to 5.6 Ωat 20°C (68°F)

(c) Measure the resistance.
Standard resistance (Check for short):

Tester Connection	Specified Condition
11 (SL2+) - Body ground	10 kΩ or higher
3 (SL2-) - Body ground	10 kΩ or higher

NG → **Go to step 3**

OK

2 CHECK HARNESS AND CONNECTOR (TRANSMISSION WIRE - ECM)

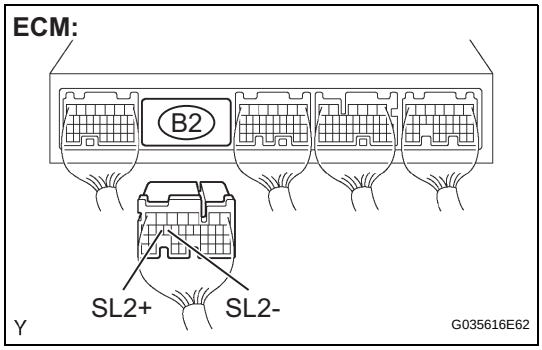

(a) Connect the transmission wire connector to the transmission.
(b) Disconnect the ECM connector.
(c) Measure the resistance.
Standard resistance

Tester Connection	Specified Condition
B2-17 (SL2+) - B2-16 (SL2-)	5.0 to 5.6 Ω at 20°C (68°F)

(d) Measure the resistance.
Standard resistance (Check for short)

Tester Connection	Specified Condition
B2-17 (SL2+) - Body ground	10 kΩ or higher
B2-16 (SL2-) - Body ground	10 kΩ or higher

NG → **REPAIR OR REPLACE HARNESS OR CONNECTOR**

OK

REPLACE ECM

3 INSPECT SHIFT SOLENOID VALVE SL2

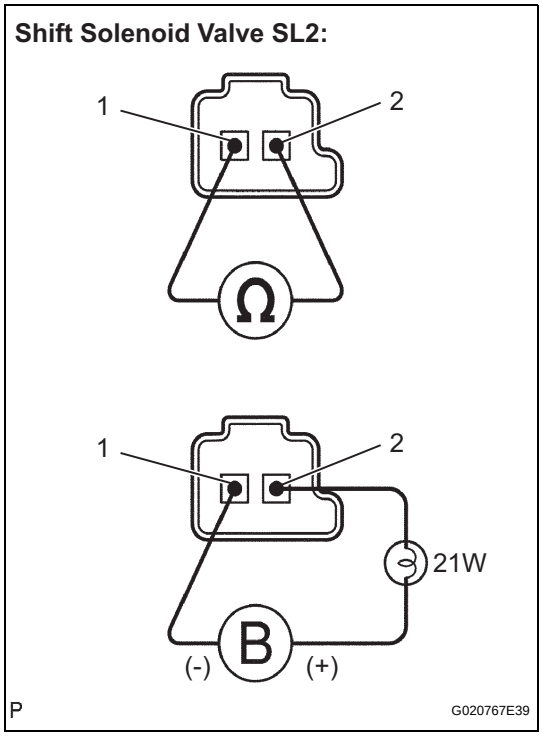

(a) Remove the shift solenoid valve SL2.
(b) Measure the resistance.
Standard resistance

Tester Connection	Specified Condition
1 - 2	5.0 to 5.6 Ω at 20°C (68°F)

(c) Connect the positive (+) lead with a 21 W bulb to terminal 2 and the negative (-) lead to terminal 1 of the solenoid valve connector, then check the movement of the valve.
OK:
The solenoid makes operating sounds.

NG → **REPLACE SHIFT SOLENOID VALVE SL2**

AT

OK

REPAIR OR REPLACE TRANSMISSION WIRE

DTC	P0781	1-2 Shift (1-2 Shift Valve)

DESCRIPTION

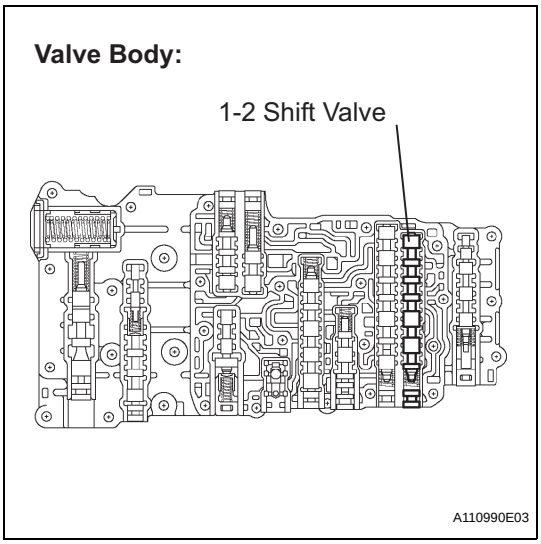

The 1-2 shift valve performs shifting to 1st gear and other gears.

DTC No.	DTC Detection Conditions	Trouble Areas
P0781	1-2 shift valve malfunction: The ECM determines that there is a malfunction when the following conditions (a) and (b), or (a) and (c) are met (2-trip detection logic): (a) When the ECM directs the gearshift to switch to 2nd gear, the actual gear is shifted to 1st. (b) When the ECM directs the gearshift to switch to 4th gear, the actual gear is shifted to 3rd. (c) When the ECM directs the gearshift to switch to 5th gear, the engine overruns (clutch slips)	• Valve body is blocked up or stuck (1-2 shift valve) • Shift solenoid valve SLT remains open or closed • Automatic transmission (clutch, brake or gear, etc.)

HINT:

AT

Gear positions in the event of a 1-2 shift valve mechanical problem:

Gearshift controlled by ECM	1st	2nd	3rd	4th	5th
Actual gear position under malfunction	1st	1st	3rd	3rd	N*

N*: Neutral

MONITOR DESCRIPTION

This DTC indicates that the 1-2 shift valve in the valve body is locked in the direction of the spring compression. The ECM controls the gearshifts by turning the shift solenoid valves "ON/OFF" and switching oil pressure to the valves in the valve body.
The ECM calculates the "actual" transmission gear by comparing the signals from the input speed sensor (NT) and the output speed sensor (SP2). The ECM can detect many mechanical problems in the shift solenoids, valve body, and the transmission clutches, brakes, and gears. If the ECM detects that the actual gear position and the commanded gear position are different, it will illuminate the MIL and store the DTC .

MONITOR STRATEGY

Related DTCs	P0781: Valve body/Rationality check
Required sensors/Components (Main)	Valve body
Required sensors/Components (Related)	Automatic transmission assembly, Speed sensor (NT), Speed sensor (SP2), Vehicle speed sensor, Throttle position sensor

Frequency of operation	Continuous
Duration	Conditions (A) and (B) 0.4 seconds Condition (C) 3 seconds Condition (D) 0.5 seconds
MIL operation	2 driving cycles
Sequence of operation	None

TYPICAL ENABLING CONDITIONS

The following conditions are common to all Conditions (A), (B), (C) and (D).

The monitor will run whenever the following DTCs are not present.	P0115 - P0118: ECT sensor P0125: Insufficient ECT for Closed Loop P0500: VSS P0748 - P0799: Trans Solenoid (range)
Turbine speed sensor (NT) circuit	No circuit malfunction
Output speed sensor (SP2) circuit	No circuit malfunction
Shift solenoid "A" (S1) circuit	No circuit malfunction
Shift solenoid "B" (S2) circuit	No circuit malfunction
Shift solenoid "E" (SR) circuit	No circuit malfunction
Pressure control solenoid "A" (SL1) circuit	No circuit malfunction
Pressure control solenoid "B" (SL2) circuit	No circuit malfunction
ECT (Engine Coolant Temperature) sensor circuit	No circuit malfunction
Knock sensor circuit	No circuit malfunction
ETCS (Electronic Throttle Control System)	System not down
Transmission shift position	"D"
ECT	40°C (104°F) or more
Spark advance from max. retard timing by knock sensor control	0°CA or more
Engine	Starting

Condition (A)

ECM selected gear	2nd
Vehicle speed	1.2 mph (2 km/h) or more
Output speed	2nd → 1st down shift point or more
Throttle valve opening angle	6.5 % or more at engine speed of 2,000 rpm (Conditions vary with engine speed)

Condition (B)

ECM selected gear	4th
Vehicle speed	1.2 mph (2 km/h) or more
Throttle valve opening angle	6.5 % or more at engine speed of 2,000 rpm (Conditions vary with engine speed)

Condition (C)

Current ECM selected gear	5th
Last ECM selected gear	4th
Vehicle speed (During transition from 4th to 5th gear)	Less than 62.2 mph (100 km/h)

Condition (D)

ECM selected gear	5th
Engine speed - Turbine speed (NE - NT) (After transition from 4th to 5th gear)	150 rpm or less

Vehicle speed (After transition from 4th to 5th gear)	Less than 62.2 mph (100 km/h)

TYPICAL MALFUNCTION THRESHOLDS

Condition (A) and Conditions (B), (C) or (D) are met:

Condition (A)

Turbine speed/Output speed	3.30 to 7.50 (Actual gear is 1st)

Condition (B)

Turbine speed/Output speed	1.28 to 1.53 (Actual gear is 3rd)

Condition (C)

Turbine speed - Output speed x 4th gear ratio	1,000 rpm or more

Condition (D)

Turbine speed - Output speed x 5th gear ratio	1,000 rpm or more

INSPECTION PROCEDURE

1	**CHECK ANY OTHER DTCS OUTPUT (IN ADDITION TO DTC P0781)**

(a) Connect the intelligent tester to the DLC3.
(b) Turn the ignition switch to the ON position and push the main switch ON.
(c) Select the items "DIAGNOSIS / ENHANCED OBD II / DTC INFO / CURRENT CODES".
(d) Read the DTCs using the intelligent tester.

Result:

Display (DTC Output)	Proceed to
Only "P0781" is output	A
"P0781" and other DTCs	B

HINT:
If any codes besides "P0781" are output, perform troubleshooting for those DTCs first.

B → **GO TO DTC CHART**

A

2	**PERFORM ACTIVE TEST USING INTELLIGENT TESTER (SHIFT)**

HINT:
Performing the ACTIVE TEST using the intelligent tester allows components, such as the relay, VSV, and actuator, to be operated without removing any parts. Performing the ACTIVE TEST as a first step of troubleshooting is one method of shortening labor time.
It is possible to display the DATA LIST during the ACTIVE TEST.
1. Warm up the engine.
2. Turn the ignition switch off.

3. Connect the intelligent tester together with the CAN VIM (Controller Area Network Vehicle Interface Module) to the DLC3.
4. Turn the ignition switch to the ON position.
5. Push the "ON" button of the tester.
6. Clear the DTC.
7. Select the items "DIAGNOSIS / ENHANCED OBD II / ACTIVE TEST / SHIFT".
8. According to the display on the tester, perform the "ACTIVE TEST".

HINT:
While driving, the shift position can be changed with the intelligent tester.
Comparing the shift position directed by the ACTIVE TEST with the actual shift position enables the problem to be confirmed (See page AT-34).

Item	Test Details	Diagnostic Note
SHIFT	[Test Details] Operate the shift solenoid valve and set each shift position manually. [Vehicle Condition] Vehicle Speed: Less than 30 mph (50 km/h) [Others] • Press →button: Shift up • Press ←button: Shift down	Possible to check the operation of the shift solenoid valves. HINT: Shifting to the 5th gear is possible only when the vehicle is stationary with the engine idling.

HINT:
- This test can be conducted when the vehicle speed is 30 mph (50 km/h) or less.
- The 4th to 5th up-shifting must be performed with the accelerator pedal released.
- The 5th to 4th down-shifting must be performed with the accelerator pedal released.
- Do not operate the accelerator pedal for at least 2 seconds after shifting and do not shift successively.
- The shift position directed by the ECM is shown in the DATA LIST/ SHIFT display on the intelligent tester.
- Gear positions in the event of a solenoid valve mechanical problem:

Gearshift operated by tester	1st	2nd	3rd	4th	5th
Actual gear position under malfunction	1st	1st	3rd	3rd	N*

N*: Neutral

OK:

Gear position changes in accordance with the tester operation.

NG → **REPAIR OR REPLACE TRANSMISSION VALVE BODY ASSEMBLY**

OK

AT

3	**PERFORM ACTIVE TEST USING INTELLIGENT TESTER (SOLENOID (SLT)) (See page AT-84)**

NG → **REPLACE SHIFT SOLENOID VALVE SLT**

OK

4	**CLEAR DTC AND PERFORM RUNNING TEST**

(a) Clear the DTC, and check for the DTC again after conducting the "MONITOR DRIVE PATTERN FOR ECT TEST" (See page AT-21).

OK:

No DTC

NG → **REPAIR OR REPLACE TRANSMISSION VALVE BODY ASSEMBLY**

OK

END

DTC	P0973	Shift Solenoid "A" Control Circuit Low (Shift Solenoid Valve S1)

DTC	P0974	Shift Solenoid "A" Control Circuit High (Shift Solenoid Valve S1)

DESCRIPTION

Shifting from 1st to 5th is performed in combination with the ON and OFF operations of the shift solenoid valves S1, S2, SR, SL1 and SL2 which are controlled by the ECM. If an open or short circuit occurs in any of the shift solenoid valves, the ECM controls the remaining normal shift solenoid valve to allow the vehicle to be driven smoothly (See page AT-34).

DTC No.	DTC Detection Conditions	Trouble Areas
P0973	ECM detects short in solenoid valve S1 circuit 2 times when solenoid valve S1 is operated. (1-trip detection logic)	• Short in shift solenoid valve S1 circuit • Shift solenoid valve S1 • ECM
P0974	ECM detects open in solenoid valve S1 circuit 2 times when solenoid valve S1 is not operated. (1-trip detection logic)	• Open in shift solenoid valve S1 circuit • Shift solenoid valve S1 • ECM

MONITOR DESCRIPTION

These DTCs indicate an open or short in the shift solenoid valve S1 circuit. When there is an open or short circuit in any shift solenoid valve circuits, the ECM detects the problem, illuminates the MIL and stores the DTC. When the shift solenoid valve S1 is ON, if the resistance is 8 Ω or less, the ECM determines that there is a short malfunction in the shift solenoid valve S1 circuit.
When the shift solenoid valve S1 is OFF, if the resistance is 100 kΩ or more, the ECM determines that the shift solenoid valve S1 circuit is open (See page AT-34).

MONITOR STRATEGY

Related DTCs	P0973: Shift solenoid valve S1/Range check (Low resistance) P0974: Shift solenoid valve S1/Range check (High resistance)
Required sensors/Components	Shift solenoid valve S1
Frequency of operation	Continuous
Duration	0.128 seconds or more
MIL operation	Immediate
Sequence of operation	None

AT

TYPICAL ENABLING CONDITIONS

P0973: Range check (Low resistance)

The monitor will run whenever the following DTCs are not present.	None
Shift solenoid valve S1	ON

P0974: Range check (High resistance)

The monitor will run whenever the following DTCs are not present.	None
Shift solenoid valve S1	OFF

TYPICAL MALFUNCTION THRESHOLDS

P0973: Range check (Low resistance)

Shift solenoid valve S1 resistance	8 Ω or less

P0974: Range check (High resistance)

Shift solenoid valve S1 resistance	100 kΩ or more

COMPONENT OPERATING RANGE

Shift solenoid valve S1 resistance	11 to 15 Ω at 20°C (68°F)

WIRING DIAGRAM

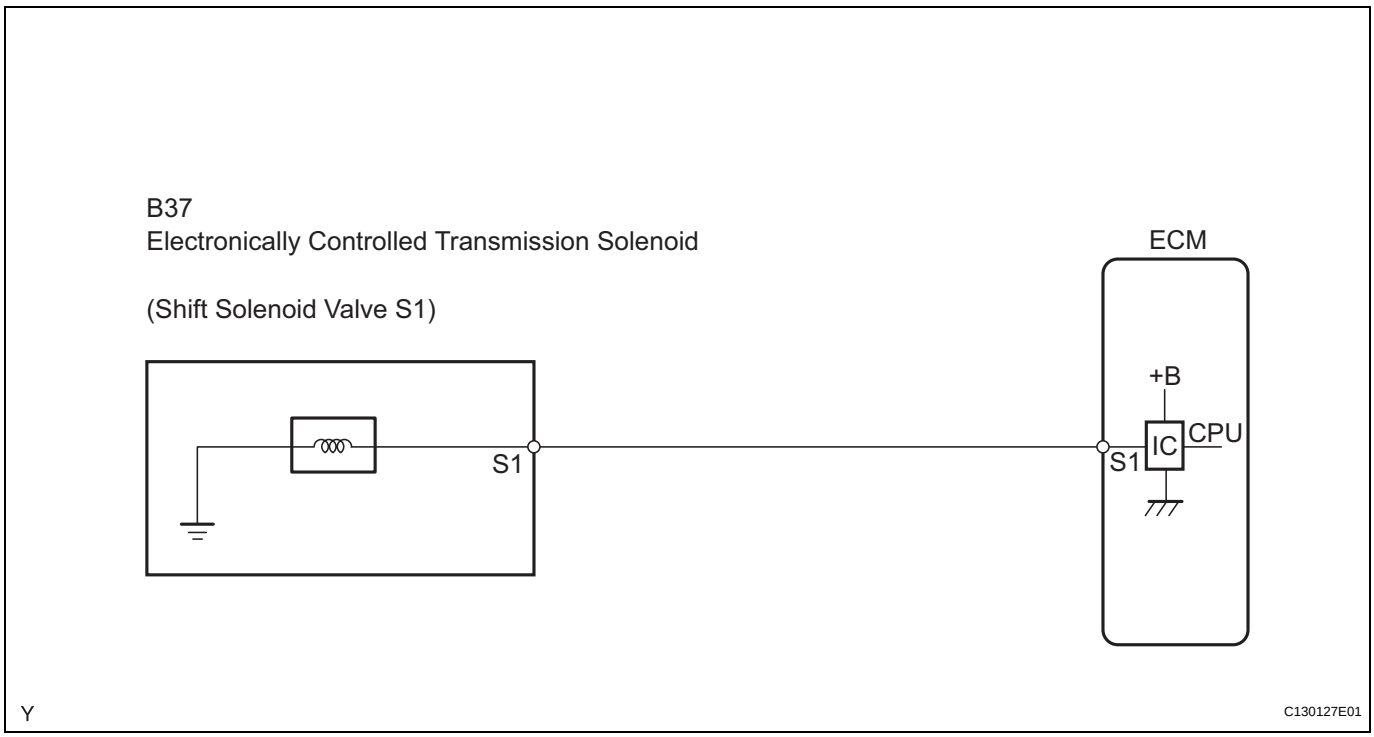

AT

INSPECTION PROCEDURE

HINT:

The shift solenoid valve S1 is turned on/off normally when the shift lever is in the D position:

Gearshift controlled by ECM	1st	2nd	3rd	4th	5th
Shift solenoid valve S1	ON	ON	OFF	OFF	OFF

1	INSPECT TRANSMISSION WIRE (S1)

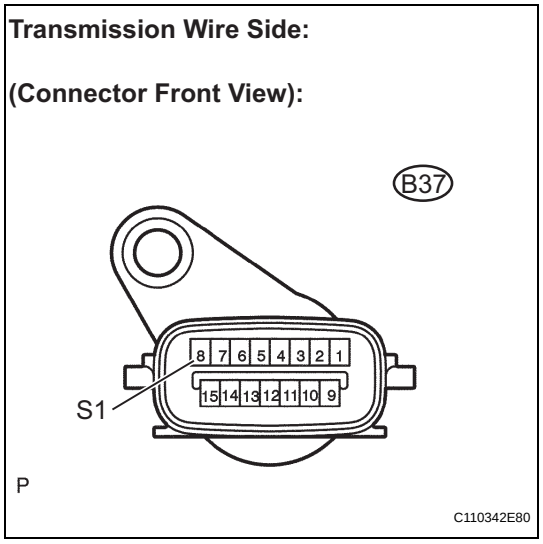

(a) Disconnect the transmission wire connector from the transmission.
(b) Measure the resistance.
Standard resistance

Tester Connection	Specified Condition
8 (S1) - Body ground	11 to 15 Ω at 20°C (68°F)

NG → **Go to step 3**

OK

2	CHECK HARNESS AND CONNECTOR (TRANSMISSION WIRE - ECM)

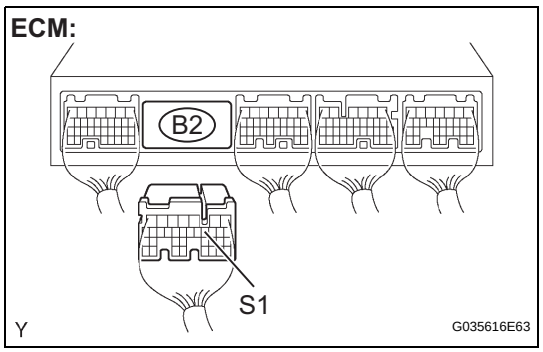

(a) Connect the transmission wire connector to the transmission.
(b) Disconnect the ECM connector.
(c) Measure the resistance.
Standard resistance

Tester Connection	Specified Condition
B2-11 (S1) - Body ground	11 to 15 Ω at 20°C (68°F)

NG → **REPAIR OR REPLACE HARNESS OR CONNECTOR**

OK

REPLACE ECM

AT

3	INSPECT SHIFT SOLENOID VALVE S1

Shift Solenoid Valve S1:

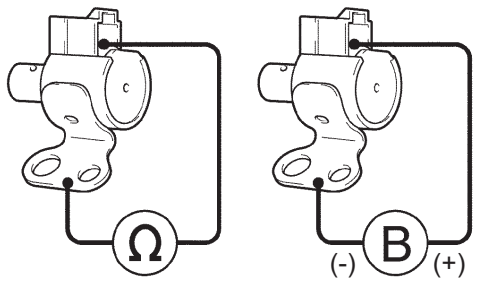

A110986E04

(a) Remove the shift solenoid valve S1.
(b) Measure the resistance.
Standard resistance

Tester Connection	Specified Condition
Solenoid Connector (S1) - Solenoid Body (S1)	11 to 15 Ω at 20°C (68°F)

(c) Connect the positive (+) lead to the terminal of the solenoid connector, and the negative (-) lead to the solenoid body.
OK:
The solenoid makes operating sounds.

NG → **REPLACE SHIFT SOLENOID VALVE S1**

OK

REPAIR OR REPLACE TRANSMISSION WIRE

DTC	P0976	Shift Solenoid "B" Control Circuit Low (Shift Solenoid Valve S2)

DTC	P0977	Shift Solenoid "B" Control Circuit High (Shift Solenoid Valve S2)

DESCRIPTION

Shifting from 1st to 5th is performed in combination with the ON and OFF operations of the shift solenoid valves S1, S2, SR, SL1 and SL2 which are controlled by the ECM. If an open or short circuit occurs in any of the shift solenoid valves, the ECM controls the remaining normal shift solenoid valve to allow the vehicle to be driven smoothly (See page AT-34).

DTC No.	DTC Detection Conditions	Trouble Areas
P0976	ECM detects short in solenoid valve S2 circuit 2 times when solenoid valve S2 is operated. (1-trip detection logic)	• Short in shift solenoid valve S2 circuit • Shift solenoid valve S2 • ECM
P0977	ECM detects open in solenoid valve S2 circuit 2 times when solenoid valve S2 is not operated. (1-trip detection logic)	• Open in shift solenoid valve S2 circuit • Shift solenoid valve S2 • ECM

MONITOR DESCRIPTION

These DTCs indicate an open or short in the shift solenoid valve S2 circuit. When there is an open or short circuit in any shift solenoid valve circuits, the ECM detects the problem, illuminates the MIL and stores the DTC. When the shift solenoid valve S2 is ON, if the resistance is 8 Ω or less, the ECM determines that there is a short malfunction in the shift solenoid valve S2 circuit.
When the shift solenoid valve S2 is OFF, if the resistance is 100 kΩ or more, the ECM determines that the shift solenoid valve S2 circuit is open (See page AT-34).

MONITOR STRATEGY

Related DTCs	P0976: Shift solenoid valve S2/Range check (Low resistance) P0977: Shift solenoid valve S2/Range check (High resistance)
Required sensors/Components	Shift solenoid valve S2
Frequency of operation	Continuous
Duration	0.128 seconds or more
MIL operation	Immediate
Sequence of operation	None

AT

TYPICAL ENABLING CONDITIONS

P0976: Range check (Low resistance)

The monitor will run whenever the following DTCs are not present.	None
Shift solenoid valve S2	ON

P0977: Range check (High resistance)

The monitor will run whenever the following DTCs are not present.	None
Shift solenoid valve S2	OFF

TYPICAL MALFUNCTION THRESHOLDS

P0976: Range check (Low resistance)

Shift solenoid valve S2 resistance	8 Ω or less

P0977: Range check (High resistance)

Shift solenoid valve S2 resistance	100 kΩ or more

COMPONENT OPERATING RANGE

Shift solenoid valve S2 resistance	11 to 15 Ω at 20°C (68°F)

WIRING DIAGRAM

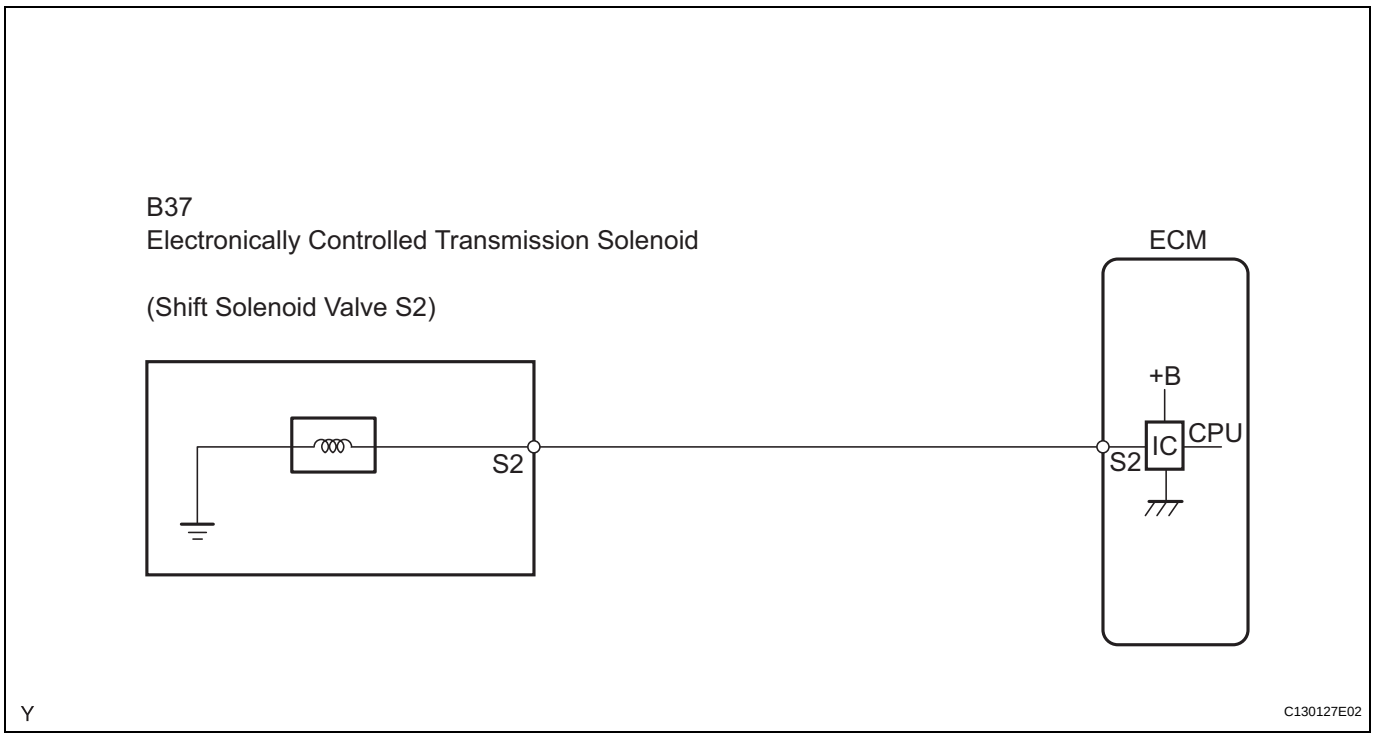

AT

INSPECTION PROCEDURE

HINT:

The shift solenoid valve S2 is turned on/off normally when the shift lever is in the D position:

Gearshift controlled by ECM	1st	2nd	3rd	4th	5th
Shift solenoid valve S2	OFF	ON	ON	OFF	OFF

1	INSPECT TRANSMISSION WIRE (S2)

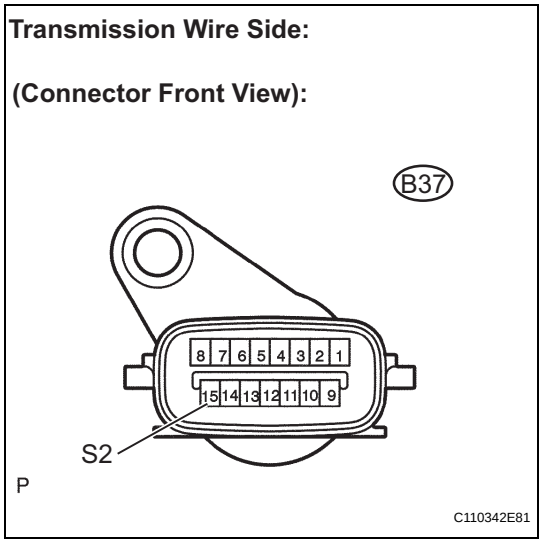

(a) Disconnect the transmission wire connector from the transmission.
(b) Measure the resistance.
Standard resistance

Tester Connection	Specified Condition
15 (S2) - Body ground	11 to 15 Ω at 20°C (68°F)

NG → **Go to step 3**

OK

2	CHECK HARNESS AND CONNECTOR (TRANSMISSION WIRE - ECM)

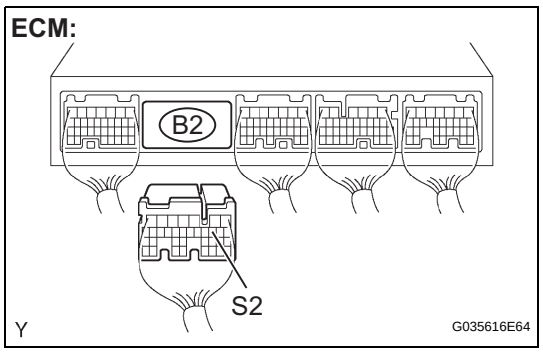

(a) Connect the transmission wire connector to the transmission.
(b) Disconnect the ECM connector.
(c) Measure the resistance.
Standard resistance

Tester Connection	Specified Condition
B2-10 (S2) - Body ground	11 to 15 Ω at 20°C (68°F)

NG → **REPAIR OR REPLACE HARNESS OR CONNECTOR**

OK

REPLACE ECM

AT

3	INSPECT SHIFT SOLENOID VALVE S2

Shift Solenoid Valve S2:

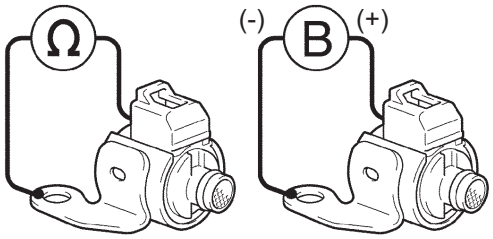

A110987E04

(a) Remove the shift solenoid valve S2.
(b) Measure the resistance.
Standard resistance

Tester Connection	Specified Condition
Solenoid Connector (S2) - Solenoid Body (S2)	11 to 15 Ω at 20°C (68°F)

(c) Connect the positive (+) lead to the terminal of the solenoid connector, and the negative (-) lead to the solenoid body.
OK:
The solenoid makes operating sounds.

NG → **REPLACE SHIFT SOLENOID VALVE S2**

OK

REPAIR OR REPLACE TRANSMISSION WIRE

DTC	P0985	Shift Solenoid "E" Control Circuit Low (Shift Solenoid Valve SR)

DTC	P0986	Shift Solenoid "E" Control Circuit High (Shift Solenoid Valve SR)

DESCRIPTION

Shifting from 1st to 5th is performed in combination with the ON and OFF operations of the shift solenoid valves S1, S2, SR, SL1 and SL2 which are controlled by the ECM. If an open or short circuit occurs in any of the shift solenoid valves, the ECM controls the remaining normal shift solenoid valves to allow the vehicle to be driven smoothly (See page AT-34).

DTC No.	DTC Detection Conditions	Trouble Areas
P0985	ECM detects short in solenoid valve SR circuit 2 times when solenoid valve SR is operated. (1-trip detection logic)	• Short in shift solenoid valve SR circuit • Shift solenoid valve SR • ECM
P0986	ECM detects open in solenoid valve SR circuit 2 times when solenoid valve SR is not operated. (1-trip detection logic)	• Open in shift solenoid valve SR circuit • Shift solenoid valve SR • ECM

MONITOR DESCRIPTION

These DTCs indicate an open or short in the shift solenoid valve SR circuit. When there is an open or short circuit in any shift solenoid valve circuits, the ECM detects the problem, illuminates the MIL and stores the DTC. When the shift solenoid valve SR is ON, if the resistance is 8 Ω or less, the ECM determines that there is a short malfunction in the shift solenoid valve SR circuit.
When the shift solenoid valve SR is OFF, if the resistance is 100 kΩ or more, the ECM determines that the shift solenoid valve SR circuit is open (See page AT-34).

MONITOR STRATEGY

Related DTCs	P0985: Shift solenoid valve SR/Range check (Low resistance) P0986: Shift solenoid valve SR/Range check (High resistance)
Required sensors/Components	Shift solenoid valve SR
Frequency of operation	Continuous
Duration	0.128 seconds
MIL operation	Immediate
Sequence of operation	None

AT

TYPICAL ENABLING CONDITIONS

P0985: Range check (Low resistance)

The monitor will run whenever the following DTCs are not present.	None
Shift solenoid valve SR	ON
Battery voltage	8 V or more
Ignition switch	ON
Starter	OFF

P0986: Range check (High resistance)

The monitor will run whenever the following DTCs are not present.	None
Shift solenoid valve SR	OFF
Battery voltage	8 V or more
Ignition switch	ON
Starter	OFF

TYPICAL MALFUNCTION THRESHOLDS

P0985: Range check (Low resistance)

Shift solenoid valve SR resistance	8 Ω or less

P0986: Range check (High resistance)

Shift solenoid valve SR resistance	100 kΩ or more

COMPONENT OPERATING RANGE

Shift solenoid valve SR resistance	11 to 15 Ω at 20°C (68°F)

WIRING DIAGRAM

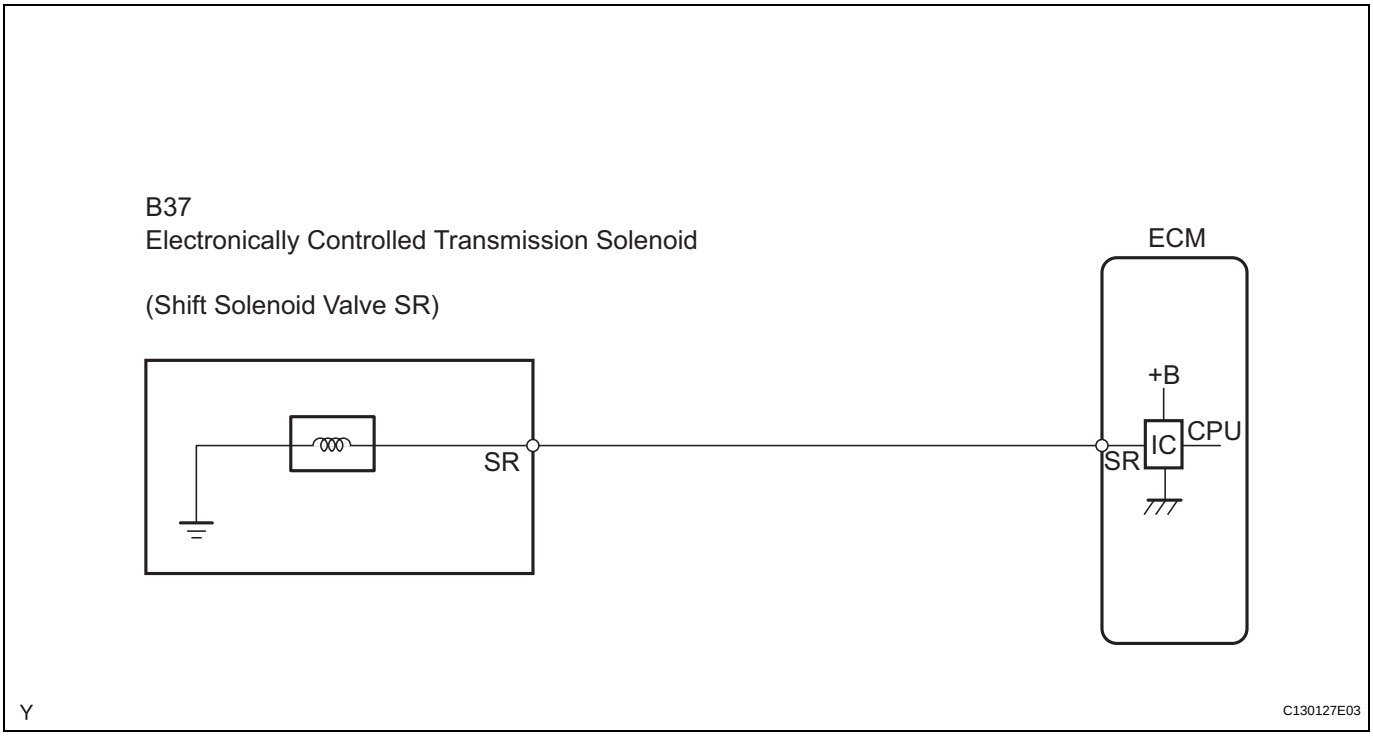

AT

INSPECTION PROCEDURE

HINT:

The shift solenoid valve SR is turned on/off normally when the shift lever is in the D position:

Gearshift controlled by ECM	1st	2nd	3rd	4th	5th
Shift solenoid valve SR	OFF	OFF	OFF	OFF	ON

1	INSPECT TRANSMISSION WIRE (SR)

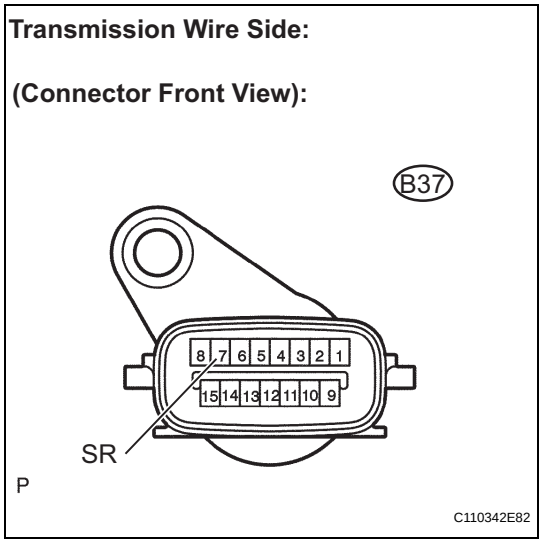

(a) Disconnect the transmission wire connector from the transmission.
(b) Measure the resistance.
Standard resistance

Tester Connection	Specified Condition
7 (SR) - Body ground	11 to 15 Ω at 20°C (68°F)

NG → **Go to step 3**

OK

2	CHECK HARNESS AND CONNECTOR (TRANSMISSION WIRE - ECM)

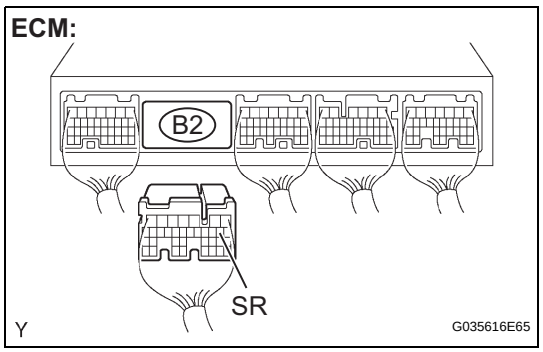

(a) Connect the transmission wire connector to the transmission.
(b) Disconnect the ECM connector.
(c) Measure the resistance.
Standard resistance

Tester Connection	Specified Condition
B2-9 (SR) - Body ground	11 to 15 Ω at 20°C (68°F)

NG → **REPAIR OR REPLACE HARNESS OR CONNECTOR**

OK

REPLACE ECM

AT

3	INSPECT SHIFT SOLENOID VALVE SR

Shift Solenoid Valve SR:

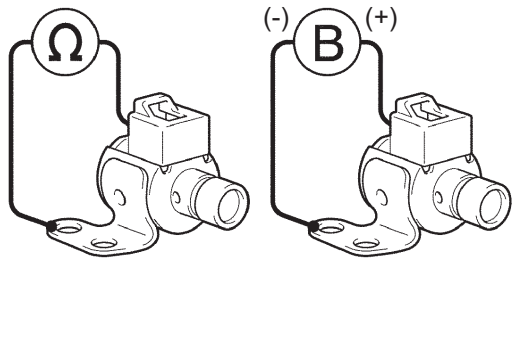

A110988E05

(a) Remove the shift solenoid valve SR.
(b) Measure the resistance.
Standard resistance

Tester Connection	Specified Condition
Solenoid Connector (SR) - Solenoid Body (SR)	11 to 15 Ω at 20°C (68°F)

(c) Connect the positive (+) lead to the terminal of the solenoid connector, and the negative (-) lead to the solenoid body.
OK:
The solenoid makes operating sounds.

NG → **REPLACE SHIFT SOLENOID VALVE SR**

OK

REPAIR OR REPLACE TRANSMISSION WIRE

DTC	P2714	Pressure Control Solenoid "D" Performance (Shift Solenoid Valve SLT)

DESCRIPTION

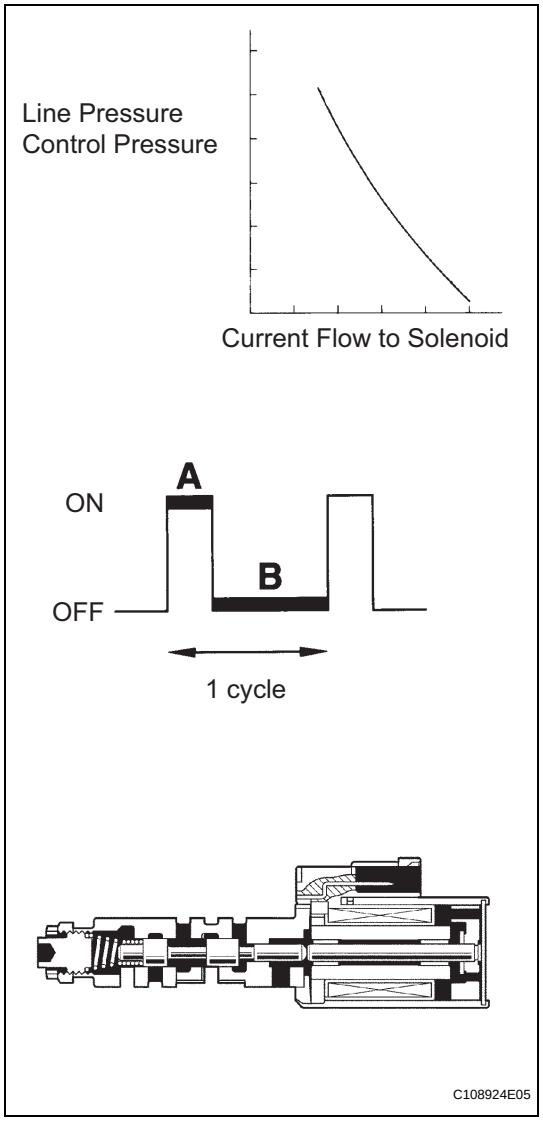

The linear solenoid valve (SLT) controls the transmission line pressure for smooth transmission operation based on signals from the throttle position sensor and the vehicle speed sensor. The ECM adjusts the duty ratio* of the SLT solenoid valve output signal to control the hydraulic line pressure coming from the primary regulator valve. Appropriate line pressure assures smooth shifting with varying engine outputs.
*: The duty ratio is the ratio of the continuity to non-continuity in one cycle.
For example, if A is the period of continuity in one cycle, and B is the period of non-continuity, then Duty Ratio=A/(A+B) x 100 (%)

DTC No.	DTC Detection Condition	Trouble Area
P2714	ECM detects malfunctions on SLT (ON side) according to the revolution difference between the turbine and the output shaft, and also by monitoring the oil pressure. (2 trip detection logic)	• Shift solenoid valve SLT remains open or closed • Shift solenoid valve S1, S2, SR, SL1 or SL2 remains open or closed • Valve body is blocked • Automatic transmission (clutch, brake or gear, etc.)

MONITOR DESCRIPTION

The ECM calculates the amount of heat absorbed by the friction material based on the difference in revolution (clutch slippage) between the turbine and output shaft. The ECM turns on the MIL and outputs this DTC when the amount of heat absorption exceeds the specified value.
When the shift solenoid valve SLT remains on, the oil pressure goes down and the clutch engagement force decreases.
NOTE: If driving continues under these conditions, the clutch will burn out and the vehicle will no longer be drivable.

MONITOR STRATEGY

Related DTCs	P2714 : Shift solenoid valve SLT/ON malfunction
Required sensors/Components (Main)	Shift solenoid valve SLT
Required sensors/Components (Related)	Valve body, ATF temperature sensor, Speed sensor (NT), Speed sensor (SP2)
Frequency of operation	Continuous
Duration	Immediate
MIL operation	2 driving cycles
Sequence of operation	None

TYPICAL ENABLING CONDITIONS

The monitor will run whenever the following DTCs are not present.	None
Turbine speed sensor (NT) circuit	No circuit malfunction
Output speed sensor (SP2) circuit	No circuit malfunction
Transmission fluid temperature sensor "A" circuit	No circuit malfunction
Shift solenoid "A" (S1) circuit	No circuit malfunction
Shift solenoid "B" (S2) circuit	No circuit malfunction
Shift solenoid "E" (SR) circuit	No circuit malfunction
Pressure control solenoid "A" (SL1) circuit	No circuit malfunction
Pressure control solenoid "B" (SL2) circuit	No circuit malfunction
Pressure control solenoid "D" (SLT) circuit	No circuit malfunction
ECT (Engine Coolant Temperature) sensor circuit	No circuit malfunction
Knock sensor circuit	No circuit malfunction
ETCS (Electronic Throttle Control System)	System not down
Transmission shift position	"D"
ECT	40°C (104°F) or more
Spark advance from max. retard timing by knock sensor control	0° CA or more
Engine	Starting
ATF temperature	10°C (50°F) or more

AT

TYPICAL MALFUNCTION THRESHOLDS

Summation of C1 clutch heat generations = SUM (Turbine speed - Output speed x Temporary gear ratio)	Specified value

INSPECTION PROCEDURE

HINT:
Performing the ACTIVE TEST using the intelligent tester allows components, such as the relay, VSV, and actuator, to be operated without removing any parts. Performing the ACTIVE TEST as a first step of troubleshooting is one method of shortening labor time.
It is possible to display the DATA LIST during the ACTIVE TEST.

1. Warm up the engine.
2. Turn the ignition switch off.
3. Connect the intelligent tester together with the CAN VIM (Controller Area Network Vehicle Interface Module) to the DLC3.
4. Turn the ignition switch to the ON position.
5. Push the "ON" button of the tester.
6. Clear the DTC.
7. Select the items "DIAGNOSIS / ENHANCED OBD II / ACTIVE TEST / SOLENOID (SLT)".
8. According to the display on the tester, perform the "ACTIVE TEST".

Item	Test Details	Diagnostic Note
SOLENOID (SLT) *	[Test Details] Operate the shift solenoid SLT to raise the line pressure. [Vehicle Condition] • Vehicle Stopped • IDL: ON [HINT] OFF: Line pressure up (When the active test of "SOLENOID (SLT)" is performed the ECM commands the SLT solenoid to turn off). ON: No action (normal operation)	-

*: "SOLENOID (SLT)" in the ACTIVE TEST is performed to check the line pressure changes by connecting SST to the automatic transmission, which is used in the HYDRAULIC TEST (See page AT-18) as well.

HINT:

- The pressure values in ACTIVE TEST and HYDRAULIC TEST are different from each other.
- Normally, the line pressure detected in the ACTIVE TEST is approximately half of the value detected in the HYDRAULIC TEST's stall test.

1 CHECK ANY OTHER DTCS OUTPUT (IN ADDITION TO DTC P2714)

(a) Connect the intelligent tester to the DLC3.
(b) Turn the ignition switch to the ON position and push the intelligent tester main switch ON.
(c) Select the items "DIAGNOSIS / ENHANCED OBD II / DTC INFO / CURRENT CODES".
(d) Read the DTCs using the intelligent tester.

AT

Result:

Display (DTC Output)	Proceed to
Only "P2714" is output	A
"P2714" and other DTCs	B

HINT:
If any codes besides "P2714" are output, perform troubleshooting for those DTCs first.

B → **GO TO DTC CHART**

A

2 PERFORM ACTIVE TEST USING INTELLIGENT TESTER (SOLENOID (SLT)) (See page AT-84)

NG → **Go to step 9**

OK

3	PERFORM ACTIVE TEST USING INTELLIGENT TESTER (SHIFT)

(a) Connect the intelligent tester to the DLC3.
(b) Turn the ignition switch ON.
(c) Turn the intelligent tester ON.
(d) Clear the DTC (See page AT-33).
(e) Enter the following menus: DIAGNOSIS / ENHANCED OBD II / ACTIVE TEST.
(f) Follow the instructions on the tester and perform the ACTIVE TEST.

HINT:
While driving, the shift position can be forcibly changed with the intelligent tester.

Item	Test Details	Diagnostic Note
SHIFT	[Test Details] Operate the shift solenoid valve and set each shift position. [Vehicle Condition] • IDL: ON • Less than 30 mph (50 km/h) [Other information] • Press "→" button: Shift up • Press "←" button: Shift down	Possible to check the operation of the shift solenoid valves. HINT: Shifting to the 5th gear is possible only when the vehicle is stationary with the engine idling.

HINT:
- This test can be conducted when the vehicle speed is 30 mph (50 km/h) or less.
- The 4th to 5th up-shift must be performed with the accelerator pedal released.
- The 5th to 4th down-shift must be performed with the accelerator pedal released.
- Do not operate the accelerator pedal for at least 2 seconds after shifting and do not shift successively.
- The shift position commanded by the ECM is shown in the DATA LIST (SHIFT) display on the intelligent tester.

(g) Compare the ECM gear shift command and the actual gear position.

ECM gear shift command			1st	2nd	3rd	4th	5th	Proceed to
Actual gear position under malfunction	Shift solenoid S1	Stuck ON	1st	2nd	2nd	1st	N*1	A
		Stuck OFF	4th	3rd	3rd	4th	5th	
	Shift solenoid S2	Stuck ON*2	2nd	2nd	3rd	3rd	N*1	B
		Stuck OFF*3	1st	1st	4th	4th	5th	
	Shift solenoid SL2	Stuck ON	1st	2nd	3rd	4th	N*1	C
		Stuck OFF	1st	2nd	3rd	4th	5th	
	Shift solenoid SR	Stuck ON*4	1st	2nd	3rd	4th	5th	D
		Stuck OFF*5	1st	2nd	3rd	4th	4th	

HINT:
- *1: Neutral
- *2: When shift solenoid S2 is stuck ON, the vehicle cannot drive in reverse.

AT

- *3: When shift solenoid S2 is stuck OFF, the 4th to 5th up-shift will have a large shift shock. Also the 5th to 4th down-shift will have time lag.
- *4: Stuck ON condition can be determined by checking if shift shock has increased excessively.
- *5: When shift solenoid SR is stuck OFF, moving the shift lever from N to D will cause a large shift shock.
- Gear shift can be determined by paying attention to changes in rpm.

B	Go to step 5
C	Go to step 6
D	Go to step 7
OK	Go to step 9

A

4	INSPECT SHIFT SOLENOID VALVE S1 (See page AT-114)

OK	Go to step 10

NG

REPLACE SHIFT SOLENOID VALVE S1

5	INSPECT SHIFT SOLENOID VALVE S2 (See page AT-118)

OK	Go to step 10

NG

REPLACE SHIFT SOLENOID VALVE S2

6	INSPECT SHIFT SOLENOID VALVE SL2 (See page AT-104)

OK	Go to step 10

NG

REPLACE SHIFT SOLENOID VALVE SL2

7	INSPECT SHIFT SOLENOID VALVE SR (See page AT-122)

NG → REPLACE SHIFT SOLENOID VALVE SR

OK

8	INSPECT SHIFT SOLENOID VALVE SL1 (See page AT-79)

OK → Go to step 10

NG

REPLACE SHIFT SOLENOID VALVE SL1

9	INSPECT SHIFT SOLENOID VALVE SLT

Shift Solenoid Valve SLT:

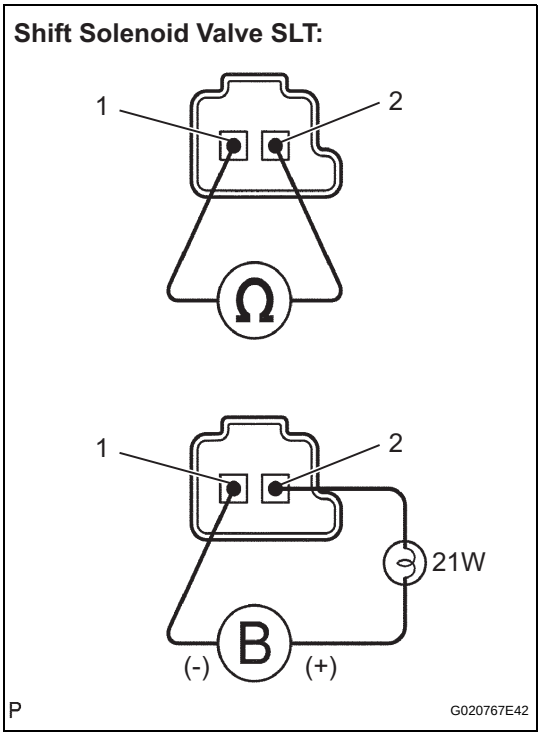

(a) Remove the shift solenoid valve SLT.
(b) Measure the resistance.
Standard resistance

Tester Connection	Specified Condition
1 - 2	5.0 to 5.6 Ω at 20°C (68°F)

(c) Connect the positive (+) lead with a 21 W bulb to terminal 2 and the negative (-) lead to terminal 1 of the solenoid valve connector, then check the movement of the valve.
OK:
The solenoid makes operating sounds.

NG → REPLACE SHIFT SOLENOID VALVE SLT

OK

10	INSPECT TRANSMISSION VALVE BODY ASSEMBLY (See chapter 2 in the problem symptoms table)

OK:
There are no foreign objects on any valves and they operate smoothly.

NG → REPAIR OR REPLACE TRANSMISSION VALVE BODY ASSEMBLY

AT

OK

11	INSPECT TORQUE CONVERTER CLUTCH ASSEMBLY

(a) Check the torque converter clutch assembly (See page AT-179).

OK:

The torque converter clutch operates normally.

NG → **REPLACE TORQUE CONVERTER CLUTCH ASSEMBLY**

OK

REPAIR OR REPLACE AUTOMATIC TRANSMISSION ASSEMBLY

DTC	P2716	Pressure Control Solenoid "D" Electrical (Shift Solenoid Valve SLT)

DESCRIPTION

Refer to DTC P2714 (See page AT-115).

DTC No.	DTC Detection Conditions	Trouble Areas
P2716	Open or short is detected in shift solenoid valve SLT circuit for 1 second or more while driving (1-trip detection logic)	• Open or short in shift solenoid valve SLT circuit • Shift solenoid valve SLT • ECM

MONITOR DESCRIPTION

When an open or short is detected in the linear solenoid valve (SLT) circuit, the ECM interprets this as a fault.
The ECM turns on the MIL and stores the DTC.

MONITOR STRATEGY

Related DTCs	P2716: Shift solenoid valve SLT/Range check
Required sensors/Components	Shift solenoid valve SLT
Frequency of operation	Continuous
Duration	Condition (A) and (B): 1 second
MIL operation	Immediate
Sequence of operation	None

TYPICAL ENABLING CONDITIONS

The following conditions are common to Condition (A) and (B).

The monitor will run whenever the following DTCs are not present.	None
Ignition switch	ON
Starter	OFF

AT

Condition (A)

Solenoid current cut status	Not cut
Battery voltage	11 V or more

Condition (B)

Battery voltage	8 V or more

TYPICAL MALFUNCTION THRESHOLDS

Either of the following conditions is met: Condition (A) or (B)

Condition (A)

Solenoid status (SLT) from Hybrid IC	Fail

Condition (B)

Hybrid IC status	Fail

COMPONENT OPERATING RANGE

Shift solenoid valve SLT	Resistance: 5.0 to 5.6 Ω at 20°C (68°F)

WIRING DIAGRAM

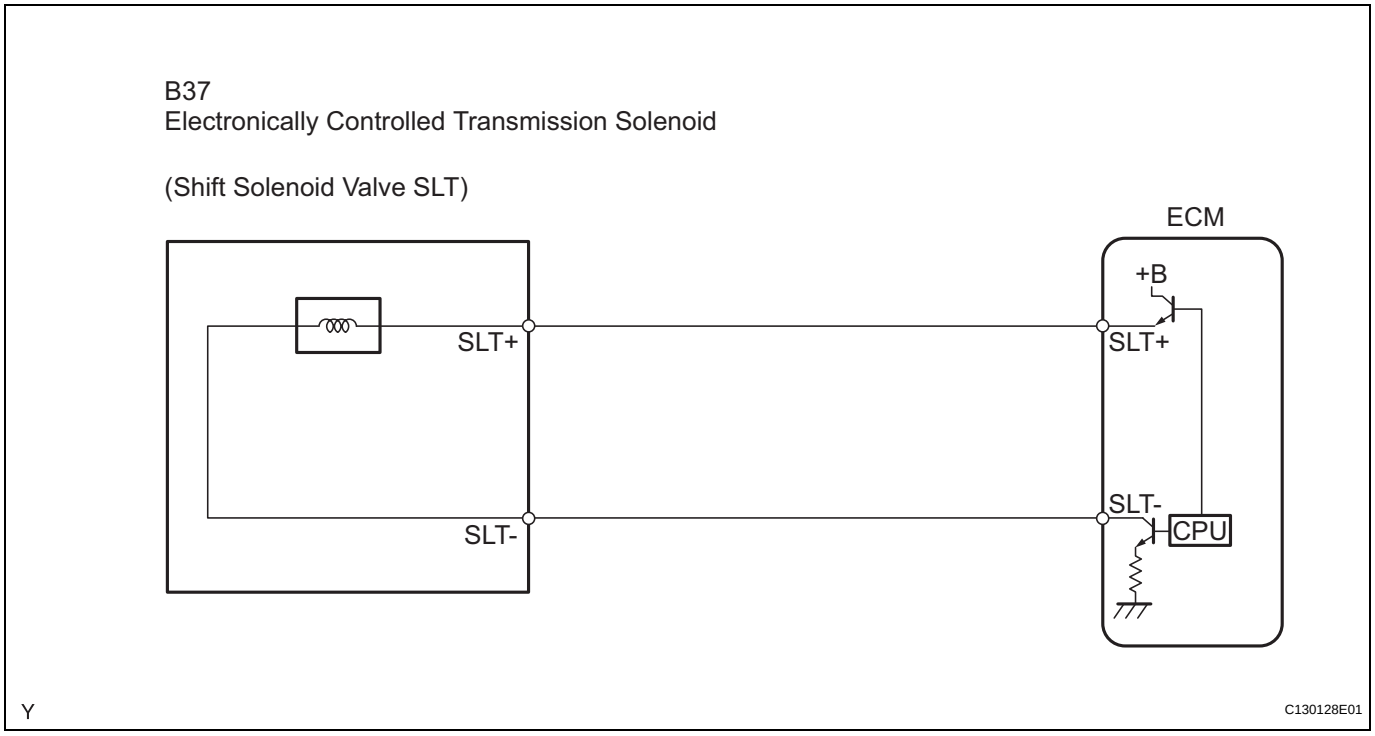

INSPECTION PROCEDURE

1	INSPECT TRANSMISSION WIRE (SLT)

Transmission Wire Side:

(Connector Front View):

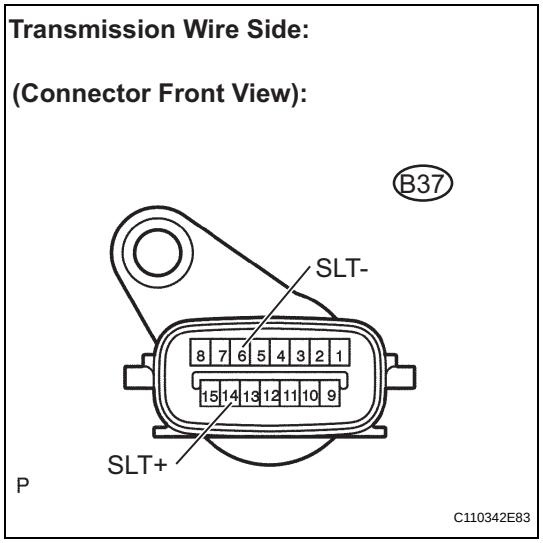

(a) Disconnect the transmission wire connector from the transmission.

(b) Measure the resistance.

Standard resistance

Tester Connection	Specified Condition
14 (SLT+) - 6 (SLT-)	5.0 to 5.6 Ω at 20°C (68°F)

(c) Measure the resistance.

Standard resistance (Check for short)

Tester Connection	Specified Condition
14 (SLT+) - Body ground	10 kΩ or higher
6 (SLT-) - Body ground	10 kΩ or higher

NG → **Go to step 3**

OK

AT

2 CHECK HARNESS AND CONNECTOR (TRANSMISSION WIRE - ECM)

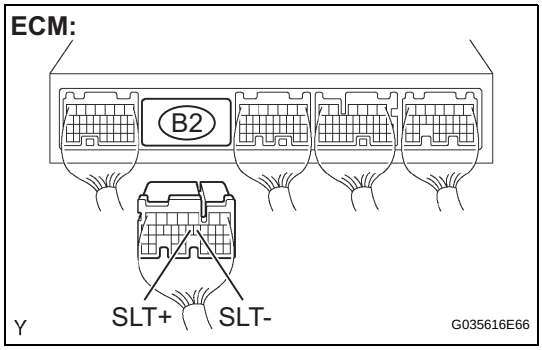

(a) Connect the transmission wire connector to the transmission.
(b) Disconnect the ECM connector.
(c) Measure the resistance.
Standard resistance

Tester Connection	Specified Condition
B2-13 (SLT+) - B2-12 (SLT-)	5.0 to 5.6 Ω at 20°C (68°F)

(d) Measure the resistance.
Standard resistance (Check for short)

Tester Connection	Specified Condition
B2-13 (SLT+) - Body ground	10 kΩ or higher
B2-12 (SLT-) - Body ground	10 kΩ or higher

NG → **REPAIR OR REPLACE HARNESS OR CONNECTOR**

OK

REPLACE ECM

3 INSPECT SHIFT SOLENOID VALVE SLT

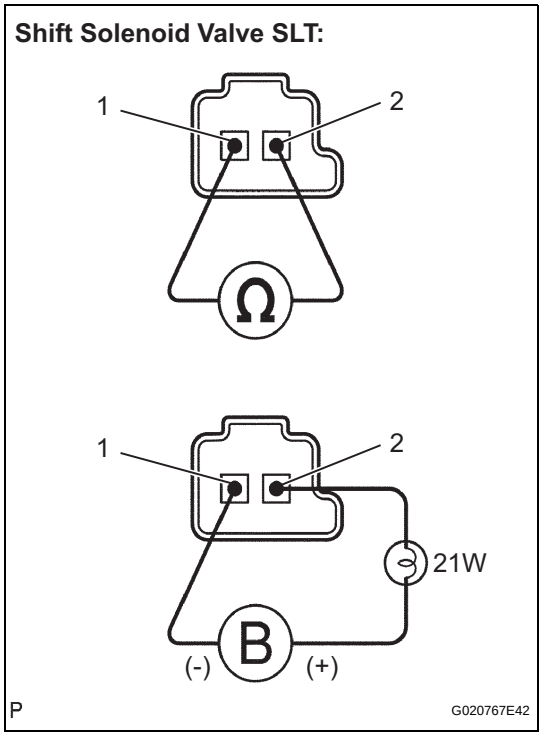

(a) Remove the shift solenoid valve SLT.
(b) Measure the resistance.
Standard resistance

Tester Connection	Specified Condition
1 - 2	5.0 to 5.6 Ω at 20°C (68°F)

(c) Connect the positive (+) lead with a 21 W bulb to terminal 2 and the negative (-) lead to terminal 1 of the solenoid valve connector, then check the movement of the valve.
OK:
The solenoid makes operating sounds.

NG → **REPLACE SHIFT SOLENOID VALVE SLT**

AT

OK

REPAIR OR REPLACE TRANSMISSION WIRE

DTC	P2740	Transmission Fluid Temperature Sensor "B" Circuit

DTC	P2742	Transmission Fluid Temperature Sensor "B" Circuit Low Input

DTC	P2743	Transmission Fluid Temperature Sensor "B" Circuit High Input

DESCRIPTION

The No. 2 Automatic Transmission Fluid (ATF) temperature sensor is on the transmission, just before the oil cooler inlet pipeline.

If the ECM detects an abnormally high ATF temperature through this sensor, it illuminates the warning light to indicate the problem to the driver.

HINT:

- The ATF temperature is liable to increase under vehicle conditions such as towing, climbing hills and in traffic.
- If there is a short malfunction in the No. 2 ATF temperature sensor, the ECM receives signals from the sensor, which indicate that the ATF temperature is 150°C (302°F) or more.

The symptoms and recovery conditions, when the sensor is normal or there is a short malfunction in the sensor, are as shown in the table below.

No.2 ATF Temperature Sensor Status	Detection Condition	Symptom	Recovery Condition
Sensor is normal	• ATF temperature more than 150°C (302°F)	• ATF temperature warning light remains on	• ATF temperature less than 135°C (275°F) *2
	• ATF temperature more than 130°C (266°F)	• Shift point too high	• ATF temperature less than 110°C (230°F)
	When the conditions (a) and (b) are satisfied continually (a) ATF temperature more than130°C (266°F) (b) Engine coolant temperature more than 95°C (203°F)	• Lock-up in 3rd gear *1	• ATF temperature less than 110°C (230°F) *2 and engine coolant temperature less than 95°C (203°F)
Sensor is short	• Any conditions	• ATF temperature warning light remains on • Shift point too high	• Symptoms still occur
	• Engine coolant temperature more than 95°C (203°F)	• Lock-up in 3rd gear *1	• Symptom still occurs

HINT:

*1: When the ATF temperature is normal, the transmission locks up in 5th gear with the shift lever in the D position and in 4th gear with the shift lever in the 4th position.

*2: When the ATF temperature is in the normal range, it decreases to less than 135°C (275°F) within 5 minutes of the shift lever being moved to the P or N position, while idling.

DTC No.	DTC Detection Conditions	Trouble Areas
P2740	Conditions (a) and (b) are detected momentarily within 0.5 seconds when neither P2742 nor P2743 is detected. (1-trip detection logic) (a) No. 2 ATF temperature sensor resistance (voltage) is less than 25 Ω (0.046 V). (b) No. 2 ATF temperature sensor resistance (voltage) is more than 156 kΩ (4.915 V). HINT: Within 0.5 seconds the malfunction changes from (a) to (b) or (b) to (a).	• Open or short in No.2 ATF temperature sensor circuit • No.2 ATF temperature sensor • ECM

DTC No.	DTC Detection Conditions	Trouble Areas
P2742	No. 2 ATF temperature sensor resistance (voltage) is less than 25 Ω (0.046 V) for 0.5 seconds or more (1-trip detection logic)	• Short in No.2 ATF temperature sensor circuit • No.2 ATF temperature sensor • ECM
P2743	No. 2 ATF temperature sensor resistance (voltage) is more than 156 kΩ (4.915 V) for 0.5 seconds or more 15 minutes or more after starting engine (1-tip detection logic)	• Open in No.2 ATF temperature sensor circuit • No.2 ATF temperature sensor • ECM

MONITOR DESCRIPTION

These DTCs indicate an open or short in the No. 2 Automatic Transmission Fluid (ATF) temperature sensor circuit. The No. 2 ATF temperature sensor converts the ATF temperature to an electrical resistance value. Based on the resistance, the ECM determines the ATF temperature, and detects any open or short malfunctions in the No. 2 ATF temperature sensor circuit. If the resistance (voltage) of the No. 2 ATF temperature sensor is less than 25 Ω (0.046 V) or more than 156 kΩ (4.915 V), the ECM interprets this as a fault in the No. 2 ATF temperature sensor or its wiring. The ECM turns on the MIL and stores a DTC.

MONITOR STRATEGY

Related DTCs	P2740 : No. 2 ATF temperature sensor/Range check (Fluttering) P2742 : No. 2 ATF temperature sensor/Range check (Low voltage) P2743 : No. 2 ATF temperature sensor/Range check (High voltage)
Required sensors/Components	No. 2 ATF temperature sensor
Frequency of operation	Continuous
Duration	0.5 seconds
MIL operation	Immediate
Sequence of operation	None

TYPICAL ENABLING CONDITIONS

P2740: Range check (Fluttering)

The monitor will run whenever the following DTCs are not present.	None
The typical enabling condition is not available.	-

P2742: Range check (Low voltage)

The monitor will run whenever the following DTCs are not present.	None
The typical enabling condition is not available.	-

P2743: Range check (High voltage)

The monitor will run whenever the following DTCs are not present.	None
Time after engine start	15 minutes or more

TYPICAL MALFUNCTION THRESHOLDS

P2740: Range check (Fluttering)

No. 2 ATF temperature sensor voltage	Less than 0.046 V or More than 4.915 V

P2742: Range check (Low voltage)

No. 2 ATF temperature sensor voltage	Less than 0.046 V

P2743: Range check (High voltage)

No. 2 ATF temperature sensor voltage	More than 4.915 V

COMPONENT OPERATING RANGE

ATF temperature sensor	Atmospheric temperature up to approximately 130°C (266°F)

WIRING DIAGRAM

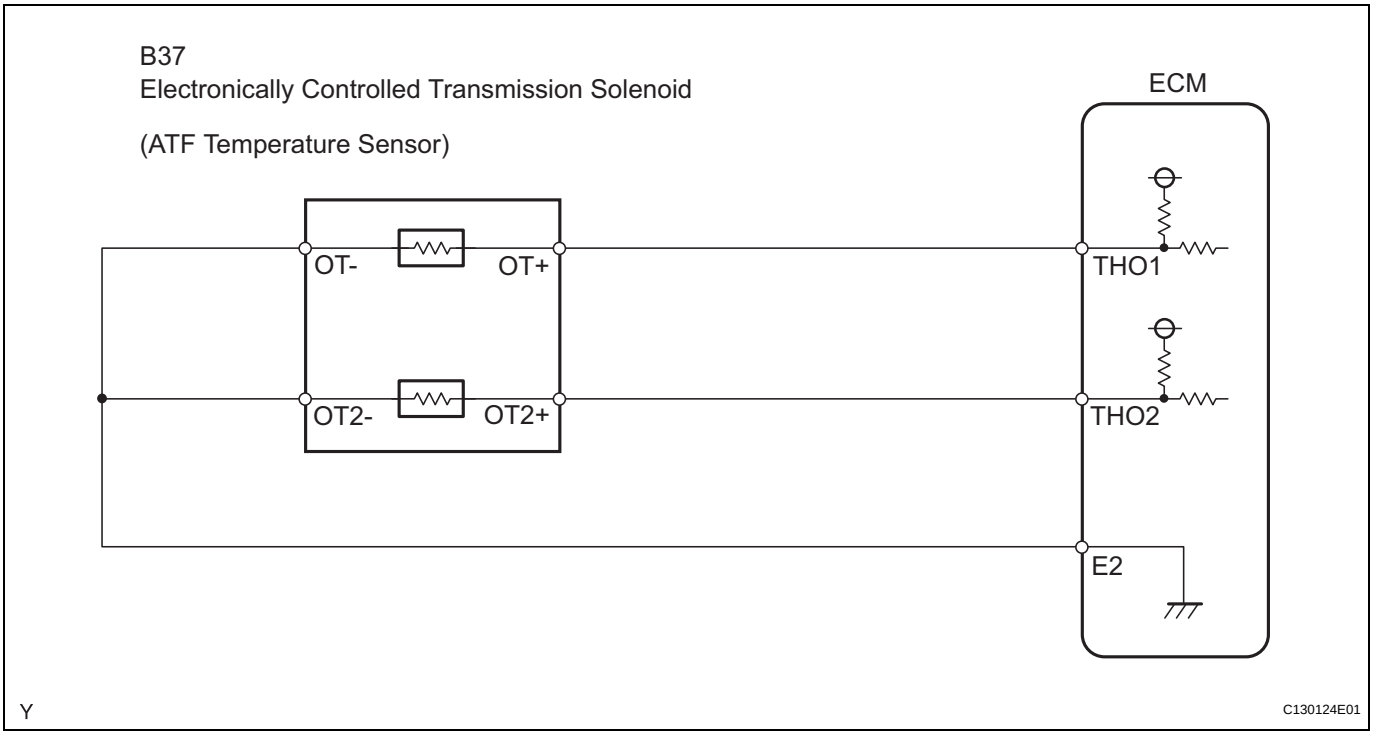

INSPECTION PROCEDURE

HINT:

According to the DATA LIST displayed on the intelligent tester, you can read the values of components, such as the switches, sensors, actuators, without removing any parts. Reading the DATA LIST as a first step of troubleshooting is one method of shortening labor time.

AT

NOTICE:

In the table below, the values listed under "Normal Condition" are for reference only. Do not depend solely on these reference values when judging whether a part is faulty or not.

1. Warm up the engine.
2. Turn the ignition switch off.
3. Connect the intelligent tester together with the CAN VIM (Controller Area Network Vehicle Interface Module) to the DLC3.
4. Turn the ignition switch to the ON position.
5. Push the "ON" button of the tester.
6. Select the items "DIAGNOSIS / ENHANCED OBD II / DATA LIST" / A/T.
7. According to the display on the tester, read the "DATA LIST".

Item	Measurement Item/ Range (display)	Normal Condition
AT OIL TEMP2	No. 2 ATF Temperature Sensor Value/ min.: -40°C (-40°F) max.: 215°C (419°F)	• After Stall Test: Approximately 80°C (176°F) • Equal to ambient temperature during cold soak

HINT:

When DTC P2742 is output and intelligent tester reading is 150°C (302°F) or more, there is a short circuit.
When DTC P2743 is output and intelligent tester reading is -40°C (-40°F), there is an open circuit.

Measure the resistance between terminal THO2 and the body ground.

Temperature Displayed	Malfunction
-40°C (-40°F)	Open circuit
150°C (302°F) or more	Short circuit

1 INSPECT TRANSMISSION WIRE (NO.2 ATF TEMPERATURE SENSOR)

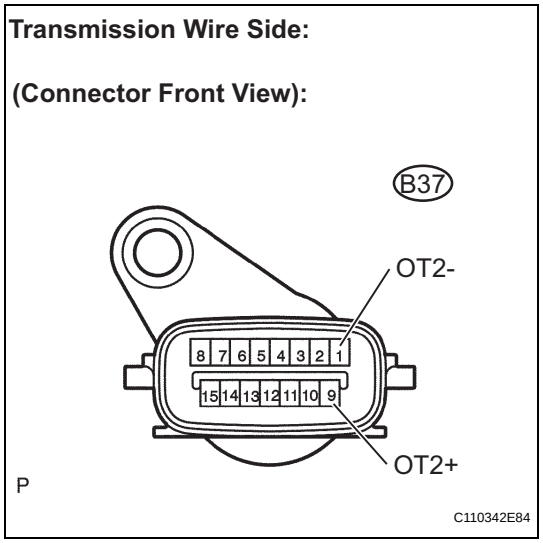

(a) Disconnect the transmission wire connector from the transmission.
(b) Measure the resistance.
Standard resistance

Tester Connection	Specified Condition
1 (OT2-) - 9 (OT2+)	79 Ω to 156 kΩ

(c) Measure the resistance.
Standard resistance (Check for short)

Tester Connection	Specified Condition
1 (OT2-) - Body ground	10 kΩ or higher
9 (OT2+) - Body ground	10 kΩ or higher

HINT:
If the resistance is outside the specified range at either of the ATF temperatures shown in the table below, the driveability of the vehicle may decrease.

ATF Temperature	Specified Condition
20°C (68°F)	3 to 5 kΩ
110°C (230°F)	0.22 to 0.28 kΩ

NG → **REPAIR OR REPLACE TRANSMISSION WIRE**

OK

2 CHECK HARNESS AND CONNECTOR (TRANSMISSION WIRE - ECM)

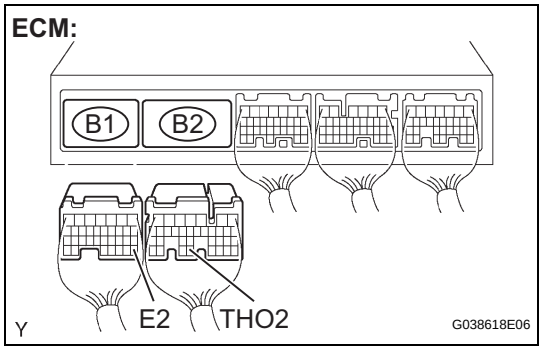

(a) Connect the transmission wire connector to the transmission.
(b) Disconnect the ECM connectors.
(c) Measure the resistance.
Standard resistance

Tester Connection	Specified Condition
B2-32 (THO2) - B1-28 (E2)	79 Ω to 156 kΩ

(d) Measure the resistance.
Standard resistance (Check for short)

Tester Connection	Specified Condition
B2-32 (THO2) - Body ground	10 kΩ or higher
B1-28 (E2) - Body ground	10 kΩ or higher

AT

NG → **REPAIR OR REPLACE HARNESS OR CONNECTOR**

OK

REPLACE ECM

DTC	P2757	Torque Converter Clutch Pressure Control Solenoid Performance (Shift Solenoid Valve SLU)

DESCRIPTION

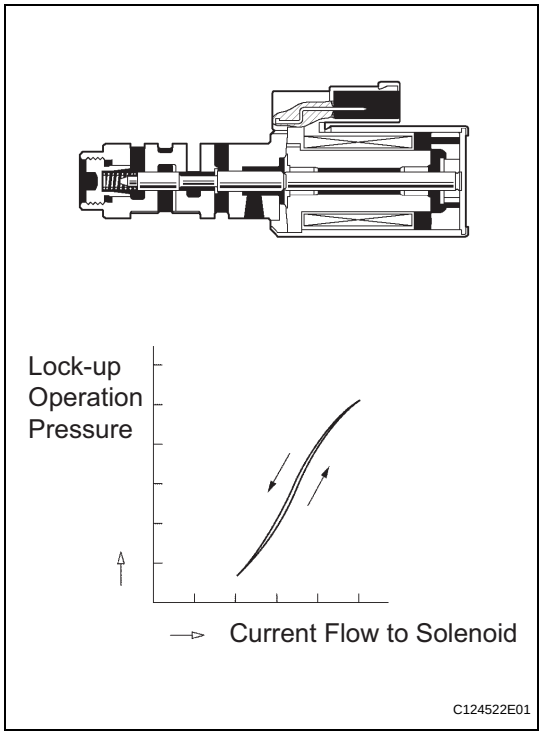

The ECM uses the signals from the throttle position sensor, mass air flow meter, turbine (input) speed sensor, output speed sensor and crankshaft position sensor, to monitor the engagement condition of the lock-up clutch.
Then the ECM compares the engagement condition of the lock-up clutch with the lock-up schedule in the ECM memory to detect any mechanical problems with the shift solenoid valve SLU, valve body or torque converter clutch.

AT

DTC No.	DTC Detection Conditions	Trouble Areas
P2757	Lock-up does not occur when driving in the lock-up range (normal driving at 50 mph [80 km/h]), or lock-up remains ON in the lock-up OFF range. (2-trip detection logic)	• Shift solenoid valve SLU remains open or closed • Valve body is blocked • Shift solenoid valve SLU • Torque converter clutch • Automatic transmission (clutch, brake or gear, etc.) • Line pressure is too low

MONITOR DESCRIPTION

Torque converter lock-up is controlled by the ECM based on turbine (input) speed sensor NT, output speed sensor SP2, the engine rpm, engine load, engine coolant temperature, vehicle speed, transmission fluid temperature, and gear selection. The ECM determines the lock-up status of the torque converter by comparing the engine rpm (NE) with the input turbine rpm (NT). The ECM calculates the actual transmission gear by comparing the input turbine rpm (NT) with the output shaft rpm (SP2). When the conditions are appropriate, the ECM requests "lock-up" by applying the control voltage to the shift solenoid SLU. When the SLU is turned on, solenoid SLU applies pressure to the lock-up relay valve and locks the torque converter clutch.
If the ECM detects no lock-up after lock-up has been requested or if it detects lock-up when it is not requested, the ECM interprets this as a fault in the shift solenoid valve SLU or lock-up system performance. The ECM turns on the MIL and stores the DTC.

Example:
When either of the following is met, the ECM interprets it as a malfunction.
1. There is a difference in rotation between before and after the torque converter even when the ECM requests lock-up.
   (Engine speed is at least 70 rpm greater than the input turbine speed.)
2. There is no difference in rotation between before and after the torque converter even when the ECM requests lock-up off.
   (The difference between the engine speed and input turbine speed is less than 35 rpm.)

MONITOR STRATEGY

Related DTCs	P2757: Shift solenoid valve SLU/OFF malfunction Shift solenoid valve SLU/ON malfunction
Required sensors/Components (Main)	Shift solenoid valve SLU
Required sensors/Components (Related)	Valve body, Vehicle speed sensor, Throttle position sensor, Speed sensor (NT), Speed sensor (SP2)
Frequency of operation	Continuous
Duration	OFF malfunction (A): 2 seconds OFF malfunction (B): 0.4 seconds ON malfunction: 1.8 seconds
MIL operation	2 driving cycles
Sequence of operation	None

TYPICAL ENABLING CONDITIONS

The following conditions are common to all OFF malfunctions (A), (B) and ON malfunction.

The monitor will run whenever the following DTCs are not present.	None
Turbine speed sensor (NT) circuit	No circuit malfunction
Output speed sensor (SP2) circuit	No circuit malfunction
Shift solenoid "A" (S1) circuit	No circuit malfunction
Shift solenoid "B" (S2) circuit	No circuit malfunction
Shift solenoid "E" (SR) circuit	No circuit malfunction
Torque converter clutch pressure control solenoid circuit	No circuit malfunction
Knock sensor circuit	No circuit malfunction
ETCS (Electronic Throttle Control System)	System not down
Transmission shift position	"D"
ECT (Engine Coolant Temperature)	40°C (104°F) or more
Spark advance from max. retard timing by knock sensor control	0° CA or more
Engine	Starting
ECM selected gear	4th or 5th
Vehicle speed	15.5 mph (25 km/h) or more
Shift solenoid "A" (S1) circuit	No circuit malfunction
Shift solenoid "B" (S2) circuit	No circuit malfunction
Pressure control solenoid "B" (SL2) circuit	No circuit malfunction
1-2 shift valve	No circuit malfunction
Transfer neutral position switch	OFF

OFF malfunction (A)

ECM lock-up command	ON (SLU pressure: 513 kPa or more)
Vehicle speed	Less than 62.2 mph (100 km/h)

OFF malfunction (B)

ECM selected gear	2nd
Vehicle speed	1.2 mph (2 km/h) or more
Output speed	2nd → 1st down shift point or more
Throttle valve opening angle	6.5 % or more at engine speed of 2,000 rpm (Conditions vary with engine speed)

ON malfunction

ECM lock-up command	OFF (SLU pressure: less than 4 kPa)
Throttle valve opening angle	7 % or more
Vehicle speed	4th gear: Less than 37.3 mph (60 km/h) (Conditions vary with gear position)

TYPICAL MALFUNCTION THRESHOLDS

Both of the following conditions are met: OFF malfunction (A) and (B)

OFF malfunction (A)

Engine speed - Turbine speed	70 rpm or more

OFF malfunction (B)

Turbine speed/Output speed	Not 3.30 to 7.50

[ON malfunction]
2 detections are necessary in 1 driving cycle.
1st detection; temporary flag ON
2nd detection; pending fault code ON
Vehicle speed must be under 6.2 mph (10 km/h) once before the 2nd detection.

ON malfunction

Difference between engine speed and turbine speed	Less than 35 rpm

INSPECTION PROCEDURE

AT

HINT:
Performing the ACTIVE TEST using the intelligent tester allows components, such as, the relay, VSV, and actuator, to be operated without removing any parts. Performing the ACTIVE TEST as a first step of troubleshooting is one method of shortening labor time.
It is possible to display the DATA LIST during the ACTIVE TEST.

1. Warm up the engine.
2. Turn the ignition switch off.
3. Connect the intelligent tester together with the CAN VIM (Controller Area Network Vehicle Interface Module) to the DLC3.
4. Turn the ignition switch to the ON position.
5. Push the "ON" button of the tester.
6. Clear the DTC.
7. Select the items "DIAGNOSIS / ENHANCED OBD II / ACTIVE TEST / LOCK UP".
8. According to the display on the tester, perform the "ACTIVE TEST".

Item	Test Details	Diagnostic Note
LOCK UP	[Test Details] Control the shift solenoid SLU to set the automatic transmission to the lock-up condition. [Vehicle Condition] Vehicle Speed: 36 mph (60 km/h) or more	Possible to check the SLU operation.

HINT:
This test can be conducted when the vehicle speed is 36 mph (60 km/h) or more.

9. Lightly depress the accelerator pedal and check that the engine speed does not change abruptly.

HINT:

- When changing the accelerator pedal opening angle while driving, if the engine speed does not change, lock-up is on.
- Slowly release, but not fully, the accelerator pedal in order to decelerate. (Fully releasing the pedal causes closure of the throttle valve and lock-up may be turned off automatically.)

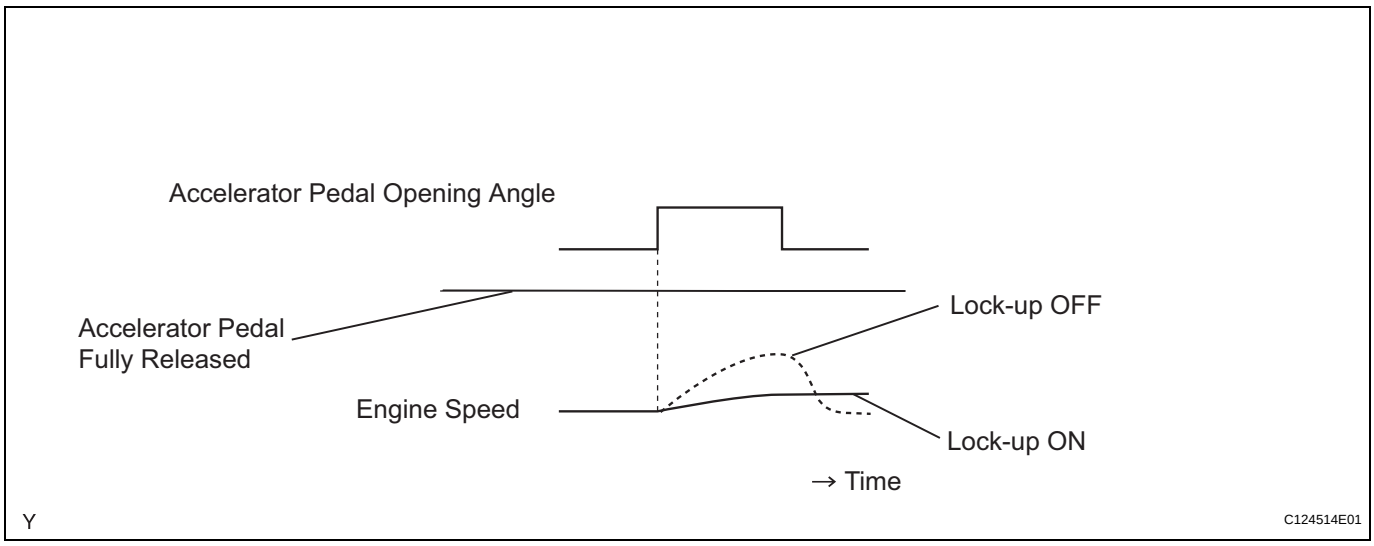

1	CHECK ANY OTHER DTCS OUTPUT (IN ADDITION TO DTC P2757)

(a) Connect the intelligent tester to the DLC3.
(b) Turn the ignition switch to the ON position and push the intelligent tester main switch ON.
(c) Select the items "DIAGNOSIS / ENHANCED OBD II / DTC INFO / CURRENT CODES".
(d) Read the DTCs using the intelligent tester.

Result:

Display (DTC Output)	Proceed to
Only "P2757" is output	A
P2757" and other DTCs	B

HINT:
If any codes besides "P2757" are output, perform troubleshooting for those DTCs first.

B → GO TO DTC CHART

A

2 **INSPECT SHIFT SOLENOID VALVE SLU**

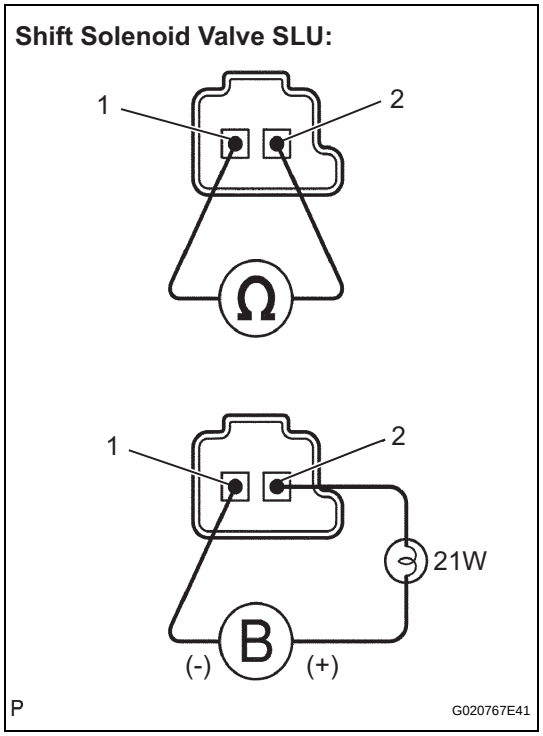

(a) Remove the shift solenoid valve SLU.
(b) Measure the resistance.
Standard resistance

Tester Connection	Specified Condition
1 - 2	5.0 to 5.6 Ω at 20°C (68°F)

(c) Connect the positive (+) lead with a 21 W bulb to terminal 2 and the negative (-) lead to terminal 1 of the solenoid valve connector, then check the movement of the valve.
OK:
The solenoid makes operating sounds.

NG → **REPLACE SHIFT SOLENOID VALVE SLU**

OK

3 **INSPECT TRANSMISSION VALVE BODY ASSEMBLY (See chapter 2 in the problem symptoms table)**

OK:
There are no foreign objects on any valves and they operate smoothly.

NG → **REPAIR OR REPLACE TRANSMISSION VALVE BODY ASSEMBLY**

OK

4 **INSPECT TORQUE CONVERTER CLUTCH ASSEMBLY**

(a) Inspect the torque converter clutch assembly (See page AT-179).
OK:
The torque converter clutch operates normally.

NG → **REPLACE TORQUE CONVERTER CLUTCH ASSEMBLY**

OK

REPAIR OR REPLACE AUTOMATIC TRANSMISSION ASSEMBLY

AT

DTC	P2759	Torque Converter Clutch Pressure Control Solenoid Control Circuit Electrical (Shift Solenoid Valve SLU)

DESCRIPTION

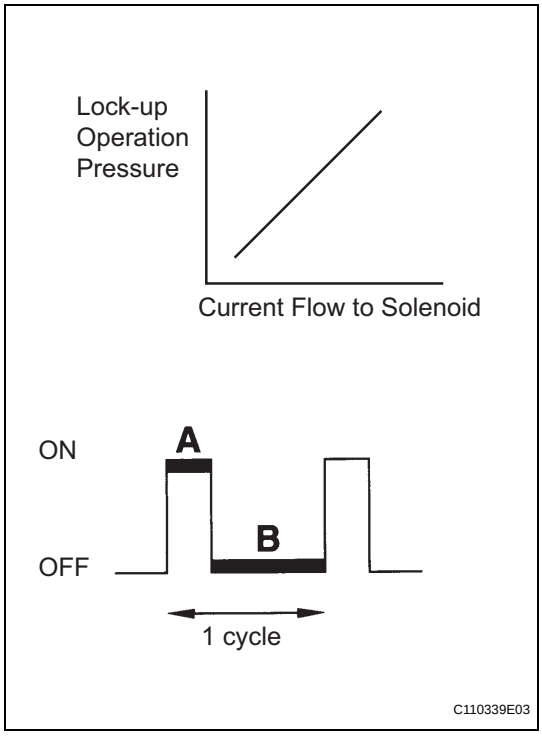

The current flow to the solenoid is controlled by the duty ratio* of the ECM output signal. The higher the duty ratio becomes, the higher the lock-up hydraulic pressure becomes during the lock-up operation.
*: The duty ratio is the ratio of the continuity to non-continuity in one cycle.
For example, if A is the period of continuity in one cycle, and B is the period of non-continuity, then Duty Ratio = A/(A+B) x 100(%).

AT

DTC No.	DTC Detection Conditions	Trouble Areas
P2759	Open or short is detected in shift solenoid valve SLU circuit for 1 second or more while driving (1-trip detection logic)	• Open or short in shift solenoid valve SLU circuit • Shift solenoid valve SLU • ECM

MONITOR DESCRIPTION

When an open or short is detected in the shift solenoid valve (SLU) circuit, the ECM determines that there is a malfunction. The ECM turns on the MIL and stores this DTC.

MONITOR STRATEGY

Related DTCs	P2759: Shift solenoid valve SLU/Range check
Required sensors/Components	Shift solenoid valve SLU
Frequency of operation	Continuous
Duration	Condition (A) and (B): 1 second
MIL operation	Immediate
Sequence of operation	None

TYPICAL ENABLING CONDITIONS

The following conditions are common to Condition (A) and (B).

The monitor will run whenever the following DTCs are not present.	None
Ignition switch	ON
Starter	OFF

Condition (A)

Solenoid current cut status	Not cut
Battery voltage	11 V or more

Condition (B)

Battery voltage	8 V or more

TYPICAL MALFUNCTION THRESHOLDS

Either of the following conditions is met: Condition (A) or (B)

Condition (A)

Solenoid status (SLU) from Hybrid IC	Fail

Condition (B)

Hybrid IC status	Fail

COMPONENT OPERATING RANGE

Shift solenoid valve SLU	Resistance: 5.0 to 5.6 Ω at 20°C (68°F)

WIRING DIAGRAM

B37
Electronically Controlled Transmission Solenoid

(Shift Solenoid Valve SLU)

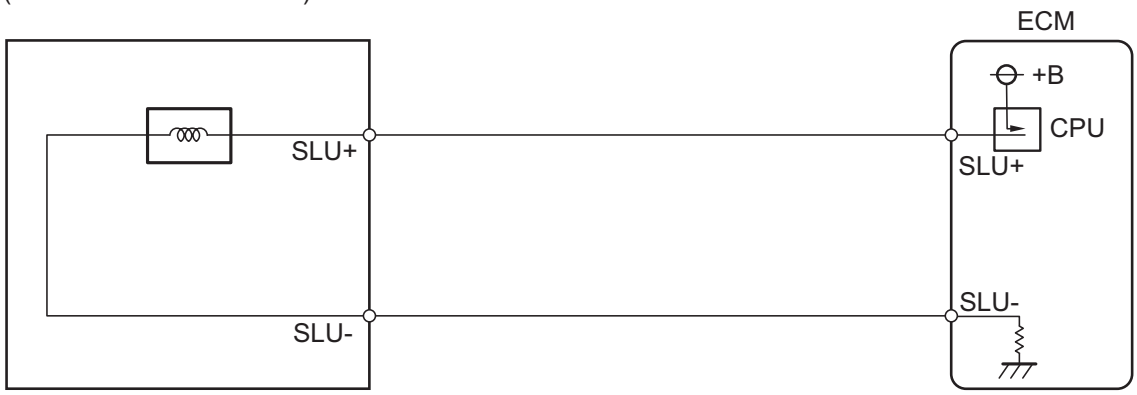

Y

C130126E03

AT

INSPECTION PROCEDURE

1	INSPECT TRANSMISSION WIRE (SLU)

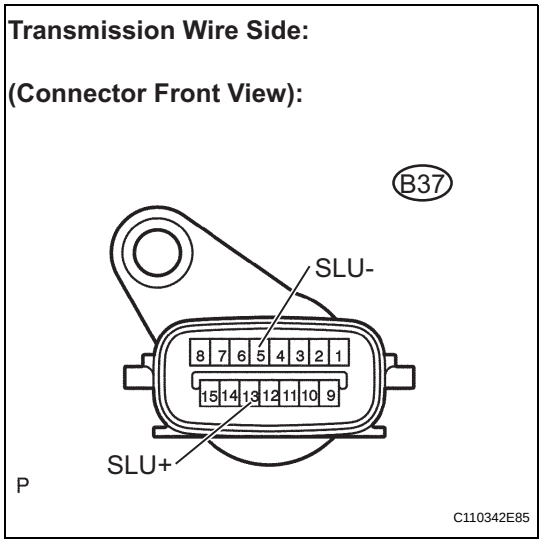

(a) Disconnect the transmission wire connector from the transmission.
(b) Measure the resistance.
Standard resistance

Tester Connection	Specified Condition
13 (SLU+) - 5 (SLU-)	5.0 to 5.6 Ω at 20°C (68°F)

(c) Measure the resistance.
Standard resistance (Check for short)

Tester Connection	Specified Condition
13 (SLU+) - Body ground	10 kΩ or higher
5 (SLU-) - Body ground	10 kΩ or higher

NG → **Go to step 3**

OK

2	CHECK HARNESS AND CONNECTOR (TRANSMISSION WIRE - ECM)

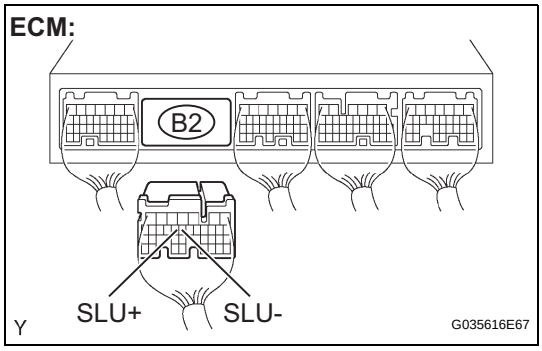

(a) Connect the transmission wire connector to the transmission.
(b) Disconnect the ECM connector.
(c) Measure the resistance.
Standard resistance

Tester Connection	Specified Condition
B2-15 (SLU+) - B2-14 (SLU-)	5.0 to 5.6 Ω at 20°C (68°F)

(d) Measure the resistance.
Standard resistance (Check for short)

Tester Connection	Specified Condition
B2-15 (SLU+) - Body ground	10 kΩ or higher
B2-14 (SLU-) - Body ground	10 kΩ or higher

NG → **REPAIR OR REPLACE HARNESS OR CONNECTOR**

OK

REPLACE ECM

AT

3	INSPECT SHIFT SOLENOID VALVE SLU

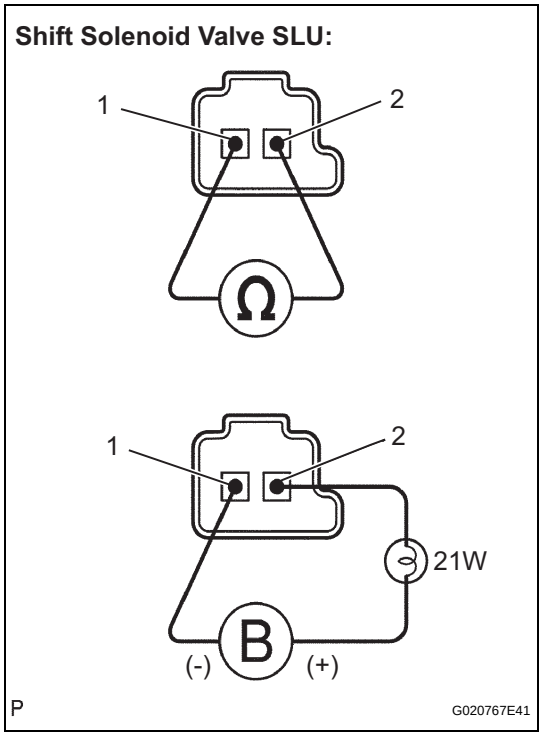

(a) Remove the shift solenoid valve SLU.
(b) Measure the resistance.
Standard resistance

Tester Connection	Specified Condition
1 - 2	5.0 to 5.6 Ω at 20°C (68°F)

(c) Connect the positive (+) lead with a 21 W bulb to terminal 2 and the negative (-) lead to terminal 1 of the solenoid valve connector, then check the movement of the valve.
OK:
The solenoid makes operating sounds.

NG → **REPLACE SHIFT SOLENOID VALVE SLU**

OK

REPAIR OR REPLACE TRANSMISSION WIRE

AT

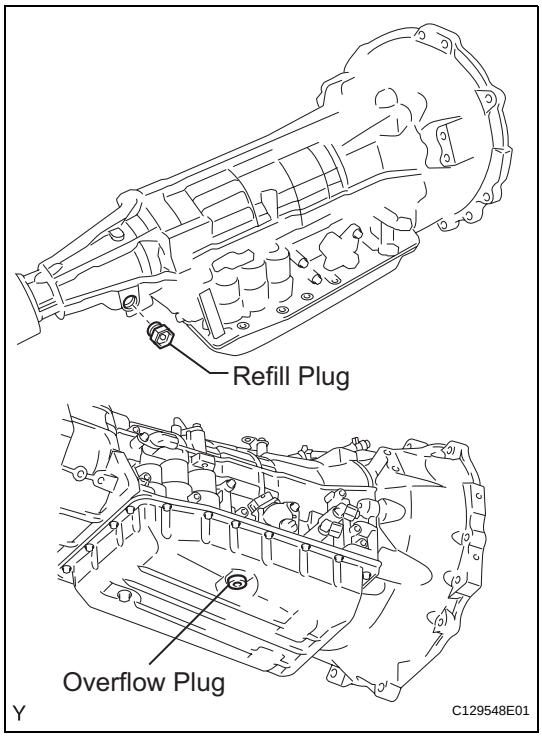

AUTOMATIC TRANSMISSION FLUID

ADJUSTMENT

1. BEFORE REFILL TRANSMISSION

- This transmission requires Toyota Genuine ATF WS transmission fluid.
- After servicing the transmission, you must refill the transmission with the correct amount of fluid.
- Maintain the vehicle in a horizontal position while adjusting the fluid level.
- If the transmission pan, drain plug, valve body or torque converter is replaced, proceed to the "transmission pan fill" procedures.
- If the transmission hose or output shaft oil seal is replaced, remove the refill plug and proceed to the "transmission fill" procedures.
- If the entire transmission is replaced, proceed to the "fluid circulation" procedures.

  HINT:

  New transmissions are already filled with transmission fluid.

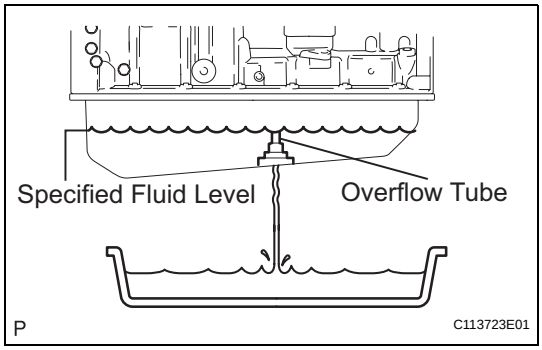

2. TRANSMISSION PAN FILL

(a) Remove the refill plug and overflow plug.

(b) Fill the transmission through the refill hole until fluid begins to trickle out of the overflow tube.

(c) Reinstall the overflow plug.

3. TRANSMISSION FILL

(a) Fill the transmission with the amount of fluid listed in the table below.

(b) Reinstall the refill plug to prevent the fuel from splashing.

Standard capacity

Repair	Fill Amount
Transmission hose and pipe removal	0.6 liters (0.63 US qts, 0.53 lmp.qts)
Output shaft oil seal replacement	0.4 liters (0.42 US qts, 0.35 lmp.qts)
Transmission pan and drain plug removal	1.7 liters (1.8 US qts, 1.5 lmp.qts)
Transmission valve body removal	4.3 liters (4.54 US qts, 3.78 lmp.qts)
Torque converter removal	5.4 liters (5.71 US qts, 4.75 lmp.qts)

HINT:

If the amount of fluid listed in the table cannot be added, perform the next step.

(c) When the amount of fluid listed in table cannot be added:

(1) Install the refill plug.

(2) Allow the engine to idle with the air conditioning OFF.

(3) Move the shift lever through the entire gear range to circulate fluid.

(4) Wait for 30 seconds with the engine idling.

AT

(5) Stop the engine.
(6) Remove the refill plug and add fluid.
(7) Reinstall the refill plug.

4. FLUID CIRCULATION

(a) Allow the engine to idle with the air conditioning OFF.
(b) Move the shift lever through the entire gear range to circulate fluid.
(c) Allow the engine to idle until the fluid temperature reaches 46°C (115°F). Proceed to the step to the next to check fluid temperature.
HINT:
The fluid temperature should be less than 30°C (86°F) before starting the engine.

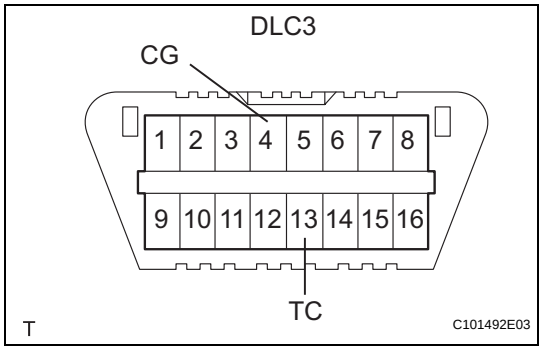

5. FLUID TEMPERATURE CHECK

(a) Using SST, connect terminals TC and CG of the DLC3.
SST 09843-18040
(b) Move the shift lever back and forth between N and D at 1.5 second intervals for 6 seconds.

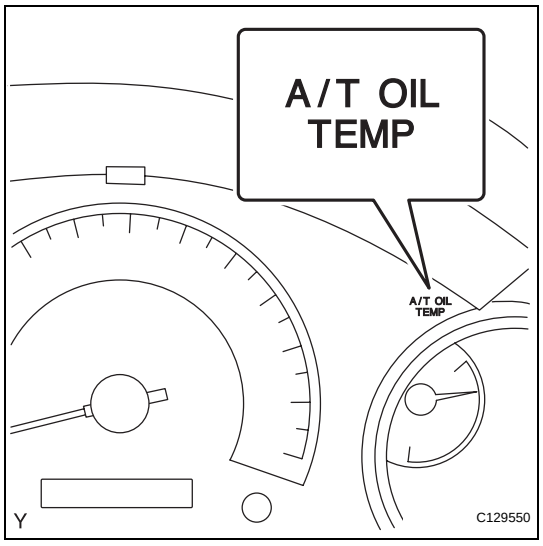

(c) The A/T OIL TEMP indicator turns on for 2 seconds when the combination meter starts to detect the fluid temperature.
(d) The A/T OIL TEMP indicator turns on again when the fluid temperature reaches 46°C (115°F) and blinks when it exceeds 56°C (130°F).

AT

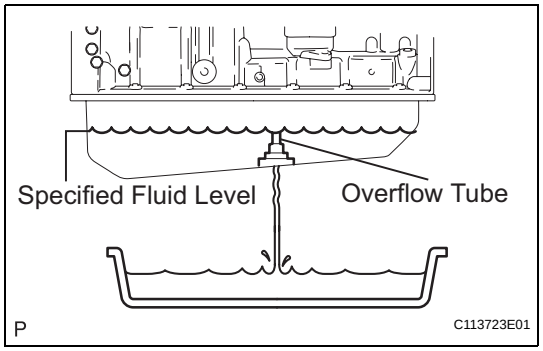

6. FLUID LEVEL CHECK

NOTICE:

- **The fluid temperature must be between 46°C (115°F) and 56°C (130°F) to check the fluid level.**
- **Do not insert the fill nozzle into the refill hole more than 30 mm (1.2 in.), to avoid contact with the moving parts.**

(a) Remove the overflow plug with the engine idling.
(b) Check that the fluid comes out of the overflow tube.
(c) Wait until the overflow slows to a trickle.
If fluid does not come out, perform the following.
(1) Install the overflow plug.

(2) Stop the engine.
(3) Remove the refill plug.
(4) Add 0.4 liters (0.21 US qts, 0.18 lmp qts) of fluid.
(5) Allow the engine to idle.
(6) Remove the overflow plug.
(7) Wait until fluid begins to trickle out of the overflow tube.

EXTENSION HOUSING REAR OIL SEAL

COMPONENTS

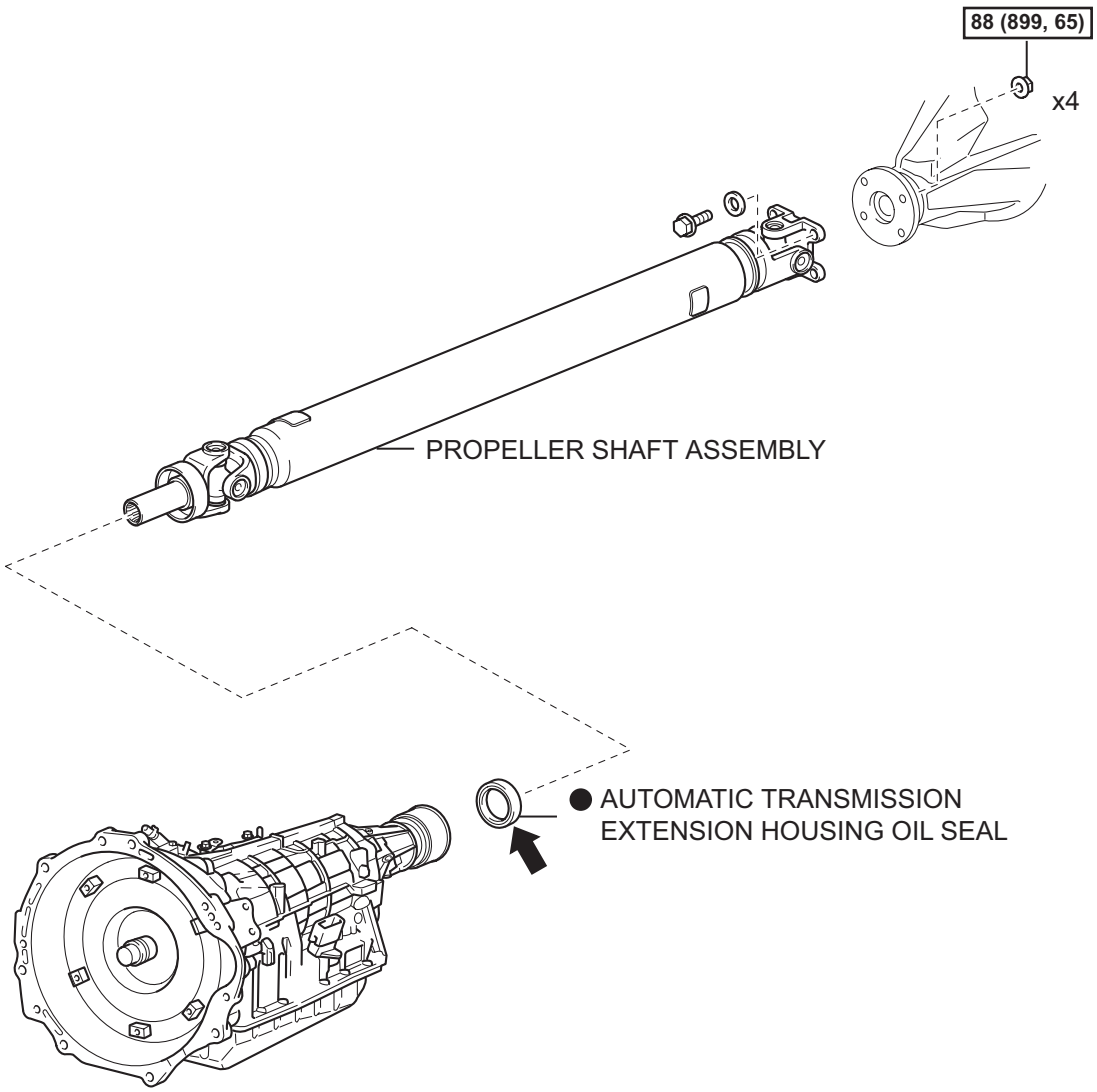

N*m (kgf*cm, ft*lbf) :Specified torque

● Non-reusable part ⬅ Apply MP grease

Y

C129553E01

AT

REMOVAL

1. **REMOVE PROPELLER SHAFT ASSEMBLY (See page PR-9)**

2. **DRAIN AUTOMATIC TRANSMISSION FLUID**
   (a) Remove the drain plug and gasket, and drain ATF.
   (b) Install a new gasket and the drain plug.
   Torque: 28 N*m (285 kgf*cm, 21 ft.*lbf)

3. **REMOVE AUTOMATIC TRANSMISSION EXTENSION HOUSING OIL SEAL**
   (a) Using SST, remove the oil seal.
   SST 09308-00010

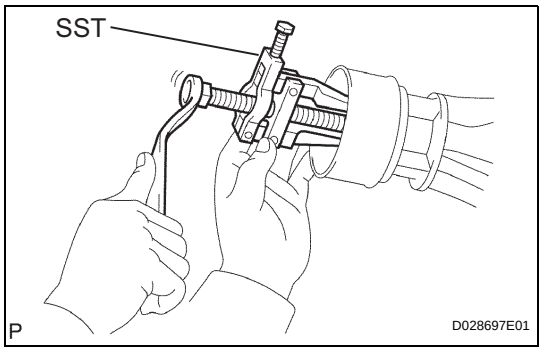

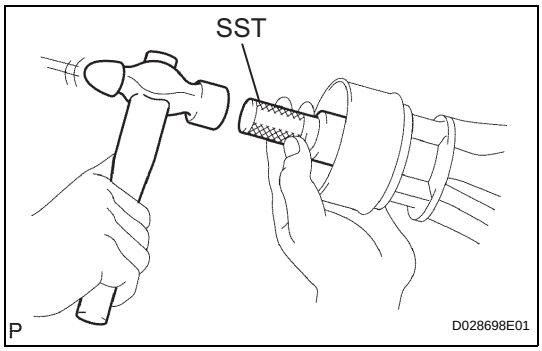

INSTALLATION

1. **INSTALL AUTOMATIC TRANSMISSION EXTENSION HOUSING OIL SEAL**
   (a) Coat the lip of the oil seal with MP grease.
   (b) Using SST and a hammer, carefully tap in a new oil seal in as far as possible.
   SST 09325-40010
   Oil seal depth from flat end:
   5.4 to 5.8 mm (0.213 to 0.228 in.)

2. **INSTALL PROPELLER SHAFT ASSEMBLY (See page PR-14)**

3. **ADJUST AUTOMATIC TRANSMISSION FLUID**
   (See page AT-140)

AT

SPEED SENSOR

COMPONENTS

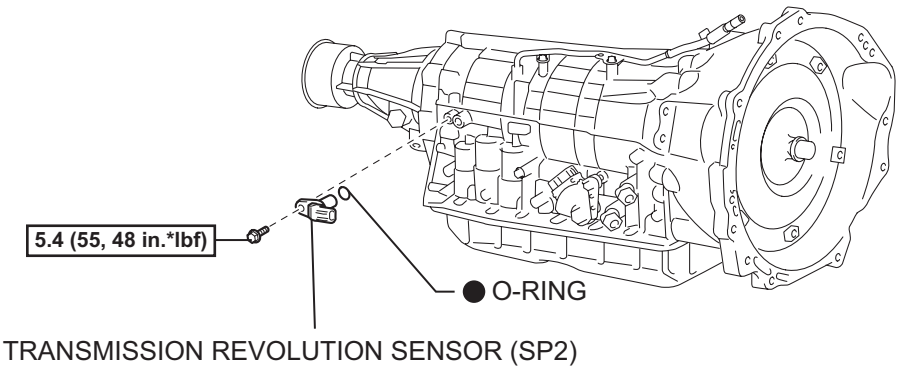

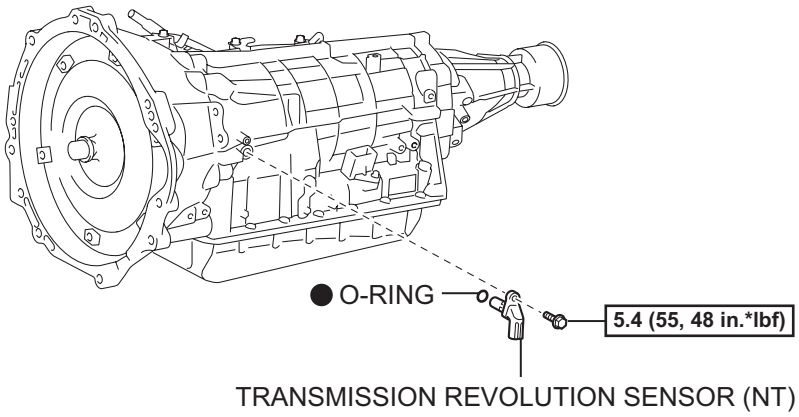

AT

N*m (kgf*cm, ft*lbf) :Specified torque

● Non-reusable part

Y

C129549E02

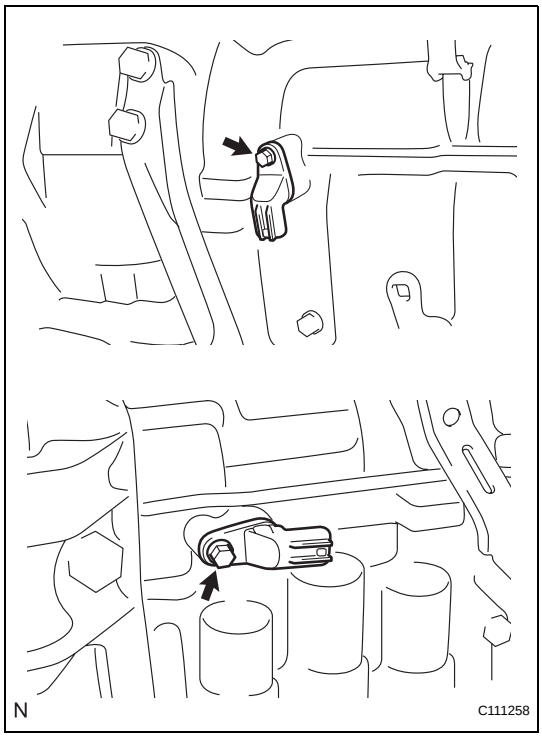

REMOVAL

1. REMOVE TRANSMISSION REVOLUTION SENSOR

(a) Disconnect the 2 sensor connectors.
(b) Remove the 2 bolts and transmission revolution sensors.
(c) Remove the O-ring from each sensor.

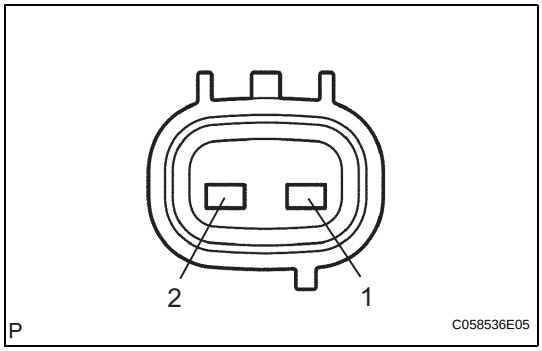

INSPECTION

1. INSPECT TRANSMISSION REVOLUTION SENSOR (NT)

(a) Measure the resistance of the sensor.
Standard resistance

Tester Connection	Condition	Specified Condition
1 - 2	20°C (68°F)	560 to 680 Ω

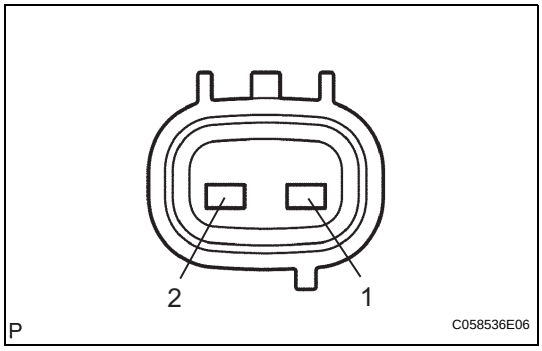

2. INSPECT TRANSMISSION REVOLUTION SENSOR (SP2)

(a) Measure the resistance of the sensor.
Standard resistance

Tester Connection	Condition	Specified Condition
1 - 2	20°C (68°F)	560 to 680 Ω

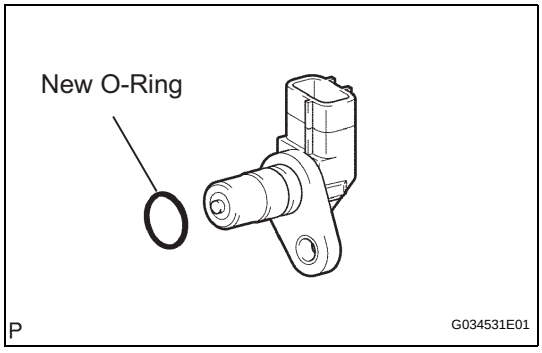

INSTALLATION

1. INSTALL TRANSMISSION REVOLUTION SENSOR

(a) Coat 2 new O-rings with ATF and install one onto each transmission revolution sensor.

AT

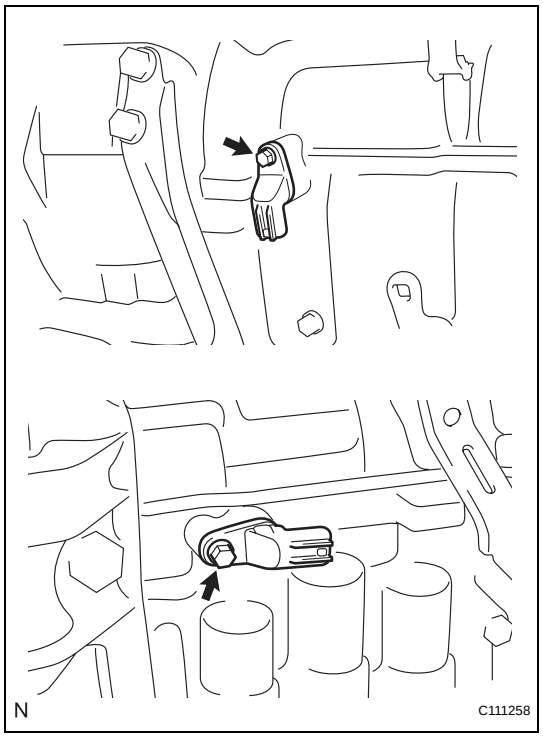

(b) Install the 2 transmission revolution sensors with the 2 bolts.
Torque: 5.4 N*m (55 kgf*cm, 48 in.*lbf)
(c) Connect the 2 sensor connectors.

TRANSMISSION WIRE

COMPONENTS

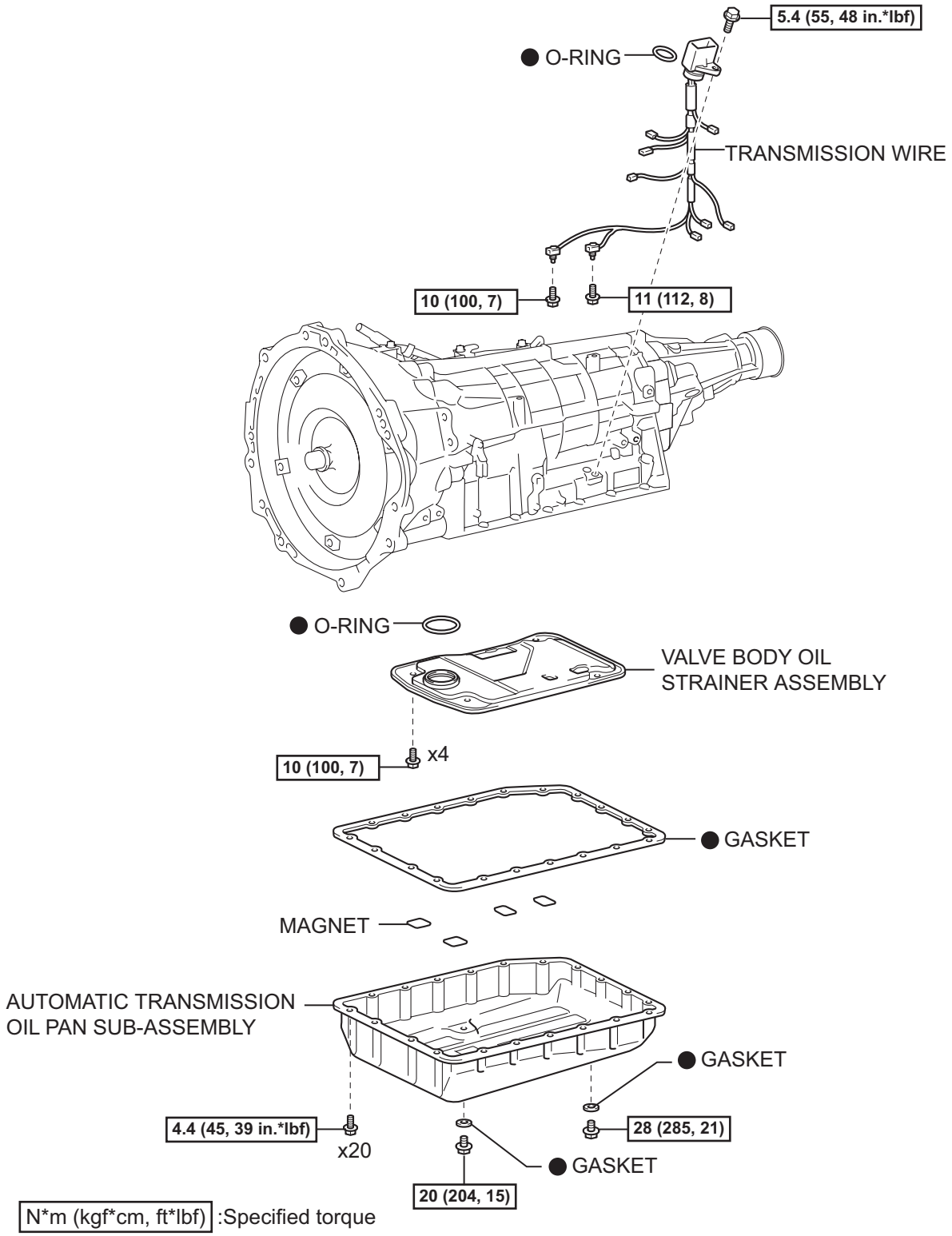

AT

REMOVAL

1. DISCONNECT CABLE FROM NEGATIVE BATTERY TERMINAL

2. DRAIN AUTOMATIC TRANSMISSION FLUID

(a) Remove the drain plug and gasket, and drain ATF.

(b) Install a new gasket and the drain plug.

Torque: 28 N*m (285 kgf*cm, 21 ft.*lbf)

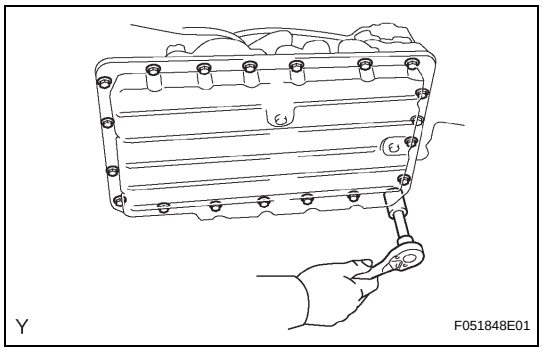

3. REMOVE AUTOMATIC TRANSMISSION OIL PAN SUB-ASSEMBLY

NOTICE:

Some fluid will remain in the oil pan.

(a) Remove the 20 bolts and the oil pan.

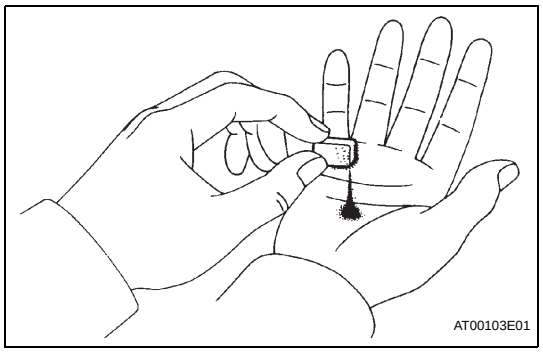

(b) Examine the particles in the pan.

(1) Remove the magnets and use them to collect steel particles. Carefully inspect the foreign matter and particles in the pan and on the magnets to anticipate the type of wear you will find in the transmission.

Steel (magnetic): bearing, gear and clutch plate wear

Brass (non-magnetic): bushing wear

4. REMOVE VALVE BODY OIL STRAINER ASSEMBLY

(a) Remove the 4 bolts and the oil strainer.

NOTICE:

Be careful as some fluid will come out of the oil strainer.

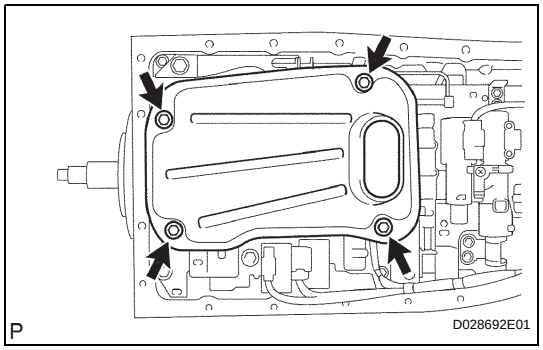

5. SEPARATE TRANSMISSION WIRE

(a) Remove the 2 bolts and 2 clamps.

(b) Disconnect the ATF temperature sensor.

(c) Disconnect the 7 connectors from the solenoid valves.

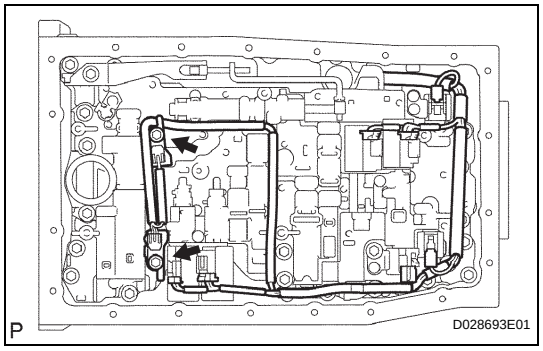

AT

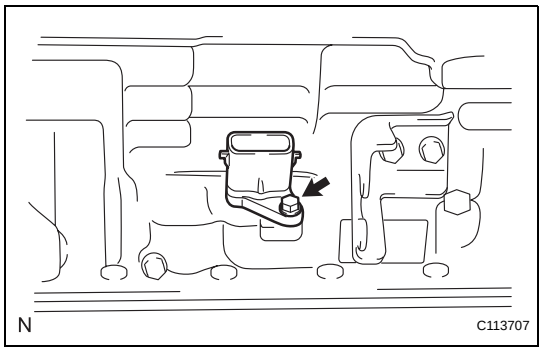

6. REMOVE TRANSMISSION WIRE

(a) Disconnect the transmission wire connector.

(b) Remove the bolt and pull out the transmission wire.

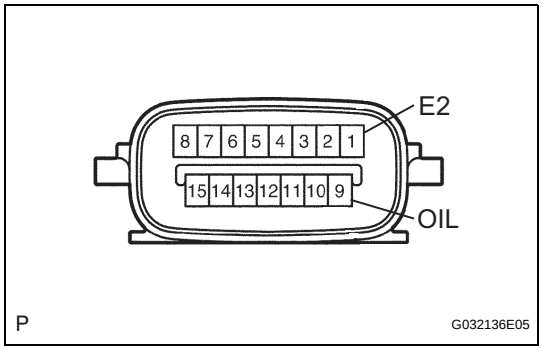

INSPECTION

1. INSPECT TRANSMISSION WIRE

(a) Using an ohmmeter, measure the resistance between the terminals.

Standard resistance

Tester Connection	Specified Condition
1 (E2) - 9 (OIL)	3 to 4 kΩ at 20 °C (68°F)
1 (E2) - 9 (OIL)	0.22 to 0.28 kΩ at 110°C (230°F)

INSTALLATION

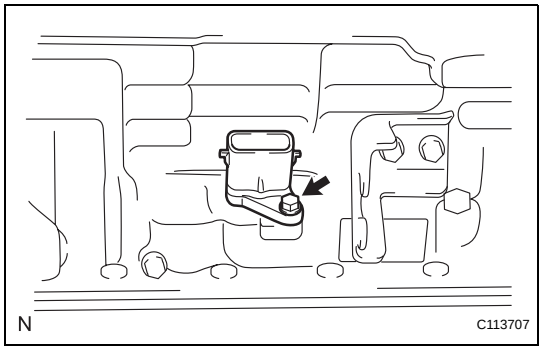

1. INSTALL TRANSMISSION WIRE

(a) Install the transmission wire with the bolt.

Torque: 5.4 N*m (55 kgf*cm, 48 in.*lbf)

(b) Connect the transmission wire connector.

AT

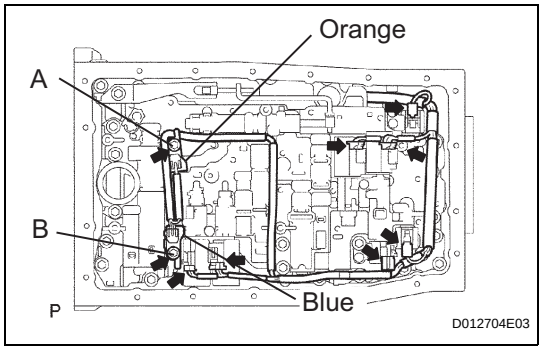

2. CONNECT TRANSMISSION WIRE

(a) Connect the 7 connectors to the solenoid valves.

(b) Install the 2 clamps with the 2 bolts.

Torque: 10 N*m (100 kgf*cm, 7 ft.*lbf) for bolt A
11 N*m (112 kgf*cm, 8 ft.*lbf) for bolt B

Bolt length:
12 mm (0.47 in.) for bolt A
36 mm (1.42 in.) for bolt B

(c) Connect the ATF temperature sensor.

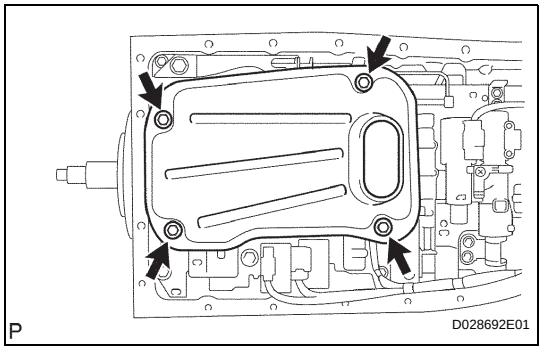

3. INSTALL VALVE BODY OIL STRAINER ASSEMBLY

(a) Install a new O-ring and oil strainer with the 4 bolts.

Torque: 10 N*m (100 kgf*cm, 7 ft.*lbf)

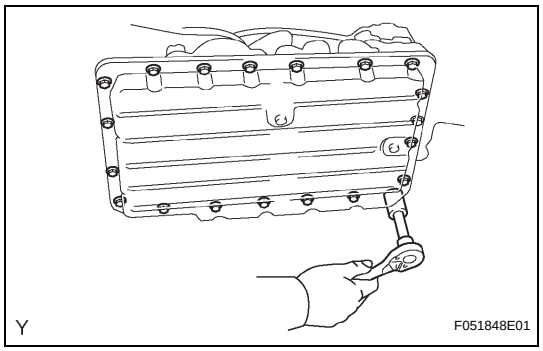

4. **INSTALL AUTOMATIC TRANSMISSION OIL PAN SUB-ASSEMBLY**
   HINT:
   Remove the gasket and be careful not to spill oil on the contacting surfaces of the transmission case and oil pan.
   (a) Install the oil pan with the 20 bolts.
   Torque: 4.4 N*m (45 kgf*cm, 39 in.*lbf)

5. **CONNECT CABLE TO NEGATIVE BATTERY TERMINAL**
   Torque: 3.9 N*m (40 kgf*cm, 35 in.*lbf)

6. **PERFORM INITIALIZATION**
   (See page AT-19)

7. **ADJUST AUTOMATIC TRANSMISSION FLUID**
   (See page AT-140)

PARK / NEUTRAL POSITION SWITCH

COMPONENTS

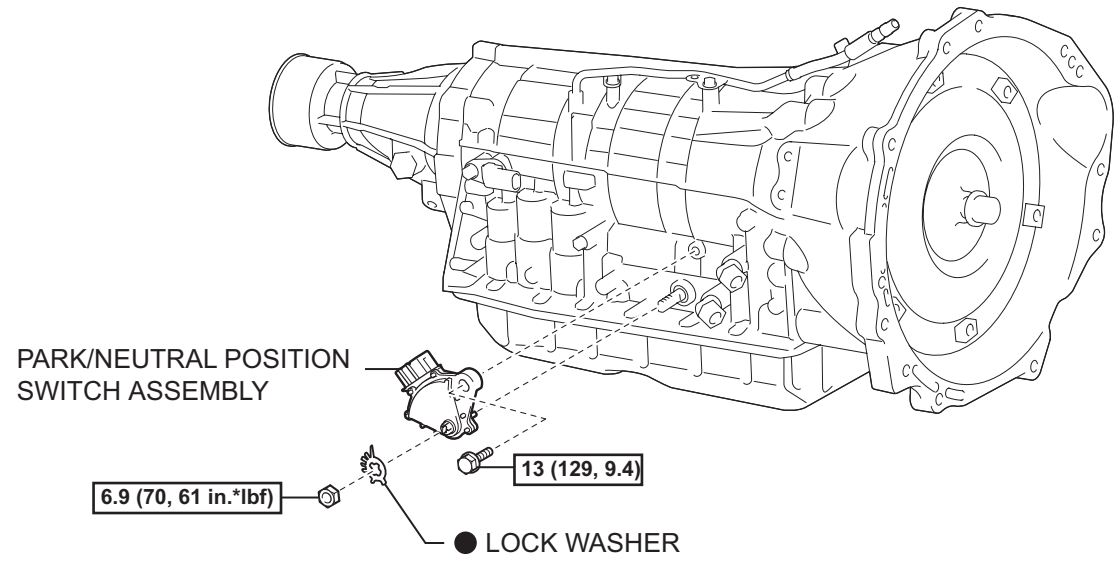

AT

N*m (kgf*cm, ft*lbf) :Specified torque

● Non-reusable part

P

C111262E03

ON-VEHICLE INSPECTION

1. INSPECT PARK/NEUTRAL POSITION SWITCH ASSEMBLY

(a) Apply the parking brake and turn the ignition switch ON.

(b) Depress the brake pedal and check that the engine starts when the shift lever is in N or P, but does not start in other positions.

(c) Check that the back-up light illuminates and the reverse warning buzzer sounds when the shift lever is in R, but not in other positions.

REMOVAL

1. **DISCONNECT CABLE FROM NEGATIVE BATTERY TERMINAL**
2. **DISCONNECT PARK/NEUTRAL POSITION SWITCH CONNECTOR**
3. **REMOVE PARK/NEUTRAL POSITION SWITCH ASSEMBLY**
   (a) Using a screwdriver, pry out the lock washer.
   (b) Remove the lock nut and lock washer.
   (c) Remove the bolt and park/neutral position switch.

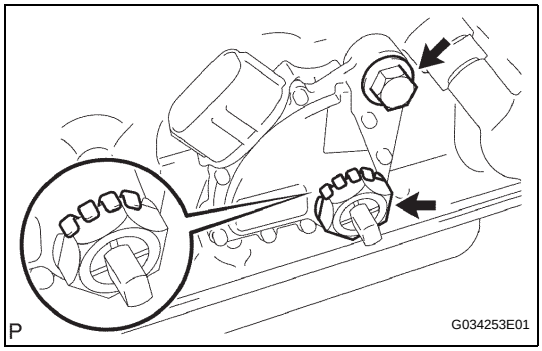

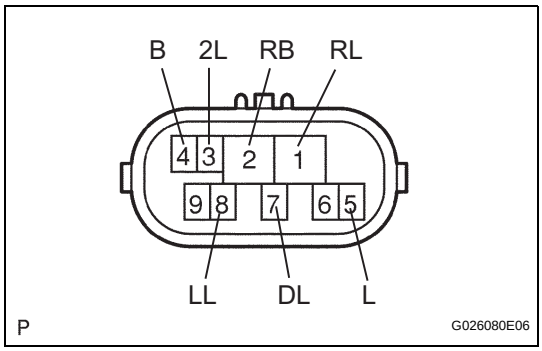

INSPECTION

1. **INSPECT PARK/NEUTRAL POSITION SWITCH**
   (a) Measure the resistance of the PNP switch when the shift lever is moved to each position.
   Standard resistance

Tester Connection	Shift Lever Position	Specified Condition
4 (B) - 5 (L)	P or N	Below 1 Ω
4 (B) - 5 (L)	Except P and N	10 kΩ or higher
1 (RL) - 2 (RB)	R	Below 1 Ω
1 (RL) - 2 (RB)	Except R	10 kΩ or higher
2 (RB) - 7 (DL)	D	Below 1 Ω
2 (RB) - 7 (DL)	Except D	10 kΩ or higher
2 (RB) - 3 (2L)	2	Below 1 Ω
2 (RB) - 3 (2L)	Except 2	10 kΩ or higher
2 (RB) - 8 (LL)	L	Below 1 Ω
2 (RB) - 8 (LL)	Except L	10 kΩ or higher

ADJUSTMENT

1. **ADJUST PARK/NEUTRAL POSITION SWITCH ASSEMBLY**
   (a) Loosen the park/neutral position switch bolt and move the shift lever to N.
   (b) Align the switch groove with the neutral basic line.
   (c) Hold the switch in position and tighten the bolt.
   Torque: 13 N*m (129 kgf*cm, 9.4 ft.*lbf)
   (d) After adjustment, perform the inspection.

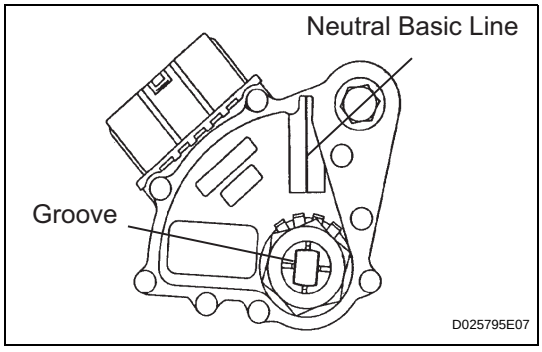

AT

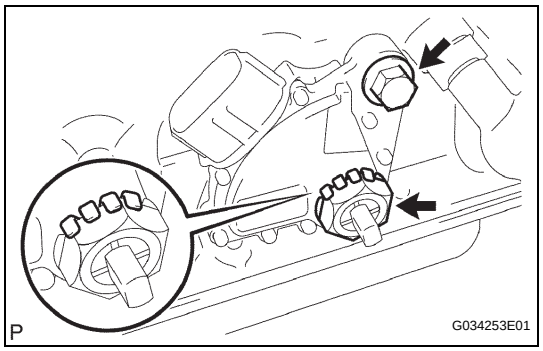

INSTALLATION

1. **INSTALL PARK/NEUTRAL POSITION SWITCH ASSEMBLY**
   (a) Install the park/neutral position switch onto the manual valve shaft.
   (b) Temporarily install the bolt.
   (c) Install a new lock washer and the nut.
   Torque: 6.9 N*m (70 kgf*cm, 61 in.*lbf)

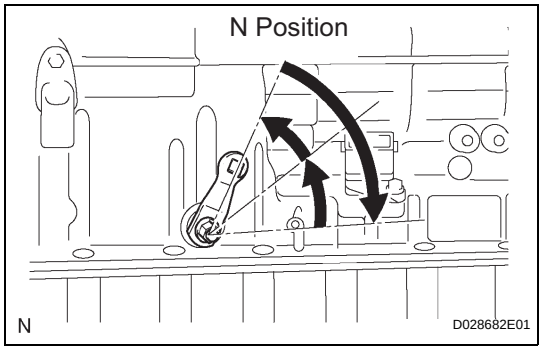

   (d) Push the control shaft rearward as much as possible.
   (e) Return the control shaft lever 2 notches to the N position.

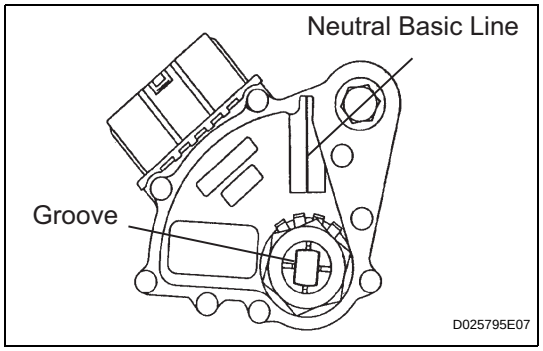

   (f) Align the neutral basic line with the switch groove, and tighten the bolt.
   Torque: 13 N*m (129 kgf*cm, 9.4 ft.*lbf)
   (g) Using a screwdriver, bend the tabs of the lock washer.

2. **CONNECT PARK / NEUTRAL POSITION SWITCH CONNECTOR**

3. **CONNECT CABLE TO NEGATIVE BATTERY TERMINAL**
   Torque: 3.9 N*m (40 kgf*cm, 35 in.*lbf)

4. **PERFORM INITIALIZATION**
   (See page AT-19)

5. **INSPECT SHIFT LEVER POSITION (See page AT-166)**

6. **ADJUST SHIFT LEVER POSITION (See page AT-167)**

7. **INSPECT PARK/NEUTRAL POSITION SWITCH ASSEMBLY (See page AT-153)**

AT

VALVE BODY ASSEMBLY

COMPONENTS

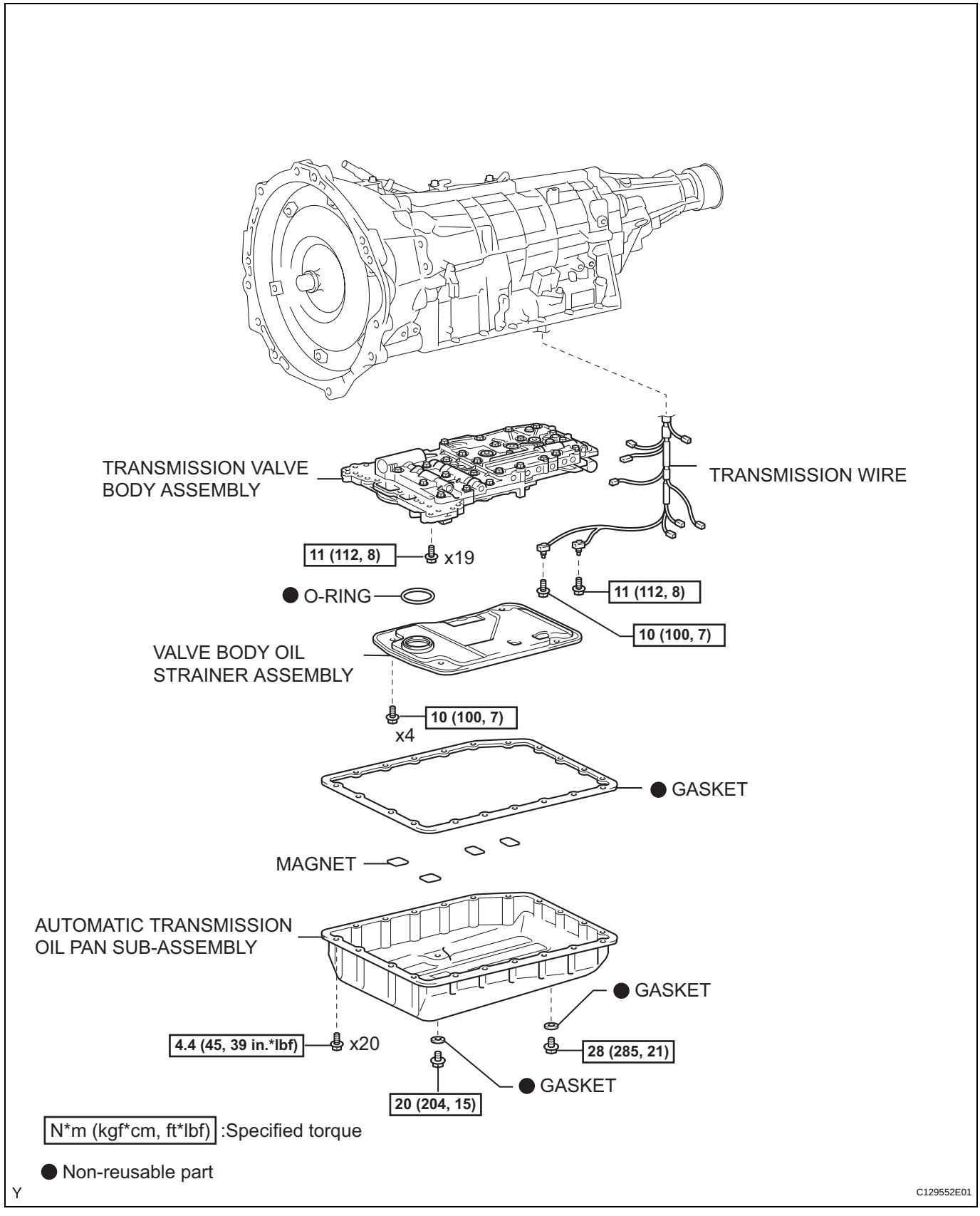

AT

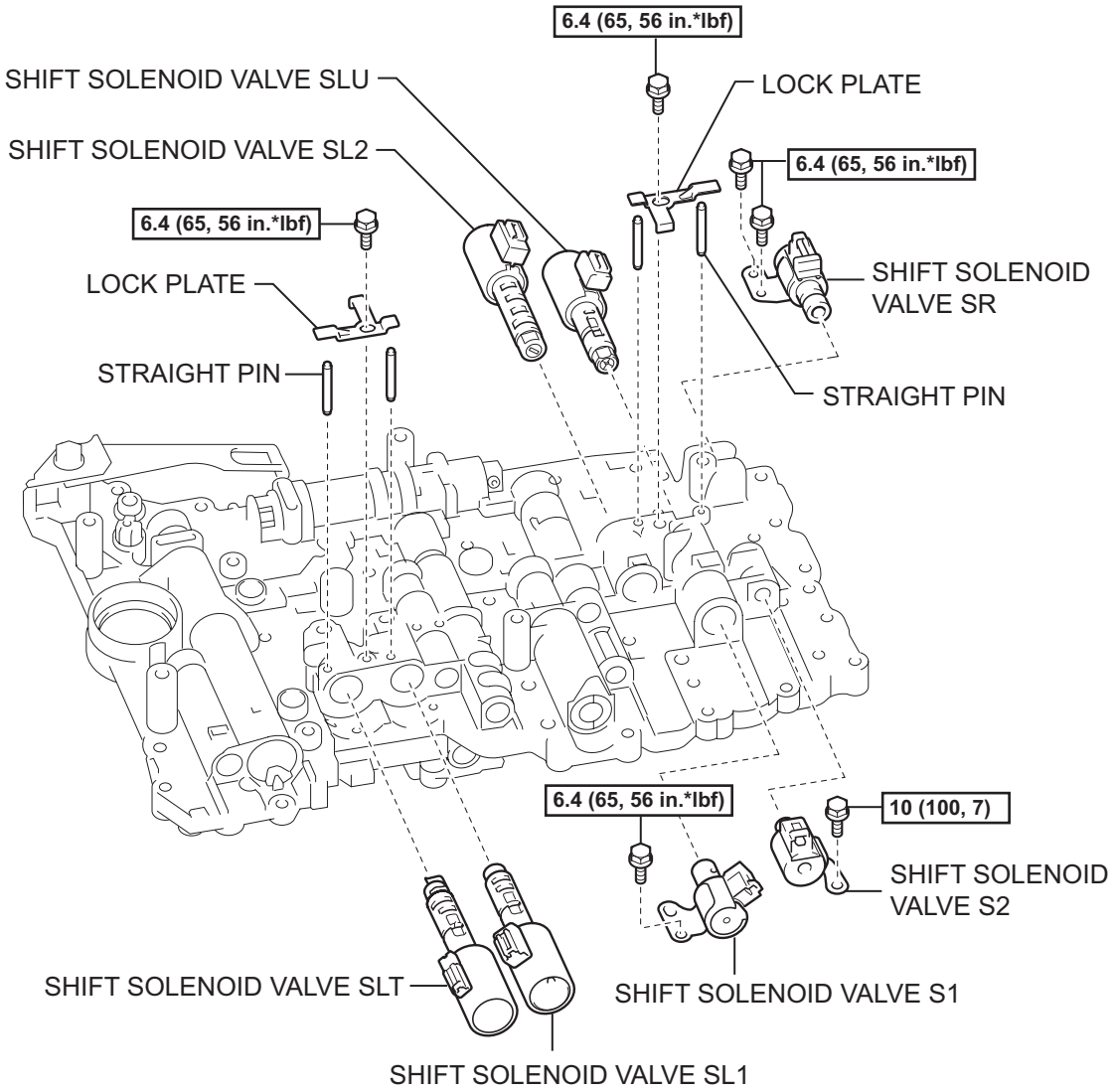

AT

N*m (kgf*cm, ft*lbf) :Specified torque

P

C112831E03

REMOVAL

1. DISCONNECT CABLE FROM NEGATIVE BATTERY TERMINAL

2. DRAIN AUTOMATIC TRANSMISSION FLUID

(a) Remove the drain plug and gasket, and drain ATF.

(b) Install a new gasket and the drain plug.
Torque: 28 N*m (285 kgf*cm, 21 ft.*lbf)

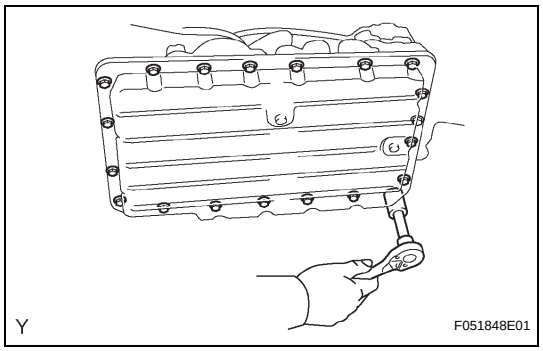

3. REMOVE AUTOMATIC TRANSMISSION OIL PAN SUB-ASSEMBLY
NOTICE:
Some fluid will remain in the oil pan.

(a) Remove the 20 bolts and oil pan.

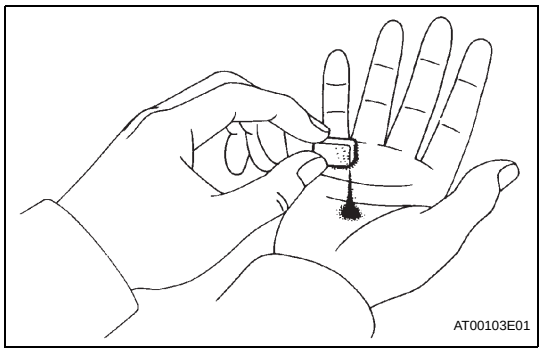

(b) Examine the particles in the oil pan.

(1) Remove all the magnets and use them to collect steel particles. Carefully look at the foreign matter and particles in the pan and on the magnets to determine the type of wear you will find in the transmission.
Steel (magnetic): bearing, gear and clutch plate wear
Brass (non-magnetic): bushing wear

4. REMOVE VALVE BODY OIL STRAINER ASSEMBLY

(a) Remove the 4 bolts and oil strainer.
NOTICE:
Be careful as some fluid may leak out of the oil strainer.

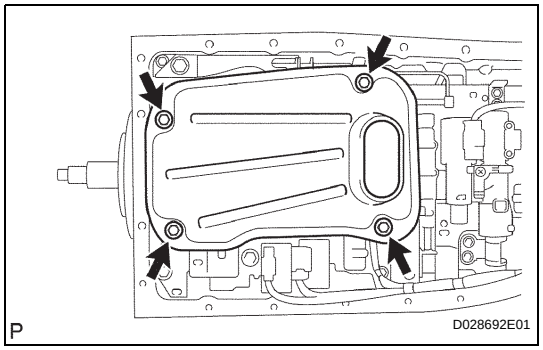

5. DISCONNECT TRANSMISSION WIRE

(a) Remove the 2 bolts and 2 clamps.

(b) Disconnect the ATF temperature sensor.

(c) Disconnect the 7 connectors from the solenoid valves.

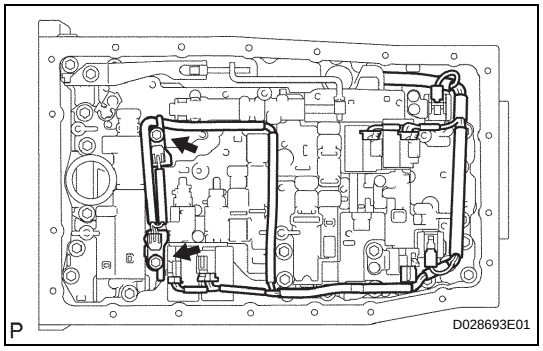

AT

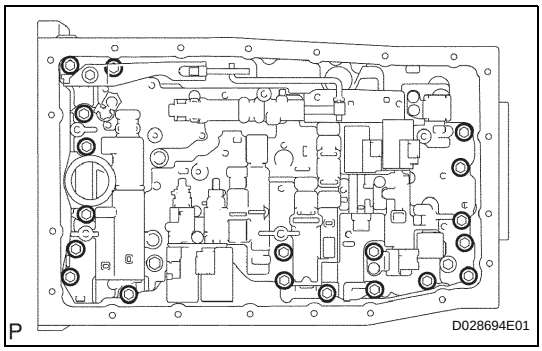

6. REMOVE TRANSMISSION VALVE BODY ASSEMBLY

(a) Remove the 19 bolts and valve body.
(b) Remove the 3 drum seal gaskets.

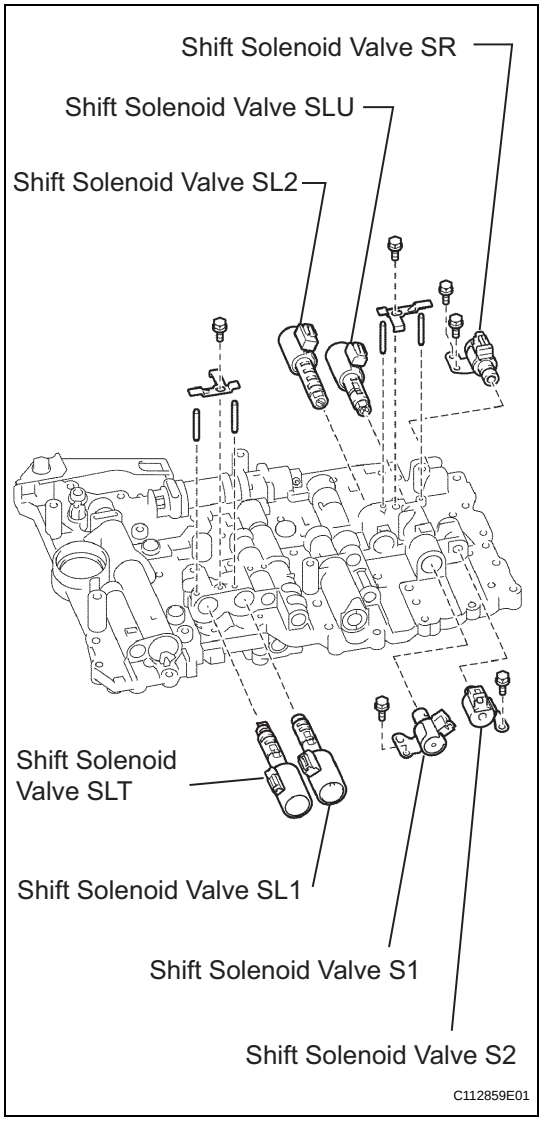

DISASSEMBLY

1. REMOVE SHIFT SOLENOID VALVE

(a) Remove the bolt, lock plate, 2 pins and shift solenoid valves SLT and SL1.
(b) Remove the bolt, lock plate, 2 pins and shift solenoid valves SLU and SL2.
(c) Remove the 2 bolts and shift solenoid valve SR.
(d) Remove the bolt and shift solenoid valve S1.
(e) Remove the bolt and shift solenoid valve S2.

AT

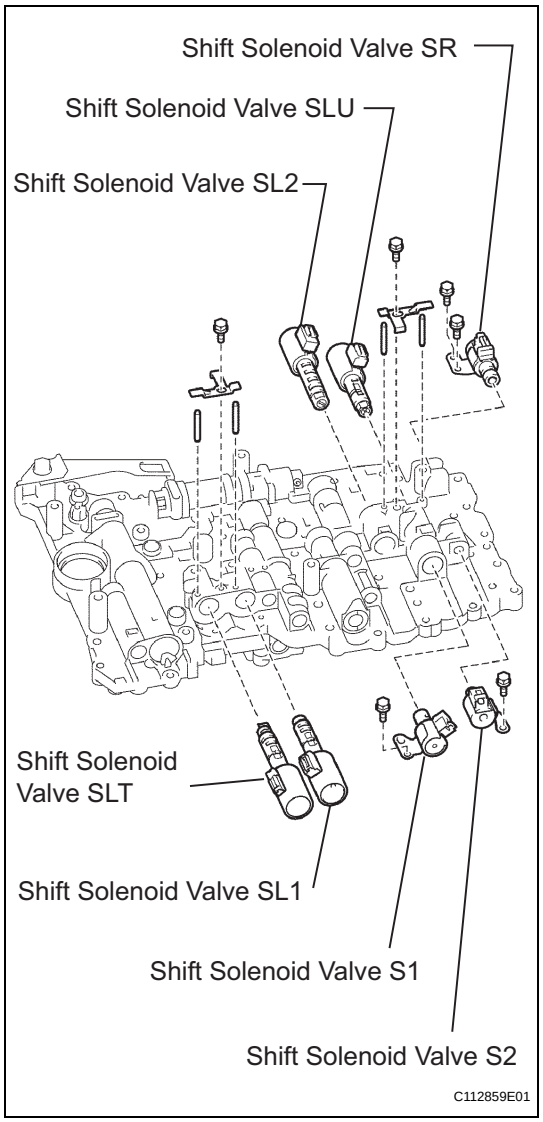

REASSEMBLY

1. INSTALL SHIFT SOLENOID VALVE

(a) Install the shift solenoid valve S2 with the bolt.
Torque: 10 N*m (100 kgf*cm, 7 ft.*lbf)

(b) Install the shift solenoid valve S1 with the bolt.
Torque: 6.4 N*m (65 kgf*cm, 56 in.*lbf)

(c) Install the shift solenoid valve SR with the 2 bolts.
Torque: 6.4 N*m (65 kgf*cm, 56 in.*lbf)

(d) Install the shift solenoid valves SLU and SL2 with the 2 pins, lock plate and bolt.
Torque: 6.4 N*m (65 kgf*cm, 56 in.*lbf)

(e) Install the shift solenoid valves SLT and SL1 with the 2 pins, lock plate and bolt.
Torque: 6.4 N*m (65 kgf*cm, 56 in.*lbf)

AT

INSTALLATION

1. INSTALL TRANSMISSION VALVE BODY ASSEMBLY

(a) Insert the pin of the lever into the hole of the manual valve.

(b) Install 3 new drum seal gaskets onto the transmission case.

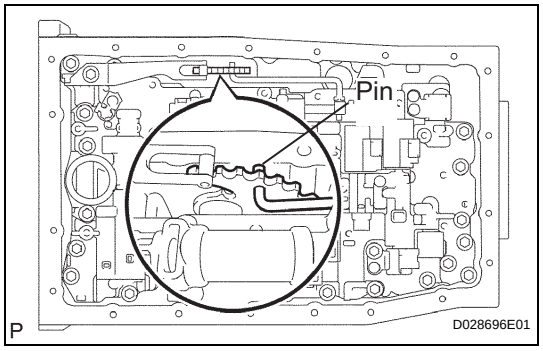

(c) Install the 19 bolts.
Torque: 11 N*m (112 kgf*cm, 8 ft.*lbf)
HINT:
Bolt length:
36 mm (1.42 in.) for bolt A
25 mm (0.98 in.) for bolt B

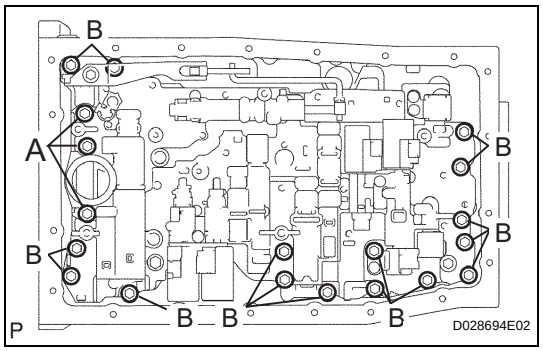

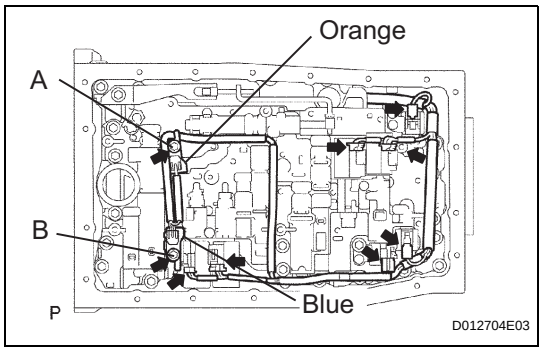

2. CONNECT TRANSMISSION WIRE

(a) Connect the 7 connectors to the solenoid valves.

(b) Install the 2 clamps with the 2 bolts.

Torque: 10 N*m (100 kgf*cm, 7 in.*lbf) for bolt A
11 N*m (112 kgf*cm, 8 ft.*lbf) for bolt B

Bolt length:
12 mm (0.47 in.) for bolt A
36 mm (1.42 in.) for bolt B

(c) Connect the ATF temperature sensor.

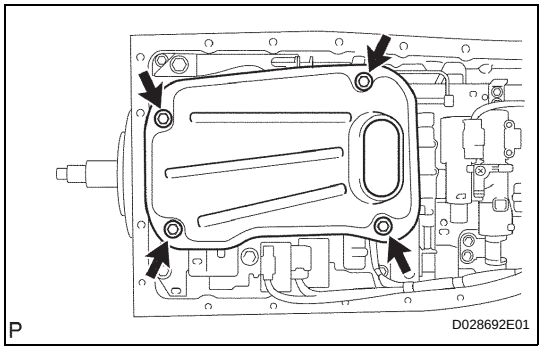

3. INSTALL VALVE BODY OIL STRAINER ASSEMBLY

(a) Install a new O-ring and the oil strainer with the 4 bolts.

Torque: 10 N*m (100 kgf*cm, 7 ft.*lbf)

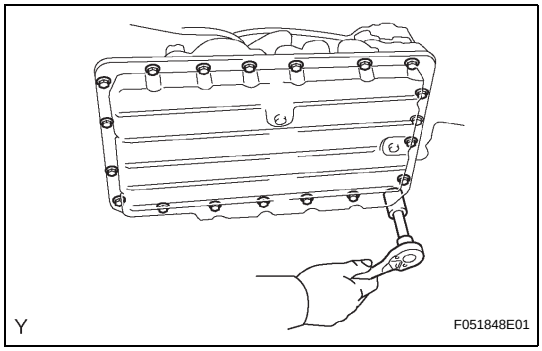

4. INSTALL AUTOMATIC TRANSMISSION OIL PAN SUB-ASSEMBLY

HINT:
Remove the gasket and be careful not to spill oil on the contacting surfaces of the transmission case and oil pan.

(a) Install a new gasket and the oil pan with the 20 bolts.

Torque: 4.4 N*m (45 kgf*cm, 39 in.*lbf)

5. CONNECT CABLE TO NEGATIVE BATTERY TERMINAL

Torque: 3.9 N*m (40 kgf*cm, 35 in.*lbf)

6. PERFORM INITIALIZATION

(See page AT-19)

7. ADJUST AUTOMATIC TRANSMISSION FLUID

(See page AT-140)

SHIFT LOCK SYSTEM

ON-VEHICLE INSPECTION

1. CHECK SHIFT LOCK OPERATION

(a) Shift the shift lever to the P position.
(b) Turn the ignition switch to LOCK.
(c) Check that the shift lever cannot be shifted to any positions other than P.
(d) Turn the ignition switch to ON, depress the brake pedal, and check that the shift lever can be shifted to other positions.

2. CHECK SHIFT LOCK RELEASE LINK OPERATION

(a) Using a small screwdriver, remove the shift lever cap.
(b) When operating the shift lever with the shift lock release link pressed, check that the lever can be shifted to any positions other than P.

3. CHECK KEY INTERLOCK OPERATION

(a) Turn the ignition switch to ON.
(b) Depress the brake pedal and shift the shift lever to any positions other than P.
(c) Check that the ignition key cannot be turned to LOCK.
(d) Shift the shift lever to the P position, turn the ignition key to LOCK, and check that the ignition key can be removed.

4. INSPECT SHIFT LOCK CONTROL ECU SUB-ASSEMBLY

(a) Using a voltmeter, measure the voltage of the connector.
HINT:
Do not disconnect the shift lock control ECU connector.

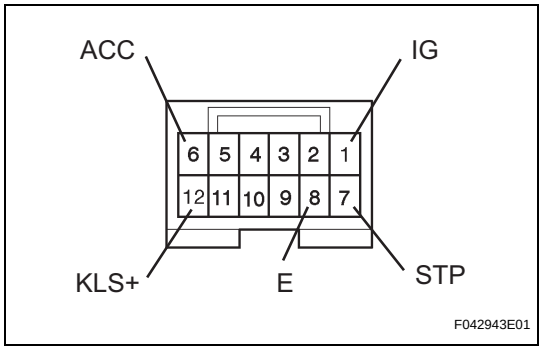

Tester Connection	Condition	Specified Condition (V)
12 (KLS+) - 8 (E)	Ignition switch ACC and P position	0
	Ignition switch ACC and except P position	7.5 to 11
	Ignition switch ACC and except P position (After approx. 1 second)	6 to 9
6 (ACC) - 8 (E)	Ignition switch ON	10 to 14
	Ignition switch ACC	10 to 14
	Ignition switch OFF	0
7 (STP) - 8 (E)	Depress brake pedal	10 to 14
	Release brake pedal	0
1 (IG) - 8 (E)	Ignition switch ON	10 to 14
	Ignition switch OFF	0

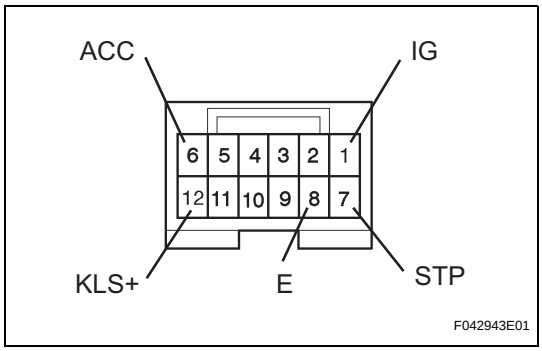

(b) Using an ohmmeter, measure the resistance at terminal E (8) and body ground.
HINT:
Do not disconnect the shift lock control ECU connector.

Tester Connection	Condition	Specified Condition
8 (E) - Body ground	Always	Below 1 Ω

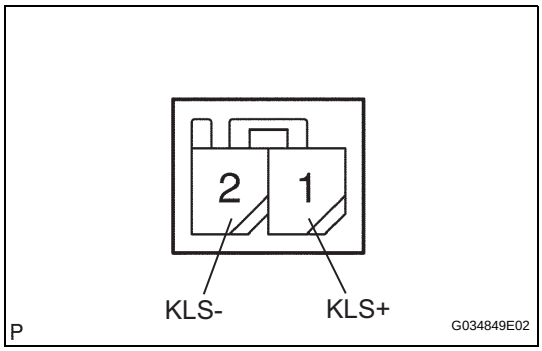

5. INSPECT KEY INTER LOCK SOLENOID

(a) Disconnect the solenoid connector.
(b) Connect KLS+ (1) terminal to the battery positive (+) terminal, and KLS- (2) terminal to the battery negative (-) terminal, and apply about 12 V between KLS+ and KLS- terminals.
Check that operation noise can be heard from the solenoid.
If the solenoid does not operate, replace the solenoid.

FLOOR SHIFT ASSEMBLY

COMPONENTS

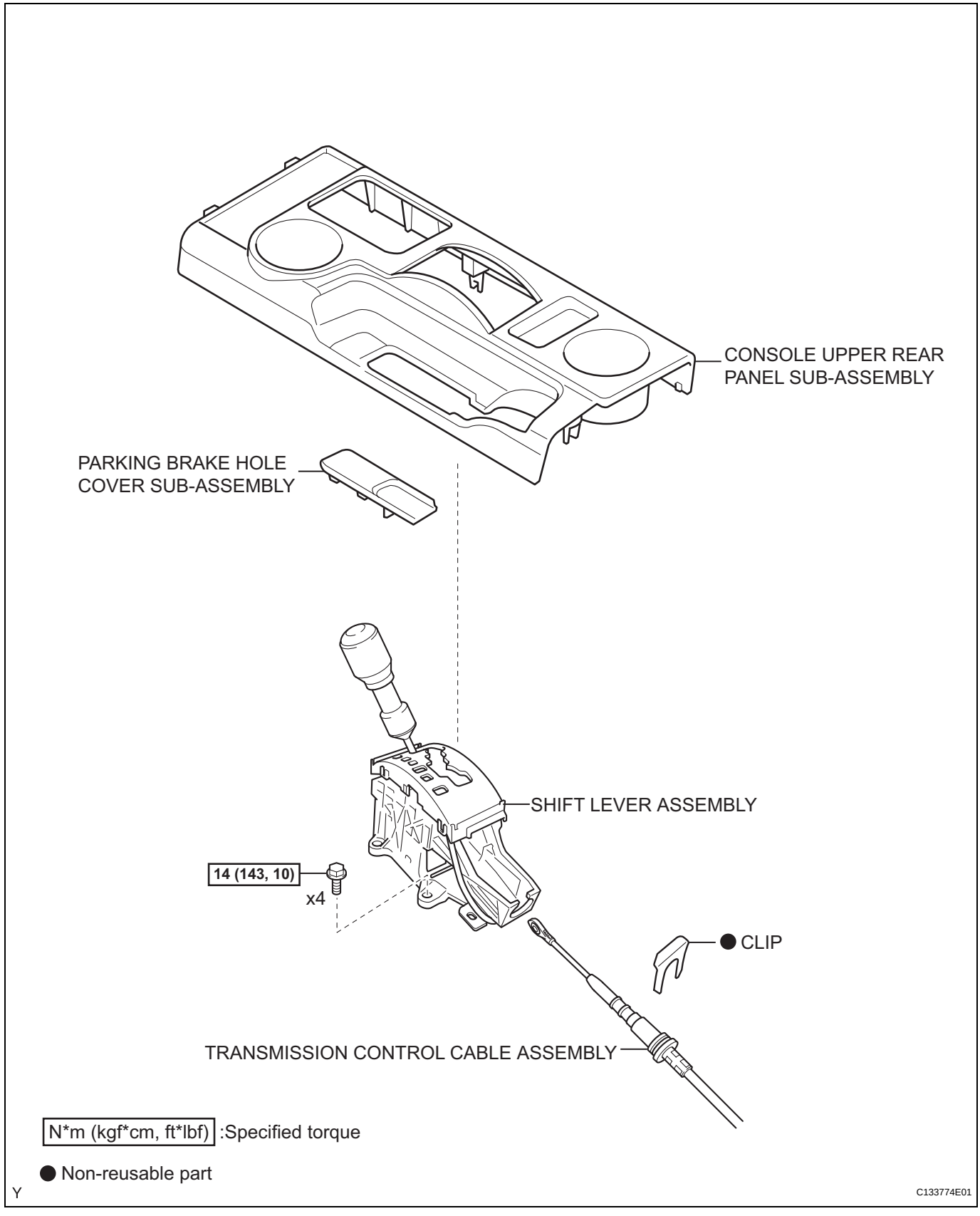

AT

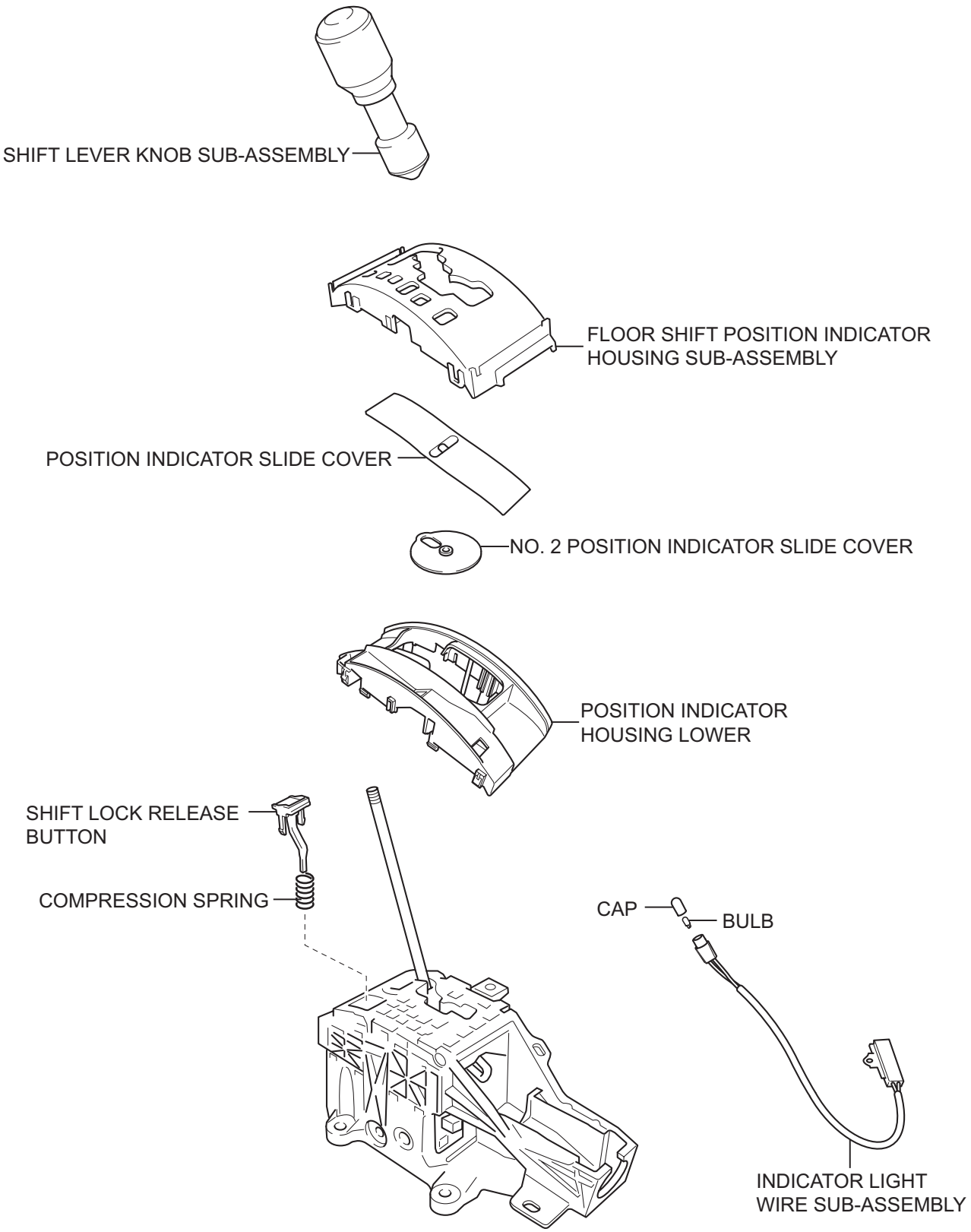

AT

Y

C133773E01

REMOVAL

1. **REMOVE PARKING BRAKE HOLE COVER SUB-ASSEMBLY (See page IP-11)**
2. **REMOVE CONSOLE UPPER REAR PANEL SUB-ASSEMBLY (See page IP-12)**
3. **DISCONNECT TRANSMISSION CONTROL CABLE ASSEMBLY**
   (a) Remove the lock clip and disconnect the control cable from the shift lever.

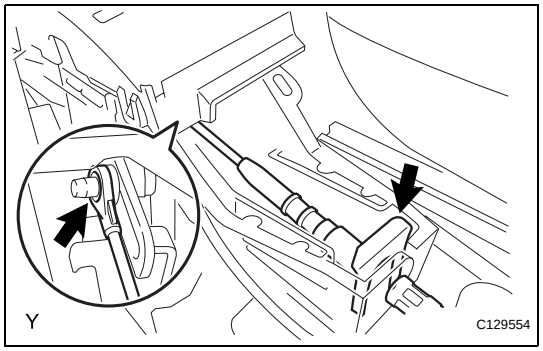

4. **REMOVE SHIFT LEVER ASSEMBLY**
   (a) Disconnect the shift lock control computer connector.
   (b) Disconnect the indicator light connector.
   (c) Remove the 4 bolts and the shift lever assembly.

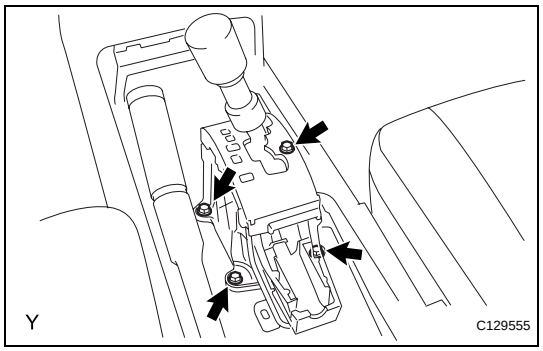

AT

DISASSEMBLY

1. **REMOVE SHIFT LEVER KNOB SUB-ASSEMBLY**
2. **REMOVE FLOOR SHIFT POSITION INDICATOR HOUSING SUB-ASSEMBLY**
   (a) Disengage the 4 claws and remove the position indicator housing from the shift lever assembly.
3. **REMOVE POSITION INDICATOR SLIDE COVER**
4. **REMOVE NO. 2 POSITION INDICATOR SLIDE COVER**

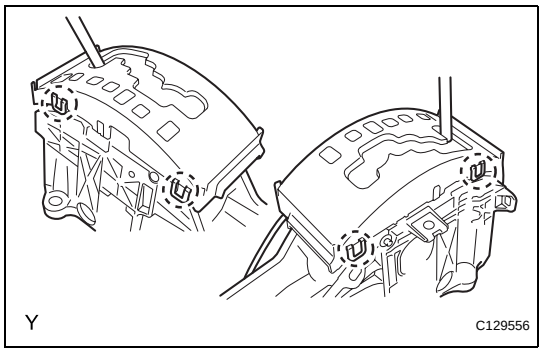

5. **REMOVE POSITION INDICATOR HOUSING LOWER**
   (a) Disengage the 4 claws and remove the position indicator housing lower from the shift lever assembly.

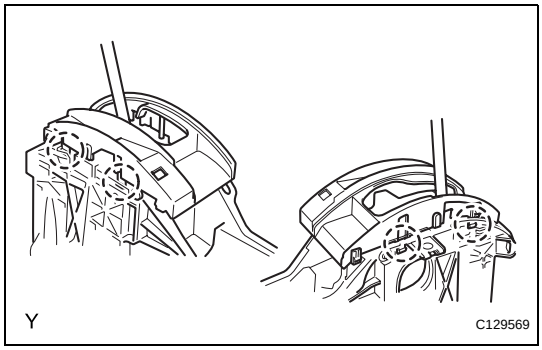

   (b) Disconnect the indicator light wire from the position indicator housing lower.

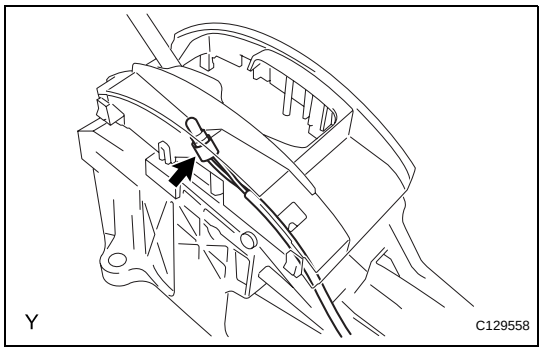

6. **REMOVE SHIFT LOCK RELEASE BUTTON**
   (a) Remove the shift lock release button and compression spring from the shift lever assembly.

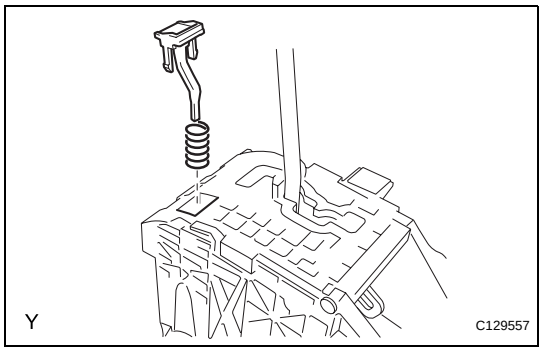

AT

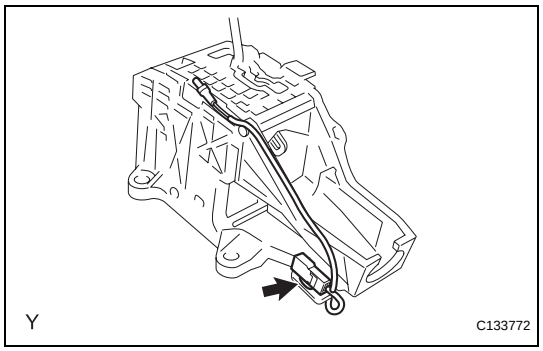

7. REMOVE INDICATOR LIGHT WIRE SUB-ASSEMBLY

(a) Disconnect the indicator light wire from the shift lever assembly.

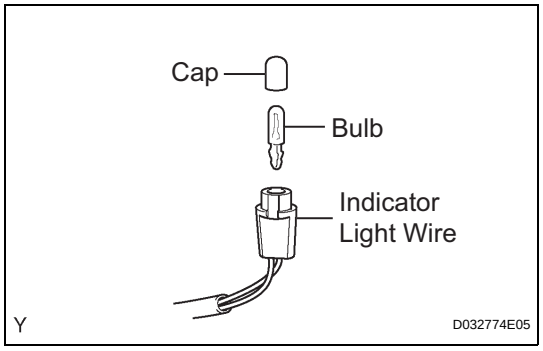

(b) Remove the bulb and cap from the indicator light wire.

ADJUSTMENT

1. INSPECT SHIFT LEVER POSITION

(a) Check that the shift lever moves smoothly and appropriately from the P to the R position, only when the ignition switch is turned to ON and the brake pedal is depressed.

(b) When starting the engine, make sure that the vehicle moves forward when shifting the lever from the N to the D position and moves rearward when shifting the lever to the R position.

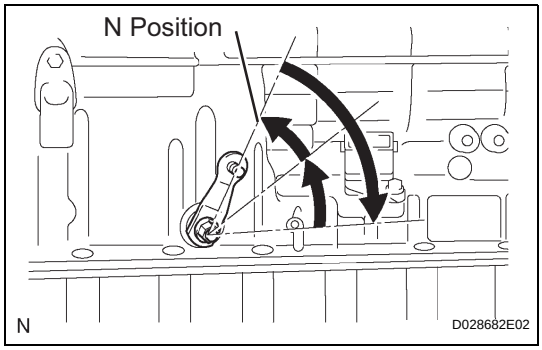

2. ADJUST SHIFT LEVER POSITION

(a) Push the control shaft fully rearward.

(b) Turn the control shaft lever 2 notches counterclockwise to the N position.

(c) Set the shift lever to the N position.

REASSEMBLY

1. INSTALL INDICATOR LIGHT WIRE SUB-ASSEMBLY

(a) Install the bulb and cap onto the indicator light wire.

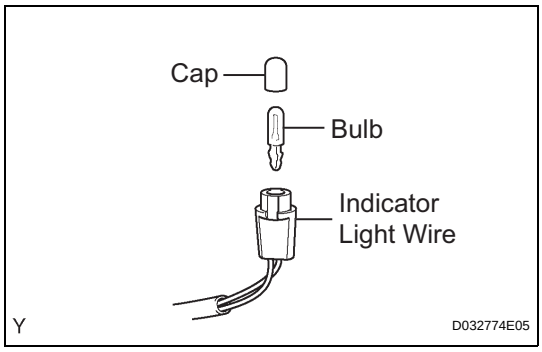

AT

(b) Connect the indicator light wire connector onto the shift lever assembly.

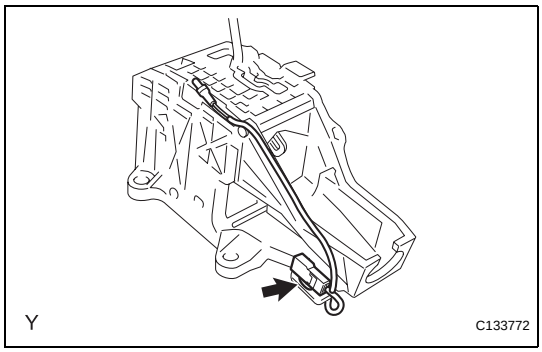

2. INSTALL SHIFT LOCK RELEASE BUTTON

(a) Apply MP grease to the shift lock release button and spring.

(b) Install the shift lock release button and spring onto the shift lever.

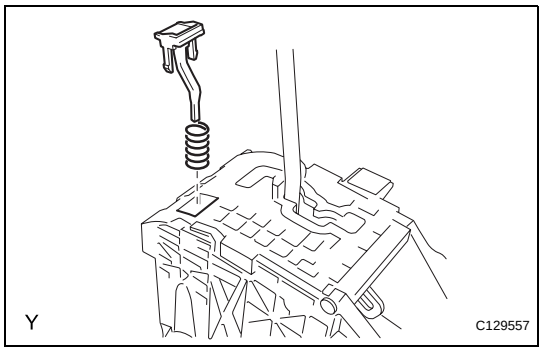

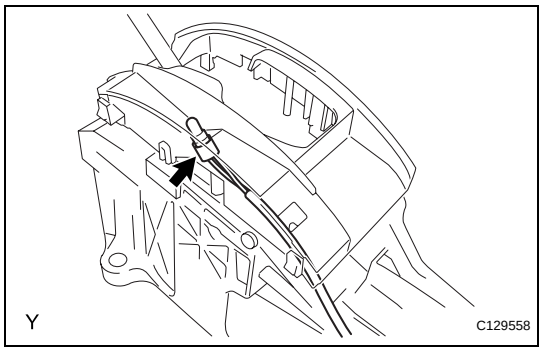

3. **INSTALL POSITION INDICATOR HOUSING LOWER**
   (a) Connect the indicator light wire connector onto the position indicator housing lower.

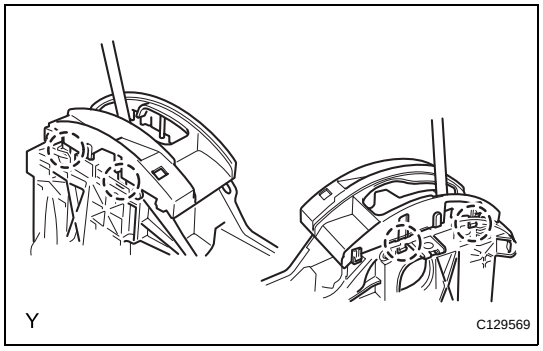

   (b) Engage the 4 claws to install the position indicator housing lower.

4. **INSTALL NO. 2 POSITION INDICATOR SLIDE COVER**

5. **INSTALL POSITION INDICATOR SLIDE COVER**

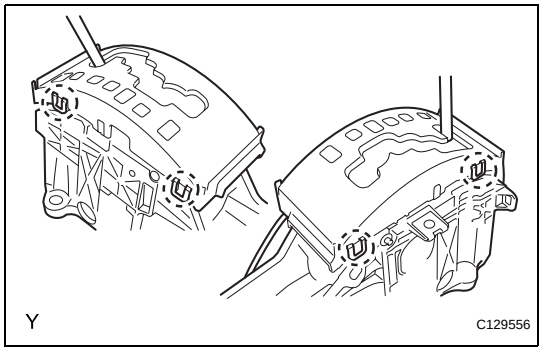

6. **INSTALL FLOOR SHIFT POSITION INDICATOR HOUSING SUB-ASSEMBLY**
   (a) Engage the 4 claws to install the position indicator housing.

7. **INSTALL SHIFT LEVER KNOB SUB-ASSEMBLY**

INSTALLATION

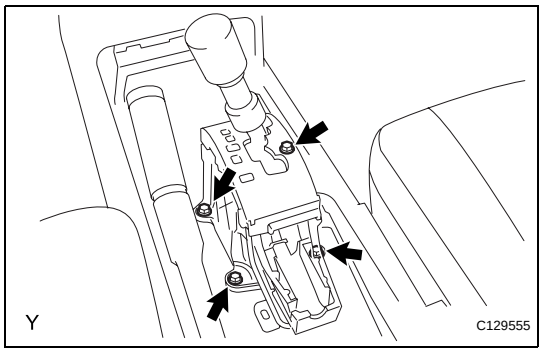

1. **INSTALL SHIFT LEVER ASSEMBLY**
   (a) Install the shift lever with the 4 bolts.
   Torque: 14 N*m (143 kgf*cm, 10 ft.*lbf)
   (b) Connect the indicator light connector.
   (c) Connect the shift lock control computer connector.

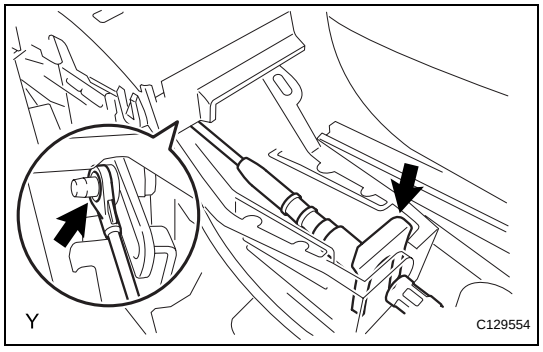

2. **CONNECT TRANSMISSION CONTROL CABLE ASSEMBLY**
   (a) Connect the control cable with the lock clip.

3. **INSTALL CONSOLE UPPER REAR PANEL SUB-ASSEMBLY (See page IP-31)**

4. **INSTALL PARKING BRAKE HOLE COVER SUB-ASSEMBLY (See page IP-32)**

5. **INSPECT SHIFT LEVER POSITION (See page AT-166)**

6. **ADJUST SHIFT LEVER POSITION (See page AT-167)**

AUTOMATIC TRANSMISSION ASSEMBLY

COMPONENTS

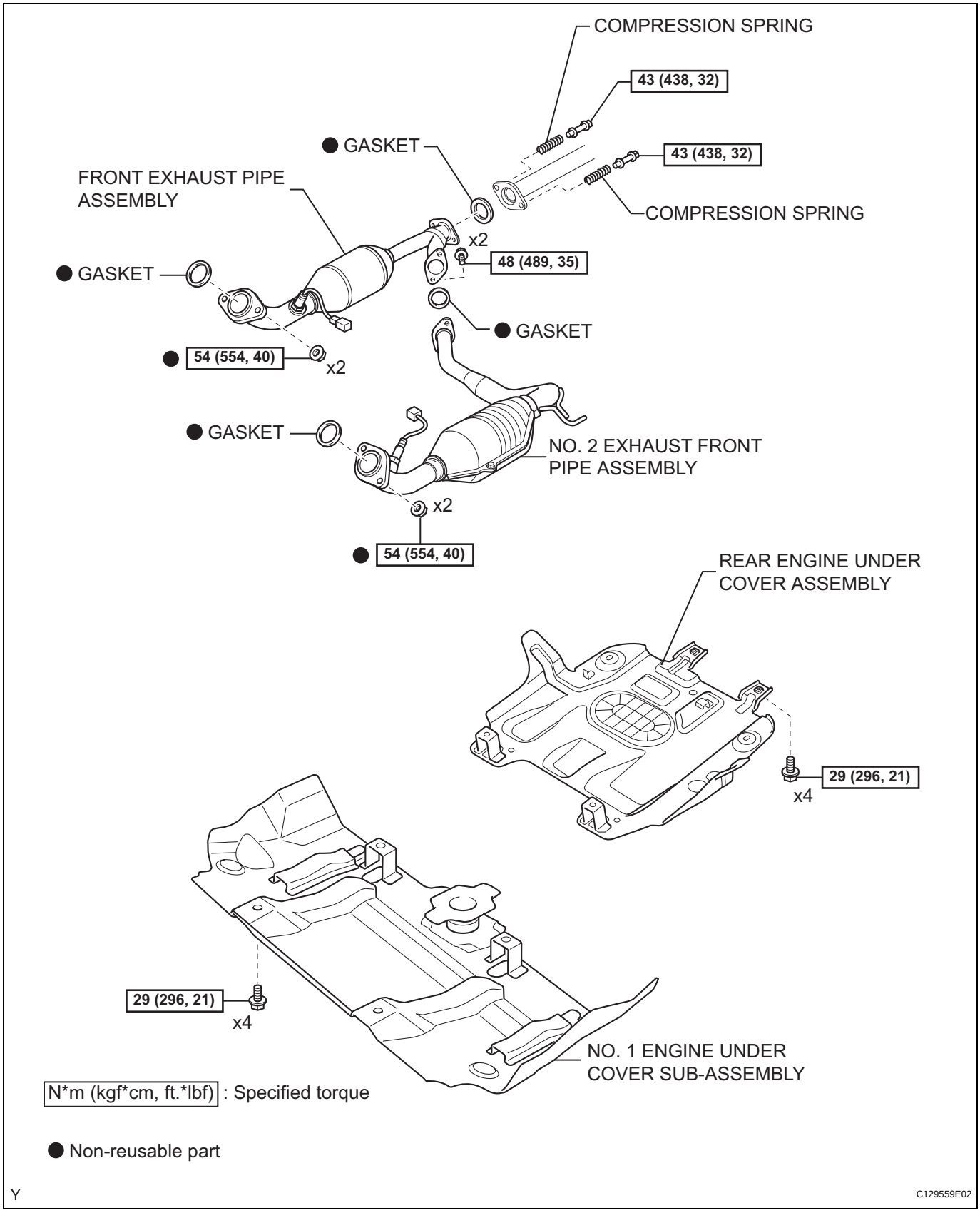

AT

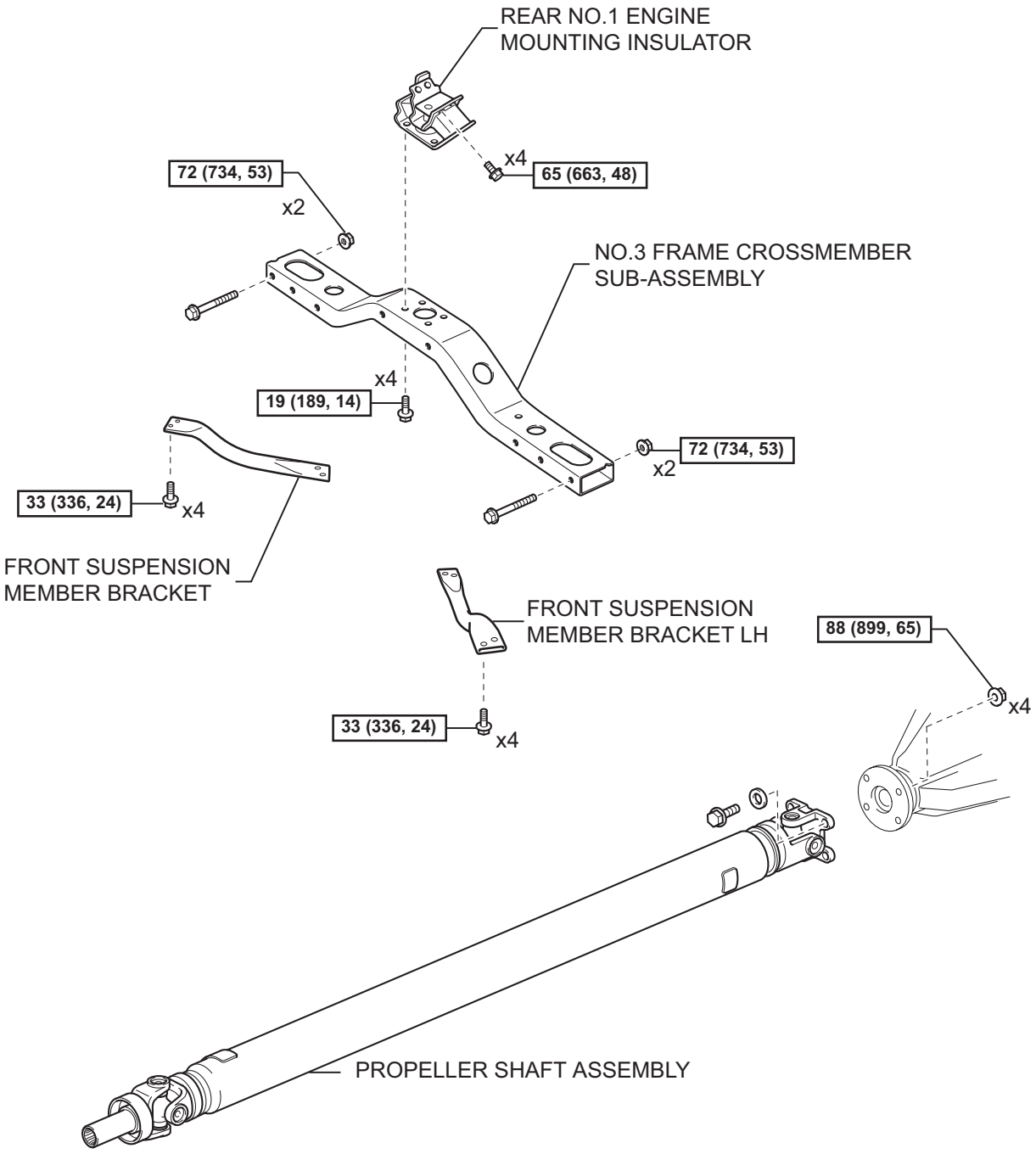

AT

N*m (kgf*cm, ft.*lbf) : Specified torque

Y

C129560E01

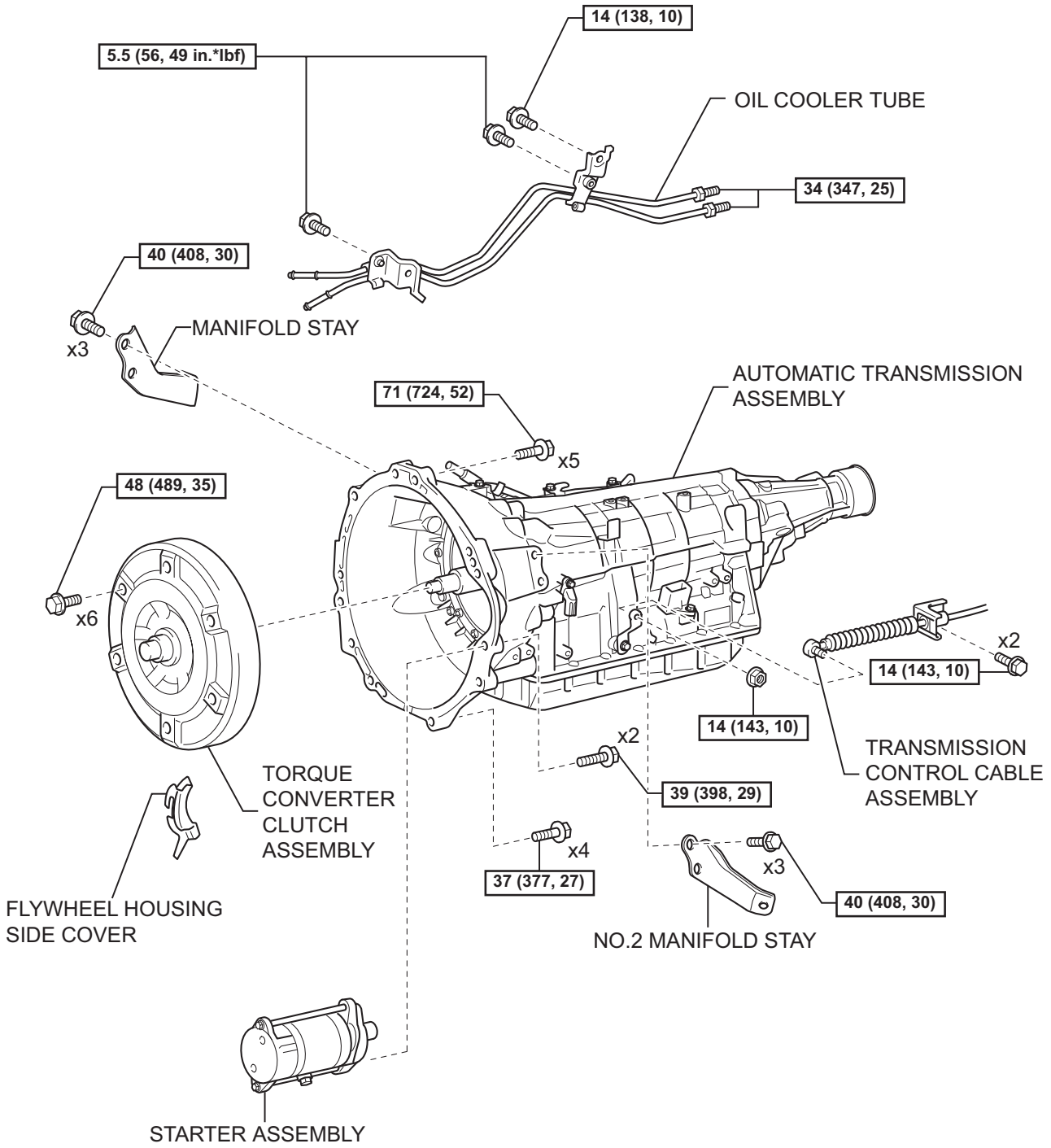

N*m (kgf*cm, ft.*lbf) : Specified torque

Y

C129561E01

AT

REMOVAL

1. **DISCONNECT CABLE FROM NEGATIVE BATTERY TERMINAL**
2. **REMOVE NO. 1 ENGINE UNDER COVER SUB-ASSEMBLY**
3. **REMOVE REAR ENGINE UNDER COVER ASSEMBLY**
4. **DISCONNECT OXYGEN SENSOR**
5. **REMOVE NO. 2 EXHAUST FRONT PIPE ASSEMBLY (See page EX-4)**
6. **REMOVE FRONT EXHAUST PIPE ASSEMBLY (See page EX-4)**
7. **REMOVE PROPELLER SHAFT ASSEMBLY (See page PR-9)**
8. **DRAIN AUTOMATIC TRANSMISSION FLUID**
   (a) Remove the drain plug and gasket, and drain ATF.
   (b) Install a new gasket and drain plug.
   Torque: 28 N*m (285 kgf*cm, 21 ft.*lbf)
9. **REMOVE MANIFOLD STAY**
   (a) Remove the 3 bolts and manifold stay.

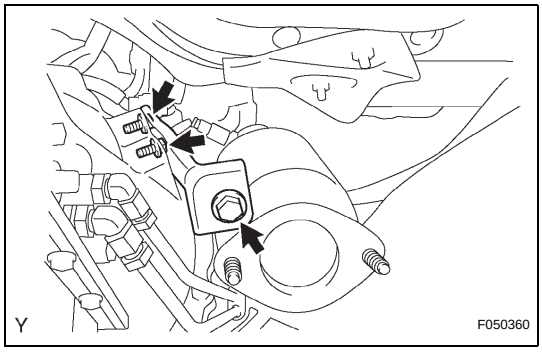

AT

10. **REMOVE NO.2 MANIFOLD STAY**
    (a) Remove the 3 bolts and No. 2 manifold stay.

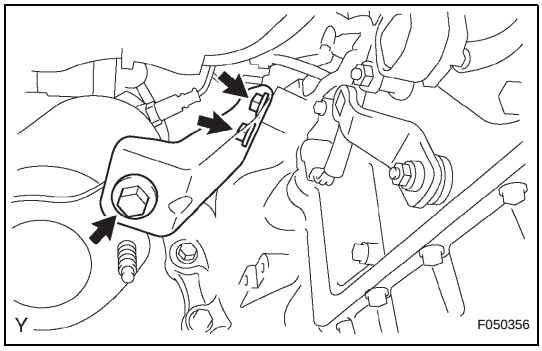

11. **DISCONNECT OIL COOLER TUBE**
    (a) Remove the 3 bolts and 2 clamps.

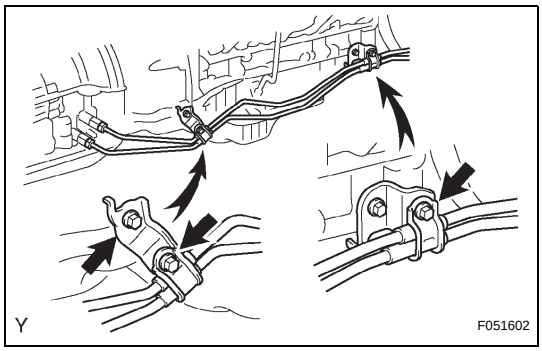

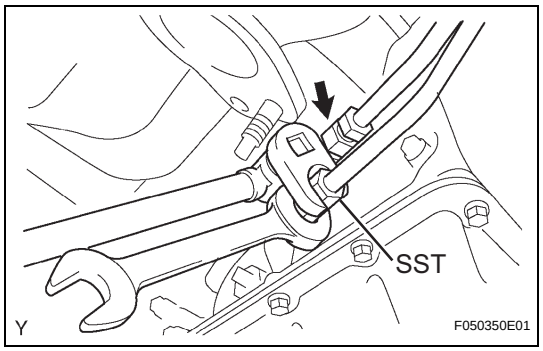

(b) Using SST, disconnect the No. 1 oil cooler inlet tube.
SST 09023-12701
(c) Using SST, disconnect the No. 1 oil cooler outlet tube.
SST 09023-12701

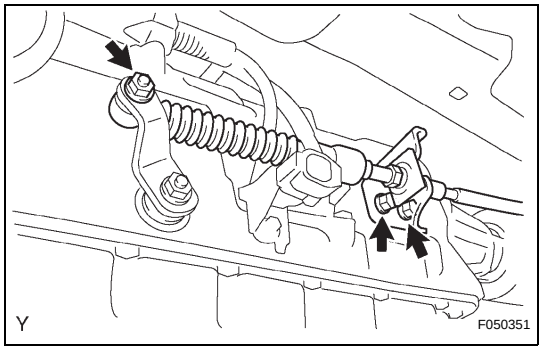

12. DISCONNECT TRANSMISSION CONTROL CABLE ASSEMBLY
(a) Remove the nut and disconnect the transmission control cable.
(b) Remove the 2 bolts and disconnect the transmission control cable.

13. DISCONNECT CONNECTOR
(a) Disconnect the park/neutral position switch connector.
(b) Disconnect the transmission wire connector.
(c) Disconnect the 2 speed sensor connectors.

14. DISCONNECT WIRE HARNESS

15. REMOVE STARTER ASSEMBLY (See page ST-7)

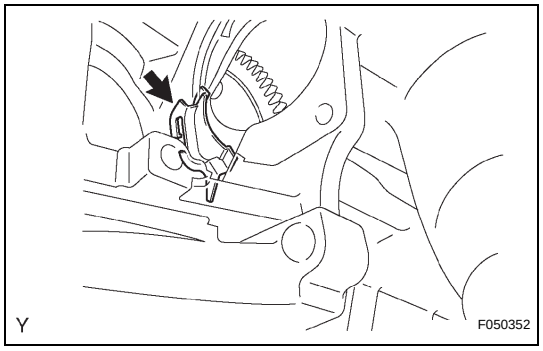

16. REMOVE FLYWHEEL HOUSING SIDE COVER
(a) Remove the flywheel housing side cover from the cylinder block.

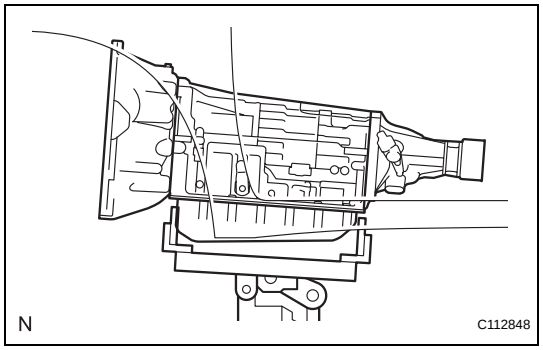

17. SUPPORT AUTOMATIC TRANSMISSION ASSEMBLY
(a) Support the automatic transmission assembly with a transmission jack.

AT

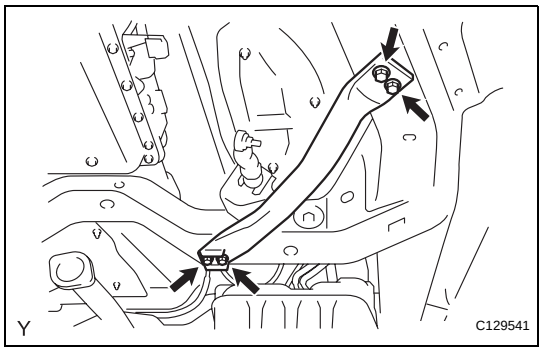

18. REMOVE FRONT SUSPENSION MEMBER BRACKET LH

(a) Remove the 4 bolts and front suspension member bracket LH.

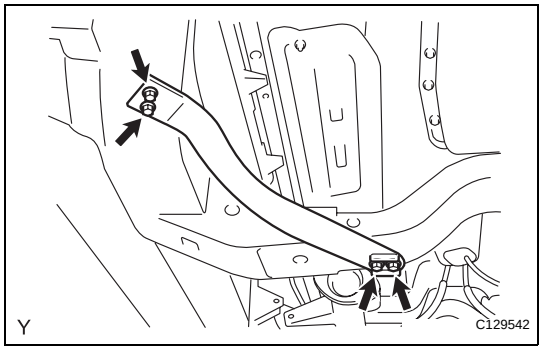

19. REMOVE FRONT SUSPENSION MEMBER BRACKET

(a) Remove the 4 bolts and front suspension member bracket RH.

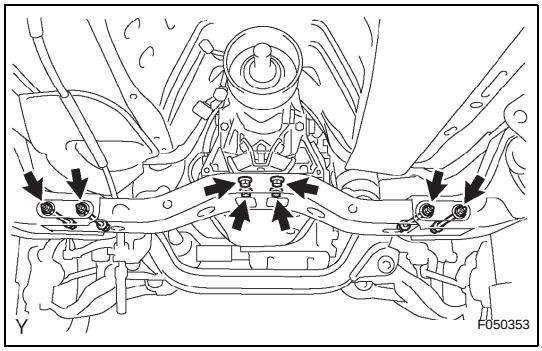

20. REMOVE NO.3 FRAME CROSSMEMBER SUB-ASSEMBLY

(a) Remove the 4 bolts on the No. 3 frame crossmember sub-assembly.

(b) Remove the 4 nuts, 4 bolts and No. 3 frame crossmember sub-assembly.

AT

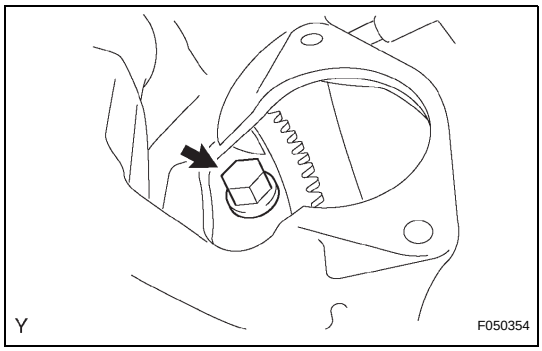

21. REMOVE AUTOMATIC TRANSMISSION ASSEMBLY

(a) Turn the crankshaft to gain access to each bolt.

(b) Hold the crankshaft pulley nut with a wrench and remove the 6 bolts.

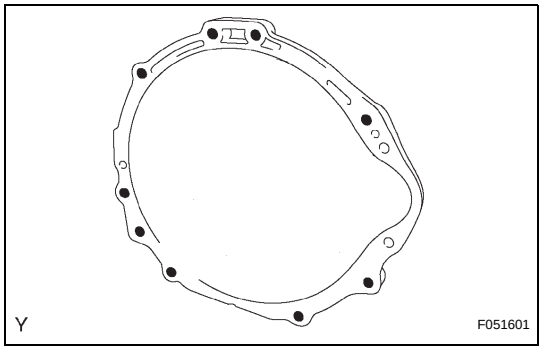

(c) Remove the 9 bolts.

(d) Separate and remove the automatic transmission.

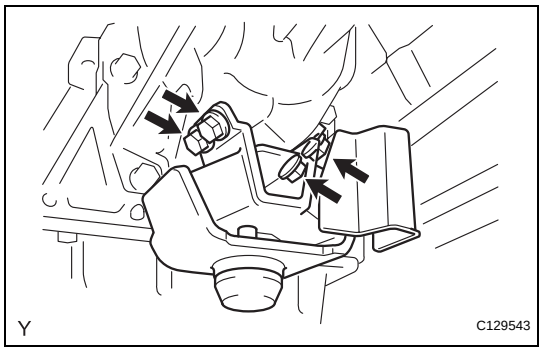

22. REMOVE REAR NO.1 ENGINE MOUNTING INSULATOR

(a) Remove the 4 bolts and engine mounting insulator rear from the automatic transmission.

23. REMOVE TORQUE CONVERTER CLUTCH ASSEMBLY

INSTALLATION

1. INSPECT TORQUE CONVERTER CLUTCH ASSEMBLY (See page AT-179)

2. INSTALL TORQUE CONVERTER CLUTCH ASSEMBLY

(a) Install the torque converter clutch onto the automatic transmission.

(b) Using calipers and a straight edge, measure dimension A, between the engine and the end surface of the drive plate, as shown in the illustration.

Standard:

A = 21.2 mm (0.835 in.)

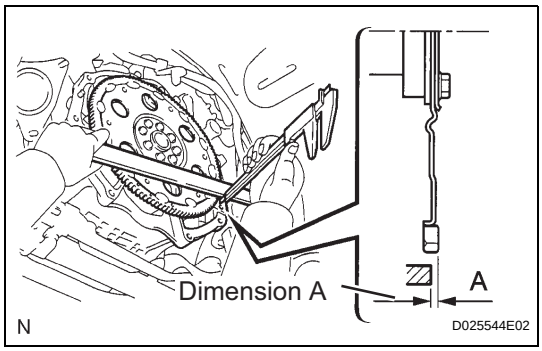

(c) Using calipers and a straight edge, measure dimension B shown in the illustration. Check that B is greater than A.

Standard:

B = A + 1.0 mm (0.0394 in.) or more

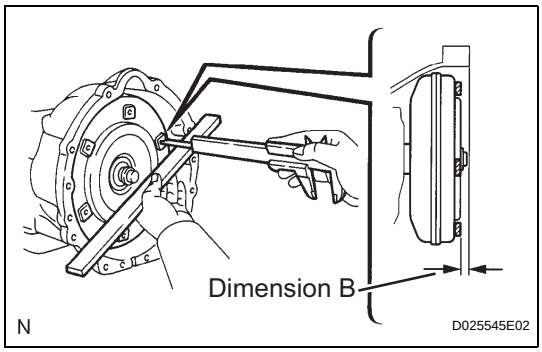

3. INSTALL REAR NO.1 ENGINE MOUNTING INSULATOR

(a) Install the engine mounting insulator rear onto the automatic transmission with the 4 bolts.

Torque: 65 N*m (663 kgf*cm, 48 ft.*lbf)

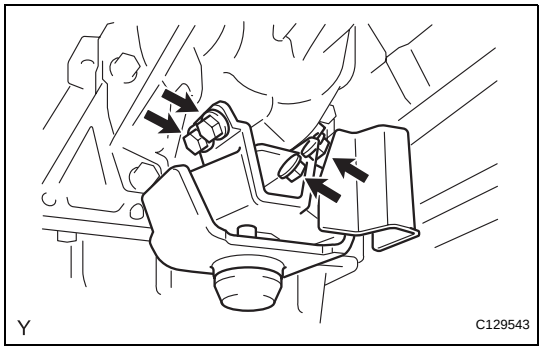

4. INSTALL AUTOMATIC TRANSMISSION ASSEMBLY

(a) Install the automatic transmission onto the engine with the 9 bolts.

Torque: 71 N*m (720 kgf*cm, 53 ft.*lbf) for bolt A
37 N*m (380 kgf*cm, 27 ft.*lbf) for bolt B

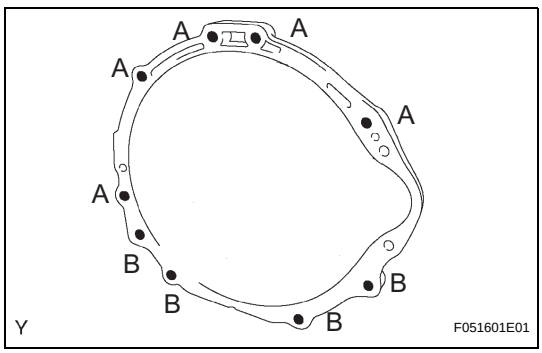

AT

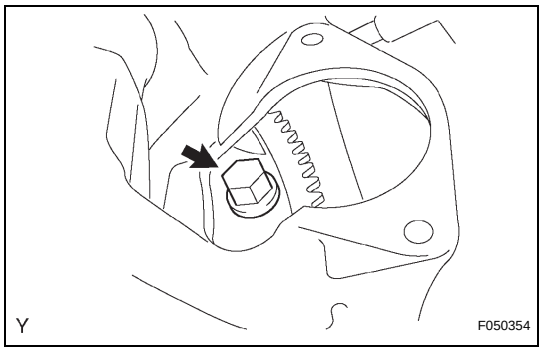

(b) Install the 6 torque converter clutch mounting bolts.
Torque: 48 N*m (489 kgf*cm, 35 ft.*lbf)
HINT:
First install the black bolt and then the other 5 bolts.

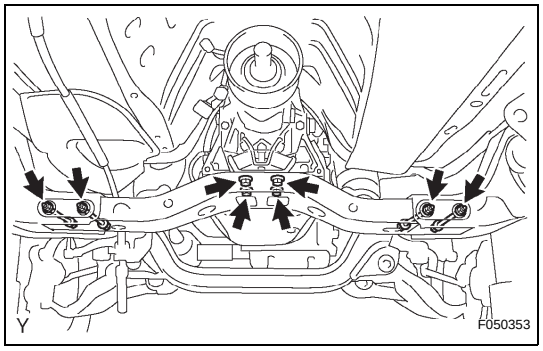

5. INSTALL NO.3 FRAME CROSSMEMBER SUB-ASSEMBLY

(a) Install the No. 3 frame crossmember sub-assembly with the 4 bolts and 4 nuts.
Torque: 72 N*m (734 kgf*cm, 53 ft.*lbf)

(b) Install the No. 3 frame crossmember sub-assembly with the 4 bolts.
Torque: 19 N*m (189 kgf*cm, 14 ft.*lbf)

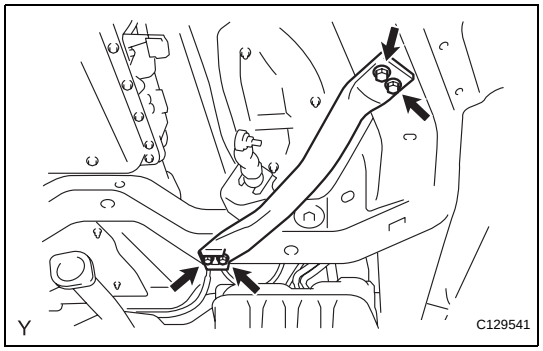

6. INSTALL FRONT SUSPENSION MEMBER BRACKET LH

(a) Install the front suspension member bracket LH with the 4 bolts.
Torque: 33 N*m (336 kgf*cm, 24 ft.*lbf)

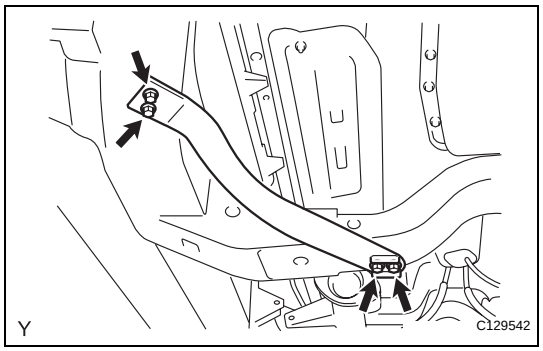

7. INSTALL FRONT SUSPENSION MEMBER BRACKET

(a) Install the front suspension member bracket RH with the 4 bolts.
Torque: 33 N*m (336 kgf*cm, 24 ft.*lbf)

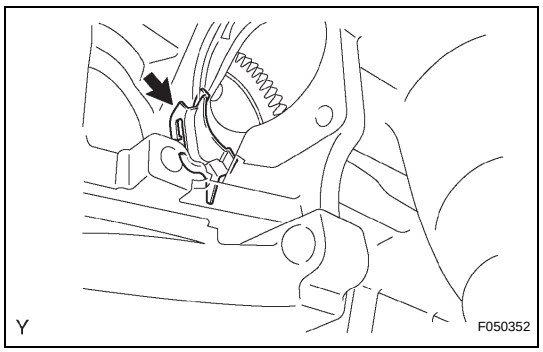

8. INSTALL FLYWHEEL HOUSING SIDE COVER

(a) Install the flywheel housing side cover onto the cylinder block.

9. INSTALL STARTER ASSEMBLY (See page ST-15)

10. CONNECT WIRE HARNESS

11. CONNECT CONNECTOR

(a) Connect the park/neutral position switch connector.
(b) Connect the transmission wire connector.
(c) Connect the 2 speed senor connectors.

AT

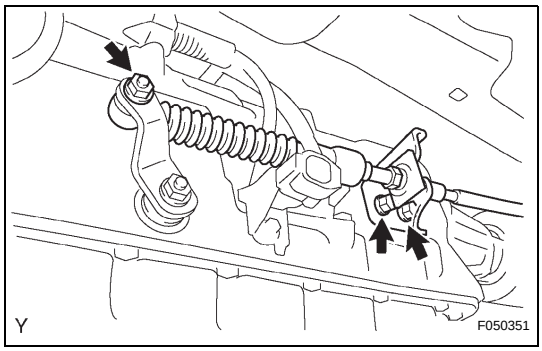

12. INSTALL TRANSMISSION CONTROL CABLE ASSEMBLY

(a) Install the transmission control cable bracket with the 2 bolts.
Torque: 14 N*m (143 kgf*cm, 10 ft.*lbf)

(b) Connect the transmission control cable with the nut.
Torque: 14 N*m (143 kgf*cm, 10 ft.*lbf)

13. INSTALL OIL COOLER TUBE

(a) Provisionally install the No. 1 oil cooler outlet tube.

(b) Provisionally install the No. 1 oil cooler inlet tube.

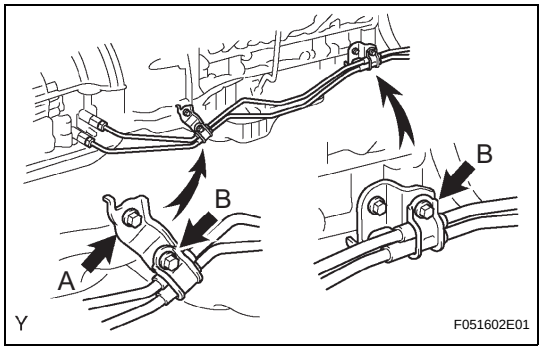

(c) Install the 2 clamps and 3 bolts.
Torque: 14 N*m (138 kgf*cm, 10 ft.*lbf) for bolt A
5.5 N*m (56 kgf*cm, 49 in.*lbf) for bolt B

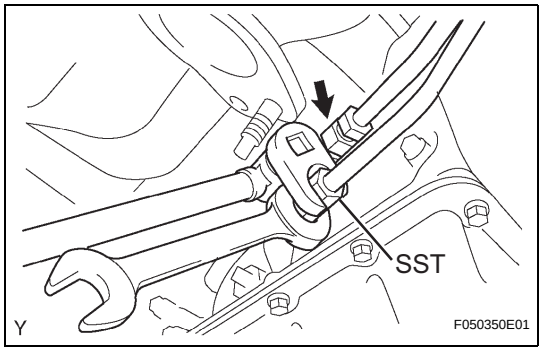

(d) Using SST, tighten the No. 1 oil cooler outlet tube.
SST 09023-12701
Torque: 34 N*m (350 kgf*cm, 25 ft.*lbf) for use without SST
30 N*m (306 kgf*cm, 22 ft.*lbf) for use with SST
HINT:
- Use a torque wrench with a fulcrum length of 300 mm (11.81 in.).
- This torque value is effective when SST is parallel to the torque wrench.

(e) Using SST, tighten the No. 1 oil cooler inlet tube.
SST 09023-12701
Torque: 34 N*m (350 kgf*cm, 25 ft.*lbf) for use without SST
30 N*m (306 kgf*cm, 22 ft.*lbf) for use with SST
HINT:
- Use a torque wrench with a fulcrum length of 300 mm (11.81 in.).
- This torque value is effective when SST is parallel to the torque wrench.

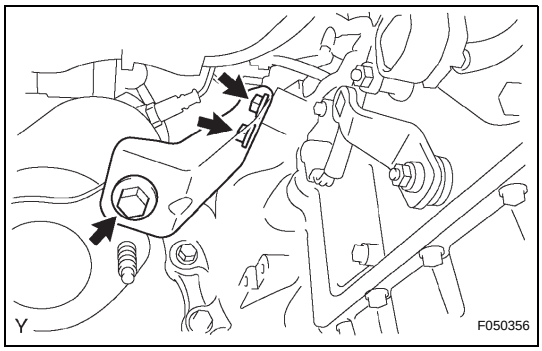

14. INSTALL NO.2 MANIFOLD STAY

(a) Install the No. 2 manifold stay with the 3 bolts.
Torque: 40 N*m (408 kgf*cm, 30 ft.*lbf)

AT

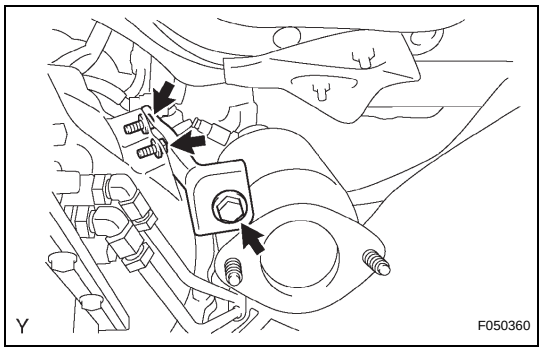

15. **INSTALL MANIFOLD STAY**
    (a) Install the manifold stay with the 3 bolts.
    Torque: 40 N*m (408 kgf*cm, 30 ft.*lbf)
16. **INSTALL PROPELLER SHAFT ASSEMBLY (See page PR-14)**
17. **INSTALL FRONT EXHAUST PIPE ASSEMBLY (See page EX-4)**
18. **INSTALL NO. 2 EXHAUST FRONT PIPE ASSEMBLY (See page EX-5)**
19. **INSTALL OXYGEN SENSOR**
20. **CONNECT CABLE TO NEGATIVE BATTERY TERMINAL**
    Torque: 3.9 N*m (40 kgf*cm, 35 in.*lbf)
21. **PERFORM INITIALIZATION**
    (See page AT-19)
22. **ADJUST AUTOMATIC TRANSMISSION FLUID**
    (See page AT-140)
23. **INSPECT SHIFT LEVER POSITION (See page AT-166)**
24. **ADJUST SHIFT LEVER POSITION (See page AT-167)**
25. **CHECK FOR EXHAUST GAS LEAKAGE**
26. **INSTALL REAR ENGINE UNDER COVER ASSEMBLY**
27. **INSTALL NO. 1 ENGINE UNDER COVER SUB-ASSEMBLY**

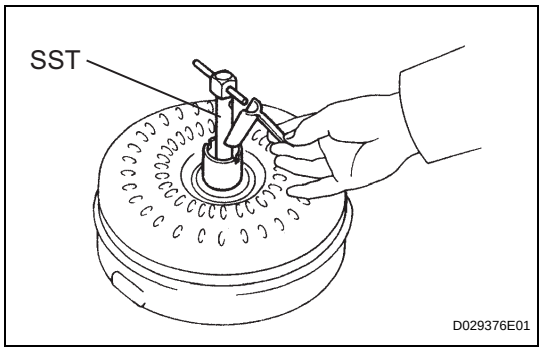

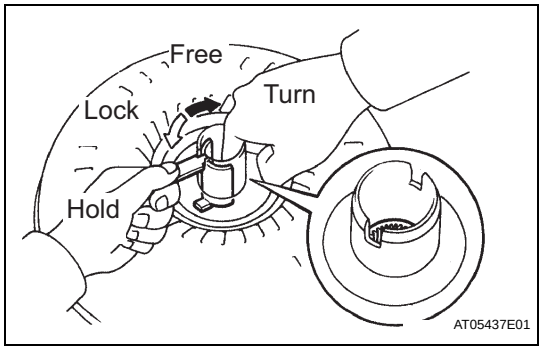

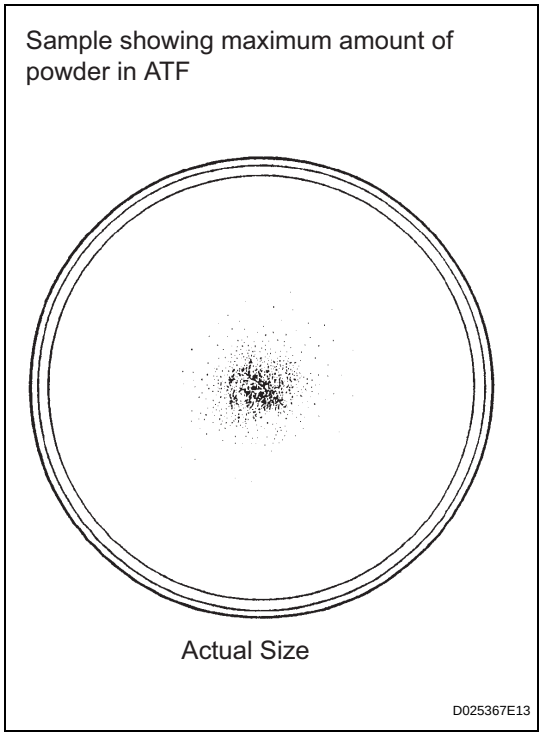

TORQUE CONVERTER CLUTCH AND DRIVE PLATE

INSPECTION

1. INSPECT TORQUE CONVERTER CLUTCH ASSEMBLY

(a) Inspect the one-way clutch.

(1) Install SST in the inner race of the one-way clutch.
SST 09350-32014 (09351-32020)

(2) Press on the serrations of the starter with a finger and rotate it.
Check if it rotates smoothly when turned clockwise and locks when turned counterclockwise.
If the results are not as specified, clean the converter and recheck the one-way clutch. If the results still are not as specified, replace the converter.

(b) Determine the condition of the torque converter clutch.

(1) Check that the following conditions are met:
- During the stall test or when the shift lever is in N, metallic sounds are not emitted from the torque converter clutch.
- The one-way clutch turns in one direction and locks in the other direction.
- The amount of powder in the ATF is not greater than the sample shown in the illustration.

If the results are not as specified, replace the torque converter clutch assembly.
HINT:
The sample illustration shows approximately 0.25 liters (0.26 US qts, 0.22 Imp. qts) of the ATF taken from a removed torque converter clutch.

(c) Replace the ATF in the torque converter clutch.

(1) If the ATF is discolored and/or has a foul odor, stir the ATF in the torque converter clutch thoroughly and drain the ATF with the torque converter facing up.

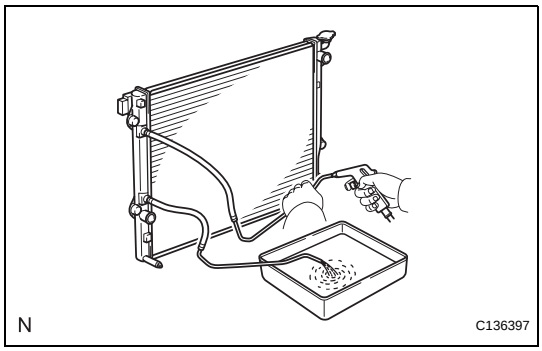

(d) Clean and check the oil cooler and oil pipe line.
(1) If the torque converter clutch is inspected or the ATF is replaced, clean the oil cooler and oil pipe line.
HINT:
- Apply compressed air of 196 kPa (2 kgf/cm^2, 28 psi) into the inlet hose.
- If a large amount of powder is found in the ATF, add new ATF using a bucket pump and clean the oil cooler and oil pipe line again.

(2) If the ATF is cloudy, inspect the oil cooler (radiator).

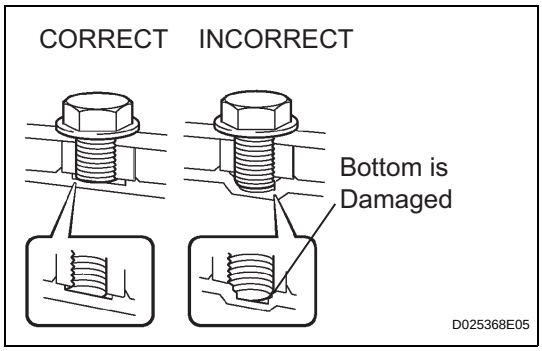

(e) Prevent deformation of the torque converter clutch and damage to the oil pump gear.
(1) When any marks due to interference are found on the end of the bolt for the torque converter clutch and on the bottom of the bolt hole, replace the bolt and torque converter clutch.
(2) All of the bolts should be the same length.
(3) Make sure no spring washers are missing.

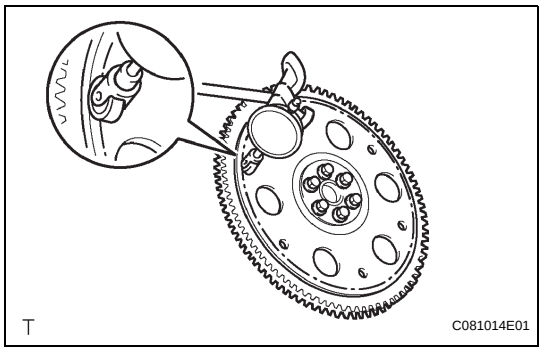

2. INSPECT RUNOUT OF DRIVE PLATE AND RING GEAR

(a) Set up a dial indicator and measure the drive plate runout.
Maximum runout:
0.20 mm (0.0079 in.)
If the runout is greater than the maximum or if the ring gear is damaged, replace the drive plate. If installing a new drive plate, note the orientation of the spacers and tighten the bolts.
Torque: 83 N*m (846 kgf*cm, 61 ft.*lbf)

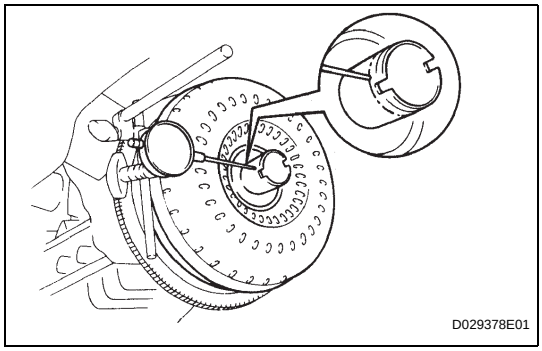

3. INSPECT RUNOUT OF TORQUE CONVERTER CLUTCH ASSEMBLY

(a) Temporarily mount the torque converter clutch to the drive plate. Set up a dial indicator.
Maximum runout:
0.30mm (0.0118 in.)
If the runout is greater than the maximum, try to correct it by changing the installation direction of the torque converter clutch.
If the runout cannot be corrected, replace the torque converter clutch.
HINT:
Mark the position of the torque converter clutch so that it can be installed correctly later.

(b) Remove the torque converter clutch.

AT

TRANSMISSION CONTROL CABLE

COMPONENTS

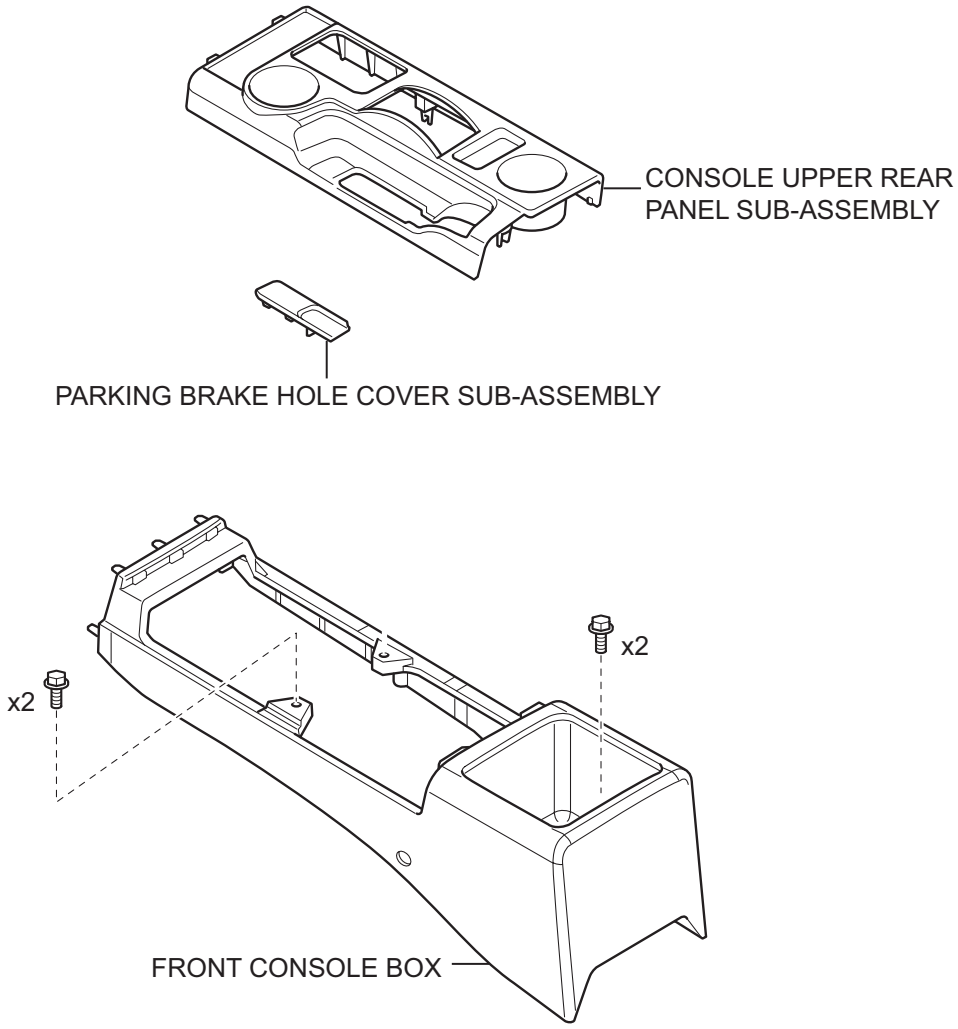

AT

Y

C135796E01

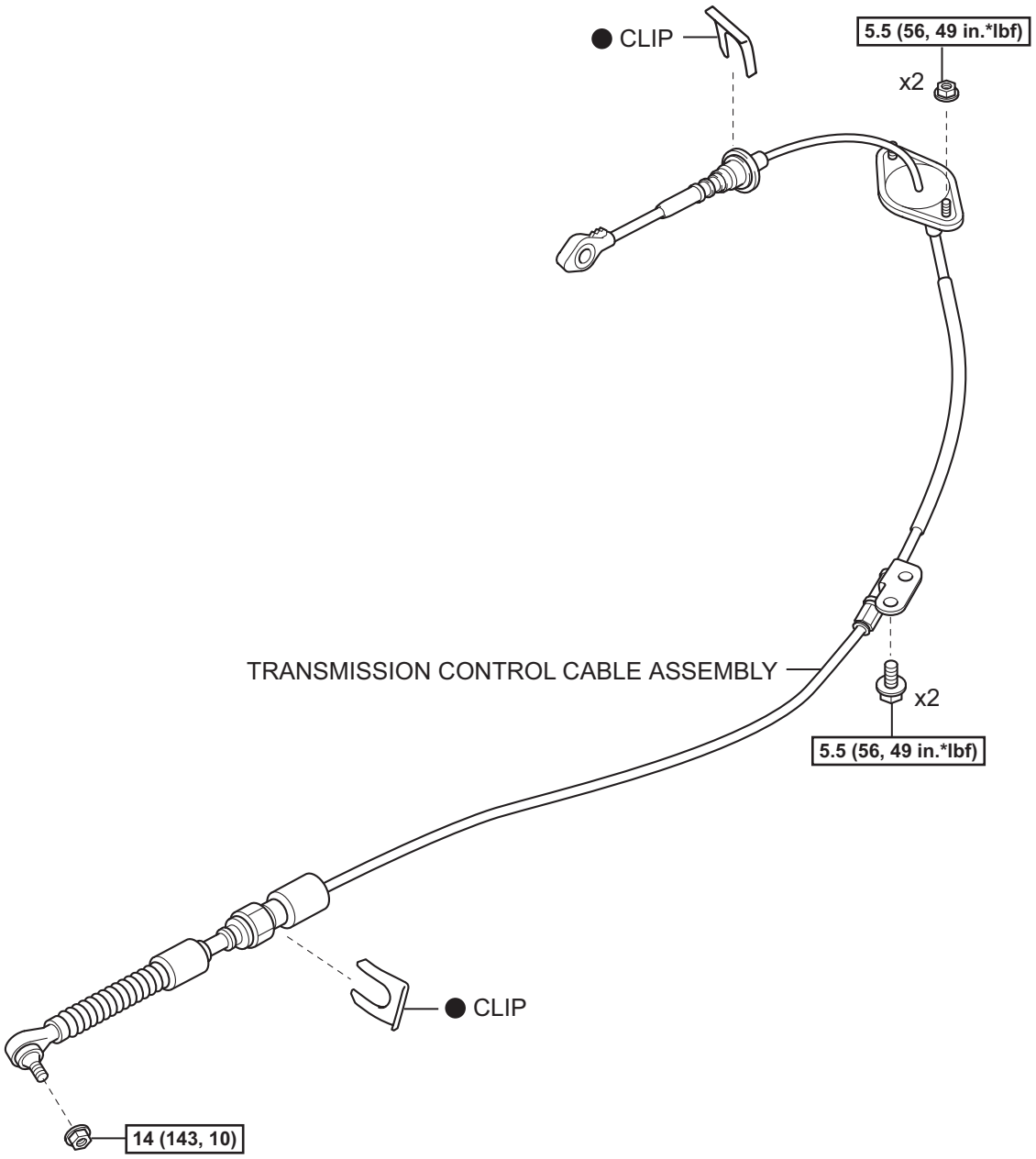

N*m (kgf*cm, ft*lbf) :Specified torque

● Non-reusable part

Y

C133775E01

AT

REMOVAL

1. **REMOVE PARKING BRAKE HOLE COVER SUB-ASSEMBLY (See page IP-11)**
2. **REMOVE CONSOLE UPPER REAR PANEL SUB-ASSEMBLY (See page IP-12)**
3. **REMOVE FRONT CONSOLE BOX (See page IP-12)**
4. **REMOVE TRANSMISSION CONTROL CABLE ASSEMBLY**

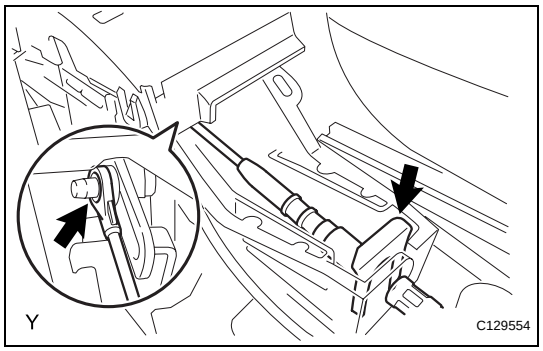

(a) Remove the lock clip and disconnect the control cable from the shift lever.

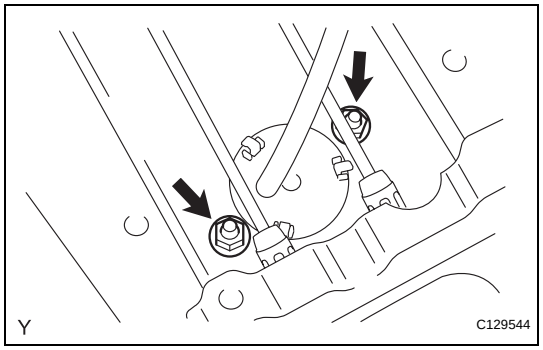

(b) Remove the 2 nuts and disconnect the control cable from the vehicle body.

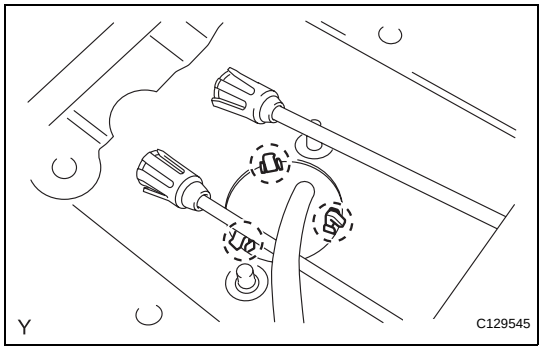

(c) Disengage the 3 claws and disconnect the control cable.

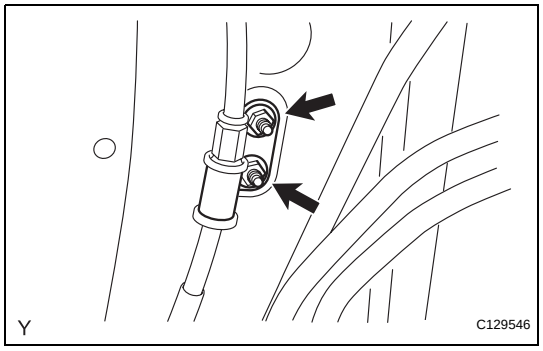

(d) Remove the 2 nuts and disconnect the control cable from the vehicle body.

AT

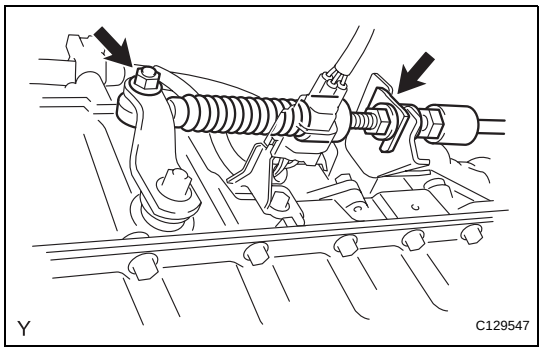

(e) Remove the nut and clip then disconnect the control cable.

INSTALLATION

1. INSTALL TRANSMISSION CONTROL CABLE ASSEMBLY

(a) Connect the control cable to the transmission with the nut and a new clip.
Torque: 14 N*m (143 kgf*cm, 10 ft.*lbf)

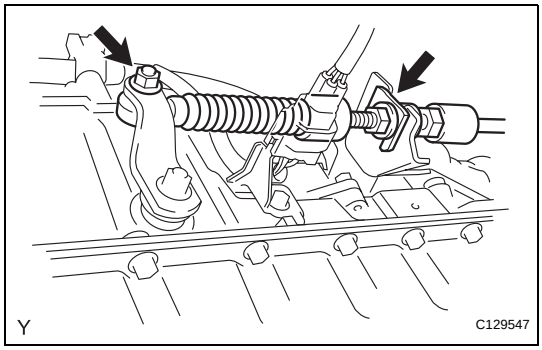

(b) Connect the control cable to the body with the 2 nuts.
Torque: 5.5 N*m (56 kgf*cm, 49 in.*lbf)

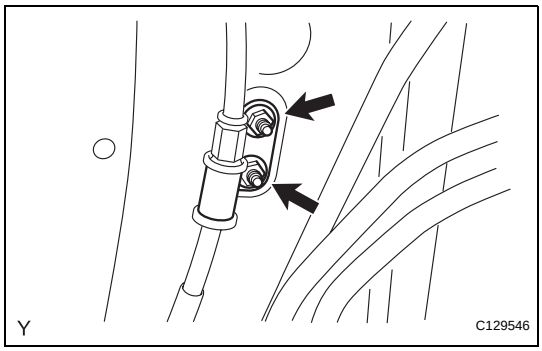

AT

(c) Engage the 3 claws to connect the control cable.

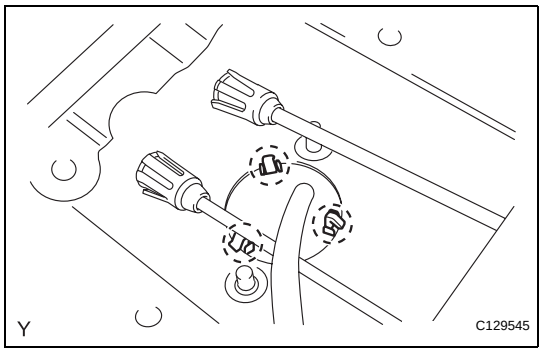

(d) Connect the control cable to the body with the 2 nuts.
Torque: 5.5 N*m (56 kgf*cm, 49 in.*lbf)

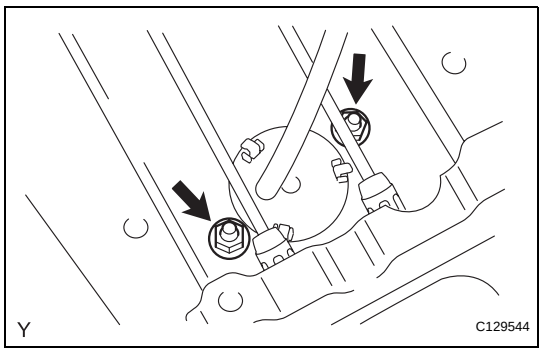

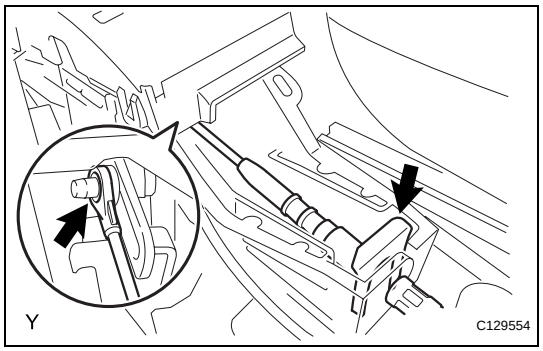

(e) Connect the control cable with a new lock clip.

2. **INSTALL FRONT CONSOLE BOX (See page IP-31)**
3. **INSTALL CONSOLE UPPER REAR PANEL SUB-ASSEMBLY (See page IP-31)**
4. **INSTALL PARKING BRAKE HOLE COVER SUB-ASSEMBLY (See page IP-32)**

AUTOMATIC TRANSMISSION UNIT

COMPONENTS

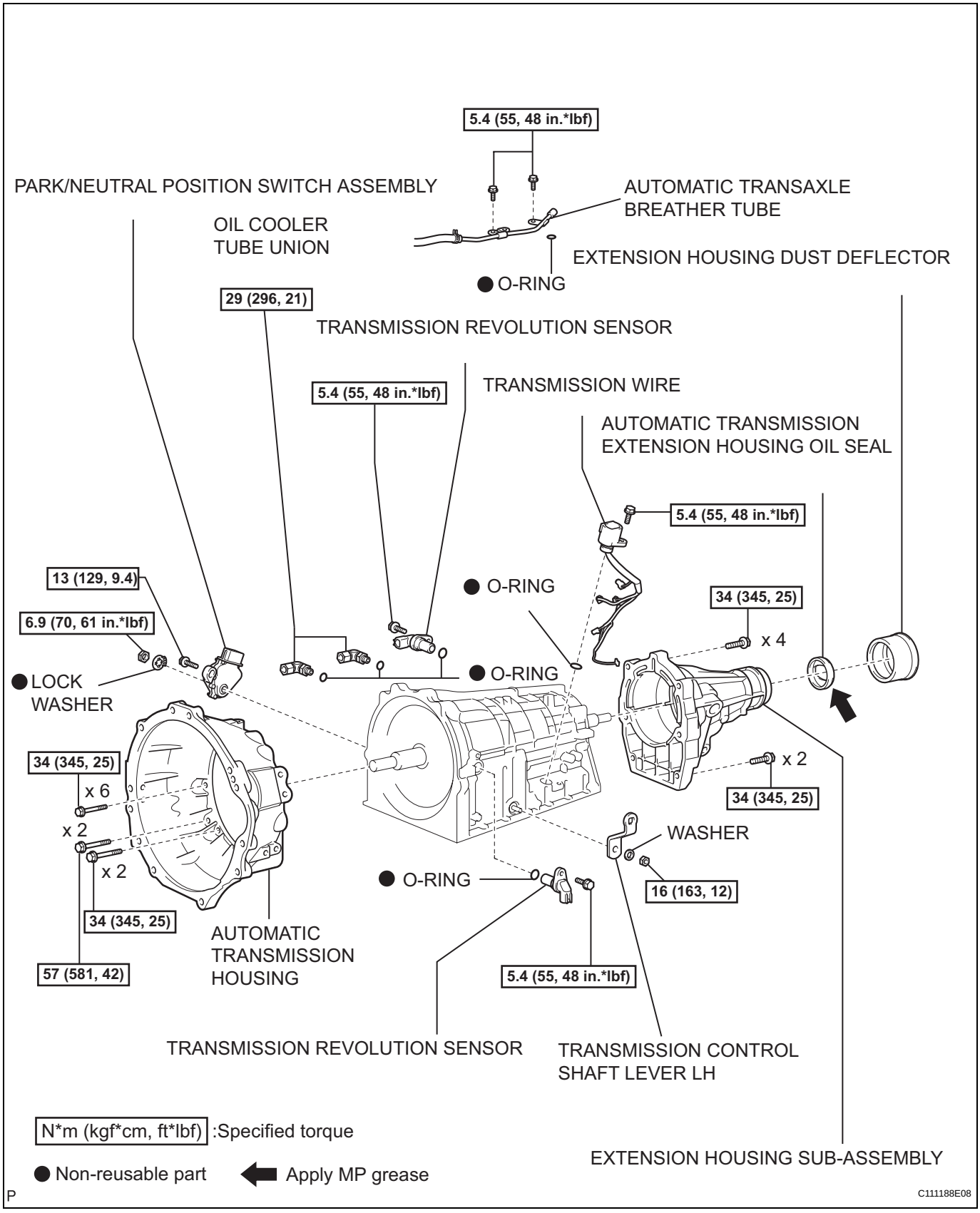

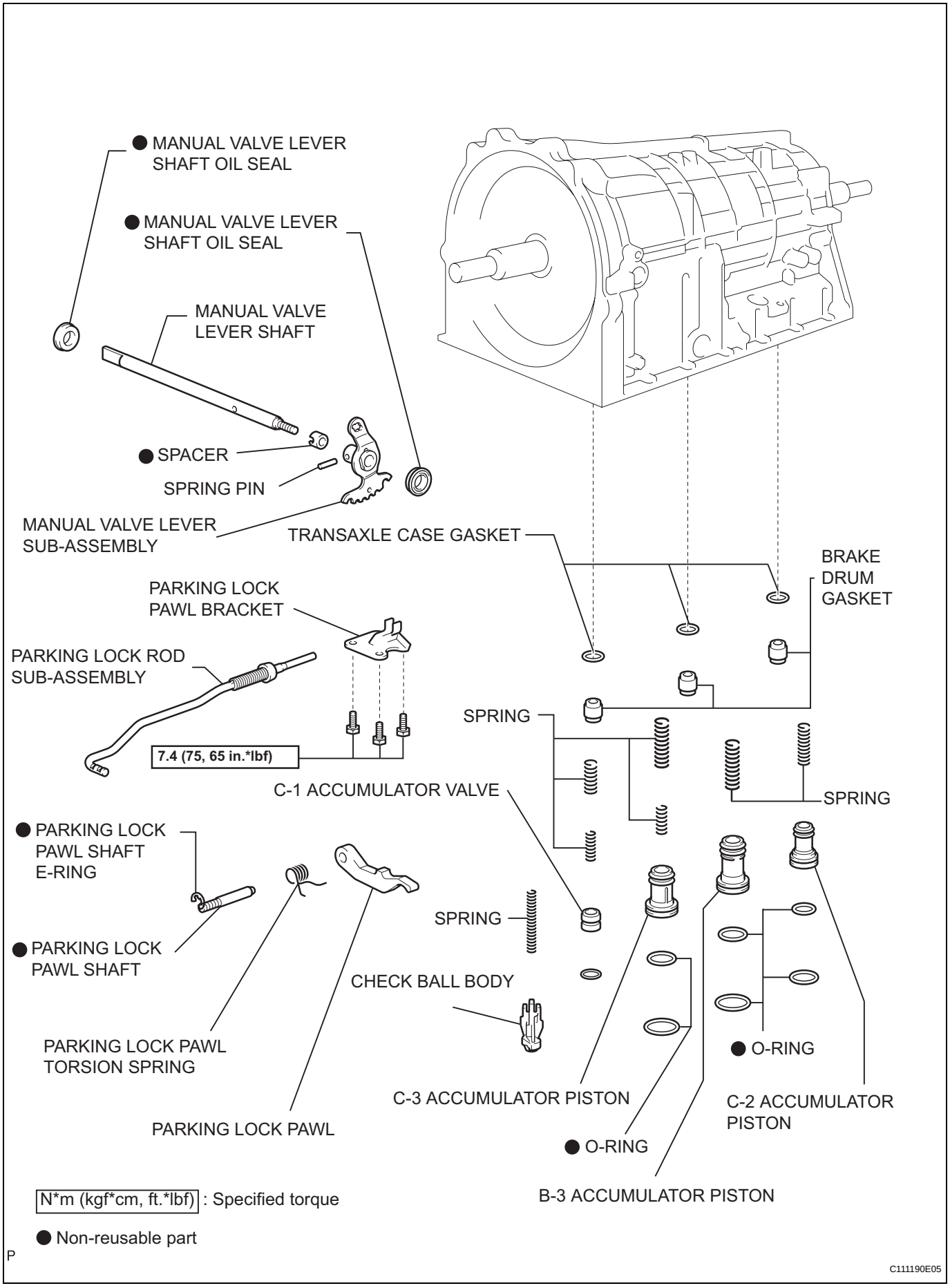
● MANUAL VALVE LEVER SHAFT OIL SEAL
● MANUAL VALVE LEVER SHAFT OIL SEAL
MANUAL VALVE LEVER SHAFT
● SPACER
SPRING PIN
MANUAL VALVE LEVER SUB-ASSEMBLY
TRANSAXLE CASE GASKET
BRAKE DRUM GASKET
PARKING LOCK PAWL BRACKET
PARKING LOCK ROD SUB-ASSEMBLY
7.4 (75, 65 in.*lbf)
SPRING
C-1 ACCUMULATOR VALVE
SPRING
● PARKING LOCK PAWL SHAFT E-RING
● PARKING LOCK PAWL SHAFT
SPRING
CHECK BALL BODY
● O-RING
PARKING LOCK PAWL TORSION SPRING
C-3 ACCUMULATOR PISTON
C-2 ACCUMULATOR PISTON
PARKING LOCK PAWL
● O-RING
B-3 ACCUMULATOR PISTON
N*m (kgf*cm, ft.*lbf) : Specified torque
● Non-reusable part
P
C111190E05

AT

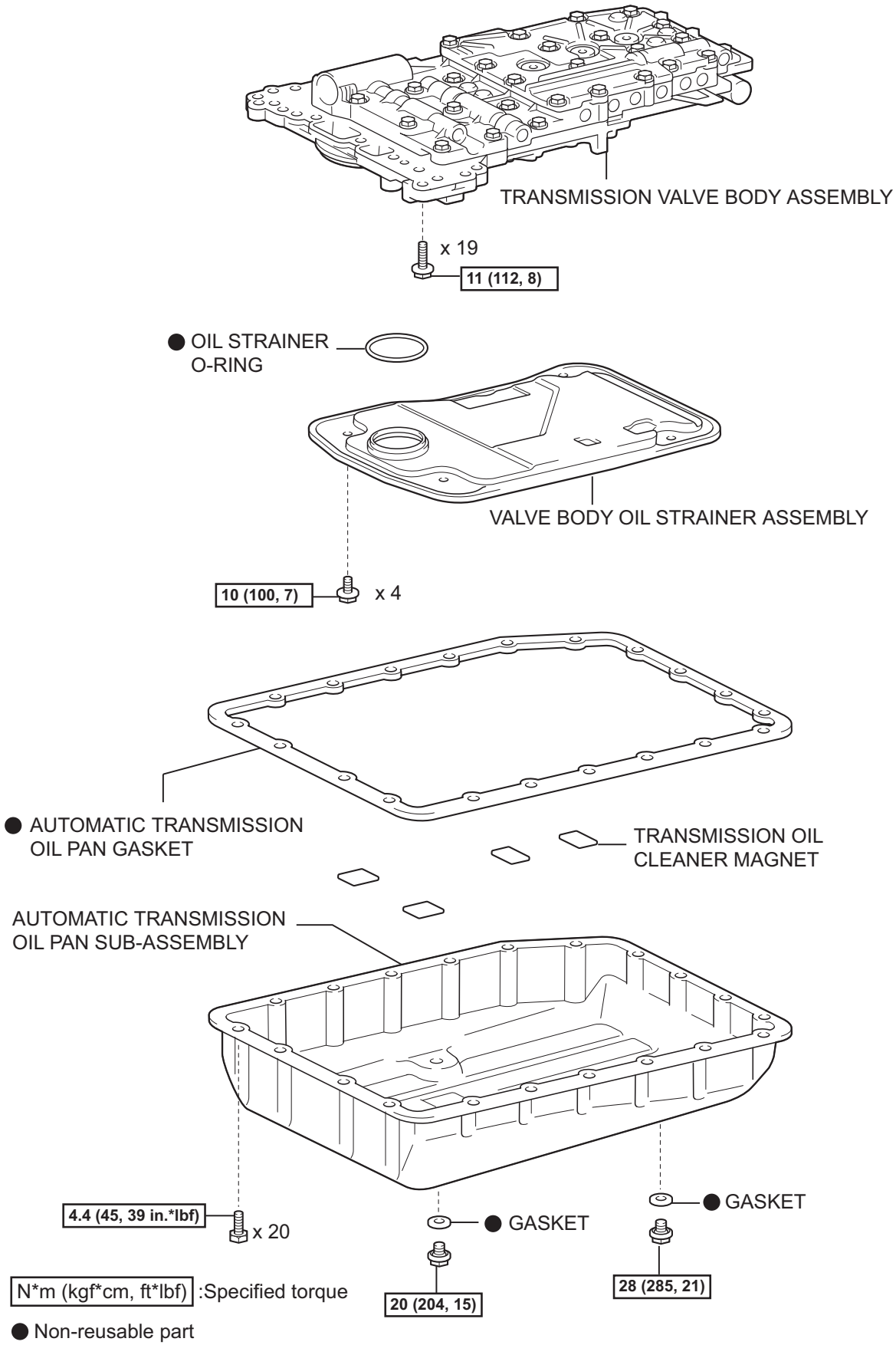

AT

P

C111191E04

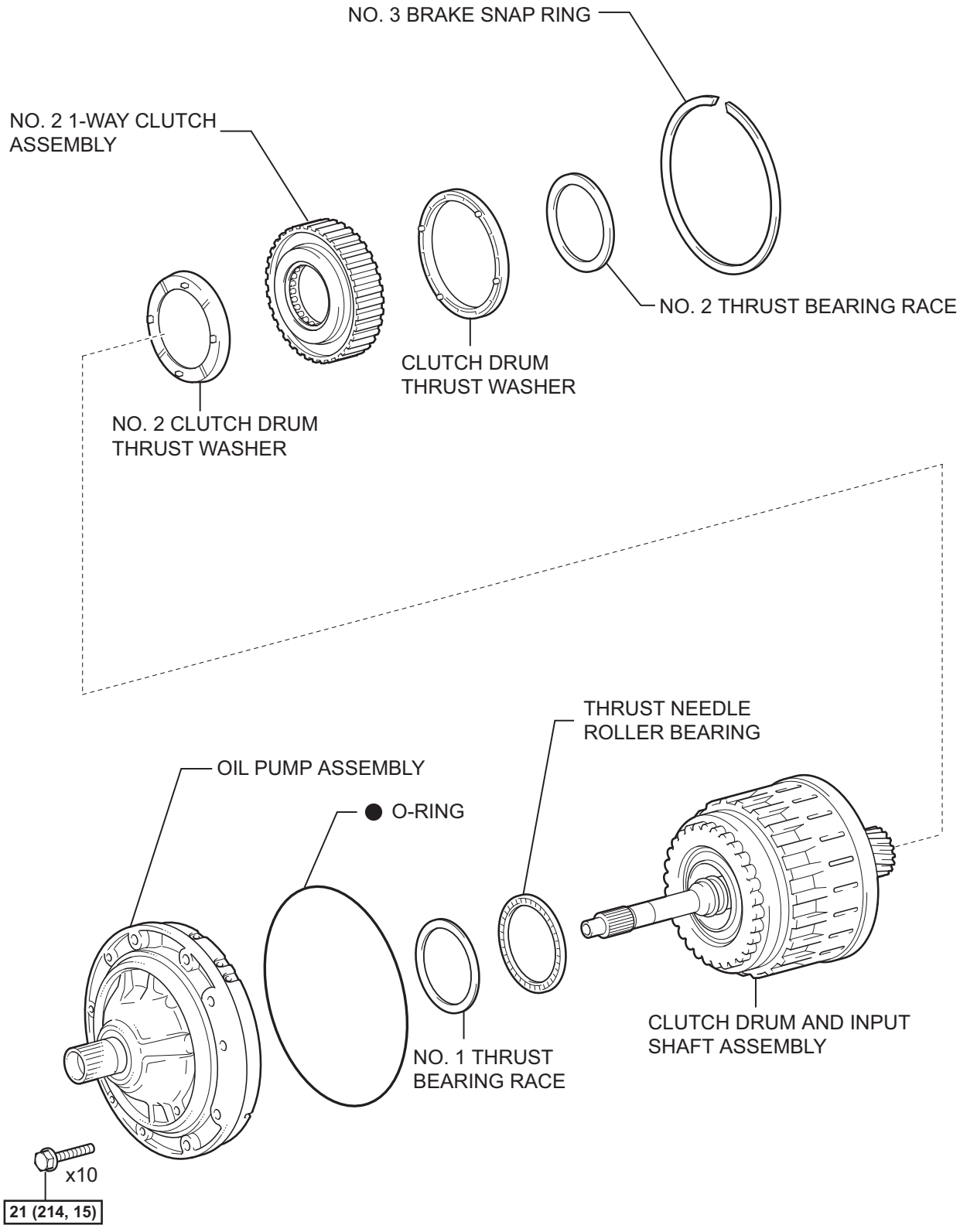

N*m (kgf*cm, ft*lbf) :Specified torque

● Non-reusable part

P

C111194E04

AT

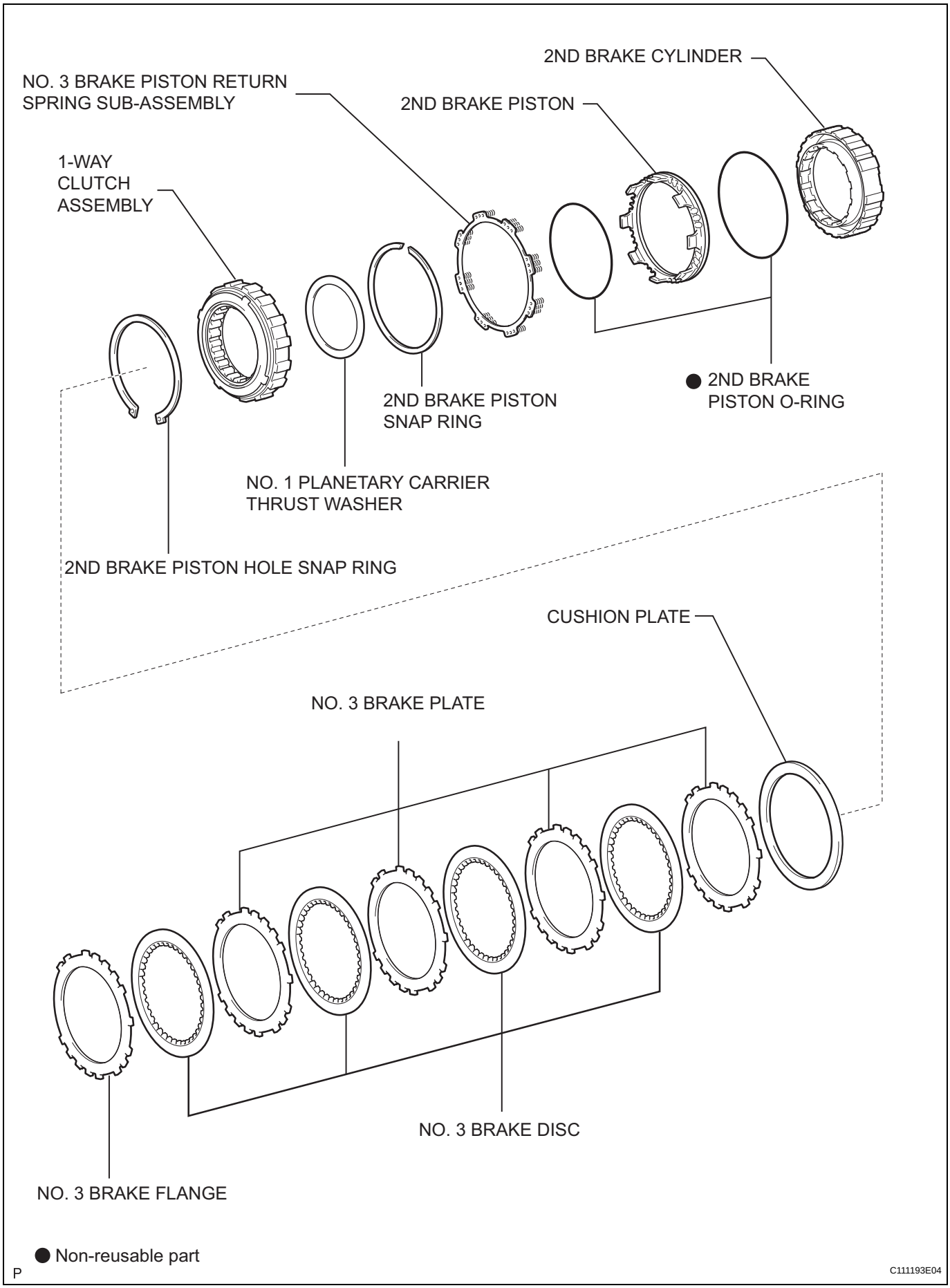
2ND BRAKE CYLINDER
NO. 3 BRAKE PISTON RETURN SPRING SUB-ASSEMBLY
2ND BRAKE PISTON
1-WAY CLUTCH ASSEMBLY
2ND BRAKE PISTON SNAP RING
● 2ND BRAKE PISTON O-RING
NO. 1 PLANETARY CARRIER THRUST WASHER
2ND BRAKE PISTON HOLE SNAP RING
CUSHION PLATE
NO. 3 BRAKE PLATE
NO. 3 BRAKE DISC
NO. 3 BRAKE FLANGE
● Non-reusable part
P
C111193E04

AT

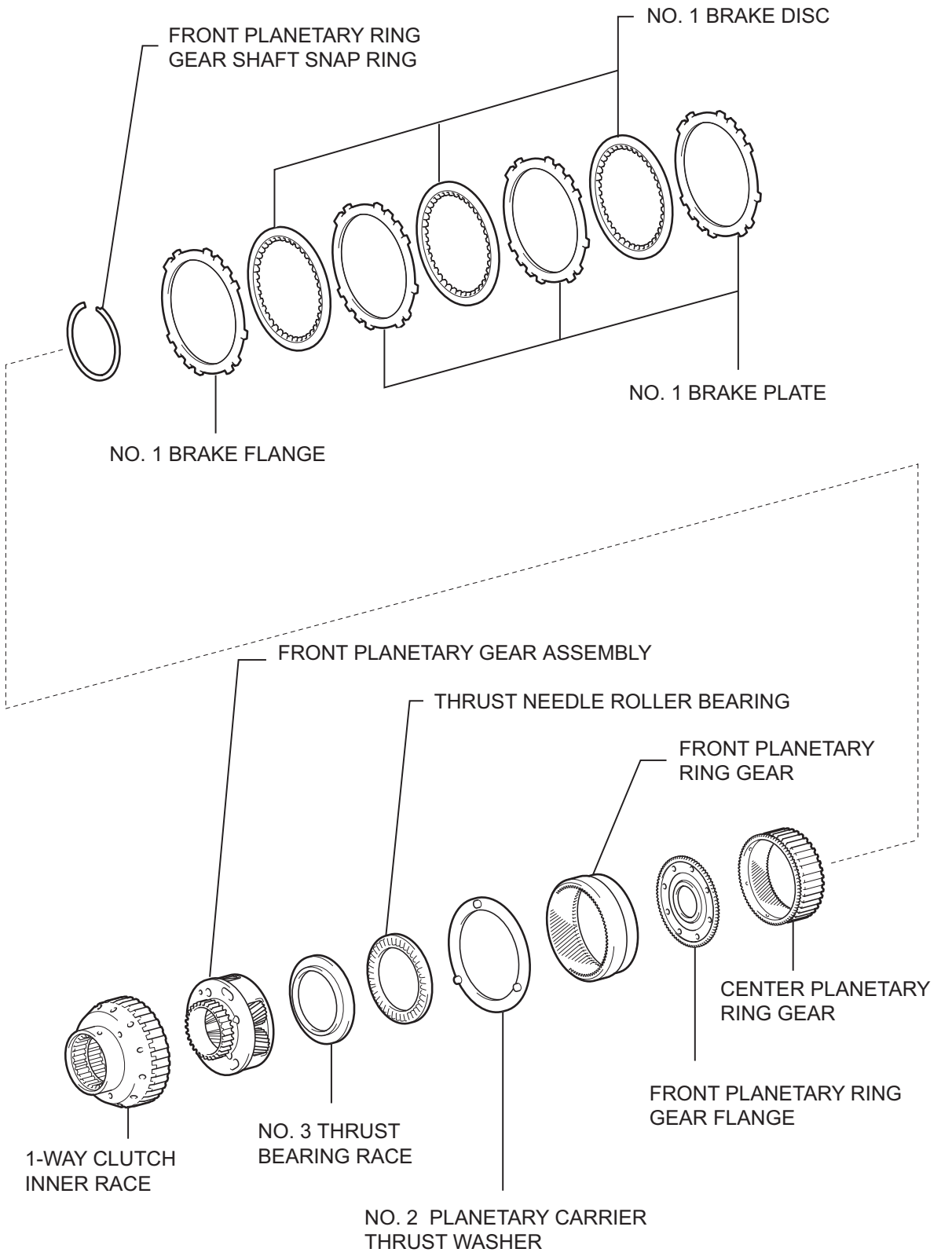

AT

P

C111192E05

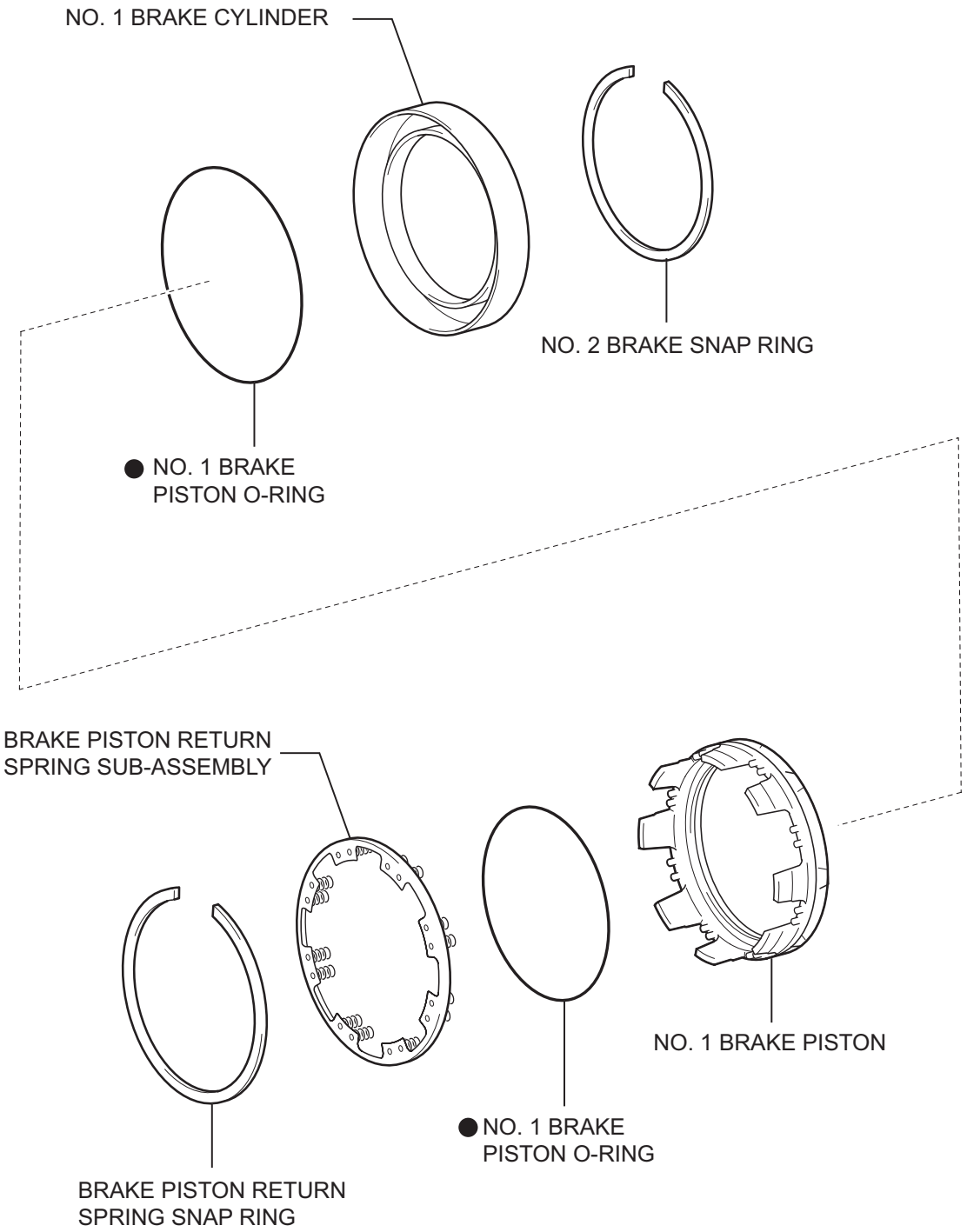

● Non-reusable part

P

C111197E04

AT

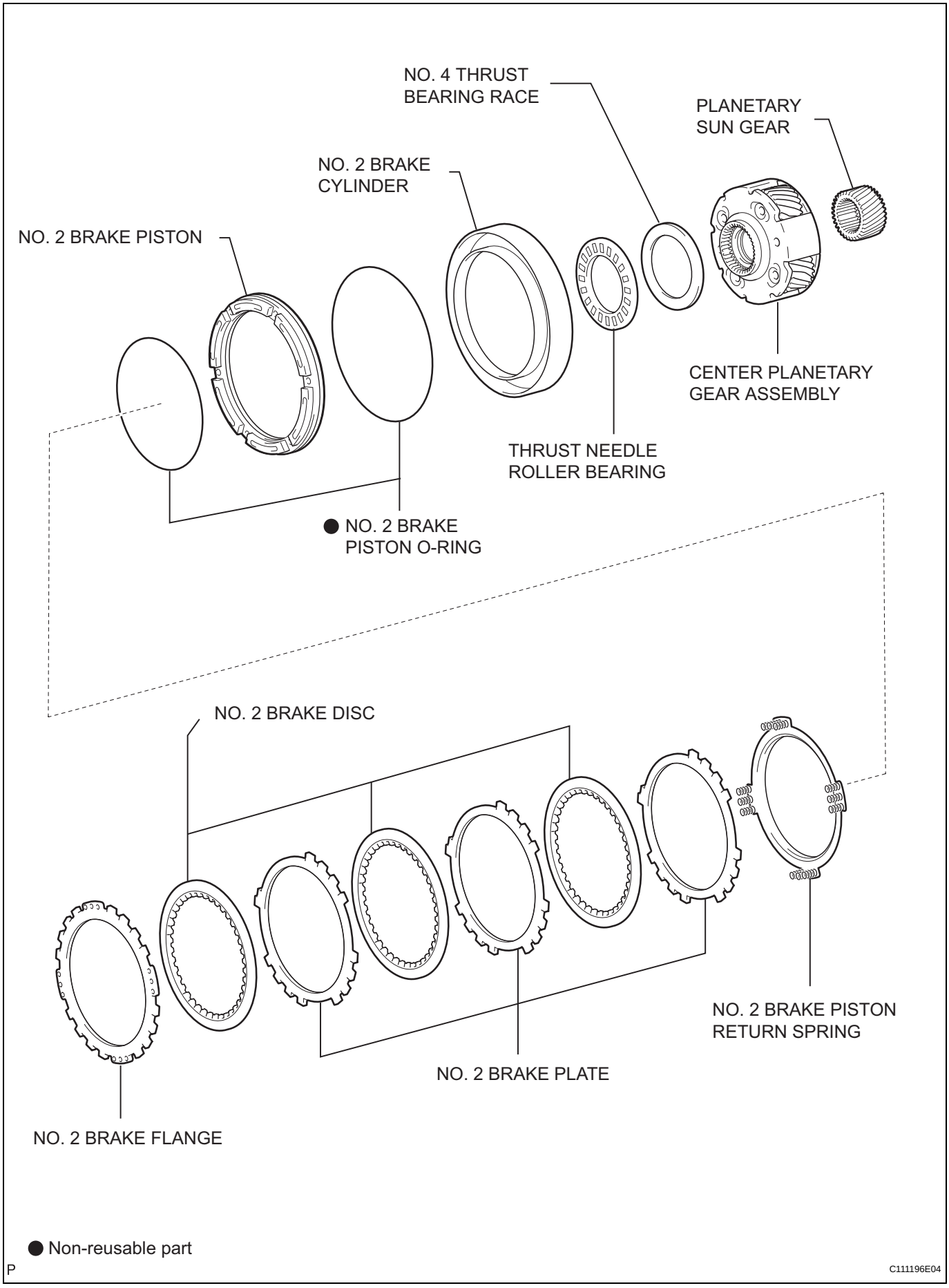
NO. 4 THRUST BEARING RACE
PLANETARY SUN GEAR
NO. 2 BRAKE CYLINDER
NO. 2 BRAKE PISTON
CENTER PLANETARY GEAR ASSEMBLY
THRUST NEEDLE ROLLER BEARING
● NO. 2 BRAKE PISTON O-RING
NO. 2 BRAKE DISC
NO. 2 BRAKE PISTON RETURN SPRING
NO. 2 BRAKE PLATE
NO. 2 BRAKE FLANGE
● Non-reusable part
P
C111196E04

AT

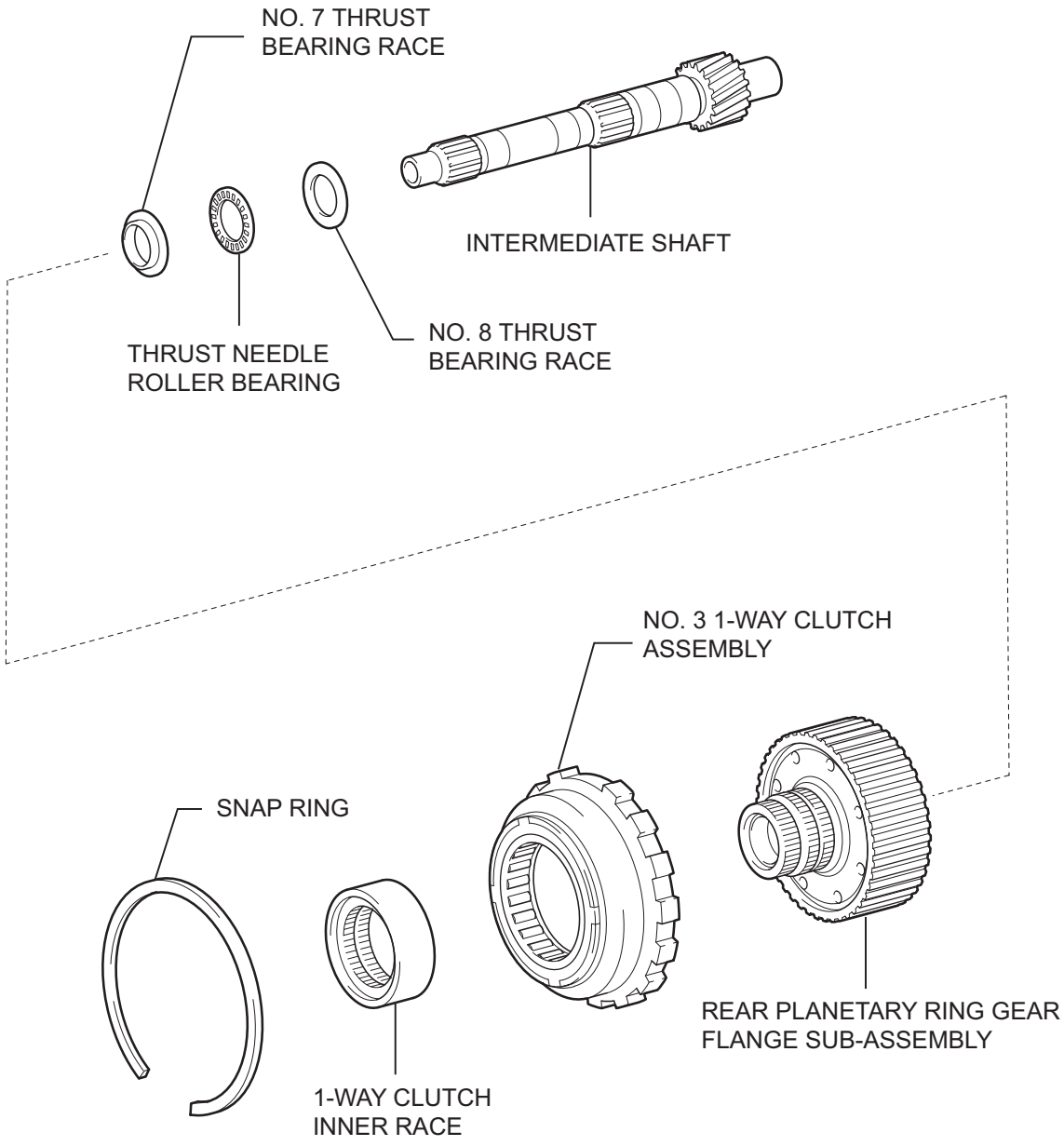

AT

P

C111195E05

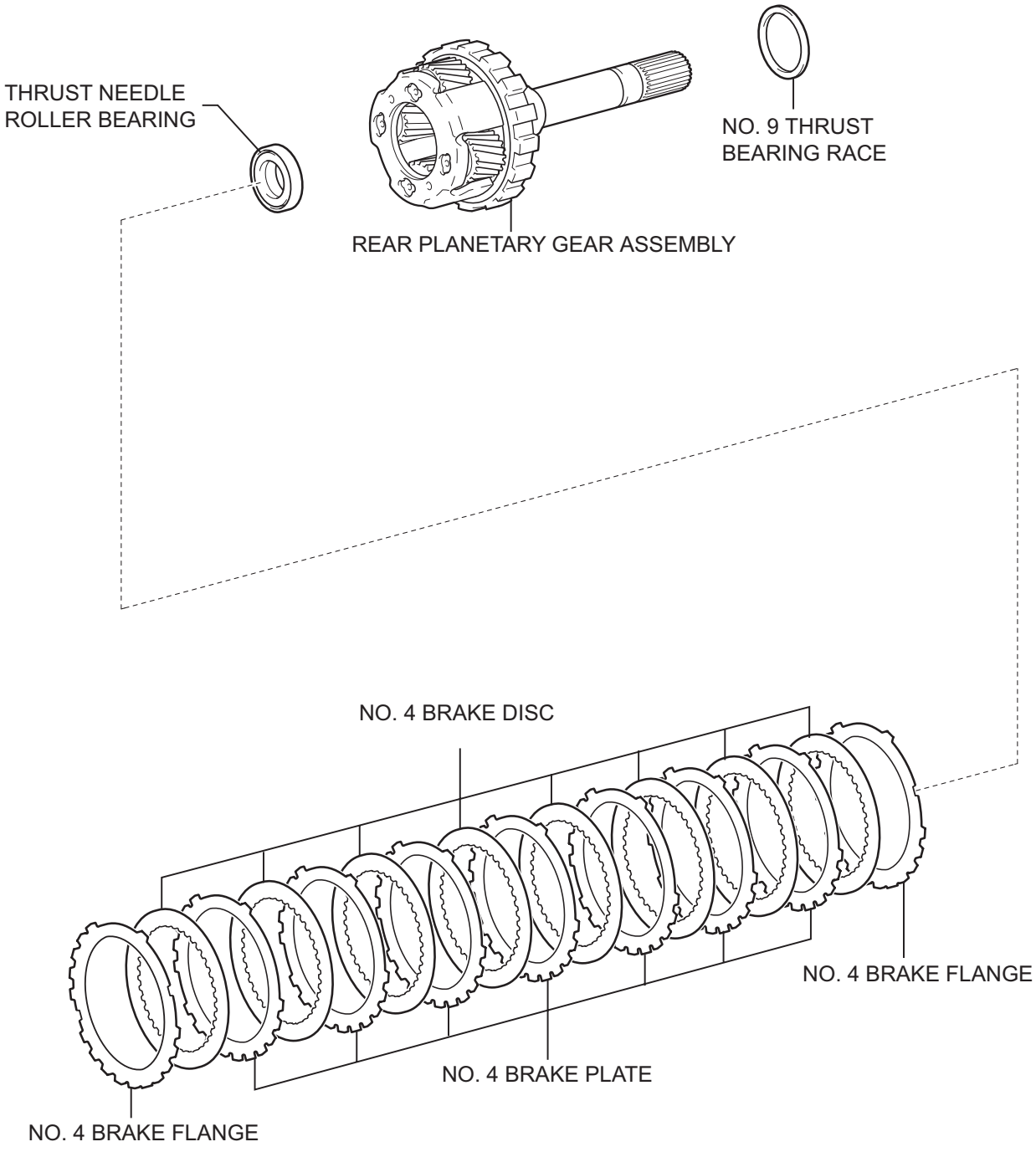

AT

P

C129562E01

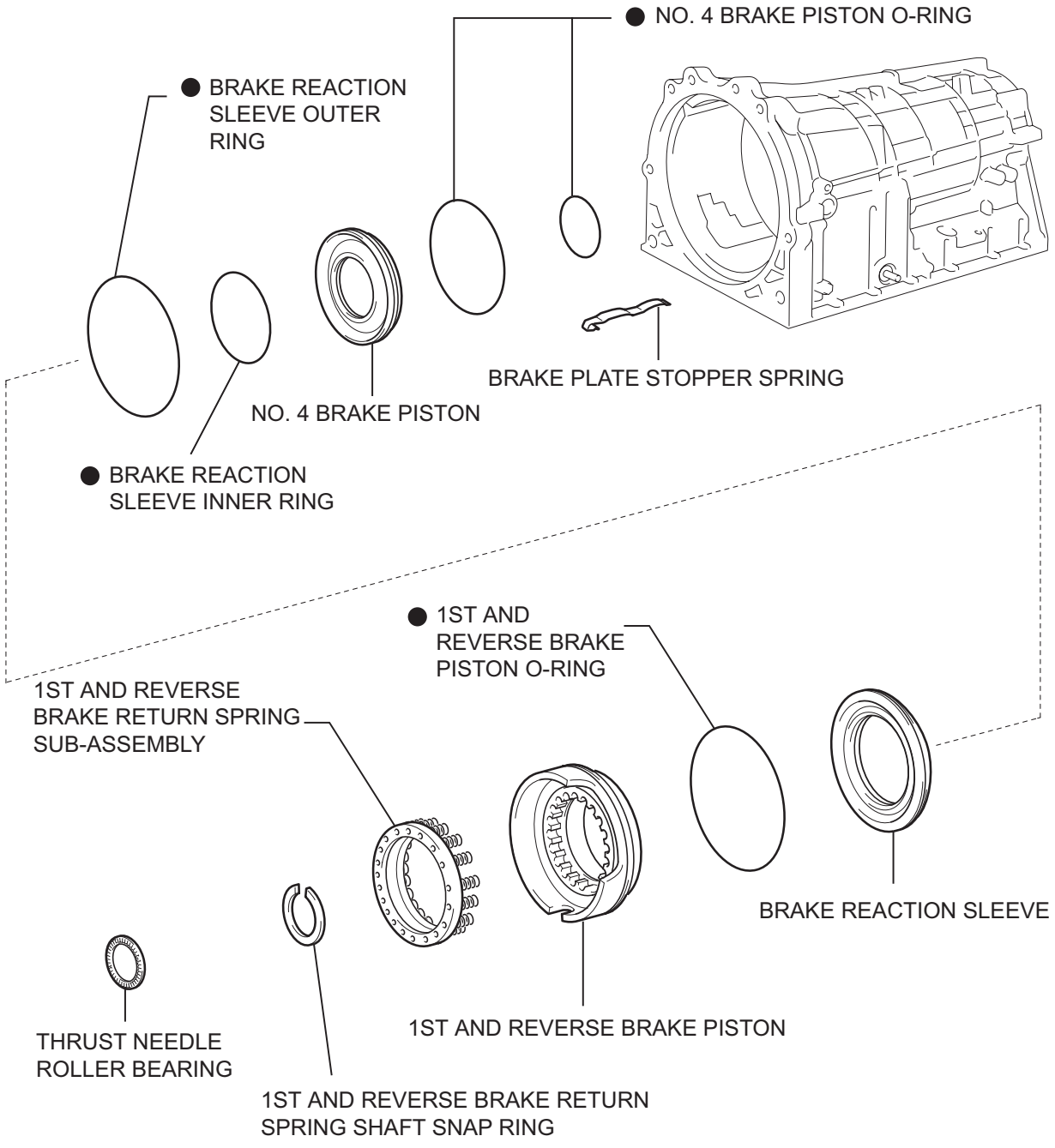
● NO. 4 BRAKE PISTON O-RING
● BRAKE REACTION SLEEVE OUTER RING
BRAKE PLATE STOPPER SPRING
NO. 4 BRAKE PISTON
● BRAKE REACTION SLEEVE INNER RING
● 1ST AND REVERSE BRAKE PISTON O-RING
1ST AND REVERSE BRAKE RETURN SPRING SUB-ASSEMBLY
BRAKE REACTION SLEEVE
THRUST NEEDLE ROLLER BEARING
1ST AND REVERSE BRAKE PISTON
1ST AND REVERSE BRAKE RETURN SPRING SHAFT SNAP RING
● Non-reusable part
P
C111198E04

DISASSEMBLY

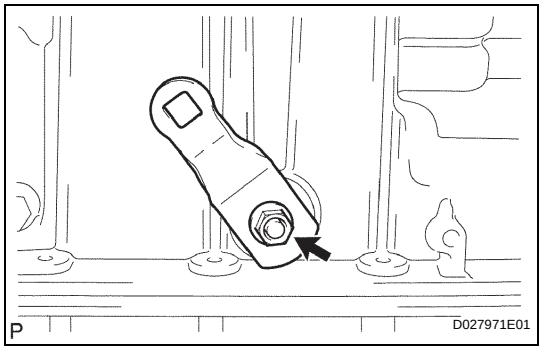

1. REMOVE TRANSMISSION CONTROL SHAFT LEVER LH

(a) Remove the nut, washer and control shaft lever LH.

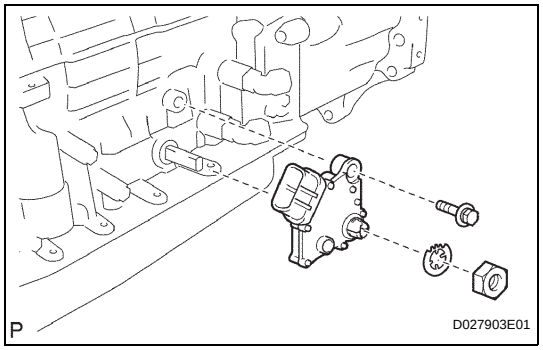

2. REMOVE PARK/NEUTRAL POSITION SWITCH ASSEMBLY

(a) Using a screwdriver, pry out the lock washer.
(b) Remove the nut, lock washer and bolt.
(c) Remove the park/neutral position switch.

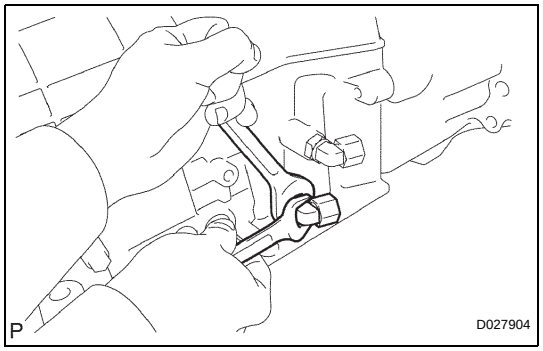

3. REMOVE OIL COOLER TUBE UNION

(a) Remove the 2 oil cooler tube unions.
(b) Remove the O-ring from the oil cooler tube union.

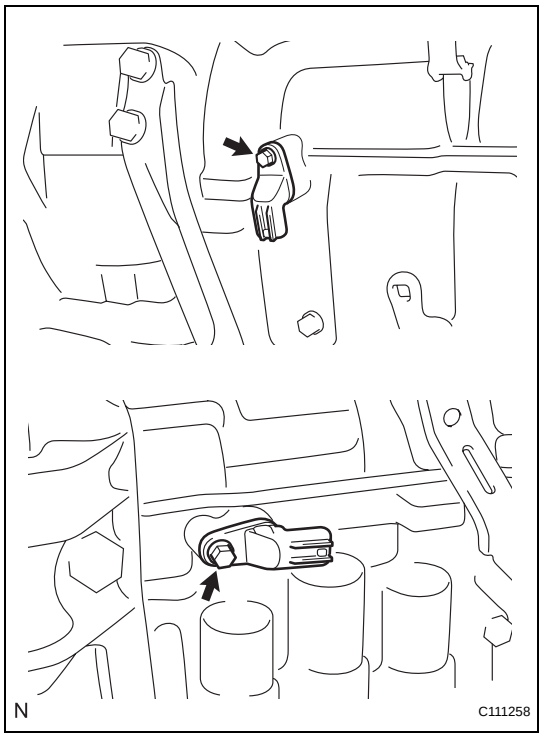

4. REMOVE TRANSMISSION REVOLUTION SENSOR

(a) Remove the 2 bolts and 2 transmission revolution sensors.
(b) Remove the O-ring from each sensor.

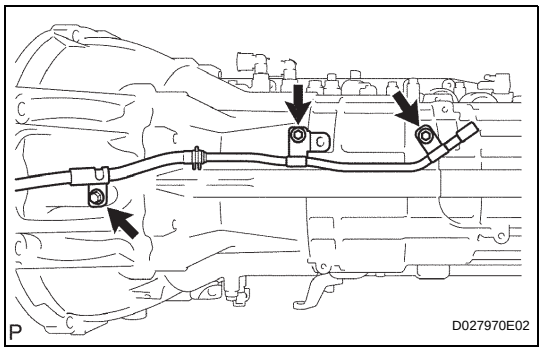

5. REMOVE AUTOMATIC TRANSAXLE BREATHER TUBE

(a) Remove the 3 bolts.
(b) Remove the breather tube.
(c) Remove the O-ring from breather tube.

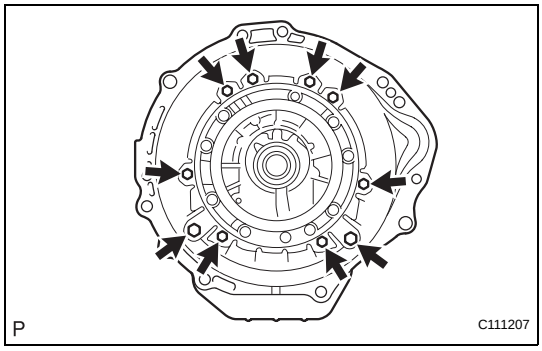

6. REMOVE AUTOMATIC TRANSMISSION HOUSING

(a) Remove the 10 bolts.
(b) Remove the transmission housing.

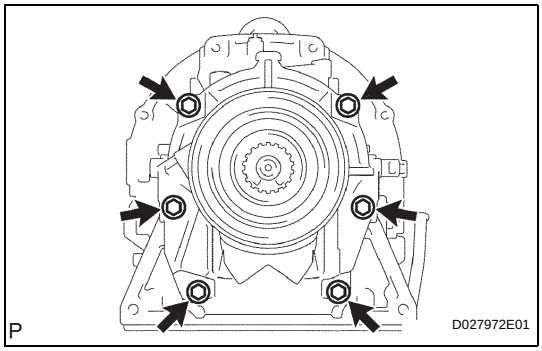

7. REMOVE EXTENSION HOUSING SUB-ASSEMBLY

(a) Remove the 6 bolts.
(b) Remove the extension housing assembly.
HINT:
Use a brass bar and hammer to remove the extension housing assembly.
(c) Remove the gasket from the extension housing assembly.

AT

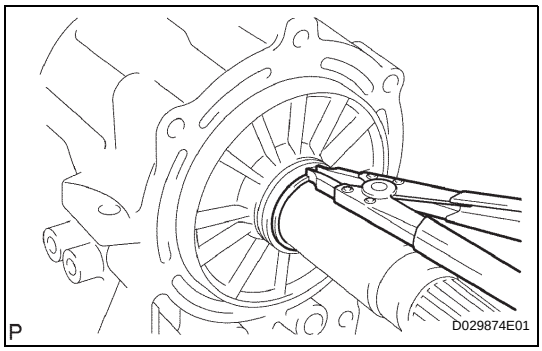

(d) Using a snap ring expander, remove the snap ring.
(e) Remove the thrust needle roller bearing and 2 bearing races.

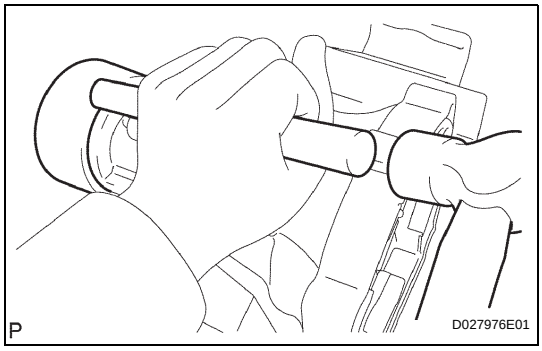

8. REMOVE EXTENSION HOUSING DUST DEFLECTOR

(a) Using a brass bar and hammer, remove the extension housing dust deflector.

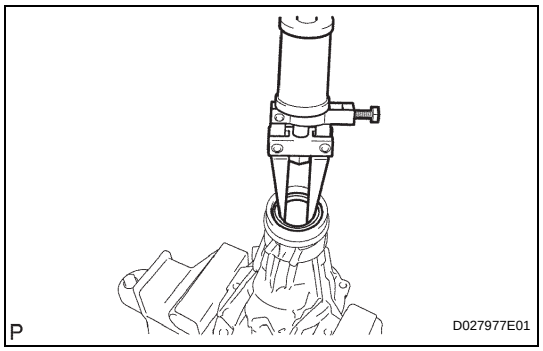

9. REMOVE AUTOMATIC TRANSMISSION EXTENSION HOUSING OIL SEAL

(a) Using SST, tap out the oil seal.
SST 09308-00010

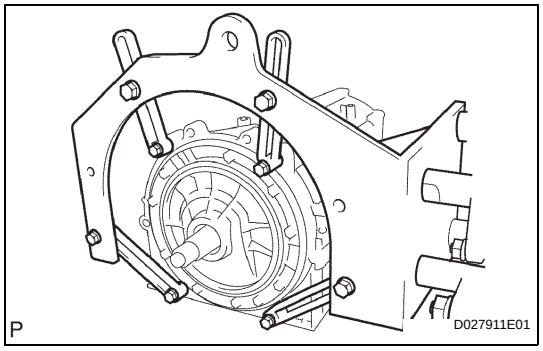

10. FIX AUTOMATIC TRANSMISSION CASE SUB-ASSEMBLY

(a) Install the transmission case onto the overhaul attachment.

11. REMOVE AUTOMATIC TRANSMISSION OIL PAN SUB-ASSEMBLY

NOTICE:
Do not turn the transmission over as this will contaminate the valve body with foreign matter on the bottom of the pan.

(a) Remove the drain plug and 20 bolts.

12. INSPECT AUTOMATIC TRANSMISSION OIL PAN SUB-ASSEMBLY (See page AT-211)

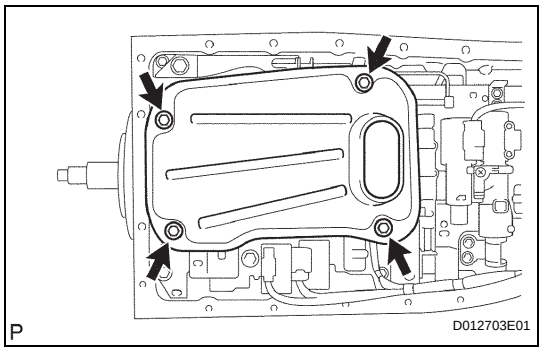

13. REMOVE VALVE BODY OIL STRAINER ASSEMBLY

(a) Turn over the transmission.
(b) Remove the 4 bolts holding the valve body oil strainer assembly from the valve body.
(c) Remove the O-ring form the valve body oil strainer assembly.

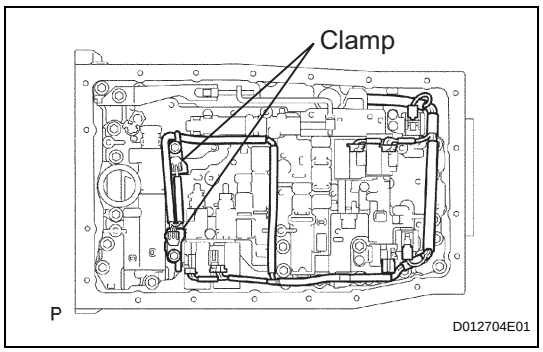

14. REMOVE TRANSMISSION WIRE

(a) Remove the ATF temperature sensor.
(b) Remove the 2 bolts and 2 clamps.
(c) Disconnect the 7 connectors from the shift solenoid valves.

AT

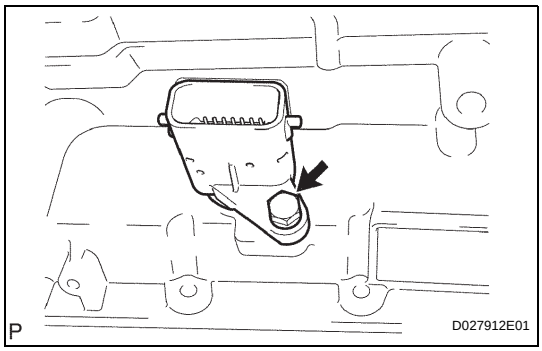

(d) Remove the bolt from the case.
(e) Pull the transmission wire out of the transmission case.
(f) Remove the O-ring from the transmission wire.

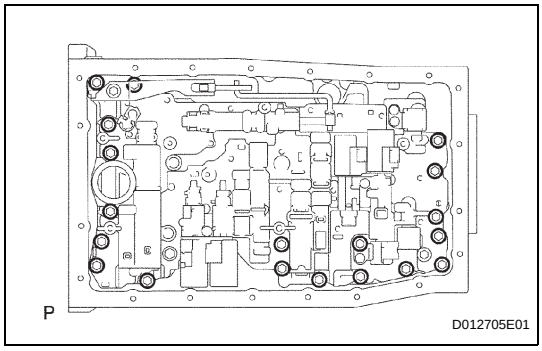

15. REMOVE TRANSMISSION VALVE BODY ASSEMBLY
(a) Remove the 19 bolts.
(b) Remove the valve body assembly.

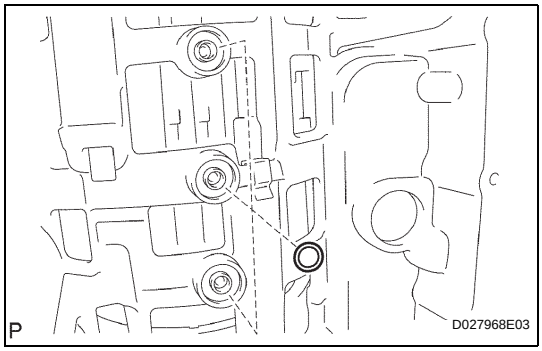

16. REMOVE TRANSAXLE CASE GASKET
(a) Remove the 3 transaxle case gaskets.

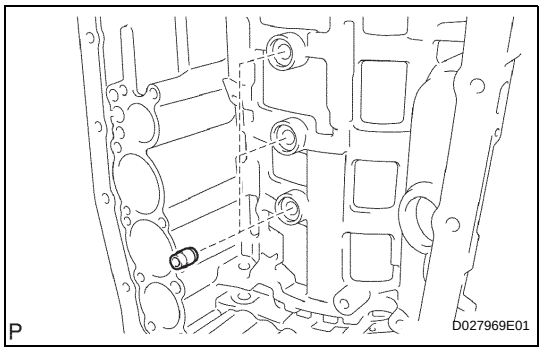

17. REMOVE BRAKE DRUM GASKET
(a) Remove the 3 brake drum gaskets.

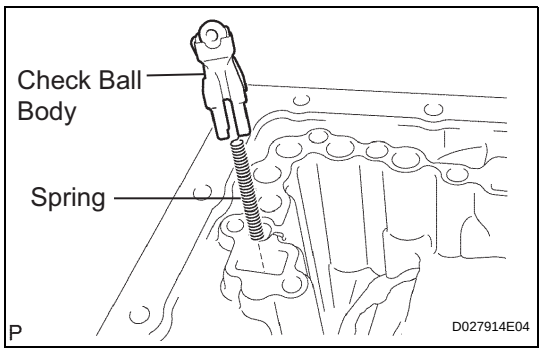

18. REMOVE CHECK BALL BODY
(a) Remove the check ball body and spring.

AT

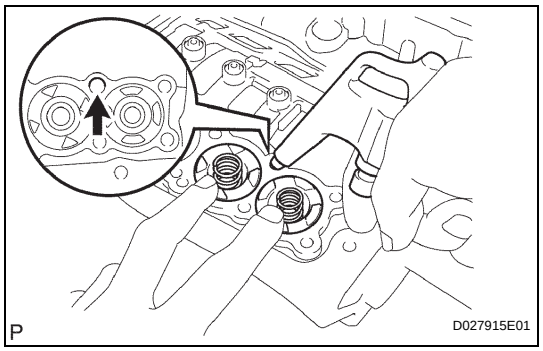

19. REMOVE C-2 ACCUMULATOR PISTON

(a) Applying compressed air to the oil hole, remove the C-2 accumulator piston and spring.

(b) Remove the 2 O-rings from the piston.

NOTICE:

Be careful as the C-3 and B-3 accumulator pistons may jump out.

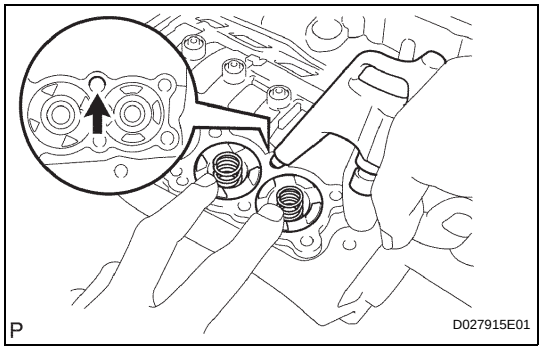

20. REMOVE B-3 ACCUMULATOR PISTON

(a) Applying compressed air to the oil hole, remove the B-3 accumulator piston and spring.

(b) Remove the 2 O-rings from the piston.

NOTICE:

Be careful as the C-3 accumulator piston may jump out.

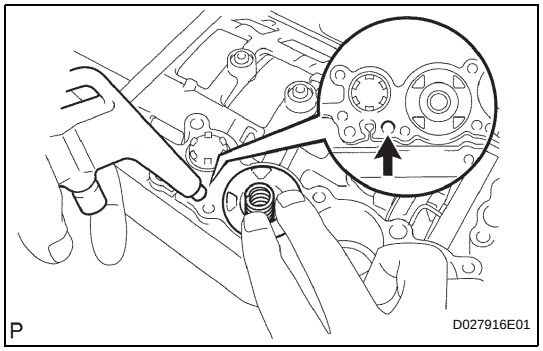

21. REMOVE C-3 ACCUMULATOR PISTON

(a) Applying compressed air to the oil hole, remove the C-3 accumulator piston and the 2 springs.

(b) Remove the 2 O-rings from the piston.

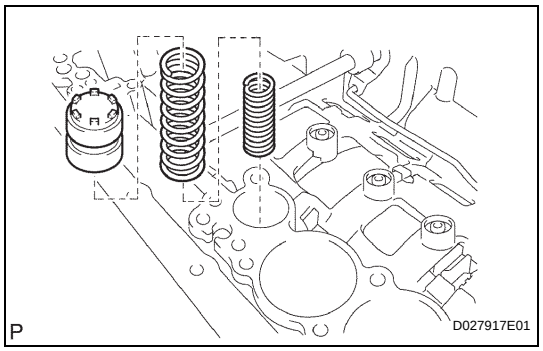

22. REMOVE C-1 ACCUMULATOR VALVE

(a) Remove the C-1 accumulator valve and 2 springs.

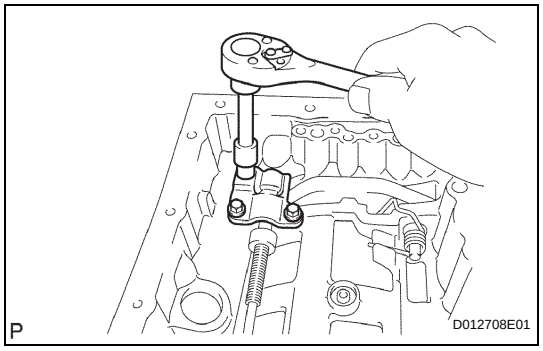

23. REMOVE PARKING LOCK PAWL BRACKET

(a) Remove the 3 bolts and parking lock pawl bracket.

AT

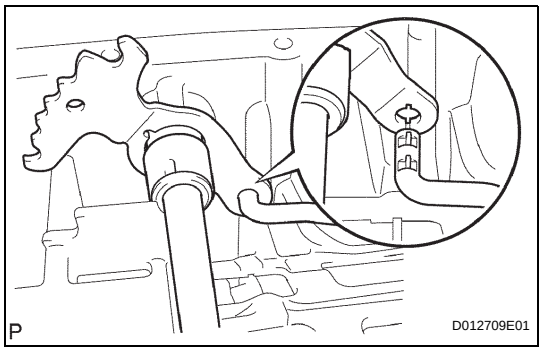

24. REMOVE PARKING LOCK ROD SUB-ASSEMBLY

(a) Disconnect the parking lock rod from the manual valve lever.

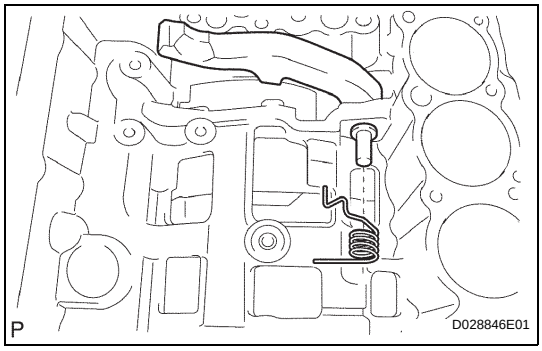

25. REMOVE PARKING LOCK PAWL SHAFT

(a) Pull out the parking lock pawl shaft from the front side, and then remove the lock pawl and spring.

(b) Remove the E-ring from the shaft.

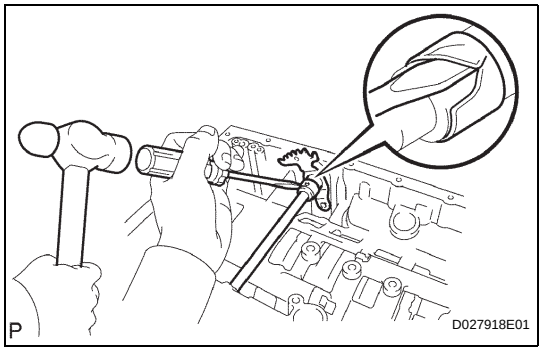

26. REMOVE MANUAL VALVE LEVER SUB-ASSEMBLY

(a) Using a hammer and screwdriver, cut off the spacer and remove it from the shaft.

AT

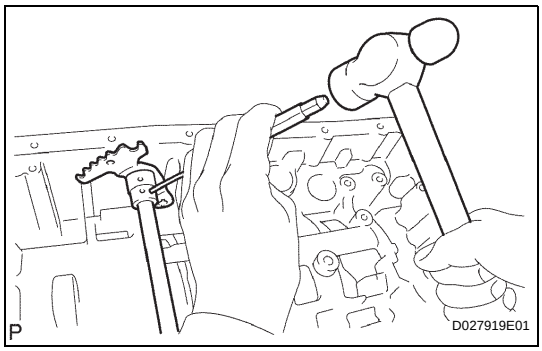

(b) Using a pin punch and hammer, tap out the spring pin.

HINT:

Slowly drive out the spring pin so that it does not fall into the transmission case.

(c) Pull the manual valve lever shaft out through the case, and remove the manual valve lever.

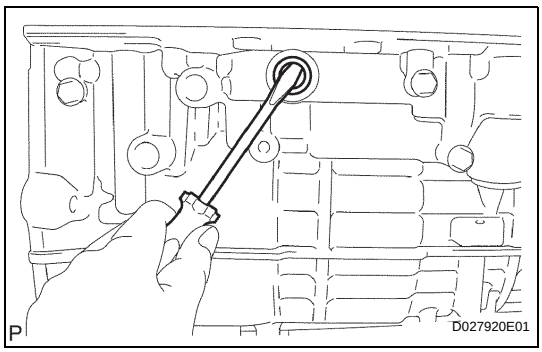

27. REMOVE MANUAL VALVE LEVER SHAFT OIL SEAL

(a) Using a screwdriver, remove the 2 oil seals.

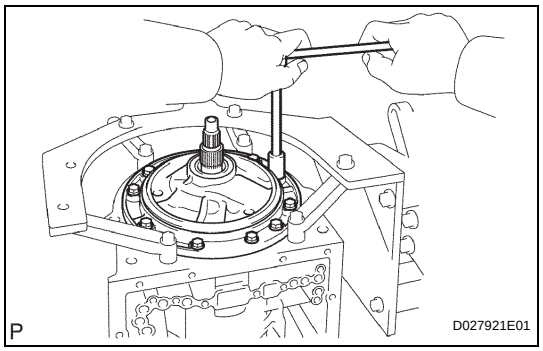

28. REMOVE OIL PUMP ASSEMBLY

(a) Remove the 10 bolts holding the oil pump from the transmission case.

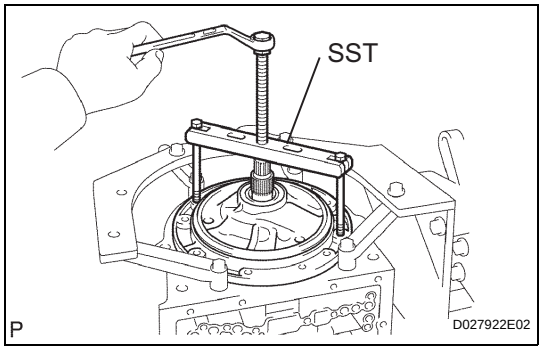

(b) Using SST, remove the oil pump.
SST 09350-30020 (09350-07020)

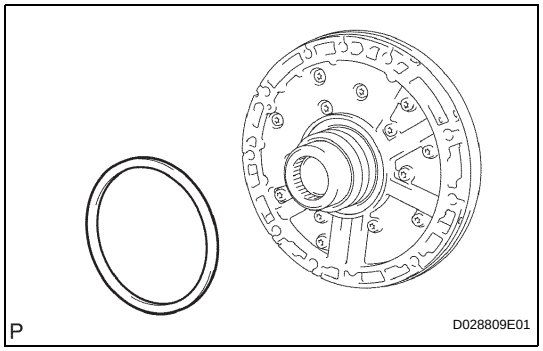

(c) Remove the No. 1 thrust bearing race from the front oil pump.

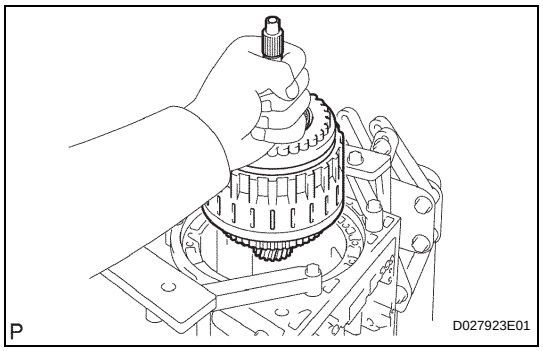

29. REMOVE CLUTCH DRUM AND INPUT SHAFT ASSEMBLY

(a) Remove the clutch drum and input shaft drum assembly from the transmission case.

AT

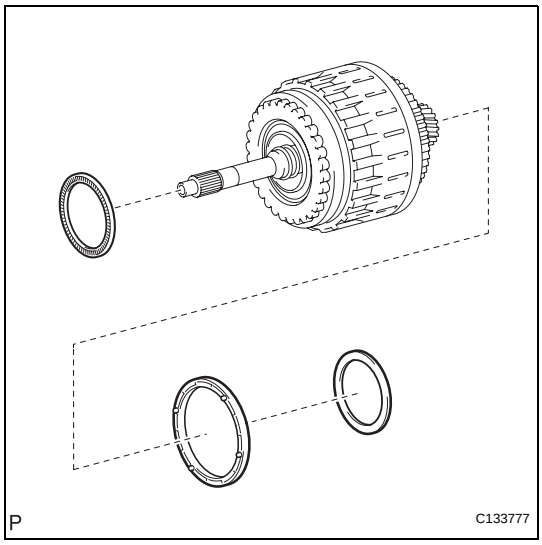

(b) Remove the clutch drum thrust washer, No. 2 thrust bearing race and thrust needle roller bearing.

30. INSPECT NO. 2 1-WAY CLUTCH ASSEMBLY (See page AT-212)

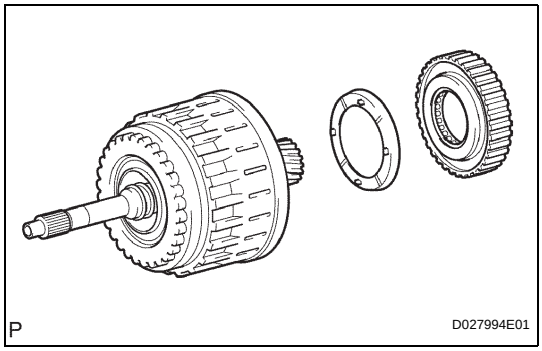

31. REMOVE NO. 2 1-WAY CLUTCH ASSEMBLY

(a) Remove the No. 2 1-way clutch assembly and No. 2 clutch drum thrust washer from the clutch drum and input shaft assembly.

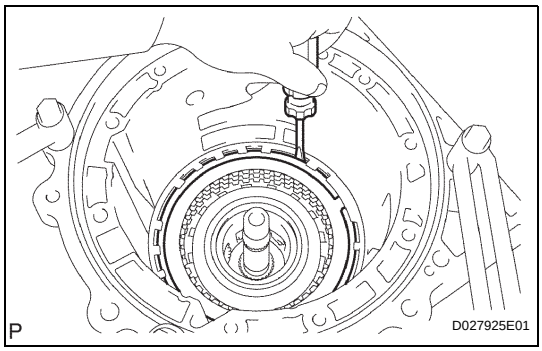

32. REMOVE NO. 3 BRAKE SNAP RING

(a) Using a screwdriver, remove the No. 3 brake snap ring from the case.

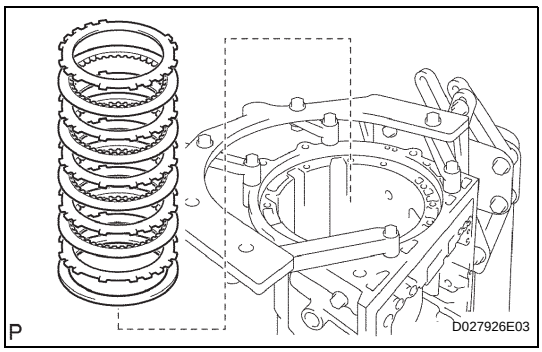

33. REMOVE NO. 3 BRAKE DISC

(a) Remove the flange, cushion plate, 4 discs and 4 plates from the case.

34. INSPECT NO. 3 BRAKE DISC (See page AT-212)

AT

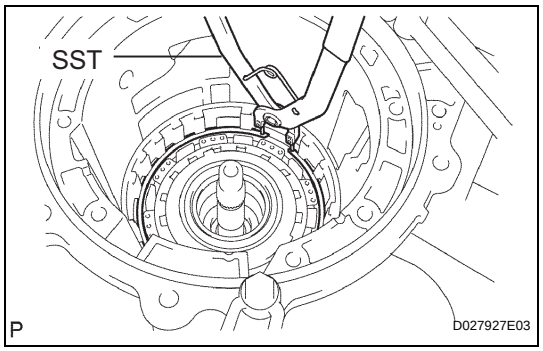

35. REMOVE 2ND BRAKE PISTON HOLE SNAP RING

(a) Using SST, remove the snap ring.
SST 09350-30020 (09350-07060)

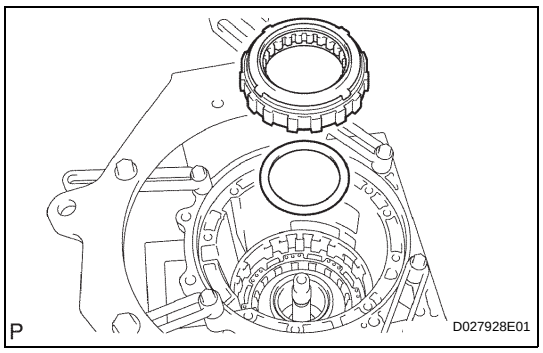

36. REMOVE 1-WAY CLUTCH ASSEMBLY

(a) Remove the 1-way clutch assembly and the No. 1 planetary carrier thrust washer from the case.

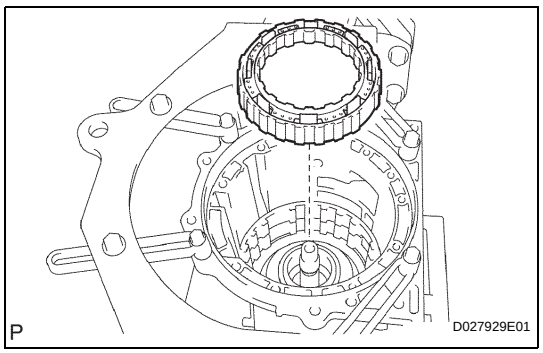

37. REMOVE 2ND BRAKE CYLINDER

(a) Remove the 2nd brake cylinder from the case.

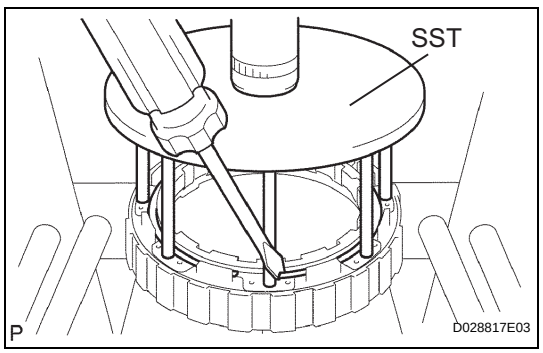

38. REMOVE 2ND BRAKE PISTON

(a) Using SST and a press, remove the snap ring.
SST 09351-40010

(b) Remove the 2nd brake piston return spring from the 2nd brake piston.

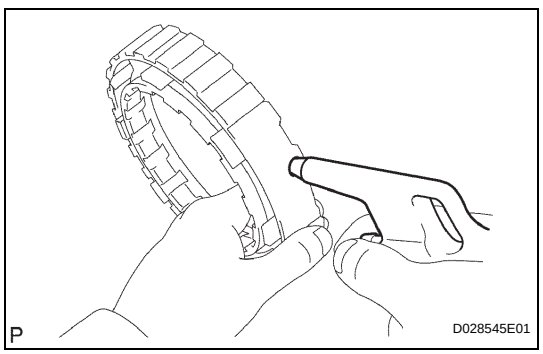

(c) Hold the 2nd brake piston and apply compressed air (392 kPa, 4.0 kgf/cm^2, 57 psi) to the brake cylinder to remove the 2nd brake piston.

AT

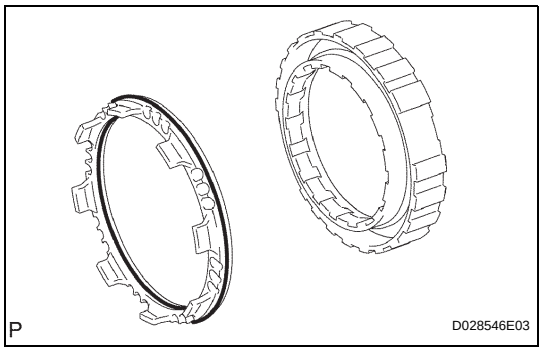

(d) Remove the 2 O-rings from the 2nd brake piston.

39. INSPECT NO. 3 BRAKE PISTON RETURN SPRING SUB-ASSEMBLY (See page AT-212)

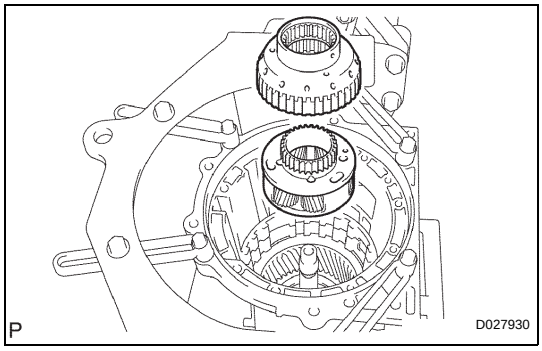

40. REMOVE FRONT PLANETARY GEAR ASSEMBLY

(a) Remove the front planetary gear and 1 way clutch inner race from the case.

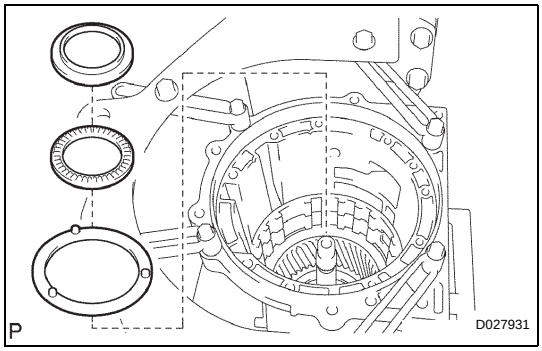

(b) Remove the thrust needle roller bearing, thrust bearing race No. 3 and planetary carrier thrust washer No. 2 from the front planetary gear.

41. INSPECT FRONT PLANETARY GEAR ASSEMBLY (See page AT-212)

42. INSPECT 1-WAY CLUTCH ASSEMBLY (See page AT-213)

AT

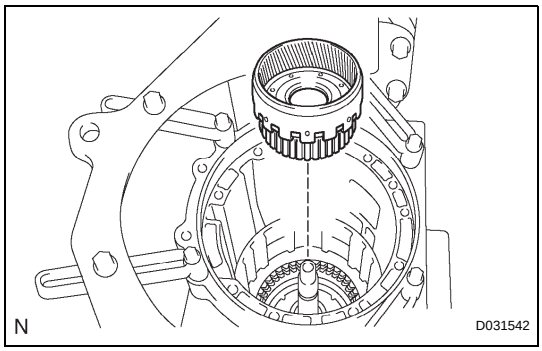

43. REMOVE FRONT PLANETARY RING GEAR

(a) Remove the front planetary ring gear from the transmission case.

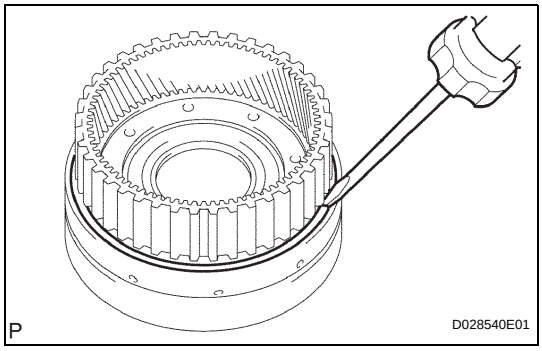

44. REMOVE CENTER PLANETARY RING GEAR

(a) Using a screwdriver, remove the snap ring.

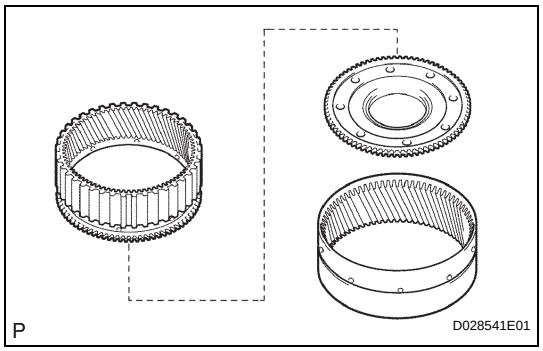

(b) Remove the center planetary ring gear and front planetary ring gear flange from the front planetary ring gear.

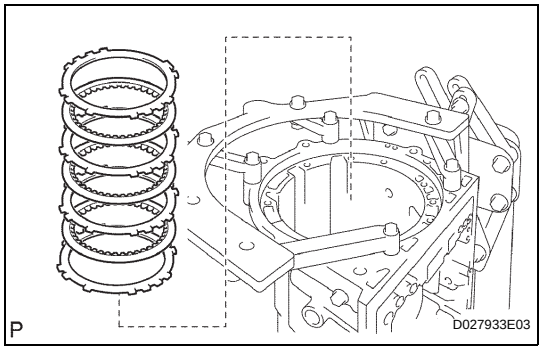

45. REMOVE NO. 1 BRAKE DISC

(a) Remove the flange, 3 discs and 3 plates from the case.

46. INSPECT NO. 1 BRAKE DISC (See page AT-213)

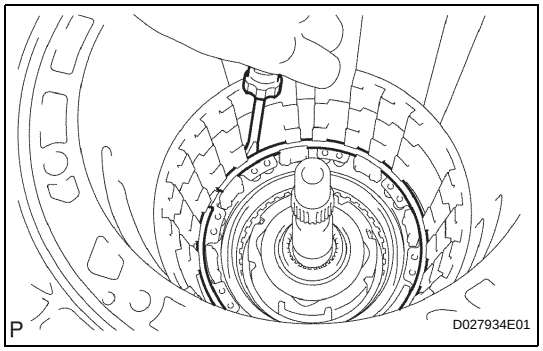

47. REMOVE BRAKE PISTON RETURN SPRING SNAP RING

(a) Using a screwdriver, remove the brake piston return spring snap ring from the case.

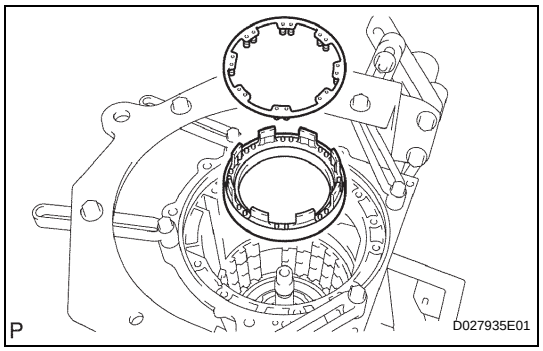

48. REMOVE BRAKE PISTON RETURN SPRING SUB-ASSEMBLY

(a) Remove the brake piston return spring and No. 1 brake piston with the No. 1 brake cylinder from the transmission case.

49. INSPECT BRAKE PISTON RETURN SPRING SUB-ASSEMBLY (See page AT-213)

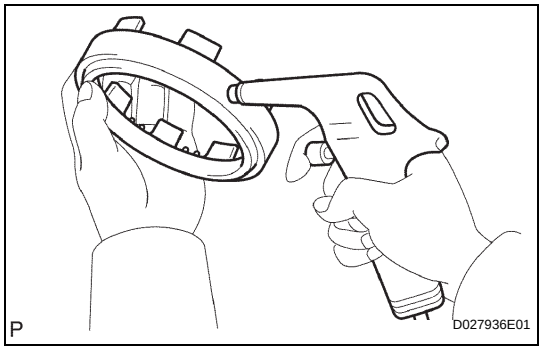

50. REMOVE NO. 1 BRAKE PISTON

(a) Hold the No. 1 brake piston and apply compressed air (392 kPa, 4 kgf/cm^2, 57 psi) to the transmission case to remove the No. 1 brake piston.
HINT:
If the piston does not pop out with compressed air, lift the piston out with needle-nose pliers.

(b) Remove the 2 O-rings from the No. 1 brake piston.

AT

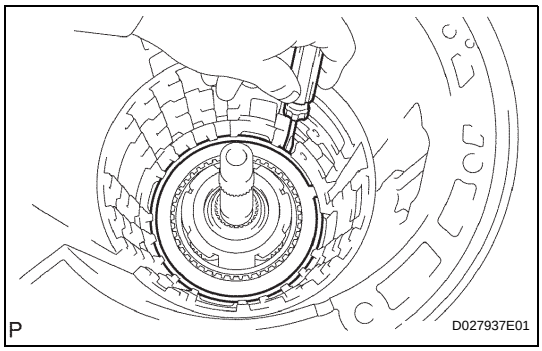

51. REMOVE NO. 2 BRAKE DISC

(a) Using a screwdriver, remove the snap ring from the case.

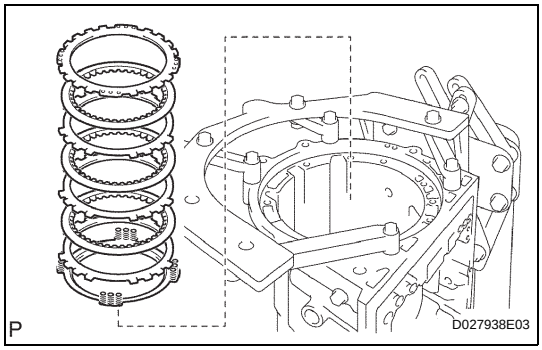

(b) Remove the flange, the brake piston return spring, the 3 discs and the 3 plates from the case.

52. INSPECT NO. 2 BRAKE DISC (See page AT-213)

53. INSPECT NO.2 BRAKE PISTON RETURN SPRING SUB-ASSEMBLY (See page AT-213)

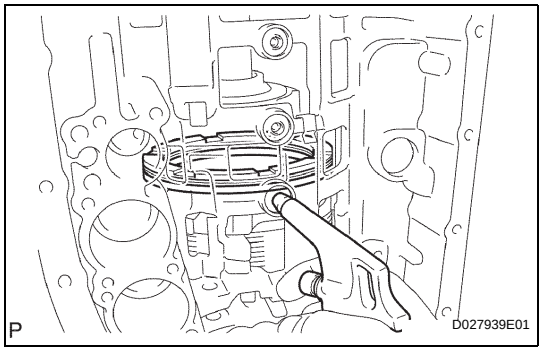

54. REMOVE NO. 2 BRAKE PISTON

(a) Hold the No. 2 brake piston and apply compressed air (392 kPa, 4 kgf/cm^2, 57 psi) to the transmission case to remove the No. 2 brake piston.
HINT:
If the piston does not pop out with compressed air, lift the piston out with needle-nose pliers.

(b) Remove the 2 O-rings from the No. 2 brake piston.

AT

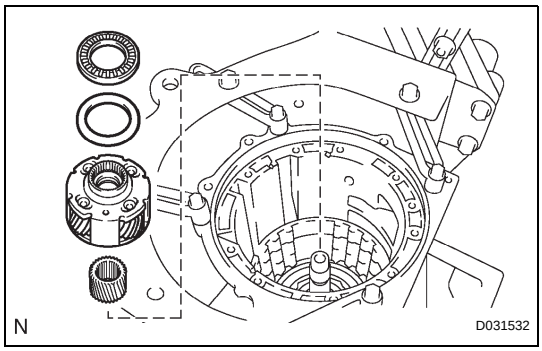

55. REMOVE CENTER PLANETARY GEAR ASSEMBLY

(a) Remove the center planetary gear assembly, planetary sun gear, thrust needle roller bearing and No. 4 thrust bearing race from the case.

56. INSPECT CENTER PLANETARY GEAR ASSEMBLY (See page AT-214)

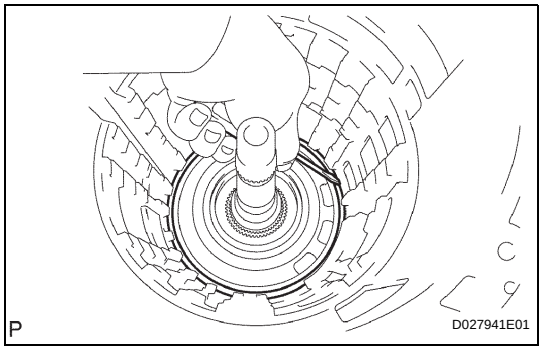

57. REMOVE INTERMEDIATE SHAFT

(a) Using a screwdriver, remove the snap ring from the case.

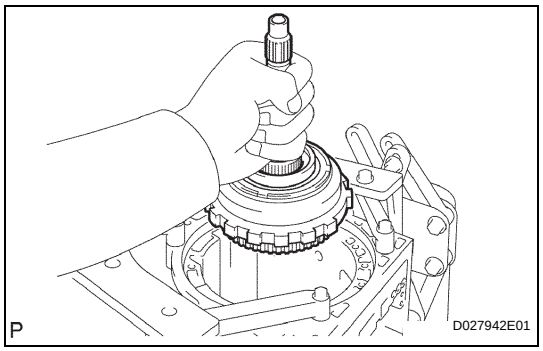

(b) Remove the intermediate shaft with the No. 3 1-way clutch assembly from the case.

58. INSPECT NO. 3 1-WAY CLUTCH ASSEMBLY (See page AT-214)

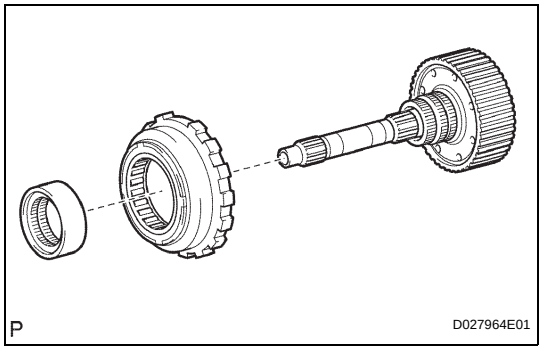

59. REMOVE NO. 3 1-WAY CLUTCH ASSEMBLY

(a) Remove the No. 3 1-way clutch assembly and 1-way clutch inner race from the intermediate shaft.

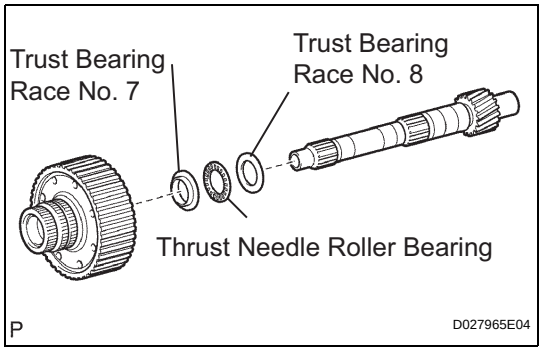

60. REMOVE REAR PLANETARY RING GEAR FLANGE SUB-ASSEMBLY

(a) Remove the No. 8 thrust bearing race, thrust needle roller bearing, No. 7 thrust bearing race and rear planetary ring gear flange from the intermediate shaft.

61. INSPECT REAR PLANETARY RING GEAR FLANGE SUB-ASSEMBLY (See page AT-214)

62. INSPECT INTERMEDIATE SHAFT (See page AT-214)

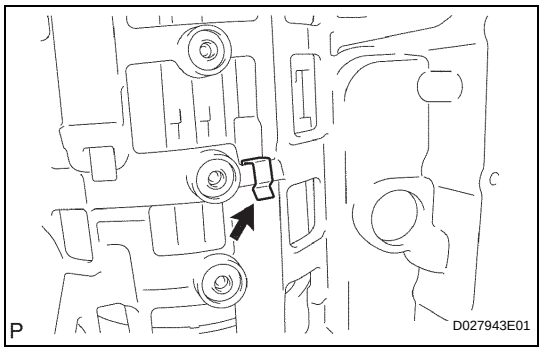

63. REMOVE BRAKE PLATE STOPPER SPRING

(a) Remove the brake plate stopper spring from the case.

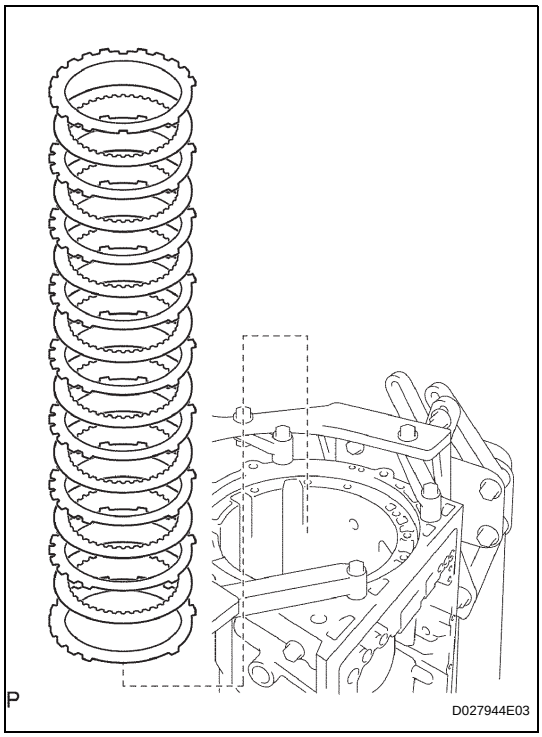

64. REMOVE NO. 4 BRAKE DISC

(a) Remove the 7 plates, the 8 discs and the 2 flanges from the case.

65. INSPECT NO. 4 BRAKE DISC (See page AT-215)

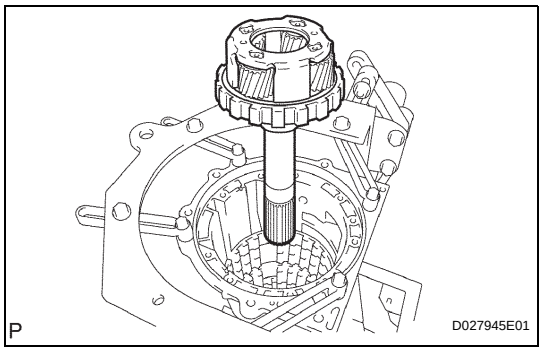

66. REMOVE REAR PLANETARY GEAR ASSEMBLY

(a) Remove the rear planetary gear assembly from the case.

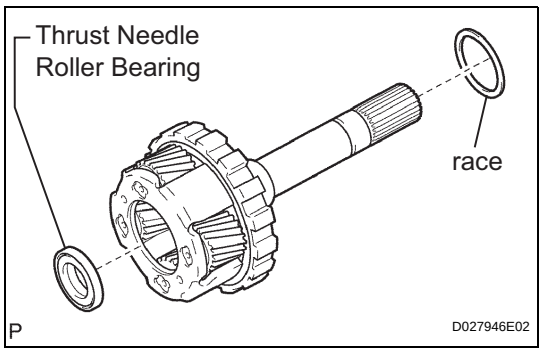

(b) Remove the No. 9 thrust bearing race and the thrust needle roller bearing from the rear planetary gear assembly.

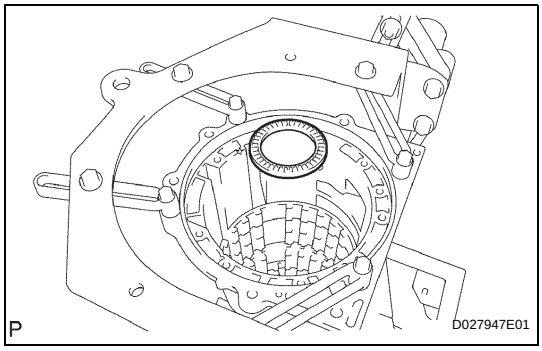

(c) Remove the thrust needle roller bearing from the case.

67. INSPECT REAR PLANETARY GEAR ASSEMBLY (See page AT-214)

AT

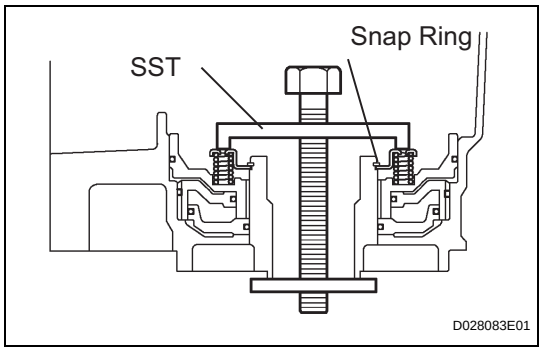

68. REMOVE 1ST AND REVERSE BRAKE RETURN SPRING SUB-ASSEMBLY

(a) Place SST on the spring retainer and compress the brake return spring.
SST 09350-30020 (09350-07050)

(b) Using SST, remove the snap ring and the 1st and reverse brake return spring.
SST 09350-30020 (09350-07070)

69. INSPECT 1ST AND REVERSE BRAKE RETURN SPRING SUB-ASSEMBLY (See page AT-216)

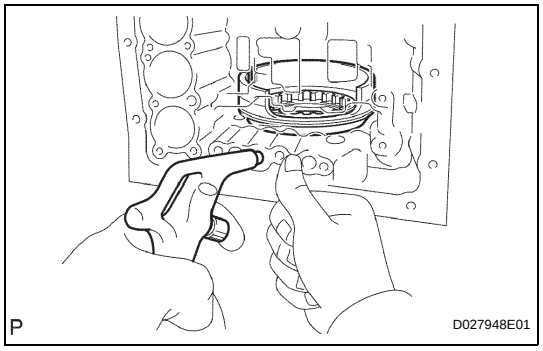

70. REMOVE 1ST AND REVERSE BRAKE PISTON

(a) Hold the 1st and reverse brake piston and apply compressed air (392 kkPa, 4 kgf/cm^2, 57 psi) to the transmission case to remove the 1st and reverse brake piston.
HINT:
If the piston does not pop out with compressed air, lift the piston out with needle-nose pliers.

(b) Remove the O-ring from the 1st and reverse brake piston.

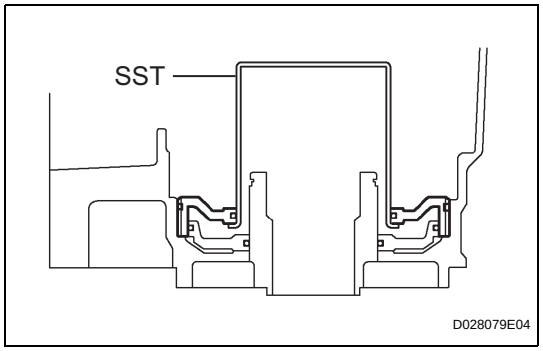

71. REMOVE BRAKE REACTION SLEEVE

(a) Using SST, remove the reaction sleeve.
SST 09350-30020 (09350-07080)

(b) Remove the 2 O-rings from the reaction sleeve.

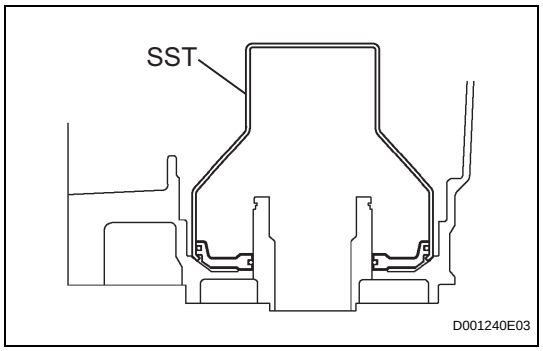

72. REMOVE NO. 4 BRAKE PISTON

(a) Using SST, remove the No. 4 brake piston.
SST 09350-30020 (09350-07090)

(b) Remove the 2 O-rings from the No. 4 piston.

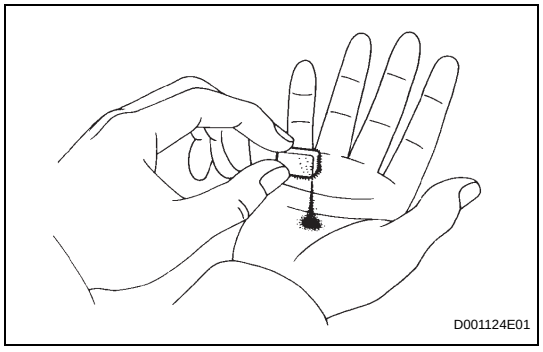

INSPECTION

1. INSPECT AUTOMATIC TRANSMISSION OIL PAN SUB-ASSEMBLY

(a) Remove the magnets, and use them to collect steel particles.

(b) Carefully look at the foreign matter and particles in the pan and on the magnets to anticipate the type of wear you will find in the transmission.
- Steel (magnetic): bearing, gear and clutch plate wear
- Brass (non-magnetic): bushing wear

AT

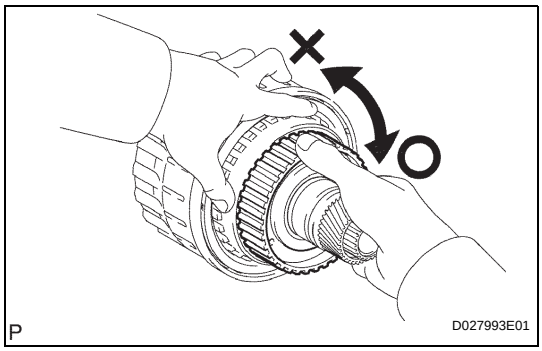

2. INSPECT NO. 2 1-WAY CLUTCH ASSEMBLY

(a) Hold the reverse clutch hub and turn the No. 2 1-way clutch assembly.

(b) Check that the No. 2 1-way clutch assembly turns freely clockwise and locks when turned counterclockwise.

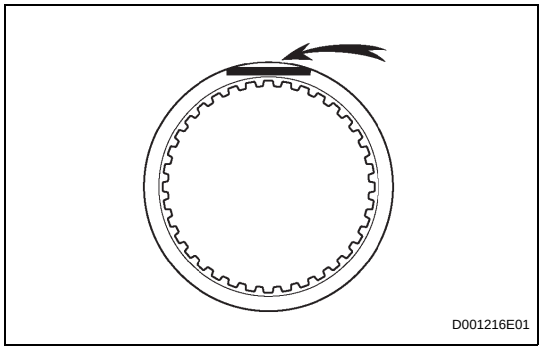

3. INSPECT NO. 3 BRAKE DISC

(a) Replace all discs if one of the following problems is present: 1) a disc, plate or flange is worn or burnt, 2) the lining of a disc is peeled off or discolored, or 3) grooves or printed numbers have even slight damage.

NOTICE:

Before assembling new discs, soak them in ATF for at least 15 minutes.

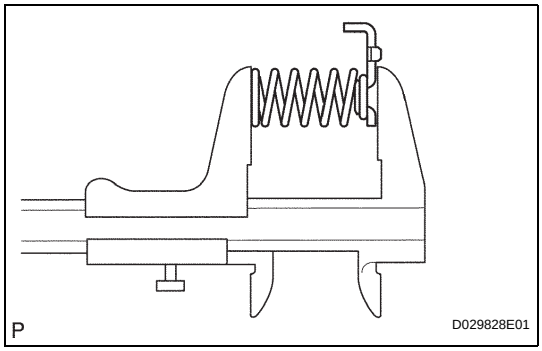

4. INSPECT NO. 3 BRAKE PISTON RETURN SPRING SUB-ASSEMBLY

(a) Using vernier calipers, measure the free length of the spring together with the spring seat.

Standard free length:

15.72 mm (0.619 in.)

AT

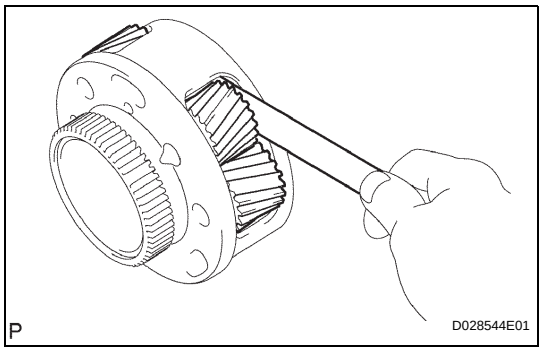

5. INSPECT FRONT PLANETARY GEAR ASSEMBLY

(a) Using a feeler gauge, measure the front planetary pinion gear thrust clearance.

Standard clearance:

0.2 to 0.60 mm (0.008 to 0.024 in.)

Maximum clearance:

0.65 mm (0.026 in.)

If the clearance is greater than the maximum, replace the front planetary gear assembly.

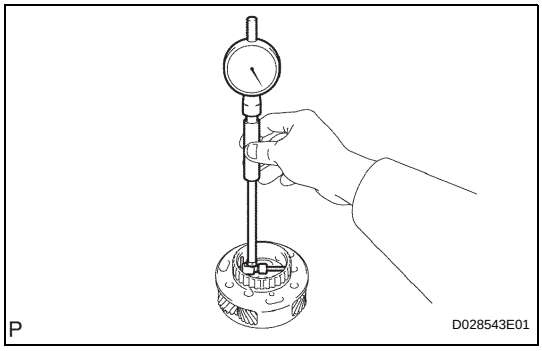

(b) Using a dial indicator, measure the inside diameter of the front planetary gear bushing.

Maximum inside diameter:

57.48 mm (2.263 in.)

If the inside diameter is greater than the maximum, replace the front planetary gear.

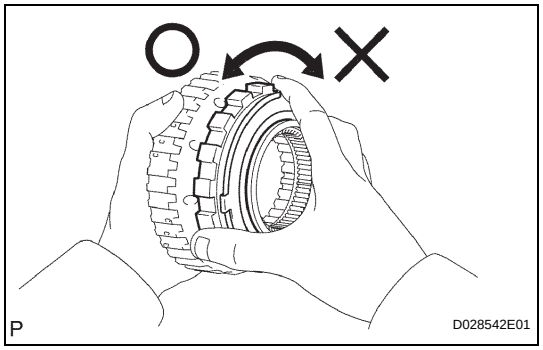

6. INSPECT 1-WAY CLUTCH ASSEMBLY

(a) Install the 1-way clutch assembly onto the 1-way clutch inner race.
(b) Hold the 1-way clutch inner race and turn the 1-way clutch assembly.
(c) Check that the 1-way clutch assembly turns freely counterclockwise and locks when turned clockwise.
(d) Remove the 1-way clutch assembly from the 1-way clutch inner race.

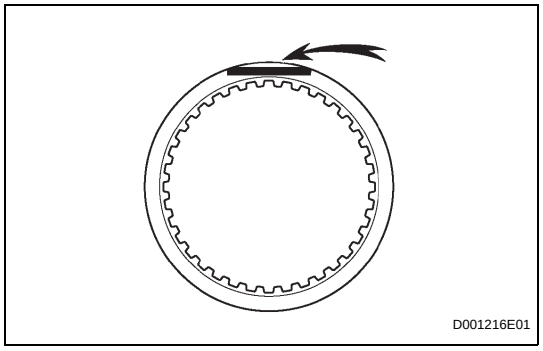

7. INSPECT NO. 1 BRAKE DISC

(a) Replace all discs if one of the following problems is present: 1) a disc, plate or flange is worn or burnt, 2) the lining of a disc is peeled off or discolored, or 3) grooves or printed numbers have even slight damage.
NOTICE:
Before assembling new discs, soak them in ATF for at least 15 minutes.

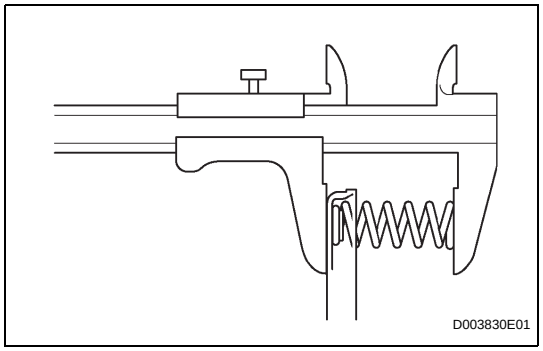

8. INSPECT BRAKE PISTON RETURN SPRING SUB-ASSEMBLY

(a) Using vernier calipers, measure the free length of the spring together with the spring seat.
Standard free length:
17.05 mm (0.671 in.)

AT

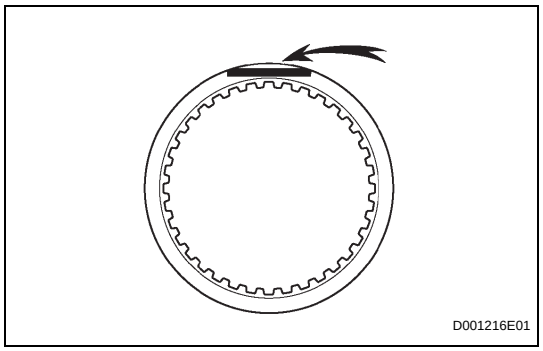

9. INSPECT NO. 2 BRAKE DISC

(a) Replace all discs if one of the following problems is present: 1) a disc, plate or flange is worn or burnt, 2) the lining of a disc is peeled off or discolored, or 3) grooves or printed numbers have even slight damage.
NOTICE:
Before assembling new discs, soak them in ATF for at least 15 minutes.

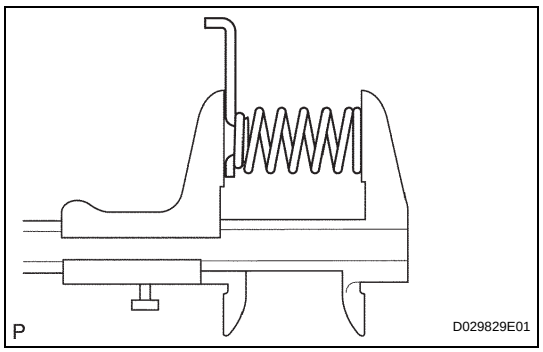

10. INSPECT NO. 2 BRAKE PISTON RETURN SPRING SUB-ASSEMBLY

(a) Using vernier calipers, measure the free length of the spring together with the spring seat.
Standard free length:
17.45 mm (0.687 in.)

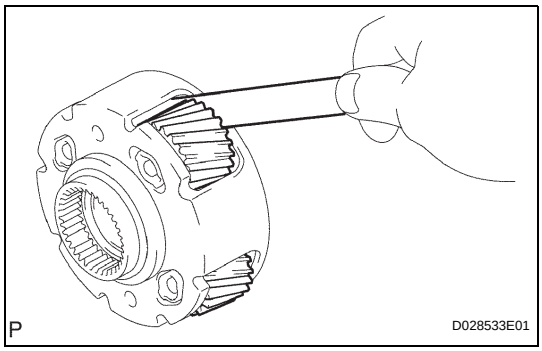

11. INSPECT CENTER PLANETARY GEAR ASSEMBLY

(a) Using a feeler gauge, measure the center planetary gear pinion thrust clearance.

Standard clearance:
0.12 to 0.68 mm (0.005 to 0.027 in.)
Maximum clearance:
0.73 mm (0.029 in.)

If the clearance is greater than the maximum, replace the center planetary gear assembly.

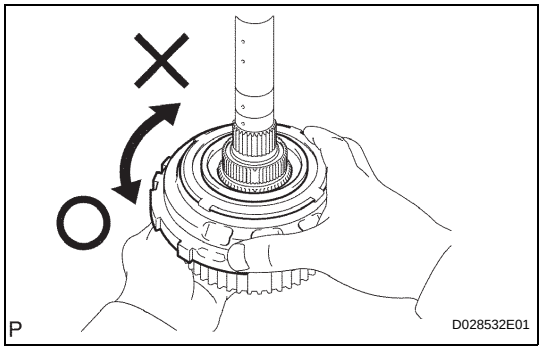

12. INSPECT NO. 3 1-WAY CLUTCH ASSEMBLY

(a) Hold the rear planetary ring gear flange sub-assembly, and turn the 1-way clutch assembly.

(b) Check that the 1-way clutch assembly turns freely counterclockwise and locks when turned clockwise.

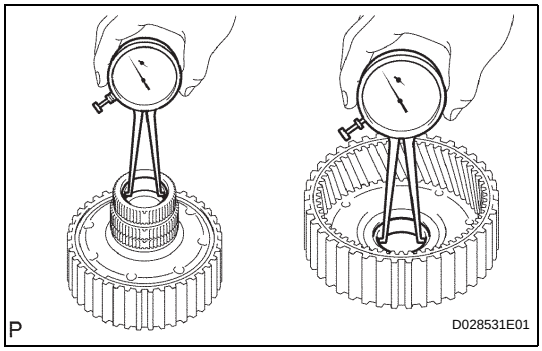

13. INSPECT REAR PLANETARY RING GEAR FLANGE SUB-ASSEMBLY

(a) Using a dial indicator, measure the inside diameter of the rear planetary ring gear bushing.

Maximum inside diameter:
32.18 mm (1.2667 in.)

If the inside diameter is greater than the maximum, replace the rear planetary ring gear.

AT

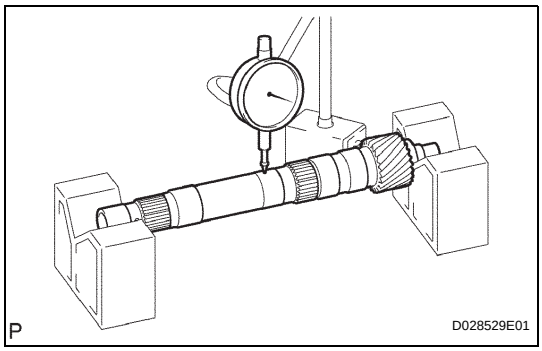

14. INSPECT INTERMEDIATE SHAFT

(a) Using a dial indicator, check the intermediate shaft runout.

Maximum runout:
0.08 mm (0.003 in.)
NOTICE:
If the bend exceeds the specification, replace the intermediate shaft with a new one.

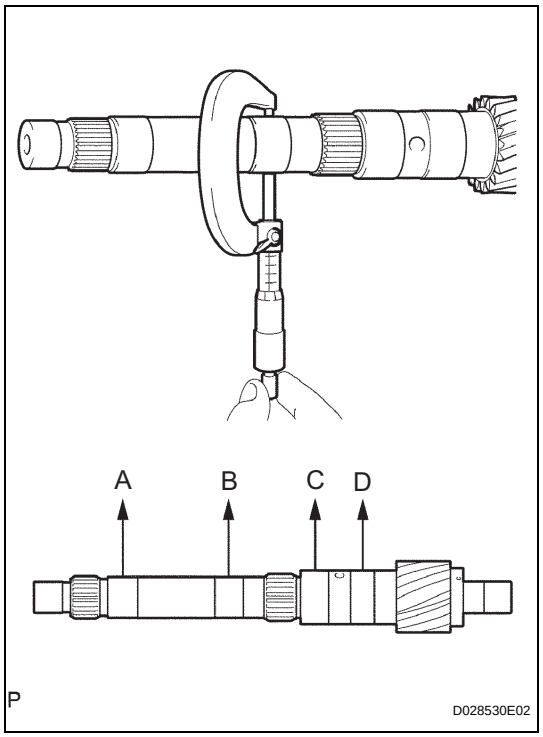

(b) Using a micrometer, check the outer diameter of the intermediate shaft positions shown in the diagram.

Standard diameter:

A:

25.962 to 25.975 mm (1.022 to 1.023 in.)

B:

25.962 to 25.975 mm (1.022 to 1.023 in.)

C:

32.062 to 32.075 mm (1.262 to 1.263 in.)

D:

32.062 to 32.075 mm (1.262 to 1.263 in.)

Minimum diameter:

A:

25.912 mm (1.020 in.)

B:

25.912 mm (1.020in.)

C:

32.012 mm (1.260 in.)

D:

32.012 mm (1.260 in.)

NOTICE:

If the outer diameter is outside the standard, replace the intermediate shaft with a new one.

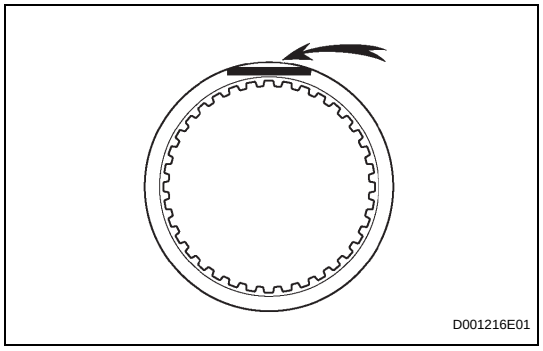

15. INSPECT NO. 4 BRAKE DISC

(a) Replace all discs if one of the following problems is present: 1) a disc, plate or flange is worn or burnt, 2) the lining of a disc is peeled off or discolored, or 3) grooves or printed numbers have even slight damage.

NOTICE:

Before assembling new discs, soak them in ATF for at least 15 minutes.

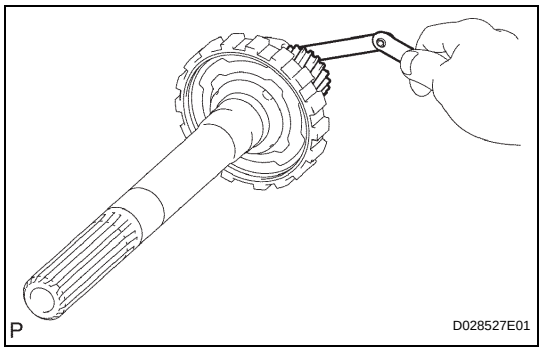

16. INSPECT REAR PLANETARY GEAR ASSEMBLY

(a) Using a feeler gauge, measure the rear planetary gear pinion thrust clearance.

Standard clearance:

0.2 to 0.6 mm (0.008 to 0.024 in.)

Maximum clearance:

0.65 mm (0.026 in.)

If the clearance is greater than the maximum, replace the planetary gear assembly.

AT

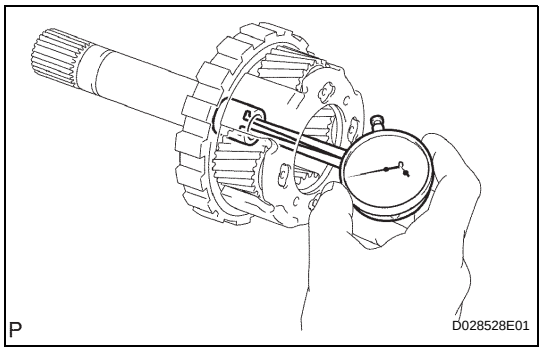

(b) Using a dial indicator, measure the inside diameter of the rear planetary gear bushing.
Maximum inside diameter:
20.075 mm (0.7904 in.)
If the inside diameter is greater than the maximum, replace the rear planetary gear assembly.

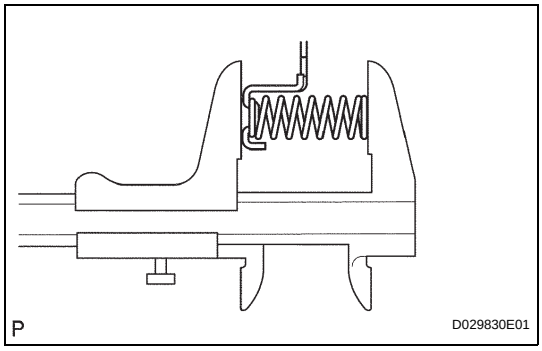

17. INSPECT 1ST AND REVERSE BRAKE RETURN SPRING SUB-ASSEMBLY

(a) Using vernier calipers, measure the free length of the spring together with the spring seat.
Standard free length:
23.74 mm (0.9347 in.)

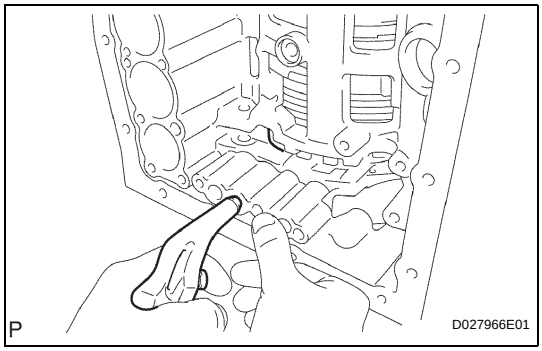

18. INSPECT PACK CLEARANCE OF FIRST AND REVERSE BRAKE

(a) Make sure the 1st and reverse brake pistons move smoothly when applying and releasing the compressed air into the transmission case.

AT

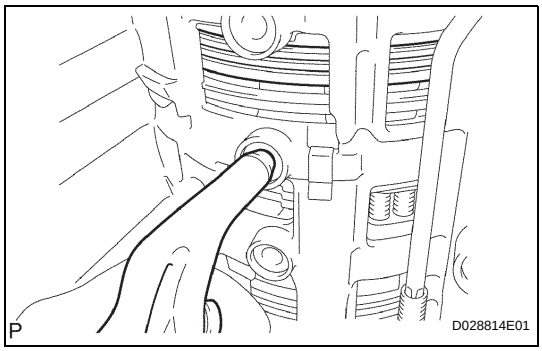

19. INSPECT NO. 1 PISTON STROKE OF BRAKE PISTON

(a) Make sure the No. 1 brake piston moves smoothly when applying and releasing the compressed air into the transmission case.

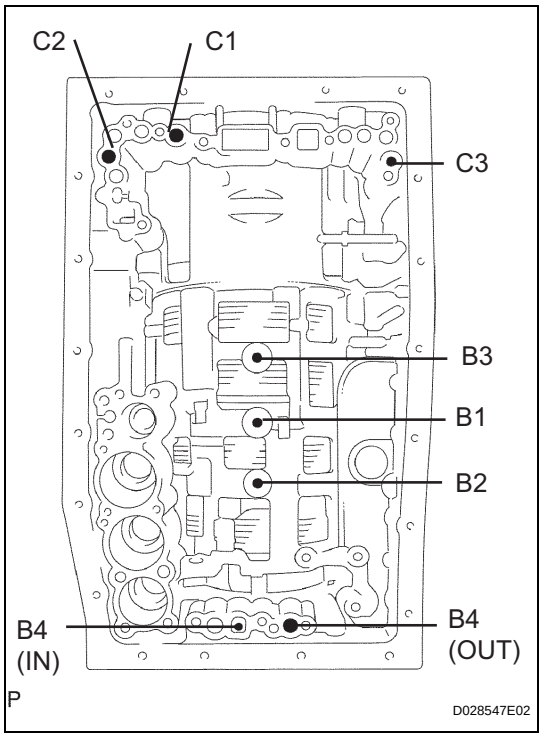

20. INSPECT INDIVIDUAL PISTON OPERATION
INSPECTION

(a) Check the operating sound while applying compressed air into the oil holes indicated in the illustration.

HINT:

When inspecting the O/D direct clutch, use the C3 accumulator piston holes indicated in the illustration. If there is no sound, disassemble and check the installation condition of the parts.

(1) No. 2 clutch (C2)
(2) No. 3 clutch (C3)
(3) No. 1 clutch (C1)
(4) No. 3 brake (B3)
(5) No. 1 brake (B1)
(6) No. 2 brake (B2)
(7) No. 4 brake (B4)

REASSEMBLY

1. BEARING POSITION

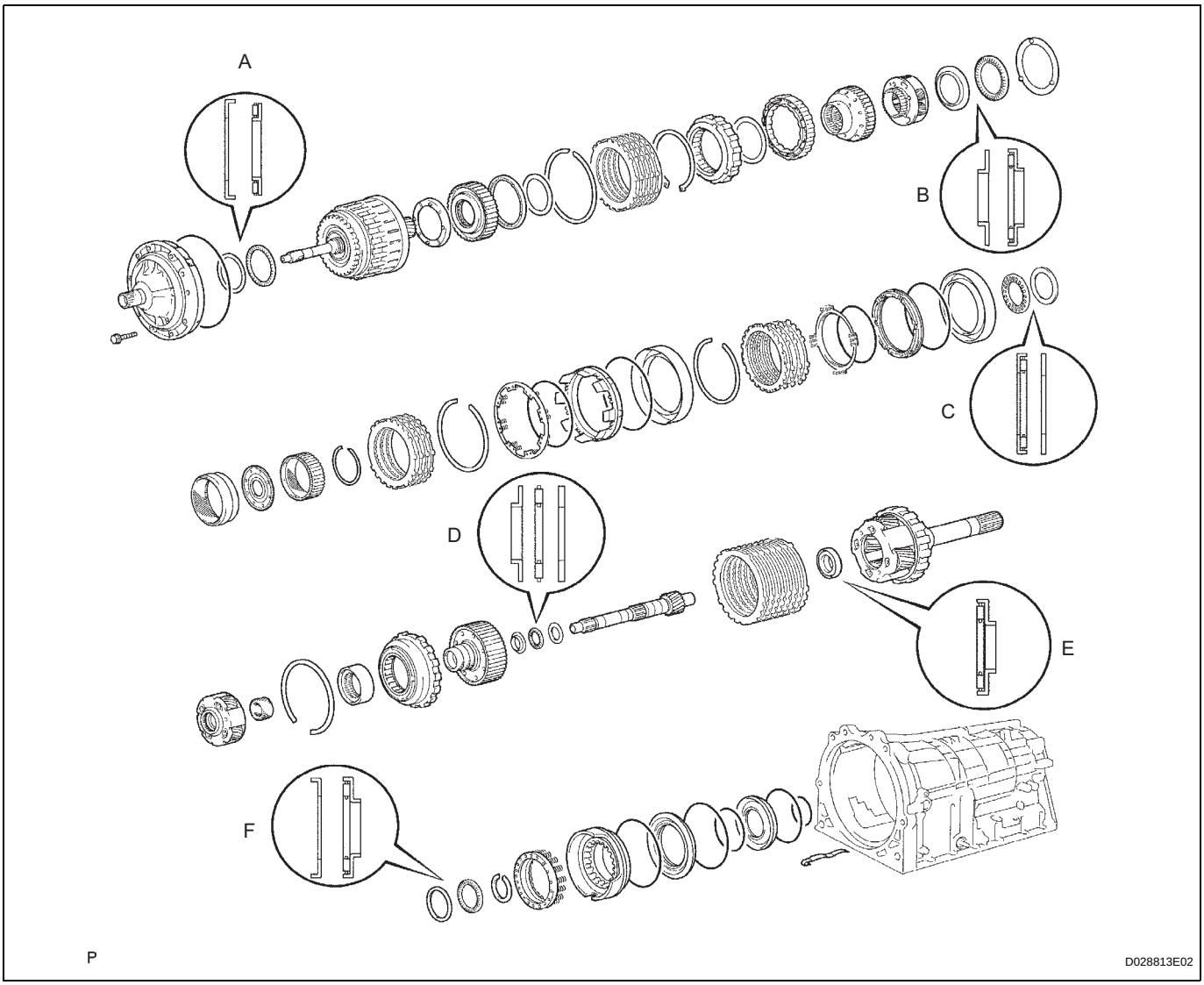

AT

Bearing diameter

Mark	Front Race Diameter Inside / Outside	Thrust Bearing Diameter Inside / Outside	Rear Race Diameter Inside / Outside
A	73.6 mm (2.898 in.) / 102.0 mm (4.016 in.)	71.9 mm (2.831 in.) / 85.6 mm (3.370 in.)	-
B	38.0 mm (1.496 in.) / 57.0 mm (2.244 in.)	43.4 mm (1.709 in.) / 58.3 mm (2.295 in.)	-
C	-	55.7 mm (2.193 in.) / 76.4 mm (3.008 in.)	53.7 mm (2.114 in.) / 74.0 mm (2.913 in.)
D	33.4 mm (1.315 in.) / 49.0 mm (1.929 in.)	32.1 mm (1.264 in.) / 49.35 mm (1.943 in.)	32.1 mm (1.2649 in.)/ 49.0 mm (1.929 in.)
E	-	21.5 mm(0.847 in.) / 40.8 mm (1.606 in.)	-
F	48.5 mm (1.909 in.) / 62.7 mm (2.469 in.)	45.9 mm (1.807 in.) / 64.0 mm (2.520 in.)	-

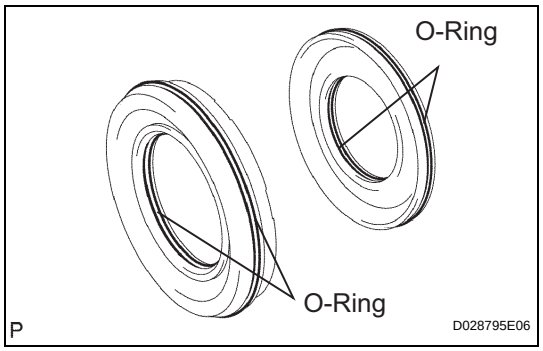

2. INSTALL NO. 4 BRAKE PISTON

(a) Coat 2 new O-rings with ATF, and install them onto the brake reaction sleeve.

(b) Coat 2 new O-rings with ATF, and install them onto the No. 4 brake piston.

(c) Install the No. 4 brake piston onto the reaction sleeve.

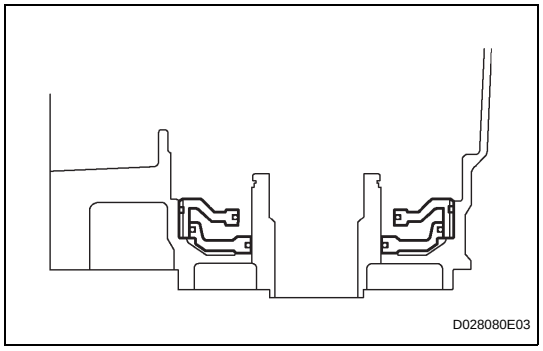

3. INSTALL BRAKE REACTION SLEEVE

(a) With the No. 4 brake piston underneath (the rear side), install the brake reaction sleeve and No. 4 brake piston onto the transmission case.

NOTICE:

Be careful not to damage the O-rings.

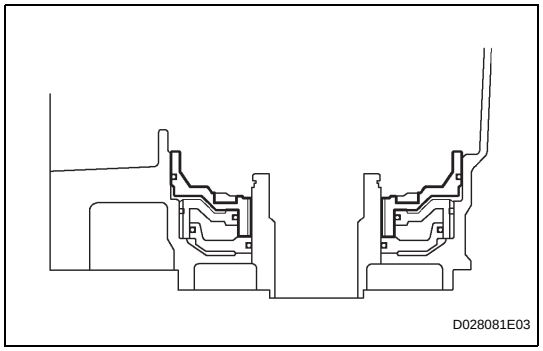

4. INSTALL 1ST AND REVERSE BRAKE PISTON

(a) Coat a new O-ring with ATF.

(b) Install the O-ring onto the 1st and reverse brake piston.

(c) With the spring seat of the piston facing upward (the front side), place the piston in the transmission case.

NOTICE:

Be careful not to damage the O-ring.

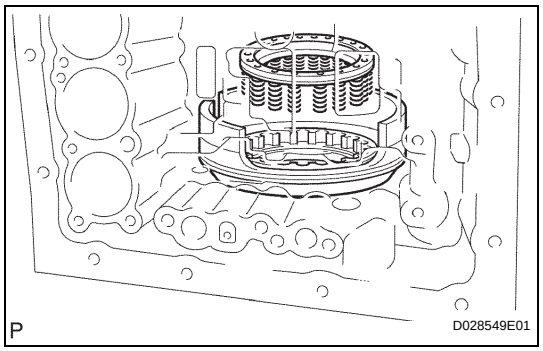

(d) Place the 1st and reverse brake return spring onto the 1st and reverse brake piston.

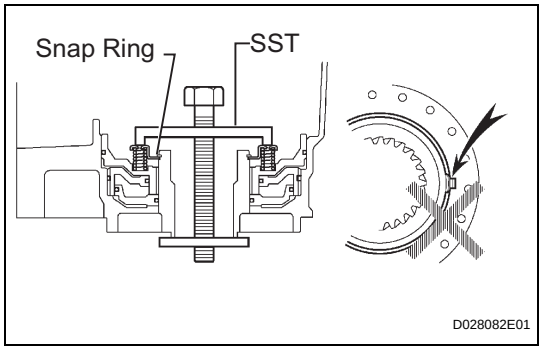

5. INSTALL 1ST AND REVERSE BRAKE RETURN SPRING SUB-ASSEMBLY

(a) Place SST on the spring retainer, and compress the return spring.

SST 09350-30020 (09350-07050)

(b) Using SST, install the snap ring.

SST 09350-30020 (09350-07070)

AT

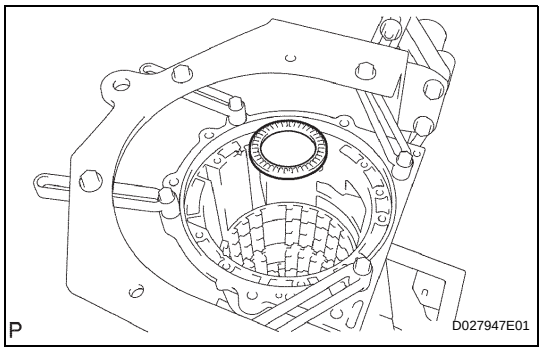

6. INSTALL REAR PLANETARY GEAR ASSEMBLY

(a) Install the thrust needle roller bearing.

Thrust needle roller bearing diameter

Item	Inside	Outside
Thrust needle roller bearing	45.9 mm (1.807 in.)	64.0 mm (2.520 in.)

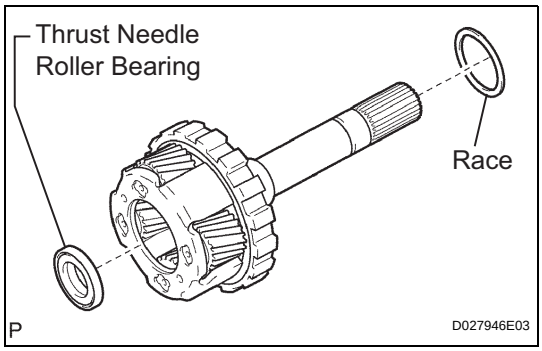

(b) Install the thrust needle roller bearing.

(c) Coat the No. 9 thrust bearing race with petroleum jelly, and install it onto the rear planetary gear.

Bearing and race diameter

Item	Inside	Outside
Bearing	21.5 mm (0.847 in.)	40.8 mm (1.606 in.)
Race	48.5 mm (1.909 in.)	62.7 mm (2.469 in.)

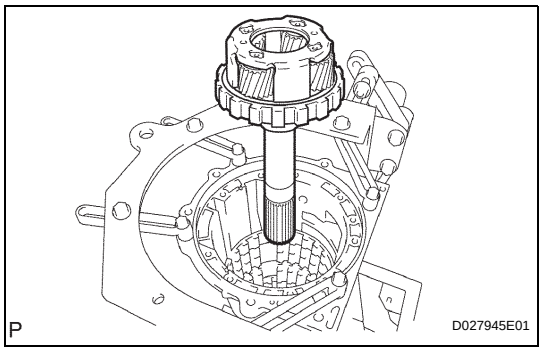

(d) Install the rear planetary gear assembly.

AT

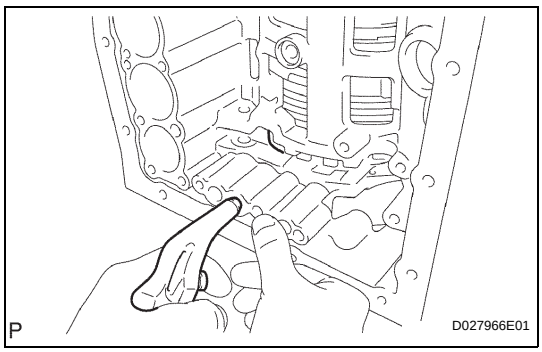

7. INSPECT PACK CLEARANCE OF FIRST AND REVERSE BRAKE

(a) Make sure the 1st and reverse brake pistons move smoothly when applying and releasing the compressed air into the transmission case.

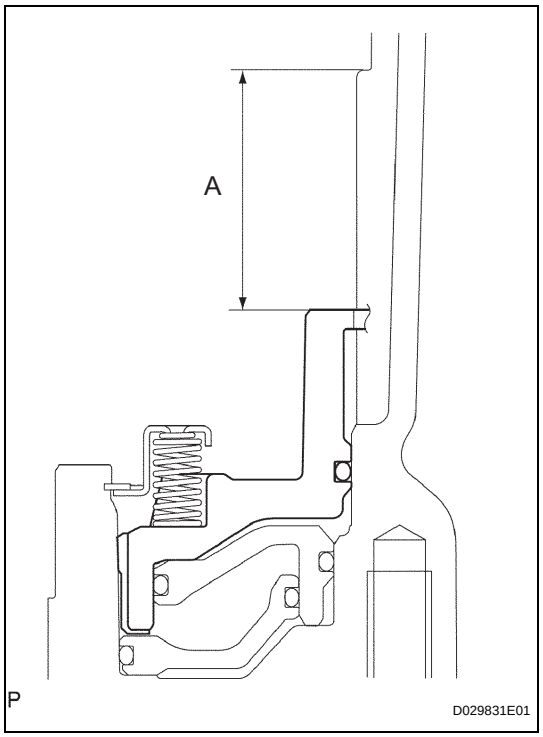

(b) Using vernier calipers, measure the level difference (length A) between the upper surface of the 1st and reverse brake piston and the hitting surface of the No. 4 brake flange at both ends across a diameter, and calculate the average.

NOTICE:

The 1st and reverse brake piston must be installed tightly to the end face of the transmission case.

HINT:

Length A = 36.35 to 37.09 mm (1.431 to 1.460 in.)

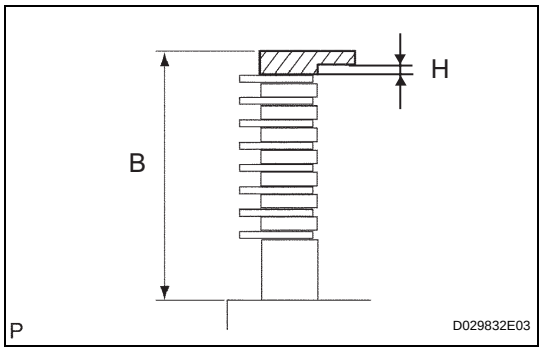

(c) Using vernier calipers, measure the thickness (length B) of the 2 brake flanges, the 7 No. 4 brake plates and the 8 No. 4 brake discs altogether at both ends across a diameter, and calculate the average.

HINT:

Pack clearance = Length A - Length B - 0.25 mm - 1.8 mm

Length B = 36.04 to 37.14 mm (1.419 to 1.462 in.)

Pack clearance:

0.8 to 1.1 mm (0.031 to 0.043 in.)

(d) If the pack clearance is outside the standard, select and install a brake flange that makes the pack clearance within the standard.

H thickness

No.	Thickness	No.	Thickness
0	0 mm (0 in.)	8	0.8 mm (0.031 in.)
2	0.2 mm(0.008 in.)	10	1.0 mm (0.039 in.)
4	0.4 mm (0.016 in.)	12	1.2 mm (0.047 in.)
6	0.6 mm (0.024 in.)	14	1.4 mm (0.055 in.)

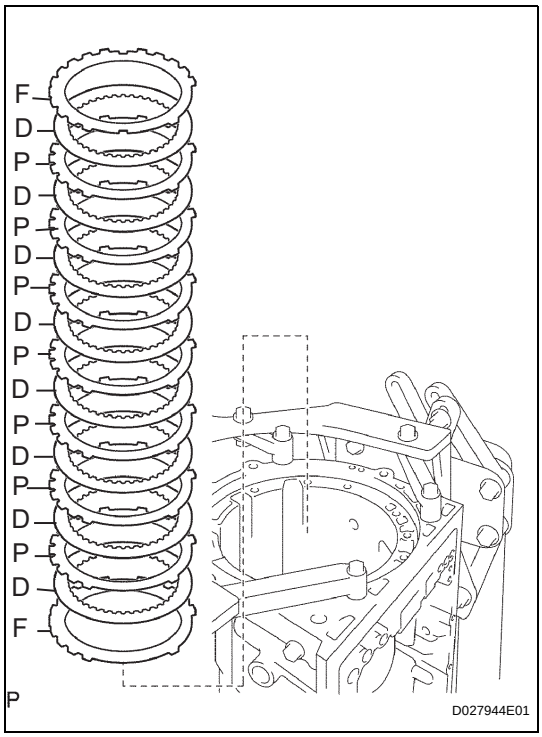

8. INSTALL NO. 4 BRAKE DISC

(a) Install the 7 plates, the 8 discs and the 2 flanges.

Install in order:

F - D - P - D - P - D- P - D -P - D - P - D - P - D - P - D - F

HINT:

P = Plate, D = Disc, F = Flange

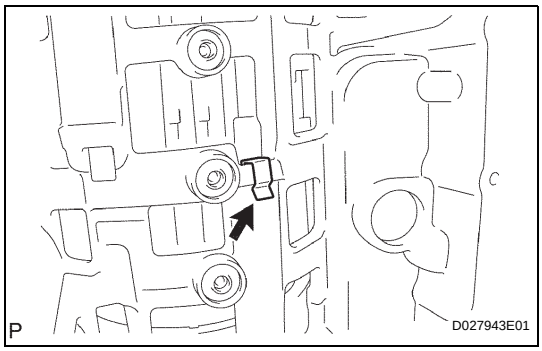

9. INSTALL BRAKE PLATE STOPPER SPRING

(a) Install the brake stopper spring.

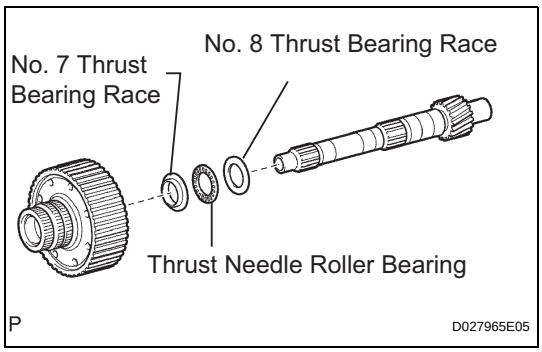

10. INSTALL REAR PLANETARY RING GEAR FLANGE SUB-ASSEMBLY

(a) Install the No. 8 thrust bearing race, thrust needle roller bearing, No. 7 thrust bearing race and planetary ring gear flange onto the intermediate shaft.

Bearing and race diameter

Item	Inside	Outside
No. 7 thrust bearing race	33.4 mm (1.315 in.)	49.0 mm (1.929 in.)
Thrust needle roller bearing	32.1 mm (1.264 in.)	49.35 mm (1.943 in.)
No. 8 thrust bearing race	32.1 mm (1.264 in.)	49.0 mm (1.929 in.)

(b) Install the rear planetary ring gear flange onto the intermediate shaft.

AT

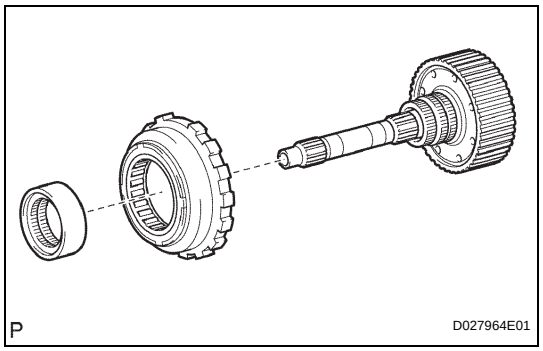

11. INSTALL NO. 3 1-WAY CLUTCH ASSEMBLY

(a) Install the No. 3 1-way clutch assembly and 1-way clutch inner race onto the intermediate shaft.

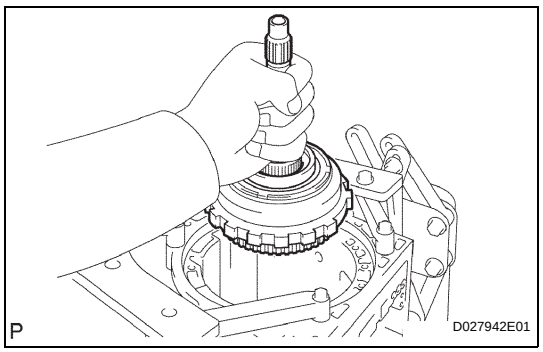

12. INSTALL INTERMEDIATE SHAFT

(a) Install the intermediate shaft with the No. 3 1-way clutch assembly into the case.

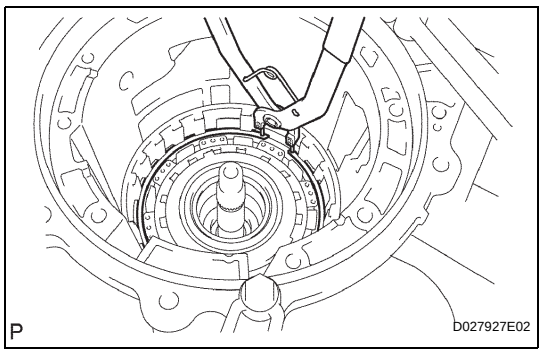

(b) Using SST, install the snap ring.
SST 09350-30020 (09350-07050, 09350-07060)

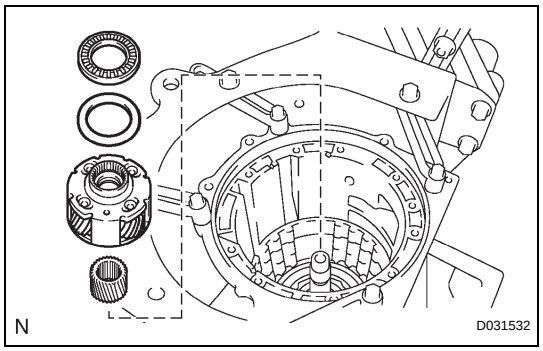

13. INSTALL CENTER PLANETARY GEAR ASSEMBLY

(a) Install the center planetary gear assembly and planetary sun gear into the case.

(b) Coat the No. 4 thrust bearing race and thrust needle roller bearing with petroleum jelly, and install them onto the center planetary ring gear.
Race and Bearing diameter

Item	Inside	Outside
Race	53.7 mm (2.114 in.)	74.0 m (2.913 in.)
Bearing	55.7 mm (2.192 in.)	76.4 mm (3.008 in.)

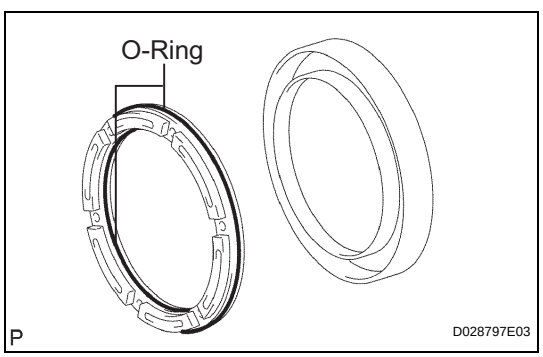

14. INSTALL NO. 2 BRAKE PISTON

(a) Coat 2 new O-rings with ATF, and install them onto the No. 2 brake piston.

(b) Be careful not to damage the O-rings. Press the No. 2 brake piston into the No. 2 brake cylinder with both hands.

(c) Install the No. 2 brake piston onto the case.

AT

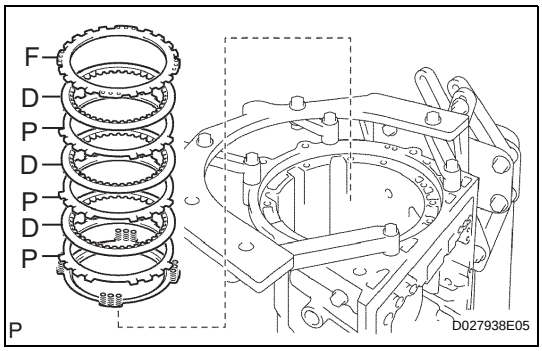

15. INSTALL NO. 2 BRAKE DISC

(a) Install flange, 3 plates, 3 discs and No. 2 brake piston return spring.
Install in order:
F - D - P - D - P - D - P
HINT:
P = Plate, D = Disc, F = Flange

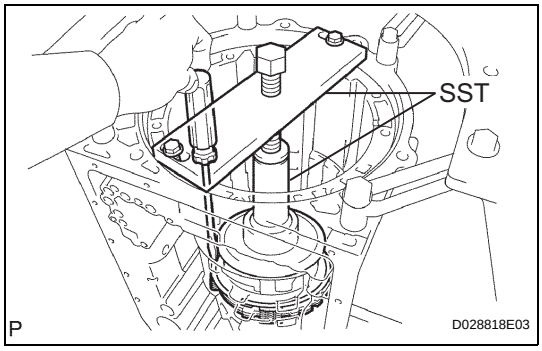

(b) Using SST and press, install the No. 2 brake spring snap ring.
SST 09351-40010

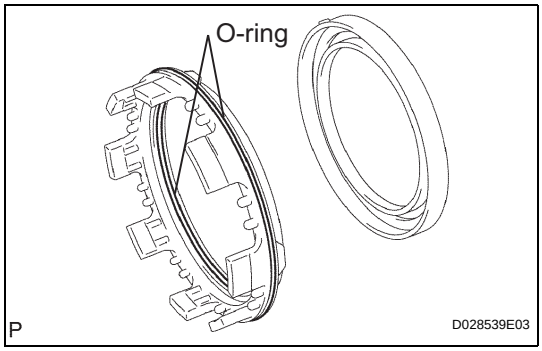

16. INSTALL NO. 1 BRAKE PISTON

(a) Coat 2 new O-rings with ATF, and install them onto the No. 1 brake piston.
(b) Be careful not to damage the O-rings. Press the No. 1 brake piston into the No. 1 brake cylinder with both hands.

AT

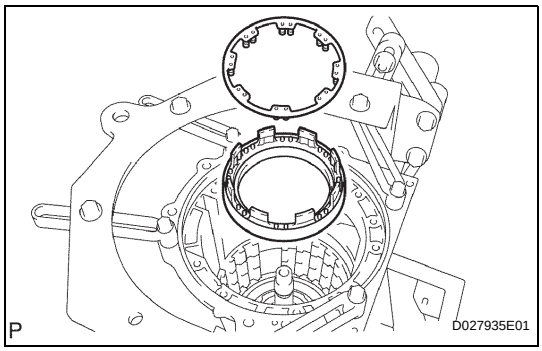

17. INSTALL BRAKE PISTON RETURN SPRING SUB-ASSEMBLY

(a) Install the brake piston return spring and the No. 1 brake piston with the No. 1 brake cylinder into the transmission case.

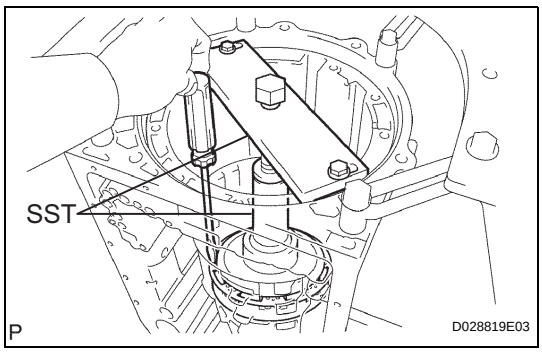

18. INSTALL BRAKE PISTON RETURN SPRING SNAP RING

(a) Using SST and a press, install the brake piston return spring snap ring.
SST 09351-40010

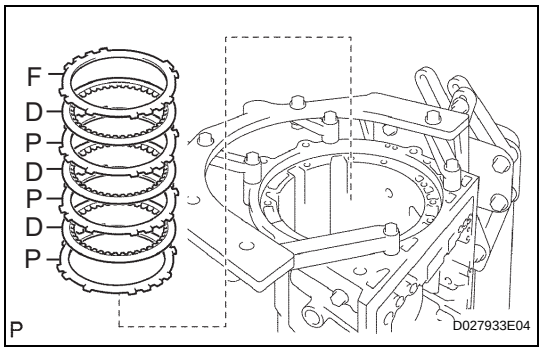

19. INSTALL NO. 1 BRAKE DISC

(a) Install the 3 plates, 3 discs and flange.
Install in order:
F - D - P - D - P - D - P
HINT:
P = Plate, D = Disc, F = Flange

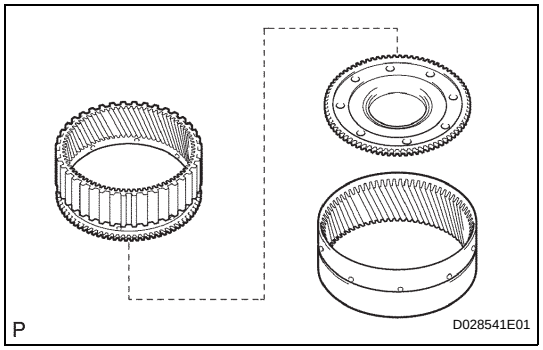

20. INSTALL CENTER PLANETARY RING GEAR

(a) Install the center planetary ring gear and front planetary ring gear flange into the front planetary ring gear.

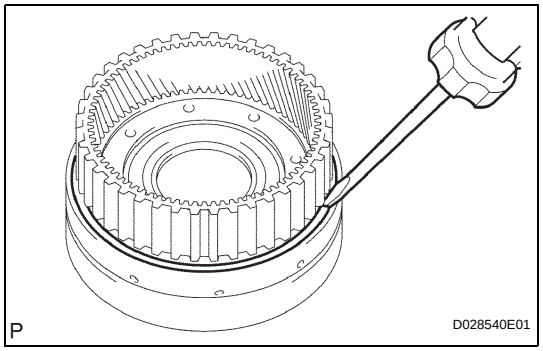

(b) Using a screwdriver, install the snap ring.

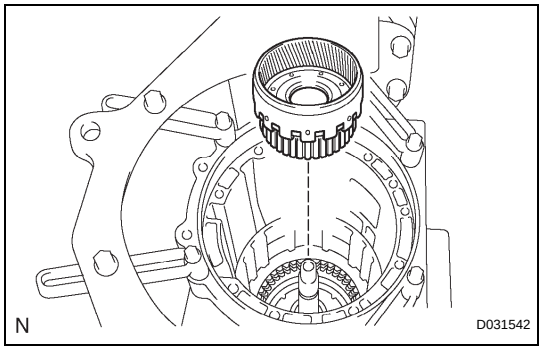

21. INSTALL FRONT PLANETARY RING GEAR

(a) Install the front planetary ring gear into the case.

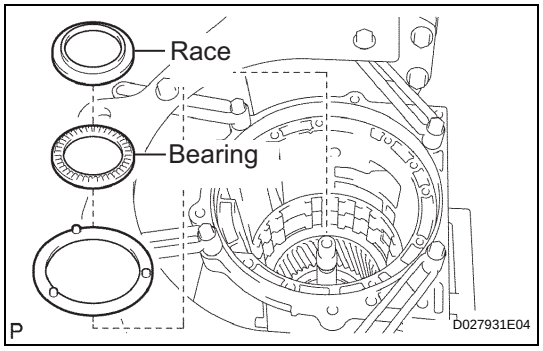

22. INSTALL FRONT PLANETARY GEAR ASSEMBLY

(a) Install the thrust needle roller bearing and the No. 2 planetary carrier thrust washer.

(b) Coat the No. 3 thrust bearing race with petroleum jelly, and install it onto the front planetary ring gear.
Thrust needle roller bearing and race diameter

Item	Inside	Outside
Thrust needle roller bearing	43.4 mm (1.709 in.)	58.3 mm (2.295 in.)
Race	38.0 mm (1.496 in.)	57.0 mm (2.244 in.)

AT

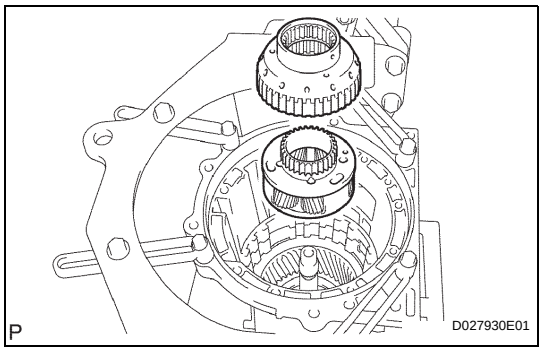

(c) Install the front planetary gear assembly and 1-way clutch inner race into the case.

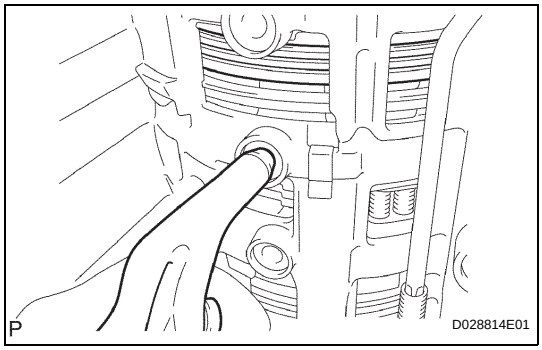

23. INSPECT NO. 1 PISTON STROKE OF BRAKE PISTON

(a) Make sure the No. 1 brake piston moves smoothly when applying and releasing the compressed air into the transmission case.

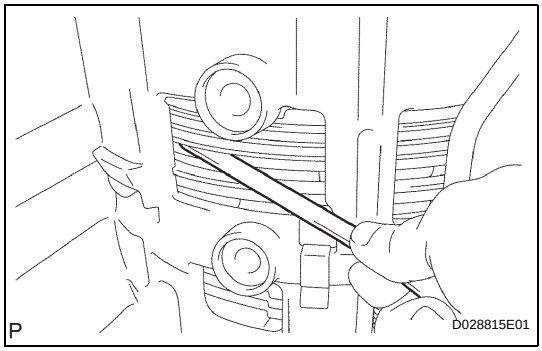

(b) Using a feeler gauge, measure the B3 brake pack clearance between the snap ring and flange.
Piston stroke:
0.42 to 0.72 mm (0.017 to 0.028 in.)
If the piston stroke is outside the specification, parts may have been assembled incorrectly.
Perform the reassembly again.
If the piston stroke is still outside the specification, select another flange.
HINT:
There are 4 different thicknesses for the flange.
Flange thickness

No.	Thickness	No.	Thickness
0	2.0 mm (0.079 in.)	2	2.4 mm (0.094 in.)
1	2.2 mm (0.087 in.)	3	2.6 mm (0.102 in.)

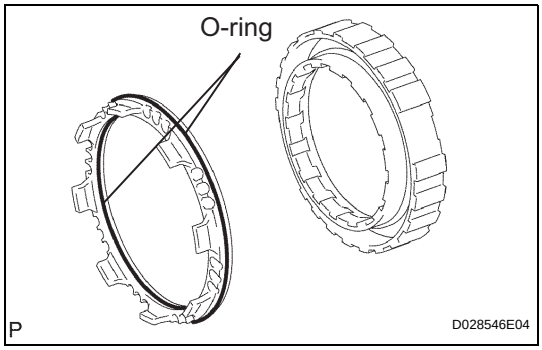

24. INSTALL 2ND BRAKE PISTON

(a) Coat 2 new O-rings with ATF, and install them onto the 2nd brake piston.

(b) Be careful not to damage the O-rings. Press the 2nd brake cylinder into the 2nd brake piston with both hands.

AT

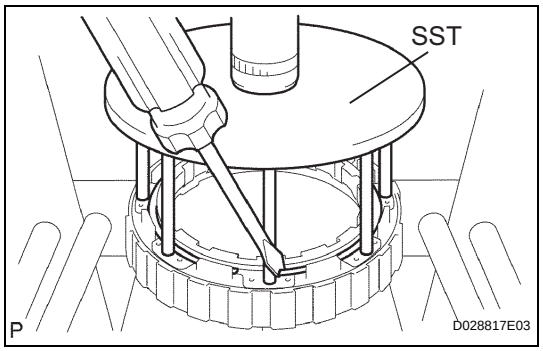

(c) Using SST and press, install the snap ring.
SST 09351-40010
NOTICE:
Make sure that the end gap of the snap ring is not aligned with the spring retainer claw.

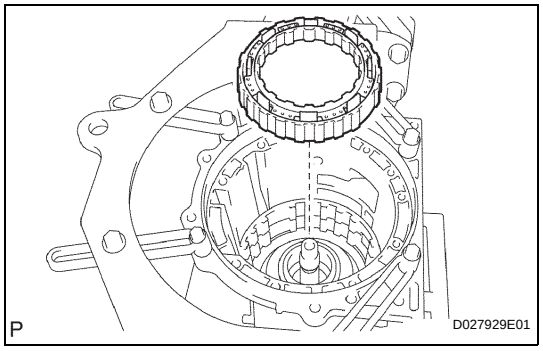

25. INSTALL 2ND BRAKE CYLINDER
(a) Install the 2nd brake cylinder into the case.

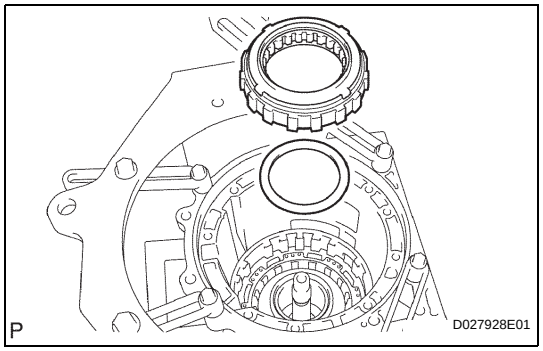

26. INSTALL 1-WAY CLUTCH ASSEMBLY
(a) Install the 1-way clutch assembly and the thrust washer into the case.

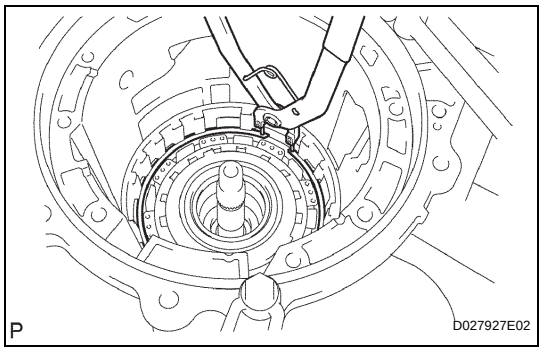

27. INSTALL 2ND BRAKE PISTON HOLE SNAP RING
(a) Using SST, install the snap ring.
SST 09350-30020 (09350-07060)

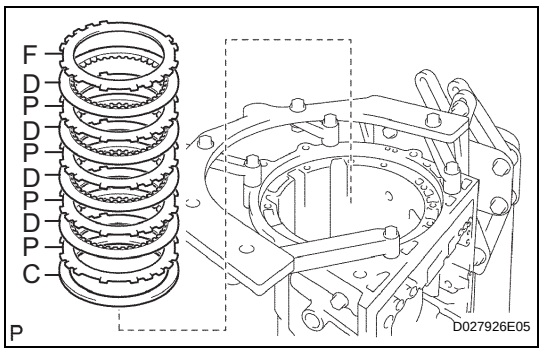

28. INSTALL NO. 3 BRAKE DISC
(a) Install the flange, the 4 discs, the 4 plates and the cushion plate into the case.
Install in order:
F - D - P - D - P - D - P - D - P - C
HINT:
P = Plate, D = Disc, F = Flange C = Cushion

AT

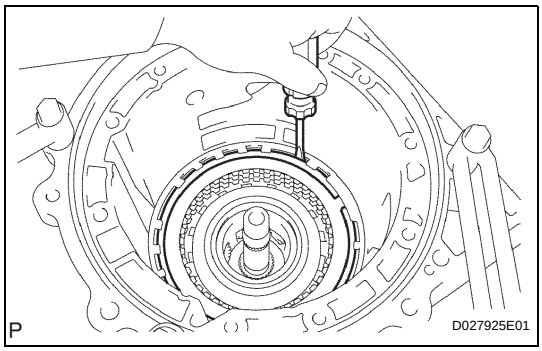

29. INSTALL NO. 3 BRAKE SNAP RING

(a) Using a screwdriver, install the snap ring.

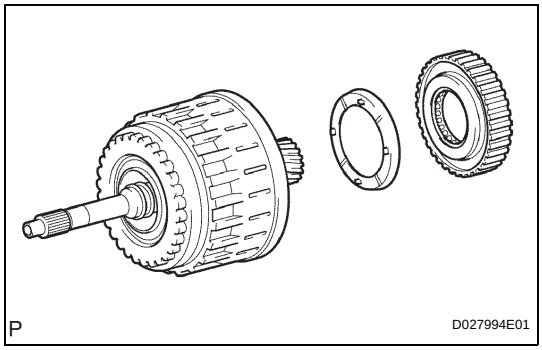

30. INSTALL NO. 2 1-WAY CLUTCH ASSEMBLY

(a) Install the No. 2 1-way clutch assembly and No. 2 clutch drum thrust washer onto the clutch drum and input shaft.

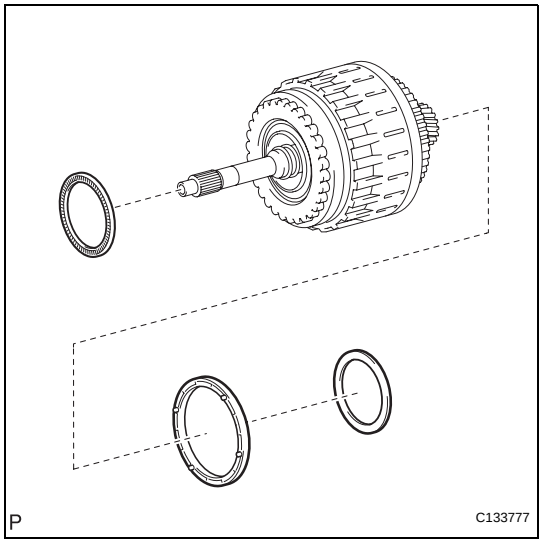

31. INSTALL CLUTCH DRUM AND INPUT SHAFT ASSEMBLY

(a) Install the thrust needle roller bearing.

(b) Coat the race with petroleum jelly and install it onto the clutch drum thrust washer.

Thrust needle roller bearing and diameter

Item	Inside	Outside
Thrust needle roller bearing	71.9 mm (2.831 in.)	85.6 mm (3.370 in.)
Race	73.6 mm (2.898 in.)	102.0 mm (4.016 in.)

(c) Install the clutch drum thrust washer and race onto the clutch drum and input shaft assembly.

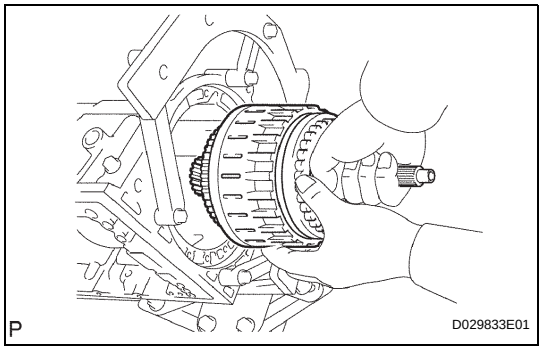

(d) Install the input shaft sub-assembly with the direct and reverse multiple disc assembly onto the transmission case.

AT

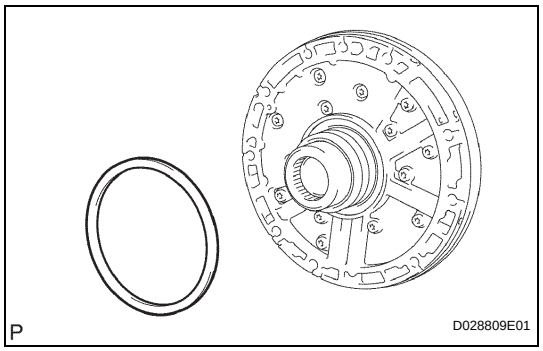

32. INSTALL OIL PUMP ASSEMBLY

(a) Install the No. 1 thrust bearing race onto the front oil pump.

No. 1 Thrust bearing race diameter

Item	Inside	Outside
Race	74.2 mm (2.921 in.)	87.74 mm (3.454 in.)

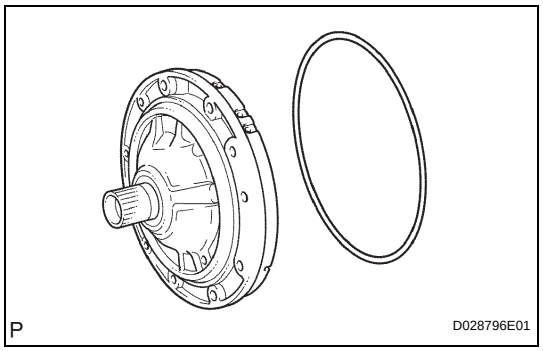

(b) Coat a new O-ring with ATF, and install it onto the oil pump assembly.

(c) Place the oil pump through the input shaft, and align the bolt holes in the oil pump assembly with the transmission case.

(d) Hold the input shaft, and lightly press the oil pump body to slide the oil seal rings into the overdrive direct clutch drum.

NOTICE:

Do not push on the oil pump strongly, as the oil seal ring will stick to the direct clutch drum.

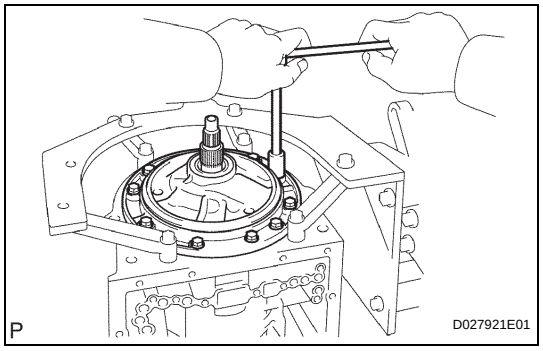

(e) Install the 10 bolts.

Torque: 21 N*m (214 kgf*cm, 15 ft.*lbf)

AT

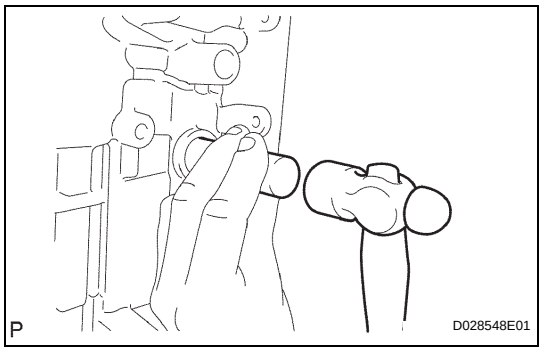

33. INSTALL MANUAL VALVE LEVER SHAFT OIL SEAL

(a) Using SST, drive in 2 new oil seals.

SST 09350-30020 (09350-07110)

(b) Coat the oil seal lips with MP grease.

34. INSPECT INDIVIDUAL PISTON OPERATION

INSPECTION (See page AT-217)

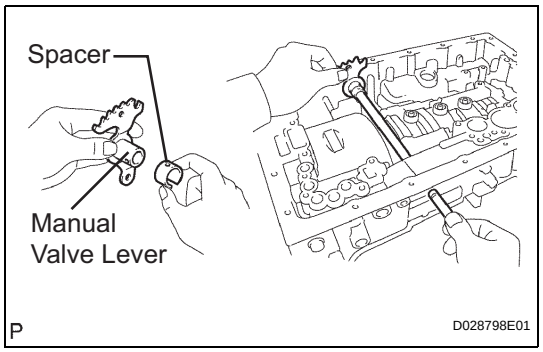

35. INSTALL MANUAL VALVE LEVER SUB-ASSEMBLY

(a) Install a new spacer onto the manual valve lever.

(b) Install the manual valve lever shaft onto the transmission case through the manual valve lever.

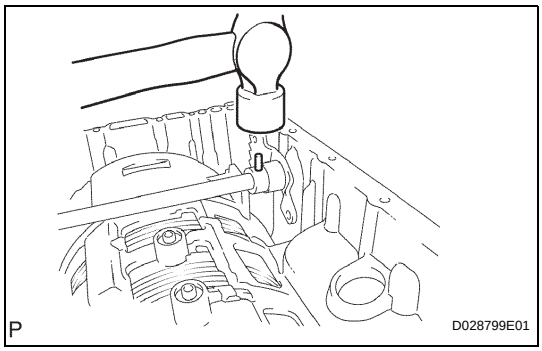

(c) Using a hammer, tap in a new spring pin.

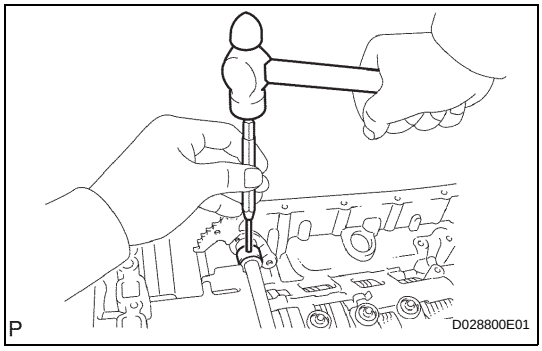

(d) Align the manual valve lever indentation with the spacer hole, and stake them together with a punch.
(e) Make sure the shaft rotates smoothly.

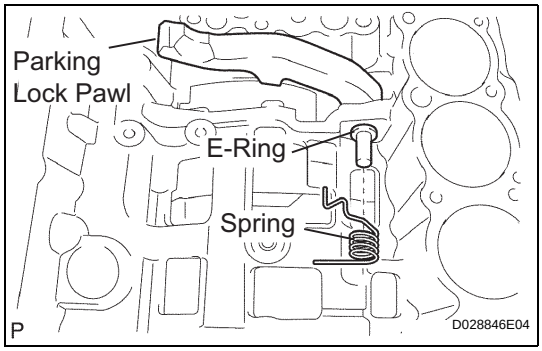

36. INSTALL PARKING LOCK PAWL SHAFT
(a) Install the E-ring onto the shaft.
(b) Install the parking lock pawl, shaft and spring.

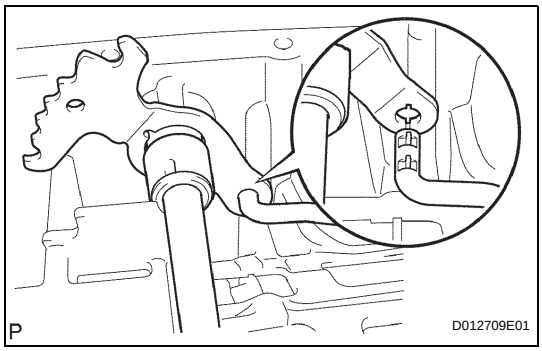

37. INSTALL PARKING LOCK ROD SUB-ASSEMBLY
(a) Connect the parking lock rod to the manual valve lever.

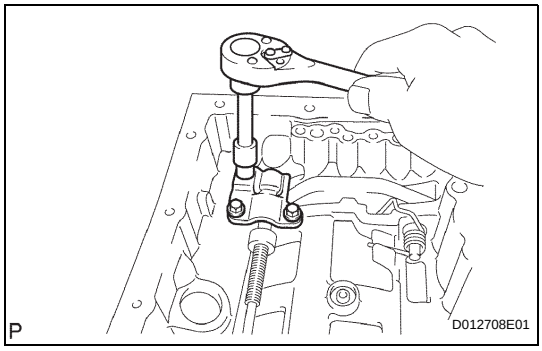

38. INSTALL PARKING LOCK PAWL BRACKET
(a) Place the parking lock pawl bracket onto the transmission case and tighten the 3 bolts.
Torque: 7.4 N*m (75 kgf*cm, 65 in.*lbf)

AT

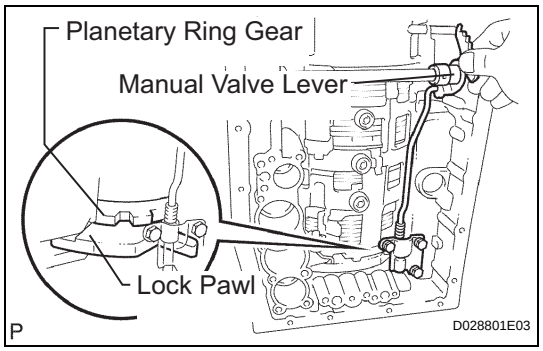

(b) Shift the manual valve lever to the P position, and confirm that the planetary ring gear is correctly locked up by the lock pawl.

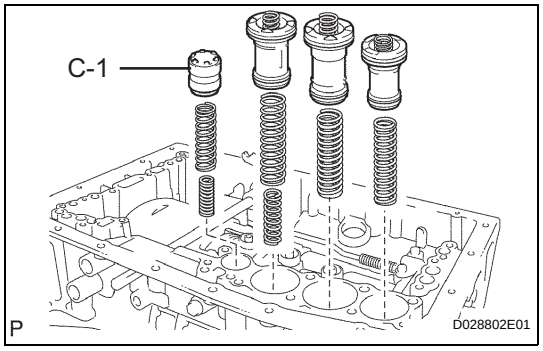

39. INSTALL C-1 ACCUMULATOR VALVE

(a) Coat a new O-ring with ATF, and install it onto the piston.

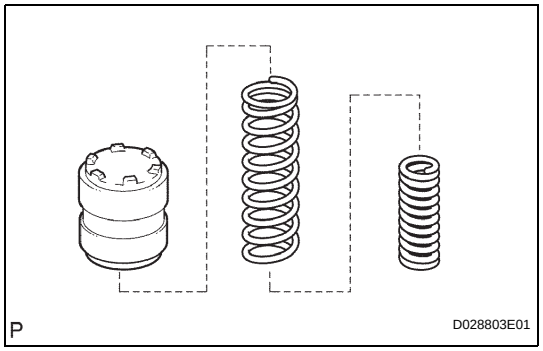

(b) Install the 2 springs and accumulator valve into the hole.

Accumulator spring

Spring	Free length Outer diameter	Color
C-1 Inner	30.40 mm (1.197 in.) 11.40 mm (0.449 in.)	Pink
C-1 Outer	48.76 mm (1.920 in.) 16.60 mm (0.654 in.)	Light green

AT

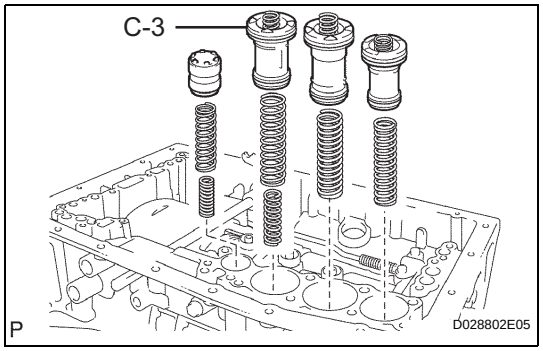

40. INSTALL C-3 ACCUMULATOR PISTON

(a) Coat a new O-ring with ATF, and install it onto the piston.

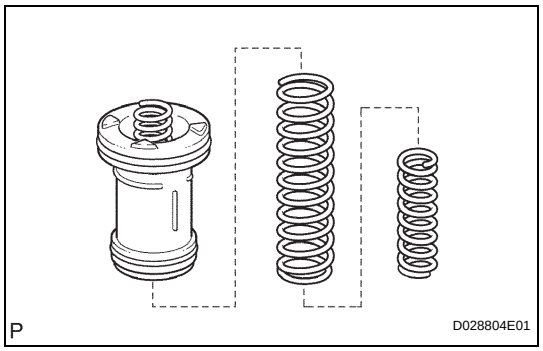

(b) Install the 2 springs and accumulator piston into the hole.

Accumulator spring

Spring	Free length Outer diameter	Color
C-3 Inner	44.0 mm (1.732 in.) 14.0 mm (0.551 in.)	Yellow
C-3 Outer	73.35 mm (2.888 in.) 19.90 mm (0.784 in.)	Red

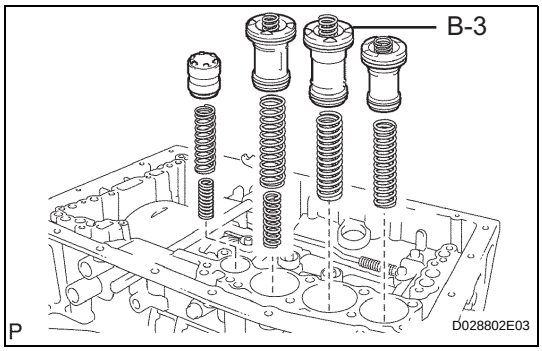

41. INSTALL B-3 ACCUMULATOR PISTON

(a) Coat 2 new O-rings with ATF, and install them onto the piston.

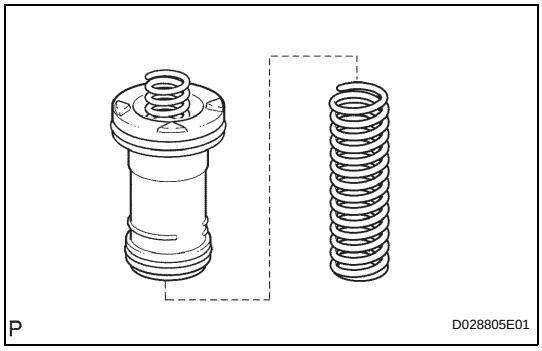

(b) Install the spring and accumulator piston into the hole.

Accumulator spring

Spring	Free length Outer diameter	Color
B-3	70.5 mm (2.776 in.) 19.7 mm (0.776 in.)	Purple

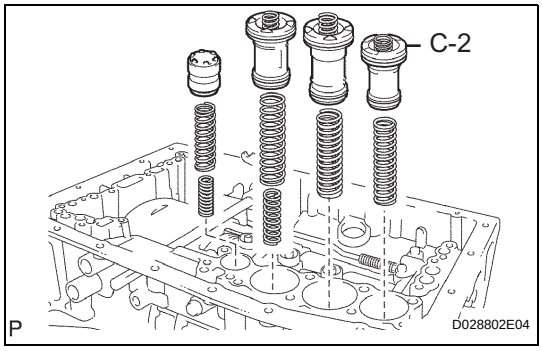

42. INSTALL C-2 ACCUMULATOR PISTON

(a) Coat 2 new O-rings with ATF, and install them onto the piston.

AT

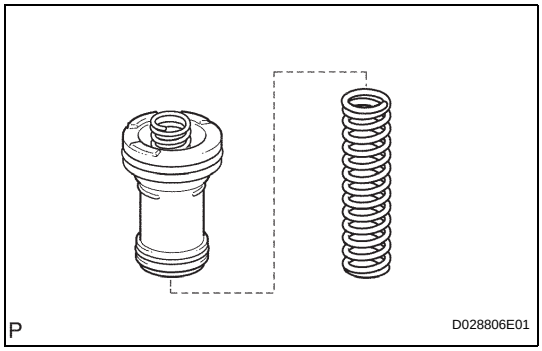

(b) Install the spring and accumulator piston into the hole.

Accumulator spring

Spring	Free length Outer diameter	Color
C-2	62.0 mm (2.441 in.) 15.9 mm (0.626 in.)	White

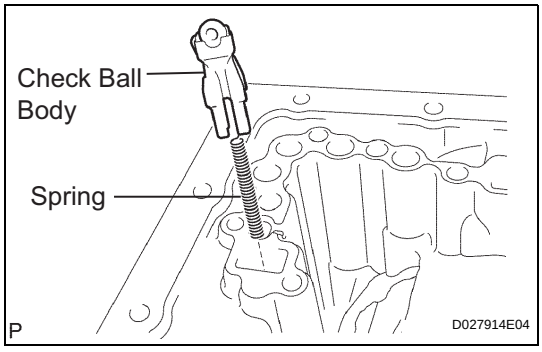

43. INSTALL CHECK BALL BODY

(a) Install the check ball body and the spring.

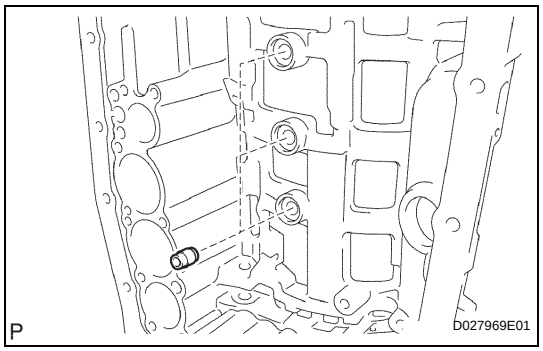

44. INSTALL BRAKE DRUM GASKET

(a) Install the 3 brake drum gaskets.

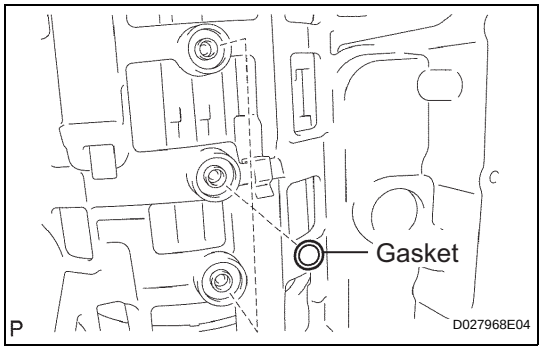

45. INSTALL TRANSAXLE CASE GASKET

(a) Install the 3 transaxle case gaskets.

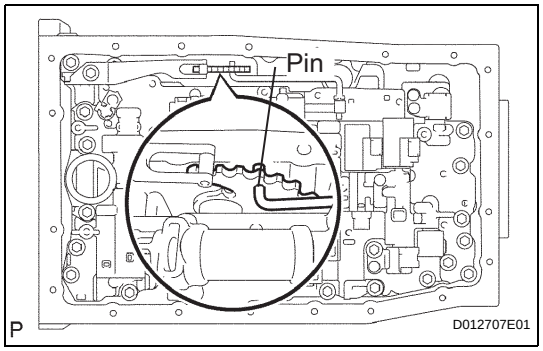

46. INSTALL TRANSMISSION VALVE BODY ASSEMBLY

(a) Align the groove of the manual valve with the pin of the lever.

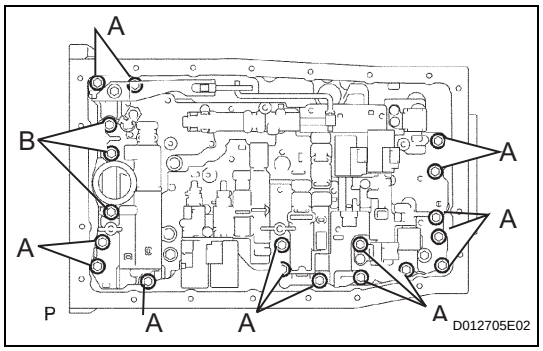

(b) Install the 19 bolts.
Torque: 11 N*m (112 kgf*cm, 8 ft.*lbf)
HINT:
- Each bolt length is as indicated below.
- Bolt length:
  25 mm (0.98 in.) for bolt A
  36 mm (1.42 in.) for bolt B

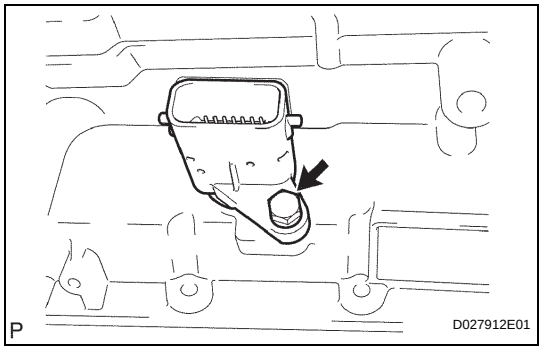

47. INSTALL TRANSMISSION WIRE

(a) Install a new O-ring onto the transmission wire.
(b) Install the transmission wire harness.
(c) Install the bolt.
Torque: 5.4 N*m (55 kgf*cm, 48 in.*lbf)
(d) Connect the solenoid connector.

AT

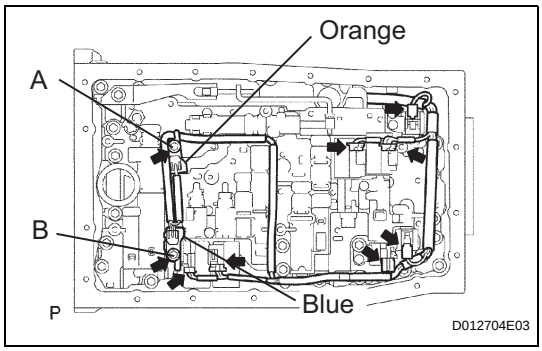

(e) Connect the 7 solenoid connectors.
(f) Install the ATF temperature sensor.
(g) Install the 2 clamps and the 2 bolts.
Torque: 10 N*m (100 kgf*cm, 7 ft.*lbf) for bolt A
11 N*m (112 kgf*cm, 8 ft.*lbf) for bolt B
HINT:
- Each bolt length is as indicated below.
- Bolt length:
  12 mm (0.47 in.) for bolt A
  36 mm (1.42 in.) for bolt B

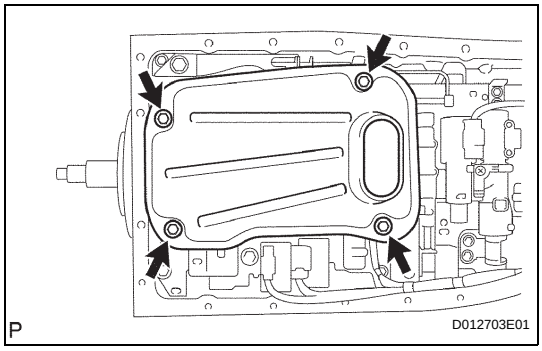

48. INSTALL VALVE BODY OIL STRAINER ASSEMBLY
(a) Coat a new O-ring with ATF, and install them onto the valve body oil strainer assembly.
(b) Install the oil strainer with the 4 bolts.
Torque: 10 N*m (100 kgf*cm, 7 ft.*lbf)

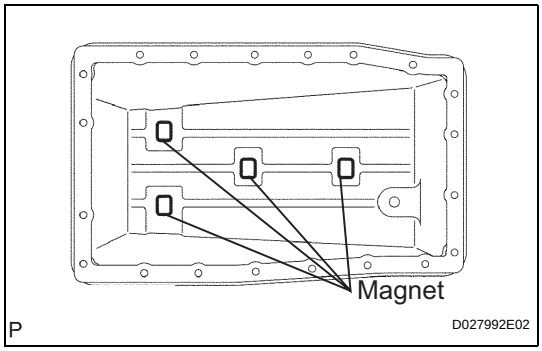

49. INSTALL TRANSMISSION OIL CLEANER MAGNET
(a) Install the 4 transmission oil cleaner magnets.

50. INSTALL AUTOMATIC TRANSMISSION OIL PAN SUB-ASSEMBLY
(a) Install a new gasket onto the oil pan.
(b) Install the 20 bolts.
Torque: 4.4 N*m (45 kgf*cm, 39 in.*lbf)
(c) Install the drain plug.
Torque: 28 N*m (285 kgf*cm, 21 ft.*lbf)

AT

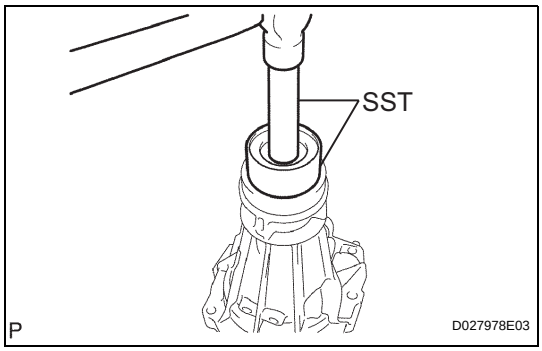

51. INSTALL AUTOMATIC TRANSMISSION EXTENSION HOUSING OIL SEAL
(a) Using SST and a hammer, tap in a new oil seal.
SST 09710-30050, 09950-70010 (09951-07100)

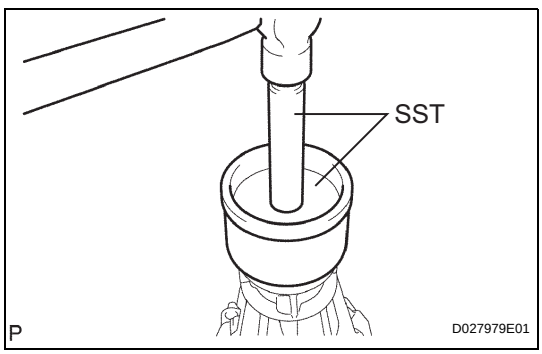

52. INSTALL EXTENSION HOUSING DUST DEFLECTOR
(a) Using SST and a hammer, tap in a new extension housing dust deflector.
SST 09223-15020, 09950-70010 (09951-07100)

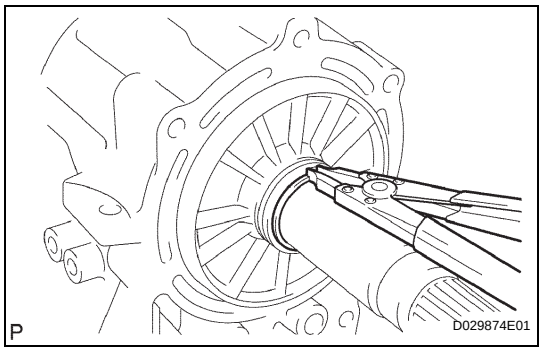

53. INSTALL EXTENSION HOUSING SUB-ASSEMBLY

(a) Install the thrust needle roller bearing and the 2 bearing races.

(b) Using a snap ring expander, install the snap ring.

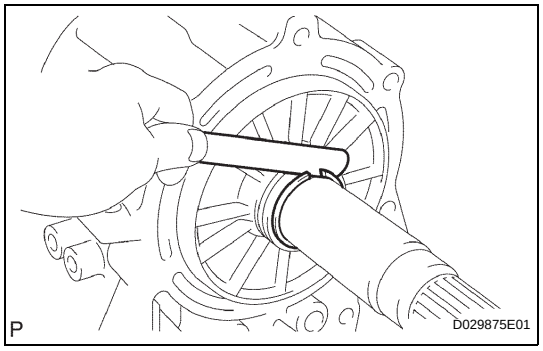

(c) Using a feeler gauge, measure the clearance between the snap ring and the race.
Clearance:
0.05 to 0.33 mm (0.002 to 0.013 in.)
If the Clearance is still standard, select another race.
HINT:
There are 6 different thickness for the race.
Race thickness

No.	Thickness	No.	Thickness
1	3.7 mm (0.146 in.)	4	4.0 mm (0.158 in.)
2	3.8 mm (0.150 in.)	5	4.1 mm (0.161 in.)
3	3.9 mm (0.154in.)	6	4.2 mm (0.165 in.)

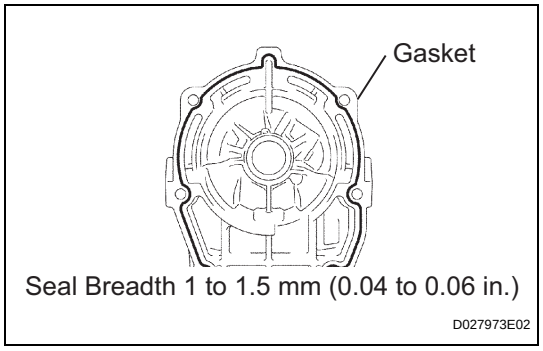

(d) Install the gasket to the extension housing.
HINT:
Take care not to drop the gasket.

(e) Clean the threads of the bolts and the case with white gasoline.

(f) Apply FIPG to the extension housing.
FIPG:
Toyota Genuine Seal Packing 1281, Three Bond 1281 or Equivalent

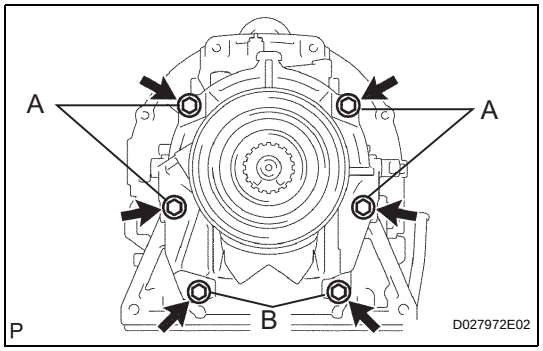

(g) Install the extension housing with 6 bolts.
Torque: 34 N*m (345 kgf*cm, 25 ft.*lbf)
HINT:
- Each bolt length is indicated below.
- Bolt length:
  45 mm (1.722 in.) for bolt A
  35 mm (1.378 in.) for bolt B

AT

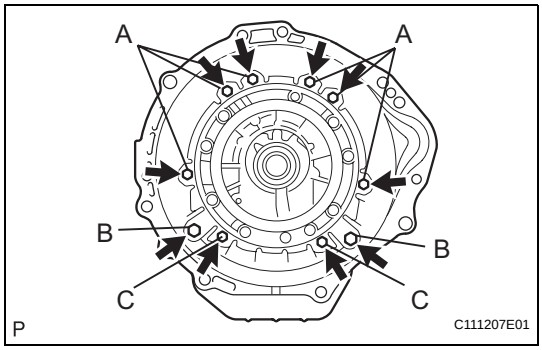

54. INSTALL AUTOMATIC TRANSMISSION HOUSING

(a) Clean the threads of the bolts and the case with white gasoline.

(b) Install the transmission housing with the 10 bolts.

Torque: 34 N*m (345 kgf*cm, 25 ft.*lbf) for bolt A
57 N*m (581 kgf*cm, 42 ft.*lbf) for bolt B
34 N*m (345 kgf*cm, 25 ft.*lbf) for bolt C

HINT:

- Each bolt length is indicated below.
- Bolt length:
  Bolt A: 14 mm
  Bolt B: 17 mm
  Bolt C: 14 mm

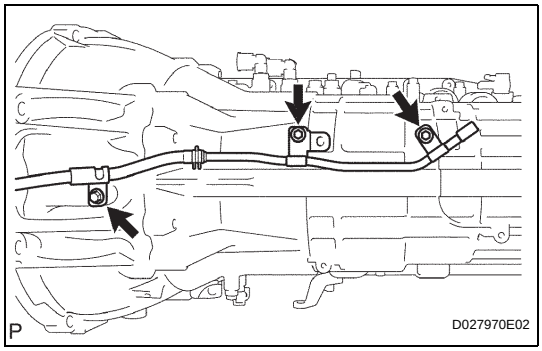

55. INSTALL AUTOMATIC TRANSAXLE BREATHER TUBE

(a) Install a new O-ring onto the breather tube.

(b) Install the breather tube with the 3 bolts.

Torque: 5.4 N*m (55 kgf*cm, 48 in.*lbf)

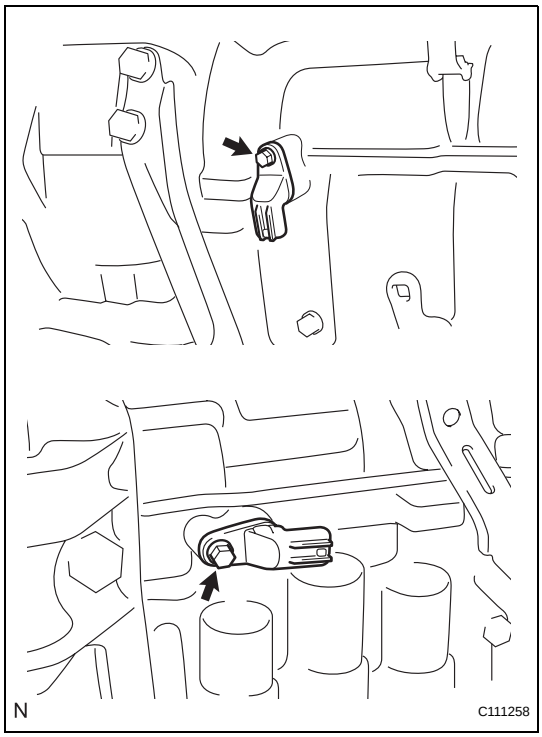

56. INSTALL TRANSMISSION REVOLUTION SENSOR

(a) Coat 2 new O-rings with AFT, and install one onto each transmission revolution sensor.

(b) Install the 2 transmission revolution sensors.

(c) Install the 2 bolts.

Torque: 5.4 N*m (55 kgf*cm, 48 in.*lbf)

AT

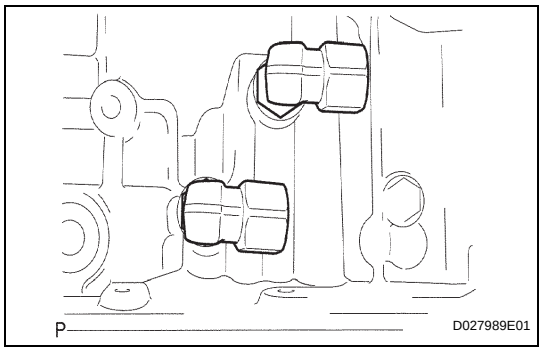

57. INSTALL OIL COOLER TUBE UNION

(a) Coat 2 new O-rings with ATF, and install one onto each oil cooler tube union.

(b) Install the 2 oil cooler tube unions.
Torque: 29 N*m (296 kgf*cm, 21 ft.*lbf)

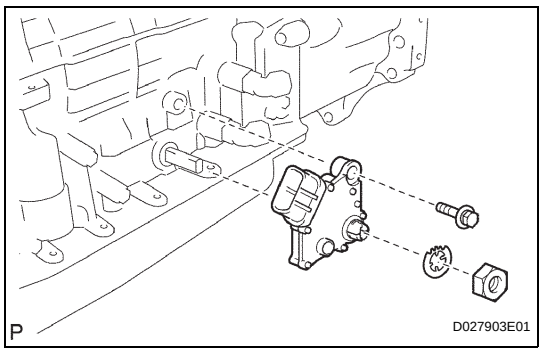

58. INSTALL PARK/NEUTRAL POSITION SWITCH ASSEMBLY

(a) Install the park/neutral position switch onto the manual valve lever shaft, and temporarily install the adjusting bolt.

(b) Install a new lock washer and the nut.
Torque: 6.9 N*m (70 kgf*cm, 61 in.*lbf)

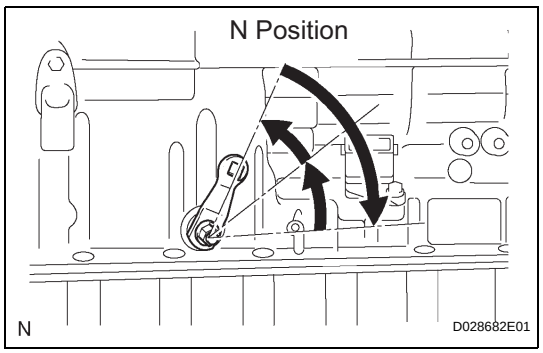

(c) Push the control shaft rearward as much as possible.

(d) Return the control shaft lever 2 notches to the N position.

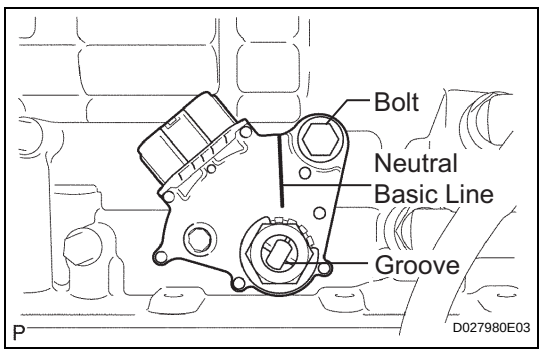

(e) Align the neutral basic line with the switch groove as shown in the illustration, and tighten the adjusting bolt.
Torque: 13 N*m (129 kgf*cm, 9.4 ft.*lbf)

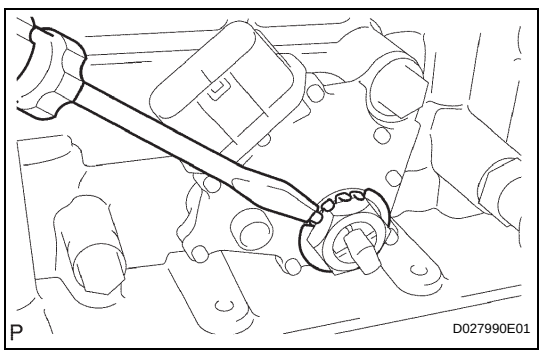

(f) Using a screwdriver, bend the tabs of the lock washer.
HINT:
Bend at least 2 of the lock washer tabs.

AT

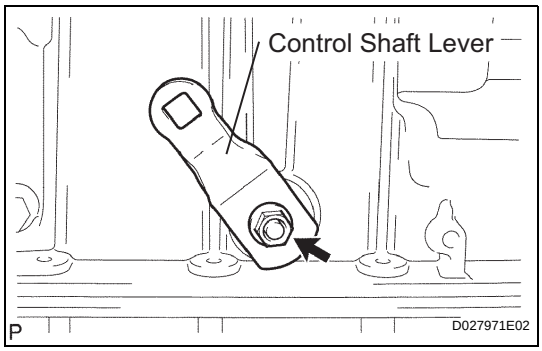

59. INSTALL TRANSMISSION CONTROL SHAFT LEVER LH

(a) Install the control shaft lever LH with the washer and nut.
Torque: 16 N*m (163 kgf*cm, 12 ft.*lbf)

OIL PUMP

COMPONENTS

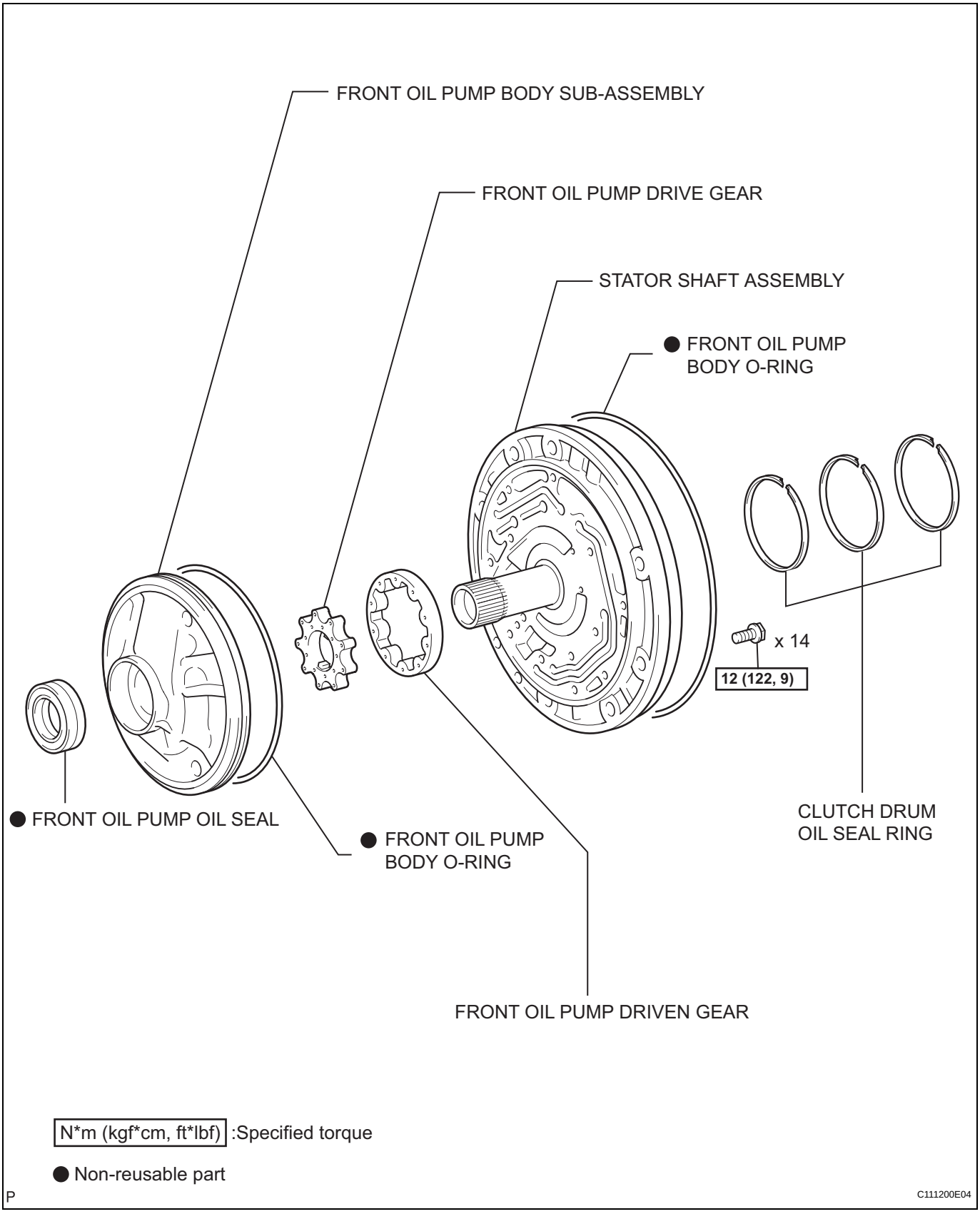

AT

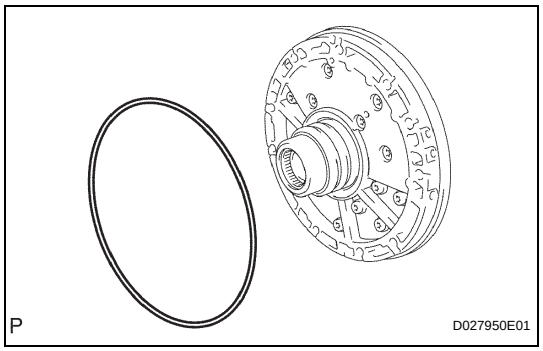

DISASSEMBLY

1. REMOVE FRONT OIL PUMP BODY O-RING

(a) Remove the O-ring from the oil pump assembly.

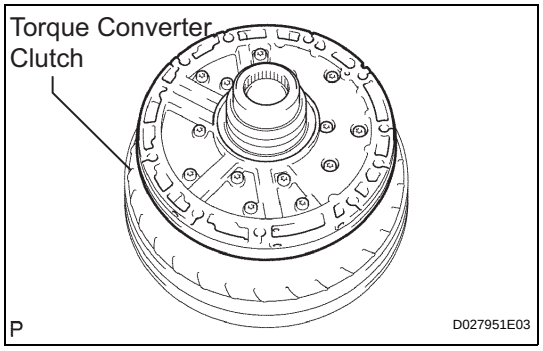

2. FIX OIL PUMP ASSEMBLY

(a) Place the oil pump body on the torque converter clutch.

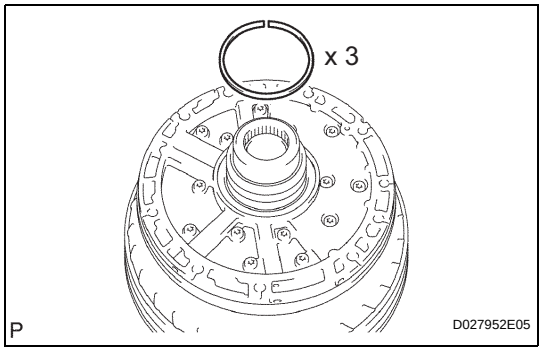

3. REMOVE CLUTCH DRUM OIL SEAL RING

(a) Remove the 3 oil seal rings.

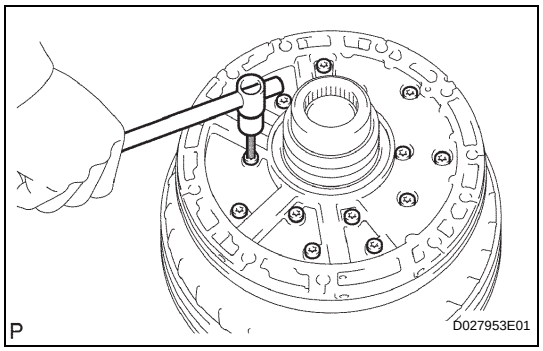

4. REMOVE STATOR SHAFT ASSEMBLY

(a) Remove the 14 bolts, and then remove the stator shaft from the oil pump body.

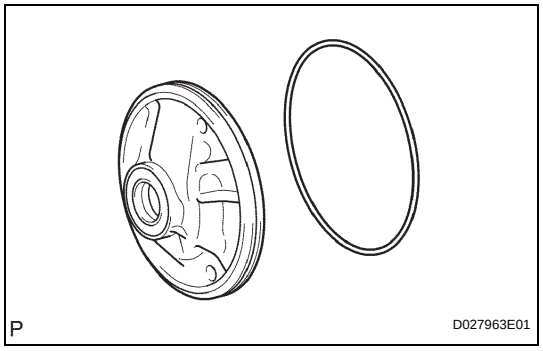

5. REMOVE FRONT OIL PUMP BODY O-RING

(a) Remove the O-ring from the oil pump body.

(b) Remove the oil pump body from the torque converter clutch.

6. INSPECT FRONT OIL PUMP BODY SUB-ASSEMBLY (See page AT-240)

7. INSPECT STATOR SHAFT ASSEMBLY (See page AT-240)

8. INSPECT CLEARANCE OF OIL PUMP ASSEMBLY

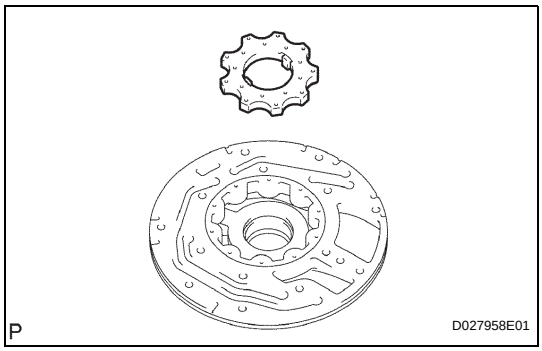

9. REMOVE FRONT OIL PUMP DRIVE GEAR

(a) Remove the front oil pump drive gear from the front oil pump body.

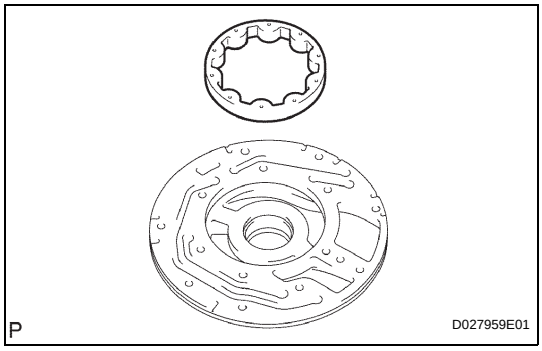

10. REMOVE FRONT OIL PUMP DRIVEN GEAR

(a) Remove the front oil pump driven gear from the front oil pump body.

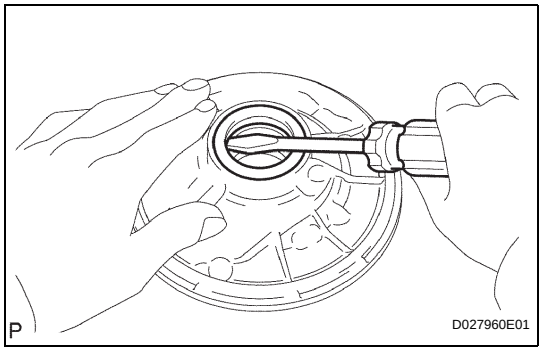

11. REMOVE FRONT OIL PUMP OIL SEAL

(a) Using a screwdriver, remove the oil seal.

NOTICE:

Be careful not to damage the bushing and oil pump body.

AT

INSPECTION

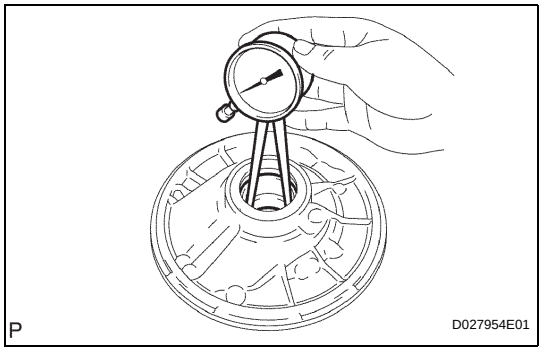

1. INSPECT FRONT OIL PUMP BODY SUB-ASSEMBLY

(a) Using a dial indicator, measure the inside diameter of the oil pump body bushing.

Maximum inside diameter:

38.188 mm (1.504 in.)

If the inside diameter is greater than the maximum, replace the oil pump body.

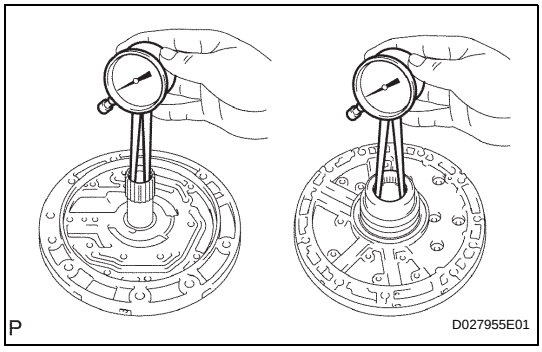

2. INSPECT STATOR SHAFT ASSEMBLY

(a) Using a dial indicator, measure the inside diameter of the stator shaft bushing.

Maximum inside diameter:

Front side:

21.577 mm (0.850 in.)

Rear side:

32.08 mm (1.263 in.)

If the inside diameter is grater than the maximum, replace the stator shaft.

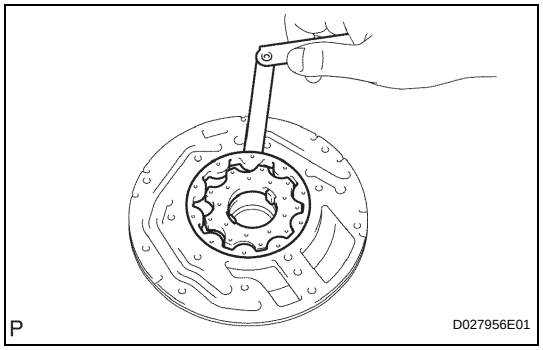

3. INSPECT CLEARANCE OF OIL PUMP ASSEMBLY

(a) Push the driven gear to one side of the body.

(b) Using a feeler gauge, measure the clearance.

Standard body clearance:
0.10 to 0.17 mm (0.0039 to 0.0067 in.)
Maximum body clearance:
0.17 mm (0.0067 in.)

If the body clearance is greater than the maximum, replace drive gear, the driven gear or pump body.

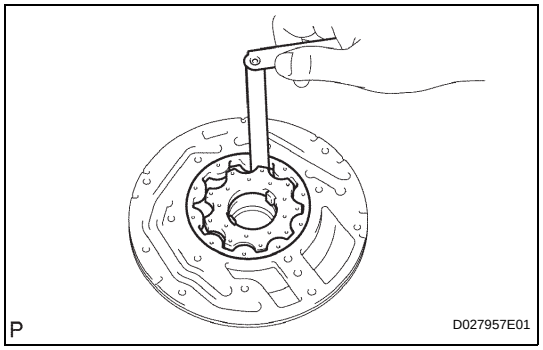

(c) Using a feeler gauge, measure the clearance between the driven gear teeth and drive gear teeth.

Standard tip clearance:
0.07 to 0.15 mm (0.0028 to 0.0059 in.)
Maximum tip clearance:
0.15 mm (0.0059 in.)

If the tip clearance is greater than the maximum, replace drive gear, the driven gear or pump body.

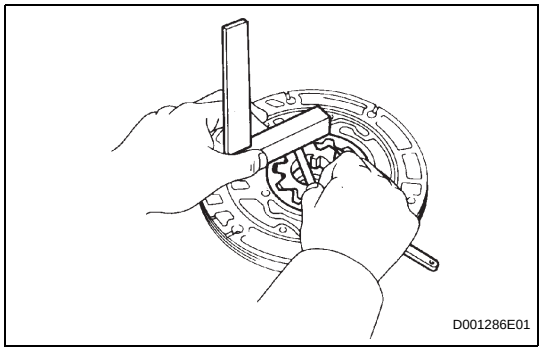

(d) Using a steel straight edge and feeler gauge, measure the side clearance of both gears.

Standard side clearance:
0.02 to 0.05 mm (0.0008 to 0.0020 in.)
Maximum side clearance:
0.05 mm (0.0020 in.)

(e) There are 5 different thicknesses for the drive and driven gears.

Drive and drive gears thickness

Mark	Thickness
0	10.740 to 10.749 mm (0.4228 to 0.4232 in.)
1	10.750 to 10.759 mm (0.4232 to 0.4236 in.)
2	10.760 to 10.769 mm (0.4236 to 0.4240 in.)
3	10.770 to 10.779 mm (0.4240 to 0.4244 in.)
4	10.780 to 10.789 mm (0.4244 to 0.4248 in.)

If the side clearance is greater than the maximum, replace drive gear, driven gear or pump body.

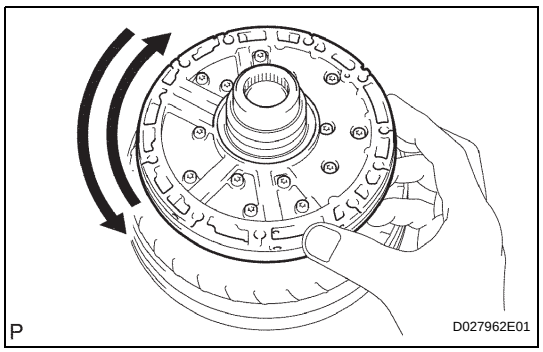

4. INSPECT FRONT OIL PUMP DRIVE GEAR ROTATION

(a) Make sure the drive gear rotates smoothly.

(b) Remove the oil pump assembly from the torque converter.

AT

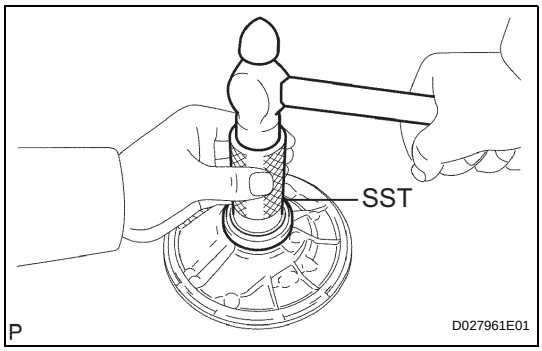

REASSEMBLY

1. INSTALL FRONT OIL PUMP OIL SEAL

(a) Using SST and a hammer, install a new oil seal.
SST 09350-30020 (09351-32140)
HINT:
The oil seal end should be flush with the outer edge of the pump body.

(b) Coat the oil seal lip with MP grease.

2. FIX FRONT OIL PUMP BODY SUB-ASSEMBLY

(a) Place the oil pump body on the torque converter clutch.

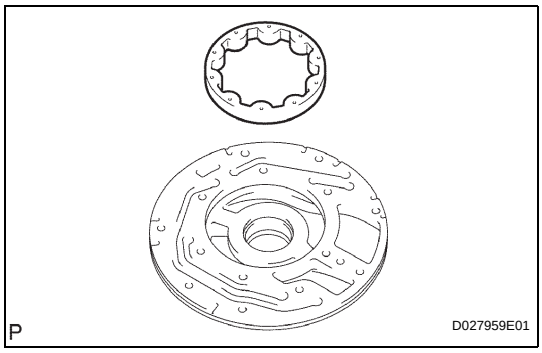

3. INSTALL FRONT OIL PUMP DRIVEN GEAR

(a) Coat the driven gear with ATF.

(b) Install the driven gear onto the oil pump body.

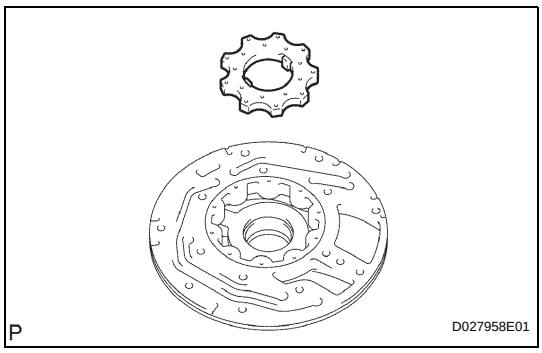

4. INSTALL FRONT OIL PUMP DRIVE GEAR

(a) Coat the drive gear with ATF.

(b) Install the drive gear onto the oil pump body.

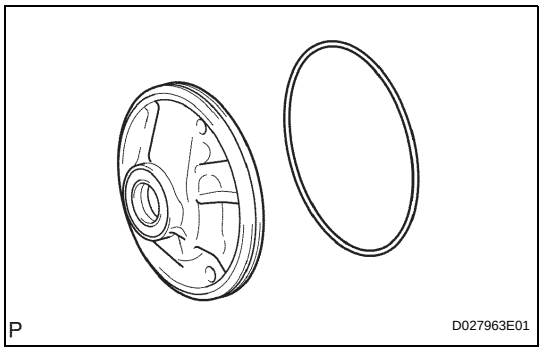

5. INSTALL FRONT OIL PUMP BODY O-RING

(a) Install a new O-ring onto the oil pump body.

AT

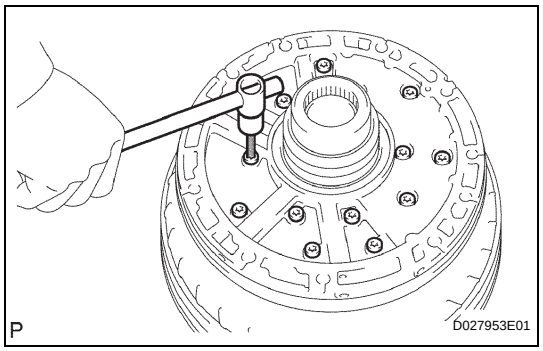

6. INSTALL STATOR SHAFT ASSEMBLY

(a) Align the bolt holes of the stator shaft and oil pump body and install the stator shaft.

(b) Install the 14 bolts.

Torque: 12 N*m (122 kgf*cm, 9 ft.*lbf)

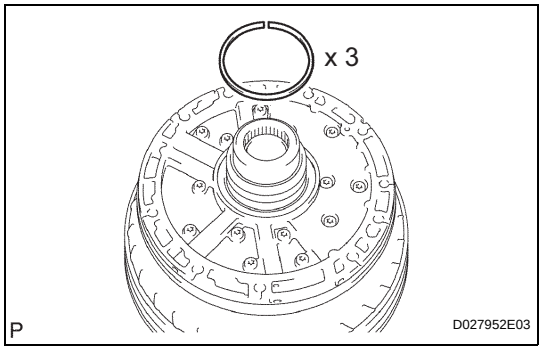

7. INSTALL CLUTCH DRUM OIL SEAL RING

(a) Coat the 3 oil seal rings with ATF.

(b) Put together the ends of the 3 oil seal rings together with the overlap distance 8 mm (0.314 in.) or less, and then install them onto the stator shaft groove.

NOTICE:

Do not over-widen the ring ends.

HINT:

After installing the oil seal rings, check that they rotate smoothly.

8. INSPECT OIL PUMP DRIVE GEAR ROTATION (See page AT-241)

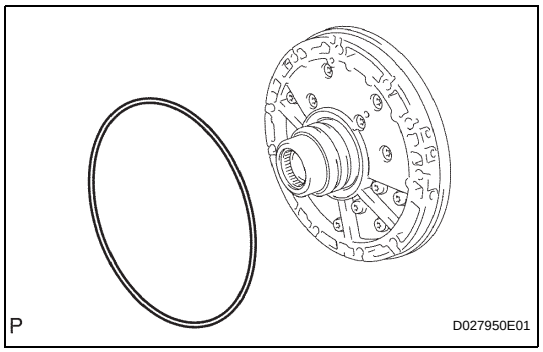

9. INSTALL FRONT OIL PUMP BODY O-RING

(a) Install a new O-ring onto the oil pump assembly.

CLUTCH DRUM AND INPUT SHAFT ASSEMBLY

COMPONENTS

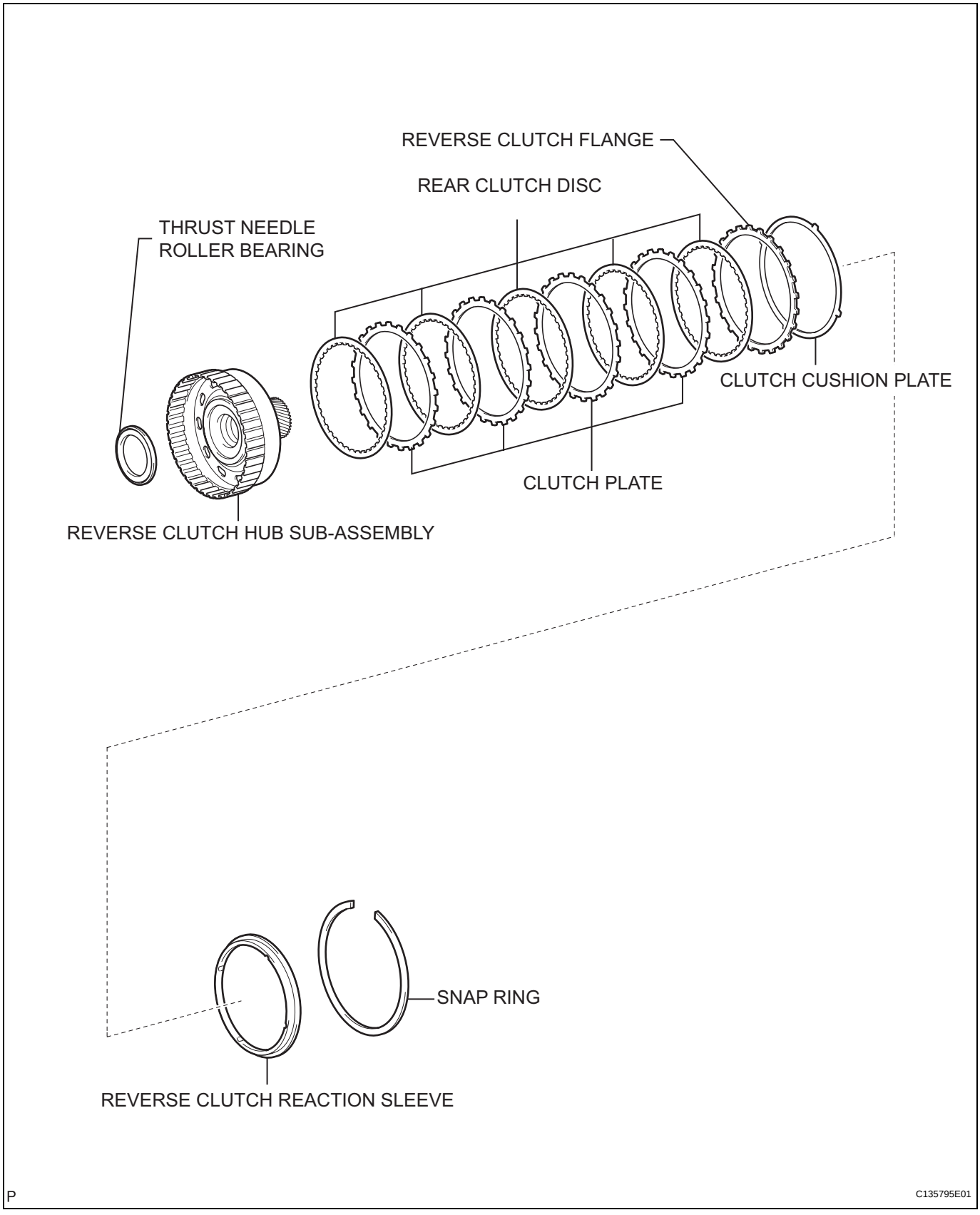

AT

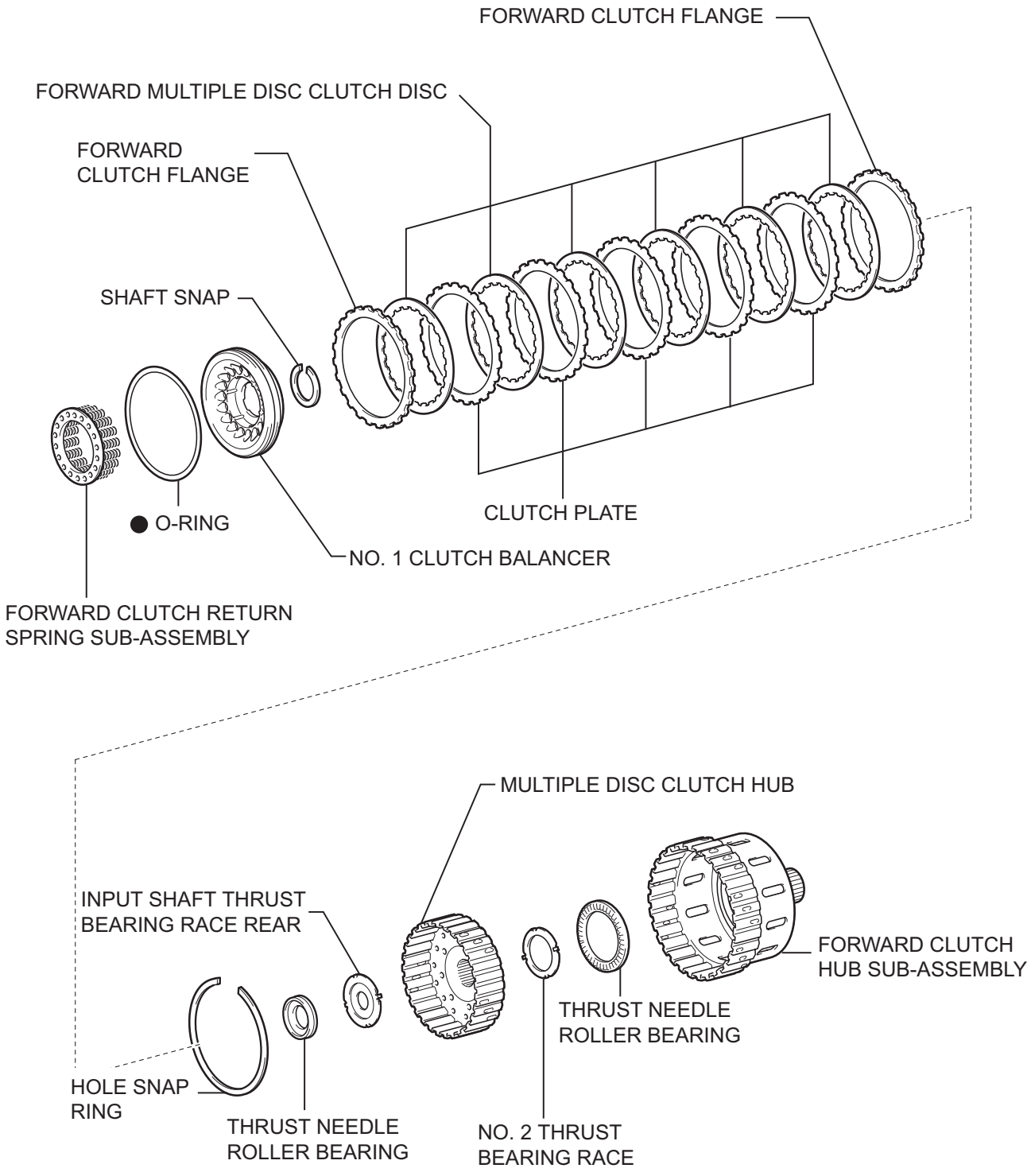

● Non-reusable part

P

C111203E03

AT

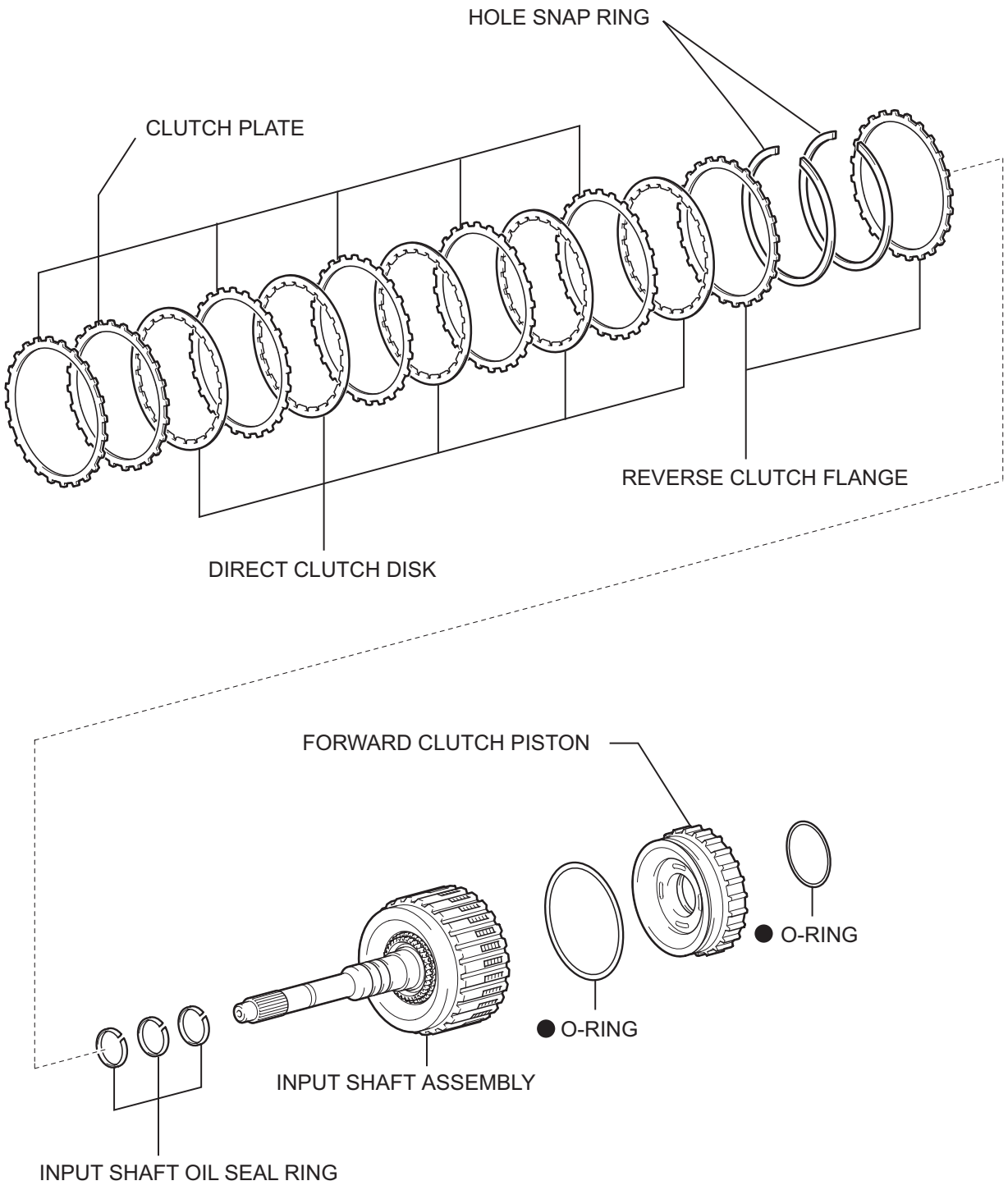

AT

● Non-reusable part

P

C111202E03

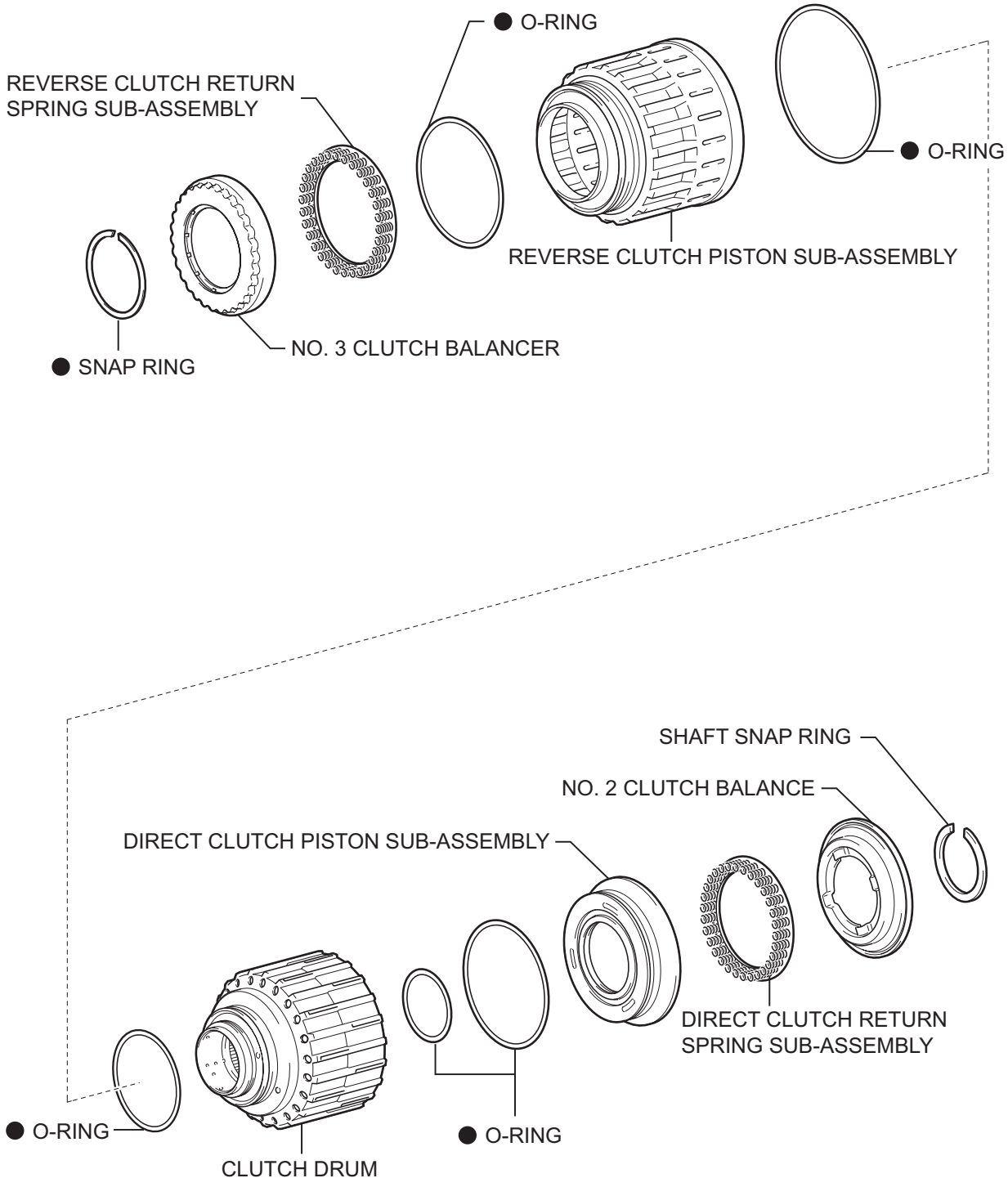

● Non-reusable part

P

C129564E01

AT

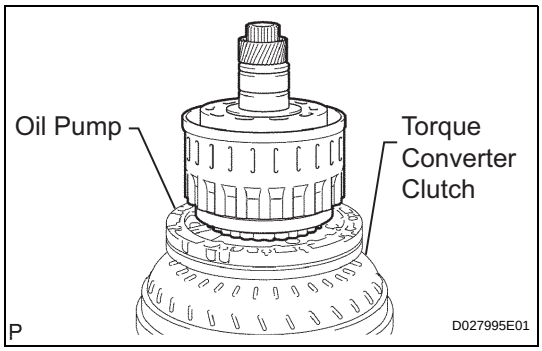

DISASSEMBLY

1. FIX CLUTCH DRUM AND INPUT SHAFT ASSEMBLY

(a) Place the oil pump onto the torque converter clutch, and then place the clutch drum and input shaft assembly onto the oil pump.

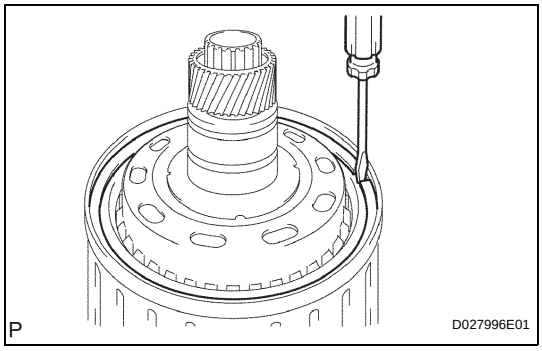

2. REMOVE REVERSE CLUTCH HUB SUB-ASSEMBLY

(a) Using a screwdriver, remove the snap ring from the clutch drum and input shaft assembly.

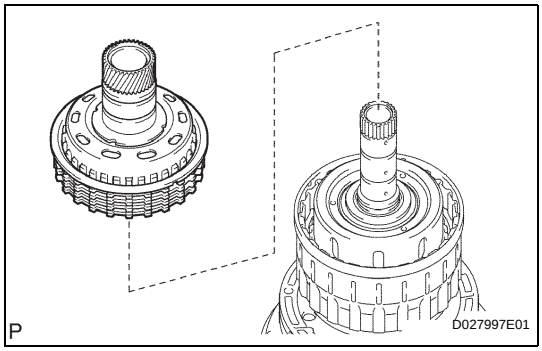

(b) Remove the reverse clutch hub sub-assembly, reverse clutch reaction sleeve, clutch cushion plate reverse clutch flange, 5 reverse clutch discs and 4 clutch plates from the clutch drum assembly.

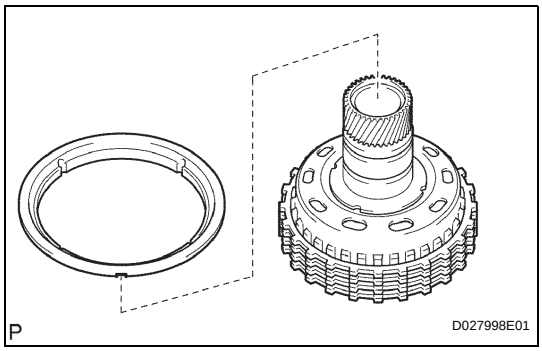

3. REMOVE REVERSE CLUTCH REACTION SLEEVE

(a) Remove the reverse clutch reaction sleeve from the reverse clutch hub sub-assembly.

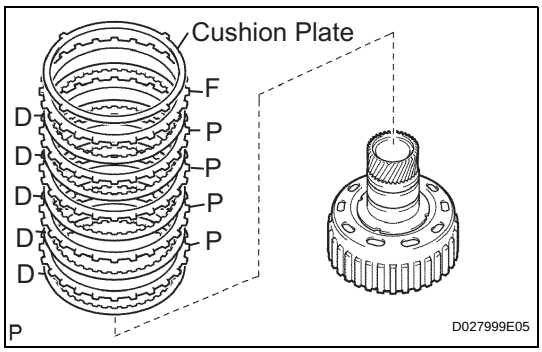

4. REMOVE REAR CLUTCH DISC

(a) Remove the clutch cushion plate, reverse clutch flange, 4 plates and 5 discs from the reverse clutch hub.

5. INSPECT REAR CLUTCH DISC (See page AT-254)

6. INSPECT REVERSE CLUTCH HUB SUB-ASSEMBLY (See page AT-255)

AT

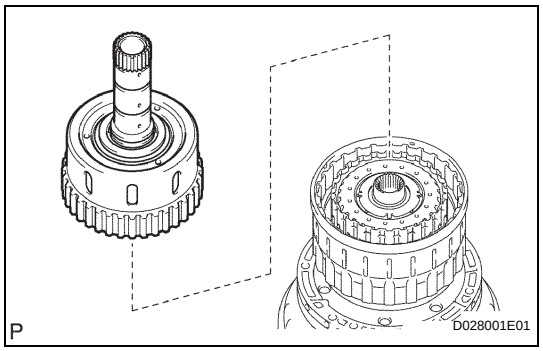

7. REMOVE FORWARD CLUTCH HUB SUB-ASSEMBLY

(a) Remove the forward clutch hub sub-assembly from the clutch drum assembly.

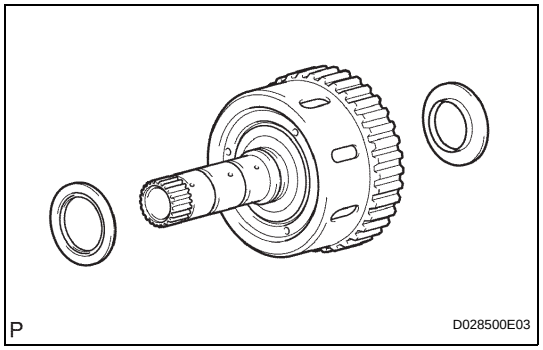

(b) Remove the 2 thrust needle roller bearings from the forward clutch hub sub-assembly.

8. INSPECT FORWARD CLUTCH HUB SUB-ASSEMBLY (See page AT-255)

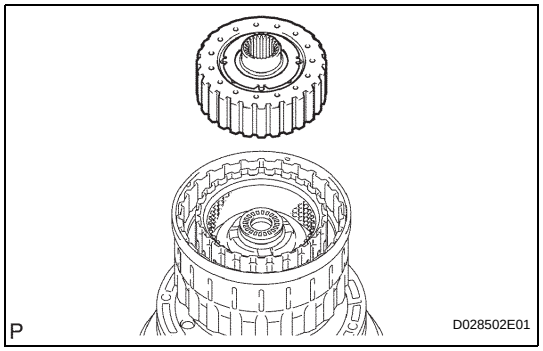

9. REMOVE MULTIPLE DISC CLUTCH HUB

(a) Remove the multiple disc clutch hub from the clutch drum assembly.

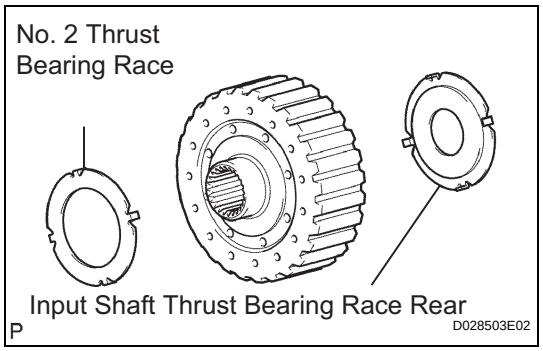

(b) Remove the No. 2 thrust bearing race and input shaft thrust bearing race rear from the multiple disc clutch hub.

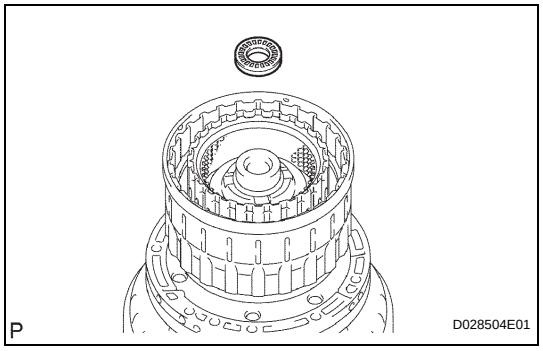

10. REMOVE INPUT SHAFT ASSEMBLY

(a) Remove the thrust needle roller bearing from the clutch drum assembly.

AT

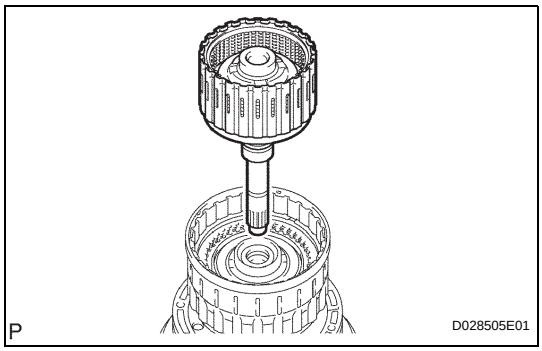

(b) Remove the input shaft assembly from the clutch drum assembly.

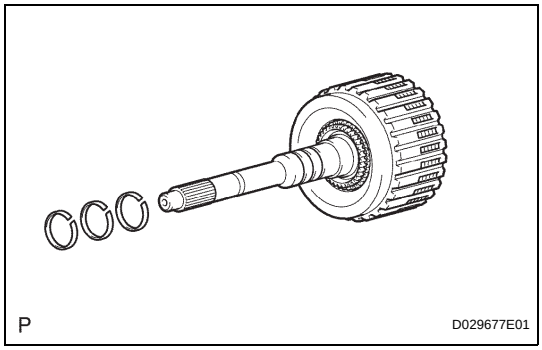

11. REMOVE INPUT SHAFT OIL SEAL RING

(a) Remove the 3 oil seal rings from the input shaft assembly.

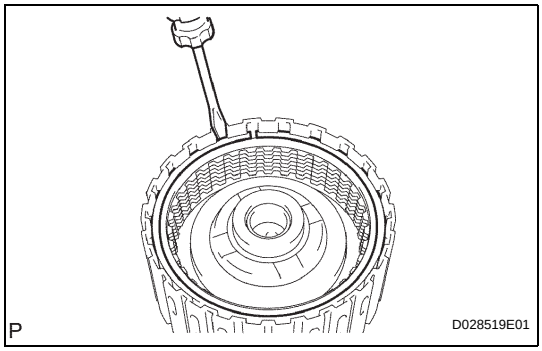

12. REMOVE FORWARD MULTIPLE DISC CLUTCH DISC

(a) Using a screwdriver, remove the hole snap ring.

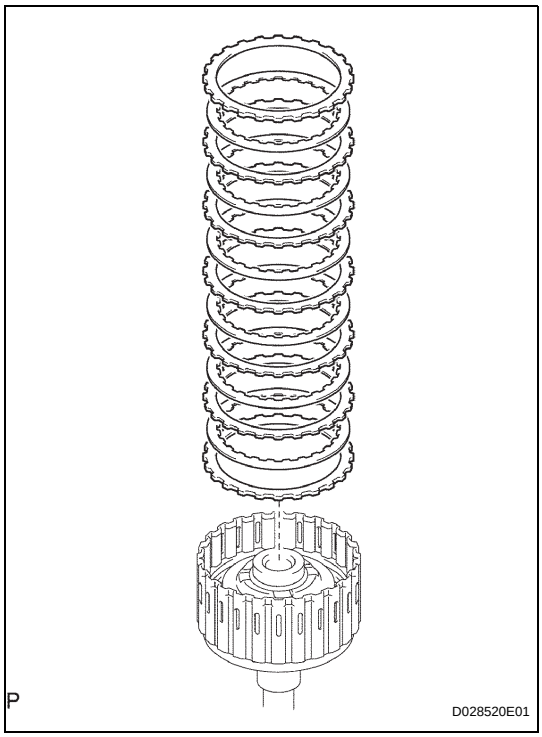

(b) Remove the 2 flanges, 6 discs and 5 plates from the input shaft assembly.

13. INSPECT FORWARD MULTIPLE DISC CLUTCH DISC (See page AT-255)

AT

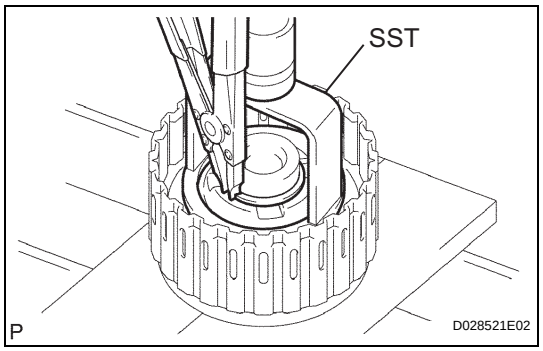

14. REMOVE NO. 1 CLUTCH BALANCER

(a) Place SST on the No. 1 clutch balancer, and compress the return spring with a press.
SST 09350-30020 (09350-07040, 09350-07070)

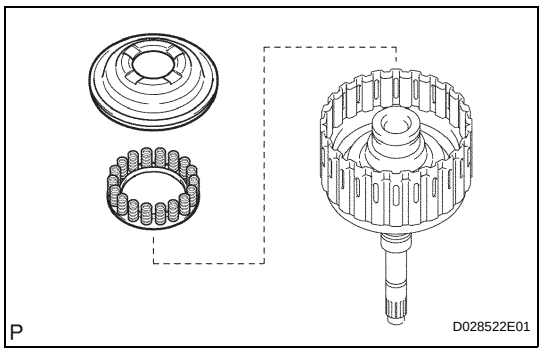

(b) Remove the No. 1 clutch balancer and forward clutch return spring from the input shaft assembly.

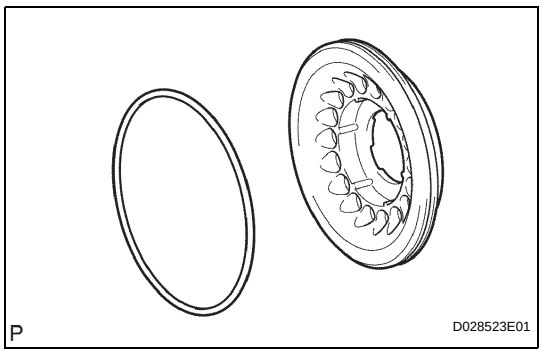

(c) Remove the O-ring from the No. 1 clutch balancer.

15. INSPECT FORWARD CLUTCH RETURN SPRING SUB-ASSEMBLY (See page AT-255)

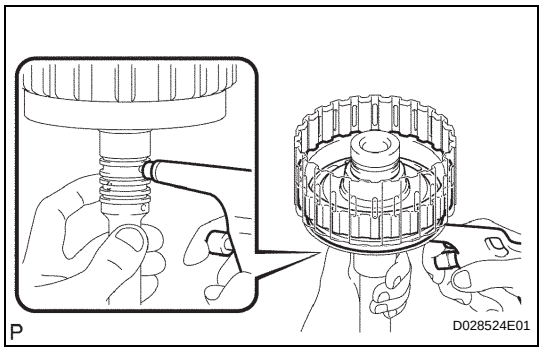

16. REMOVE FORWARD CLUTCH PISTON

(a) Holding the forward clutch piston by hand, apply compressed air (392 kPa, 4.0 kgf/cm^2, 57 psi) to the input shaft to remove the forward clutch piston.

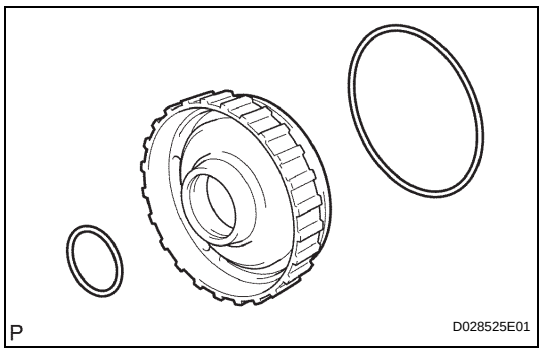

(b) Remove the 2 O-rings from the forward clutch piston.

AT

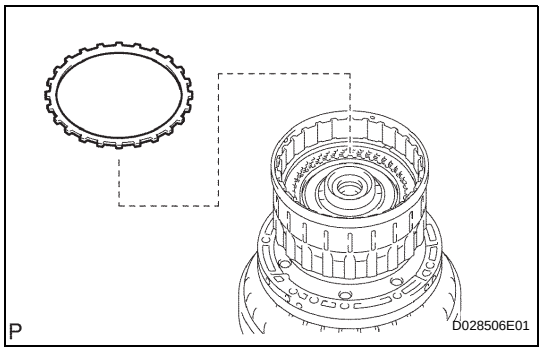

17. REMOVE REVERSE CLUTCH FLANGE

(a) Remove the reverse clutch flange from the clutch drum assembly.

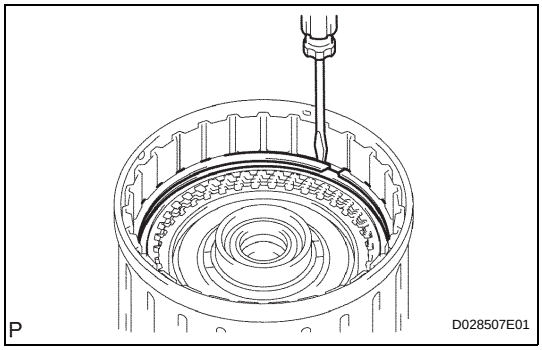

18. REMOVE DIRECT CLUTCH DISK

(a) Using a screwdriver, remove the 2 hole snap rings from the clutch drum assembly.

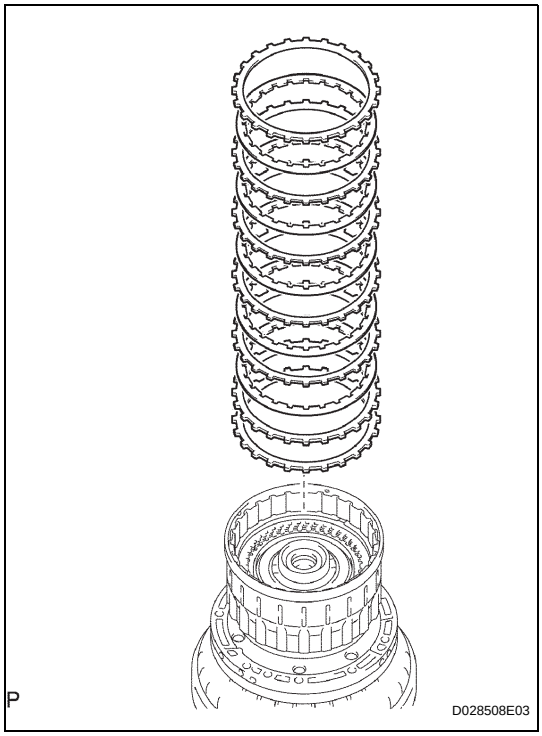

(b) Remove the reverse clutch flange, 6 plates and 5 discs from the clutch drum assembly.

19. INSPECT DIRECT CLUTCH DISK

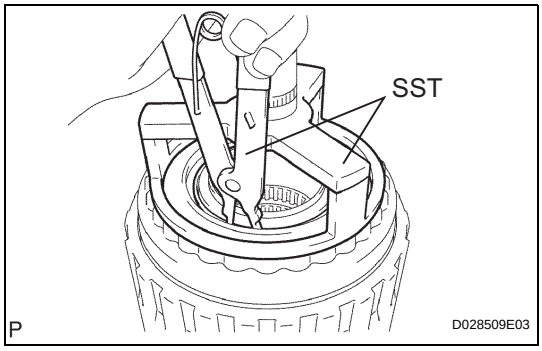

20. REMOVE NO. 3 CLUTCH BALANCER

(a) Place SST on the No. 3 clutch balancer, and compress the return spring with a press.
SST 09387-00070, 09350-30020 (09350-07070)

(b) Remove the snap ring.

AT

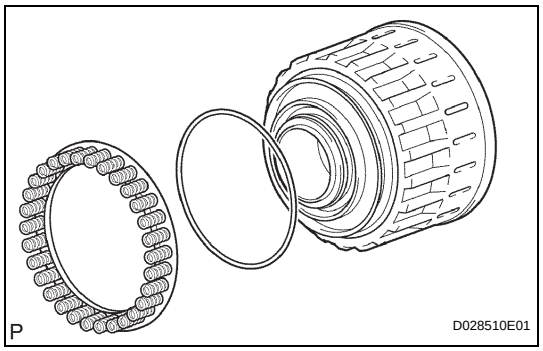

21. REMOVE REVERSE CLUTCH RETURN SPRING SUB-ASSEMBLY

(a) Remove the reverse clutch return spring and O-ring from the reverse clutch piston.

22. INSPECT REVERSE CLUTCH RETURN SPRING SUB-ASSEMBLY (See page AT-256)

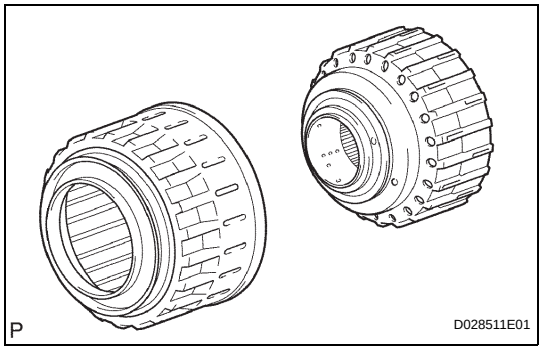

23. REMOVE REVERSE CLUTCH PISTON SUB-ASSEMBLY

(a) Remove the reverse clutch piston sub-assembly from the clutch drum sub-assembly.

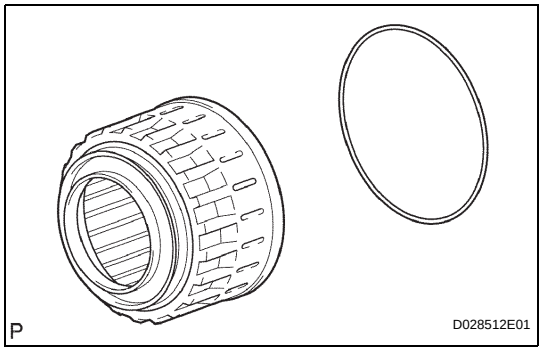

(b) Remove the O-ring from the reverse clutch piston sub-assembly.

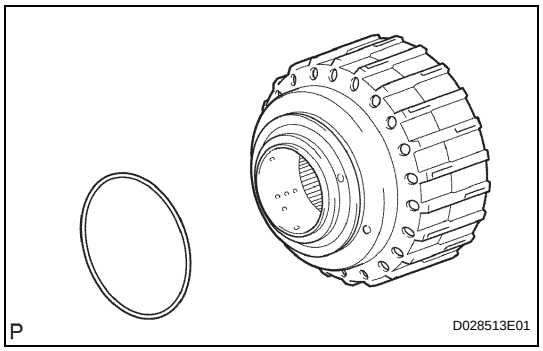

(c) Remove the O-ring from the clutch drum sub-assembly.

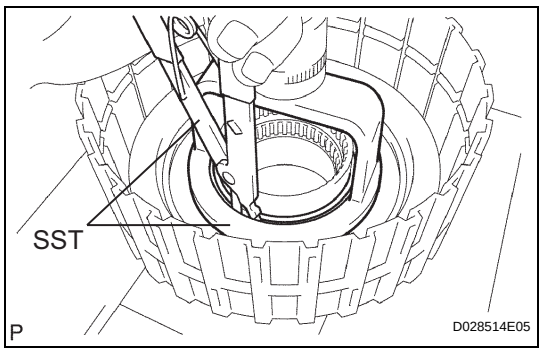

24. REMOVE DIRECT CLUTCH PISTON SUB-ASSEMBLY

(a) Place SST on the direct clutch piston, and compress the return spring with a press.
SST 09320-89010, 09350-30020 (09350-07070)

(b) Remove the snap ring.

AT

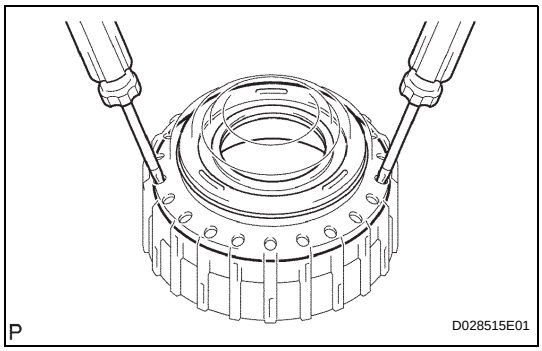

(c) Using 2 screwdrivers, remove the direct clutch piston sub-assembly from the clutch drum.

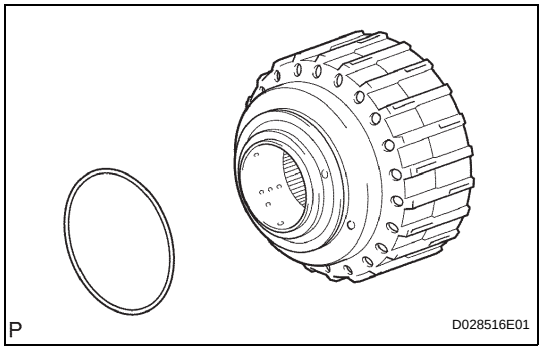

(d) Remove the O-ring from the clutch drum.

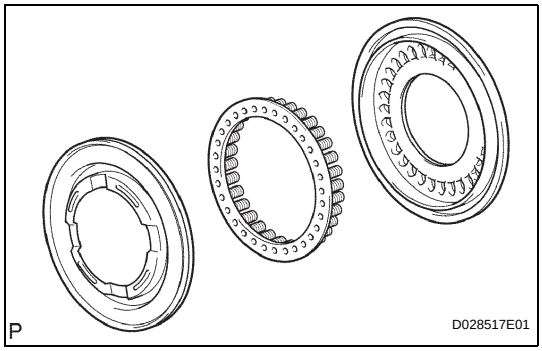

(e) Remove the No. 2 clutch balancer and direct clutch return spring sub-assembly from the direct clutch piston sub-assembly.

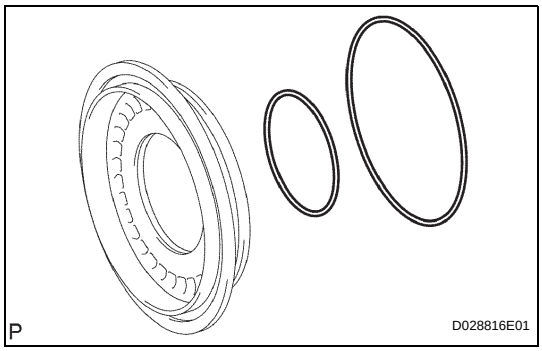

(f) Remove the 2 O-rings from the direct clutch piston sub-assembly.

25. INSPECT DIRECT CLUTCH RETURN SPRING SUB-ASSEMBLY (See page AT-256)

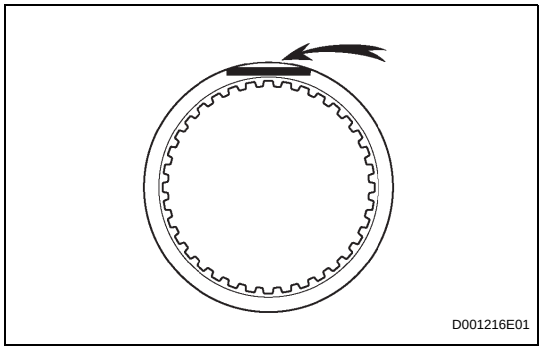

INSPECTION

1. INSPECT REAR CLUTCH DISC

(a) Replace all discs if one of the following problems is present: 1) a disc, plate or flange is worn or burnt, 2) the lining of a disc is peeled off or discolored, or 3) grooves or printed numbers have even slight damage.

NOTICE:

Before assembling new discs, soak them in ATF for at least 15 minutes.

AT

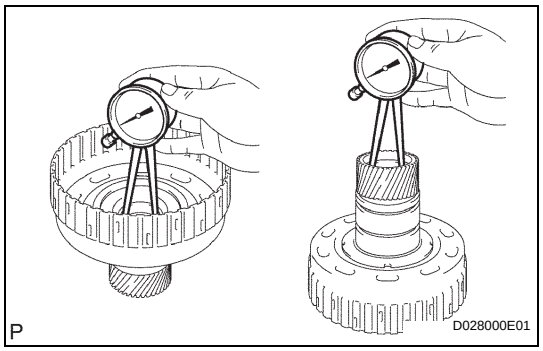

2. INSPECT REVERSE CLUTCH HUB SUB-ASSEMBLY

(a) Using a dial indicator, measure the inside diameter of the reverse clutch hub bushing.

Standard drum bushing:
35.812 to 35.837 mm (1.4099 to 1.4109 in.)
Maximum drum bushing:
35.887 mm (1.4129 in.)

If the inside diameter is greater than the maximum, replace the reverse clutch hub.

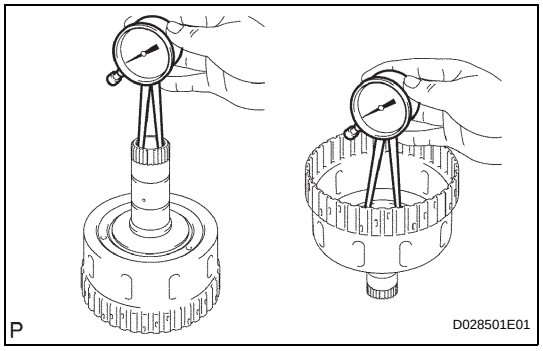

3. INSPECT FORWARD CLUTCH HUB SUB-ASSEMBLY

(a) Using a dial indicator, measure the inside diameter of the forward clutch hub bushing.

Standard drum bushing:
26.037 to 26. 062 mm (1.0251 to 1.0261 in.)
Maximum drum bushing:
26.112 mm (1.028 in.)

If the inside diameter is greater than the maximum, replace the forward clutch hub.

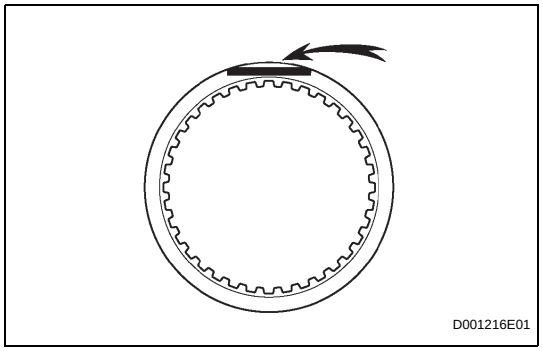

4. INSPECT FORWARD MULTIPLE DISC CLUTCH DISC

(a) Replace all discs if one of the following problems is present: 1) a disc, plate or flange is worn or burnt, 2) the lining of a disc is peeled off or discolored, or 3) grooves or printed numbers have even slight damage.

NOTICE:
Before assembling new discs, soak them in ATF for at least 15 minutes.

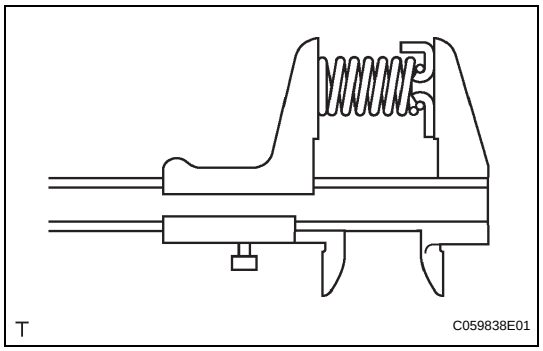

5. INSPECT FORWARD CLUTCH RETURN SPRING SUB-ASSEMBLY

(a) Using vernier calipers, measure the free length of the spring together with the spring seat.

Standard free length:
26.74 mm (1.053 in.)

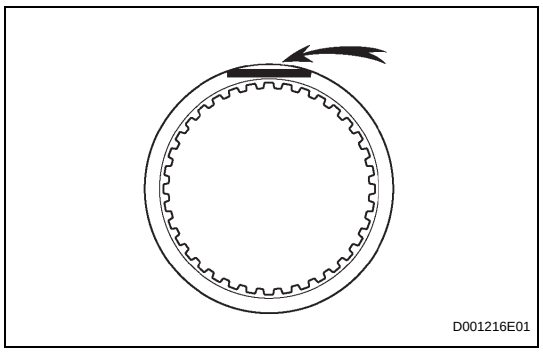

6. INSPECT DIRECT CLUTCH DISK

(a) Replace all discs if one of the following problems is present: 1) a disc, plate or flange is worn or burnt, 2) the lining of a disc is peeled off or discolored, or 3) grooves or printed numbers have even slight damage.

NOTICE:
Before assembling new discs, soak them in ATF for at least 15 minutes.

AT

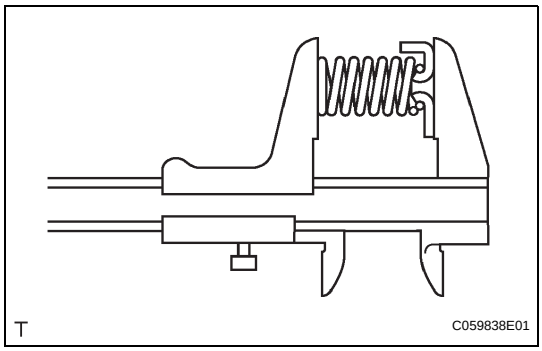

7. INSPECT REVERSE CLUTCH RETURN SPRING SUB-ASSEMBLY

(a) Using vernier calipers, measure the free length of the spring together with the spring seat.

Standard free length:

21.04 mm (0.828 in.)

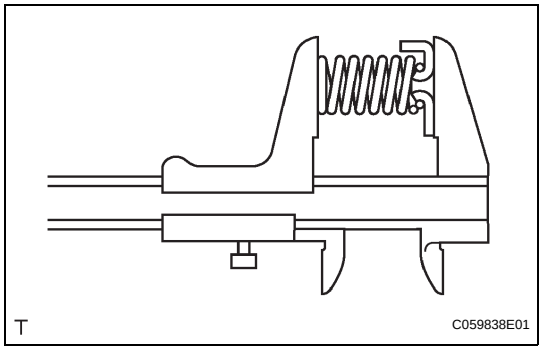

8. INSPECT DIRECT CLUTCH RETURN SPRING SUB-ASSEMBLY

(a) Using vernier calipers, measure the free length of the spring together with the spring seat.

Standard free length:

19.51 mm (0.768 in.)

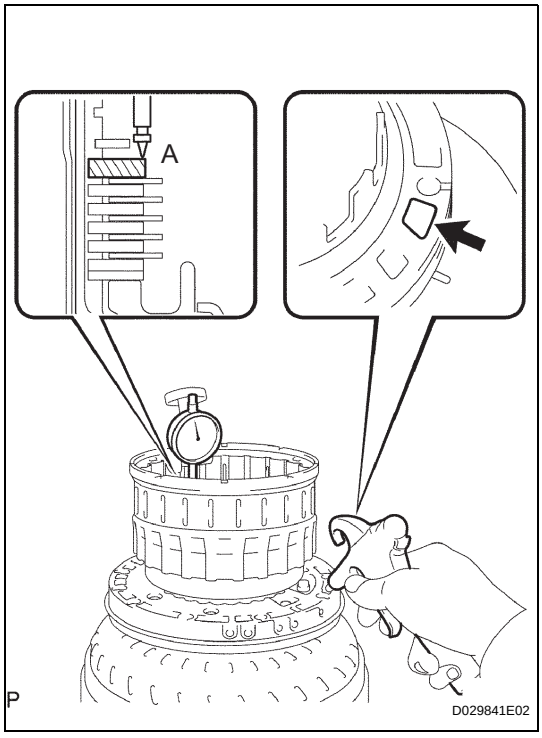

9. INSPECT PACK CLEARANCE OF DIRECT CLUTCH

(a) Using a dial gauge, measure the moving distance (distance A) of the clutch flange at both ends across a diameter while blowing air from the oil hole as shown in the illustration, and calculate the average.

Pack clearance:

0.5 to 0.8 mm (0.020 to 0.032 in.)

NOTICE:

Install a selective flange (3.4 mm (0.134 in.)) when measuring the moving distance (shaded area in the illustration).

HINT:

Flange moving distance A = 0.26 to 1.14 mm (0.010 to 0.045 in.)

Pack clearance = Flange moving distance A - 0.05 mm (0.002 in.)

(b) If the pack clearance is outside the standard, select and install a clutch flange that makes the pack clearance within the standard.

Flange thickness

No.	Thickness	No.	Thickness
0	3.0 mm (0.118 in.)	5	3.5 mm (0.138 in.)
1	3.1 mm (0.122 in.)	6	3.6 mm (0.142 in.)
2	3.2 mm (0.126 in.)	7	3.7 mm (0.146 in.)
3	3.3 mm (0.130 in.)	8	3.8 mm (0.150 in.)
4	3.4 mm (0.134 in.)	-	-

AT

10. INSPECT PACK CLEARANCE OF REVERSE CLUTCH

(a) Using a dial gauge, measure the reverse clutch piston stroke (distance A) and the moving distance (distance B) of the reverse flange at the both ends across a diameter while blowing air (392 kPa, 4 kgf/cm^2, 57 psi) from the oil hole as shown in the illustration, and calculate the average.

Pack clearance:

0.5 to 0.8 mm (0.020 to 0.032 in.)

NOTICE:

Install a selective flange (3.3 mm (0.130 in.)) when measuring the moving distance (shaded area in the illustration).

HINT:

Piston stroke A = 1.05 to 2.15 mm (0.041 to 0.085 in.)

Flange moving distance B = 0.72 to 1.08 mm (0.029 to 0.043 in.)

Pack clearance = Piston stroke A - Flange moving distance B - 0.06 mm (0.002 in.)

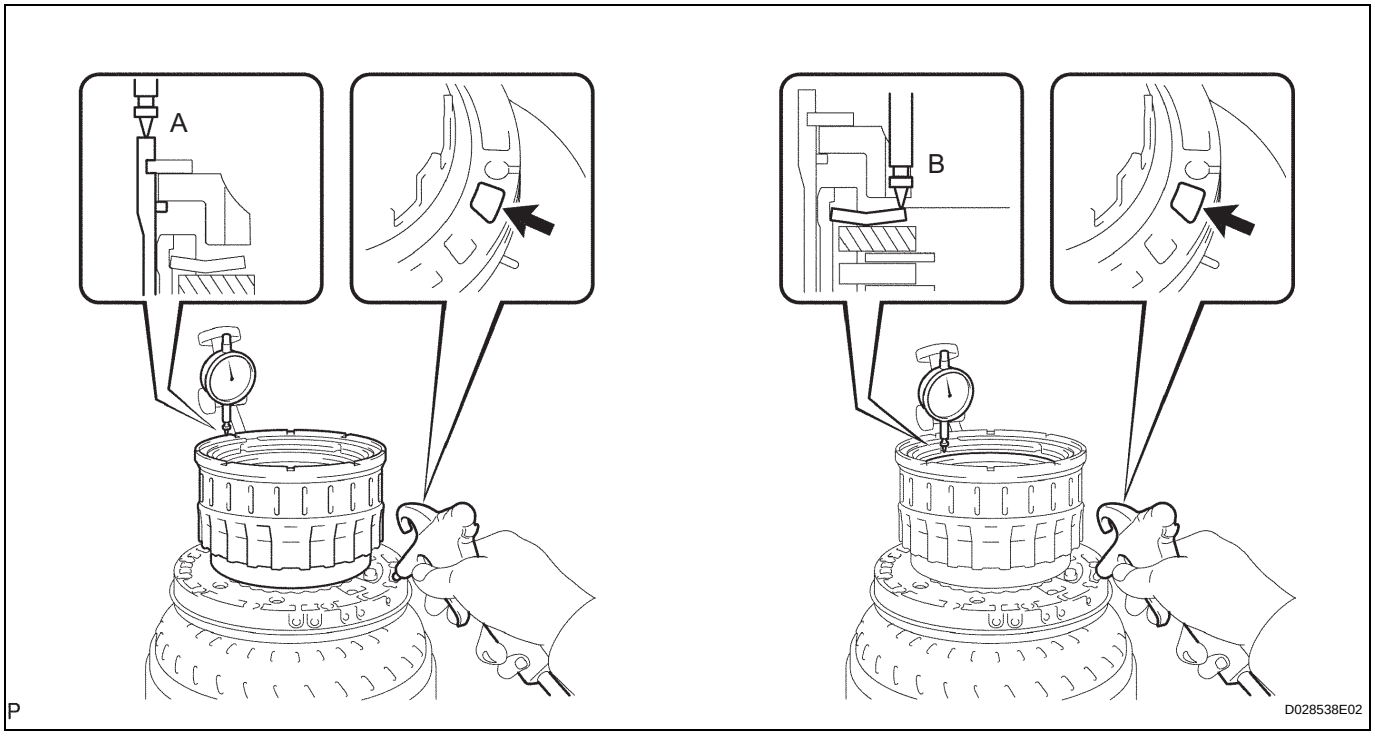

(b) If the pack clearance is outside the standard, select and install a clutch flange that makes the pack clearance within the standard.

Flange thickness

No.	Thickness	No.	Thickness
0	2.8 mm (0.110 in.)	6	3.4 mm (0.134 in.)
1	2.9 mm (0.114 in.)	7	3.5 mm (0.138 in.)
2	3.0 mm (0.118 in.)	8	3.6 mm (0.142 in.)
3	3.1 mm (0.122 in.)	9	3.7 mm (0.146 in.)
4	3.2 mm (0.126 in.)	A	3.8 mm (0.150 in.)
5	3.3 mm (0.130 in.)		-

AT

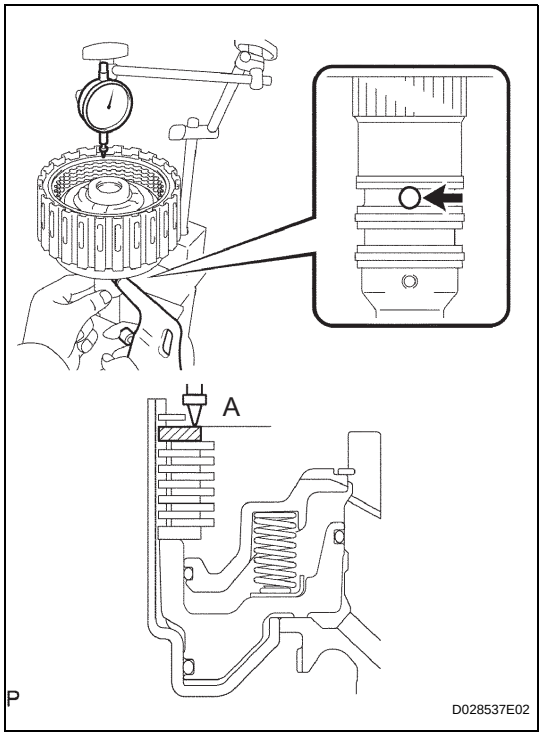

11. INSPECT PACK CLEARANCE OF FORWARD CLUTCH

(a) Using a dial gauge, measure the moving distance (distance A) of the clutch flange at boths end across a diameter while blowing air from the oil hole as shown in the illustration, and calculate the average.

Pack clearance:

0.6 to 0.9 mm (0.024 to 0.035 in.)

NOTICE:

Install a selective flange (3.4 mm (0.134 in.)) when measuring the moving distance (shaded area in the illustration).

HINT:

Flange moving distance A = 0.26 to 1.36 mm (0.010 to 0.054 in.)

Pack clearance = Flange moving distance A - 0.01 mm (0.0003 in.)

(b) If the pack clearance is outside the standard, select and install a clutch flange that makes the pack clearance within the standard.

Flange thickness

No.	Thickness	No.	Thickness
0	3.0 mm (0.118 in.)	6	3.6 mm (0.142 in.)
1	3.1 mm (0.122 in.)	7	3.7 mm (0.146 in.)
2	3.2 mm (0.126 in.)	8	3.8 mm (0.150 in.)
3	3.3 mm (0.130 in.)	9	3.9 mm (0.154 in.)
4	3.4 mm (0.134 in.)	A	4.0 mm (0.158 in.)
5	3.5 mm (0.138 in.)		-

REASSEMBLY

1. INSTALL DIRECT CLUTCH PISTON SUB-ASSEMBLY

(a) Coat 2 new O-rings with ATF, and install them onto the direct clutch piston.

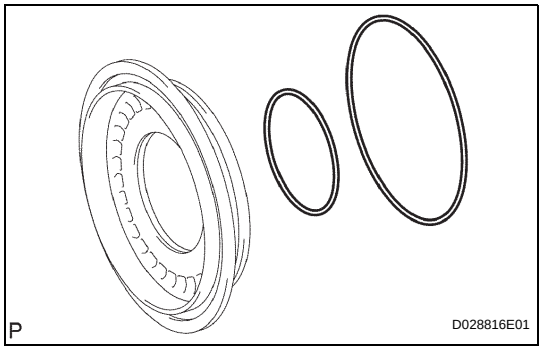

(b) Install the No. 2 clutch balancer and direct clutch return spring onto the direct clutch piston sub-assembly.

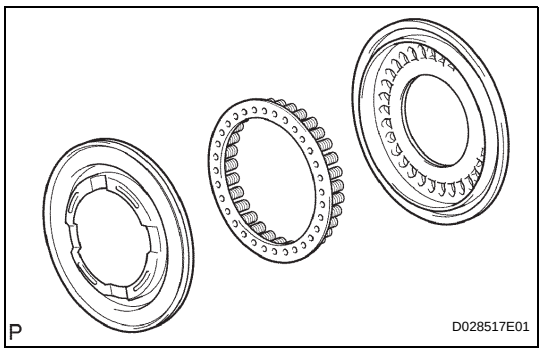

AT

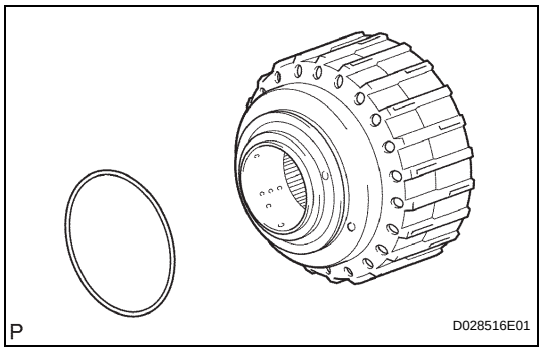

(c) Coat a new O-ring with ATF, and install them onto the clutch drum sub-assembly.
(d) Be careful not to damage the O-rings. Press in the direct clutch piston into the clutch drum with both hands.

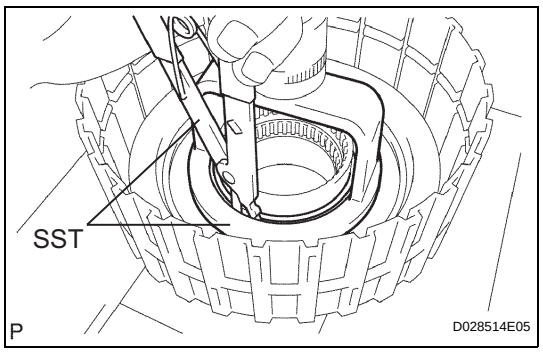

(e) Place SST on the direct clutch piston, and compress the return spring with a press.
SST 09320-89010, 09350-30020 (09350-07070)
(f) Install the snap ring with a snap ring expander.
NOTICE:
- **Make sure that the end gap of the snap ring is not aligned with the spring retainer claw.**
- **Stop pressing when the spring seat is lowered to the place 1 to 2 mm (0.039 to 0.078 in.) from the snap ring groove to prevent the spring seat from being deformed.**
- **Do not expand the snap ring excessively.**

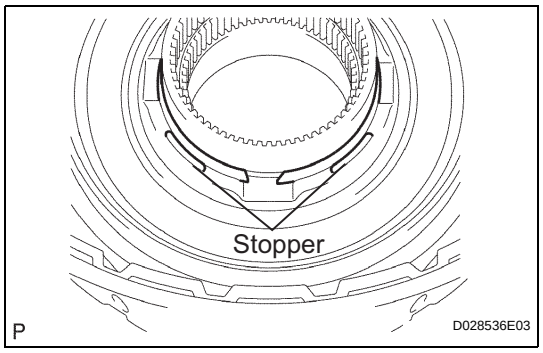

(g) Set the end gap of the snap ring in the piston as shown in the illustration.

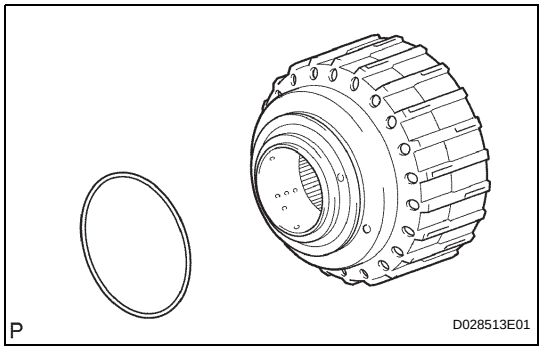

2. INSTALL REVERSE CLUTCH PISTON SUB-ASSEMBLY
(a) Coat a new O-ring with ATF, and install it onto the clutch drum sub-assembly.

AT

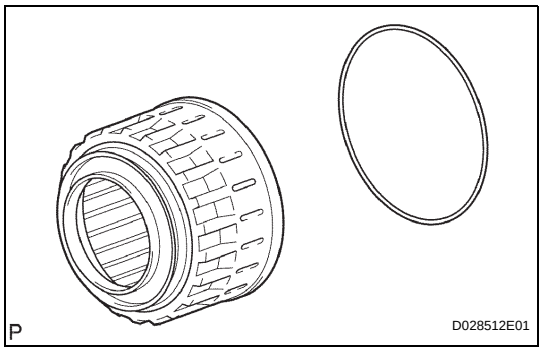

(b) Coat a new O-ring with ATF, and install it onto the reverse clutch piston sub-assembly.

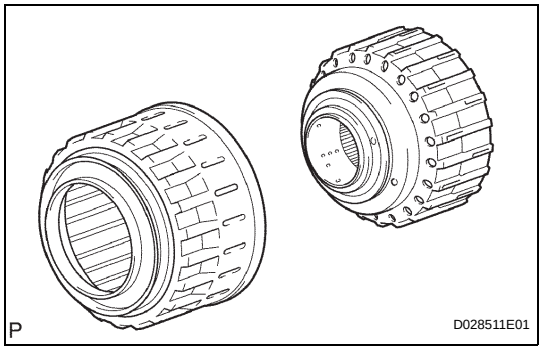

(c) Be careful not to damage the O-ring. Press in the clutch drum sub-assembly into the reverse clutch piston with both hands.

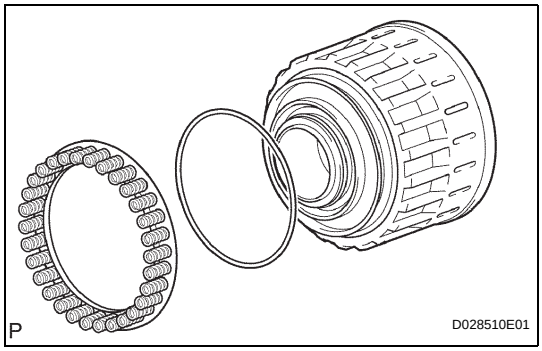

3. INSTALL REVERSE CLUTCH RETURN SPRING SUB-ASSEMBLY

(a) Coat a new O-ring with ATF, and install it onto the reverse clutch piston sub-assembly.

(b) Install the reverse clutch return spring onto the reverse clutch piston sub-assembly.

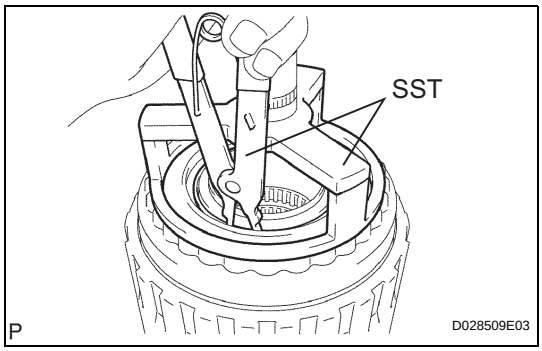

4. INSTALL NO. 3 CLUTCH BALANCER

(a) Place SST on the No. 3 clutch balancer, and compress the return spring with a press.
SST 09387-00070, 09350-30020 (09350-07070)

(b) Install the snap ring with a snap ring expander.

(c) Make sure that the end gap of the snap ring is not aligned with the spring retainer claw.
NOTICE:
- **Stop pressing when the spring seat is lowered to the place 1 to 2 mm (0.039 to 0.078 in.) from the snap ring groove to prevent the spring seat from being deformed.**
- **Do not expand the snap ring excessively.**

AT

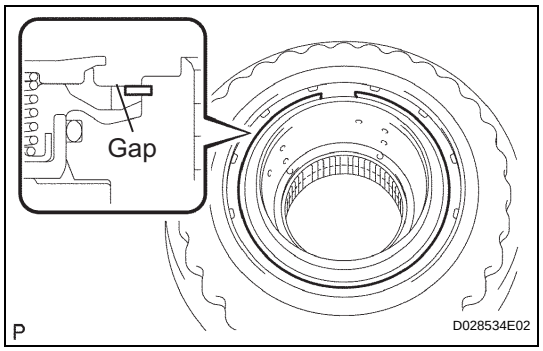

(d) Set the end gap of the snap ring in the piston as shown in the illustration.

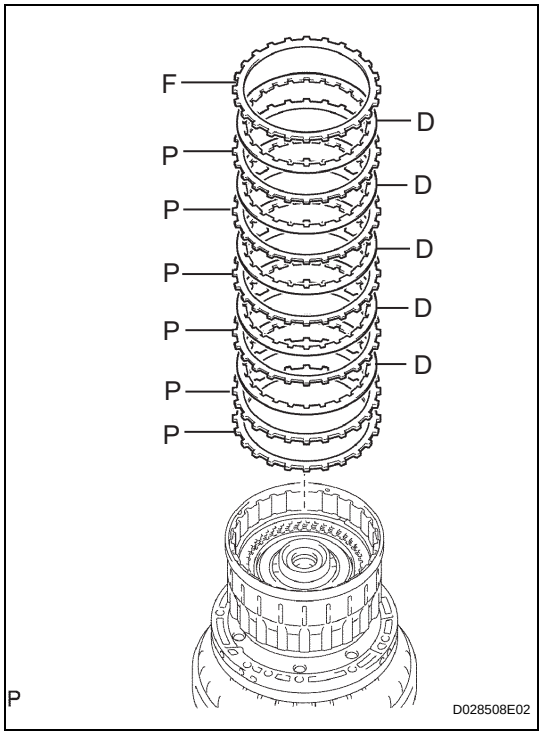

5. INSTALL DIRECT CLUTCH DISK

(a) Install the reverse clutch flange, 6 plates and 5 discs onto the clutch drum sub-assembly.
Install in order:
P - P - D - P - D - P - D - P - D - P - D - F
HINT:
P = Plate, D = Disc, F = Flange

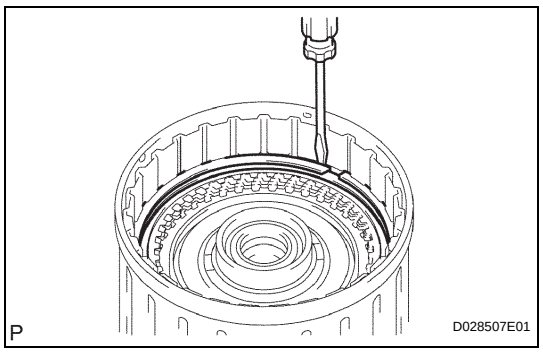

(b) Using a screwdriver, install the 2 hole snap rings onto the clutch drum sub-assembly.

6. INSPECT PACK CLEARANCE OF DIRECT CLUTCH (See page AT-256)

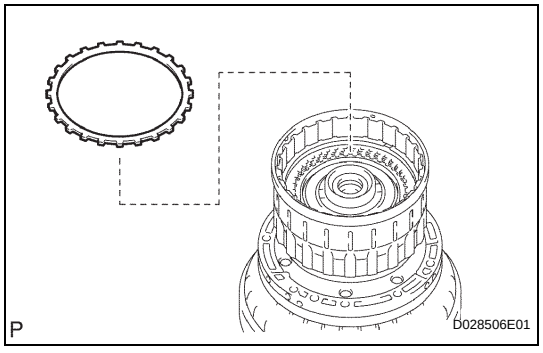

7. INSTALL REVERSE CLUTCH FLANGE

(a) Install the reverse clutch flange onto the clutch drum sub-assembly.

AT

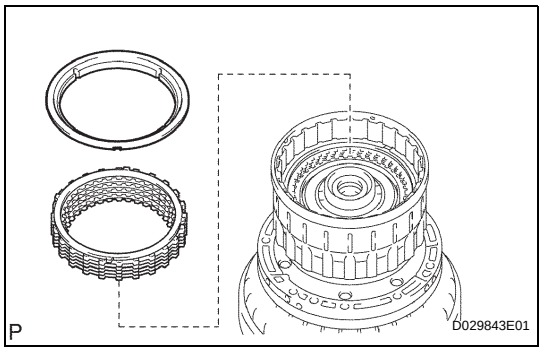

8. INSTALL REVERSE CLUTCH REACTION SLEEVE

(a) Install the reverse clutch reaction sleeve, clutch cushion plate, reverse clutch flange, 5 reverse clutch discs, and 4 clutch plates onto the reverse clutch hub.

(b) Using a screwdriver, install the hole snap ring.

9. INSPECT PACK CLEARANCE OF REVERSE CLUTCH (See page AT-257)

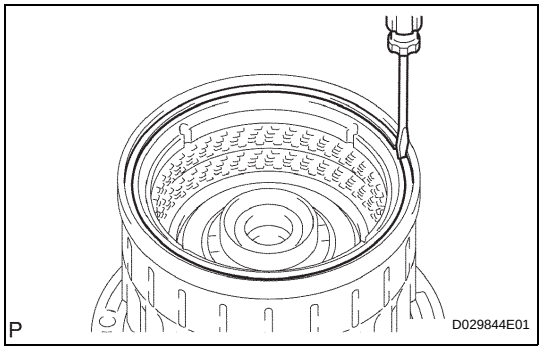

10. REMOVE REVERSE CLUTCH REACTION SLEEVE

(a) Using a screwdriver, remove the snap ring from the clutch drum assembly.

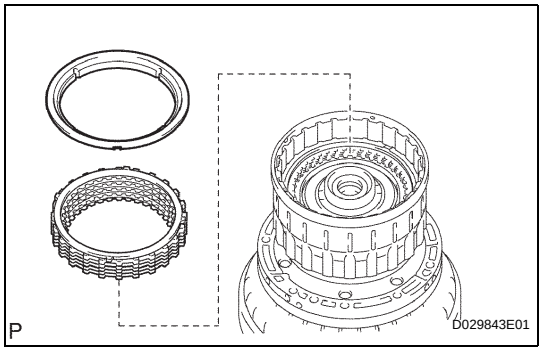

(b) Remove the reverse clutch reaction sleeve, clutch cushion plate, reverse clutch flange, 5 reverse clutch discs, and 4 clutch plates from the reverse clutch hub sub-assembly.

AT

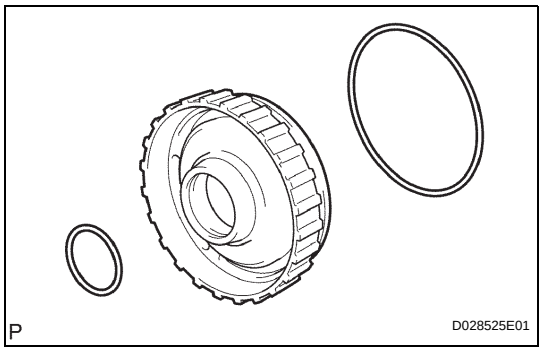

11. INSTALL FORWARD CLUTCH PISTON

(a) Coat 2 new O-rings with ATF, and install them onto the No. 1 forward clutch piston.

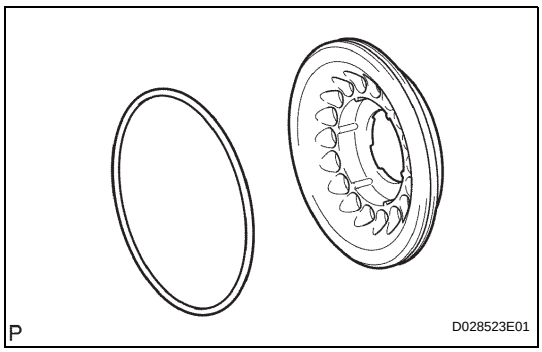

12. INSTALL NO. 1 CLUTCH BALANCER

(a) Coat a new O-ring with ATF and install it onto the clutch balancer.

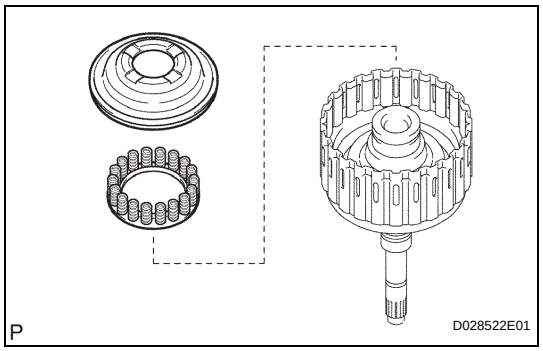

(b) Install the No. 1 clutch balancer and forward clutch return spring sub-assembly.
NOTICE:
Be careful not to damage the O-ring.

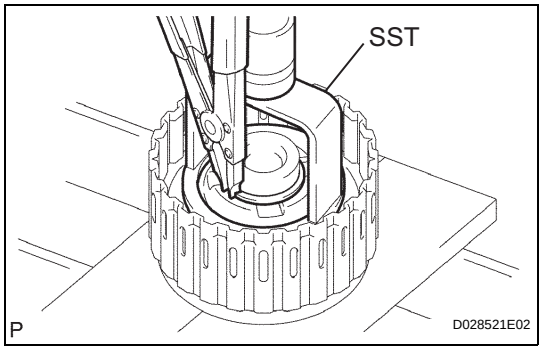

(c) Place SST on the No. 1 clutch balancer, and compress the return spring with a press.
SST 09350-30020 (09350-07040, 09350-07070)
(d) Install the snap ring with a snap ring expander.
(e) Make sure that the end gap of the snap ring is not aligned with the spring retainer claw.
NOTICE:
- **Stop pressing when the spring seat is lowered to the place 1 to 2 mm (0.039 to 0.078 in.) from the snap ring groove to prevent the spring seat from being deformed.**
- **Do not expand the snap ring excessively.**

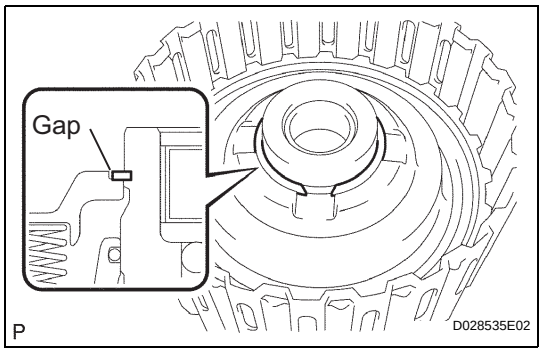

(f) Set the end gap of the snap ring in the piston as shown in the illustration.

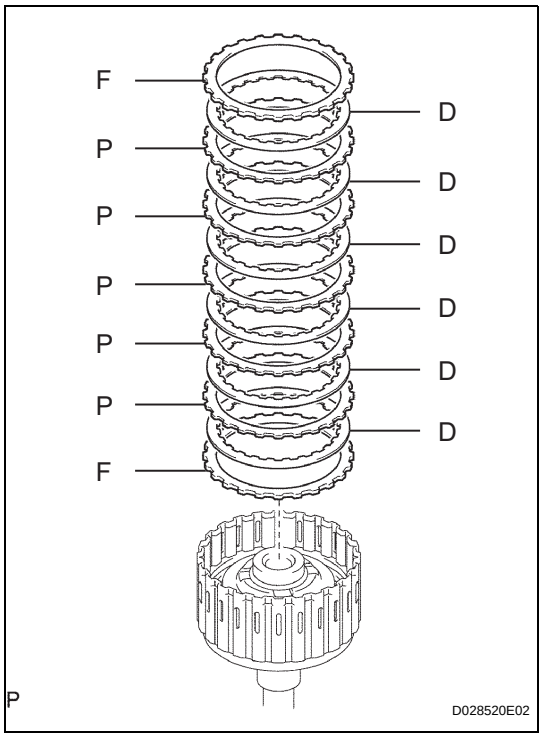

13. INSTALL FORWARD MULTIPLE DISC CLUTCH DISC

(a) Install the 2 flanges, 6 discs and 5 plates onto the input shaft assembly.

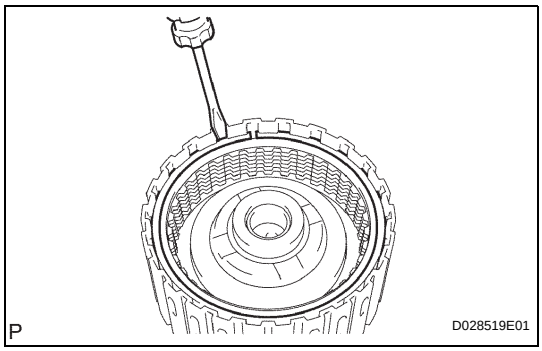

(b) Install in order:

F- D - P - D - P - D - P - D - P - D - P - D - F

HINT:

P = Plate, D = Disc, F = Flange

Using a screwdriver, install the hole snap ring.

AT

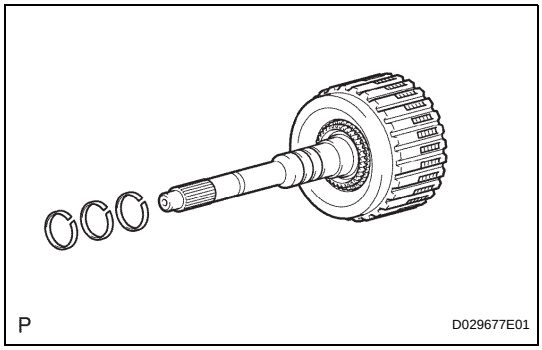

14. INSTALL INPUT SHAFT OIL SEAL RING

(a) Coat the 3 oil seal rings with ATF.

(b) Put together the ends of the 3 oil seal rings together, and then install them onto the stator shaft groove.

NOTICE:

Do not over-widen the ring ends.

HINT:

After installing the oil seal rings, check that they rotate smoothly.

15. INSPECT PACK CLEARANCE OF FORWARD CLUTCH (See page AT-258)

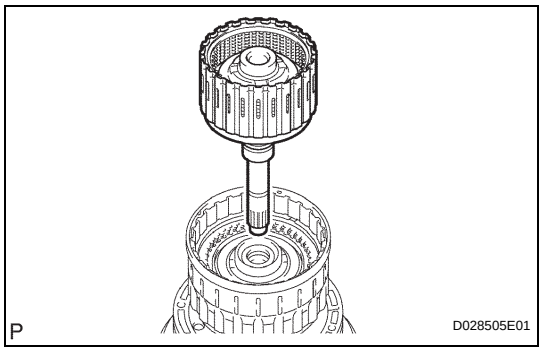

16. INSTALL INPUT SHAFT ASSEMBLY

(a) Install the input shaft assembly onto the clutch drum.

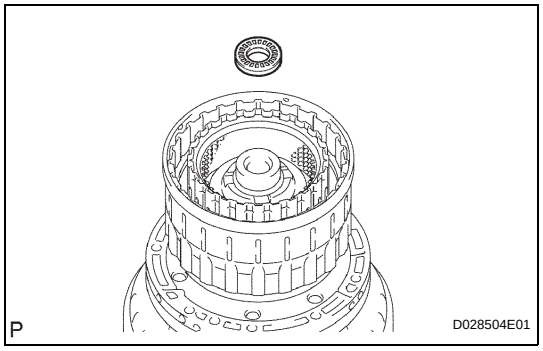

(b) Install the thrust needle roller bearing onto the clutch drum assembly.

Thrust needle roller bearing diameter

Item	Inside	Outside
Thrust needle roller bearing	21.3 mm (0.839 in.)	41.1 mm (1.618 in.)

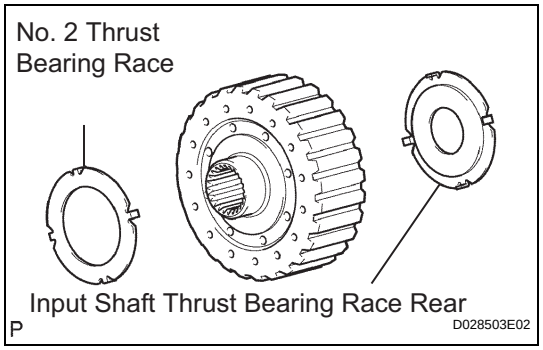

17. INSTALL MULTIPLE DISC CLUTCH HUB

(a) Install the No. 2 thrust bearing race and input shaft thrust bearing race rear onto the multiple disc clutch hub.

Bearing and race diameter

Item	Inside	Outside
Thrust bearing race No. 2	38.4 mm (1.512 in.)	63.0 mm (2.480 in.)
Input shaft bearing race RR	22.6 mm (0.890 in.)	60.0 mm (2.362 in.)

AT

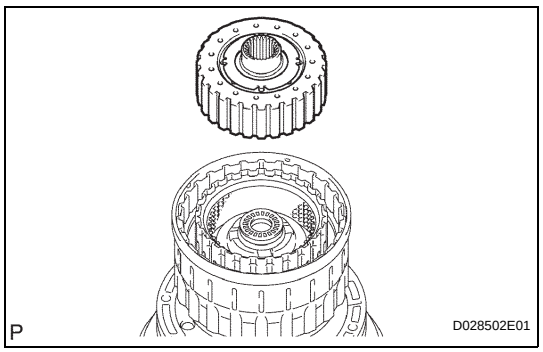

(b) Install the multiple disc clutch hub into the clutch drum assembly.

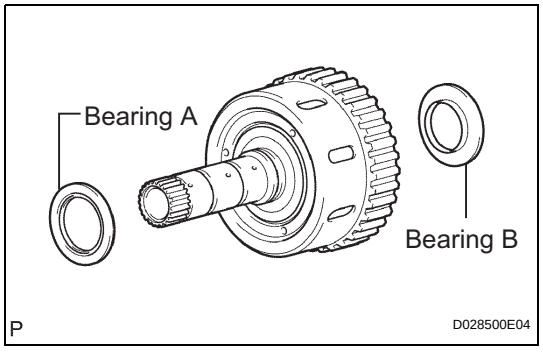

18. INSTALL FORWARD CLUTCH HUB SUB-ASSEMBLY

(a) Install the 2 thrust needle roller bearings onto the forward clutch hub sub-assembly.

Bearing and race diameter

Item	Inside	Outside
Bearing A	42.5 mm (1.673 in.)	61.2 mm (2.409 in.)
Bearing B	33.3 mm (1.311 in.)	56.6 mm (2.228 in.)

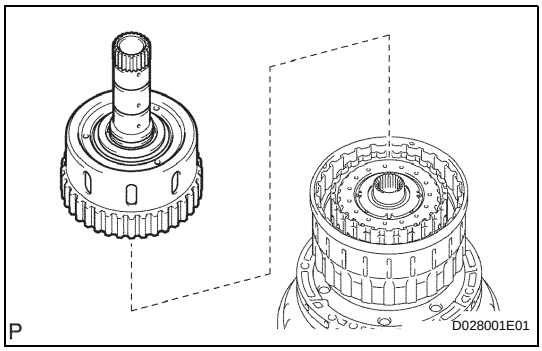

(b) Install the forward clutch hub sub-assembly onto the clutch drum assembly.

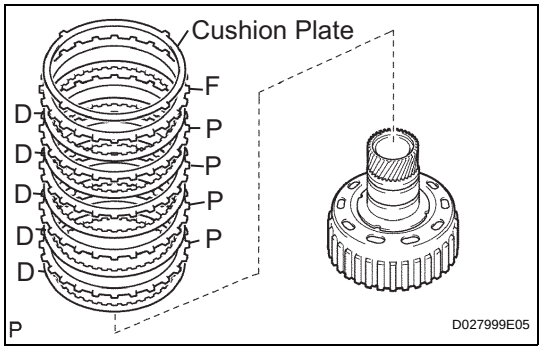

19. INSTALL REAR CLUTCH DISC

(a) Install the clutch cushion plate, reverse clutch flange, 4 plates and 5 discs onto the reverse clutch hub.

Install in order:

D - P - D - P - D - P - D - P - D - F

HINT:

P = Plate, D = Disc, F = Flange

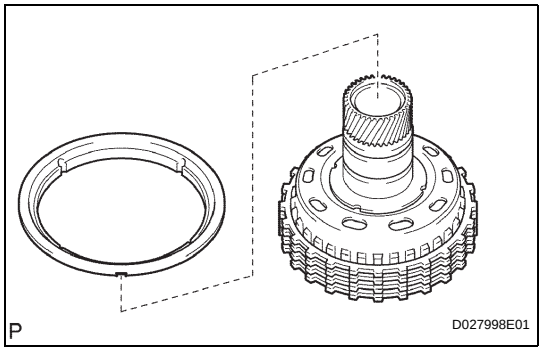

20. INSTALL REVERSE CLUTCH REACTION SLEEVE

(a) Install the reverse clutch reaction sleeve onto the reverse clutch hub.

AT

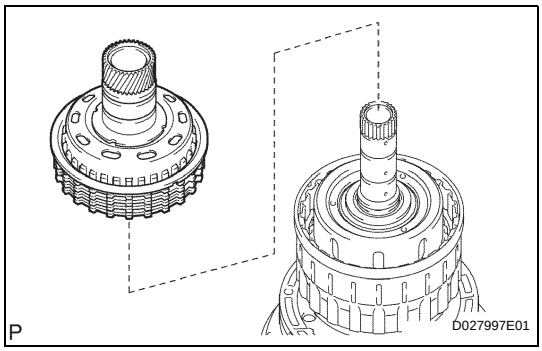

21. INSTALL REVERSE CLUTCH HUB SUB-ASSEMBLY

(a) Install the reverse clutch hub sub-assembly, reverse clutch reaction sleeve, clutch cushion plate, reverse clutch flange, 5 reverse clutch discs, and 4 clutch plates onto the clutch drum assembly.

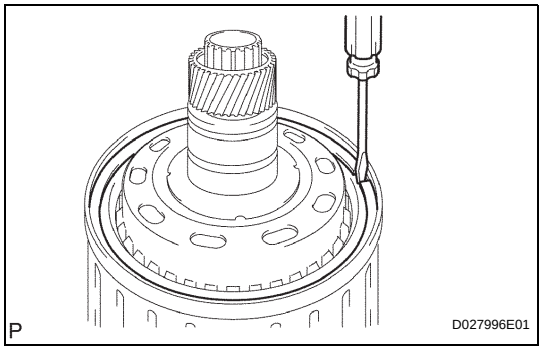

(b) Using a screwdriver, install the snap ring onto the clutch drum and input shaft assembly.

VALVE BODY

COMPONENTS

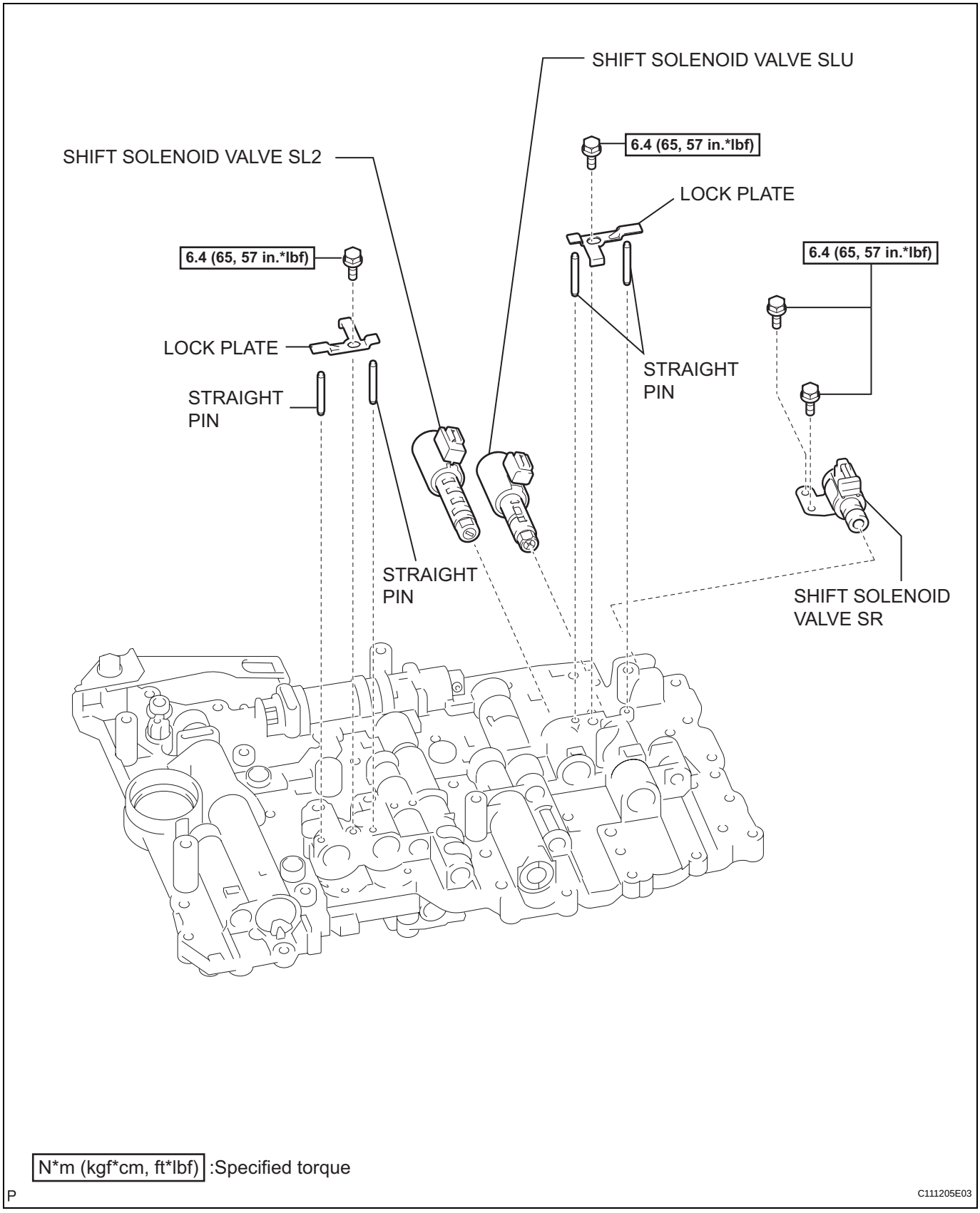

AT

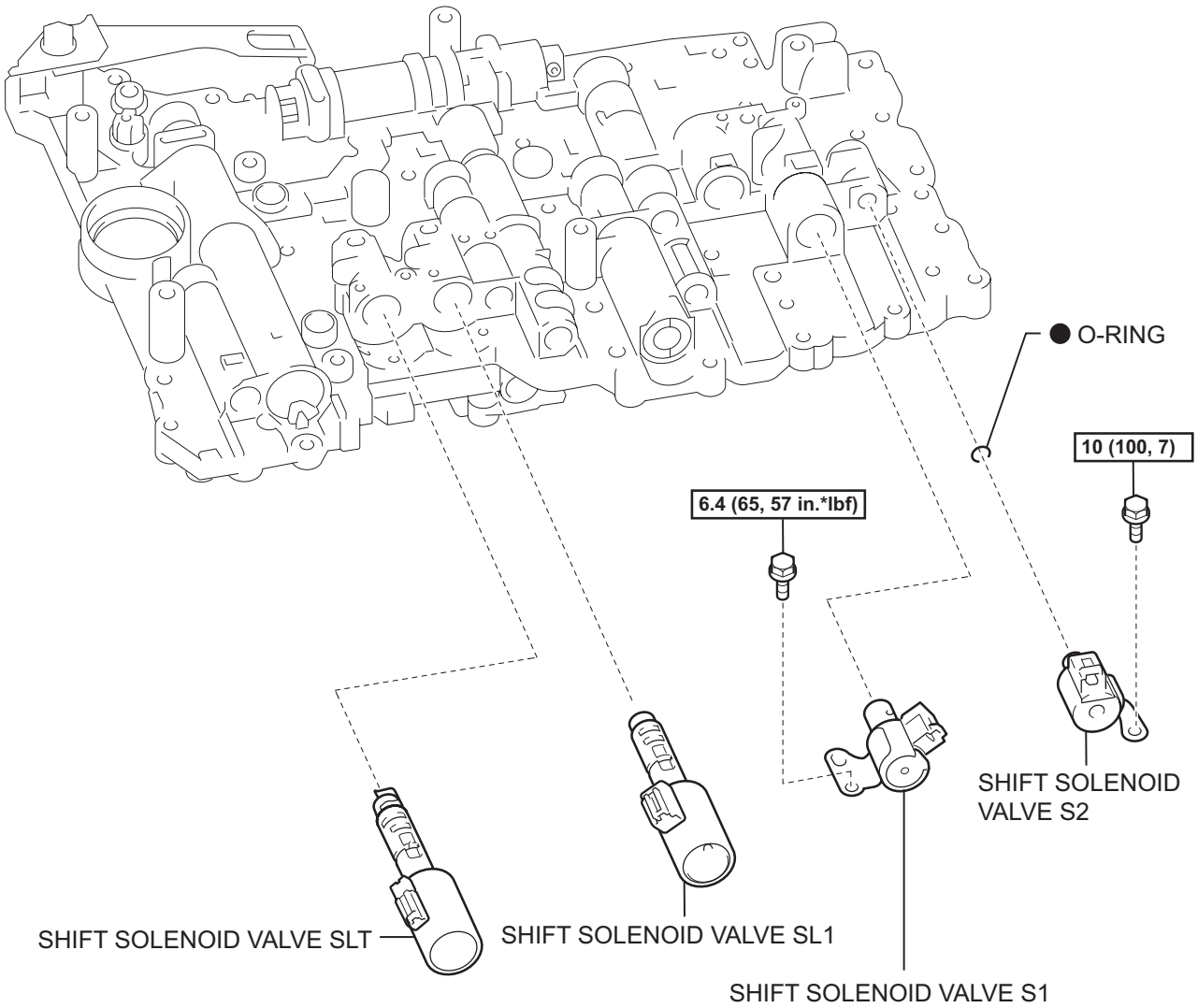

AT

N*m (kgf*cm, ft*lbf) :Specified torque

● Non-reusable part

P

C111206E03

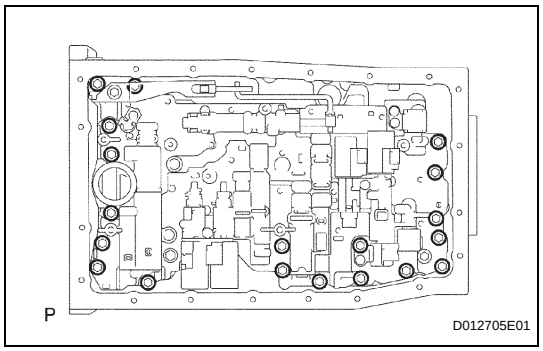

DISASSEMBLY

1. REMOVE TRANSMISSION VALVE BODY ASSEMBLY

(a) Remove the 19 bolts.

(b) Remove the valve body assembly.

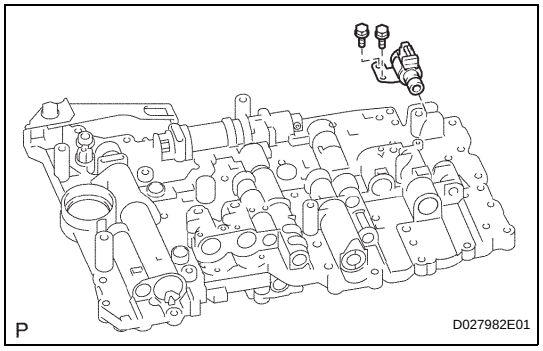

2. REMOVE SHIFT SOLENOID VALVE SR

(a) Remove the 2 bolts and the shift solenoid valve SR.

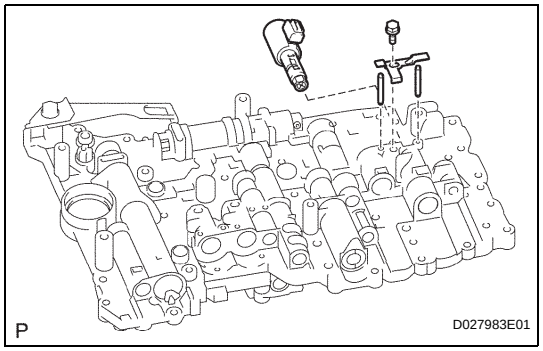

3. REMOVE SHIFT SOLENOID VALVE SLU

(a) Remove the bolt, 2 straight pins and the solenoid lock plate.

(b) Remove the shift solenoid valve SLU.

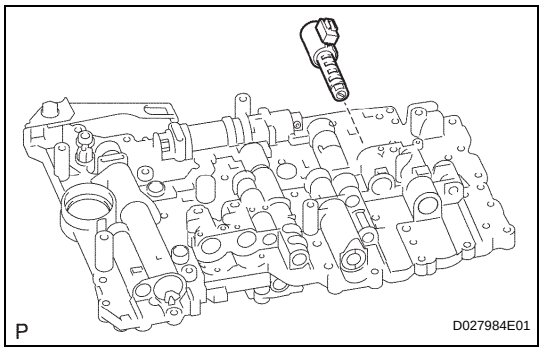

4. REMOVE SHIFT SOLENOID VALVE SL2

(a) Remove the shift solenoid valve SL2.

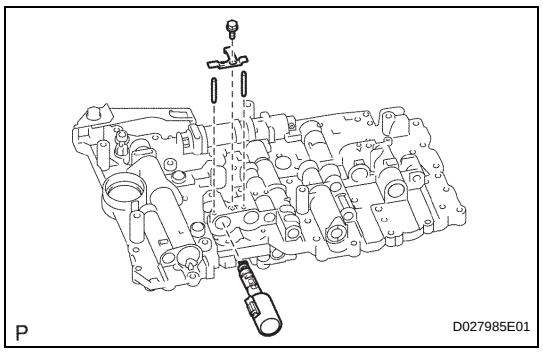

5. REMOVE SHIFT SOLENOID VALVE SLT

(a) Remove the bolt, 2 straight pins and the solenoid lock plate.

(b) Remove the shift solenoid valve SLT.

AT

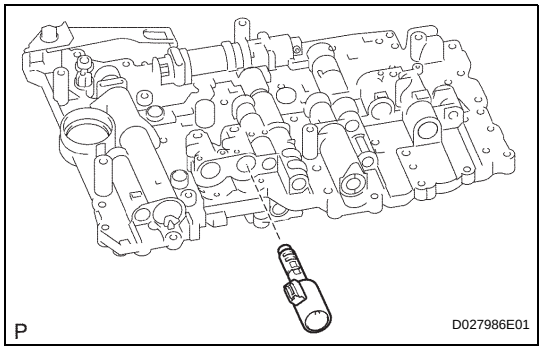

6. REMOVE SHIFT SOLENOID VALVE SL1

(a) Remove the shift solenoid valve SL1.

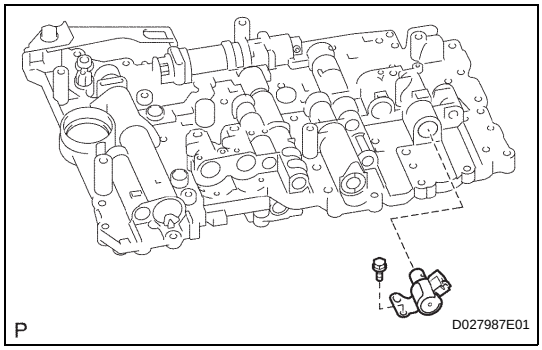

7. REMOVE SHIFT SOLENOID VALVE S1

(a) Remove the bolt and the shift solenoid valve S1.

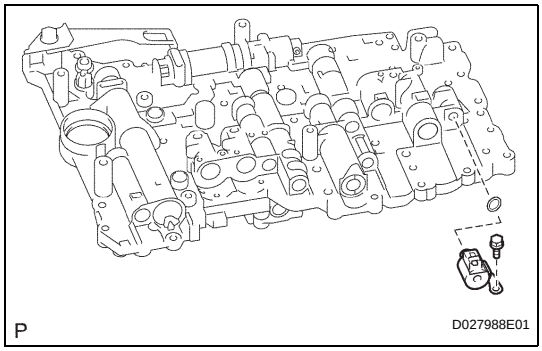

8. REMOVE SHIFT SOLENOID VALVE S2

(a) Remove the bolt and the shift solenoid valve S2.
(b) Remove the O-ring from the shift solenoid valve S2.

AT

REASSEMBLY

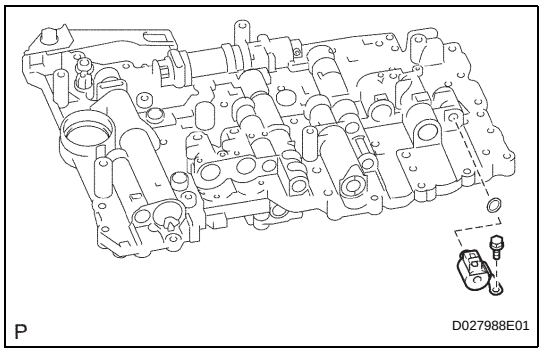

1. INSTALL SHIFT SOLENOID VALVE S2

(a) Install a new O-ring onto the shift solenoid valve S2.
(b) Install the shift solenoid valve S2 with the bolt.
Torque: 10 N*m (100 kgf*cm, 7 ft.*lbf)

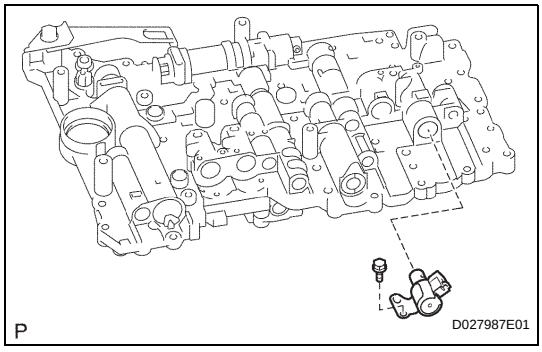

2. INSTALL SHIFT SOLENOID VALVE S1

(a) Install the shift solenoid valve S1 with the bolt.
Torque: 6.4 N*m (65 kgf*cm, 57 in.*lbf)

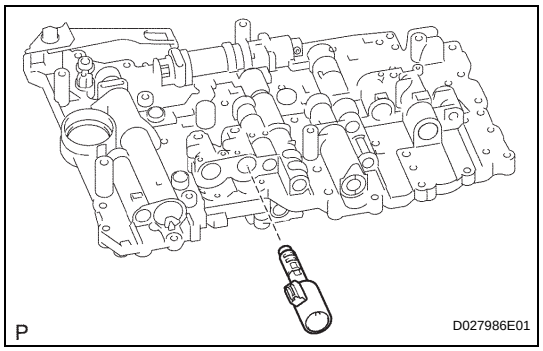

3. INSTALL SHIFT SOLENOID VALVE SL1

(a) Install the shift solenoid valve SL1.

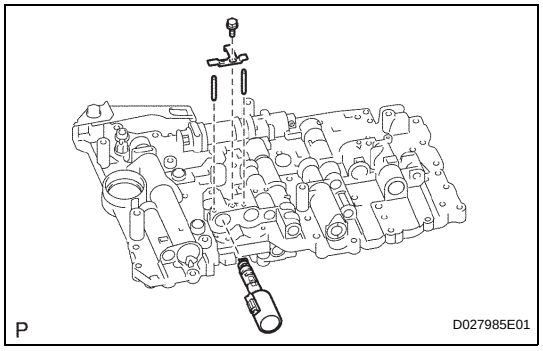

4. INSTALL SHIFT SOLENOID VALVE SLT

(a) Install the shift solenoid valve SLT.

(b) Install the bolt, 2 straight pins and solenoid lock plate.

Torque: 6.4 N*m (65 kgf*cm, 57 in.*lbf)

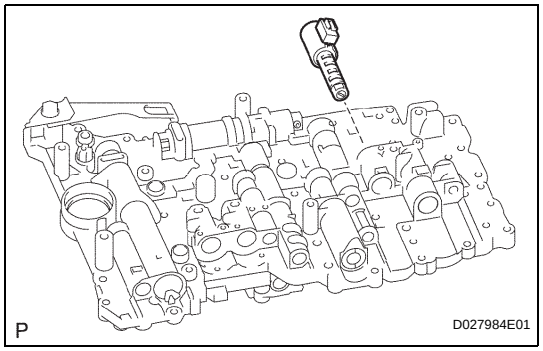

5. INSTALL SHIFT SOLENOID VALVE SL2

(a) Install the shift solenoid valve SL2.

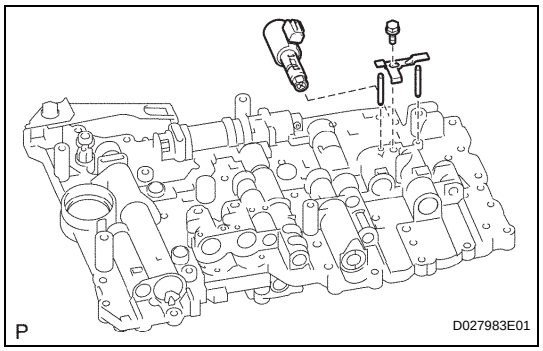

6. INSTALL SHIFT SOLENOID VALVE SLU

(a) Install the shift solenoid valve SLU.

(b) Install the bolt, 2 straight pins and the solenoid lock plate.

Torque: 6.4 N*m (65 kgf*cm, 57 in.*lbf)

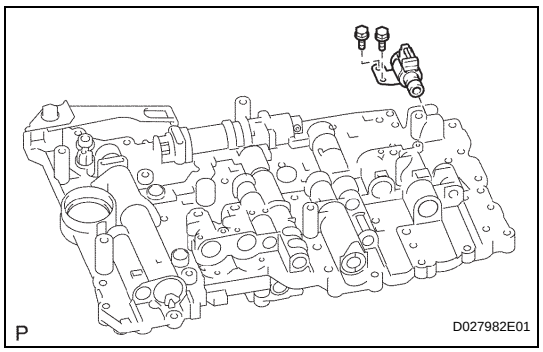

7. INSTALL SHIFT SOLENOID VALVE SR

(a) Install the shift solenoid valve SR with the 2 bolts.

Torque: 6.4 N*m (65 kgf*cm, 57 in.*lbf)

AT

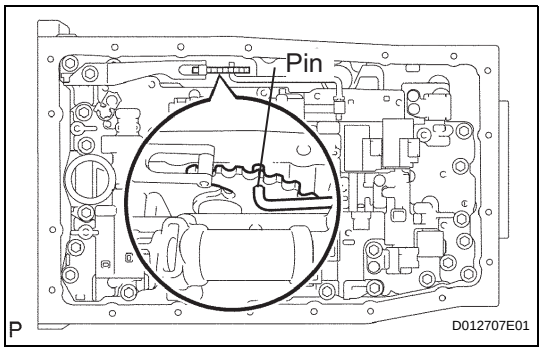

8. INSTALL TRANSMISSION VALVE BODY ASSEMBLY

(a) Align the groove of the manual valve with the pin of the lever.

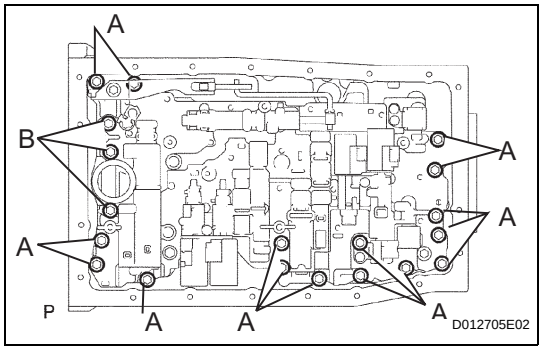

(b) Install the 19 bolts.
Torque: 11 N*m (112 kgf*cm, 8 ft.*lbf)
HINT:
Bolt length:
25 mm (0.98 in.) for bolt A
36 mm (1.42 in.) for bolt B

AUTOMATIC TRANSMISSION SYSTEM

PRECAUTION

1. PRECAUTION

NOTICE:

- **Perform the RESET MEMORY (AT initialization) when replacing the automatic transmission assembly, engine assembly or ECM (See page AT-19).**
- **Perform the REGISTRATION (VIN registration) when replacing the ECM (See page ES-15).**
- **Re-set the function of the ATF (Automatic Transmission Fluid) temperature warning light, if the ECM has been replaced or RESET MEMORY (AT initialization) has been performed (See page AT-19).**

HINT:

RESET MEMORY cannot be completed by only disconnecting the negative cable from the battery.

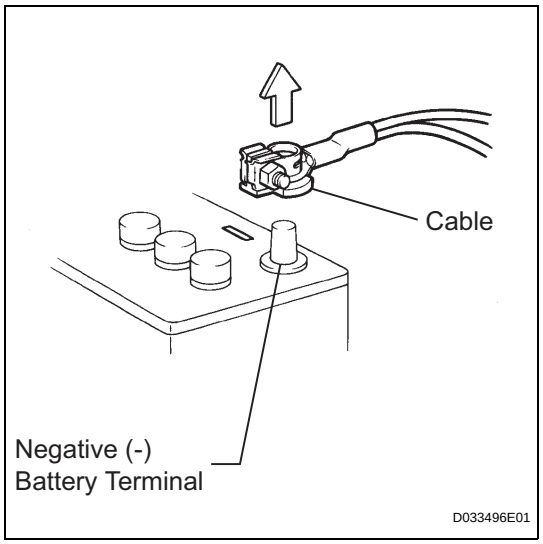

2. DISCONNECT AND RECONNECT CABLE OF NEGATIVE BATTERY TERMINAL

(a) Before performing electronic work, disconnect the cable from the negative (-) battery terminal in order to prevent it from shorting and burning out.

(b) Before disconnecting and reconnecting the battery cable, turn the ignition switch OFF and the headlight dimmer switch OFF. Then loosen the terminal nut completely. Do not damage the cable or terminal.

(c) When the battery cable is disconnected, the clock and radio settings and stored DTCs are erased. Therefore, before disconnecting the battery cable, make a notes of them.

NOTICE:

When the cable is disconnected from the negative (-) battery terminal, initialize the following system(s) after the cable is reconnected.

System Name	See Procedure
Meter / Gauge system	ME-10

3. CONNECT BATTERY NEGATIVE TERMINAL

(a) Connect the battery negative terminal to the cable and run the engine at no less than 2,000 rpm for 2 minute.

NOTICE:

If the engine exceeds 2,000 rpm, the A/C magnet clutch is automatically disengaged by the compressor protection control system.

AT

4. PRECAUTION FOR DISASSEMBLY AND REASSEMBLY

CAUTION:

When using compressed air, always aim away from yourself to prevent Automatic Transmission Fluid (ATF) or kerosene from spraying on your face.

NOTICE:

- **The automatic transmission is composed of precision-made parts, necessitating careful inspection before reassembly because even a small nick could cause fluid leakage or affect performance.**
- **The procedures are organized so that you work on only one component group at a time. This will help avoid confusion with similar-looking parts of different sub-assemblies being on your workbench at the same time.**
- **The component groups are inspected and repaired from the converter housing side.**
- **Whenever possible, complete the inspection, repair and reassembly before proceeding to the next component group. If a defect is found in a certain component group during reassembly, inspect and repair this group immediately. If a component group cannot be assembled because parts are being ordered, be sure to keep all parts of the group in a separate container while proceeding with disassembly, inspection, repair and reassembly of other component groups.**
- **When changing the automatic transmission fluid, use only "Toyota Genuine ATF WS" (ATF JWS3324 or NWS9638).**
- **All disassembled parts should be washed clean, and compressed air should be blown through any fluid passages and holes.**
- **Dry all parts with compressed air. Never use cloth.**
- **The recommended ATF or kerosene should be used for cleaning.**
- **After cleaning, the parts should be arranged in the order they were removed for efficient inspection, repairs, and reassembly.**
- **When disassembling a valve body, be sure to match each valve with its corresponding spring.**
- **New discs for the brakes and clutches that will be used for replacement must be soaked in ATF for at least 15 minutes before reassembly.**
- **All oil seal rings, clutch discs, clutch plates, rotating parts, and sliding surfaces should be coated with ATF prior to reassembly.**
- **All old gaskets and rubber O-rings must be replaced.**
- **Do not apply adhesive cement to gaskets and similar parts.**

- **Make sure that the ends of the snap rings are not aligned with any cutouts. Also make sure that snap rings are correctly installed into the grooves.**
- **If a worn bushing is to be replaced, the sub-assembly containing the bushing must also be replaced.**
- **Check the thrust bearings and races for wear or damage. Replace if necessary.**
- **Use petroleum jelly to keep parts in place.**
- **When working with FIPG material, perform the following:**
  Using a razor blade and gasket scraper, remove all old FIPG material from the gasket surface.
  Clean all components thoroughly to remove all foreign matter.
  Clean both sealing surfaces with a non-residue solvent.
  Apply FIPG material in a continuous line approximately 1 mm (0.04 in.) in diameter on the sealing surface.
  Reassemble parts within 10 minutes of applying FIPG material. Failing to do so will require the FIPG material to be removed and reapplied.

DEFINITION OF TERMS

Term	Definition
Monitor description	Description of what the ECM monitors and how it detects malfunctions (monitoring purpose and its details).
Related DTCs	A group of diagnostic trouble codes that are output by the ECM based on the same malfunction detection logic.
Typical enabling conditions	Preconditions that allow the ECM to detect malfunctions. With all preconditions satisfied, the ECM sets the DTC when the monitored value(s) exceeds the malfunction threshold(s).
Sequence of operation	The priority order that is applied to monitoring, if multiple sensors and components are used to detect the malfunction. While one sensor is being monitored, the next sensor or component will not be monitored until the previous monitoring has been completed.
Required sensor/components	The sensors and components that are used by the ECM to detect malfunctions.
Frequency of operation	The number of times that the ECM checks for malfunctions per driving cycle. "Once per driving cycle" means that the ECM detects the malfunction only one time during a single driving cycle. "Continuous" means that the ECM detects the malfunction every time the enabling conditions are met.
Duration	The minimum time that the ECM must detect a continuous deviation in the monitored value(s) before setting a DTC. This timing begins after the "typical enabling conditions" are met.
Malfunction thresholds	Beyond this value, the ECM determines that there is a malfunction and sets a DTC.
MIL operation	MIL illumination timing after a defect is detected. "Immediate" means that the ECM illuminates the MIL the instant the ECM determines that there is a malfunction. "2 driving cycles" means that the ECM illuminates the MIL if the same malfunction is detected again in a 2nd driving cycle.
Component operating range	Normal operation range of sensors and solenoids under normal driving conditions. These ranges are for a reference. They cannot be used to determine whether a sensor or solenoid is defective or not.

PARTS LOCATION

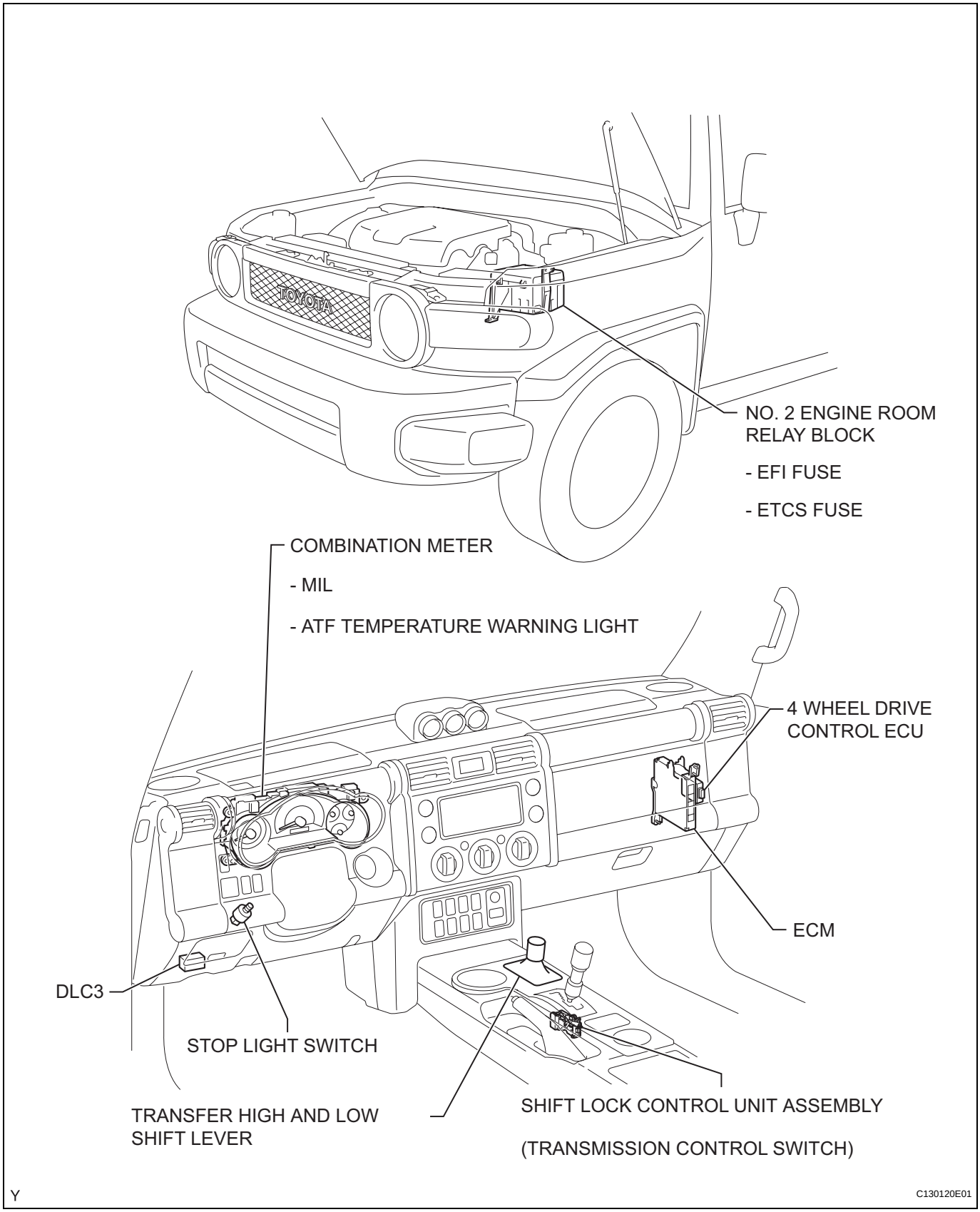

AT

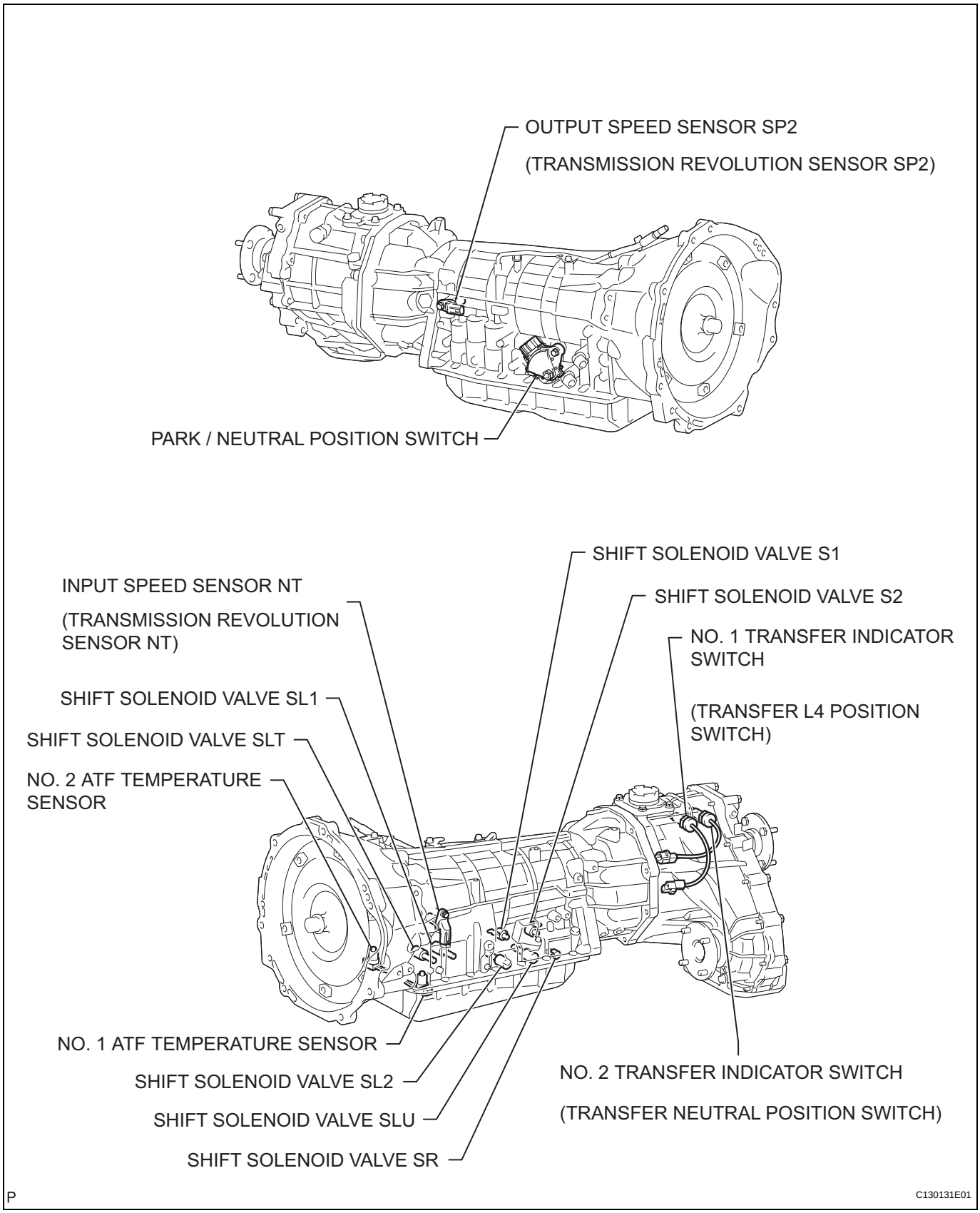
OUTPUT SPEED SENSOR SP2
(TRANSMISSION REVOLUTION SENSOR SP2)
PARK / NEUTRAL POSITION SWITCH
SHIFT SOLENOID VALVE S1
SHIFT SOLENOID VALVE S2
INPUT SPEED SENSOR NT
(TRANSMISSION REVOLUTION SENSOR NT)
NO. 1 TRANSFER INDICATOR SWITCH
(TRANSFER L4 POSITION SWITCH)
SHIFT SOLENOID VALVE SL1
SHIFT SOLENOID VALVE SLT
NO. 2 ATF TEMPERATURE SENSOR
NO. 1 ATF TEMPERATURE SENSOR
SHIFT SOLENOID VALVE SL2
SHIFT SOLENOID VALVE SLU
SHIFT SOLENOID VALVE SR
NO. 2 TRANSFER INDICATOR SWITCH
(TRANSFER NEUTRAL POSITION SWITCH)
P
C130131E01

AT

SYSTEM DIAGRAM

The configuration of the electronic control system in the A750F automatic transmission is as shown in the following chart.

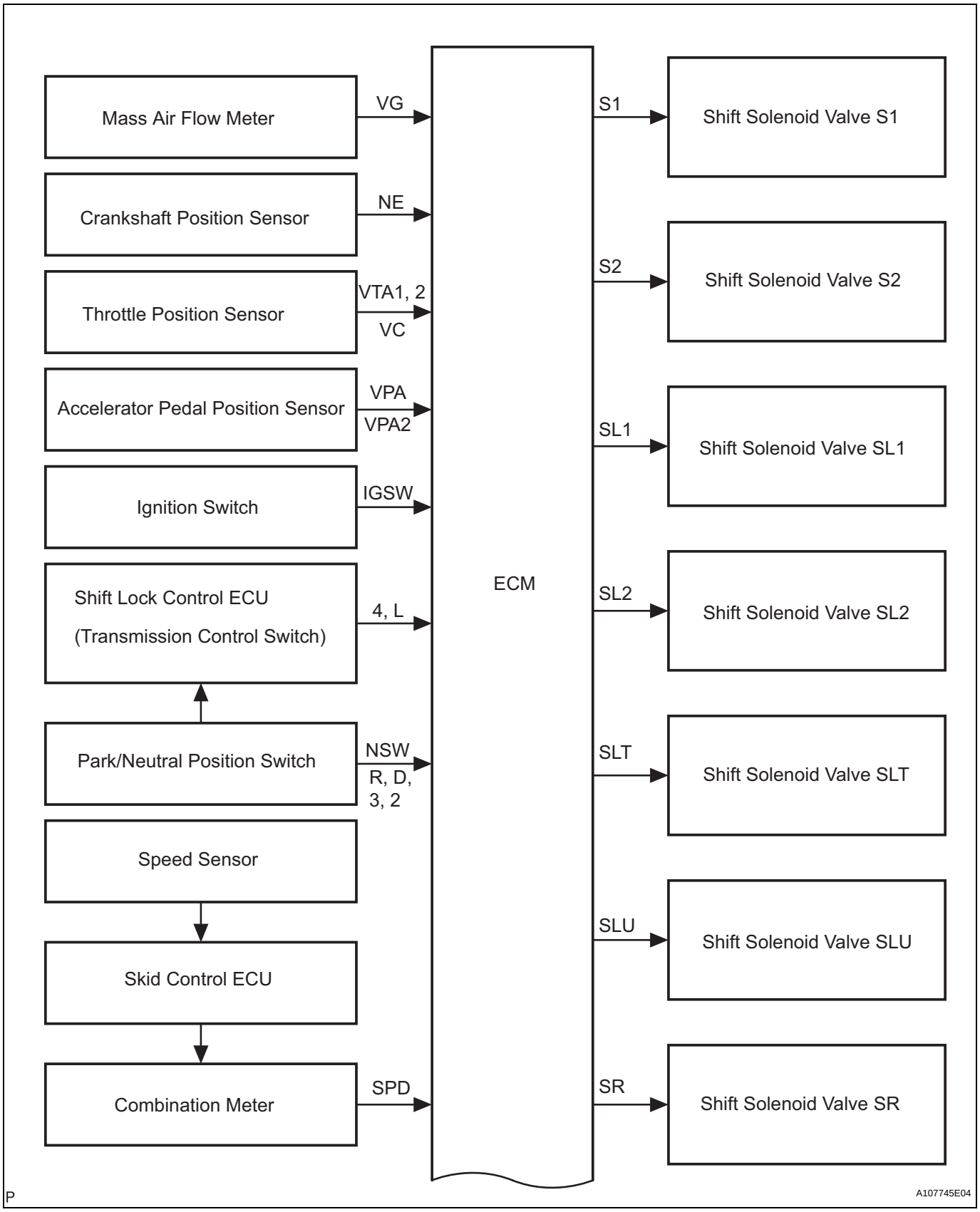

AT

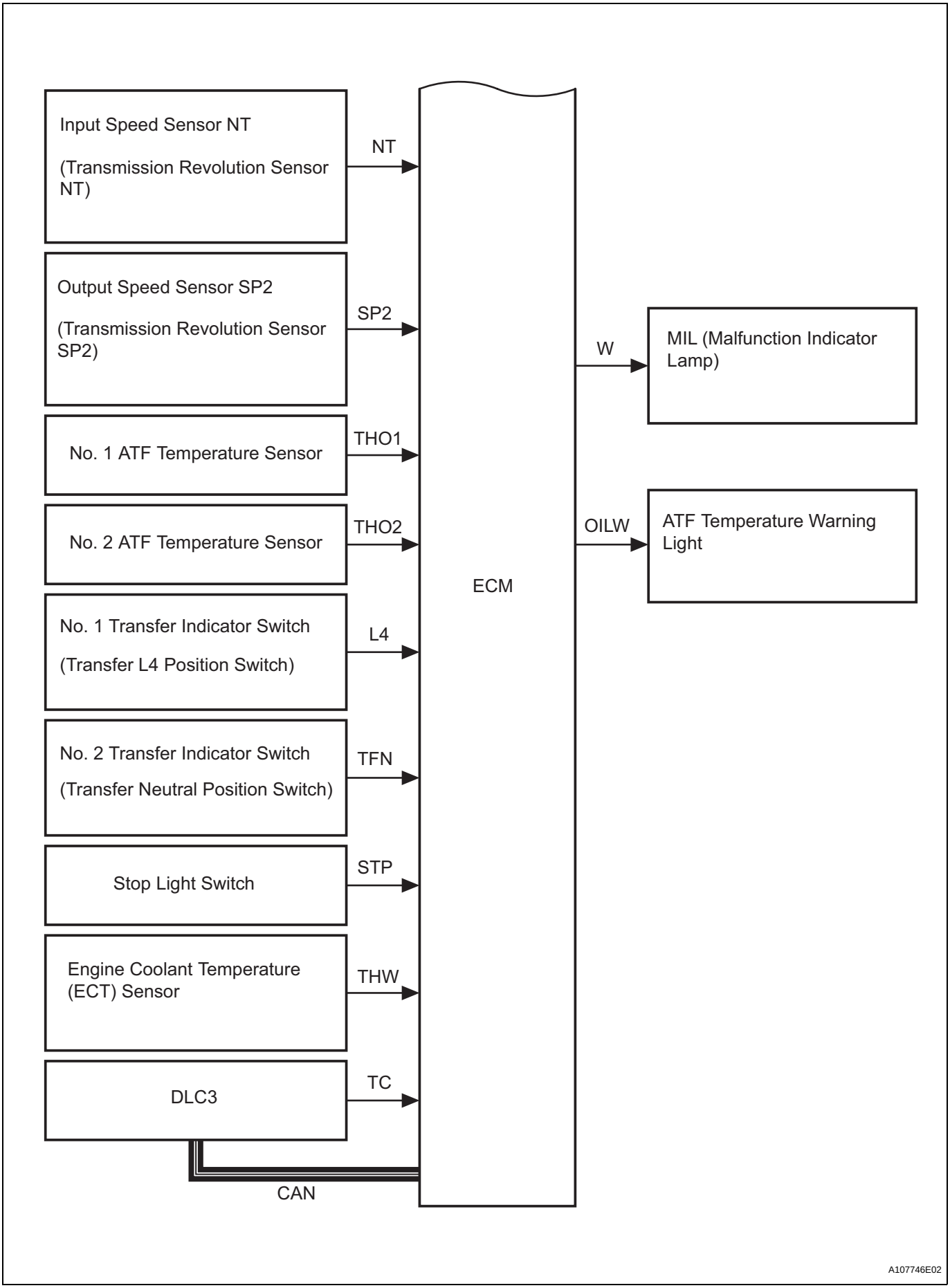
Input Speed Sensor NT
(Transmission Revolution Sensor NT)
NT
Output Speed Sensor SP2
(Transmission Revolution Sensor SP2)
SP2
No. 1 ATF Temperature Sensor
THO1
No. 2 ATF Temperature Sensor
THO2
No. 1 Transfer Indicator Switch
(Transfer L4 Position Switch)
L4
No. 2 Transfer Indicator Switch
(Transfer Neutral Position Switch)
TFN
Stop Light Switch
STP
Engine Coolant Temperature (ECT) Sensor
THW
DLC3
TC
CAN
ECM
W
MIL (Malfunction Indicator Lamp)
OILW
ATF Temperature Warning Light
A107746E02

AT

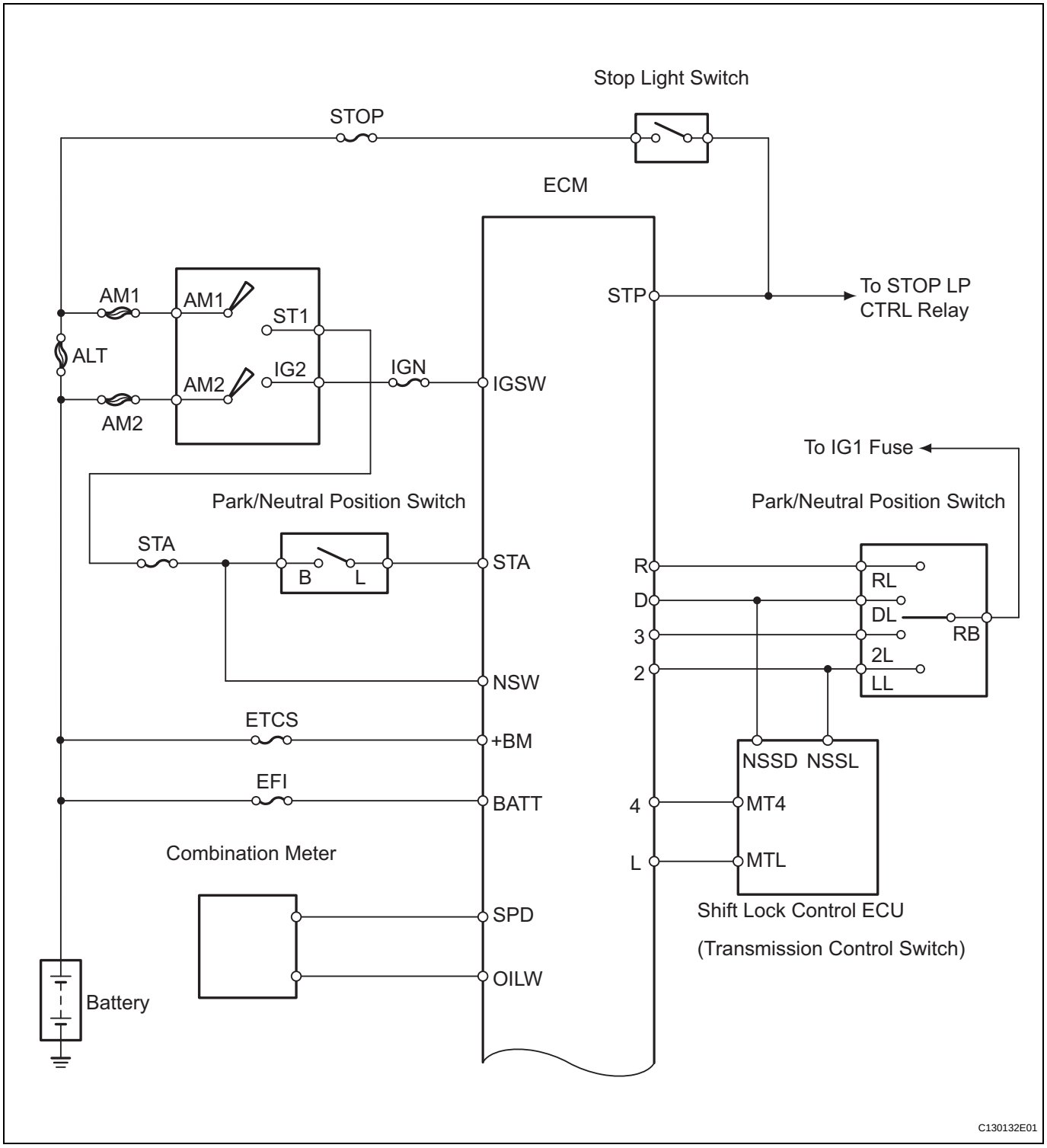
Stop Light Switch
STOP
ECM
AM1
AM1
ST1
ALT
AM2
IG2
IGN
IGSW
AM2
STP
To STOP LP
CTRL Relay
To IG1 Fuse
Park/Neutral Position Switch
Park/Neutral Position Switch
STA
B
L
STA
R
D
3
2
RL
DL
RB
2L
LL
NSW
ETCS
+BM
NSSD NSSL
EFI
BATT
4
MT4
L
MTL
Combination Meter
SPD
Shift Lock Control ECU
(Transmission Control Switch)
OILW
Battery
C130132E01

AT

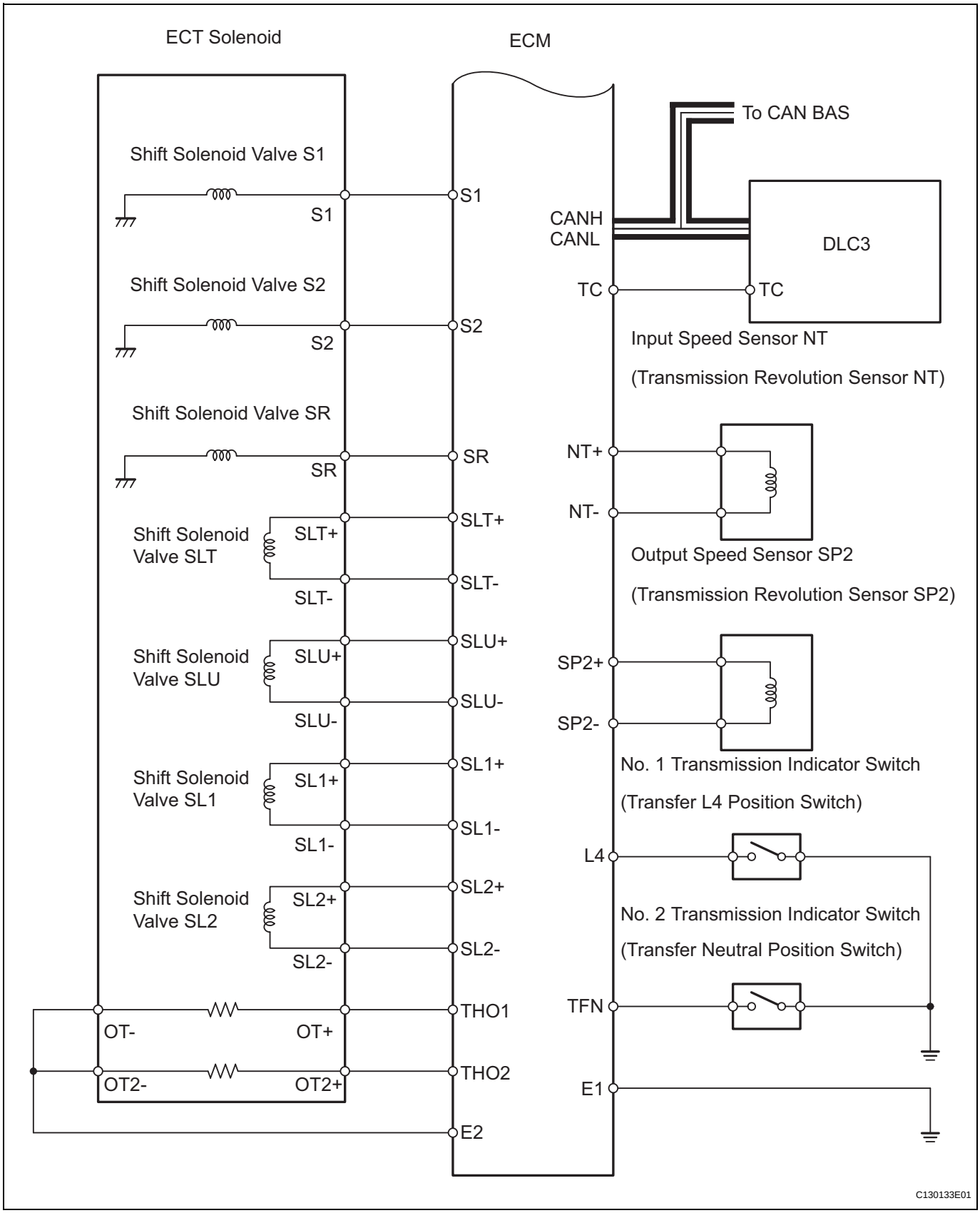
ECT Solenoid
ECM
Shift Solenoid Valve S1
S1
S1
Shift Solenoid Valve S2
S2
S2
Shift Solenoid Valve SR
SR
SR
Shift Solenoid Valve SLT
SLT+
SLT-
SLT+
SLT-
Shift Solenoid Valve SLU
SLU+
SLU-
SLU+
SLU-
Shift Solenoid Valve SL1
SL1+
SL1-
SL1+
SL1-
Shift Solenoid Valve SL2
SL2+
SL2-
SL2+
SL2-
OT-
OT+
OT2-
OT2+
THO1
THO2
E2
To CAN BAS
CANH
CANL
DLC3
TC
TC
Input Speed Sensor NT
(Transmission Revolution Sensor NT)
NT+
NT-
Output Speed Sensor SP2
(Transmission Revolution Sensor SP2)
SP2+
SP2-
No. 1 Transmission Indicator Switch
(Transfer L4 Position Switch)
L4
No. 2 Transmission Indicator Switch
(Transfer Neutral Position Switch)
TFN
E1
C130133E01

AT

SYSTEM DESCRIPTION

1. SYSTEM DESCRIPTION

(a) The ECT (Electronic controlled automatic transmission) is an automatic transmission that electronically controls shift timing using the ECM. The ECM detects electrical signals that indicate engine and driving conditions, and controls the shift point, based on driver habits and road conditions. As a result, fuel efficiency and power transmission performance are improved.
Shift shock has been reduced by controlling the engine and transmission simultaneously.
In addition, the ECT has features such as follows:
- Diagnostic function.
- Fail-safe function when a malfunction occurs.

HOW TO PROCEED WITH TROUBLESHOOTING

HINT:

- The ECM of this system is connected to the CAN communication system. Therefore, before starting troubleshooting, make sure that there is no trouble in the CAN communication system.
- *: Use the intelligent tester.

1	VEHICLE BROUGHT TO WORKSHOP

NEXT

2	CUSTOMER PROBLEM ANALYSIS

NEXT

3	CONNECT INTELLIGENT TESTER TO DLC3 *

NEXT

4	CHECK AND CLEAR DTCS AND FREEZE FRAME DATA *

Refer to the DTC CHECK / CLEAR (See page AT-33).

NEXT

AT

5	VISUAL INSPECTION

NEXT

6	SETTING CHECK MODE DIAGNOSIS *

Refer to the CHECK MODE PROCEDURE (See page AT-34).

NEXT

7	PROBLEM SYMPTOM CONFIRMATION

Refer to the ROAD TEST (See page AT-13).

Result

Result	Proceed to
Symptom does not occur	A
Symptom occurs	B

B → GO TO STEP 9

A

8	SYMPTOM SIMULATION

Refer to the ELECTRONIC CIRCUIT INSPECTION PROCEDURE (See page IN-44).

NEXT

9	DTC CHECK *

Refer to the DTC CHECK / CLEAR (See page AT-33).

Result

Result	Proceed to
DTC is not output	A
DTC is output	B

B → GO TO STEP 17

A

10	BASIC INSPECTION

Refer to the AUTOMATIC TRANSMISSION FLUID (See page AT-147).
Refer to the PARK/NEUTRAL POSITION SWITCH (See page AT-159).
Refer to the FLOOR SHIFT ASSEMBLY (See page AT-171).

NG → GO TO STEP 19

OK

11	MECHANICAL SYSTEM TEST

Refer to the MECHANICAL SYSTEM TEST (See page AT-16).

NG → GO TO STEP 16

OK

12	HYDRAULIC TEST

Refer to the HYDRAULIC TEST (See page AT-18).

NG → GO TO STEP 16

OK

13	MANUAL SHIFTING TEST

Refer to the MANUAL SHIFTING TEST (See page AT-19).

NG → GO TO STEP 15

OK

14	PROBLEM SYMPTOMS TABLE CHAPTER 1

Refer to the PROBLEM SYMPTOMS TABLE (See page AT-23).

NG → GO TO STEP 18

OK

15	PROBLEM SYMPTOMS TABLE CHAPTER 2

Refer to the PROBLEM SYMPTOMS TABLE (See page AT-23).

NEXT

16	PART INSPECTION

NEXT → GO TO STEP 19

17	DTC CHART

AT

Refer to the DIAGNOSTIC TROUBLE CODE CHART (See page AT-41).

NEXT

18	CIRCUIT INSPECTION

NEXT

19	REPAIR OR REPLACE

NEXT

20	**CONFIRMATION TEST**

NEXT

END

ROAD TEST

1. PROBLEM SYMPTOM CONFIRMATION

(a) Based on the result of the customer problem analysis, try to reproduce the symptoms. If the problem is that the transmission does not shift up, shift down, or the shift point is too high or too low, conduct the following road test while referring to the automatic shift schedule and simulate the problem symptoms.

2. ROAD TEST

NOTICE:

Perform the test at the normal operating ATF (Automatic Transmission Fluid) temperature: 50° to 80°C (122° to 176°F).

(a) D position test:

Shift into the D position, fully depress the accelerator pedal and check the following points.

(1) Check up-shift operation.

Check that 1 → 2, 2 → 3, 3 → 4 and 4 → 5th up-shifts take place, and that the shift points conform to the automatic shift schedule (See page SS-26).

HINT:

5th Gear Up-shift Prohibition Control

- Engine coolant temperature is 55°C (131°F) or less and vehicle speed is 32 mph (51 km/h) or less.

4th Gear Up-shift Prohibition Control

- Engine coolant temperature is 47°C (116.6°F) or less and vehicle speed is 30.4 mph (49 km/h) or less.

5th Gear Lock-up Prohibition Control

- Brake pedal is depressed.
- Accelerator pedal is released.
- Engine coolant temperature is 60°C (140°F) or less.

(2) Check for shift shock and slippage

Check for shock and slippage at the 1 → 2, 2 → 3, 3 → 4 and 4 → 5th up-shifts.

(3) Check for abnormal noise and vibration.

Check for abnormal noise and vibration when up-shifting from 1 → 2, 2 → 3, 3 → 4 and 4 → 5 while driving with the shift lever in the D position, and check while driving in the lock-up condition.

HINT:

The check for the cause of abnormal noise and vibration must be done thoroughly as it could also be due to loss of balance in the differential, torque converter clutch, etc.

AT

(4) Check kick-down operation.
Check vehicle speeds when the 2 → 1, 3 → 2, 4 → 3, and 5 → 4 kick-downs take place while driving with the shift lever in the D position. Confirm that each speed is within the applicable vehicle speed range indicated in the automatic shift schedule (See page SS-26).

(5) Check for abnormal shock and slippage at kick-down.

(6) Check the lock-up mechanism.
- Drive in the D position (5th gear), at a steady speed (lock-up ON).
- Lightly depress the accelerator pedal and check that the engine speed does not change abruptly.

HINT:
If there is a sudden increase in engine speed, there is no lock-up.

(b) 4 position test:
Shift into the 4 position, fully depress the accelerator pedal and check the following points.

(1) Check up-shift operation.
Check that the 1 → 2, 2 → 3 and 3 → 4 up-shifts take place and that the shift points conform to the automatic shift schedule (See page SS-26).
HINT:
- There is no 5th up-shift in the 4 position.
- 4th Gear Lock-up Prohibition Control
- Brake pedal is depressed.
- Accelerator pedal is released.
- Engine coolant temperature is 60°C (140°F) or less.

(2) Check engine braking.
While driving in the 4 position and 4th gear, release the accelerator pedal and check the engine braking effect.

(3) Check for abnormal noises during acceleration and deceleration, and for shock at up-shift and down-shift.

(4) Check the lock-up mechanism.
- Drive in the 4 position and 4th gear, at a steady speed (lock-up ON).
- Lightly depress the accelerator pedal and check that the engine speed does not change abruptly.

HINT:
If there is a sudden increase in engine speed, there is no lock-up.

(c) 3 position test:
Shift into the 3 position, fully depress the accelerator pedal and check the following points.
(1) Check up-shift operation.
Check that the 1 → 2 and 2 → 3 up-shifts take place and that the shift points conform to the automatic shift schedule (See page SS-26).
HINT:
There is no 4th up-shift and lock-up in the 3 position.
(2) Check engine braking.
While running in the 3 position and 3rd gear, release the accelerator pedal and check the engine braking effect.
(3) Check for abnormal noises during acceleration and deceleration, and for shock at up-shift and down-shift.

(d) 2 position test:
Shift into the 2 position, fully depress the accelerator pedal and check the following points.
(1) Check up-shift operation.
Check that the 1 → 2 up-shift takes place and that the shift point conforms to the automatic shift schedule (See page SS-26).
HINT:
There is no 3rd up-shift and lock-up in the 2 position.
(2) Check engine braking.
While running in the 2 position and 2nd gear, release the accelerator pedal and check the engine braking effect.
(3) Check for abnormal noises during acceleration and deceleration, and for shock at up-shift and down-shift.

AT

(e) L position test:
Shift into the L position and fully depress the accelerator pedal and check the following points.
(1) Check no up-shift.
While running in the L position, check that there is no up-shift to 2nd gear.
(2) Check engine braking.
While running in the L position, release the accelerator pedal and check the engine braking effect.
(3) Check for abnormal noises during acceleration and deceleration.

(f) R position test:
Shift into the R position, lightly depress the accelerator pedal, and check that the vehicle moves backward without any abnormal noise or vibration.
CAUTION:
Before conducting this test, ensure that the test area is free from people and obstructions.

(g) P position test:
Stop the vehicle on a grade (more than 5°) and after shifting into the P position, release the parking brake. Then, check that the parking lock pawl holds the vehicle in place.

MECHANICAL SYSTEM TESTS

1. STALL SPEED TEST

HINT:

This test is to check the overall performance of the engine and transmission.

NOTICE:

- **Do not perform the stall speed test for longer than 5 seconds.**
- **To ensure safety, perform this test in an open and level area that provides good traction.**
- **The stall speed test should always be performed by at least 2 people. One person should observe the condition of the wheels and wheel chocks while the other is performing the test.**

(a) Connect the intelligent tester to the CAN VIM. Then connect the CAN VIM to the DLC3.

(b) Run the vehicle until the transmission fluid temperature has reached 50 to 80°C (122 to 176°F).

(c) Allow the engine to idle with the air conditioning OFF.

(d) Chock all 4 wheels.

(e) Set the parking brake and keep the brake pedal depressed firmly with your left foot.

(f) Shift the shift lever into the drive position.

(g) Depress the accelerator pedal as much as possible with your right foot.

(h) Read the engine rpm (stall speed) and release the accelerator pedal immediately.

Standard value:

2,250 to 2,550 rpm

Evaluation:

Test Result	Possible Cause
Stall speed is lower than standard value	• Stator one-way clutch is not operating properly • Torque converter is faulty (stall speed is less than standard value by 600 rpm or more) • Engine power may be insufficient
Stall speed is higher than standard value	• Line pressure is low • No. 1 clutch (C1) slipping • No. 3 one-way clutch (F3) is not operating properly • Improper fluid level

AT

2. SHIFT TIME LAG TEST

HINT:

This test is to check the condition of the direct clutch, forward clutch, 1st brake and reverse brake.

(a) Connect the intelligent tester to the CAN VIM. Then connect the CAN VIM to the DLC3.

(b) Run the vehicle until the transmission fluid temperature has reached 50 to 80°C (122 to 176°F).

(c) Allow the engine to idle with the air conditioning OFF.

(d) Set the parking brake and keep the brake pedal depressed firmly.

(e) Check the D range time lag.
(1) Shift the shift lever into the N position and wait for 1 minute.
(2) Shift the shift lever into the D position and measure the time until the shock is felt.
(3) Repeat the 2 procedures above 3 times, and calculate the average time of the 3 tests.

(f) Check the R range time lag.
(1) Shift the shift lever into the N position and wait for 1 minute.
(2) Shift the shift lever into the R position and measure the time until the shock is felt.
(3) Repeat the 2 procedures above 3 times, and calculate the average time of the 3 tests.
Standard value:
D range time lag is less than 1.2 seconds
R range time lag is less than 1.5 seconds

Evaluation:

Test Result	Possible Cause
D range time lag exceeds standard value	• Line pressure is low • No. 1 clutch (C1) is worn • No. 3 one-way clutch (F3) is not operating properly
R range time lag exceeds standard value	• Line pressure is low • No. 3 clutch (C3) is worn • No. 4 brake (B4) is worn • No. 1 one-way clutch (F1) is not operating properly

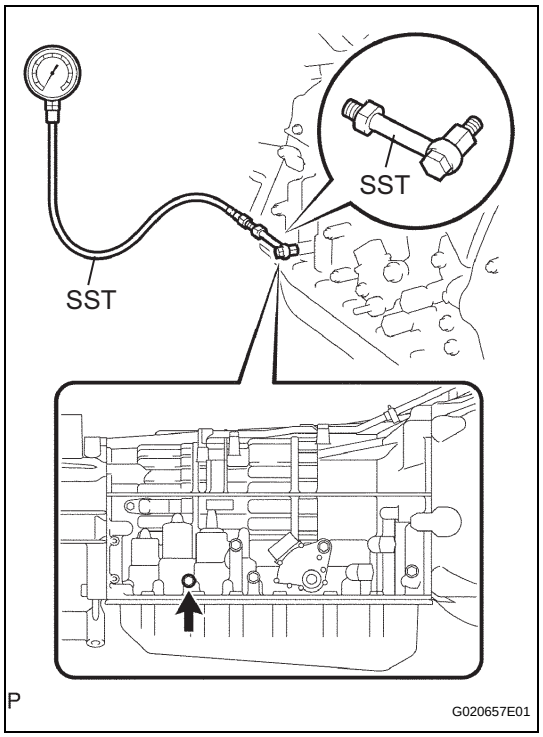

HYDRAULIC TEST

1. PERFORM HYDRAULIC TEST

(a) Measure the line pressure.
NOTICE:
- **Perform the test at the normal operating ATF (Automatic Transmission Fluid) temperature of 50° to 80°C (122° to 176°F).**
- **The line pressure test should always be carried out in pairs. One technician should observe the condition of the wheels or wheel stoppers outside the vehicle while the other is doing the test.**
- **Be careful to prevent the SST hose from interfering with the exhaust pipe.**
- **This check must be conducted after checking and adjusting the engine.**
- **Perform with the A/C OFF.**
- **Do not conduct stall tests for longer than 5 seconds continuously.**

(1) Warm up the ATF.
(2) Lift the vehicle up.
(3) Remove the test plug on the transmission case center right side and connect SST.
SST 09992-00095 (09992-00151, 09992-00271)
(4) Fully apply the parking brake and chock the 4 wheels.
(5) Start the engine and check the idling speed.

AT

(6) Keep your left foot pressing firmly on the brake pedal and shift into the D position.
(7) Measure the line pressure while the engine is idling.
(8) Depress the accelerator pedal all the way down. Quickly read the highest line pressure when the engine speed reaches the stall speed.
(9) In the same manner, do the test in the R position.

Specified line pressure

Condition	D position	R position
Idling	**356 to 426 kPa (3.6 to 4.3 kgf/cm^2 , 52 to 62 psi)**	**500 to 600 kPa (5.1 to 6.1 kgf/cm^2, 73 to 87 psi)**
Stall test	**1,367 to 1,477 kPa (14.0 to 15.1 kgf/cm^2, 198 to 214 psi)**	**1,278 to 1,506 kPa (13.0 to 15.4 kgf/cm^2, 185 to 218 psi)**

Evaluation:

Problem	Possible cause
Measured values are higher than specified in all positions	• Shift solenoid valve SLT defective • Regulator valve defective
Measured values are lower than specified in all positions	• Shift solenoid valve SLT defective • Regulator valve defective • Oil pump defective
Pressure is low in D position only	• D position circuit fluid leakage • No. 1 clutch (C_1) defective
Pressure is low in R position only	• R position circuit fluid leakage • No. 3 clutch (C_3) defective • No. 4 brake (B_4) defective

MANUAL SHIFTING TEST

1. MANUAL SHIFTING TEST

HINT:

- Through this test, it can be determined whether the trouble occurs in the electrical circuit or if it is a mechanical problem in the transmission.
- If any abnormalities are found in the following test, the problem is in the transmission itself.

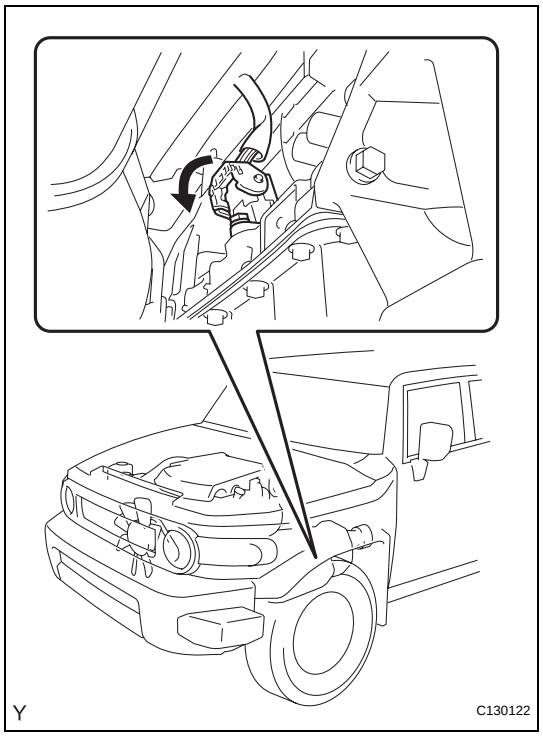

(a) Disconnect the connector of the transmission wire.
HINT:
It is possible to deactivate the electrical shift control by disconnecting the transmission wire. The gear positions can then be changed mechanically with the shift lever.

(b) Drive with the transmission wire disconnected. Shift the shift lever to each position to check whether the gear position changes as shown in the table below.

Shift Lever Position	Gear Position
D	4th
4	4th
3	3rd
2	1st
L	1st
R	R
P	P

(c) Connect the connector of the transmission wire.

(d) Clear the DTC (See page AT-33).

AT

INITIALIZATION

1. RESET MEMORY

CAUTION:

Perform the RESET MEMORY (AT initialization) when replacing the automatic transmission assembly, engine assembly or ECM.

NOTICE:

Intelligent tester only

HINT:

The ECM stores the conditions under which the ECT (Electronic Controlled Automatic Transmission) controls the automatic transmission and engine assemblies according to their characteristics. Therefore, when the automatic transmission assembly, engine assembly, or ECM has been replaced, it is necessary to reset the memory so that the ECM can store the new information. Reset procedure is as follows.

(a) Turn the ignition switch off.

(b) Connect the intelligent tester together with the CAN VIN (controller area network vehicle interface module) to the DLC3.

(c) Turn the ignition switch to the ON position and push the intelligent tester main switch on.

(d) Select the items "DIAGNOSIS / ENHANCED OBD II".

(e) Perform the reset memory procedure from the ENGINE menu.

CAUTION:

After performing the RESET MEMORY, be sure to perform the ROAD TEST (See page AT-13) described earlier.

HINT:

The ECM stores the new information during the ROAD TEST.

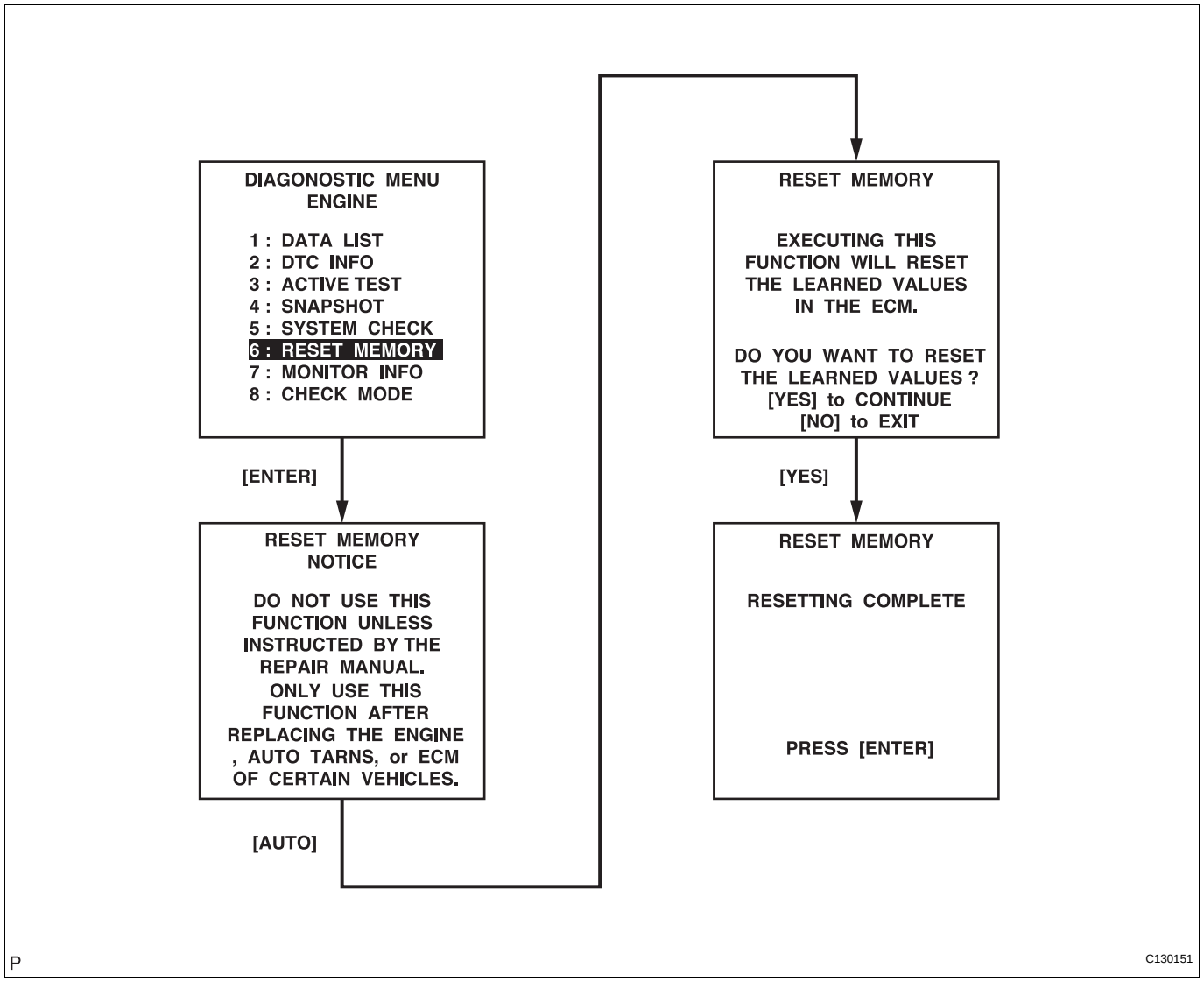

2. SET UP FUNCTION OF ATF TEMPERATURE WARNING LIGHT (ONLY 4WD VEHICLE)

CAUTION:

Re-set the function of the ATF (Automatic Transmission Fluid) temperature warning light, if the ECM has been replaced or RESET MEMORY (AT initialization) has been performed.

HINT:

- The ATF temperature warning light is built into the 4WD vehicles. When the ATF temperature is too high, the ATF temperature warning light illuminates to warn the driver. If the ECM has been replaced or RESET MEMORY has been performed, this function does not work unless the following procedure is performed.
- Once the ECM is set up, its memory will not be cleared by only disconnecting the negative cable from the battery.

(a) Start the engine.

(b) Shift the transfer high and low shift lever to the 4WD position. Check that the 4WD indicator illuminates.

AT

(c) Shift the transfer high and low shift lever to the 2WD position.
(d) Drive the vehicle at a vehicle speed of 25 mph (40 km/h) or more.

NOTICE:
If the battery is disconnected before driving the vehicle at a vehicle speed of 25 mph (40 km/h) or more, the memory will be cleared. If the battery has been disconnected, perform steps (a) to (d) again.

MONITOR DRIVE PATTERN

1. MONITOR DRIVE PATTERN FOR ECT TEST

(a) Perform this drive pattern as one method to simulate the detection conditions of the ECT (Electronic Controlled Automatic Transmission) malfunctions.
(The DTCs may not be detected due to the actual driving conditions. And some DTCs may not be detected through this drive pattern.)
HINT:
Preparation for driving

- Warm up the engine sufficiently. (Engine coolant temperature should be 60°C (140°F) or higher)
- Drive the vehicle when the atmospheric temperature is -10°C (14°F) or higher. (Malfunction is not detected when the atmospheric temperature is less than -10°C (14°F))

Notice in driving

- Drive the vehicle through all gears. Stop → 1st → 2nd → 3rd → 4th → 5th → 5th (lock-up ON).
- Repeat the above driving pattern three times or more.

NOTICE:

- **The monitor status can be checked using the intelligent tester. When using the intelligent tester, monitor status can be found in the "ENHANCED OBD II / DATA LIST" or under "CARB OBD II".**
- **In the event that the drive pattern must be interrupted (possibly due to traffic conditions or other factors), the drive pattern can be resumed and, in most cases, the monitor can be completed.**

CAUTION:

Perform this drive pattern on as level a road as possible and strictly observe the posted speed limits and traffic laws while driving.

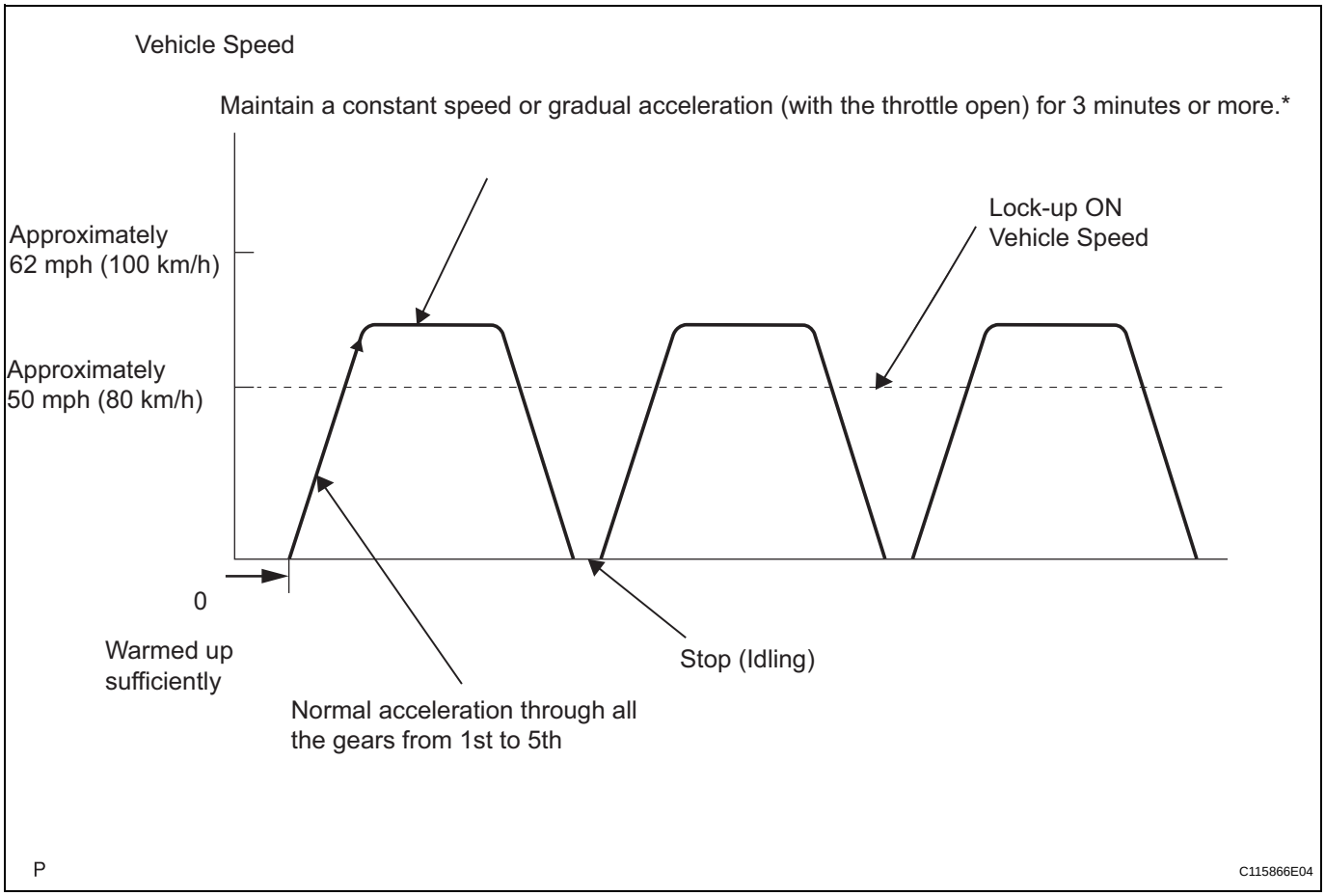

HINT:

*: Drive at such a speed in the uppermost gear, as to engage lock-up. The vehicle can be driven at a speed lower than that in the above diagram under the lock-up condition.

NOTICE:

It is necessary to drive the vehicle for approximately 30 minutes to detect DTC P0711 (ATF temperature sensor malfunction).

AT

PROBLEM SYMPTOMS TABLE

HINT:

- If no DTCs are displayed during the diagnostic trouble code check although the trouble still occurs, check the electrical circuits for each symptom in the order given in the charts on the following pages and proceed to the page given for troubleshooting.
- The Matrix Chart is divided into 2 chapters.
- *1: Denotes that when there are malfunctions in the circuit, DTCs may be set.

Chapter 1: Electronic Circuit Matrix Chart

Refer to the table below when the cause of the trouble is considered to be electrical.
If the trouble still occurs even though there are no abnormalities in any of the other circuits, check and replace the ECM.

Symptom	Suspected area	See page
No up-shift (A particular gear, from 1st to 4th gear, is not up-shifted)	1. Shift solenoid valve (S1) circuit *1	AT-107
	2. Shift solenoid valve (S2) circuit *1	AT-111
	3. ECM	IN-44
No up-shift (4th to 5th)	1. Transmission control switch circuit (D - 4) *1	AT-45
	2. Engine coolant temperature sensor circuit *1	ES-57
	3. Speed sensor NT circuit *1	AT-59
	4. Shift solenoid valve (SL1) circuit *1	AT-69
	5. Shift solenoid valve (SL2) circuit *1	AT-94
	6. Shift solenoid valve (SR) circuit *1	AT-115
	7. ECM	IN-44
No up-shift (3rd to 4th)	1. Engine coolant temperature sensor circuit *1	ES-57
	2. Shift solenoid valve (S2) circuit *1	AT-111
	3. ECM	IN-44
No up-shift (1st to 2nd)	1. Transmission control switch circuit (2 - L) *1	AT-45
	2. Shift solenoid valve (S2) circuit *1	AT-111
	3. ECM	IN-44
No down-shift (5th to 4th)	1. Transmission control switch circuit (D - 4) *1	AT-45
	2. Shift solenoid valve (SL1) circuit *1	AT-69
	3. Shift solenoid valve (SL2) circuit *1	AT-94
	4. Shift solenoid valve (SR) circuit *1	AT-115
	5. ECM	IN-44
No down-shift (2nd to 1st)	1. Transmission control switch circuit (2 - L) *1	AT-45
	2. Shift solenoid valve (S2) circuit *1	AT-111
	3. ECM	IN-44
No down-shift (A particular gear, from 1st to 4th gear, is not down-shifted)	1. Shift solenoid valve (S1) circuit *1	AT-107
	2. Shift solenoid valve (S2) circuit *1	AT-111
	3. ECM	IN-44
No lock-up	1. No. 1 ATF temperature sensor circuit *1	AT-51
	2. Transfer L4 position switch circuit *1	AT-144
	3. Stop light switch circuit *1	ES-57
	4. Speed sensor NT circuit *1	AT-59
	5. Shift solenoid valve (SLU) circuit *1	AT-140
	6. Engine coolant temperature sensor circuit *1	ES-57
	7. ECM	IN-44
No lock-up off	1. Shift solenoid valve (SLU) circuit *1	AT-140
	2. ECM	IN-44

Symptom	Suspected area	See page
Shift point too high or too low	1. Shift solenoid valve (SLT) circuit *1	AT-126
	2. Speed sensor NT circuit *1	AT-59
	3. Speed sensor SP2 circuit *1	AT-64
	4. Throttle position sensor circuit *1	ES-57
	5. No. 1 ATF temperature sensor circuit *1	AT-51
	6. Transfer L4 position switch circuit *1	AT-144
	7. ECM	IN-44
Up-shift from 4th to 5th while shift lever is in 4 position	1. Transmission control switch circuit (D - 4) *1	AT-45
	2. ECM	IN-44
Up-shift from 4th to 5th while engine is cold	1. Engine coolant temperature sensor circuit *1	ES-57
	2. ECM	IN-44
Up-shift from 3rd to 4th while shift lever is in 3 position	1. Park/neutral position switch circuit *1	AT-45
	2. ECM	IN-44
Up-shift from 2nd to 3rd while shift lever is in 2 position	1. Park/neutral position switch circuit *1	AT-45
	2. ECM	IN-44
Up-shift from 1st to 2nd while shift lever is in L position	1. Transmission control switch circuit (2 - L) *1	AT-45
	2. ECM	IN-44
Harsh engagement (N to D)	1. Speed sensor NT circuit *1	AT-59
	2. Shift solenoid valve (SL1) circuit *1	AT-69
	3. Shift solenoid valve (SLT) circuit *1	AT-126
	4. ECM	IN-44
Harsh engagement (Lock-up)	1. Speed sensor NT circuit *1	AT-59
	2. Speed sensor SP2 circuit *1	AT-64
	3. Shift solenoid valve (SLU) circuit *1	AT-140
	4. ECM	IN-44
Harsh engagement (Any driving position)	ECM	IN-44
Poor acceleration	1. No. 2 ATF temperature sensor circuit *1	AT-130
	2. Engine coolant temperature sensor circuit *1	ES-57
	3. Shift solenoid valve (SLT) circuit *1	AT-126
	4. ECM	IN-44
No engine braking	ECM	IN-44
No kick-down	ECM	IN-44
Engine stalls when starting off or stopping	1. Shift solenoid valve (SLU) circuit *1	AT-140
	2. ECM	IN-44
ATF temperature warning light remains on	1. No. 2 ATF temperature sensor circuit *1	AT-130
	2. Engine coolant temperature sensor circuit *1	ES-57
	3. ECM	IN-44
Lock-up at 3rd gear	1. No. 2 ATF temperature sensor circuit *1	AT-130
	2. Engine coolant temperature sensor circuit *1	ES-57
	3. ECM	IN-44
Shift point too high	1. No. 2 ATF temperature sensor circuit *1	AT-130
	2. Engine coolant temperature sensor circuit *1	ES-57
	3. ECM	IN-44

Chapter 2: On-Vehicle Repair and Off-Vehicle Repair

Symptom	Suspected area	See page
Vehicle does not move with shift lever in any forward position and reverse position	1. Transmission control cable	AT-188
	2. Manual valve	AT-193
	3. Parking lock pawl	AT-193
	4. Rear planetary gear unit	AT-193
	5. Torque converter clutch	AT-186
Vehicle does not move with shift lever in R position	1. Valve body assembly	AT-161
	2. No. 3 clutch (C3)	AT-193
	3. No. 4 brake (B4)	AT-193
	4. No. 1 one-way clutch (F1)	AT-193
No up-shift (1st to 2nd)	1. Valve body assembly	AT-161
	2. No. 3 brake (B3)	AT-193
	3. No. 1 one-way clutch (F1)	AT-193
	4. No. 2 one-way clutch (F2)	AT-193
No up-shift (2nd to 3rd)	1. Valve body assembly	AT-161
	2. No. 3 clutch (C3)	AT-193
No up-shift (3rd to 4th)	1. Valve body assembly	AT-161
	2. No. 2 clutch (C2)	AT-193
No up-shift (4th to 5th)	1. Valve body assembly	AT-161
	2. No. 1 brake (B1)	AT-193
	3. No. 1 clutch (C1)	AT-193
No down-shift (5th to 4th)	Valve body assembly	AT-161
No down-shift (4th to 3rd)	Valve body assembly	AT-161
No down-shift (3rd to 2nd)	Valve body assembly	AT-161
No down-shift (2nd to 1st)	Valve body assembly	AT-161
No lock-up or No lock-up off	1. Shift solenoid valve (SLU)	AT-135
	2. Valve body assembly	AT-161
	3. Torque converter clutch	AT-186
Harsh engagement (N to D)	1. Shift solenoid valve (SL1)	AT-84
	2. Valve body assembly	AT-161
	3. C1 accumulator	AT-193
	4. No. 1 clutch (C1)	AT-193
	5. No. 3 one-way clutch (F3)	AT-193
Harsh engagement (Lock-up)	1. Shift solenoid valve (SLU)	AT-135
	2. Valve body assembly	AT-161
	3. Torque converter clutch	AT-186
Harsh engagement (N to R)	1. Shift solenoid valve (SLT)	AT-119
	2. Shift solenoid valve (SLU)	AT-135
	3. Valve body assembly	AT-161
	4. C3 accumulator	AT-193
	5. No. 3 clutch (C3)	AT-193
	6. No. 4 brake (B4)	AT-193
	7. No. 1 one-way clutch (F1)	AT-193
Harsh engagement (1st to 2nd, 2nd to 3rd, 3rd to 4th and 4th to 5th)	1. Shift solenoid valve (SLT)	AT-119
	2. Shift solenoid valve (SL1)	AT-84
	3. Valve body assembly	AT-161

Symptom	Suspected area	See page
Harsh engagement (1st to 2nd)	1. Valve body assembly	AT-161
	2. B3 accumulator	AT-193
	3. No. 3 brake (B3)	AT-193
	4. No. 1 one-way clutch (F1)	AT-193
	5. No. 2 one-way clutch (F2)	AT-193
Harsh engagement (2nd to 3rd)	1. Valve body assembly	AT-161
	2. C3 accumulator	AT-193
	3. No. 3 clutch (C3)	AT-193
Harsh engagement (3rd to 4th)	1. Valve body assembly	AT-161
	2. C2 accumulator	AT-193
	3. No. 2 clutch (C2)	AT-193
Harsh engagement (4th to 5th)	1. Shift solenoid valve (SL1)	AT-84
	2. Shift solenoid valve (SL2)	AT-89
	3. Valve body assembly	AT-161
	4. No. 1 brake (B1)	AT-193
	5. No. 1 clutch (C1)	AT-193
Slippage or shuddering (Forward and reverse: After warm-up)	1. Valve body assembly	AT-161
	2. Oil strainer	AT-161
	3. No. 1 one-way clutch (F1)	AT-193
	4. No. 3 clutch (C3)	AT-193
	5. Torque converter clutch	AT-186
Slippage or shuddering (Particular position: Just after engine starts)	Torque converter clutch	AT-186
Slippage or shuddering (R position)	1. No. 4 brake (B4)	AT-193
	2. No. 1 one-way clutch (F1)	AT-193
	3. No. 3 clutch (C3)	AT-193
Slippage or shuddering (1st)	1. No. 1 clutch (C1)	AT-193
	2. No. 3 one-way clutch (F3)	AT-193
Slippage or shuddering (2nd)	1. No. 1 clutch (C1)	AT-193
	2. No. 3 brake (B3)	AT-193
	3. No. 1 one-way clutch (F1)	AT-193
	4. No. 2 one-way clutch (F2)	AT-193
Slippage or shuddering (3rd)	1. No. 1 clutch (C1)	AT-193
	2. No. 3 clutch (C3)	AT-193
	3. No. 1 one-way clutch (F1)	AT-193
Slippage or shuddering (4th)	1. No. 1 clutch (C1)	AT-193
	2. No. 2 clutch (C2)	AT-193
Slippage or shuddering (5th)	1. No. 2 clutch (C2)	AT-193
	2. No. 3 clutch (C3)	AT-193
	3. No. 1 brake (B1)	AT-193
Engine brake does not work only in 1st to 4th gear in D position	No. 1 clutch (C1)	AT-193
Engine brake does not work only in 1st gear in L position	1. Valve body assembly	AT-161
	2. No. 4 brake (B4)	AT-193
Engine brake does not work only in 2nd gear in 2 position	1. Valve body assembly	AT-161
	2. Brake No. 2 (B2)	AT-193
Engine brake does not work only in 3rd gear in 3 position	1. Valve body assembly	AT-161
	2. No. 1 brake (B1)	AT-193
No kick-down	Valve body assembly	AT-161

Symptom	Suspected area	See page
Shift point too high or too low	1. Shift solenoid valve (SLT)	AT-119
	2. Shift solenoid valve (SL1)	AT-84
	3. Valve body assembly	AT-161
Poor acceleration (All positions)	1. Shift solenoid valve (SLT)	AT-119
	2. Valve body assembly	AT-161
	3. Torque converter clutch	AT-186
Poor acceleration (5th)	1. No. 1 clutch (C1)	AT-193
	2. No. 3 clutch (C3)	AT-193
	3. No. 1 brake (B1)	AT-193
	4. Front planetary gear unit	AT-193
Engine stalls when starting off or stopping	1. Shift solenoid valve (SLU)	AT-135
	2. Valve body assembly	AT-161
	3. Torque converter clutch	AT-186

TERMINALS OF ECM

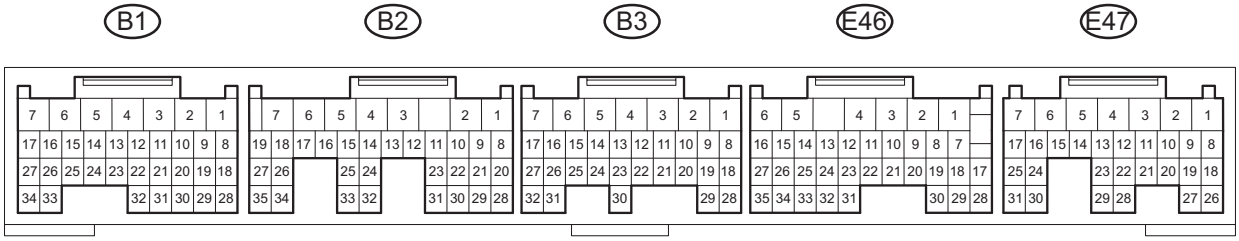

HINT:
The standard voltage of each ECM terminal is shown in the table below.
In the table, first follow the information under "Condition". Look under "Symbols (Terminal No.)" for the terminals to be inspected. The standard voltage between the terminals is shown under "Specified Condition".
Use the illustration above as a reference for the ECM terminals.

Standard voltage

Symbols (Terminal No.)	Wiring Color	Terminal Description	Condition	Specified Condition
STP (E47-15) - E1 (B3-1)	G-Y - BR	Stop light switch signal	Brake pedal is depressed	7.5 to 14 V
			Brake pedal is released	Below 1.5 V
L (E46-9) - E1 (B3-1)	B-L - BR	L shift position switch signal	Ignition switch ON and shift lever L position	11 to 14 V
			Ignition switch ON and shift lever other than L position	Below 1 V
2 (E46-10) - E1 (B3-1)	G-R - BR	2 shift position switch signal	Ignition switch ON and shift lever 2 or L positions	11 to 14 V
			Ignition switch ON and shift lever other than 2 and L positions	Below 1 V
R (E46-11) - E1 (B3-1)	R-Y - BR	R shift position switch signal	Ignition switch ON and shift lever R position	11 to 14 V
			Ignition switch ON and shift lever other than R position	Below 1 V
3 (E46-19) - E1 (B3-1)	W-R - BR	3 shift position switch signal	Ignition switch ON and shift lever 3 position	11 to 14 V
			Ignition switch ON and shift lever other than 3 position	Below 1 V
4 (E46-20) - E1 (B3-1)	B-O - BR	4 shift position switch signal	Ignition switch ON and shift lever 4 position	11 to 14 V
			Ignition switch ON and shift lever other than 4 position	Below 1 V

Symbols (Terminal No.)	Wiring Color	Terminal Description	Condition	Specified Condition
D (E46-21) - E1 (B3-1)	V - BR	D shift position switch signal	Ignition switch ON and shift lever D or 4 positions	11 to 14 V
			Ignition switch ON and shift lever other than D and 4 positions	Below 1 V
L4 (B3-13) - E1 (B3-1)	W-L - BR	Transfer L4 shift position switch signal	Ignition switch ON and transfer high and low shift lever L position	Below 1 V
			Ignition switch ON and transfer high and low shift lever other than L position	11 to 14 V
TFN (B2-25) - E1 (B3-1)	W - BR	N shift position switch signal	Ignition switch ON and transfer high and low shift lever N position	Below 1 V
			Ignition switch ON and transfer high and low shift lever other than N position	11 to 14 V
NSW (B2-8) - E1 (B3-1)	L-Y - BR	Park or neutral shift position switch signal	Ignition switch ON and shift lever P or N positions	Below 2 V
			Ignition switch ON and shift lever other than P and N positions	11 to 14 V
SR (B2-9) - E1 (B3-1)	P-L - BR	SR solenoid signal	5th gear	11 to 14 V
			1st gear	Below 1 V
S2 (B2-10) - E1 (B3-1)	W-L - BR	S2 solenoid signal	2nd or 3rd gear	11 to 14 V
			1st, 4th or 5th gear	Below 1 V
S1 (B2-11) - E1 (B3-1)	GR - BR	S1 solenoid signal	1st or 2nd gear	11 to 14 V
			3rd, 4th or 5th gear	Below 1 V
SLT+ (B2-13) - SLT- (B2-12)	LG-B - L-R	SLT solenoid signal	Engine is idling	Pulse generation (See waveform 1)
SLU+ (B2-15) - SLU- (B2-14)	R-B - R-W	SLU solenoid signal	5th (lock-up) gear	Pulse generation (See waveform 2)
SL2+ (B2-17) - SL2- (B2-16)	B-W - B-R	SL2 solenoid signal	Engine idling speed	Pulse generation (See waveform 3)
SL1+ (B2-19) - SL1- (B2-18)	G-B - B-Y	SL1 solenoid signal	Engine idling speed	Pulse generation (See waveform 4)
THO2 (B2-32) - E2 (B1-28)	L - W-G	No. 2 ATF temperature sensor signal	ATF temperature: 115°C (239°F) or more	Below 1.5 V
THO1 (B2-24) - E2 (B1-28)	Y-G - W-G	No. 1 ATF temperature sensor signal	ATF temperature: 115°C (239°F) or more	Below 1.5 V
SP2+ (B2-34) - SP2- (B2-26)	Y - L	Speed sensor (SP2) signal	Vehicle speed 12 mph (20 km/h)	Pulse generation (See waveform 5)
NT+ (B2-35) - NT- (B2-27)	P - V	Speed sensor (NT) signal	Engine is idling	Pulse generation (See waveform 6)

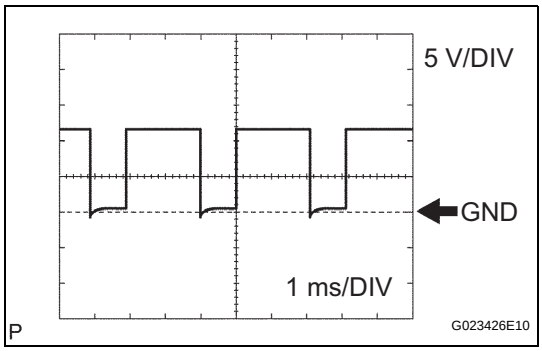

1. Waveform 1

Item	Condition
Terminal	SLT+ - SLT-
Tool setting	5 V/DIV, 1 ms/DIV
Vehicle condition	Engine idling speed

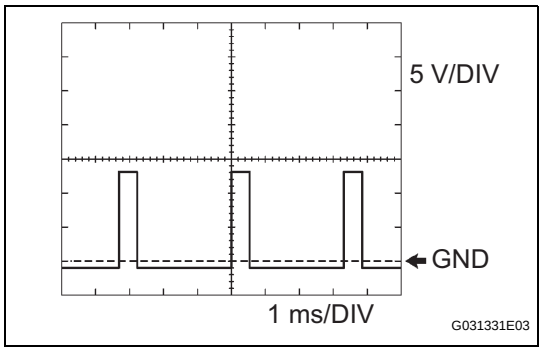

2. Waveform 2

Item	Condition
Terminal	SLU+ - SLU-
Tool setting	5 V/DIV, 1 ms/DIV
Vehicle condition	5th (lock-up) gear

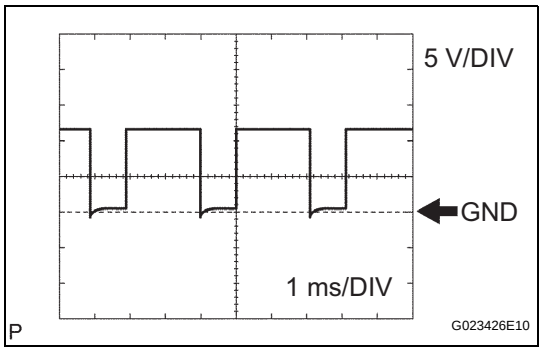

3. Waveform 3

Item	Condition
Terminal	SL2+ - SL2-
Tool setting	5 V/DIV, 1 ms/DIV
Vehicle condition	Engine idling speed

AT

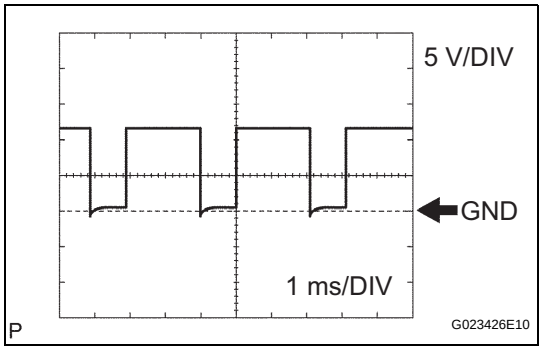

4. Waveform 4

Item	Condition
Terminal	SL1+ - SL1-
Tool setting	5 V/DIV, 1 ms/DIV
Vehicle condition	Engine idling speed

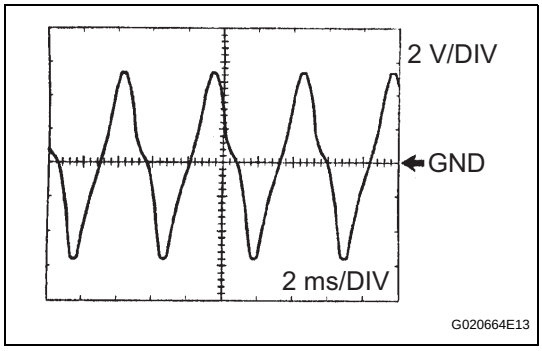

5. Waveform 5

Item	Condition
Terminal	SP2+ - SP2-
Tool setting	2 V/DIV, 2 ms/DIV
Vehicle condition	Vehicle speed 12 mph (20 km/h)

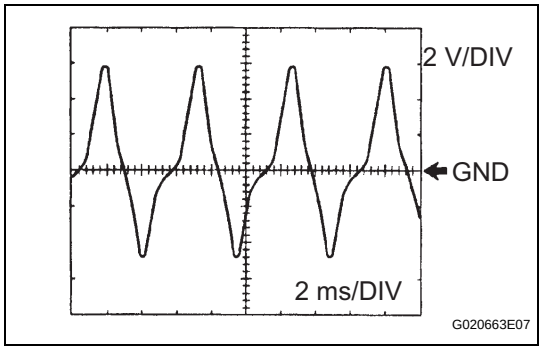

6. Waveform 6

Item	Condition
Terminal	NT+ - NT-
Tool setting	2 V/DIV, 2 ms/DIV
Vehicle condition	Engine idling speed

DIAGNOSIS SYSTEM

1. DESCRIPTION

(a) When troubleshooting On-Board Diagnostic (OBD II) vehicles, the vehicle must be connected to the intelligent tester (complying with SAE J1987). Various data output from the vehicle's ECM can then be read.

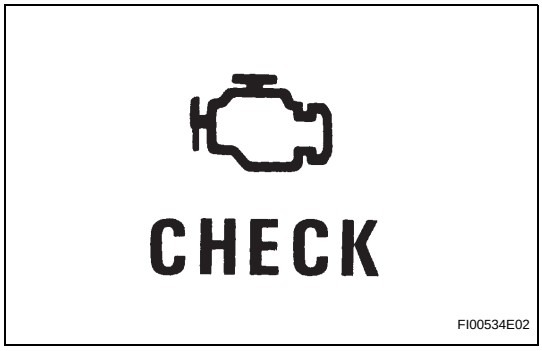

(b) OBD II regulations require that the vehicle's on-board computer illuminate the Malfunction Indicator Lamp (MIL) on the instrument panel when the computer detects a malfunction in:
1. The emission control system/components
2. The power train control components (which affect vehicle emissions)
3. The computer

In addition, the applicable Diagnostic Trouble Codes (DTCs) prescribed by SAE J2012 are recorded in the ECM memory.
If the malfunction does not recur in 3 consecutive trips, the MIL turns off automatically but the DTCs remain recorded in the ECM memory.

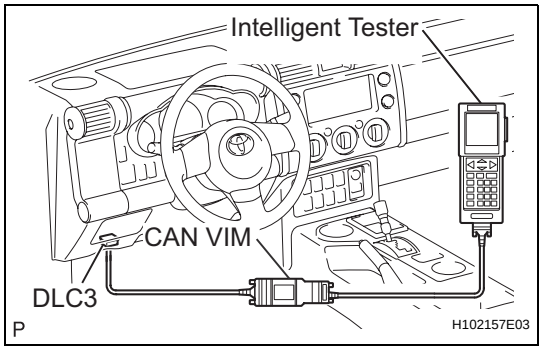

(c) To check DTCs, connect the intelligent tester to the Data Link Connector 3 (DLC3) of the vehicle. The intelligent tester displays DTCs, the freeze frame data and a variety of the engine data.
The DTCs and freeze frame data can be erased with the intelligent tester (See page AT-33).

(d) In order to enhance OBD function on vehicles and develop the Off-Board diagnosis system, CAN communication has been introduced in this system (CAN: Controller Area Network). It minimizes the gap between technician skills and vehicle technology. CAN is a network, which uses a pair of data transmission lines, spanning multiple computers and sensors. It allows high speed communication between the systems and simplification of the wire harness connection. Since this system is equipped with CAN communication, CAN VIM (VIM: Vehicle Interface Module) connecting with intelligent tester is necessary to display any information from the ECM on the tester. (Also communication between the intelligent tester and the ECM uses a CAN communication signal.) When confirming DTCs and any data of the ECM, connect the CAN VIM between the DLC3 and the intelligent tester.

AT

2. NORMAL MODE AND CHECK MODE

(a) The diagnosis system operates in "normal mode" during normal vehicle use. In normal mode, "2 trip detection logic" is used to ensure accurate detection of malfunctions. "Check mode" is also available to technicians as an option. In check mode, "1 trip detection logic" is used for simulating malfunction symptoms and increasing the system's ability to detect malfunctions, including intermittent malfunctions.

3. 2 TRIP DETECTION LOGIC

(a) When a malfunction is first detected, the malfunction is temporarily stored in the ECM memory (1st trip). If the ignition switch is turned OFF and then ON again, and the same malfunction is detected again, the MIL will illuminate.

4. FREEZE FRAME DATA

(a) Freeze frame data records the engine conditions (fuel system, calculated load, engine coolant temperature, fuel trim, engine speed, vehicle speed, etc.) when a malfunction is detected. When troubleshooting, freeze frame data can help determine if the vehicle was running or stopped, if the engine was warmed up or not, if the air-fuel ratio was Lean or Rich, and other data from the time the malfunction occurred.

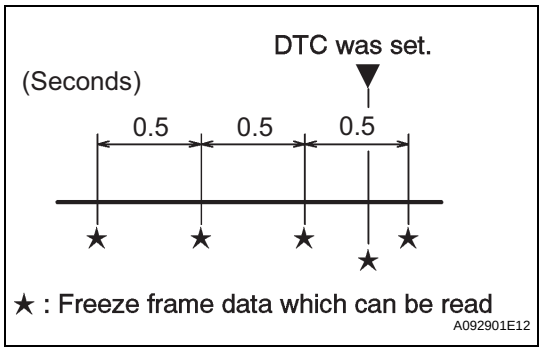

(b) The ECM records engine conditions in the form of freeze frame data every 0.5 seconds. Using the intelligent tester, five separate sets of freeze frame data, including the data values at the time when the DTC was set, can be checked.
- 3 data sets before the DTC was set
- 1 data set when the DTC was set
- 1 data set after the DTC was set

These data sets can be used to simulate the condition of the vehicle around the time the occurrence of the malfunction. The data may assist in identifying of the cause of the malfunction, and in judging whether it was temporary or not.

5. DATA LINK CONNECTOR 3 (DLC3)

(a) The vehicle's ECM uses the ISO 15765-4 communication protocol. The terminal arrangement of the DLC3 complies with SAE J1962 and matches the ISO 15765-4 format.

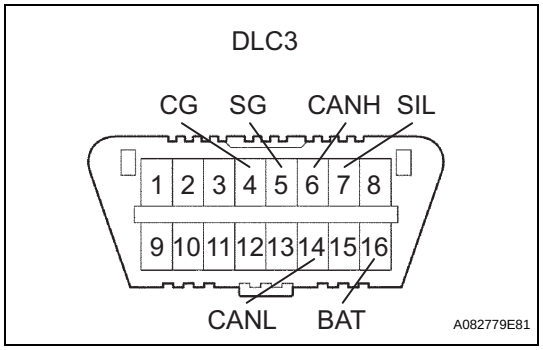

Symbols (Terminal No.)	Terminal Description	Condition	Specified Condition
SIL (7) - SG (5)	Bus "+" line	During transmission	Pulse generation
CG (4) - Body ground	Chassis ground	Always	Below 1 Ω

AT

Symbols (Terminal No.)	Terminal Description	Condition	Specified Condition
SG (5) - Body ground	Signal ground	Always	Below 1 Ω
BAT (16) - Body ground	Battery positive	Always	11 to 14 V
CANH (6) - CANL (14)	CAN bus line	Ignition switch OFF*	54 to 69 Ω
CANH (6) - CG (4)	HIGH-level CAN bus line	Ignition switch OFF*	200 Ω or higher
CANL (14) - CG (4)	LOW-level CAN bus line	Ignition switch OFF*	200 Ω or higher
CANH (6) - BAT (16)	HIGH-level CAN bus line	Ignition switch OFF*	6 kΩ or higher
CANL (14) - BAT (16)	LOW-level CAN bus line	Ignition switch OFF*	6 kΩ or higher

NOTICE:

***: Before measuring the resistance, leave the vehicle as is for at least 1 minute and do not operate the ignition switch, any other switches or the doors.**

If the result is not as specified, the DLC3 may have a malfunction. Repair or replace the harness and connector.

HINT:

Connect the cable of the intelligent tester to the DLC3, turn the ignition switch to the ON position and attempt to use the intelligent tester. If the screen displays UNABLE TO CONNECT TO VEHICLE, a problem exists in the vehicle side or the tester side.

If the communication is normal when the tester is connected to another vehicle, inspect the DLC3 on the original vehicle.

If the communication is still impossible when the tester is connected to another vehicle, the problem is probably in the tester itself. Consult the Service Department listed in the tester's instruction manual.

6. CHECK BATTERY VOLTAGE

Standard voltage:

11 to 14 V

(a) If the voltage is below 11 V, replace the battery before proceeding.

7. CHECK MIL

(a) Check that the MIL illuminates when turning the ignition switch ON.

If the MIL does not illuminate, there is a problem in the MIL circuit (See page ES-404).

(b) When the engine is started, the MIL should turn off.

8. ALL READINESS

(a) For this vehicle, using the intelligent tester allows readiness codes corresponding to all DTCs to be read. When diagnosis (normal or malfunctioning) has been completed, readiness codes are set. Enter the following menus: ENHANCED OBD II / MONITOR INFO on the intelligent tester.

AT

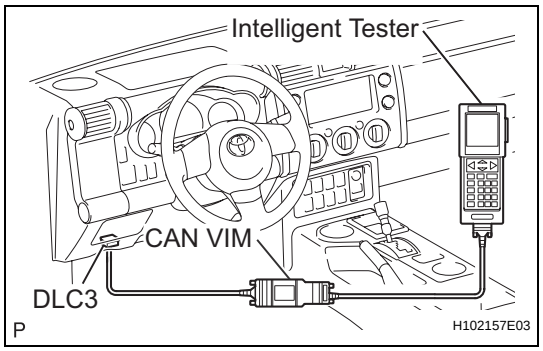

DTC CHECK / CLEAR

1. CHECK DTC

DTCs which are stored in the ECM can be displayed with the intelligent tester.

The tester can display pending DTCs and current DTCs. Some DTCs are not stored if the ECM does not detect a malfunction during consecutive driving cycles. However, malfunctions detected during a single driving cycle are stored as pending DTCs.

(a) Connect the intelligent tester together with the Controller Area Network Vehicle Interface Module (CAN VIN) to the DLC3.

(b) Turn the ignition switch to the ON position.

(c) Enter the following menus: DIAGNOSIS / ENHANCED OBD II / DTC INFO / CURRENT CODES (or PENDING CODE).

(d) Confirm the DTCs and freeze frame data and then write them down.

(e) Confirm the details of the DTCs (See page AT-41).

2. CLEAR DTC

(a) When using the intelligent tester:

(1) Connect the intelligent tester together with the Controller Area Network Vehicle Interface Module (CAN VIN) to the DLC3.

(2) Turn the ignition switch to the ON position.

(3) Enter the following menus: DIAGNOSIS / ENHANCED OBD II / DTC INFO / CLEAR CODES and press YES.

(b) When not using the intelligent tester:

(1) Disconnect the battery terminal or remove the EFI and ETCS fuses from the No. 2 engine room relay block for 60 seconds or more. However, if you disconnect the battery terminal, perform the "INITIALIZATION" procedure (See page AT-19).

No. 2 Engine Room Relay Block:

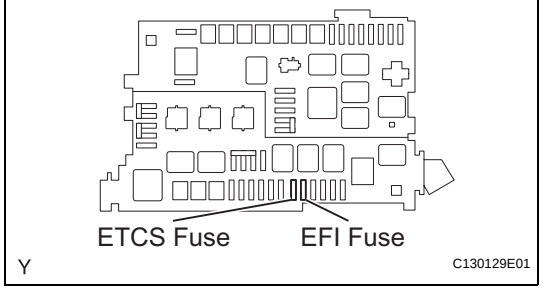

CHECK MODE PROCEDURE

1. DESCRIPTION

Check mode has a higher sensitivity to malfunctions and can detect malfunctions that normal mode cannot detect. Check mode can also detect all the malfunctions that normal mode can detect. In check mode, DTCs are detected with 1 trip detection logic.

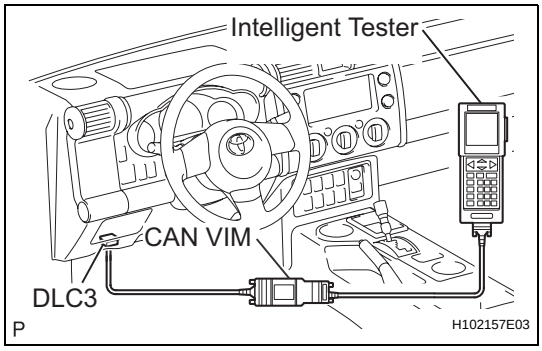

2. CHECK MODE PROCEDURE

(a) Ensure the following conditions:
  (1) Battery positive voltage 11 V or more
  (2) Throttle valve fully closed
  (3) Transmission in the P or N position
  (4) A/C switched off

(b) Turn the ignition switch off.

(c) Connect the intelligent tester together with the Controller Area Network Vehicle Interface Module (CAN VIM) to the DLC3.

(d) Turn the ignition switch to the ON position.

(e) Enter the following menus: DIAGNOSIS / ENHANCED OBD II / CHECK MODE.

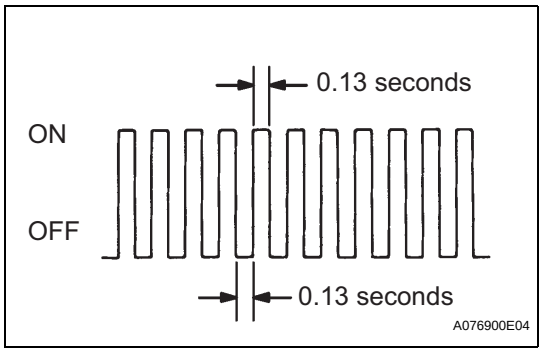

(f) Change the ECM to check mode. Make sure the MIL flashes as shown in the illustration.

NOTICE:

All recorded DTCs and freeze frame data will be erased if: 1) the intelligent tester is used to change the ECM from normal mode to check mode or vice-versa; or 2) during check mode, the ignition switch is turned from ON to ACC or LOCK.

Before entering check mode, make notes of the DTCs and freeze frame data.

(g) Start the engine. The MIL should turn off after the engine starts.

(h) Perform "MONITOR DRIVE PATTERN" for the ECT test (See page AT-21).
 (Or, simulate the conditions of the malfunction described by the customer).

(i) After simulating the malfunction conditions, use the intelligent tester diagnosis selector to check the DTC and freeze frame data.

AT

FAIL-SAFE CHART

1. FAIL-SAFE CHART

(a) This function minimizes the loss of the ECT functions when a malfunction occurs in each sensor or solenoid.

Malfunction Part	Function
DTC P0710, P0712 and P0713: No. 1 ATF Temperature Sensor	During a No. 1 ATF temperature sensor malfunction, up-shift to the 5th gear and flex lock-up clutch control are prohibited.
DTC P0722: Output Speed Sensor (SP2)	During an output speed sensor malfunction, shift control is effected through the input speed sensor signal (NT).
DTC P0751, P0756, P0771, P0973, P0974, P0976, P0977, P0985 and P0986: Shift Solenoid Valve S1, S2 and SR	The current to the failed solenoid valve is cut off and control is effected by operating the other solenoid valves with normal operation. Shift control is effected depending on the failed solenoid as described in the table below.
DTC P0748, P0776 and P0778: Shift Solenoid Valve SL1 and SL2	During a solenoid valve SL1 or SL2 malfunction, up-shift to the 5th gear is prohibited.
DTC P02714 and P2716: Shift Solenoid Valve SLT	During a solenoid valve SLT malfunction, the current to the solenoid valve is stopped. This stops line pressure optimal control, and shift shock increases. However, shifting is effected through normal clutch pressure control.
DTC P2757: Shift Solenoid Valve SLU	During a solenoid valve SLU malfunction, the current to the solenoid valve is stopped. This stops lock-up control and flex lock-up control, and fuel economy decreases.

(b) Fail-safe function:

If either of the shift solenoid valve circuits has an open or short failure, the ECM turns the other shift solenoid ON and OFF in order to shift into the gear positions shown in the table below.

In case of a short circuit, the ECM stops sending current to the short circuit solenoid.

Even if starting the engine again in the fail-safe mode, the gear position remains in the same position.

Position	Normal						Shift Solenoid S1 Malfunction					
	Gear	S1	S2	SR	SL1	SL2	Gear	S1	S2	SR	SL1	SL2
R	R	ON	OFF	OFF	OFF	ON	R	X	OFF	OFF	OFF	ON
D	1st	ON	OFF	OFF	OFF	ON	4th ↓ 3rd	X	OFF ↓ ON	OFF	OFF	ON
	2nd	ON	ON	OFF	OFF	ON	3rd	X	ON	OFF	OFF	ON
	3rd	OFF	ON	OFF	OFF	ON	3rd	X	ON	OFF	OFF	ON
	4th	OFF	OFF	OFF	OFF	ON	4th	X	OFF	OFF	OFF	ON
	5th	OFF	OFF	ON	ON	OFF	5th	X	OFF	ON	ON	OFF
4	1st	ON	OFF	OFF	OFF	ON	4th ↓ 3rd	X	OFF ↓ ON	OFF	OFF	ON
	2nd	ON	ON	OFF	OFF	ON	3rd	X	ON	OFF	OFF	ON
	3rd	OFF	ON	OFF	OFF	ON	3rd	X	ON	OFF	OFF	ON
	4th	OFF	OFF	OFF	OFF	ON	4th	X	OFF	OFF	OFF	ON

Position	Normal						Shift Solenoid S1 Malfunction					
	Gear	S1	S2	SR	SL1	SL2	Gear	S1	S2	SR	SL1	SL2
3	1st	ON	OFF	OFF	OFF	ON	3rd ↓ 3rd E/B	X	OFF ↓ ON	OFF	OFF	ON ↓ OFF
	2nd	ON	ON	OFF	OFF	ON	3rd ↓ 3rd E/B	X	ON	OFF	OFF	ON ↓ OFF
	3rd E/B	OFF	ON	OFF	OFF	OFF	3rd E/B	X	ON	OFF	OFF	OFF
2	1st	ON	OFF	OFF	OFF	ON	1st	X	OFF	OFF	OFF	ON
	2nd E/B	ON	ON	ON	OFF	OFF	3rd E/B	X	ON	ON	OFF	OFF
L	1st E/B	ON	OFF	OFF	OFF	OFF	1st E/B	X	OFF	OFF	OFF	OFF

X: Malfunction

Position	Shift Solenoid S2 Malfunction						Shift Solenoid SR Malfunction					
	Gear	S1	S2	SR	SL1	SL2	Gear	S1	S2	SR	SL1	SL2
R	R	ON	X	OFF	OFF	ON	R	ON	OFF	X	OFF	ON
D	1st	ON	X	OFF	OFF	ON	1st	ON	OFF	X	OFF	ON
	1st ↓ 4th	ON ↓ OFF	X	OFF	OFF	ON	2nd	ON	ON	X	OFF	ON
	4th	OFF	X	OFF	OFF	ON	3rd	OFF	ON	X	OFF	ON
	4th	OFF	X	OFF	OFF	ON	4th	OFF	OFF	X	OFF	ON
	5th	OFF	X	ON	ON	OFF	4th	OFF	OFF	X	ON	OFF
4	1st	ON	X	OFF	OFF	ON	1st	ON	OFF	X	OFF	ON
	1st ↓ 4th	ON ↓ OFF	X	OFF	OFF	ON	2nd	ON	ON	X	OFF	ON
	4th	OFF	X	OFF	OFF	ON	3rd	OFF	ON	X	OFF	ON
	4th	OFF	X	OFF	OFF	ON	4th	OFF	OFF	X	OFF	ON
3	1st	ON	X	OFF	OFF	ON	1st	ON	OFF	X	OFF	ON
	1st ↓ 3rd E/B	ON ↓ OFF	X	OFF	OFF	ON ↓ OFF	2nd	ON	ON	X	OFF	ON
	3rd E/B	OFF	X	OFF	OFF	OFF	3rd E/B ↓ 3rd	OFF	ON	X	OFF	OFF ↓ ON
2	1st	ON	X	OFF	OFF	ON	1st	ON	OFF	X	OFF	ON
	2nd E/B ↓ 4th	ON ↓ OFF	X	ON	OFF	OFF ↓ ON	2nd	ON	ON	X	OFF	OFF
L	1st E/B	ON	X	OFF	OFF	OFF	1st E/B	ON	OFF	X	OFF	OFF

X: Malfunction

Position	Shift Solenoid S1 and S2 Malfunction						Shift Solenoid S1 and SR Malfunction					
	Gear	S1	S2	SR	SL1	SL2	Gear	S1	S2	SR	SL1	SL2
R	R	X	X	OFF	OFF	ON	R	X	OFF	X	OFF	ON
D	4th	X	X	OFF	OFF	ON	4th ↓ 3rd	X	OFF ↓ ON	X	OFF	ON
	4th	X	X	OFF	OFF	ON	3rd	X	ON	X	OFF	ON
	4th	X	X	OFF	OFF	ON	3rd	X	ON	X	OFF	ON
	4th	X	X	OFF	OFF	ON	4th	X	OFF	X	OFF	ON
	5th	X	X	ON	ON	OFF	4th	X	OFF	X	ON ↓ OFF	OFF ↓ ON

AT

Position	Shift Solenoid S1 and S2 Malfunction						Shift Solenoid S1 and SR Malfunction					
	Gear	S1	S2	SR	SL1	SL2	Gear	S1	S2	SR	SL1	SL2
4	4th	X	X	OFF	OFF	ON	4th ↓ 3rd	X	OFF ↓ ON	X	OFF	ON
	4th	X	X	OFF	OFF	ON	3rd	X	ON	X	OFF	ON
	4th	X	X	OFF	OFF	ON	3rd	X	ON	X	OFF	ON
	4th	X	X	OFF	OFF	ON	4th	X	OFF	X	OFF	ON
3	3rd ↓ 3rd E/B	X	X	OFF	OFF	ON ↓ OFF	3rd	X	OFF ↓ ON	X	OFF	ON
	3rd ↓ 3rd E/B	X	X	OFF	OFF	ON ↓ OFF	3rd	X	ON	X	OFF	ON
	3rd E/B	X	X	OFF	OFF	OFF	3rd E/B ↓ 3rd	X	ON	X	OFF	OFF ↓ ON
2	1st	X	X	OFF	OFF	ON	1st	X	OFF	X	OFF	ON
	4th	X	X	ON	OFF	OFF ↓ ON	2nd	X	ON	X	OFF	OFF
L	1st E/B	X	X	OFF	OFF	OFF	1st E/B	X	OFF	X	OFF	OFF

X: Malfunction

Position	Shift Solenoid S2 and SR Malfunction						Shift Solenoid S1, S2 and SR Malfunction					
	Gear	S1	S2	SR	SL1	SL2	Gear	S1	S2	SR	SL1	SL2
R	R	ON	X	X	OFF	ON	R	X	X	X	OFF	ON
D	1st	ON	X	X	OFF	ON	4th	X	X	X	OFF	ON
	1st ↓ 4th	ON ↓ OFF	X	X	OFF	ON	4th	X	X	X	OFF	ON
	4th	OFF	X	X	OFF	ON	4th	X	X	X	OFF	ON
	4th	OFF	X	X	OFF	ON	4th	X	X	X	OFF	ON
	4th	OFF	X	X	ON ↓ OFF	OFF ↓ ON	4th	X	X	X	ON ↓ OFF	OFF ↓ ON
4	1st	ON	X	X	OFF	ON	4th	X	X	X	OFF	ON
	1st ↓ 4th	ON ↓ OFF	X	X	OFF	ON	4th	X	X	X	OFF	ON
	4th	OFF	X	X	OFF	ON	4th	X	X	X	OFF	ON
	4th	OFF	X	X	OFF	ON	4th	X	X	X	OFF	ON
3	1st	ON	X	X	OFF	ON	3rd	X	X	X	OFF	ON
	1st ↓ 3rd	ON ↓ OFF	X	X	OFF	ON	3rd	X	X	X	OFF	ON
	3rd E/B ↓ 3rd	OFF	X	X	OFF	OFF ↓ ON	3rd E/B ↓ 3rd	X	X	X	OFF	OFF ↓ ON
2	1st	ON	X	X	OFF	ON	1st	X	X	X	OFF	ON
	1st E/B ↓ 1st	ON	X	X	OFF	OFF ↓ ON	1st E/B ↓ 1st	X	X	X	OFF	OFF ↓ ON
L	1st E/B	ON	X	X	OFF	OFF	1st E/B	X	X	X	OFF	OFF

X: Malfunction

AT

HINT:

- ↓: Condition in the electrical malfunction is shown above "↓".
- ↓: Condition in the fail-safe mode is shown below "↓".
- E/B: Engine brake.

DATA LIST / ACTIVE TEST

1. DATA LIST

HINT:

According to the DATA LIST displayed on the intelligent tester, you can read the values of components, such as the switches, sensors and actuators, without removing any parts. Reading the DATA LIST as a first step of troubleshooting is one method of shortening labor time.

NOTICE:

In the table below, the values listed under "Normal Condition" are for reference only. Do not depend solely on these reference values when judging whether a part is faulty or not.

(a) Warm up the engine.

(b) Turn the ignition switch off.

(c) Connect the intelligent tester together with the CAN VIM (controller area network vehicle interface module) to the DLC3.

(d) Turn the ignition switch to the ON position.

(e) Push the "ON" button of the tester.

(f) Select the items "DIAGNOSIS / ENHANCED OBD II / DATA LIST / A/T".

(g) According to the display on the tester, read the "DATA LIST".

Item	Measurement Item/ Display (Range)	Normal Condition	Diagnostic Note
SPD (SP2)	Counter Gear Speed / min.: 0 mph (0 km/h) max.: 158 mph (255 km/h)	Vehicle stopped: 0 mph (0 km/h)	-
SPD (NT)	Input Turbine Speed/ display: 50 rpm	[HINT] • Lock-Up ON (After warming up the engine); Input turbine speed (NT) equal to the engine speed. • Lock-Up OFF (Idling in N position); Input turbine speed (NT) nearly equal to the engine speed.	-
PNP SW [NSW]	PNP Switch Status/ ON or OFF	Shift lever position is; P or N: ON Except P and N: OFF	When the shift lever position displayed on the intelligent tester differs from the actual position, adjustment of the PNP switch or the shift cable may be incorrect. HINT: When the failure still occurs even after adjusting these parts. (See page AT-45)
STOP LIGHT SW	Stop Light Switch Status/ ON or OFF	• Brake Pedal is depressed: ON • Brake Pedal is released: OFF	-
SHIFT	ECM gear shift command/ 1st, 2nd, 3rd, 4th or 5th	Shift lever position is; • L: 1st • 2: 1st or 2nd • 3: 1st, 2nd or 3rd • 4: 1st, 2nd, 3rd or 4th • D: 1st, 2nd, 3rd, 4th or 5th	-
REVERSE	PNP Switch Status/ ON or OFF	Shift lever position is; R: ON Except R: OFF	Same as PNP SW [NSW]

Item	Measurement Item/ Display (Range)	Normal Condition	Diagnostic Note
DRIVE	PNP Switch Status/ ON or OFF	Shift lever position is; D or 4: ON Except D and 4: OFF	Same as PNP SW [NSW]
4TH/DRIVE	PNP Switch Status/ ON or OFF	Shift lever position is; 4: ON Except 4: OFF	Same as PNP SW [NSW]
3RD	PNP Switch Status/ ON or OFF	Shift lever position is; 3: ON Except 3: OFF	Same as PNP SW [NSW]
2ND	PNP Switch Status/ ON or OFF	Shift lever position is; 2 or L: ON Except 2 and L: OFF	Same as PNP SW [NSW]
LOW	PNP Switch Status/ ON or OFF	Shift lever position is; L: ON Except L: OFF	Same as PNP SW [NSW]
AT OIL TEMP1	No. 1 ATF Temperature Sensor Value/ min.: -40°C (-40°F) max.: 215°C (419°F)	• After Stall Test; Approximately 80°C (176°F) • Equal to ambient temperature during cold soak	If the value is "-40°C (-40°F)" or "150°C (302°F) or more", No. 1 ATF temperature sensor circuit is open or short.
AT OIL TEMP2	No. 2 ATF Temperature Sensor Value/ min.: -40°C (-40°F) max.: 215°C (419°F)	• After Stall Test; Approximately 80°C (176°F) • Equal to ambient temperature during cold soak	If the value is "-40°C (-40°F)" or "150°C (302°F) or more", No. 2 ATF temperature sensor circuit is open or short.
LOCK UP	Lock-up status/ ON or OFF	• Lock-up: ON • Expect lock-up: OFF	-
LOCK UP SOL	Lock Up Solenoid Status/ ON or OFF	• Lock Up: ON • Except Lock Up: OFF	-
SOLENOID (SLU)	Shift Solenoid SLU Status/ ON or OFF	• Lock Up: ON • Except Lock Up: OFF	-
SOLENOID (SLT)	Shift Solenoid SLT Status/ ON or OFF	• Accelerator pedal is depressed: OFF • Accelerator pedal is released: ON	-

2. ACTIVE TEST

HINT:

Performing the ACTIVE TEST using the intelligent tester allows components, such as the relay, VSV, and actuator, to be operated without removing any parts. Performing the ACTIVE TEST as a first step of troubleshooting is one method of shortening labor time. It is possible to display the DATA LIST during the ACTIVE TEST.

(a) Warm up the engine.
(b) Turn the ignition switch off.
(c) Connect the intelligent tester together with the CAN VIM (controller area network vehicle interface module) to the DLC3.
(d) Turn the ignition switch to the ON position.
(e) Push the "ON" button of the tester.
(f) Select the items "DIAGNOSIS / ENHANCED OBD II / ACTIVE TEST".

AT

(g) According to the display on the tester, perform the "ACTIVE TEST".

Item	Test Details	Diagnostic Note
SOLENOID (SLU)	[Test Details] Operate the shift solenoid SLU [Vehicle Condition] • Vehicle Stopped. • Shift lever P or N position	-
SOLENOID (SLT)*	[Test Details] Operate the shift solenoid SLT and raise the line pressure. [Vehicle Condition] • Vehicle Stopped. • Engine Idling HINT: OFF: Line pressure up (When the active test of "SOLENOID (SLT)" is performed, the ECM commands the SLT solenoid to turn off). ON: No action (normal operation)	-
SOLENOID (S1)	[Test Details] Operate the shift solenoid S1 [Vehicle Condition] • Vehicle Stopped. • Shift lever P or N position	-
SOLENOID (S2)	[Test Details] Operate the shift solenoid S2 [Vehicle Condition] • Vehicle Stopped. • Shift lever P or N position	-
LOCK UP	[Test Details] Control the shift solenoid SLU to set the automatic transmission to the lock-up condition. [Vehicle Condition] Vehicle Speed: 36 mph (60 km/h) or more	Possible to check the SLU operation.
SHIFT	[Test Details] Operate the shift solenoid valve and set each shift position manually. [Vehicle Condition] Vehicle Speed: Less than 30 mph (50 km/h) [Others] • Press →button: Shift up • Press ←button: Shift down	Possible to check the operation of the shift solenoid valves. HINT: Shifting to the 5th gear is possible only when the vehicle is stationary with the engine idling.
SOLENOID (SR)	[Test Details] Operate the shift solenoid SR [Vehicle Condition] • Vehicle Stopped. • Shift lever P or N position	-
SOLENOID (SL1)	[Test Details] Operate the shift solenoid SL1 [Vehicle Condition] • Vehicle Stopped. • Shift lever P or N position	-
SOLENOID (SL2)	[Test Details] Operate the shift solenoid SL2 [Vehicle Condition] • Vehicle Stopped. • Shift lever P or N position	-

*: "SOLENOID (SLT)" in the ACTIVE TEST is performed to check the line pressure changes by connecting SST to the automatic transmission, which is used in the HYDRAULIC TEST (See page AT-18) as well.

HINT:
The pressure values in ACTIVE TEST and HYDRAULIC TEST are different from each other.

DIAGNOSTIC TROUBLE CODE CHART

If a DTC is displayed during the DTC check, check the circuit listed in the table below and proceed to the page given.
HINT:

- *1: "Comes on" means that the MIL illuminates.
- *2: "DTC stored" means that the ECM memorizes the malfunction code if the DTC detection condition(s) are met.
- These DTCs may be output when the clutch, brake and gear components, etc., inside the automatic transmission are damaged.

AUTOMATIC TRANSMISSION SYSTEM

DTC No.	Detection Item	Trouble Areas	MIL *1	Memory *2	See page
P0705	Transmission Range Sensor Circuit Malfunction (PRNDL Input)	- Open or short in park/neutral position switch circuit - Park/neutral position switch - ECM	Comes on	DTC stored	AT-45
P0710	Transmission Fluid Temperature Sensor "A" Circuit	- Open or short in No. 1 ATF temperature sensor circuit - Transmission wire (No. 1 ATF temperature sensor) - ECM	Comes on	DTC stored	AT-51
P0711	Transmission Fluid Temperature Sensor "A" Performance	- Transmission wire (No. 1 ATF temperature sensor) - ECM	Comes on	DTC stored	AT-56
P0712	Transmission Fluid Temperature Sensor "A" Circuit Low Input	- Short in No. 1 ATF temperature sensor circuit - Transmission wire (No. 1 ATF temperature sensor) - ECM	Comes on	DTC stored	AT-51
P0713	Transmission Fluid Temperature Sensor "A" Circuit High Input	- Open in No. 1 ATF temperature sensor circuit - Transmission wire (No. 1 ATF temperature sensor) - ECM	Comes on	DTC stored	AT-51
P0717	Input Speed Sensor Circuit No Signal	- Open or short in speed sensor (NT) circuit - Speed sensor (NT) - ECM	Comes on	DTC stored	AT-59
P0722	Output Speed Sensor Circuit No Signal	- Open or short in speed sensor (SP2) circuit - Speed sensor (SP2) - ECM	Comes on	DTC stored	AT-64
P0748	Pressure Control Solenoid "A" Electrical (Shift Solenoid Valve SL1)	- Open or short in shift solenoid valve SL1 circuit - Shift solenoid valve SL1 - ECM	Comes on	DTC stored	AT-69

DTC No.	Detection Item	Trouble Areas	MIL *1	Memory *2	See page
P0751	Shift Solenoid "A" Performance (Shift Solenoid Valve S1)	- Shift solenoid valve S1 remains open or closed - Shift solenoid valve SLT remains open or closed - Valve body is blocked - Automatic transmission (clutch, brake or gear, etc.)	Comes on	DTC stored	AT-72
P0756	Shift Solenoid "B" Performance (Shift Solenoid Valve S2)	- Shift solenoid valve S2 remains open or closed - Shift solenoid valve SLT remains open or closed - Valve body is blocked - Automatic transmission (clutch, brake or gear, etc.)	Comes on	DTC stored	AT-78
P0771	Shift Solenoid "E" Performance (Shift Solenoid Valve SR)	- Shift solenoid valve SR remains open or closed - Shift solenoid valve SL1 remains open or closed - Shift solenoid valve SLT remains open or closed - Valve body is blocked - Automatic transmission (clutch, brake or gear, etc.)	Comes on	DTC stored	AT-84
P0776	Pressure Control Solenoid "B" Performance (Shift Solenoid Valve SL2)	- Shift solenoid valve SL2 remains open - Shift solenoid valve SLT remains open or closed - Valve body is blocked - Automatic transmission (clutch, brake or gear, etc.)	Comes on	DTC stored	AT-89
P0778	Pressure Control Solenoid "B" Electrical (Shift Solenoid Valve SL2)	- Open or short in shift solenoid valve SL2 circuit - Shift solenoid valve SL2 - ECM	Comes on	DTC stored	AT-94
P0781	1-2 Shift (1-2 Shift Valve)	- Valve body is blocked up or stuck (1-2 shift valve) - Shift solenoid valve SLT remains open or closed - Automatic transmission (clutch, brake or gear, etc.)	Comes on	DTC stored	AT-98

DTC No.	Detection Item	Trouble Areas	MIL *1	Memory *2	See page
P0818	Driveline Disconnect Switch Input Circuit	- Short in No. 2 transfer indicator switch (Transfer neutral position switch) circuit - No. 2 transfer indicator switch - Combination meter - ECM	Comes on	DTC stored	AT-103
P0973	Shift Solenoid "A" Control Circuit Low (Shift Solenoid Valve S1)	- Short in shift solenoid valve S1 circuit - Shift solenoid valve S1 - ECM	Comes on	DTC stored	AT-107
P0974	Shift Solenoid "A" Control Circuit High (Shift Solenoid Valve S1)	- Open in shift solenoid valve S1 circuit - Shift solenoid valve S1 - ECM	Comes on	DTC stored	AT-107
P0976	Shift Solenoid "B" Control Circuit Low (Shift Solenoid Valve S2)	- Short in shift solenoid valve S2 circuit - Shift solenoid valve S2 - ECM	Comes on	DTC stored	AT-111
P0977	Shift Solenoid "B" Control Circuit High (Shift Solenoid Valve S2)	- Open in shift solenoid valve S2 circuit - Shift solenoid valve S2 - ECM	Comes on	DTC stored	AT-111
P0985	Shift Solenoid "E" Control Circuit Low (Shift Solenoid Valve SR)	- Short in shift solenoid valve SR circuit - Shift solenoid valve SR - ECM	Comes on	DTC stored	AT-115
P0986	Shift Solenoid "E" Control Circuit High (Shift Solenoid Valve SR)	- Open in shift solenoid valve SR circuit - Shift solenoid valve SR - ECM	Comes on	DTC stored	AT-115
P2714	Pressure Control Solenoid "D" Performance (Shift Solenoid Valve SLT)	- Shift solenoid valve SLT remains open or closed - Shift solenoid valve S1, S2, SR, SL1 or SL2 remains open or closed - Valve body is blocked - Automatic transmission (clutch, brake or gear, etc.)	Comes on	DTC stored	AT-119
P2716	Pressure Control Solenoid "D" Electrical (Shift Solenoid Valve SLT)	- Open or short in shift solenoid valve SLT circuit - Shift solenoid valve SLT - ECM	Comes on	DTC stored	AT-126

DTC No.	Detection Item	Trouble Areas	MIL *1	Memory *2	See page
P2740	Transmission Fluid Temperature Sensor "B" Circuit	- Open or short in No. 2 ATF temperature sensor circuit - No. 2 ATF temperature sensor - ECM	Comes on	DTC stored	AT-130
P2742	Transmission Fluid Temperature Sensor "B" Circuit Low Input	- Short in No. 2 ATF temperature sensor circuit - No. 2 ATF temperature sensor - ECM	Comes on	DTC stored	AT-130
P2743	Transmission Fluid Temperature Sensor "B" Circuit High Input	- Open in No. 2 ATF temperature sensor circuit - No. 2 ATF temperature sensor - ECM	Comes on	DTC stored	AT-130
P2757	Torque Converter Clutch Pressure Control Solenoid Performance (Shift Solenoid Valve SLU)	- Shift solenoid valve SLU remains open or closed - Valve body is blocked - Shift solenoid valve SLU - Torque converter clutch - Automatic transmission (clutch, brake or gear, etc.) - Line pressure is too low	Comes on	DTC stored	AT-135
P2759	Torque Converter Clutch Pressure Control Solenoid Control Circuit Electrical (Shift Solenoid Valve SLU)	- Open or short in shift solenoid valve SLU circuit - Shift solenoid valve SLU - ECM	Comes on	DTC stored	AT-140
P2772	Transfer "L4" Switch Circuit	- Short in No. 1 transfer indicator switch (Transfer L4 position switch) circuit - No. 1 transfer indicator switch - ECM	Comes on	DTC stored	AT-144

DTC	P0705	Transmission Range Sensor Circuit Malfunction (PRNDL Input)

DESCRIPTION

The park/neutral position switch detects the shift lever position and sends signals to the ECM.

DTC No.	DTC Detection Conditions	Trouble Areas
P0705	When any one of following conditions (A) to (C) is met (2-trip detection logic): (A) Any 2 or more of the following signals are ON simultaneously. – NSW input signal is ON. – R input signal is ON. – D input signal is ON. – 3 input signal is ON. – 2 input signal is ON. (B) All switches are OFF simultaneously for P (NSW), R, N (NSW), D, 3 and 2 positions. (C) When NSW or R input signal is ON, 4 or L input signal is ON.	• Open or short in park/neutral position switch circuit • Park/neutral position switch • ECM

MONITOR DESCRIPTION

The DTC indicates a problem with the park/neutral position switch and the wire harness in the park/neutral position switch circuit.
For security, the park/neutral position switch detects the shift lever position so that the engine can be started only when the vehicle is in the P or N shift position.
When the park/neutral position switch sends more than one signal at a time from switch positions P, R, N, D, 3 or 2, the ECM interprets this as a fault in the switch. The ECM will turn on the MIL and store the DTC.

MONITOR STRATEGY

Related DTCs	P0705: Park/neutral position switch/Verify switch input
Required sensors/Components	Park/neutral position switch
Frequency of operation	Continuous
Duration	Conditions (A) and (C): 2 seconds Condition (B): 60 seconds
MIL operation	2 driving cycles
Sequence of operation	None

AT

TYPICAL ENABLING CONDITIONS

The monitor will run whenever the following DTCs are not present.	None
Ignition switch	ON
Battery voltage	10.5 V or more

TYPICAL MALFUNCTION THRESHOLDS

One of the following conditions is met: Condition (A), (B) or (C)

Condition (A)

Number of the following signals input at the same time	2 or more
Park/neutral position switch	ON
R switch	ON
D switch	ON
3 switch	ON

2 switch	ON

Condition (B)

All of following conditions are met

Park/neutral position switch	OFF
R switch	OFF
D switch	OFF
3 switch	OFF
2 switch	OFF

Condition (C)

Both (i) and (ii) are met

(i) One of following conditions is met

Park/neutral position switch	ON
R switch	ON

(ii) One of following conditions is met

4 switch	ON
L switch	ON

COMPONENT OPERATING RANGE

Park/neutral position switch	The park/neutral position switch sends only one signal to the ECM

WIRING DIAGRAM

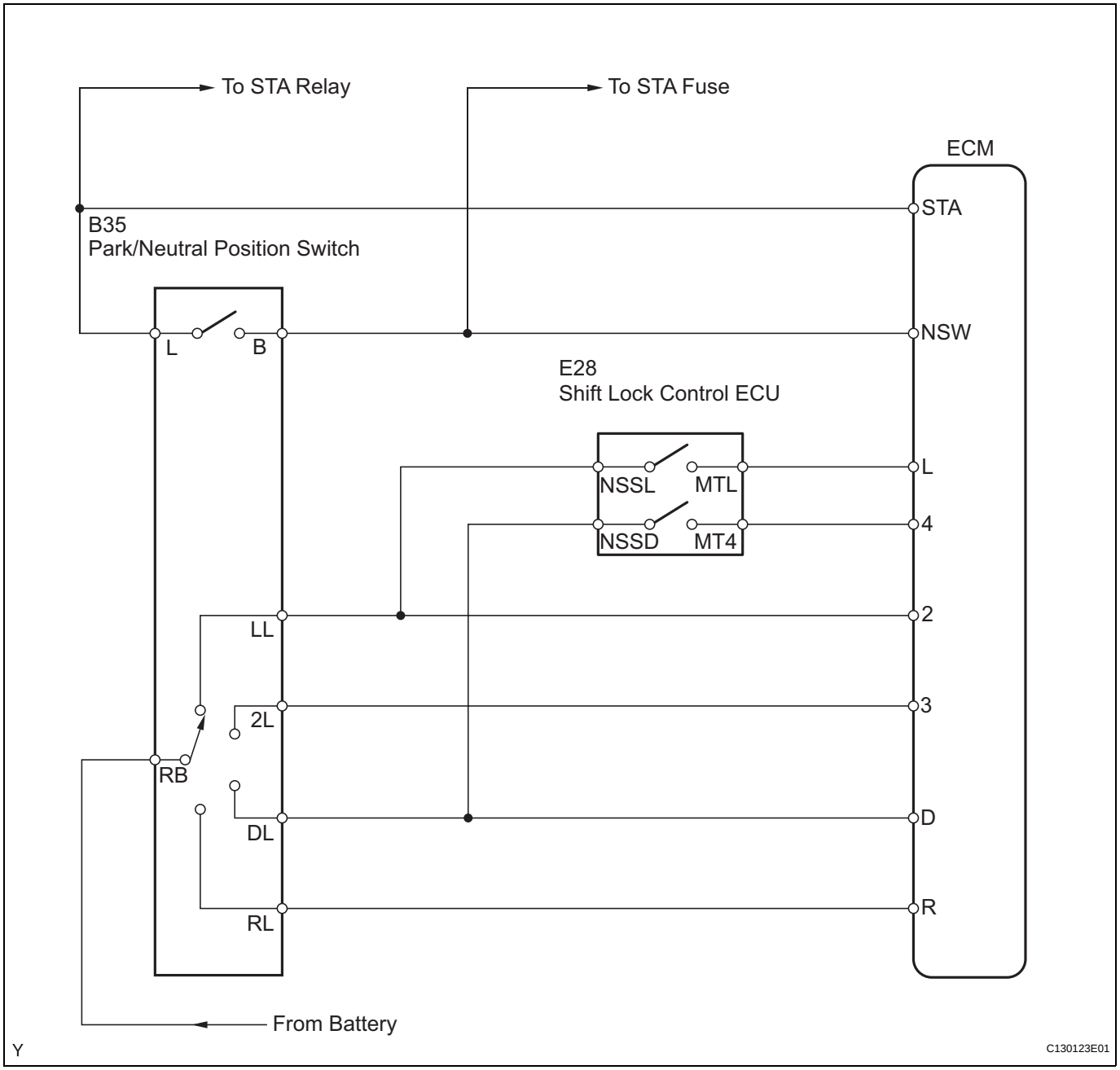

INSPECTION PROCEDURE

HINT:

According to the DATA LIST displayed on the intelligent tester, you can read the values of components, such as the switches, sensors and actuators, without removing any parts. Reading the DATA LIST as a first step of troubleshooting is one method of shortening labor time.

NOTICE:

In the table below, the values listed under "Normal Condition" are for reference only. Do not depend solely on these reference values when judging whether a part is faulty or not.

1. Connect the intelligent tester together with the CAN VIM (Controller Area Network Vehicle Interface Module) to the DLC3.
2. Turn the ignition switch to the ON position.
3. Push the "ON" button of the tester.
4. Select the items "DIAGNOSIS / ENHANCED OBD II / DATA LIST / A/T".

AT

5. According to the display on the tester, read the "DATA LIST".

Item	Measurement Item/ Display (Range)	Normal Condition	Diagnostic Note
PNP SW [NSW]	PNP Switch Status/ ON or OFF	Shift lever position is; P or N: ON Except P and N: OFF	When the shift lever position displayed on the intelligent tester differs from the actual position, adjustment of the PNP switch or the shift cable may be incorrect.
REVERSE	PNP Switch Status/ ON or OFF	Shift lever position is; R: ON Except R: OFF	
DRIVE	PNP Switch Status/ ON or OFF	Shift lever position is; D or 4: ON Except D and 4: OFF	
4th/DRIVE	PNP Switch Status/ ON or OFF	Shift lever position is; 4: ON Except 4: OFF	
3RD	PNP Switch Status/ ON or OFF	Shift lever position is; 3: ON Except 3: OFF	
2ND	PNP Switch Status/ ON or OFF	Shift lever position is; 2 or L: ON Except 2 and L: OFF	
LOW	PNP Switch Status/ ON or OFF	Shift lever position is; L: ON Except L: OFF	

1 INSPECT PARK/NEUTRAL POSITION SWITCH ASSEMBLY

Switch Side:

(Connector Front View)

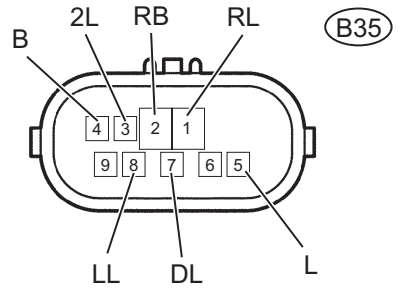

C130119E05

(a) Disconnect the park/neutral position switch connector.
(b) Measure the resistance when the shift lever is moved to each position.

Standard resistance

Shift Position	Tester Connection	Specified Condition
P or N	4 (B) - 5 (L)	Below 1 Ω
Except P and N	4 (B) - 5 (L)	10 kΩ or higher
R	1 (RL) - 2 (RB)	Below 1 Ω
Except R	1 (RL) - 2 (RB)	10 kΩ or higher
D or 4	2 (RB) - 7 (DL)	Below 1 Ω
Except D and 4	2 (RB) - 7 (DL)	10 kΩ or higher
3	2 (RB) - 3 (2L)	Below 1 Ω
Except 3	2 (RB) - 3 (2L)	10 kΩ or higher
2 or L	2 (RB) - 8 (LL)	Below 1 Ω
Except 2 and L	2 (RB) - 8 (LL)	10 kΩ or higher

NG → **REPLACE PARK/NEUTRAL POSITION SWITCH ASSEMBLY**

OK

AT

2 INSPECT SHIFT LOCK CONTROL ECU SUB-ASSEMBLY

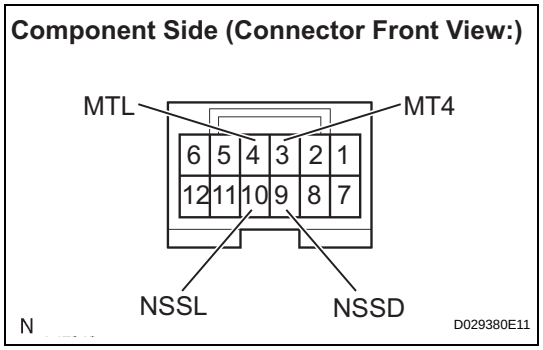

(a) Connect the park/neutral position switch connector.
(b) Disconnect the shift lock control ECU connector.
(c) Measure the resistance when the shift lever is moved to each position.

Standard resistance

Shift Position	Tester Connection	Specified Condition
D	9 (NSSD) - 3 (MT4)	10 kΩ or higher
4	9 (NSSD) - 3 (MT4)	Below 1 Ω
2	10 (NSSL) - 4 (MTL)	10 kΩ or higher
L	10 (NSSL) - 4 (MTL)	Below 1 Ω

NG → **REPLACE SHIFT LOCK CONTROL ECU SUB-ASSEMBLY**

OK

3 CHECK HARNESS AND CONNECTOR (PARK/NEUTRAL POSITION SWITCH - ECM)

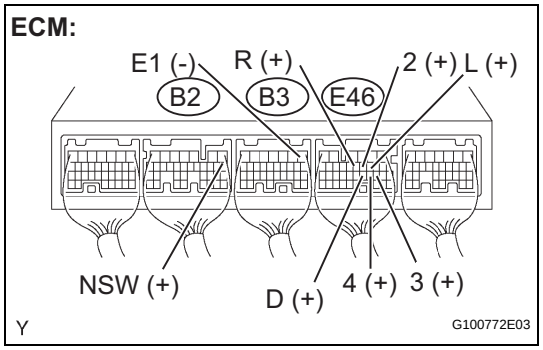

(a) Connect the shift lock control ECU connector.
(b) Turn the ignition switch to the ON position.
(c) Measure the voltage when the shift lever is moved to each position.

Standard voltage

Shift Position	Tester Connection	Specified Condition
P or N	B2-8 (NSW) - B3-1 (E1)	Below 2 V
Except P and N	B2-8 (NSW) - B3-1 (E1)	11 to 14 V
R	E46-11 (R) - B3-1 (E1)	11 to 14 V*
Except R	E46-11 (R) - B3-1 (E1)	Below 1 V
D or 4	E46-21 (D) - B3-1 (E1)	11 to 14 V
Except D and 4	E46-21 (D) - B3-1 (E1)	Below 1 V
4	E46-20 (4) - B3-1 (E1)	11 to 14 V
Except 4	E46-20 (4) - B3-1 (E1)	Below 1 V
3	E46-19 (3) - B3-1 (E1)	11 to 14 V
Except 3	E46-19 (3) - B3-1 (E1)	Below 1 V
2 or L	E46-10 (2) - B3-1 (E1)	11 to 14 V
Except 2 and L	E46-10 (2) - B3-1 (E1)	Below 1 V
L	E46-9 (L) - B3-1 (E1)	11 to 14 V
Except L	E46-9 (L) - B3-1 (E1)	Below 1 V

HINT:
*: The voltage will drop slightly due to illumination of the back up light.

NG → **REPAIR OR REPLACE HARNESS OR CONNECTOR**

AT

OK

REPLACE ECM

DTC	P0710	Transmission Fluid Temperature Sensor "A" Circuit

DTC	P0712	Transmission Fluid Temperature Sensor "A" Circuit Low Input

DTC	P0713	Transmission Fluid Temperature Sensor "A" Circuit High Input

DESCRIPTION

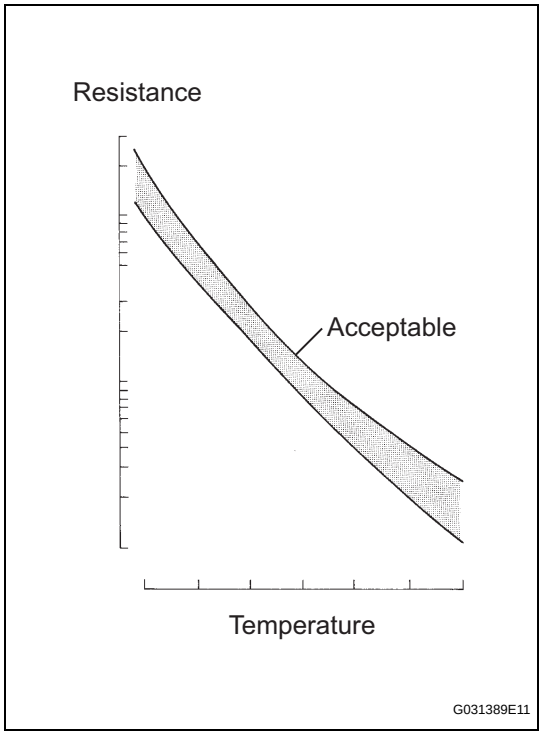

The ATF (Automatic Transmission Fluid) temperature sensor converts the fluid temperature into a resistance value which is input into the ECM.
The ECM applies a voltage to the temperature sensor through ECM terminal THO1.
The sensor resistance changes with the transmission fluid temperature. As the temperature becomes higher, the sensor resistance decreases.
One terminal of the sensor is grounded so that the sensor resistance and the voltage decrease as the temperature becomes higher.
The ECM calculates the fluid temperature based on the voltage signal.

DTC No.	DTC Detection Conditions	Trouble Areas
P0710	(a) and (b) are detected momentarily within 0.5 seconds when neither P0712 nor P0713 is detected. (1-trip detection logic) (a) No. 1 ATF temperature sensor resistance is less than 79 Ω. (b) No. 1 ATF temperature sensor resistance is more than 156 kΩ. HINT: Within 0.5 seconds, the malfunction changes from (a) to (b) or from (b) to (a).	• Open or short in No. 1 ATF temperature sensor circuit • Transmission wire (No. 1 ATF temperature sensor) • ECM

AT

DTC No.	DTC Detection Conditions	Trouble Areas
P0712	No. 1 ATF temperature sensor resistance is less than 79 Ω for 0.5 seconds or more. (1-trip detection logic)	• Short in No. 1 ATF temperature sensor circuit • Transmission wire (No. 1 ATF temperature sensor) • ECM
P0713	No. 1 ATF temperature sensor resistance is more than 156 kΩ for 0.5 seconds or more 15 minutes or more after starting engine. (1-trip detection logic)	• Open in No. 1 ATF temperature sensor circuit • Transmission wire (No. 1 ATF temperature sensor) • ECM

MONITOR DESCRIPTION

These DTCs indicate an open or short in the Automatic Transmission Fluid (ATF) temperature sensor circuit.
The ATF temperature sensor converts ATF temperature to an electrical resistance value. Based on the resistance, the ECM determines the ATF temperature, and detects any open or short malfunctions in the ATF temperature circuit. If the resistance value of the ATF temperature is less than 79 Ω*1 or more than 156 kΩ*2, the ECM interprets this as a fault in the ATF sensor or its wiring. The ECM turns on the MIL and stores a DTC.
*1: 150°C (302°F) or more is indicated regardless of the actual ATF temperature.
*2: -40°C (-40°F) is indicated regardless of the actual ATF temperature.
HINT:
The ATF temperature can be checked on the intelligent tester display.

MONITOR STRATEGY

Related DTCs	P0710: ATF temperature sensor/Range check (Fluttering) P0712: ATF temperature sensor/Range check (Low resistance) P0713: ATF temperature sensor/Range check (High resistance)
Required sensors/Components	ATF temperature sensor
Frequency of operation	Continuous
Duration	0.5 seconds
MIL operation	Immediate
Sequence of operation	None

TYPICAL ENABLING CONDITIONS

AT

P0710: Range check (Fluttering)

The monitor will run whenever the following DTCs are not present.	None
The typical enabling condition is not available.	-

P0712: Range check (Low resistance)

The monitor will run whenever the following DTCs are not present.	None
The typical enabling condition is not available.	-

P0713: Range check (High resistance)

The monitor will run whenever the following DTCs are not present.	None
Time after engine start	15 minutes or more

TYPICAL MALFUNCTION THRESHOLDS

P0710: Range check (Fluttering)

ATF temperature sensor resistance	Less than 79 Ω or More than 156 kΩ

P0712: Range check (Low resistance)

ATF temperature sensor resistance	Less than 79 Ω

P0713: Range check (High resistance)

ATF temperature sensor resistance	More than 156 kΩ

COMPONENT OPERATING RANGE

ATF temperature sensor	Atmospheric temperature up to approximately 130°C (266°F)

WIRING DIAGRAM

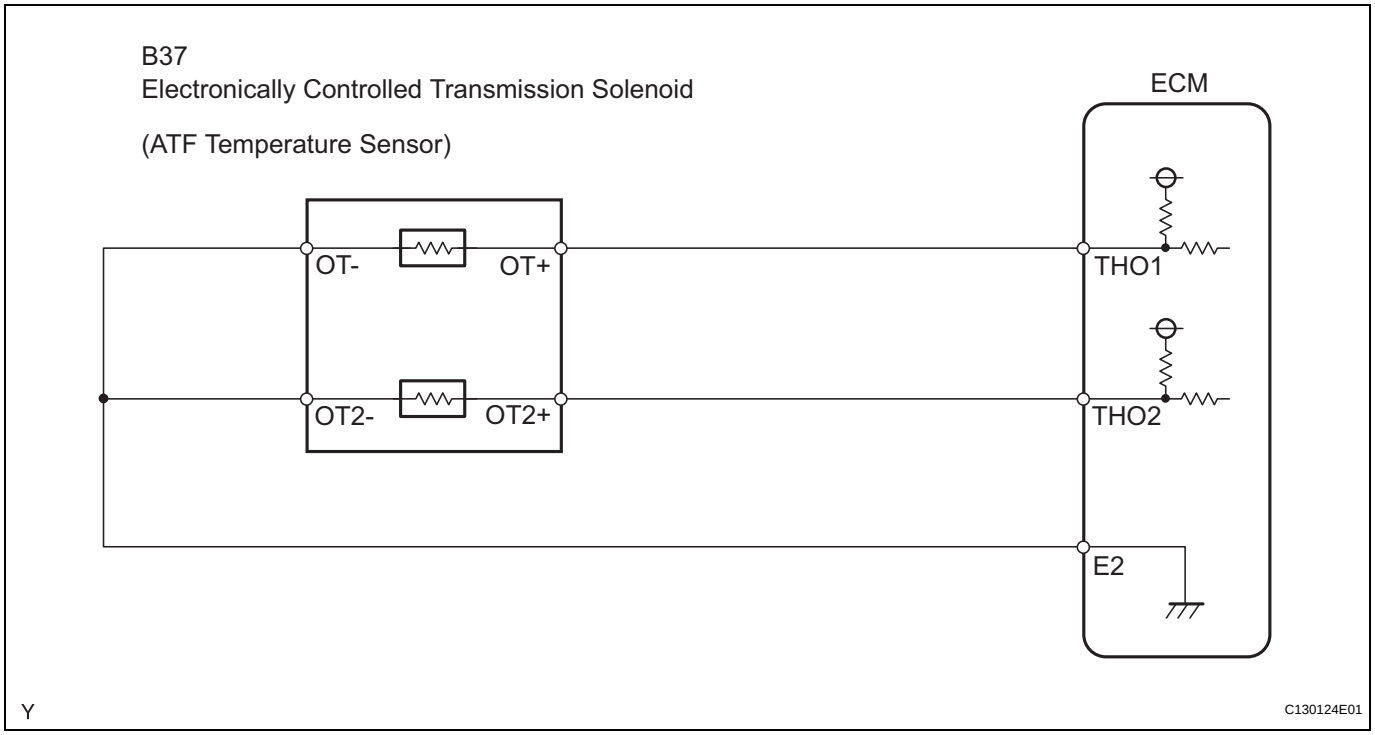

INSPECTION PROCEDURE

HINT:

According to the DATA LIST displayed on the intelligent tester, you can read the values of components, such as the switches, sensors and actuators, without removing any parts. Reading the DATA LIST as a first step of troubleshooting is one method of shortening labor time.

NOTICE:

In the table below, the values listed under "Normal Condition" are for reference only. Do not depend solely on these reference values when judging whether a part is faulty or not.

1. Warm up the engine.
2. Turn the ignition switch off.
3. Connect the intelligent tester together with the CAN VIM (Controller Area Network Vehicle Interface Module) to the DLC3.
4. Turn the ignition switch to the ON position.
5. Push the "ON" button of the tester.
6. Select the items "DIAGNOSIS / ENHANCED OBD II / DATA LIST / A/T".
7. According to the display on the tester, read the "DATA LIST".

Item	Measurement Item/ Range (display)	Normal Condition
AT OIL TEMP1	No. 1 ATF Temperature Sensor Value/ min.: -40°C (-40°F) max.: 215°C (419°F)	• After Stall Test: Approximately 80°C (176°F) • Equal to ambient temperature during cold soak

AT

HINT:
When DTC P0712 is output and intelligent tester reading is 150°C (302°F) or more, there is a short circuit.
When DTC P0713 is output and intelligent tester reading is -40°C (-40°F), there is an open circuit.
Measure the resistance between terminal THO1 and the body ground.

Temperature Displayed	Malfunction
-40°C (-40°F)	Open circuit
150°C (302°F) or more	Short circuit

HINT:
If a circuit related to the ATF temperature sensor becomes open, P0713 is immediately set (in 0.5 seconds). When P0713 is set, P0711 cannot be detected.
It is not necessary to inspect the circuit when P0711 is set.

1 INSPECT TRANSMISSION WIRE (ATF TEMPERATURE SENSOR)

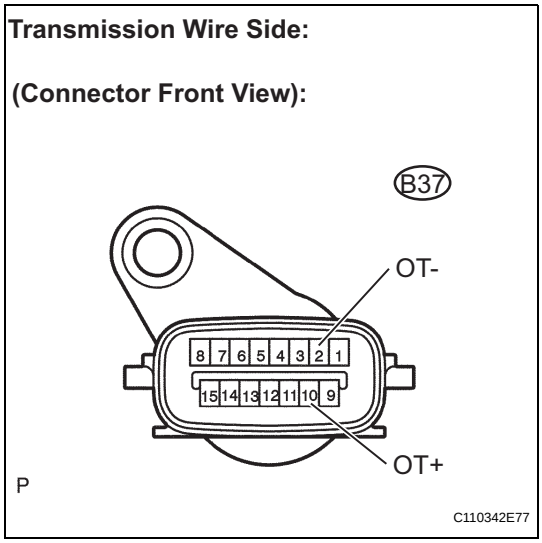

(a) Disconnect the transmission wire connector from the transmission.
(b) Measure the resistance.
Standard resistance

Tester Connection	Specified Condition
2 (OT-) - 10 (OT+)	79 Ω to 156 kΩ

(c) Measure the resistance.
Standard resistance (Check for short)

Tester Connection	Specified Condition
2 (OT-) - Body ground	10 kΩ or higher
10 (OT+) - Body ground	10 kΩ or higher

HINT:
If the resistance is outside the specified range at either of the ATF temperatures shown in the table below, the driveability of the vehicle may decrease.

ATF Temperature	Specified Condition
20°C (68°F)	3 to 5 kΩ
110°C (230°F)	0.22 to 0.28 kΩ

NG → **REPAIR OR REPLACE TRANSMISSION WIRE**

OK

AT

2	CHECK HARNESS AND CONNECTOR (TRANSMISSION WIRE - ECM)

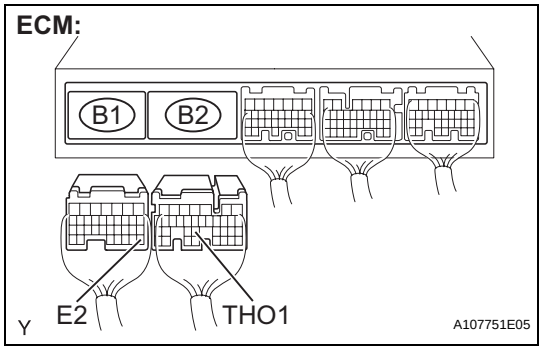

(a) Connect the transmission wire connector to the transmission.
(b) Disconnect the ECM connectors.
(c) Measure the resistance.
Standard resistance

Tester Connection	Specified Condition
B2-24 (THO1) - B1-28 (E2)	79 Ω to 156 kΩ

(d) Measure the resistance.
Standard resistance (Check for short)

Tester Connection	Specified Condition
B2-24 (THO1) - Body ground	10 kΩ or higher
B1-28 (E2) - Body ground	10 kΩ or higher

NG → **REPAIR OR REPLACE HARNESS OR CONNECTOR**

OK

REPLACE ECM

AT

DTC	P0711	Transmission Fluid Temperature Sensor "A" Performance

DESCRIPTION

Refer to DTC P0710 (See page AT-51).

DTC No.	DTC Detection Conditions	Trouble Areas
P0711	Either of the following Condition (A) or (B) is met: Condition (A): All of (a), (b) and (c) are detected (2-trip detection logic): (a) Intake air and engine coolant temperatures are more than -10°C (14°F) at engine start. (b) After normal driving for over 6 minutes and 5.6 miles (9 km) or more, ATF temperature is less than 20°C (68°F). (c) 22 minutes or more have elapsed after engine start. Condition (B): Both (a) and (b) are detected (2-trip detection logic) (a) Engine coolant temperature is less than 35°C (95°F) at engine start. (b) ATF temperature is 110°C (230°F) or more when engine coolant temperature reaches 60°C (140°F).	• Transmission wire (No. 1 ATF temperature sensor) • ECM

MONITOR DESCRIPTION

This DTC indicates that there is a problem with the output from the ATF (Automatic Transmission Fluid) temperature sensor and that the sensor itself is defective. The ATF temperature sensor converts the ATF temperature to an electrical resistance value. Based on the resistance, the ECM determines the ATF temperature and detects any open or short malfunctions in the ATF temperature circuit or a fault of the ATF temperature sensor.

After running the vehicle for a certain period, the ATF temperature should increase. If the ATF temperature is below 20°C (68°F) after running the vehicle for a certain period, the ECM interprets this as a fault, and turns on the MIL.

When the ATF temperature is 110°C (230°F) or more and engine coolant temperature reaches 60°C (140°F) after cold start, the ECM also determines this as a fault, turns on the MIL, and stores the DTC.

AT

MONITOR STRATEGY

Related DTCs	P0711: ATF temperature sensor/Rationality check
Required sensors/Components	ATF temperature sensor
Frequency of operation	Continuous
Duration	Condition (A): 3 seconds Condition (B): 10 seconds
MIL operation	2 driving cycles
Sequence of operation	None

TYPICAL ENABLING CONDITIONS

The following conditions are common to Condition (A) and (B).

The monitor will run whenever the following DTCs are not present.	None
ATF temperature sensor "A" circuit	No circuit malfunction
ECT (Engine Coolant Temperature) sensor circuit	No circuit malfunction
IAT (Intake Air Temperature) sensor circuit	No circuit malfunction

Condition (A)

Time after engine start	21 minutes and 40 seconds or more

Driving distance after engine start	5.6 miles (9 km) or more
Accumulated driving time	5 minutes and 30 seconds or more
ECT	-15°C (5°F) or more
IAT (12 seconds after engine start)	-10°C (14°F) or more
ECT (12 seconds after engine start)	-10°C (14°F) or more

Condition (B)

ECT (Current temperature)	60°C (140°F) or more
ECT (12 seconds after engine start)	Less than 35°C (95°F)
ATF temperature (12 seconds after engine start)	110°C (230°F) or more

TYPICAL MALFUNCTION THRESHOLDS

Either of the following conditions is met: Condition (A) or (B)

Condition (A)

ATF temperature	Less than 20°C (68°F) (Conditions vary with ATF temperature at engine start)

Condition (B)

ATF temperature	110°C (230°F) or more

WIRING DIAGRAM

Refer to DTC P0710 (See page AT-53).

INSPECTION PROCEDURE

HINT:

According to the DATA LIST displayed on the intelligent tester, you can read the values of components, such as the switches, sensors and actuators, without removing any parts. Reading the DATA LIST as a first step of troubleshooting is one method of shortening labor time.

NOTICE:

In the table below, the values listed under "Normal Condition" are for reference only. Do not depend solely on these reference values when judging whether a part is faulty or not.

1. Warm up the engine.
2. Turn the ignition switch off.
3. Connect the intelligent tester together with the CAN VIM (Controller Area Network Vehicle Interface Module) to the DLC3.
4. Turn the ignition switch to the ON position.
5. Push the "ON" button of the tester.
6. Select the items "DIAGNOSIS / ENHANCED OBD II / DATA LIST / A/T".
7. According to the display on the tester, read the "DATA LIST".

Item	Measurement Item/ Range (display)	Normal Condition
AT OIL TEMP1	No. 1 ATF Temperature Sensor Value/ min.: -40°C (-40°F) max.: 215°C (419°F)	• After Stall Test: Approximately 80°C (176°F) • Equal to ambient temperature during cold soak

HINT:

When DTC P0712 is output and intelligent tester reading is 150°C (302°F) or more, there is a short circuit.

When DTC P0713 is output and intelligent tester reading is -40°C (-40°F), there is an open circuit.

Measure the resistance between terminal THO1 and the body ground.

Temperature Displayed	Malfunction
-40°C (-40°F)	Open circuit
150°C (302°F) or more	Short circuit

AT

HINT:
If a circuit related to the ATF temperature sensor becomes open, P0713 is immediately set (in 0.5 seconds). When P0713 is set, P0711 cannot be detected.
It is not necessary to inspect the circuit when P0711 is set.

1	CHECK ANY OTHER DTCS OUTPUT (IN ADDITION TO DTC P0711)

(a) Connect the intelligent tester to the DLC3.
(b) Turn the ignition switch to the ON position and push the intelligent tester main switch ON.
(c) Select the items "DIAGNOSIS / ENHANCED OBD II / DTC INFO / CURRENT CODES".
(d) Read the DTCs using the intelligent tester.

Result:

Display (DTC Output)	Proceed to
Only "P0711" is output	A
"P0711" and other DTCs	B

HINT:
If any codes besides "P0711" are output, perform troubleshooting for those DTCs first.

B → **GO TO DTC CHART**

A

2	CHECK TRANSMISSION FLUID LEVEL

OK:
Automatic transmission fluid level is correct.

NG → **ADD FLUID**

OK

REPLACE TRANSMISSION WIRE (ATF TEMPERATURE SENSOR)

AT

DTC	P0717	Input Speed Sensor Circuit No Signal

DESCRIPTION

This sensor detects the rotation speed of the turbine which shows the input revolution of the transmission. By comparing the input turbine speed signal (NT) with the counter gear speed sensor signal (SP2), the ECM detects the shift timing of the gears and appropriately controls the engine torque and hydraulic pressure according to various conditions, providing smooth gear shifts.

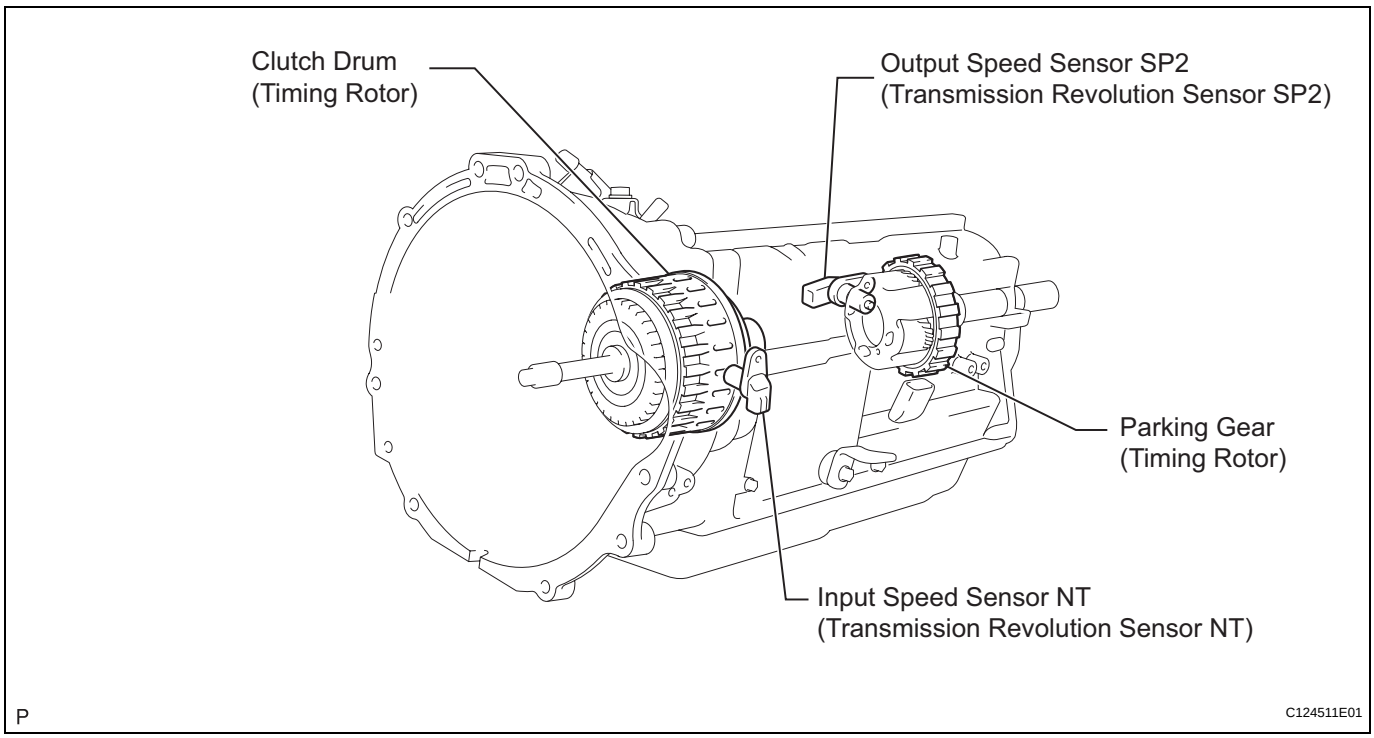

DTC No.	DTC Detection Conditions	Trouble Areas
P0717	All conditions below are detected for 5 seconds or more. (1-trip detection logic) (a) Gear change is not being performed. (b) Gear position: 4th or 5th (c) T/M input shaft rpm: 300 rpm or less (d) T/M output shaft rpm: 1,000 rpm or more (e) Park/neutral position switch (NSW, R and L) is OFF (f) Shift solenoid valves, park/neutral position switch and vehicle speed sensor are in normal operation.	• Open or short in speed sensor (NT) circuit • Speed sensor (NT) • ECM

AT

Reference (Using an oscilloscope):

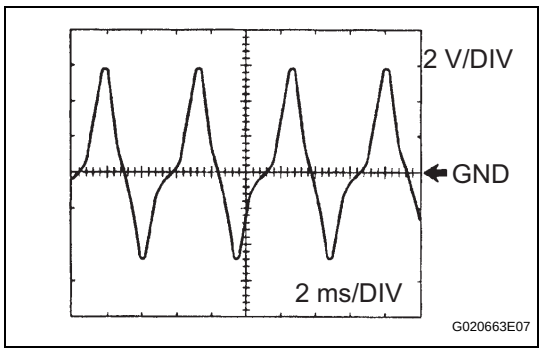

Check the waveform between terminals NT+ and NT- of the ECM connector.

Standard:

Refer to the illustration.

Item	Condition
Terminal	NT+ - NT-
Tool setting	2 V/DIV, 2 ms/DIV
Vehicle condition	Engine idling speed (P or N position)

MONITOR DESCRIPTION

This DTC indicates that a pulse is not output from the speed sensor NT (Turbine (input) speed sensor) or is weak. The NT terminal of the ECM detects the revolution signal from the speed sensor (NT) (input RPM). The ECM outputs a gearshift signal comparing the input speed sensor (NT) with the output speed sensor (SP2). While the vehicle is operating in the 4th or 5th gear position in the shift position of D, if the input shaft revolution is less than 300 rpm*1 although the output shaft revolution is more than 1,000 rpm or more*2, the ECM detects the trouble, illuminates the MIL and stores the DTC.
*1: Pulse is not output or is irregularly output.
*2: The vehicle speed is approximately 31 mph (50 km/h) or more.

MONITOR STRATEGY

Related DTCs	P0717: Speed sensor (NT)/Verify pulse input
Required sensors/Components (Main)	Speed sensor (NT)
Required sensors/Components (Related)	Speed sensor (SP2)
Frequency of operation	Continuous
Duration	5 seconds
MIL operation	Immediate
Sequence of operation	None

TYPICAL ENABLING CONDITIONS

The monitor will run whenever the following DTCs are not present.	P0500: VSS P0748 - P0799: Trans solenoid (range)
Shift change	Each shift change is completed before starting next shift change operation
ECM selected gear	4th or 5th
Output shaft rpm	1,000 rpm or more
Park/neutral position switch	OFF
R switch	OFF
L switch	OFF
Engine	Running
Ignition Switch	ON
Starter	OFF

AT

TYPICAL MALFUNCTION THRESHOLDS

Sensor signal rpm	Less than 300 rpm

COMPONENT OPERATING RANGE

Speed sensor (NT)	Input speed is equal to engine speed when lock-up ON

WIRING DIAGRAM

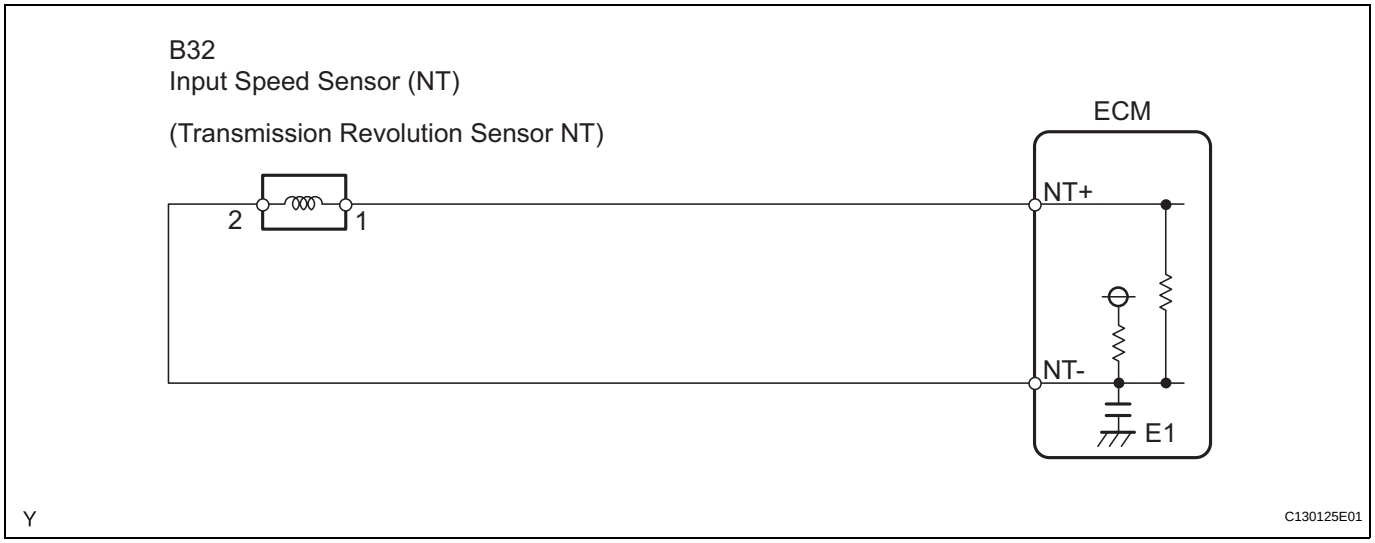

INSPECTION PROCEDURE

HINT:
According to the DATA LIST displayed on the intelligent tester, you can read the values of components, such as the switches, sensors and actuators, without removing any parts. Reading the DATA LIST as a first step of troubleshooting is one method of shortening labor time.

1. Warm up the engine.
2. Turn the ignition switch off.
3. Connect the intelligent tester together with the CAN VIM (Controller Area Network Vehicle Interface Module) to the DLC3.
4. Turn the ignition switch to the ON position.
5. Push the "ON" button of the tester.
6. Select the items "DIAGNOSIS / ENHANCED OBD II / DATA LIST / A/T".
7. According to the display on the tester, read the "DATA LIST".

Item	Measurement Item/ Range (display)	Normal Condition
SPD (NT)	Input Turbine Speed/ display: 50 rpm	[HINT] • Lock-up ON (After warming up the engine); Input turbine speed (NT) equal to the engine speed. • Lock-up OFF (Idling at N position); Input turbine speed (NT) nearly equal to the engine speed.

AT

HINT:

- SPD (NT) is always 0 while driving:
  Open or short in the sensor or circuit.
- SPD (NT) is always less than 300 rpm while driving the vehicle at 31 mph (50 km/h) or more:
  Sensor trouble, improper installation, or intermittent connection trouble of the circuit.

1 INSPECT SPEED SENSOR (NT) INSTALLATION

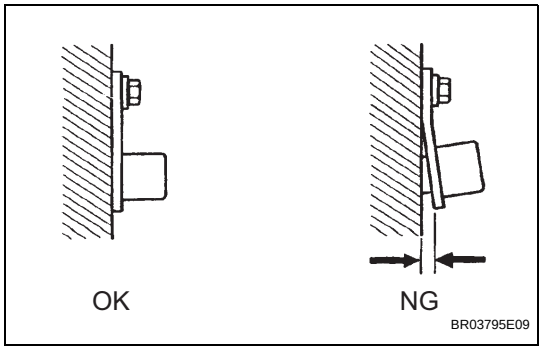

(a) Check the speed sensor (NT) installation.
OK:
The installation bolt is tightened properly and there is no clearance between the sensor and transmission case.

NG → **SECURELY INSTALL OR REPLACE SPEED SENSOR (NT)**

OK

2 INSPECT SPEED SENSOR (NT)

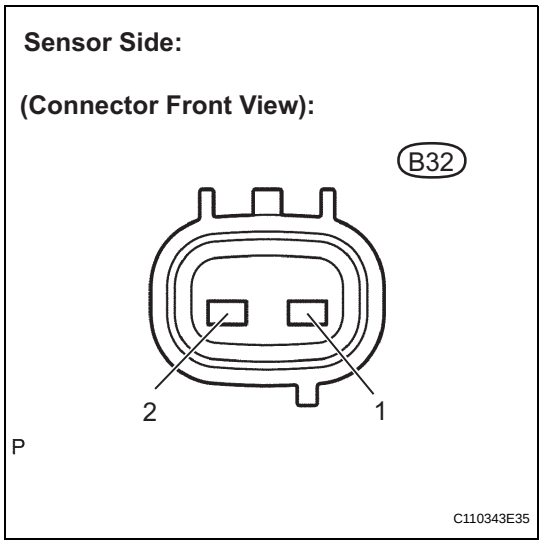

(a) Disconnect the speed sensor (NT) connector from the transmission.
(b) Measure the resistance.
Standard resistance

Tester Connection	Specified Condition
1 - 2	560 to 680 Ωat 20°C (68°F)

NG → **REPLACE SPEED SENSOR (NT)**

OK

3 CHECK HARNESS AND CONNECTOR (SPEED SENSOR (NT) - ECM)

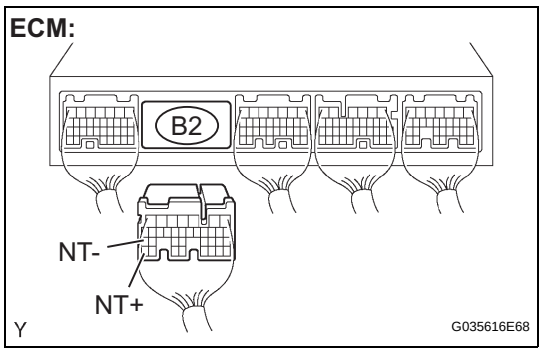

(a) Connect the speed sensor (NT) connector.
(b) Disconnect the ECM connector.
(c) Measure the resistance.
Standard resistance

Tester Connection	Specified Condition
B2-35 (NT+) - B2-27 (NT-)	560 to 680 Ω at 20°C (68°F)

(d) Measure the resistance.
Standard resistance (Check for short)

Tester Connection	Specified Condition
B2-35 (NT+) - Body ground	10 kΩ or higher
B2-27 (NT-) - Body ground	10 kΩ or higher

AT

NG → REPAIR OR REPLACE HARNESS OR CONNECTOR

OK

REPLACE ECM

DTC	P0722	Output Speed Sensor Circuit No Signal

DESCRIPTION

The speed sensor SP2 detects the rotation speed of the transmission output shaft and sends signals to the ECM. The ECM determines the vehicle speed based on these signals. An AC voltage is generated in the speed sensor SP2 coil as the parking gear mounted on the rear planetary gear assembly rotates, and this voltage is sent to the ECM. The parking gear on the rear planetary gear is used as the timing rotor for this sensor. The gear shift point and lock-up timing are controlled by the ECM based on the signals from the vehicle speed sensor and the throttle position sensor.

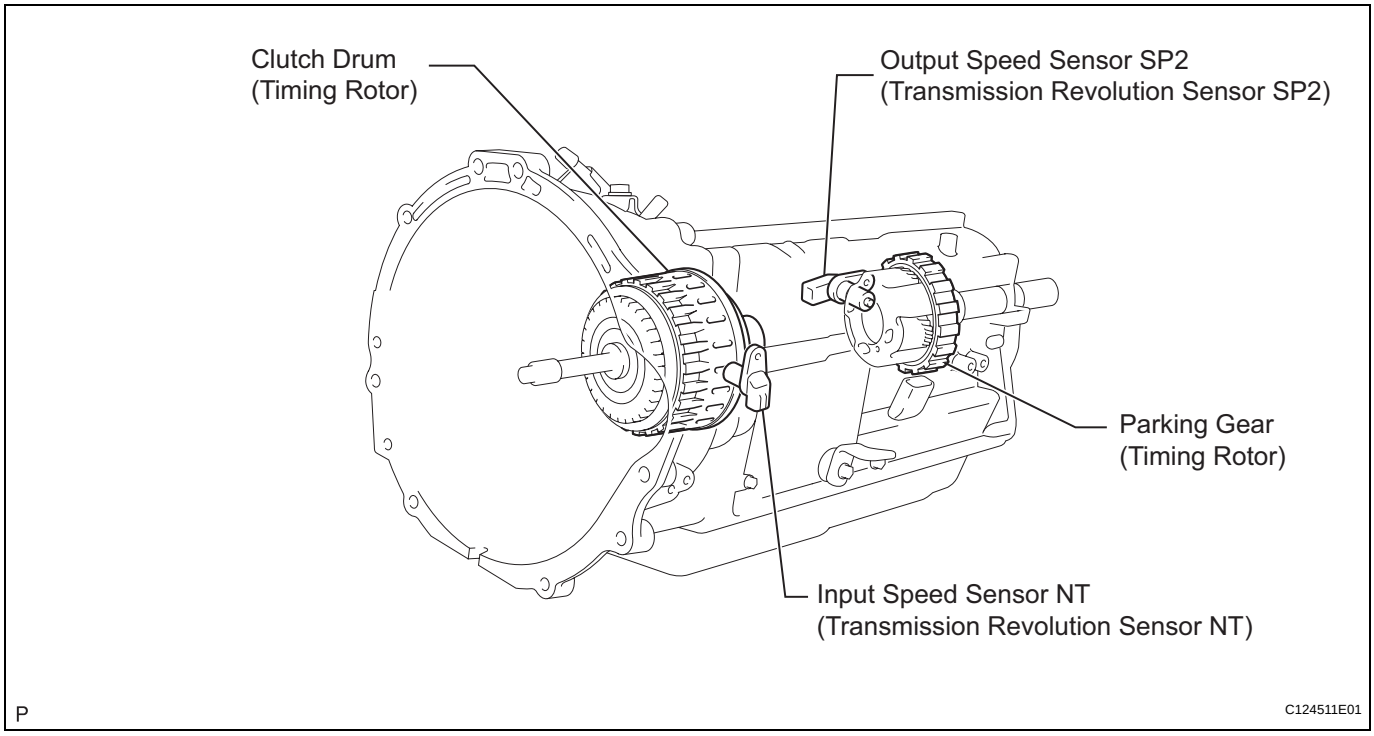

DTC No.	DTC Detection Conditions	Trouble Areas
P0722	All conditions below are detected 500 times or more continuously. (1-trip detection logic) (a) No signal from speed sensor (SP2) is input to ECM while 4 pulses of No. 1 vehicle speed sensor signal are sent. (b) Vehicle speed is 5.6 mph (9 km/h) or more for at least 4 seconds. (c) Park/neutral position switch is OFF. (d) Transfer is in any position other than neutral position.	• Open or short in speed sensor (SP2) circuit • Speed sensor (SP2) • ECM

AT

Reference (Using an oscilloscope):

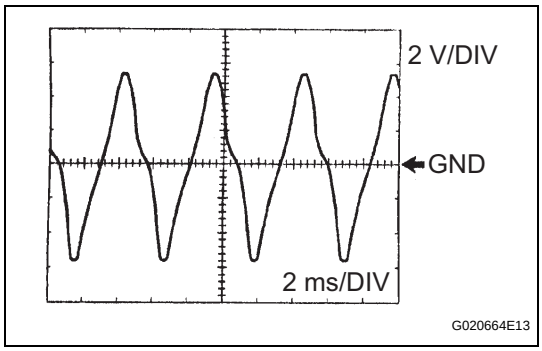

Check the waveform between terminals SP2+ and SP2- of the ECM connector.

Standard:
Refer to the illustration.

Item	Condition
Terminal	SP2+ - SP2-
Tool setting	2 V/DIV, 2 ms/DIV
Vehicle condition	Vehicle speed 12 mph (20 km/h)

MONITOR DESCRIPTION

The output speed sensor monitors the output shaft speed. The ECM controls the gearshift point and the lock up timing based on the signals from the output speed sensor and throttle position sensor.
If the ECM detects no signal from the output shaft speed sensor even while the vehicle is moving, it will conclude that is a malfunction in the output speed sensor. The ECM will illuminate the MIL and set the DTC.

MONITOR STRATEGY

Related DTCs	P0722: Speed sensor SP2/Verify pulse input
Required sensors/Components	Speed sensor SP2
Frequency of operation	Continuous
Duration	500 output shaft revolutions
MIL operation	Immediate
Sequence of operation	None

TYPICAL ENABLING CONDITIONS

The monitor will run whenever the following DTCs are not present.	P0500: VSS P0748 - P0799: Trans solenoid (range)
Vehicle speed sensor pulse input	4 times
Vehicle speed range (4 seconds or more)	5.6 mph (9 km/h) or more
Park/neutral position switch	OFF
Transfer neutral switch	OFF
Battery voltage	8 V or more
Ignition switch	ON
Starter	OFF

AT

TYPICAL MALFUNCTION THRESHOLDS

Output speed sensor pulse input	No input

WIRING DIAGRAM

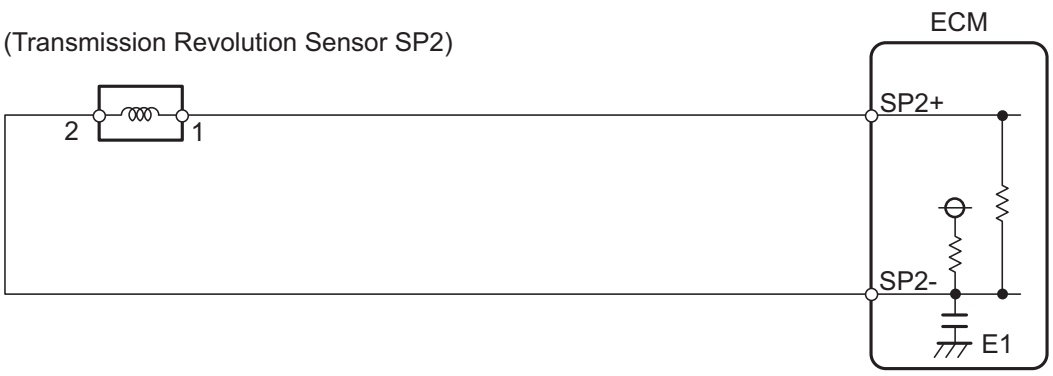

INSPECTION PROCEDURE

HINT:
According to the DATA LIST displayed on the intelligent tester, you can read the values of components, such as the switches, sensors and actuators, without removing any parts. Reading the DATA LIST as a first step of troubleshooting is one method of shortening labor time.

NOTICE:

In the table below, the values listed under "Normal Condition" are for reference only. Do not depend solely on these reference values when judging whether a part is faulty or not.

1. Connect the intelligent tester together with the CAN VIM (Controller Area Network Vehicle Interface Module) to the DLC3.
2. Turn the ignition switch to the ON position.
3. Push the "ON" button of the tester.
4. Select the items "DIAGNOSIS / ENHANCED OBD II / DATA LIST / A/T".
5. According to the display on the tester, read the "DATA LIST".

AT

Item	Measurement Item/ Range (display)	Normal Condition
SPD (SP2)	Counter Gear Speed display/ min.: 0 mph (0 km/h) max.: 158 mph (255 km/h)	Vehicle stopped: 0 mph (0 km/h) [HINT] Equal to vehicle speed

HINT:

- SPD (SP2) is always 0 while driving:
  Open or short in the sensor or circuit.
- The SPD (SP2) value displayed on the tester is much lower than the actual vehicle speed:
  Sensor trouble, improper installation, or intermittent connection trouble of the circuit.

1 INSPECT SPEED SENSOR (SP2) INSTALLATION

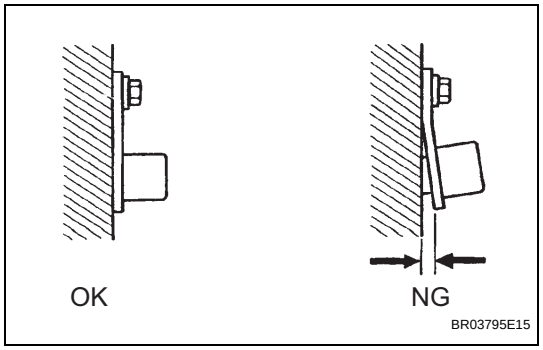

(a) Check the speed sensor (SP2) installation.
OK:
The installation bolt is tightened properly and there is no clearance between the sensor and transmission case.

NG → **SECURELY INSTALL OR REPLACE SPEED SENSOR (SP2)**

OK

2 INSPECT SPEED SENSOR (SP2)

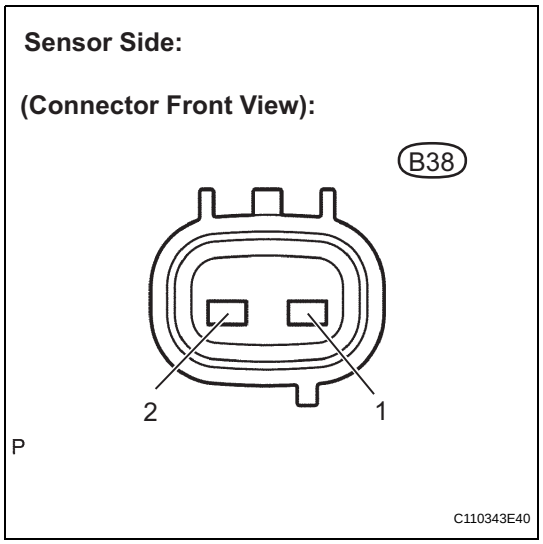

(a) Disconnect the speed sensor (SP2) connector from the transmission.
(b) Measure the resistance.
Standard resistance

Tester Connection	Specified Condition
1 - 2	560 to 680 Ω at 20°C (68°F)

NG → **REPLACE SPEED SENSOR (SP2)**

OK

3 CHECK HARNESS AND CONNECTOR (SPEED SENSOR (SP2) - ECM)

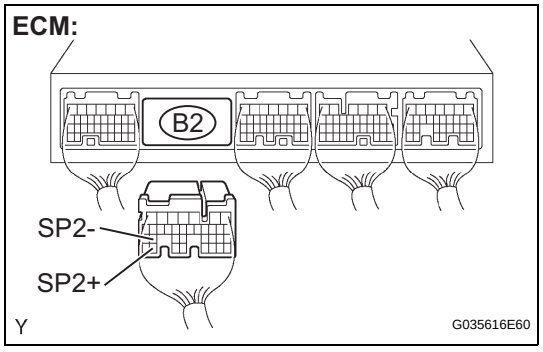

(a) Connect the speed sensor connector.
(b) Disconnect the ECM connector.
(c) Measure the resistance.
Standard resistance

Tester Connection	Specified Condition
B2-34 (SP2+) - B2-26 (SP2-)	560 to 680 Ω at 20°C (68°F)

(d) Measure the resistance.
Standard resistance (Check for short)

Tester Connection	Specified Condition
B2-34 (SP2+) - Body ground	10 kΩ or higher
B2-26 (SP2-) - Body ground	10 kΩ or higher

AT

NG → **REPAIR OR REPLACE HARNESS OR CONNECTOR**

OK

REPLACE ECM

DTC	P0748	Pressure Control Solenoid "A" Electrical (Shift Solenoid Valve SL1)

DESCRIPTION

Shifting from 1st to 5th is performed in combination with the ON and OFF operations of the shift solenoid valves S1, S2, SR, SL1 and SL2 which are controlled by the ECM. If an open or short circuit occurs in any of the shift solenoid valves, the ECM controls the remaining normal shift solenoid valves to allow the vehicle to be driven smoothly (See page AT-35).

DTC No.	DTC Detection Conditions	Trouble Areas
P0748	The ECM checks for an open or short in the shift solenoid valve SL1 circuit. (1-trip detection logic) • Output signal duty equals to 100 %. (NOTE: SL1 output signal duty is less than 100 % under normal condition.)	• Open or short in shift solenoid valve SL1 circuit • Shift solenoid valve SL1 • ECM

MONITOR DESCRIPTION

This DTC indicates an open or short in the shift solenoid valve SL1 circuit. The ECM controls the gearshift by turning the shift solenoid valves "ON/OFF". When there is an open or short circuit in any shift solenoid valve circuit, the ECM detects the problem, illuminates the MIL and stores the DTC. And the ECM performs the fail-safe function and turns the other functioning shift solenoid valves "ON/OFF". (If an open or short circuit is detected, the ECM cuts the current to the circuit.)
If the ECM detects an open or short in the shift solenoid valve SL1 circuit, the ECM determines that there is a malfunction (See page AT-35).

MONITOR STRATEGY

Related DTCs	P0748 : Shift solenoid valve SL1/Range check
Required sensors/Components	Shift solenoid valve SL1
Frequency of operation	Continuous
Duration	1 second
MIL operation	Immediate
Sequence of operation	None

AT

TYPICAL ENABLING CONDITIONS

The monitor will run whenever the following DTCs are not present.	None
Battery voltage	10 V or more
CPU commanded duty	Less than 75 %
Ignition switch	ON
Starter	OFF

TYPICAL MALFUNCTION THRESHOLDS

Output signal duty	100 %

COMPONENT OPERATING RANGE

Output signal duty	Less than 100 %

WIRING DIAGRAM

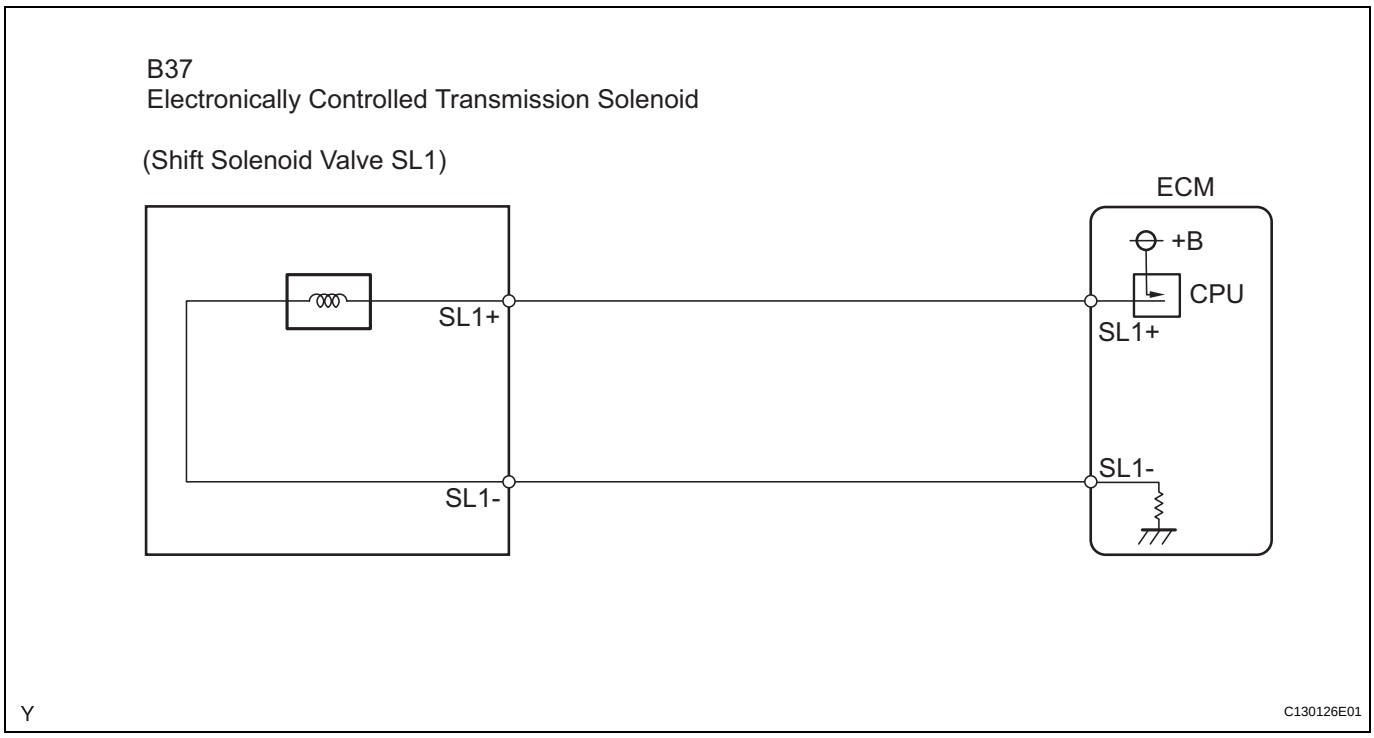

INSPECTION PROCEDURE

HINT:

The shift solenoid valve SL1 is turned on/off normally when the shift lever is in the D position:

Gearshift controlled by ECM	1st	2nd	3rd	4th	5th
Shift solenoid valve SL1	OFF	OFF	OFF	OFF	ON

1 INSPECT TRANSMISSION WIRE (SL1)

AT

Transmission Wire Side:

(Connector Front View):

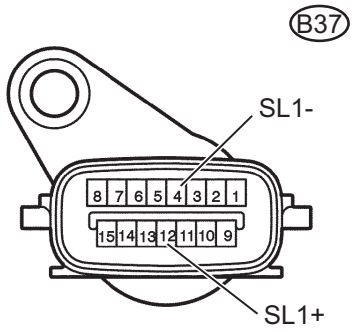

(a) Disconnect the transmission wire connector from the transmission.

(b) Measure the resistance.

Standard resistance

Tester Connection	Specified Condition
12 (SL1+) - 4 (SL1-)	5.0 to 5.6 Ωat 20°C (68°F)

(c) Measure the resistance.

Standard resistance (Check for short)

Tester Connection	Specified Condition
12 (SL1+) - Body ground	10 kΩ or higher
4 (SL1-) - Body ground	10 kΩ or higher

NG → **Go to step 3**

OK

2 CHECK HARNESS AND CONNECTOR (TRANSMISSION WIRE - ECM)

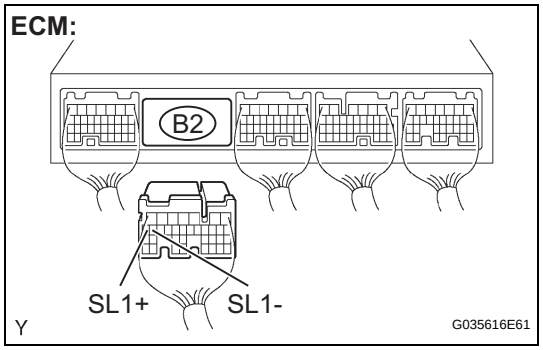

(a) Connect the transmission connector to the transmission.
(b) Disconnect the connector from the ECM.
(c) Measure the resistance.
Standard resistance

Tester Connection	Specified Condition
B2-19 (SL1+) - B2-18 (SL1-)	5.0 to 5.6 Ω at 20°C (68°F)

(d) Measure the resistance.
Standard resistance (Check for short)

Tester Connection	Specified Condition
B2-19 (SL1+) - Body ground	10 kΩ or higher
B2-18 (SL1-) - Body ground	10 kΩ or higher

NG → **REPAIR OR REPLACE HARNESS OR CONNECTOR**

OK

REPLACE ECM

3 INSPECT SHIFT SOLENOID VALVE SL1

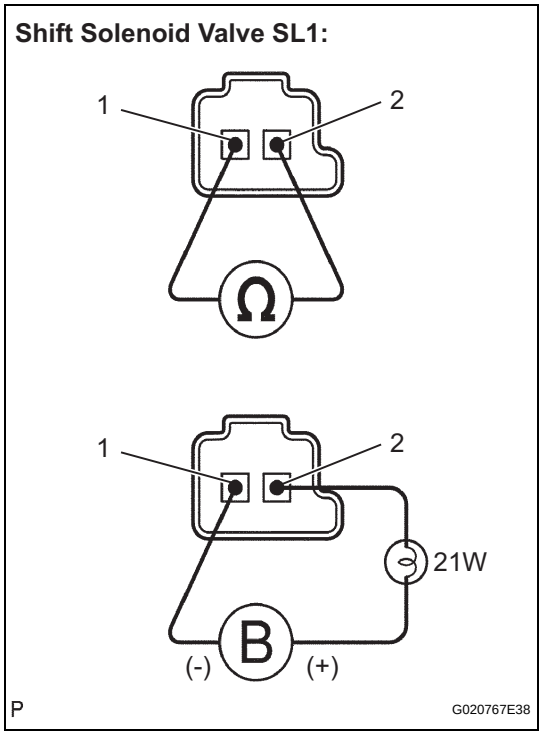

(a) Remove the shift solenoid valve SL1.
(b) Measure the resistance.
Standard resistance

Tester Connection	Specified Condition
1 - 2	5.0 to 5.6 Ω at 20°C (68°F)

(c) Connect the positive (+) lead with a 21 W bulb to terminal 2 and the negative (-) lead to terminal 1 of the solenoid valve connector, then check the movement of the valve.
OK:
The solenoid makes operating sounds.

NG → **REPLACE SHIFT SOLENOID VALVE SL1**

OK

REPAIR OR REPLACE TRANSMISSION WIRE

AT

DTC	P0751	Shift Solenoid "A" Performance (Shift Solenoid Valve S1)

DESCRIPTION

The ECM uses signals from the output shaft speed sensor and input speed sensor to detect the actual gear position (1st, 2nd, 3rd, 4th or 5th gear).
Then the ECM compares the actual gear with the shift schedule in the ECM memory to detect mechanical problems of the shift solenoid valves, valve body or automatic transmission (clutch, brake or gear, etc.).

DTC No.	DTC Detection Conditions	Trouble Areas
P0751	S1 stuck ON malfunction*1: The ECM determines that there is a malfunction when the following conditions are met (2-trip detection logic): (a) When the ECM directs the gearshift to switch to 4th gear, the actual gear is shifted to 1st. (b) When the ECM directs the gearshift to switch to 1st gear, the actual gear is also shifted to 1st.	• Shift solenoid valve S1 remains open • Shift solenoid valve SLT remains open or closed • Valve body is blocked • Automatic transmission (clutch, brake or gear, etc.)
	S1 stuck OFF malfunction*2: The ECM determines that there is a malfunction when the following conditions are met (2-trip detection logic): (a) When the ECM directs the gearshift to switch to 1st gear, the actual gear is shifted to 4th. (b) When the ECM directs the gearshift to switch to 5th gear, the actual gear is also shifted to 5th.	• Shift solenoid valve S1 remains closed • Shift solenoid valve SLT remains open or closed • Valve body is blocked • Automatic transmission (clutch, brake or gear, etc.)

HINT:
Gear positions in the event of a solenoid valve mechanical problem:

Gearshift controlled by ECM	1st	2nd	3rd	4th	5th
*1: Actual gear position under S1 stuck ON malfunction	1st	2nd	2nd	1st	N*
*2: Actual gear position under S1 stuck OFF malfunction	4th	3rd	3rd	4th	5th

N*: Neutral

MONITOR DESCRIPTION

This DTC indicates "stuck ON malfunction" or "stuck OFF malfunction" of the shift solenoid valve S1. The ECM controls the gearshifts by turning the shift solenoid valves "ON/OFF". When the gear position directed by the ECM and the actual gear position do not match, the ECM illuminates the MIL and stores the DTC.

AT

MONITOR STRATEGY

Related DTCs	P0751: Shift solenoid valve S1/OFF malfunction Shift solenoid valve S1/ON malfunction
Required sensors/Components (Main)	Shift solenoid valve S1
Required sensors/Components (Related)	Vehicle speed sensor, Throttle position sensor, Speed sensor (NT), Speed sensor (SP2)
Frequency of operation	Continuous
Duration	OFF malfunctions (A) and (B): 0.4 seconds OFF malfunction (C): Immediate ON malfunctions (A), (B) and (C): 0.4 seconds ON malfunction (D): 3 seconds ON malfunction (E): 0.5 seconds
MIL operation	2 driving cycles

Sequence of operation	None

TYPICAL ENABLING CONDITIONS

The following conditions are common to all OFF malfunctions (A), (B) and (C) and ON malfunctions (A), (B), (C), (D) and (E).

The monitor will run whenever the following DTCs are not present.	P0115 - P0118: ECT sensor P0125: Insufficient ECT for Closed Loop P0500: VSS P0748 - P0799: Trans solenoid (range)
Turbine speed sensor (NT) circuit	No circuit malfunction
Output speed sensor (SP2) circuit	No circuit malfunction
Shift solenoid "A" (S1) circuit	No circuit malfunction
Shift solenoid "B" (S2) circuit	No circuit malfunction
Shift solenoid "E" (SR) circuit	No circuit malfunction
Pressure control solenoid "A" (SL1) circuit	No circuit malfunction
Pressure control solenoid "B" (SL2) circuit	No circuit malfunction
ECT (Engine Coolant Temperature) sensor circuit	No circuit malfunction
Knock sensor circuit	No circuit malfunction
ETCS (Electronic Throttle Control System)	System not down
Transmission shift position	"D"
ECT	40°C (104°F) or more
Spark advance from max. retard timing by knock sensor control	0° CA or more
Engine	Starting
Transfer range	"High" *1

*1: Following conditions are met

Vehicle speed sensor "A" circuit	No circuit malfunction
Output speed sensor circuit	No circuit malfunction
Transfer output speed	143 rpm or more
Transfer input speed/Transfer output speed	0.9 to 1.1

OFF malfunction (A)

ECM selected gear	1st
Vehicle speed	1.2 to 24.9 mph (2 to 40 km/h)
Throttle valve opening angle	8 % or more and 6.5 % or more at engine speed of 2,000 rpm (Conditions vary with engine speed)

OFF malfunction (B)

Current ECM selected gear	5th
Last ECM selected gear	4th
Continuous time of ECM selecting 4th gear	2 seconds or more
Actual gear when ECM selected 4th gear	4th

OFF malfunction (C)

Current ECM selected gear	5th
Last ECM selected gear	4th

ON malfunction (A)

ECM selected gear	1st
Vehicle speed	1.2 to 24.9 mph (2 to 40 km/h)
Throttle valve opening angle	6.5 % or more at engine speed of 2,000 rpm (Conditions vary with engine speed)

ON malfunction (B)

ECM selected gear	4th
Vehicle speed	1.2 mph (2 km/h) or more
Throttle valve opening angle	6.5 % or more at engine speed of 2,000 rpm (Conditions vary with engine speed)

ON malfunction (C)

ECM selected gear	3rd
Vehicle speed	1.2 mph (2 km/h) or more
Throttle valve opening angle	6.5 % or more at engine speed of 2,000 rpm (Conditions vary with engine speed)

ON malfunction (D)

Current ECM selected gear	5th
Last ECM selected gear	4th
Vehicle speed (During transition from 4th to 5th gear)	Less than 62.2 mph (100 km/h)

ON malfunction (E)

ECM selected gear	5th
Engine speed - Turbine speed (NE - NT) (After transition from 4th to 5th gear)	150 rpm or less
Vehicle speed (After transition from 4th to 5th gear)	Less than 62.2 mph (100 km/h)

TYPICAL MALFUNCTION THRESHOLDS

[OFF malfunction]
All of the following conditions are met: OFF malfunctions (A), (B) and (C)
2 detections are necessary in 1 driving cycle.
1st detection; temporary flag ON
2nd detection; pending fault code ON

OFF malfunction (A)

Turbine speed/Output speed	0.93 to 1.07 (Actual gear is 4th)

AT

OFF malfunction (B)

Turbine speed/Output speed	0.65 to 0.79 (Actual gear is 5th)

OFF malfunction (C)

Output record from ECM for 4th → 5th upshifting	Recorded

[ON malfunction]
Either of the following conditions is met:

- ON malfunctions (A) and (B)
- ON malfunction (B) or (C) and ON malfunction (D) or (E)

ON malfunction (A)

Turbine speed/Output speed	3.30 to 7.50 (Actual gear is 1st)

ON malfunction (B)

Turbine speed/Output speed	3.30 to 7.50 (Actual gear is 1st)

ON malfunction (C)

Turbine speed/Output speed	1.91 to 2.35 (Actual gear is 2nd)

ON malfunction (D)

Turbine speed - Output speed x 4th gear ratio	1,000 rpm or more

ON malfunction (E)

Turbine speed - Output speed x 5th gear ratio	1,000 rpm or more

INSPECTION PROCEDURE

HINT:
Performing the ACTIVE TEST using the intelligent tester allows components, such as the relay, VSV, and actuator, to be operated without removing any parts. Performing the ACTIVE TEST as a first step of troubleshooting is one method of shortening labor time.
It is possible to display the DATA LIST during the ACTIVE TEST.

1. Warm up the engine.
2. Turn the ignition switch off.
3. Connect the intelligent tester together with the CAN VIM (Controller Area Network Vehicle Interface Module) to the DLC3.
4. Turn the ignition switch to the ON position.
5. Push the "ON" button of the tester.
6. Clear the DTC.
7. Select the items "DIAGNOSIS / ENHANCED OBD II / ACTIVE TEST / SHIFT".
8. According to the display on the tester, perform the "ACTIVE TEST".

HINT:
While driving, the shift position can be changed with the intelligent tester.
Comparing the shift position directed by the ACTIVE TEST with the actual shift position enables the problem to be confirmed (See page AT-35).

Item	Test Details	Diagnostic Note
SHIFT	[Test Details] Operate the shift solenoid valve and set each shift position manually. [Vehicle Condition] Vehicle Speed: Less than 30 mph (50 km/h) [Others] • Press → button: Shift up • Press ← button: Shift down	Possible to check the operation of the shift solenoid valves. HINT: Shifting to the 5th gear is possible only when the vehicle is stationary with the engine idling.

AT

HINT:

- This test can be conducted when the vehicle speed is 30 mph (50 km/h) or less.
- The 4th to 5th up-shifting must be performed with the accelerator pedal released.
- The 5th to 4th down-shifting must be performed with the accelerator pedal released.
- Do not operate the accelerator pedal for at least 2 seconds after shifting and do not shift successively.
- The shift position directed by the ECM is shown in the DATA LIST / SHIFT display on the intelligent tester.
- The shift solenoid valve S1 is turned on/off normally when the shift lever is in the D position:

Gearshift controlled by ECM	1st	2nd	3rd	4th	5th
Shift solenoid valve S1	ON	ON	OFF	OFF	OFF

1	CHECK ANY OTHER DTCS OUTPUT (IN ADDITION TO DTC P0751)

(a) Connect the the intelligent tester to the DLC3.
(b) Turn the ignition switch to the ON position and push the intelligent tester main switch ON.
(c) Select the items "DIAGNOSIS / ENHANCED OBD II / DTC INFO / CURRENT CODES".

(d) Read the DTCs using the intelligent tester.

Result:

Display (DTC Output)	Proceed to
Only "P0751" is output	A
"P0751" and other DTCs	B

HINT:
If any codes besides "P0751" are output, perform troubleshooting for those DTCs first.

B → **GO TO DTC CHART**

A

2 PERFORM ACTIVE TEST USING INTELLIGENT TESTER (SOLENOID (SLT))

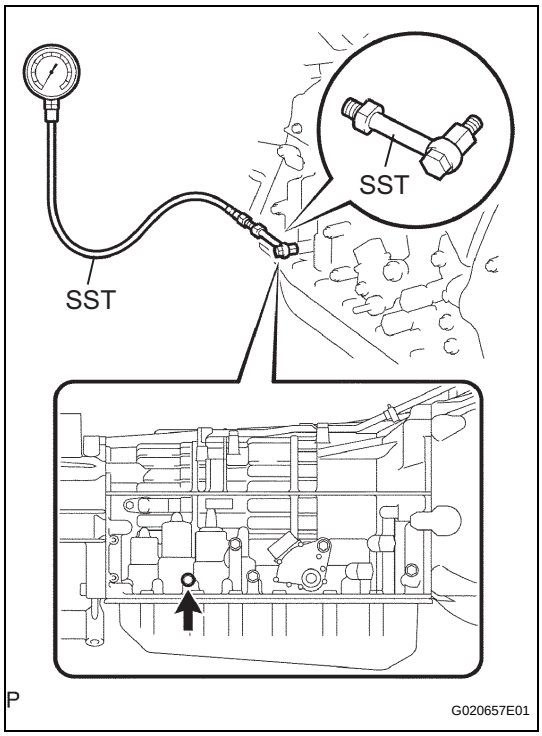

NOTICE:

- **Perform the test at the normal operating ATF (Automatic Transmission Fluid) temperature: 50 to 80°C (122 to 176°F).**
- **Be careful to prevent SST's hose from interfering with the exhaust pipe.**
- **Perform the test with the A/C OFF.**

HINT:
Performing the intelligent tester's ACTIVE TEST allows relay, VSV, actuator and other items to be operated without removing any parts. Performing the ACTIVE TEST early in troubleshooting is one way to save time.
The DATA LIST can be displayed during the ACTIVE TEST.

(a) Remove the test plug on the transmission case center right side and connect SST.
SST 09992-00095 (09992-00231, 09992-00271)
(b) Connect the intelligent tester to the DLC3.
(c) Start the engine and warm it up.
(d) Measure the line pressure with SST.
(e) Turn the intelligent tester ON.
(f) Enter the following menus: DIAGNOSIS / ENHANCED OBD II / ACTIVE TEST.
(g) Follow the instructions on the tester and perform the ACTIVE TEST.
(h) Measure the line pressure with SST.

Item	Test Details	Diagnostic Note
SOLENOID (SLT)*	[Test Details] Operate shift solenoid SLT and raise line pressure. [Vehicle Condition] • Vehicle stopped • IDL: ON HINT: OFF: Line pressure up (when Active Test of "SOLENOID (SLT)" is performed, ECM commands SLT solenoid to turn off) ON: No action (normal operation)	-

AT

*: "SOLENOID (SLT)" in the ACTIVE TEST is performed to check the line pressure changes by connecting SST to the automatic transmission, which is used in the HYDRAULIC TEST (See page AT-18) as well. Please note that the pressure values in the ACTIVE TEST and HYDRAULIC TEST are different.

NG → **REPLACE SHIFT SOLENOID VALVE SLT**

OK

3	INSPECT SHIFT SOLENOID VALVE S1

Shift Solenoid Valve S1:

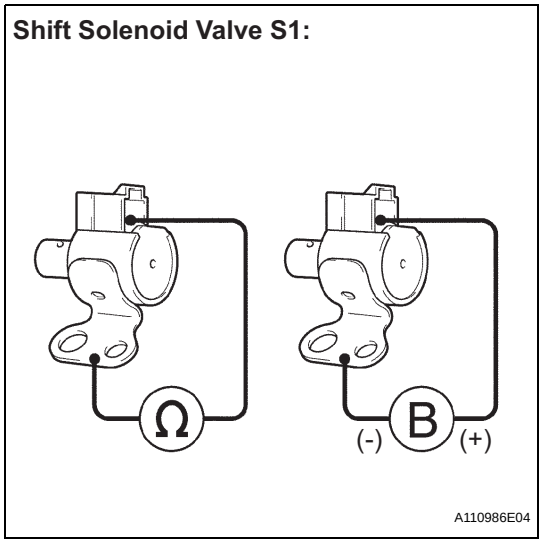

(a) Remove the shift solenoid valve S1.
(b) Measure the resistance.
Standard resistance

Tester Connection	Specified Condition
Solenoid Connector (S1) - Solenoid Body (S1)	11 to 15 Ω at 20°C (68°F)

(c) Connect the positive (+) lead to the terminal of the solenoid connector, and the negative (-) lead to the solenoid body.
OK:
The solenoid makes operating sounds.

NG → **REPLACE SHIFT SOLENOID VALVE S1**

OK

4	INSPECT TRANSMISSION VALVE BODY ASSEMBLY (See chapter 2 in the problem symptoms table)

OK:
There are no foreign objects on any valves and they operate smoothly.

NG → **REPAIR OR REPLACE TRANSMISSION VALVE BODY ASSEMBLY**

OK

REPAIR OR REPLACE AUTOMATIC TRANSMISSION ASSEMBLY

AT

DTC	P0756	Shift Solenoid "B" Performance (Shift Solenoid Valve S2)

DESCRIPTION

The ECM uses signals from the output shaft speed sensor and input speed sensor to detect the actual gear position (1st, 2nd, 3rd, 4th or 5th gear).
Then the ECM compares the actual gear with the shift schedule in the ECM memory to detect mechanical problems of the shift solenoid valves, valve body or automatic transmission (clutch, brake or gear, etc.).

DTC No.	DTC Detection Conditions	Trouble Areas
P0756	S2 stuck ON malfunction*1; The ECM determines that there is a malfunction when the following conditions are met (2-trip detection logic): (a) When the ECM directs the gearshift to switch to 1st gear, the actual gear is shifted to 2nd. (b) When the ECM directs the gearshift to switch to 5th gear, the engine overruns (clutch slips).	• Shift solenoid valve S2 remains open • Shift solenoid valve SLT remains open or closed • Valve body is blocked • Automatic transmission (clutch, brake or gear, etc.)
	S2 stuck OFF malfunction*2: The ECM determines that there is a malfunction when the following conditions are met (2-trip detection logic): (a) When the ECM directs the gearshift to switch to 1st gear, the actual gear is also shifted to 1st. (b) When the ECM directs the gearshift to switch to 2nd gear, the actual gear is shifted to 1st. (c) When the ECM directs the gearshift to switch to 5th gear, the actual gear is also shifted to 5th.	• Shift solenoid valve S2 remains closed • Shift solenoid valve SLT remains open or closed • Valve body is blocked • Automatic transmission (clutch, brake or gear, etc.)

HINT:
Gear positions in the event of a solenoid valve mechanical problem:

Gearshift controlled by ECM	1st	2nd	3rd	4th	5th
*1: Actual gear position under S2 stuck ON malfunction	2nd	2nd	3rd	3rd	N*
*2: Actual gear position under S2 stuck OFF malfunction	1st	1st	4th	4th	5th

N*: Neutral

MONITOR DESCRIPTION

AT

This DTC indicates "stuck ON malfunction" or "stuck OFF malfunction" of the shift solenoid valve S2. The ECM controls the gearshifts by turning the shift solenoid valves "ON/OFF". When the gear position directed by the ECM and the actual gear position do not match, the ECM illuminates the MIL and stores the DTC.

MONITOR STRATEGY

Related DTCs	P0756: Shift solenoid valve S2/OFF malfunction Shift solenoid valve S2/ON malfunction
Required sensors/Components (Main)	Shift solenoid valve S2
Required sensors/Components (Related)	Vehicle speed sensor, Throttle position sensor, Speed sensor (NT), Speed sensor (SP2)
Frequency of operation	Continuous

Duration	OFF malfunctions (A), (B) and (C): 0.4 seconds OFF malfunction (D): Immediate ON malfunctions (A) and (B): 0.4 seconds ON malfunction (C): 3 seconds ON malfunction (D): 0.5 seconds
MIL operation	2 driving cycles
Sequence of operation	None

TYPICAL ENABLING CONDITIONS

The following conditions are common to all OFF malfunctions (A), (B), (C) and (D) and ON malfunctions (A), (B), (C) and (D).

The monitor will run whenever the following DTCs are not present.	P0115 - P0118: ECT sensor P0125: Insufficient ECT for Closed Loop P0500: VSS P0748 - P799: Trans solenoid (range)
Turbine speed sensor (NT) circuit	No circuit malfunction
Output speed sensor (SP2) circuit	No circuit malfunction
Shift solenoid "A" (S1) circuit	No circuit malfunction
Shift solenoid "B" (S2) circuit	No circuit malfunction
Shift solenoid "E" (SR) circuit	No circuit malfunction
Pressure control solenoid "A" (SL1) circuit	No circuit malfunction
Pressure control solenoid "B" (SL2) circuit	No circuit malfunction
ECT (Engine Coolant Temperature) sensor circuit	No circuit malfunction
Knock sensor circuit	No circuit malfunction
ETCS (Electronic Throttle Control System)	System not down
Transmission shift position	"D"
ECT	40°C (104°F) or more
Spark advance from max. retard timing by knock sensor control	0° CA or more
Engine	Starting
Transfer range	"High" *1

AT

*1: Following conditions are met

Vehicle speed sensor "A" circuit	No circuit malfunction
Output speed sensor circuit	No circuit malfunction
Transfer output speed	143 rpm or more
Transfer input speed/Transfer output speed	0.9 to 1.1

OFF malfunction (A)

ECM selected gear	1st
Vehicle speed	1.2 to 24.9 mph (2 to 40 km/h)
Throttle valve opening angle	6.5 % or more at engine speed of 2,000 rpm (Conditions vary with engine speed)

OFF malfunction (B)

ECM selected gear	2nd
Vehicle speed	1.2 mph (2 km/h) or more
Output speed	2nd → 1st down shift point or more
Throttle valve opening angle	6.5 % or more at engine speed of 2,000 rpm (Conditions vary with engine speed)

OFF malfunction (C)

Current ECM selected gear	5th
Last ECM selected gear	4th
Continuous time of ECM selecting 4th gear	2 seconds or more
Actual gear when ECM selected 4th gear	4th

OFF malfunction (D)

Current ECM selected gear	5th
Last ECM selected gear	4th

ON malfunction (A)

ECM selected gear	1st
Vehicle speed	1.2 to 24.9 mph (2 to 40 km/h)
Throttle valve opening angle	6.5 % or more at engine speed of 2,000 rpm (Conditions vary with engine speed)

ON malfunction (B)

ECM selected gear	4th
Vehicle speed	1.2 mph (2 km/h) or more
Throttle valve opening angle	6.5 % or more at engine speed of 2,000 rpm (Conditions vary with engine speed)

ON malfunction (C)

Current ECM selected gear	5th
Last ECM selected gear	4th
Vehicle speed (During transition from 4th to 5th gear)	Less than 62.2 mph (100 km/h)

ON malfunction (D)

ECM selected gear	5th
Engine speed - Turbine speed (NE - NT) (After transition from 4th to 5th gear)	150 rpm or less
Vehicle speed (After transition from 4th to 5th gear)	Less than 62.2 mph (100 km/h)

AT

TYPICAL MALFUNCTION THRESHOLDS

[OFF malfunction]

All of the following conditions are met: OFF malfunctions (A), (B), (C) and (D)

2 detections are necessary in 1 driving cycle.

1st detection; temporary flag ON

2nd detection; pending fault code ON

OFF malfunction (A)

Turbine speed/Output speed	3.30 to 7.50 (Actual gear is 1st)

OFF malfunction (B)

Turbine speed/Output speed	3.30 to 7.50 (Actual gear is 1st)

OFF malfunction (C)

Turbine speed/Output speed	0.65 to 0.79 (Actual gear is 5th)

OFF malfunction (D)

Output record from ECM for 4th → 5th upshifting	Recorded

[ON malfunction]

ON malfunction (A) or (B) and ON malfunction (C) or (D) are met:

ON malfunction (A)

Turbine speed/Output speed	1.91 to 2.35 (Actual gear is 2nd)

ON malfunction (B)

Turbine speed/Output speed	1.28 to 1.53 (Actual gear is 3rd)

ON malfunction (C)

Turbine speed - Output speed x 4th gear ratio	1,000 rpm or more

ON malfunction (D)

Turbine speed - Output speed x 5th gear ratio	1,000 rpm or more

INSPECTION PROCEDURE

HINT:

Performing the ACTIVE TEST using the intelligent tester allows components, such as the relay, VSV, and actuator, to be operated without removing any parts. Performing the ACTIVE TEST as a first step of troubleshooting is one method of shortening labor time.

It is possible to display the DATA LIST during the ACTIVE TEST.

1. Warm up the engine.
2. Turn the ignition switch off.
3. Connect the intelligent tester together with the CAN VIM (Controller Area Network Vehicle Interface Module) to the DLC3.
4. Turn the ignition switch to the ON position.
5. Push the "ON" button of the tester.
6. Clear the DTC.
7. Select the items "DIAGNOSIS / ENHANCED OBD II / ACTIVE TEST / SHIFT".
8. According to the display on the tester, perform the "ACTIVE TEST".

HINT:

While driving, the shift position can be changed with the intelligent tester.

Comparing the shift position directed by the ACTIVE TEST with the actual shift position enables the problem to be confirmed (See page AT-35).

Item	Test Details	Diagnostic Note
SHIFT	[Test Details] Operate the shift solenoid valve and set each shift position manually. [Vehicle Condition] Vehicle Speed: Less than 30 mph (50 km/h) [Others] • Press → button: Shift up • Press ← button: Shift down	Possible to check the operation of the shift solenoid valves. HINT: Shifting to the 5th gear is possible only when the vehicle is stationary with the engine idling.

AT

HINT:

- This test can be conducted when the vehicle speed is 30 mph (50 km/h) or less.
- The 4th to 5th up-shifting must be performed with the accelerator pedal released.
- The 5th to 4th down-shifting must be performed with the accelerator pedal released.
- Do not operate the accelerator pedal for at least 2 seconds after shifting and do not shift successively.
- The shift position directed by the ECM is shown in the DATA LIST / SHIFT display on the intelligent tester.
- The shift solenoid valve S2 is turned on/off normally when the shift lever is in the D position:

Gearshift controlled by ECM	1st	2nd	3rd	4th	5th
Shift solenoid valve S2	OFF	ON	ON	OFF	OFF

1	CHECK ANY OTHER DTCS OUTPUT (IN ADDITION TO DTC P0756)

(a) Connect the intelligent tester to the DLC3.
(b) Turn the ignition switch to the ON position and push the intelligent tester main switch ON.
(c) Select the items "DIAGNOSIS / ENHANCED OBD II / DTC INFO / CURRENT CODES".
(d) Read the DTCs using the intelligent tester.

Result:

Display (DTC Output)	Proceed to
Only "P0756" is output	A
"P0756" and other DTCs	B

HINT:
If any codes besides "P0756" are output, perform troubleshooting for those DTCs first.

B → GO TO DTC CHART

A

2	PERFORM ACTIVE TEST USING INTELLIGENT TESTER (SOLENOID (SLT)) (See page AT-86)

NG → REPLACE SHIFT SOLENOID VALVE SLT

OK

3	INSPECT SHIFT SOLENOID VALVE S2

AT

Shift Solenoid Valve S2:

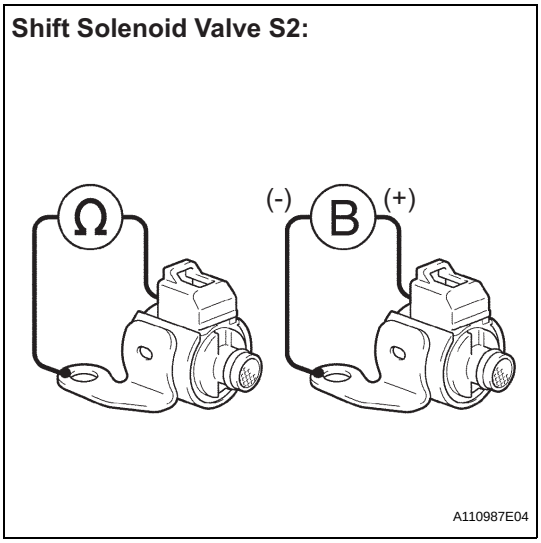

(a) Remove the shift solenoid valve S2.
(b) Measure the resistance.
Standard resistance

Tester Connection	Specified Condition
Solenoid Connector (S2) - Solenoid Body (S2)	11 to 15 Ωat 20°C (68°F)

(c) Connect the positive (+) lead to the terminal of the solenoid connector, and the negative (-) lead to the solenoid body.
OK:
The solenoid makes operating sounds.

NG → REPLACE SHIFT SOLENOID VALVE S2

OK

4	**INSPECT TRANSMISSION VALVE BODY ASSEMBLY (See chapter 2 in the problem symptoms table)**

OK:
There are no foreign objects on any valves and they operate smoothly.

NG → **REPAIR OR REPLACE TRANSMISSION VALVE BODY ASSEMBLY**

OK

REPAIR OR REPLACE AUTOMATIC TRANSMISSION ASSEMBLY

DTC	P0771	Shift Solenoid "E" Performance (Shift Solenoid Valve SR)

DESCRIPTION

The ECM uses signals from the output shaft speed sensor and input speed sensor to detect the actual gear position (1st, 2nd, 3rd, 4th or 5th gear).
Then the ECM compares the actual gear with the shift schedule in the ECM memory to detect mechanical problems of the shift solenoid valves, valve body or automatic transmission (clutch, brake or gear, etc.).

DTC No.	DTC Detection Conditions	Trouble Areas
P0771	SR stuck ON malfunction*1: The ECM determines that there is a malfunction when the following condition is met (2-trip detection logic): (a) When the ECM directs the gearshift to switch to 2nd gear, the engine overruns (clutch slips).	• Shift solenoid valve SR remains open • Shift solenoid valve SL1 remains open • Shift solenoid valve SLT remains open or closed • Valve body is blocked • Automatic transmission (clutch, brake or gear, etc.)
	SR stuck OFF malfunction*2: The ECM determines that there is a malfunction when the following condition is met (2-trip detection logic): (a) When the ECM directs the gearshift to switch to 5th gear, the actual gear is shifted to 4th.	• Shift solenoid valve SR remains closed • Shift solenoid valve SL1 remains closed • Shift solenoid valve SLT remains open or closed • Valve body is blocked • Automatic transmission (clutch, brake or gear, etc.)

HINT:
Gear positions in the event of a solenoid valve mechanical problem:

Gearshift controlled by ECM	1st	2nd	3rd	4th	5th
*1: Actual gear position under SR stuck ON malfunction	1st	2nd	3rd	4th	5th
*2: Actual gear position under SR stuck OFF malfunction	1st	2nd	3rd	4th	4th

N*: Neutral

MONITOR DESCRIPTION

This DTC indicates "stuck ON malfunction" or "stuck OFF malfunction" of the shift solenoid valve SR or SL1. The ECM controls the gearshifts by turning the shift solenoid valves "ON/OFF". When the gear position directed by the ECM and the actual gear position do not match, the ECM illuminates the MIL and stores the DTC.

AT

MONITOR STRATEGY

Related DTCs	P0771: Shift solenoid valve SR/OFF malfunction Shift solenoid valve SR/ON malfunction
Required sensors/Components (Main)	Shift solenoid valve SR
Required sensors/Components (Related)	Speed sensor (NT), Speed sensor (SP2), Crankshaft position sensor (NE)
Frequency of operation	Continuous
Duration	OFF malfunction (A): 0.4 seconds OFF malfunctions (B) and (C): Immediate ON malfunction: 0.15 seconds
MIL operation	2 driving cycles
Sequence of operation	None

TYPICAL ENABLING CONDITIONS

The following conditions are common to all OFF malfunctions (A), (B) and (C) and ON malfunction.

The monitor will run whenever the following DTCs are not present.	P0115 - P0118: ECT sensor P0125: Insufficient ECT for Closed Loop P0500: VSS P0748 - P0799: Trans solenoid (range)
Turbine speed sensor (NT) circuit	No circuit malfunction
Output speed sensor (SP2) circuit	No circuit malfunction
Shift solenoid "A" (S1) circuit	No circuit malfunction
Shift solenoid "B" (S2) circuit	No circuit malfunction
Shift solenoid "E" (SR) circuit	No circuit malfunction
Pressure control solenoid "A" (SL1) circuit	No circuit malfunction
Pressure control solenoid "B" (SL2) circuit	No circuit malfunction
ECT (Engine Coolant Temperature) sensor circuit	No circuit malfunction
Knock sensor circuit	No circuit malfunction
ETCS (Electronic Throttle Control System)	System not down
Transmission shift position	"D"
ECT	40°C (104°F) or more
Spark advance from max. retard timing by knock sensor control	0° CA or more
Engine	Starting
Transfer range	"High" *1

*1: Following conditions are met

Vehicle speed sensor "A" circuit	No circuit malfunction
Output speed sensor circuit	No circuit malfunction
Transfer output speed	143 rpm or more
Transfer input speed/Transfer output speed	0.9 to 1.1

OFF malfunction (A)

ECM selected gear	5th
Vehicle speed	1.2 mph (2 km/h) or more
Throttle valve opening angle	6.5 % or more at engine speed of 2,000 rpm (Conditions vary with engine speed)

OFF malfunction (B)

Current ECM selected gear	5th
Last ECM selected gear	4th
Continuous time of ECM selecting 4th gear	2 seconds or more

OFF malfunction (C)

Current ECM selected gear	5th
Last ECM selected gear	4th

ON malfunction

Current ECM selected gear	2nd
Last ECM selected gear	1st
Throttle valve opening angle (During transition from 1st to 2nd gear)	3.5 % or more at engine speed of 2,000 rpm (Conditions vary with engine speed)

TYPICAL MALFUNCTION THRESHOLDS

[OFF malfunction]
All of the following conditions are met: OFF malfunctions (A), (B) and (C)
2 detections are necessary in 1 driving cycle.
1st detection; temporary flag ON

2nd detection; pending fault code ON

OFF malfunction (A)

Turbine speed/Output speed	0.93 to 1.07 (Actual gear is 4th)

OFF malfunction (B)

Turbine speed/Output speed	No change as follows: 0.93 to 1.07 (Actual gear is 4th) ↓ 0.65 to 0.79 (Actual gear is 5th)

OFF malfunction (C)

Output record from ECM for 4th → 5th upshifting	Recorded

[ON malfunction]
2 detections are necessary in 1 driving cycle.
1st detection; temporary flag ON
2nd detection; pending fault code ON

Turbine speed - Output speed x 1st gear ratio	150 rpm or more

INSPECTION PROCEDURE

HINT:
Performing the ACTIVE TEST using the intelligent tester allows components, such as the relay, VSV, and actuator, to be operated without removing any parts. Performing the ACTIVE TEST as a first step of troubleshooting is one method of shortening labor time.
It is possible to display the DATA LIST during the ACTIVE TEST.

1. Warm up the engine.
2. Turn the ignition switch off.
3. Connect the intelligent tester together with the CAN VIM (Controller Area Network Vehicle Interface Module) to the DLC3.
4. Turn the ignition switch to the ON position.
5. Push the "ON" button of the tester.
6. Clear the DTC.
7. Select the items "DIAGNOSIS / ENHANCED OBD II / ACTIVE TEST / SHIFT".
8. According to the display on the tester, perform the "ACTIVE TEST".

AT

HINT:
While driving, the shift position can be changed with the intelligent tester.
Comparing the shift position directed by the ACTIVE TEST with the actual shift position enables the problem to be confirmed (See page AT-35).

Item	Test Details	Diagnostic Note
SHIFT	[Test Details] Operate the shift solenoid valve and set each shift position manually. [Vehicle Condition] Vehicle Speed: Less than 30 mph (50 km/h) [Others] • Press → button: Shift up • Press ← button: Shift down	Possible to check the operation of the shift solenoid valves. HINT: Shifting to the 5th gear is possible only when the vehicle is stationary with the engine idling.

HINT:

- This test can be conducted when the vehicle speed is 30 mph (50 km/h) or less.
- The 4th to 5th up-shifting must be performed with the accelerator pedal released.
- The 5th to 4th down-shifting must be performed with the accelerator pedal released.
- Do not operate the accelerator pedal for at least 2 seconds after shifting and do not shift successively.
- The shift position directed by the ECM is shown in the DATA LIST / SHIFT display on the intelligent tester.
- The shift solenoid valve SR and SL1 are turned on/off normally when the shift lever is in the D position:

Gearshift controlled by ECM	1st	2nd	3rd	4th	5th
Shift solenoid valve SR	OFF	OFF	OFF	OFF	ON
Shift solenoid valve SL1	OFF	OFF	OFF	OFF	ON

1 **CHECK ANY OTHER DTCS OUTPUT (IN ADDITION TO DTC P0771)**

(a) Connect the intelligent tester to the DLC3.
(b) Turn the ignition switch to the ON position and push the intelligent tester main switch ON.
(c) Select the items "DIAGNOSIS / ENHANCED OBD II / DTC INFO / CURRENT CODES".
(d) Read the DTCs using the intelligent tester.

Result:

Display (DTC Output)	Proceed to
Only "P0771" is output	A
"P0771" and other DTCs	B

HINT:
If any codes besides "P0771" are output, perform troubleshooting for those DTCs first

B → **GO TO DTC CHART**

A

2 **PERFORM ACTIVE TEST USING INTELLIGENT TESTER (SOLENOID (SLT)) (See page AT-86)**

NG → **REPLACE SHIFT SOLENOID VALVE SLT**

OK

3 **INSPECT SHIFT SOLENOID VALVE SR**

Shift Solenoid Valve SR:

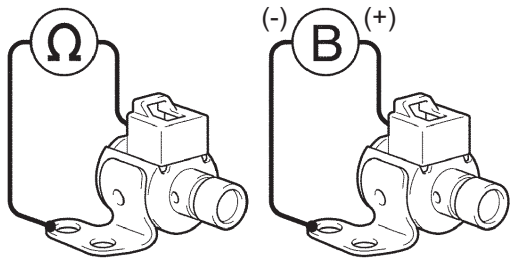

A110988E05

(a) Remove the shift solenoid valve SR.
(b) Measure the resistance.
Standard resistance

Tester Connection	Specified Condition
Solenoid Connector (SR) - Solenoid Body (SR)	11 to 15 Ω at 20°C (68°F)

(c) Connect the positive (+) lead to the terminal of the solenoid connector, and the negative (-) lead to the solenoid body.
OK:
The solenoid makes operating sounds

NG → **REPLACE SHIFT SOLENOID VALVE SR**

AT

OK

4	INSPECT SHIFT SOLENOID VALVE SL1

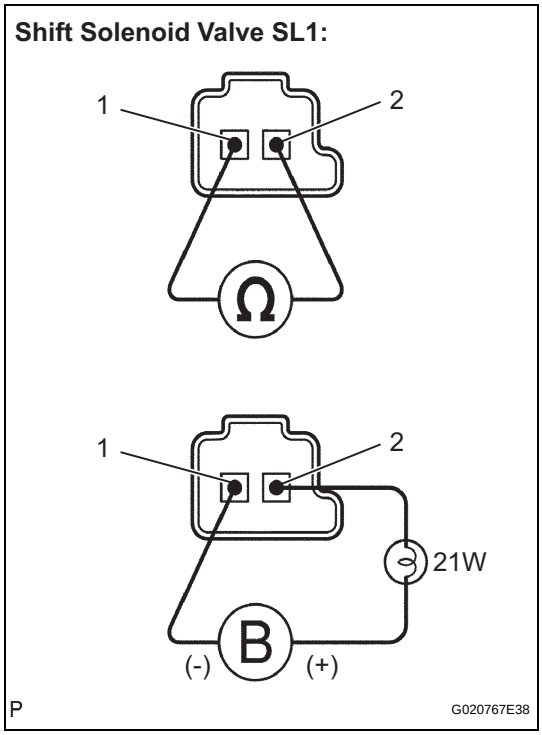

(a) Remove the shift solenoid valve SL1.
(b) Measure the resistance.
Standard resistance

Tester Connection	Specified Condition
1 - 2	5.0 to 5.6 Ω at 20°C (68°F)

(c) Connect the positive (+) lead with a 21 W bulb to terminal 2 and the negative (-) lead to terminal 1 of the solenoid valve connector, then check the movement of the valve.
OK:
The solenoid makes operating sounds.

NG → **REPLACE SHIFT SOLENOID VALVE SL1**

OK

5	INSPECT TRANSMISSION VALVE BODY ASSEMBLY (See chapter 2 in the problem symptoms table)

AT

OK:
There are no foreign objects on any valves and they operate smoothly.

NG → **REPAIR OR REPLACE TRANSMISSION VALVE BODY ASSEMBLY**

OK

REPAIR OR REPLACE AUTOMATIC TRANSMISSION ASSEMBLY

DTC	P0776	Pressure Control Solenoid "B" Performance (Shift Solenoid Valve SL2)

DESCRIPTION

The ECM uses signals from the output shaft speed sensor and input speed sensor to detect the actual gear position (1st, 2nd, 3rd, 4th or 5th gear).
Then the ECM compares the actual gear with the shift schedule in the ECM memory to detect mechanical problems of the shift solenoid valves, valve body or automatic transmission (clutch, brake or gear, etc.).

DTC No.	DTC Detection Conditions	Trouble Areas
P0776	SL2 stuck ON malfunction*1: The ECM determines that there is a malfunction when the following conditions are met (2-trip detection logic): (a) When the ECM directs the gearshift to switch to 4th gear, the actual gear is also shifted to 4th. (b) When the ECM directs the gearshift to switch to 5th gear, the engine overruns (clutch slips).	• Shift solenoid valve SL2 remains open • Shift solenoid valve SLT remains open or closed • Valve body is blocked • Automatic transmission (clutch, brake or gear, etc.)

HINT:
Gear positions in the event of a solenoid valve mechanical problem:

Gearshift controlled by ECM	1st	2nd	3rd	4th	5th
*1: Actual gear position under SL2 stuck ON malfunction	1st	2nd	3rd	4th	N*

N*: Neutral

MONITOR DESCRIPTION

This DTC indicates "stuck ON malfunction" of the shift solenoid valve SL2.
The ECM controls the gearshifts by turning the shift solenoid valves "ON/OFF". When the gear position directed by the ECM and the actual gear position do not match, the ECM illuminates the MIL and stores the DTC.

MONITOR STRATEGY

Related DTCs	P0776: Shift solenoid valve SL2/ON malfunction
Required sensors/Components (Main)	Shift solenoid valve SL2
Required sensors/Components (Related)	Speed sensor (NT), Speed sensor (SP2), Crankshaft position sensor (NE)
Frequency of operation	Continuous
Duration	ON malfunctions (A), (B) and (C): 0.4 seconds ON malfunction (D): 3 seconds ON malfunction (E): 0.5 seconds
MIL operation	2 driving cycles
Sequence of operation	None

AT

TYPICAL ENABLING CONDITIONS

The following conditions are common to all ON malfunctions (A), (B), (C), (D) and (E).

The monitor will run whenever the following DTCs are not present.	P0115 - P0118: ECT sensor P0125: Insufficient ECT for Closed Loop P0500: VSS P0748 - P0799: Trans solenoid (range)
Turbine speed sensor (NT) circuit	No circuit malfunction
Output speed sensor (SP2) circuit	No circuit malfunction
Shift solenoid "A" (S1) circuit	No circuit malfunction

Shift solenoid "B" (S2) circuit	No circuit malfunction
Shift solenoid "E" (SR) circuit	No circuit malfunction
Pressure control solenoid "A" (SL1) circuit	No circuit malfunction
Pressure control solenoid "B" (SL2) circuit	No circuit malfunction
ECT (Engine Coolant Temperature) sensor circuit	No circuit malfunction
Knock sensor circuit	No circuit malfunction
ETCS (Electronic Throttle Control System)	System not down
Transmission shift position	"D"
ECT	40°C (104°F) or more
Spark advance from max. retard timing by knock sensor control	0° CA or more
Engine	Starting
Transfer range	"High" *1

*1: Following conditions are met

Vehicle speed sensor "A" circuit	No circuit malfunction
Output speed sensor circuit	No circuit malfunction
Transfer output speed	143 rpm or more
Transfer input speed/Transfer output speed	0.9 to 1.1

ON malfunction (A)

ECM selected gear	1st
Vehicle speed	1.2 to 24.9 mph (2 to 40 km/h)
Throttle valve opening angle	6.5 % or more at engine speed of 2,000 rpm (Conditions vary with engine speed)

ON malfunction (B)

ECM selected gear	3rd
Vehicle speed	1.2 mph (2 km/h) or more
Throttle valve opening angle	6.5 % or more at engine speed of 2,000 rpm (Conditions vary with engine speed)

ON malfunction (C)

ECM selected gear	4th
Vehicle speed	1.2 mph (2 km/h) or more
Throttle valve opening angle	6.5 % or more at engine speed of 2,000 rpm (Conditions vary with engine speed)

AT

ON malfunction (D)

Current ECM selected gear	5th
Last ECM selected gear	4th
Vehicle speed (During transition from 4th to 5th gear)	Less than 62.2 mph (100 km/h)

ON malfunction (E)

ECM selected gear	5th
Engine speed - Turbine speed (NE - NT) (After transition from 4th to 5th gear)	150 rpm or less
Vehicle speed (After transition from 4th to 5th gear)	Less than 62.2 mph (100 km/h)

TYPICAL MALFUNCTION THRESHOLDS

[ON malfunction]

Both of the following conditions are met:

- ON malfunctions (A) and (B), or ON malfunction (C)
- ON malfunction (D) or (E)

ON malfunction (A)

Turbine speed/Output speed	3.30 to 7.50 (Actual gear is 1st)

ON malfunction (B)

Turbine speed/Output speed	1.28 to 1.53 (Actual gear is 3rd)

ON malfunction (C)

Turbine speed/Output speed	0.93 to 1.07 (Actual gear is 4th)

ON malfunction (D)

Turbine speed - Output speed x 4th gear ratio	1,000 rpm or more

ON malfunction (E)

Turbine speed - Output speed x 5th gear ratio	1,000 rpm or more

INSPECTION PROCEDURE

HINT:
Performing the ACTIVE TEST using the intelligent tester allows components, such as the relay, VSV, and actuator, to be operated without removing any parts. Performing the ACTIVE TEST as a first step of troubleshooting is one method of shortening labor time.
It is possible to display the DATA LIST during the ACTIVE TEST.

1. Warm up the engine.
2. Turn the ignition switch off.
3. Connect the intelligent tester together with the CAN VIM (Controller Area Network Vehicle Interface Module) to the DLC3.
4. Turn the ignition switch to the ON position.
5. Push the "ON" button of the tester.
6. Clear the DTC.
7. Select the items "DIAGNOSIS / ENHANCED OBD II / ACTIVE TEST / SHIFT".
8. According to the display on the tester, perform the "ACTIVE TEST".

HINT:
While driving, the shift position can be changed with the intelligent tester.
Comparing the shift position directed by the ACTIVE TEST with the actual shift position enables the problem to be confirmed (See page AT-35).

AT

Item	Test Details	Diagnostic Note
SHIFT	[Test Details] Operate the shift solenoid valve and set each shift position manually. [Vehicle Condition] Vehicle Speed: Less than 30 mph (50 km/h) [Others] • Press → button: Shift up • Press ← button: Shift down	Possible to check the operation of the shift solenoid valves. HINT: Shifting to the 5th gear is possible only when the vehicle is stationary with the engine idling.

HINT:

- This test can be conducted when the vehicle speed is 30 mph (50 km/h) or less.
- The 4th to 5th up-shifting must be performed with the accelerator pedal released.
- The 5th to 4th down-shifting must be performed with the accelerator pedal released.
- Do not operate the accelerator pedal for at least 2 seconds after shifting and do not shift successively.
- The shift position directed by the ECM is shown in the DATA LIST / SHIFT display on the intelligent tester.
- The shift solenoid valve SL2 is turned on/off normally when the shift lever is in the D position:

Gearshift controlled by ECM	1st	2nd	3rd	4th	5th
Shift solenoid valve SL2	ON	ON	ON	ON	OFF

1	CHECK ANY OTHER DTCS OUTPUT (IN ADDITION TO DTC P0776)

(a) Connect the intelligent tester to the DLC3.
(b) Turn the ignition switch to the ON position and push the intelligent tester main switch ON.
(c) Select the items "DIAGNOSIS / ENHANCED OBD II / DTC INFO / CURRENT CODES".
(d) Read the DTCs using the intelligent tester.

Result:

Display (DTC Output)	Proceed to
Only "P0776" is output	A
"P0776" and other DTCs	B

HINT:
If any codes besides "P0776" are output, perform troubleshooting for those DTCs first.

B → GO TO DTC CHART

A

2	PERFORM ACTIVE TEST USING INTELLIGENT TESTER (SOLENOID (SLT)) (See page AT-86)

NG → REPLACE SHIFT SOLENOID VALVE SLT

OK

3	INSPECT SHIFT SOLENOID VALVE SL2

AT

Shift Solenoid Valve SL2:

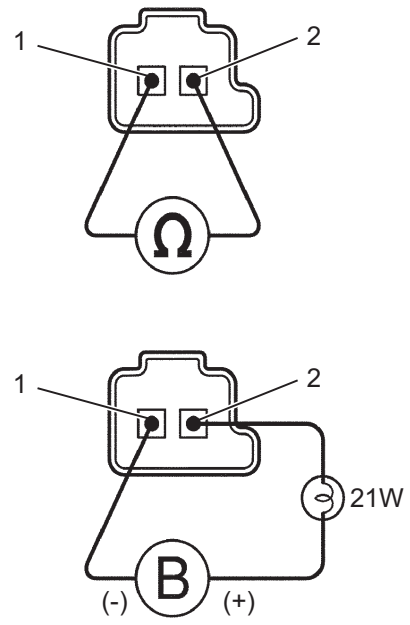

(a) Remove the shift solenoid valve SL2.
(b) Measure the resistance.
Standard resistance

Tester Connection	Specified Condition
1 - 2	5.0 to 5.6 Ωat 20°C (68°F)

(c) Connect the positive (+) lead with a 21 W bulb to terminal 2 and the negative (-) lead to terminal 1 of the solenoid valve connector, then check the movement of the valve.
OK:
The solenoid makes operating sounds.

NG → REPLACE SHIFT SOLENOID VALVE SL2

OK

4	INSPECT TRANSMISSION VALVE BODY ASSEMBLY (See chapter 2 in the problem symptoms table)

OK:
There are no foreign objects on any valves and they operate smoothly.

NG → REPAIR OR REPLACE TRANSMISSION VALVE BODY ASSEMBLY

OK

REPAIR OR REPLACE AUTOMATIC TRANSMISSION ASSEMBLY

DTC	P0778	Pressure Control Solenoid "B" Electrical (Shift Solenoid Valve SL2)

DESCRIPTION

Shifting from 1st to 5th is performed in combination with the ON and OFF operation of the shift solenoid valves S1, S2, SR, SL1 and SL2 which are controlled by the ECM. If an open or short circuit occurs in any of the shift solenoid valves, the ECM controls the remaining normal shift solenoid valves to allow the vehicle to be driven smoothly (See page AT-35).

DTC No.	DTC Detection Conditions	Trouble Areas
P0778	The ECM checks for an open or short in the shift solenoid valve SL2 circuit (1-trip detection logic): • Output signal duty equals 100 %. (NOTE: SL2 output signal duty is less than 100 % under normal conditions)	• Open or short in shift solenoid valve SL2 circuit • Shift solenoid valve SL2 • ECM

MONITOR DESCRIPTION

This DTC indicates an open or short in the shift solenoid valve SL2 circuit. The ECM controls the gearshift by turning the shift solenoid valves "ON/OFF". When there is an open or short circuit in any shift solenoid valve circuit, the ECM detects the problem, illuminates the MIL and stores the DTC. And the ECM performs the fail-safe function and turns the other functioning shift solenoid valves "ON/OFF". (If an open or short circuit is detected, the ECM cuts the current to the circuit.)
If the ECM detects an open or short in the shift solenoid valve SL2 circuit, the ECM determines that there is a malfunction (See page AT-35).

MONITOR STRATEGY

Related DTCs	P0778: Shift solenoid valve SL2/Range check
Required sensors/Components	Shift solenoid valve SL2
Frequency of operation	Continuous
Duration	1 second
MIL operation	Immediate
Sequence of operation	None

AT

TYPICAL ENABLING CONDITIONS

The monitor will run whenever the following DTCs are not present.	None
Battery voltage	10 V or more
CPU requested duty ratio to SL2	Less than 75 %
Ignition switch	ON
Starter	OFF

TYPICAL MALFUNCTION THRESHOLDS

Output signal duty	100 %

COMPONENT OPERATING RANGE

Output signal duty	Less than 100 %

WIRING DIAGRAM

B37
Electronically Controlled Transmission Solenoid

(Shift Solenoid Valve SL2)

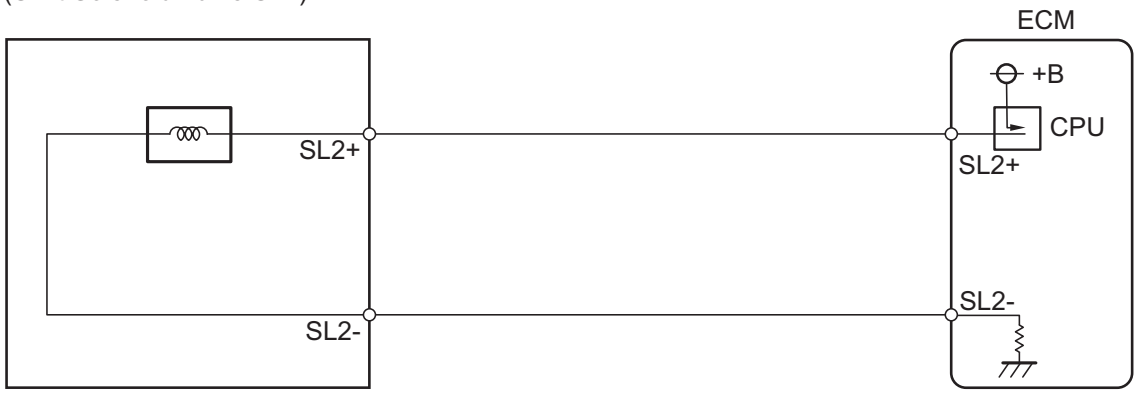

Y

C130126E02

INSPECTION PROCEDURE

HINT:
The shift solenoid valve SL2 is turned on/off normally when the shift lever is in the D position:

Gearshift controlled by ECM	1st	2nd	3rd	4th	5th
Shift solenoid valve SL2	ON	ON	ON	ON	OFF

1 INSPECT TRANSMISSION WIRE (SL2)

Transmission Wire Side:

(Connector Front View):

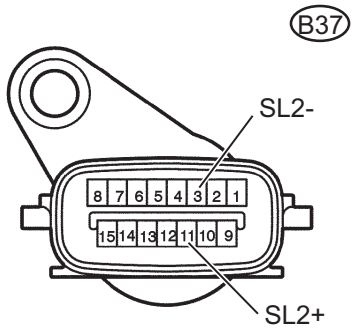

P

C110342E79

(a) Disconnect the transmission wire connector from the transmission.
(b) Measure the resistance.
Standard resistance

Tester Connection	Specified Condition
11 (SL2+) - 3 (SL2-)	5.0 to 5.6 Ωat 20°C (68°F)

(c) Measure the resistance.
Standard resistance (Check for short):

Tester Connection	Specified Condition
11 (SL2+) - Body ground	10 kΩ or higher
3 (SL2-) - Body ground	10 kΩ or higher

NG → **Go to step 3**

OK

AT

2	CHECK HARNESS AND CONNECTOR (TRANSMISSION WIRE - ECM)

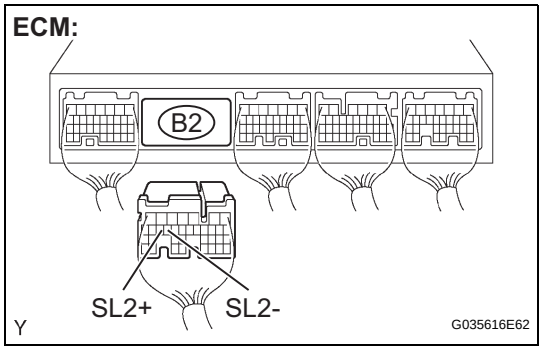

(a) Connect the transmission wire connector to the transmission.
(b) Disconnect the ECM connector.
(c) Measure the resistance.
Standard resistance

Tester Connection	Specified Condition
B2-17 (SL2+) - B2-16 (SL2-)	5.0 to 5.6 Ω at 20°C (68°F)

(d) Measure the resistance.
Standard resistance (Check for short)

Tester Connection	Specified Condition
B2-17 (SL2+) - Body ground	10 kΩ or higher
B2-16 (SL2-) - Body ground	10 kΩ or higher

NG → **REPAIR OR REPLACE HARNESS OR CONNECTOR**

OK

REPLACE ECM

3	INSPECT SHIFT SOLENOID VALVE SL2

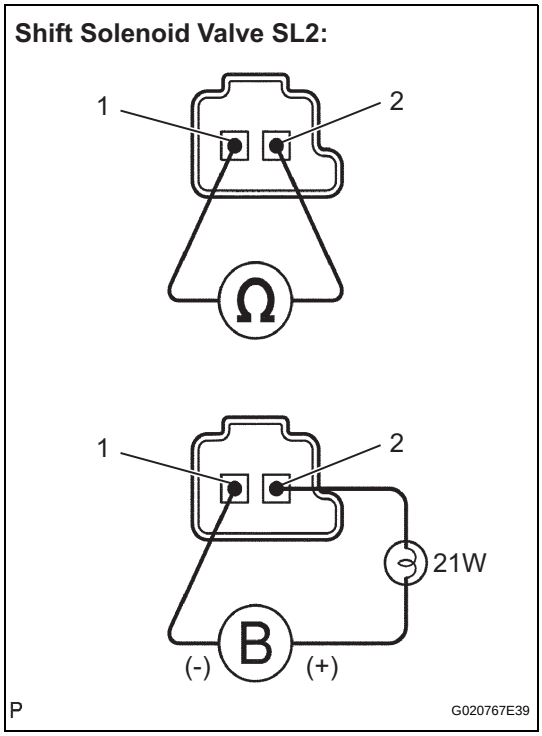

(a) Remove the shift solenoid valve SL2.
(b) Measure the resistance.
Standard resistance

Tester Connection	Specified Condition
1 - 2	5.0 to 5.6 Ω at 20°C (68°F)

(c) Connect the positive (+) lead with a 21 W bulb to terminal 2 and the negative (-) lead to terminal 1 of the solenoid valve connector, then check the movement of the valve.
OK:
The solenoid makes operating sounds.

NG → **REPLACE SHIFT SOLENOID VALVE SL2**

AT

OK

REPAIR OR REPLACE TRANSMISSION WIRE

DTC	P0781	1-2 Shift (1-2 Shift Valve)

DESCRIPTION

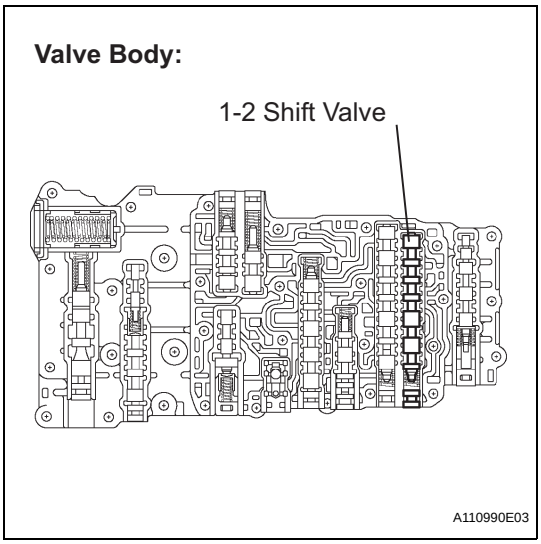

The 1-2 shift valve performs shifting to 1st gear and other gears.

DTC No.	DTC Detection Conditions	Trouble Areas
P0781	1-2 shift valve malfunction: The ECM determines that there is a malfunction when the following conditions (a) and (b), or (a) and (c) are met (2-trip detection logic): (a) When the ECM directs the gearshift to switch to 2nd gear, the actual gear is shifted to 1st. (b) When the ECM directs the gearshift to switch to 4th gear, the actual gear is shifted to 3rd. (c) When the ECM directs the gearshift to switch to 5th gear, the engine overruns (clutch slips)	• Valve body is blocked up or stuck (1-2 shift valve) • Shift solenoid valve SLT remains open or closed • Automatic transmission (clutch, brake or gear, etc.)

HINT:
Gear positions in the event of a 1-2 shift valve mechanical problem:

AT

Gearshift controlled by ECM	1st	2nd	3rd	4th	5th
Actual gear position under malfunction	1st	1st	3rd	3rd	N*

N*: Neutral

MONITOR DESCRIPTION

This DTC indicates that the 1-2 shift valve in the valve body is locked in the direction of the spring compression. The ECM controls the gearshifts by turning the shift solenoid valves "ON/OFF" and switching oil pressure to the valves in the valve body.
The ECM calculates the "actual" transmission gear by comparing the signals from the input speed sensor (NT) and the output speed sensor (SP2). The ECM can detect many mechanical problems in the shift solenoids, valve body, and the transmission clutches, brakes, and gears. If the ECM detects that the actual gear position and the commanded gear position are different, it will illuminate the MIL and store the DTC .

MONITOR STRATEGY

Related DTCs	P0781: Valve body/Rationality check
Required sensors/Components (Main)	Valve body
Required sensors/Components (Related)	Automatic transmission assembly, Speed sensor (NT), Speed sensor (SP2), Vehicle speed sensor, Throttle position sensor

Frequency of operation	Continuous
Duration	Conditions (A) and (B) 0.4 seconds Condition (C) 3 seconds Condition (D) 0.5 seconds
MIL operation	2 driving cycles
Sequence of operation	None

TYPICAL ENABLING CONDITIONS

The following conditions are common to all Conditions (A), (B), (C) and (D).

The monitor will run whenever the following DTCs are not present.	P0115 - P0118: ECT sensor P0125: Insufficient ECT for Closed Loop P0500: VSS P0748 - P0799: Trans Solenoid (range)
Turbine speed sensor (NT) circuit	No circuit malfunction
Output speed sensor (SP2) circuit	No circuit malfunction
Shift solenoid "A" (S1) circuit	No circuit malfunction
Shift solenoid "B" (S2) circuit	No circuit malfunction
Shift solenoid "E" (SR) circuit	No circuit malfunction
Pressure control solenoid "A" (SL1) circuit	No circuit malfunction
Pressure control solenoid "B" (SL2) circuit	No circuit malfunction
ECT (Engine Coolant Temperature) sensor circuit	No circuit malfunction
Knock sensor circuit	No circuit malfunction
ETCS (Electronic Throttle Control System)	System not down
Transmission shift position	"D"
ECT	40°C (104°F) or more
Spark advance from max. retard timing by knock sensor control	0°CA or more
Engine	Starting
Transfer range	"High" *1

*1: Following conditions are met

Vehicle speed sensor "A" circuit	No circuit malfunction
Output speed sensor circuit	No circuit malfunction
Transfer output speed	143 rpm or more
Transfer input speed/Transfer output speed	0.9 to 1.1

AT

Condition (A)

ECM selected gear	2nd
Vehicle speed	1.2 mph (2 km/h) or more
Output speed	2nd → 1st down shift point or more
Throttle valve opening angle	6.5 % or more at engine speed of 2,000 rpm (Conditions vary with engine speed)

Condition (B)

ECM selected gear	4th
Vehicle speed	1.2 mph (2 km/h) or more
Throttle valve opening angle	6.5 % or more at engine speed of 2,000 rpm (Conditions vary with engine speed)

Condition (C)

Current ECM selected gear	5th
Last ECM selected gear	4th

Vehicle speed (During transition from 4th to 5th gear)	Less than 62.2 mph (100 km/h)

Condition (D)

ECM selected gear	5th
Engine speed - Turbine speed (NE - NT) (After transition from 4th to 5th gear)	150 rpm or less
Vehicle speed (After transition from 4th to 5th gear)	Less than 62.2 mph (100 km/h)

TYPICAL MALFUNCTION THRESHOLDS

Condition (A) and Conditions (B), (C) or (D) are met:

Condition (A)

Turbine speed/Output speed	3.30 to 7.50 (Actual gear is 1st)

Condition (B)

Turbine speed/Output speed	1.28 to 1.53 (Actual gear is 3rd)

Condition (C)

Turbine speed - Output speed x 4th gear ratio	1,000 rpm or more

Condition (D)

Turbine speed - Output speed x 5th gear ratio	1,000 rpm or more

INSPECTION PROCEDURE

1	CHECK ANY OTHER DTCS OUTPUT (IN ADDITION TO DTC P0781)

(a) Connect the intelligent tester to the DLC3.
(b) Turn the ignition switch to the ON position and push the main switch ON.
(c) Select the items "DIAGNOSIS / ENHANCED OBD II / DTC INFO / CURRENT CODES".
(d) Read the DTCs using the intelligent tester.

Result:

Display (DTC Output)	Proceed to
Only "P0781" is output	A
"P0781" and other DTCs	B

HINT:
If any codes besides "P0781" are output, perform troubleshooting for those DTCs first.

B → GO TO DTC CHART

A

2	PERFORM ACTIVE TEST USING INTELLIGENT TESTER (SHIFT)

HINT:
Performing the ACTIVE TEST using the intelligent tester allows components, such as the relay, VSV, and actuator, to be operated without removing any parts. Performing the ACTIVE TEST as a first step of troubleshooting is one method of shortening labor time.
It is possible to display the DATA LIST during the ACTIVE TEST.

1. Warm up the engine.
2. Turn the ignition switch off.
3. Connect the intelligent tester together with the CAN VIM (Controller Area Network Vehicle Interface Module) to the DLC3.
4. Turn the ignition switch to the ON position.
5. Push the "ON" button of the tester.
6. Clear the DTC.
7. Select the items "DIAGNOSIS / ENHANCED OBD II / ACTIVE TEST / SHIFT".
8. According to the display on the tester, perform the "ACTIVE TEST".

HINT:
While driving, the shift position can be changed with the intelligent tester.
Comparing the shift position directed by the ACTIVE TEST with the actual shift position enables the problem to be confirmed (See page AT-35).

Item	Test Details	Diagnostic Note
SHIFT	[Test Details] Operate the shift solenoid valve and set each shift position manually. [Vehicle Condition] Vehicle Speed: Less than 30 mph (50 km/h) [Others] • Press →button: Shift up • Press ←button: Shift down	Possible to check the operation of the shift solenoid valves. HINT: Shifting to the 5th gear is possible only when the vehicle is stationary with the engine idling.

AT

HINT:

- This test can be conducted when the vehicle speed is 30 mph (50 km/h) or less.
- The 4th to 5th up-shifting must be performed with the accelerator pedal released.
- The 5th to 4th down-shifting must be performed with the accelerator pedal released.
- Do not operate the accelerator pedal for at least 2 seconds after shifting and do not shift successively.
- The shift position directed by the ECM is shown in the DATA LIST/ SHIFT display on the intelligent tester.
- Gear positions in the event of a solenoid valve mechanical problem:

Gearshift operated by tester	1st	2nd	3rd	4th	5th
Actual gear position under malfunction	1st	1st	3rd	3rd	N*

N*: Neutral

OK:

Gear position changes in accordance with the tester operation.

NG → **REPAIR OR REPLACE TRANSMISSION VALVE BODY ASSEMBLY**

OK

3	**PERFORM ACTIVE TEST USING INTELLIGENT TESTER (SOLENOID (SLT)) (See page AT-86)**

NG → **REPLACE SHIFT SOLENOID VALVE SLT**

OK

4	**CLEAR DTC AND PERFORM RUNNING TEST**

(a) Clear the DTC, and check for the DTC again after conducting the "MONITOR DRIVE PATTERN FOR ECT TEST" (See page AT-21).

OK:

No DTC

NG → **REPAIR OR REPLACE TRANSMISSION VALVE BODY ASSEMBLY**

OK

END

AT

DTC	P0818	Driveline Disconnect Switch Input Circuit

DESCRIPTION

The ECM detects the signal from the No. 2 transfer indicator switch (Transfer neutral position switch). This DTC indicates that the No. 2 transfer indicator switch remains ON.

DTC No.	DTC Detection Condition	Trouble Area
P0818	No. 2 transfer indicator switch remains ON while vehicle is running under following conditions for 30 seconds. (2 trip detection logic): • Vehicle speed is 15.6 mph (25.1 km/h) or more. • Transfer high and low shift lever position: H	• Short in No. 2 transfer indicator switch (Transfer neutral position switch) circuit • No. 2 transfer indicator switch • Combination meter • ECM

MONITOR DESCRIPTION

The ECM detects whether or not the transfer high and low shift lever is in neutral by monitoring the signal from the No. 2 transfer indicator switch.
If the ECM detects that the transfer high and low shift lever is in neutral under the following conditions, the ECM will conclude that there is a malfunction of the No. 2 transfer indicator switch:

- No. 2 transfer indicator switch indicates that the transfer high and low shift lever is in neutral.
- Transfer high and low shift lever is in the H position.
- The vehicle is traveling at 15.6 mph (25.1 km/h) or more.
- The No. 2 transfer indicator switch has been ON for more than 30 seconds.

If all of the above conditions are detected, the ECM will conclude that there is a malfunction of the No. 2 transfer indicator switch, illuminate the MIL and store the DTC.

MONITOR STRATEGY

Related DTCs	P0818: Transfer neutral position switch/Verify switch cycling
Required sensors/Components	No. 2 transfer indicator switch (Transfer neutral position switch), Vehicle speed sensor
Frequency of operation	Continuous
Duration	30 seconds
MIL operation	2 driving cycles
Sequence of operation	None

AT

TYPICAL ENABLING CONDITIONS

The monitor will run whenever the following DTCs are not present.	None
Vehicle speed	15.6 mph (25.1 km/h) or more
Transfer position	High
Ignition switch	ON
Battery voltage	8 V or more
Starter	OFF

TYPICAL MALFUNCTION THRESHOLDS

Transfer neutral switch signal	ON

WIRING DIAGRAM

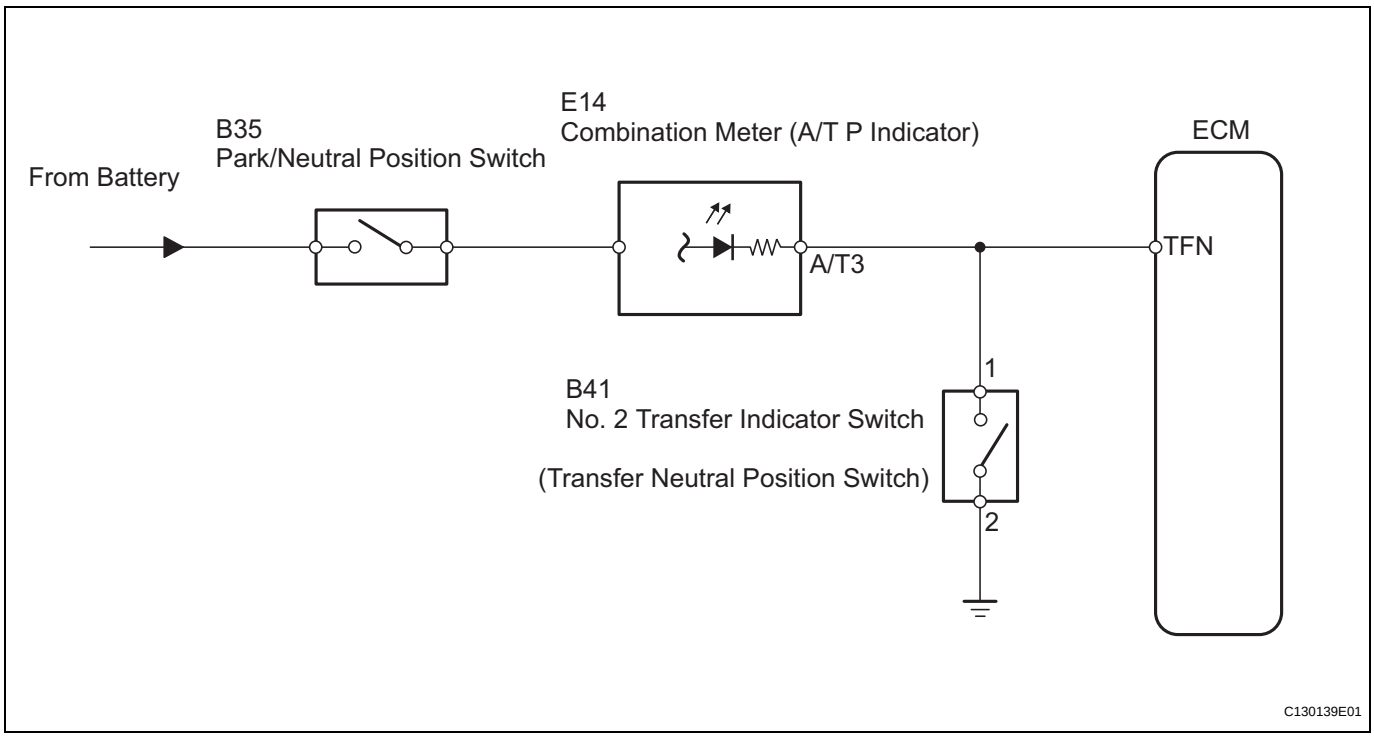

INSPECTION PROCEDURE

1	CHECK HARNESS AND CONNECTOR (NO. 2 TRANSFER INDICATOR SWITCH - BODY GROUND)

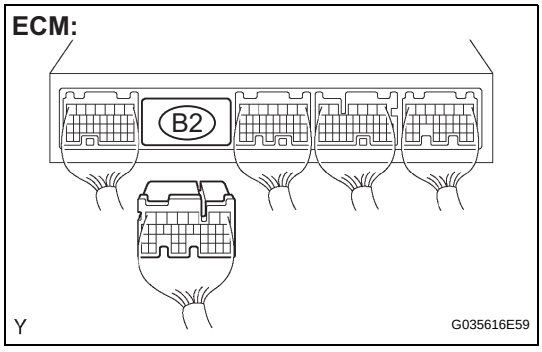

(a) Disconnect the B2 connector of the ECM.
(b) Disconnect the No. 2 transfer indicator switch connector.

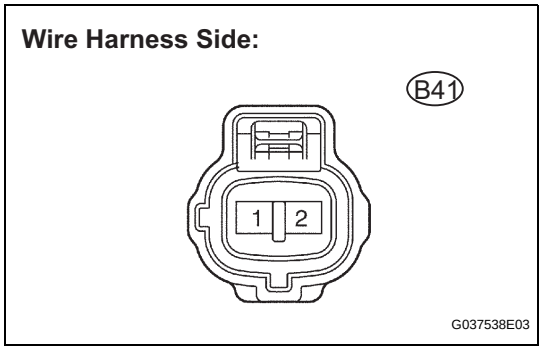

(c) Measure the resistance.
Standard resistance

Transfer Connection	Specified Condition
1 - Body ground	10 kΩ or higher

NG → **Go to step 3**

OK

2	INSPECT NO. 2 TRANSFER INDICATOR SWITCH (TRANSFER NEUTRAL POSITION SWITCH)

No. 2 Transfer Indicator Switch:

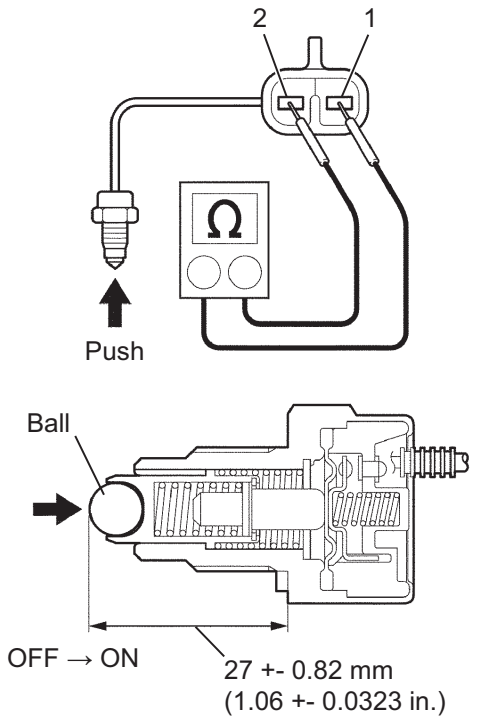

A110992E04

(a) Remove the No. 2 transfer indicator switch.
(b) Measure the resistance of the switch when pushing the ball at the tip of the switch.

Standard resistance

Tester Connection	Switch Condition	Specified Condition
1 - 2	Not pushed	10 kΩ or higher
1 - 2	Pushed	Below 1 Ω

NG → **REPLACE NO. 2 TRANSFER INDICATOR SWITCH (TRANSFER NEUTRAL POSITION SWITCH)**

OK

REPLACE ECM

3	CHECK HARNESS AND CONNECTOR (COMBINATION METER - BODY GROUND)

Wire Harness Side:

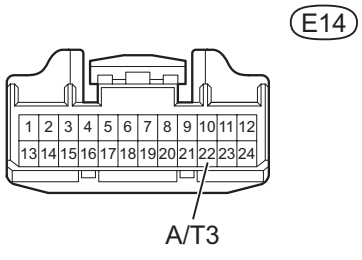

C130136E01

(a) Disconnect the E14 connector of the combination meter.
(b) Measure the resistance of the wire harness side connector.

Standard resistance

Transfer Connection	Specified Condition
22 (A/T3) - Body ground	10 kΩ or higher

NG → **REPAIR OR REPLACE HARNESS OR CONNECTOR**

AT

OK

REPLACE COMBINATION METER

DTC	P0973	Shift Solenoid "A" Control Circuit Low (Shift Solenoid Valve S1)

DTC	P0974	Shift Solenoid "A" Control Circuit High (Shift Solenoid Valve S1)

DESCRIPTION

Shifting from 1st to 5th is performed in combination with the ON and OFF operations of the shift solenoid valves S1, S2, SR, SL1 and SL2 which are controlled by the ECM. If an open or short circuit occurs in any of the shift solenoid valves, the ECM controls the remaining normal shift solenoid valve to allow the vehicle to be driven smoothly (See page AT-35).

DTC No.	DTC Detection Conditions	Trouble Areas
P0973	ECM detects short in solenoid valve S1 circuit 2 times when solenoid valve S1 is operated. (1-trip detection logic)	• Short in shift solenoid valve S1 circuit • Shift solenoid valve S1 • ECM
P0974	ECM detects open in solenoid valve S1 circuit 2 times when solenoid valve S1 is not operated. (1-trip detection logic)	• Open in shift solenoid valve S1 circuit • Shift solenoid valve S1 • ECM

MONITOR DESCRIPTION

These DTCs indicate an open or short in the shift solenoid valve S1 circuit. When there is an open or short circuit in any shift solenoid valve circuits, the ECM detects the problem, illuminates the MIL and stores the DTC. When the shift solenoid valve S1 is ON, if the resistance is 8 Ω or less, the ECM determines that there is a short malfunction in the shift solenoid valve S1 circuit.
When the shift solenoid valve S1 is OFF, if the resistance is 100 kΩ or more, the ECM determines that the shift solenoid valve S1 circuit is open (See page AT-35).

MONITOR STRATEGY

Related DTCs	P0973: Shift solenoid valve S1/Range check (Low resistance) P0974: Shift solenoid valve S1/Range check (High resistance)
Required sensors/Components	Shift solenoid valve S1
Frequency of operation	Continuous
Duration	0.128 seconds or more
MIL operation	Immediate
Sequence of operation	None

AT

TYPICAL ENABLING CONDITIONS

P0973: Range check (Low resistance)

The monitor will run whenever the following DTCs are not present.	None
Shift solenoid valve S1	ON

P0974: Range check (High resistance)

The monitor will run whenever the following DTCs are not present.	None
Shift solenoid valve S1	OFF

TYPICAL MALFUNCTION THRESHOLDS

P0973: Range check (Low resistance)

Shift solenoid valve S1 resistance	8 Ω or less

P0974: Range check (High resistance)

Shift solenoid valve S1 resistance	100 kΩ or more

COMPONENT OPERATING RANGE

Shift solenoid valve S1 resistance	11 to 15 Ω at 20°C (68°F)

WIRING DIAGRAM

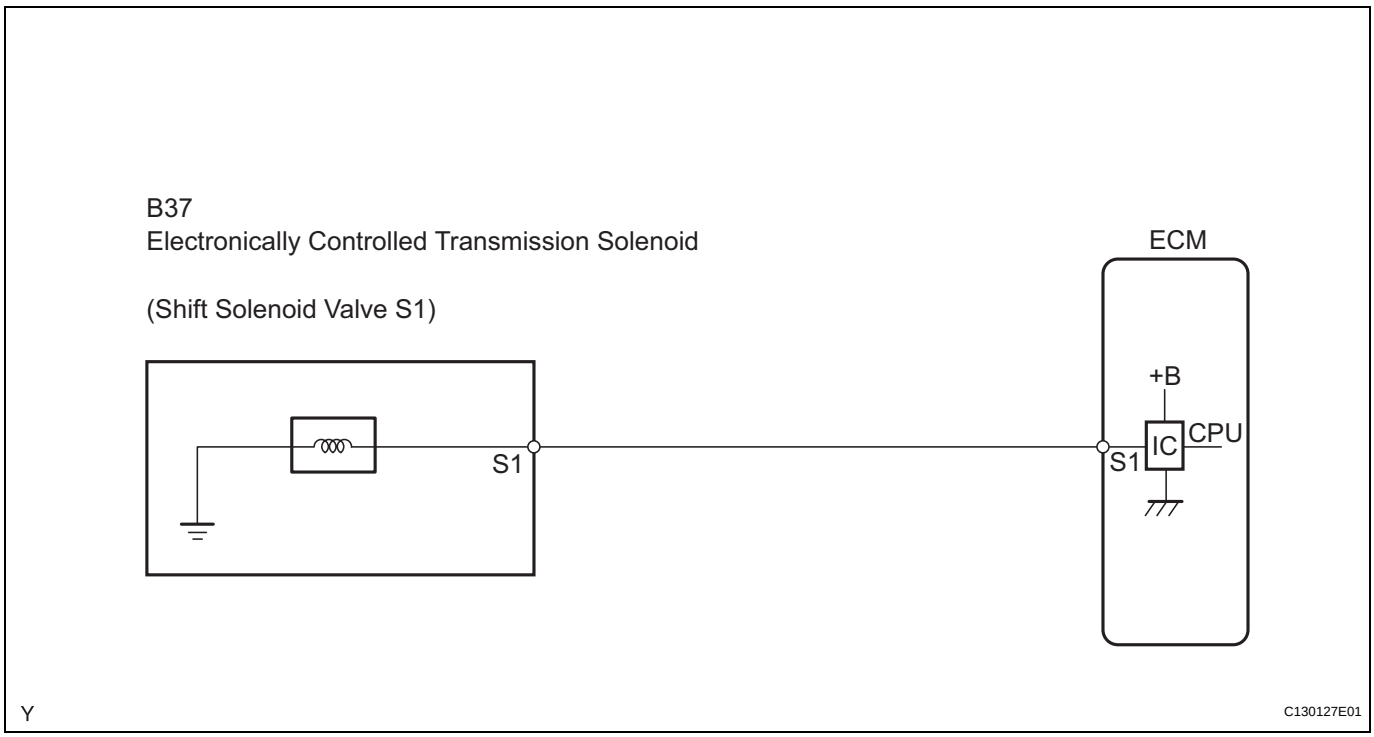

INSPECTION PROCEDURE

AT

HINT:

The shift solenoid valve S1 is turned on/off normally when the shift lever is in the D position:

Gearshift controlled by ECM	1st	2nd	3rd	4th	5th
Shift solenoid valve S1	ON	ON	OFF	OFF	OFF

1	INSPECT TRANSMISSION WIRE (S1)

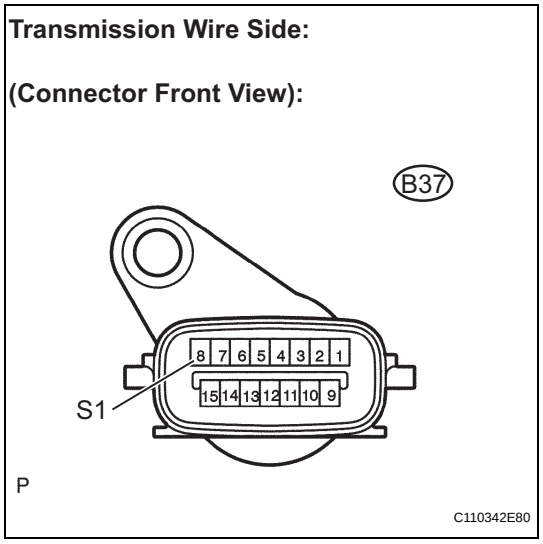

(a) Disconnect the transmission wire connector from the transmission.
(b) Measure the resistance.
Standard resistance

Tester Connection	Specified Condition
8 (S1) - Body ground	11 to 15 Ω at 20°C (68°F)

NG → **Go to step 3**

OK

2	CHECK HARNESS AND CONNECTOR (TRANSMISSION WIRE - ECM)

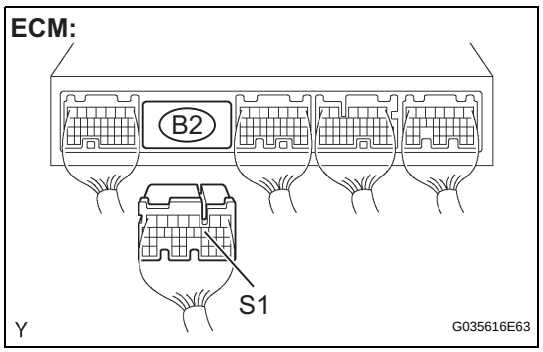

(a) Connect the transmission wire connector to the transmission.
(b) Disconnect the ECM connector.
(c) Measure the resistance.
Standard resistance

Tester Connection	Specified Condition
B2-11 (S1) - Body ground	11 to 15 Ω at 20°C (68°F)

NG → **REPAIR OR REPLACE HARNESS OR CONNECTOR**

OK

REPLACE ECM

3	INSPECT SHIFT SOLENOID VALVE S1

Shift Solenoid Valve S1:

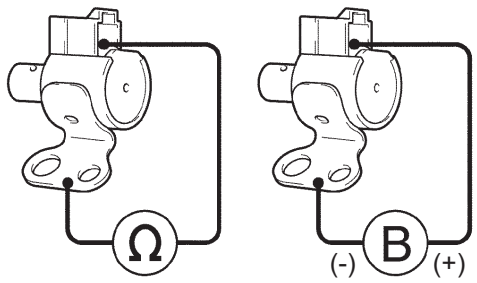

A110986E04

(a) Remove the shift solenoid valve S1.
(b) Measure the resistance.
Standard resistance

Tester Connection	Specified Condition
Solenoid Connector (S1) - Solenoid Body (S1)	11 to 15 Ω at 20°C (68°F)

(c) Connect the positive (+) lead to the terminal of the solenoid connector, and the negative (-) lead to the solenoid body.
OK:
The solenoid makes operating sounds.

NG → **REPLACE SHIFT SOLENOID VALVE S1**

OK

REPAIR OR REPLACE TRANSMISSION WIRE

DTC	P0976	Shift Solenoid "B" Control Circuit Low (Shift Solenoid Valve S2)

DTC	P0977	Shift Solenoid "B" Control Circuit High (Shift Solenoid Valve S2)

DESCRIPTION

Shifting from 1st to 5th is performed in combination with the ON and OFF operations of the shift solenoid valves S1, S2, SR, SL1 and SL2 which are controlled by the ECM. If an open or short circuit occurs in any of the shift solenoid valves, the ECM controls the remaining normal shift solenoid valve to allow the vehicle to be driven smoothly (See page AT-35).

DTC No.	DTC Detection Conditions	Trouble Areas
P0976	ECM detects short in solenoid valve S2 circuit 2 times when solenoid valve S2 is operated. (1-trip detection logic)	• Short in shift solenoid valve S2 circuit • Shift solenoid valve S2 • ECM
P0977	ECM detects open in solenoid valve S2 circuit 2 times when solenoid valve S2 is not operated. (1-trip detection logic)	• Open in shift solenoid valve S2 circuit • Shift solenoid valve S2 • ECM

MONITOR DESCRIPTION

These DTCs indicate an open or short in the shift solenoid valve S2 circuit. When there is an open or short circuit in any shift solenoid valve circuits, the ECM detects the problem, illuminates the MIL and stores the DTC. When the shift solenoid valve S2 is ON, if the resistance is 8 Ω or less, the ECM determines that there is a short malfunction in the shift solenoid valve S2 circuit.
When the shift solenoid valve S2 is OFF, if the resistance is 100 kΩ or more, the ECM determines that the shift solenoid valve S2 circuit is open (See page AT-35).

MONITOR STRATEGY

Related DTCs	P0976: Shift solenoid valve S2/Range check (Low resistance) P0977: Shift solenoid valve S2/Range check (High resistance)
Required sensors/Components	Shift solenoid valve S2
Frequency of operation	Continuous
Duration	0.128 seconds or more
MIL operation	Immediate
Sequence of operation	None

AT

TYPICAL ENABLING CONDITIONS

P0976: Range check (Low resistance)

The monitor will run whenever the following DTCs are not present.	None
Shift solenoid valve S2	ON

P0977: Range check (High resistance)

The monitor will run whenever the following DTCs are not present.	None
Shift solenoid valve S2	OFF

TYPICAL MALFUNCTION THRESHOLDS

P0976: Range check (Low resistance)

Shift solenoid valve S2 resistance	8 Ω or less

P0977: Range check (High resistance)

Shift solenoid valve S2 resistance	100 kΩ or more

COMPONENT OPERATING RANGE

Shift solenoid valve S2 resistance	11 to 15 Ω at 20°C (68°F)

WIRING DIAGRAM

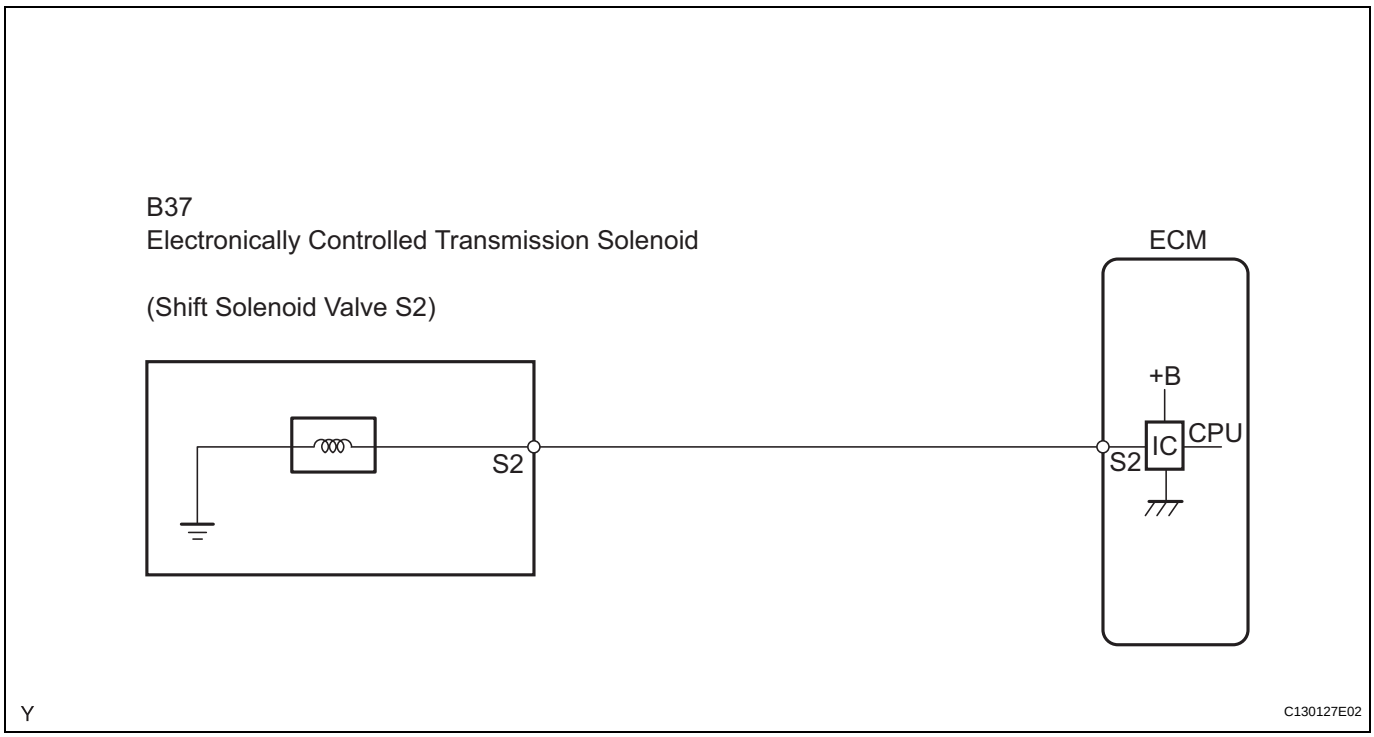

INSPECTION PROCEDURE

AT

HINT:

The shift solenoid valve S2 is turned on/off normally when the shift lever is in the D position:

Gearshift controlled by ECM	1st	2nd	3rd	4th	5th
Shift solenoid valve S2	OFF	ON	ON	OFF	OFF

1	INSPECT TRANSMISSION WIRE (S2)

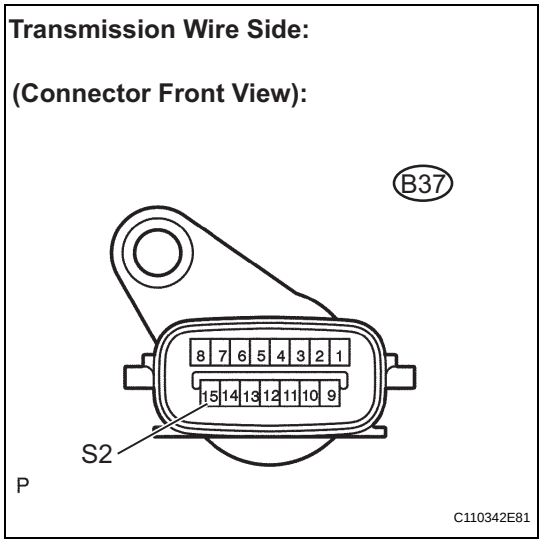

(a) Disconnect the transmission wire connector from the transmission.
(b) Measure the resistance.
Standard resistance

Tester Connection	Specified Condition
15 (S2) - Body ground	11 to 15 Ω at 20°C (68°F)

NG → **Go to step 3**

OK

2	CHECK HARNESS AND CONNECTOR (TRANSMISSION WIRE - ECM)

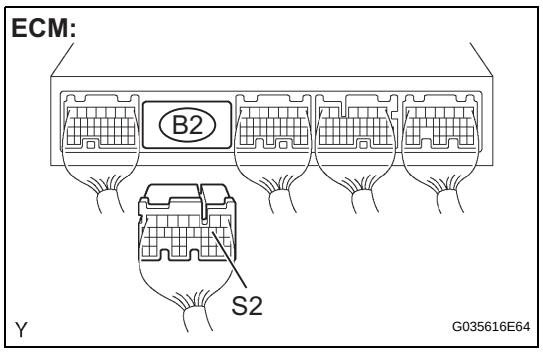

(a) Connect the transmission wire connector to the transmission.
(b) Disconnect the ECM connector.
(c) Measure the resistance.
Standard resistance

Tester Connection	Specified Condition
B2-10 (S2) - Body ground	11 to 15 Ω at 20°C (68°F)

NG → **REPAIR OR REPLACE HARNESS OR CONNECTOR**

OK

REPLACE ECM

AT

3	INSPECT SHIFT SOLENOID VALVE S2

Shift Solenoid Valve S2:

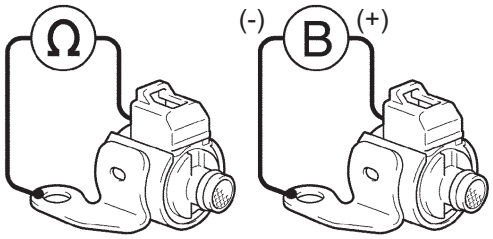

A110987E04

(a) Remove the shift solenoid valve S2.
(b) Measure the resistance.
Standard resistance

Tester Connection	Specified Condition
Solenoid Connector (S2) - Solenoid Body (S2)	11 to 15 Ω at 20°C (68°F)

(c) Connect the positive (+) lead to the terminal of the solenoid connector, and the negative (-) lead to the solenoid body.
OK:
The solenoid makes operating sounds.

NG → **REPLACE SHIFT SOLENOID VALVE S2**

OK

REPAIR OR REPLACE TRANSMISSION WIRE

DTC	P0985	Shift Solenoid "E" Control Circuit Low (Shift Solenoid Valve SR)

DTC	P0986	Shift Solenoid "E" Control Circuit High (Shift Solenoid Valve SR)

DESCRIPTION

Shifting from 1st to 5th is performed in combination with the ON and OFF operations of the shift solenoid valves S1, S2, SR, SL1 and SL2 which are controlled by the ECM. If an open or short circuit occurs in any of the shift solenoid valves, the ECM controls the remaining normal shift solenoid valves to allow the vehicle to be driven smoothly (See page AT-35).

DTC No.	DTC Detection Conditions	Trouble Areas
P0985	ECM detects short in solenoid valve SR circuit 2 times when solenoid valve SR is operated. (1-trip detection logic)	• Short in shift solenoid valve SR circuit • Shift solenoid valve SR • ECM
P0986	ECM detects open in solenoid valve SR circuit 2 times when solenoid valve SR is not operated. (1-trip detection logic)	• Open in shift solenoid valve SR circuit • Shift solenoid valve SR • ECM

MONITOR DESCRIPTION

These DTCs indicate an open or short in the shift solenoid valve SR circuit. When there is an open or short circuit in any shift solenoid valve circuits, the ECM detects the problem, illuminates the MIL and stores the DTC. When the shift solenoid valve SR is ON, if the resistance is 8 Ω or less, the ECM determines that there is a short malfunction in the shift solenoid valve SR circuit.
When the shift solenoid valve SR is OFF, if the resistance is 100 kΩ or more, the ECM determines that the shift solenoid valve SR circuit is open (See page AT-35).

MONITOR STRATEGY

Related DTCs	P0985: Shift solenoid valve SR/Range check (Low resistance) P0986: Shift solenoid valve SR/Range check (High resistance)
Required sensors/Components	Shift solenoid valve SR
Frequency of operation	Continuous
Duration	0.128 seconds
MIL operation	Immediate
Sequence of operation	None

AT

TYPICAL ENABLING CONDITIONS

P0985: Range check (Low resistance)

The monitor will run whenever the following DTCs are not present.	None
Shift solenoid valve SR	ON
Battery voltage	8 V or more
Ignition switch	ON
Starter	OFF

P0986: Range check (High resistance)

The monitor will run whenever the following DTCs are not present.	None
Shift solenoid valve SR	OFF
Battery voltage	8 V or more
Ignition switch	ON
Starter	OFF

TYPICAL MALFUNCTION THRESHOLDS

P0985: Range check (Low resistance)

Shift solenoid valve SR resistance	8 Ω or less

P0986: Range check (High resistance)

Shift solenoid valve SR resistance	100 kΩ or more

COMPONENT OPERATING RANGE

Shift solenoid valve SR resistance	11 to 15 Ω at 20°C (68°F)

WIRING DIAGRAM

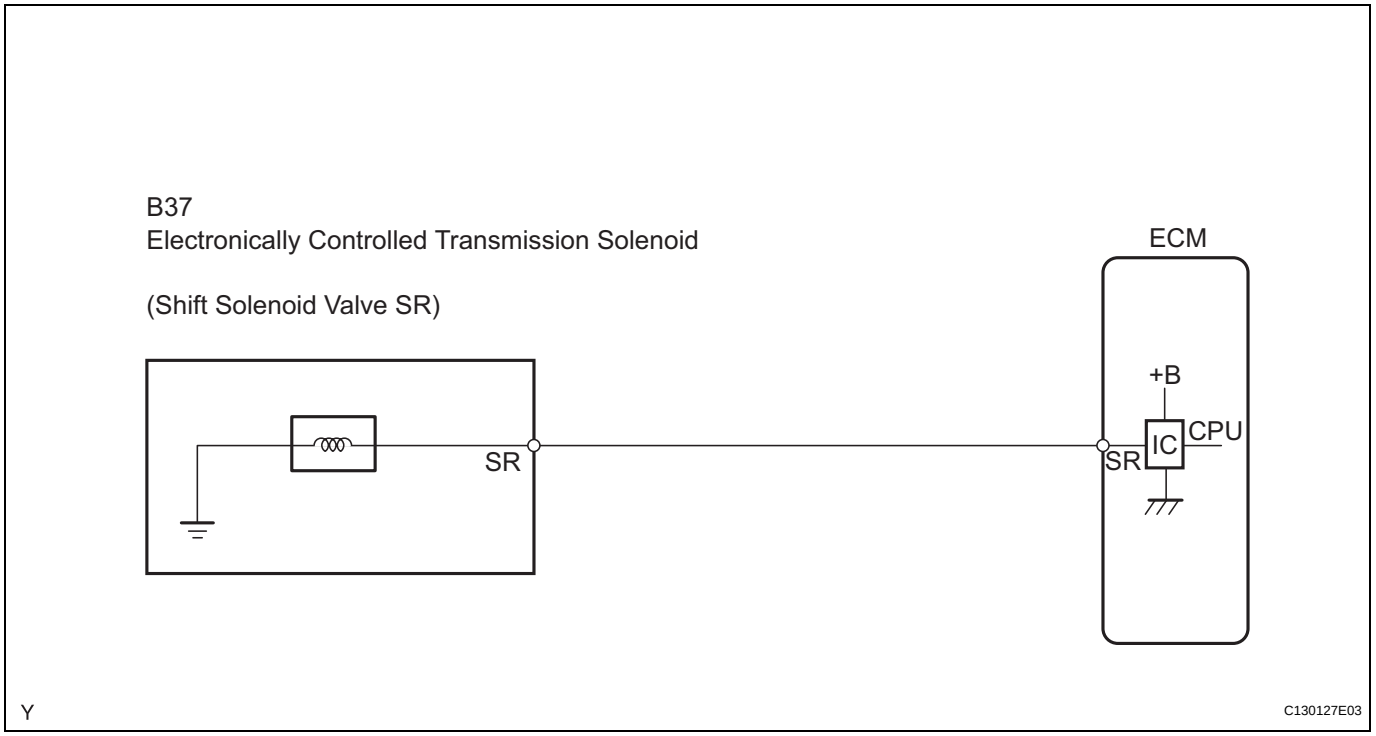

AT

INSPECTION PROCEDURE

HINT:

The shift solenoid valve SR is turned on/off normally when the shift lever is in the D position:

Gearshift controlled by ECM	1st	2nd	3rd	4th	5th
Shift solenoid valve SR	OFF	OFF	OFF	OFF	ON

1	INSPECT TRANSMISSION WIRE (SR)

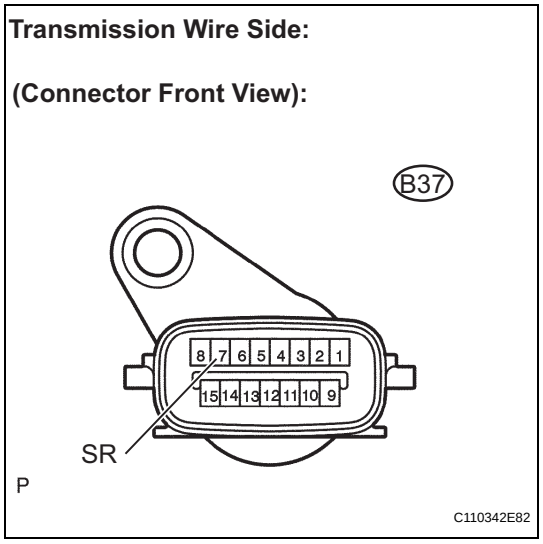

(a) Disconnect the transmission wire connector from the transmission.
(b) Measure the resistance.
Standard resistance

Tester Connection	Specified Condition
7 (SR) - Body ground	11 to 15 Ω at 20°C (68°F)

NG → **Go to step 3**

OK

2	CHECK HARNESS AND CONNECTOR (TRANSMISSION WIRE - ECM)

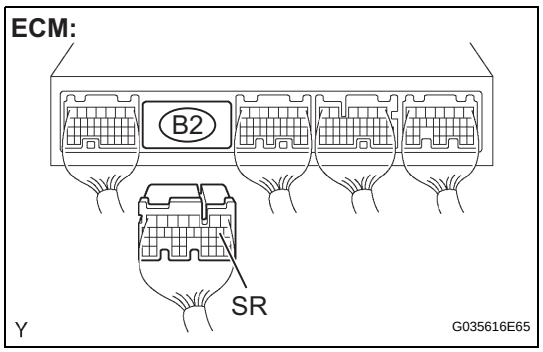

(a) Connect the transmission wire connector to the transmission.
(b) Disconnect the ECM connector.
(c) Measure the resistance.
Standard resistance

Tester Connection	Specified Condition
B2-9 (SR) - Body ground	11 to 15 Ω at 20°C (68°F)

NG → **REPAIR OR REPLACE HARNESS OR CONNECTOR**

OK

REPLACE ECM

3	INSPECT SHIFT SOLENOID VALVE SR

Shift Solenoid Valve SR:

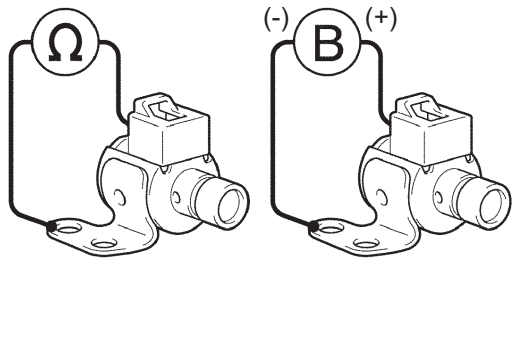

A110988E05

(a) Remove the shift solenoid valve SR.
(b) Measure the resistance.
Standard resistance

Tester Connection	Specified Condition
Solenoid Connector (SR) - Solenoid Body (SR)	11 to 15 Ω at 20°C (68°F)

(c) Connect the positive (+) lead to the terminal of the solenoid connector, and the negative (-) lead to the solenoid body.
OK:
The solenoid makes operating sounds.

NG → **REPLACE SHIFT SOLENOID VALVE SR**

OK

REPAIR OR REPLACE TRANSMISSION WIRE

DTC	P2714	Pressure Control Solenoid "D" Performance (Shift Solenoid Valve SLT)

DESCRIPTION

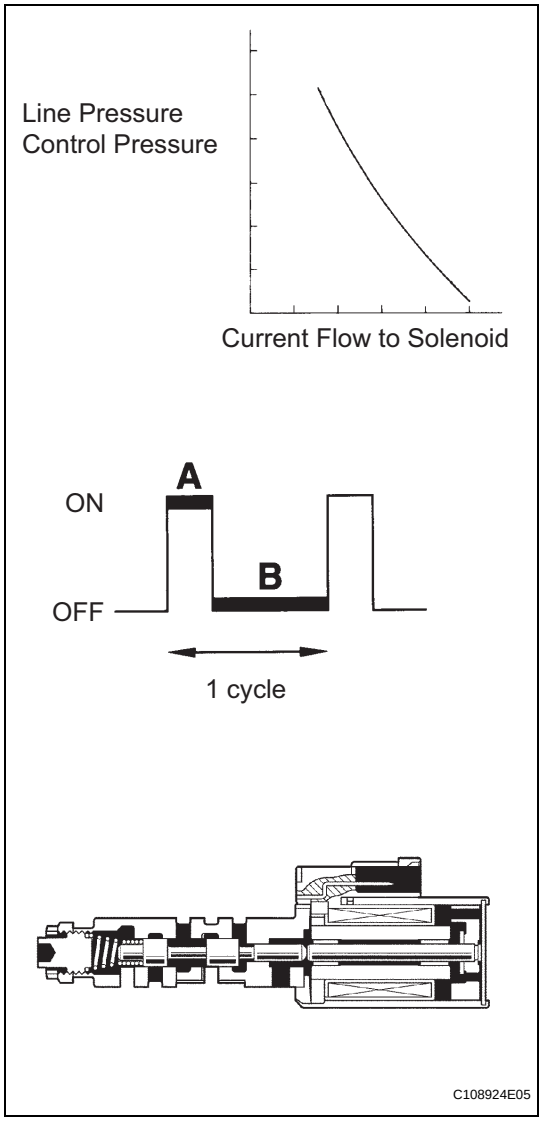

The linear solenoid valve (SLT) controls the transmission line pressure for smooth transmission operation based on signals from the throttle position sensor and the vehicle speed sensor. The ECM adjusts the duty ratio* of the SLT solenoid valve output signal to control the hydraulic line pressure coming from the primary regulator valve. Appropriate line pressure assures smooth shifting with varying engine outputs.
*: The duty ratio is the ratio of the continuity to non-continuity in one cycle.
For example, if A is the period of continuity in one cycle, and B is the period of non-continuity, then Duty Ratio=A/(A+B) x 100 (%)

DTC No.	DTC Detection Condition	Trouble Area
P2714	ECM detects malfunctions on SLT (ON side) according to the revolution difference between the turbine and the output shaft, and also by monitoring the oil pressure. (2 trip detection logic)	• Shift solenoid valve SLT remains open or closed • Shift solenoid valve S1, S2, SR, SL1 or SL2 remains open or closed • Valve body is blocked • Automatic transmission (clutch, brake or gear, etc.)

MONITOR DESCRIPTION

The ECM calculates the amount of heat absorbed by the friction material based on the difference in revolution (clutch slippage) between the turbine and output shaft. The ECM turns on the MIL and outputs this DTC when the amount of heat absorption exceeds the specified value.
When the shift solenoid valve SLT remains on, the oil pressure goes down and the clutch engagement force decreases.
NOTE: If driving continues under these conditions, the clutch will burn out and the vehicle will no longer be drivable.

MONITOR STRATEGY

Related DTCs	P2714 : Shift solenoid valve SLT/ON malfunction
Required sensors/Components (Main)	Shift solenoid valve SLT
Required sensors/Components (Related)	Valve body, ATF temperature sensor, Speed sensor (NT), Speed sensor (SP2)
Frequency of operation	Continuous
Duration	Immediate
MIL operation	2 driving cycles
Sequence of operation	None

TYPICAL ENABLING CONDITIONS

The monitor will run whenever the following DTCs are not present.	None
Turbine speed sensor (NT) circuit	No circuit malfunction
Output speed sensor (SP2) circuit	No circuit malfunction
Transmission fluid temperature sensor "A" circuit	No circuit malfunction
Shift solenoid "A" (S1) circuit	No circuit malfunction
Shift solenoid "B" (S2) circuit	No circuit malfunction
Shift solenoid "E" (SR) circuit	No circuit malfunction
Pressure control solenoid "A" (SL1) circuit	No circuit malfunction
Pressure control solenoid "B" (SL2) circuit	No circuit malfunction
Pressure control solenoid "D" (SLT) circuit	No circuit malfunction
ECT (Engine Coolant Temperature) sensor circuit	No circuit malfunction
Knock sensor circuit	No circuit malfunction
ETCS (Electronic Throttle Control System)	System not down
Transmission shift position	"D"
ECT	40°C (104°F) or more
Spark advance from max. retard timing by knock sensor control	0° CA or more
Engine	Starting
Transfer range	"High"*1
ATF temperature	10°C (50°F) or more

*1: Following conditions are met

Vehicle speed sensor "A" circuit	No circuit malfunction
Output speed sensor circuit	No circuit malfunction
Transfer output speed	143 rpm or more
Transfer input speed/Transfer output speed	0.9 to 1.1

TYPICAL MALFUNCTION THRESHOLDS

Summation of C1 clutch heat generations = SUM (Turbine speed - Output speed x Temporary gear ratio)	Specified value

AT

INSPECTION PROCEDURE

HINT:
Performing the ACTIVE TEST using the intelligent tester allows components, such as the relay, VSV, and actuator, to be operated without removing any parts. Performing the ACTIVE TEST as a first step of troubleshooting is one method of shortening labor time.
It is possible to display the DATA LIST during the ACTIVE TEST.

1. Warm up the engine.
2. Turn the ignition switch off.
3. Connect the intelligent tester together with the CAN VIM (Controller Area Network Vehicle Interface Module) to the DLC3.
4. Turn the ignition switch to the ON position.
5. Push the "ON" button of the tester.
6. Clear the DTC.
7. Select the items "DIAGNOSIS / ENHANCED OBD II / ACTIVE TEST / SOLENOID (SLT)".
8. According to the display on the tester, perform the "ACTIVE TEST".

Item	Test Details	Diagnostic Note
SOLENOID (SLT) *	[Test Details] Operate the shift solenoid SLT to raise the line pressure. [Vehicle Condition] • Vehicle Stopped • IDL: ON [HINT] OFF: Line pressure up (When the active test of "SOLENOID (SLT)" is performed the ECM commands the SLT solenoid to turn off). ON: No action (normal operation)	-

*: "SOLENOID (SLT)" in the ACTIVE TEST is performed to check the line pressure changes by connecting SST to the automatic transmission, which is used in the HYDRAULIC TEST (See page AT-18) as well.

HINT:

- The pressure values in ACTIVE TEST and HYDRAULIC TEST are different from each other.
- Normally, the line pressure detected in the ACTIVE TEST is approximately half of the value detected in the HYDRAULIC TEST's stall test.

AT

1	CHECK ANY OTHER DTCS OUTPUT (IN ADDITION TO DTC P2714)

(a) Connect the intelligent tester to the DLC3.
(b) Turn the ignition switch to the ON position and push the intelligent tester main switch ON.
(c) Select the items "DIAGNOSIS / ENHANCED OBD II / DTC INFO / CURRENT CODES".
(d) Read the DTCs using the intelligent tester.

Result:

Display (DTC Output)	Proceed to
Only "P2714" is output	A
"P2714" and other DTCs	B

HINT:
If any codes besides "P2714" are output, perform troubleshooting for those DTCs first.

B → GO TO DTC CHART

A

2	**PERFORM ACTIVE TEST USING INTELLIGENT TESTER (SOLENOID (SLT)) (See page AT-86)**

NG → **Go to step 9**

OK

3	**PERFORM ACTIVE TEST USING INTELLIGENT TESTER (SHIFT)**

(a) Connect the intelligent tester to the DLC3.
(b) Turn the ignition switch ON.
(c) Turn the intelligent tester ON.
(d) Clear the DTC (See page AT-33).
(e) Enter the following menus: DIAGNOSIS / ENHANCED OBD II / ACTIVE TEST.
(f) Follow the instructions on the tester and perform the ACTIVE TEST.

HINT:
While driving, the shift position can be forcibly changed with the intelligent tester.

Item	Test Details	Diagnostic Note
SHIFT	[Test Details] Operate the shift solenoid valve and set each shift position. [Vehicle Condition] • IDL: ON • Less than 30 mph (50 km/h) [Other information] • Press "→" button: Shift up • Press "←" button: Shift down	Possible to check the operation of the shift solenoid valves. HINT: Shifting to the 5th gear is possible only when the vehicle is stationary with the engine idling.

AT

HINT:
- This test can be conducted when the vehicle speed is 30 mph (50 km/h) or less.
- The 4th to 5th up-shift must be performed with the accelerator pedal released.
- The 5th to 4th down-shift must be performed with the accelerator pedal released.
- Do not operate the accelerator pedal for at least 2 seconds after shifting and do not shift successively.
- The shift position commanded by the ECM is shown in the DATA LIST (SHIFT) display on the intelligent tester.

(g) Compare the ECM gear shift command and the actual gear position.

ECM gear shift command			1st	2nd	3rd	4th	5th	Proceed to
Actual gear position under malfunction	Shift solenoid S1	Stuck ON	1st	2nd	2nd	1st	N*1	A
		Stuck OFF	4th	3rd	3rd	4th	5th	
	Shift solenoid S2	Stuck ON*2	2nd	2nd	3rd	3rd	N*1	B
		Stuck OFF*3	1st	1st	4th	4th	5th	
	Shift solenoid SL2	Stuck ON	1st	2nd	3rd	4th	N*1	C
		Stuck OFF	1st	2nd	3rd	4th	5th	
	Shift solenoid SR	Stuck ON*4	1st	2nd	3rd	4th	5th	D
		Stuck OFF*5	1st	2nd	3rd	4th	4th	

HINT:

- *1: Neutral
- *2: When shift solenoid S2 is stuck ON, the vehicle cannot drive in reverse.
- *3: When shift solenoid S2 is stuck OFF, the 4th to 5th up-shift will have a large shift shock. Also the 5th to 4th down-shift will have time lag.
- *4: Stuck ON condition can be determined by checking if shift shock has increased excessively.
- *5: When shift solenoid SR is stuck OFF, moving the shift lever from N to D will cause a large shift shock.
- Gear shift can be determined by paying attention to changes in rpm.

B → **Go to step 5**

C → **Go to step 6**

D → **Go to step 7**

OK → **Go to step 9**

AT

A

4 **INSPECT SHIFT SOLENOID VALVE S1 (See page AT-120)**

OK → **Go to step 10**

NG

REPLACE SHIFT SOLENOID VALVE S1

5 **INSPECT SHIFT SOLENOID VALVE S2 (See page AT-124)**

OK → **Go to step 10**

NG

REPLACE SHIFT SOLENOID VALVE S2

6	INSPECT SHIFT SOLENOID VALVE SL2 (See page AT-106)

OK → Go to step 10

NG

REPLACE SHIFT SOLENOID VALVE SL2

7	INSPECT SHIFT SOLENOID VALVE SR (See page AT-128)

NG → REPLACE SHIFT SOLENOID VALVE SR

OK

8	INSPECT SHIFT SOLENOID VALVE SL1 (See page AT-81)

OK → Go to step 10

NG

REPLACE SHIFT SOLENOID VALVE SL1

9	INSPECT SHIFT SOLENOID VALVE SLT

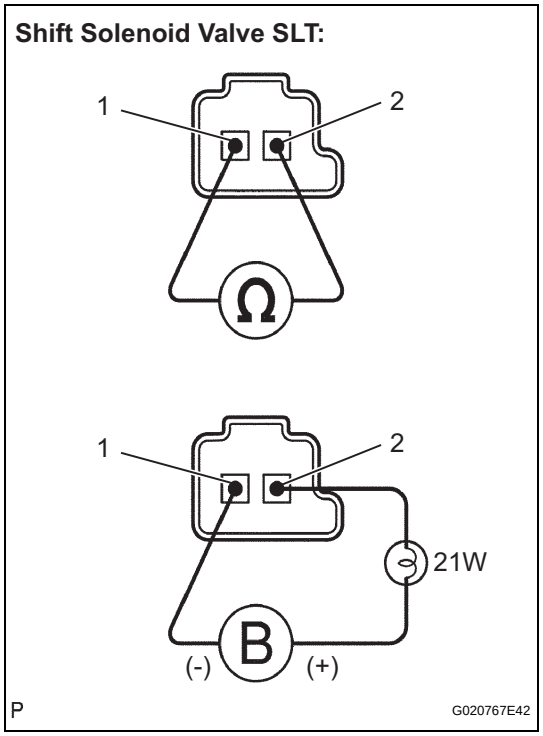

(a) Remove the shift solenoid valve SLT.
(b) Measure the resistance.
Standard resistance

Tester Connection	Specified Condition
1 - 2	5.0 to 5.6 Ω at 20°C (68°F)

(c) Connect the positive (+) lead with a 21 W bulb to terminal 2 and the negative (-) lead to terminal 1 of the solenoid valve connector, then check the movement of the valve.
OK:
The solenoid makes operating sounds.

NG → **REPLACE SHIFT SOLENOID VALVE SLT**

OK

10	INSPECT TRANSMISSION VALVE BODY ASSEMBLY (See chapter 2 in the problem symptoms table)

OK:
There are no foreign objects on any valves and they operate smoothly.

NG → **REPAIR OR REPLACE TRANSMISSION VALVE BODY ASSEMBLY**

OK

11	INSPECT TORQUE CONVERTER CLUTCH ASSEMBLY

(a) Check the torque converter clutch assembly (See page AT-186).
OK:
The torque converter clutch operates normally.

NG → **REPLACE TORQUE CONVERTER CLUTCH ASSEMBLY**

OK

REPAIR OR REPLACE AUTOMATIC TRANSMISSION ASSEMBLY

AT

DTC	P2716	Pressure Control Solenoid "D" Electrical (Shift Solenoid Valve SLT)

DESCRIPTION

Refer to DTC P2714 (See page AT-119).

DTC No.	DTC Detection Conditions	Trouble Areas
P2716	Open or short is detected in shift solenoid valve SLT circuit for 1 second or more while driving (1-trip detection logic)	• Open or short in shift solenoid valve SLT circuit • Shift solenoid valve SLT • ECM

MONITOR DESCRIPTION

When an open or short is detected in the linear solenoid valve (SLT) circuit, the ECM interprets this as a fault.
The ECM turns on the MIL and stores the DTC.

MONITOR STRATEGY

Related DTCs	P2716: Shift solenoid valve SLT/Range check
Required sensors/Components	Shift solenoid valve SLT
Frequency of operation	Continuous
Duration	Condition (A) and (B): 1 second
MIL operation	Immediate
Sequence of operation	None

TYPICAL ENABLING CONDITIONS

The following conditions are common to Condition (A) and (B).

The monitor will run whenever the following DTCs are not present.	None
Ignition switch	ON
Starter	OFF

Condition (A)

Solenoid current cut status	Not cut
Battery voltage	11 V or more

Condition (B)

Battery voltage	8 V or more

TYPICAL MALFUNCTION THRESHOLDS

Either of the following conditions is met: Condition (A) or (B)

Condition (A)

Solenoid status (SLT) from Hybrid IC	Fail

Condition (B)

Hybrid IC status	Fail

COMPONENT OPERATING RANGE

Shift solenoid valve SLT	Resistance: 5.0 to 5.6 Ω at 20°C (68°F)

WIRING DIAGRAM

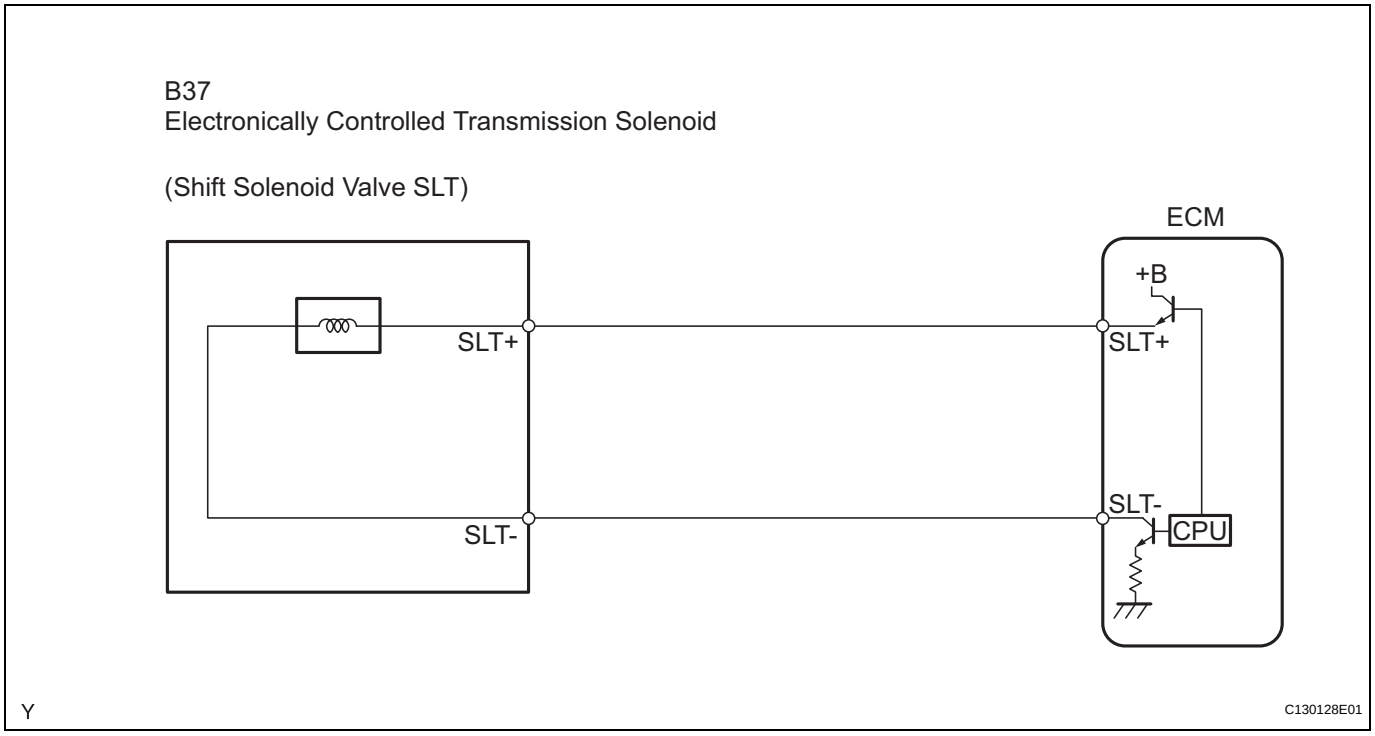

INSPECTION PROCEDURE

1	INSPECT TRANSMISSION WIRE (SLT)

Transmission Wire Side:

(Connector Front View):

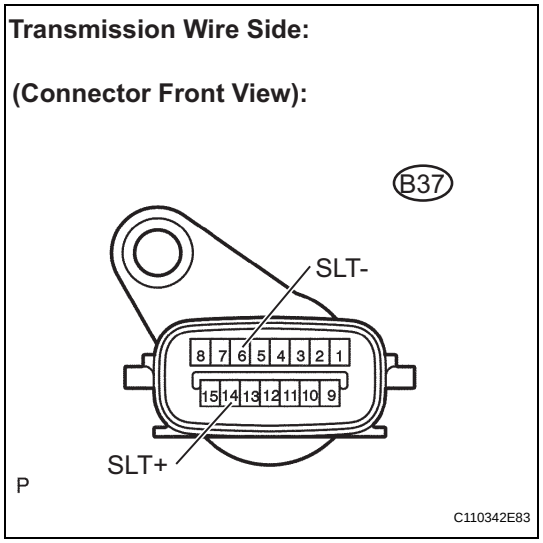

(a) Disconnect the transmission wire connector from the transmission.

(b) Measure the resistance.

Standard resistance

Tester Connection	Specified Condition
14 (SLT+) - 6 (SLT-)	5.0 to 5.6 Ω at 20°C (68°F)

(c) Measure the resistance.

Standard resistance (Check for short)

Tester Connection	Specified Condition
14 (SLT+) - Body ground	10 kΩ or higher
6 (SLT-) - Body ground	10 kΩ or higher

NG → **Go to step 3**

OK

AT

2 CHECK HARNESS AND CONNECTOR (TRANSMISSION WIRE - ECM)

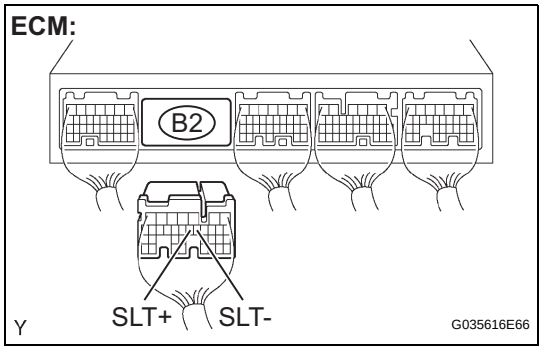

(a) Connect the transmission wire connector to the transmission.
(b) Disconnect the ECM connector.
(c) Measure the resistance.
Standard resistance

Tester Connection	Specified Condition
B2-13 (SLT+) - B2-12 (SLT-)	5.0 to 5.6 Ω at 20°C (68°F)

(d) Measure the resistance.
Standard resistance (Check for short)

Tester Connection	Specified Condition
B2-13 (SLT+) - Body ground	10 kΩ or higher
B2-12 (SLT-) - Body ground	10 kΩ or higher

NG → **REPAIR OR REPLACE HARNESS OR CONNECTOR**

OK

REPLACE ECM

3 INSPECT SHIFT SOLENOID VALVE SLT

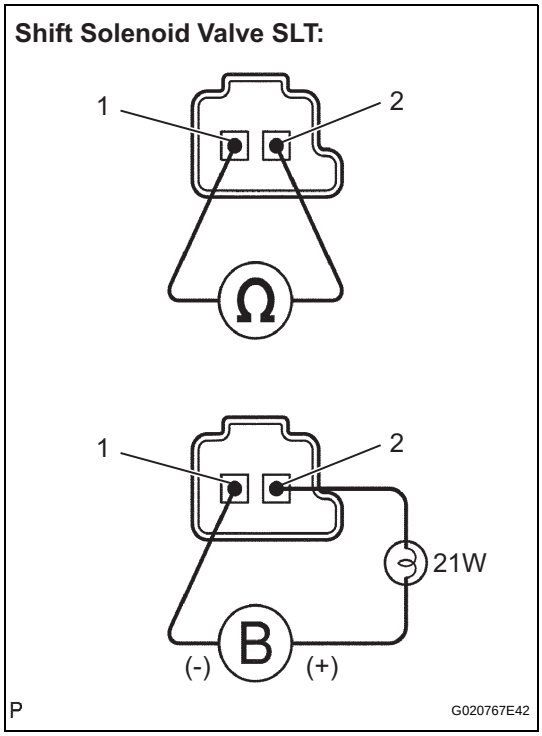

(a) Remove the shift solenoid valve SLT.
(b) Measure the resistance.
Standard resistance

Tester Connection	Specified Condition
1 - 2	5.0 to 5.6 Ω at 20°C (68°F)

(c) Connect the positive (+) lead with a 21 W bulb to terminal 2 and the negative (-) lead to terminal 1 of the solenoid valve connector, then check the movement of the valve.
OK:
The solenoid makes operating sounds.

NG → **REPLACE SHIFT SOLENOID VALVE SLT**

AT

OK

REPAIR OR REPLACE TRANSMISSION WIRE

DTC	P2740	Transmission Fluid Temperature Sensor "B" Circuit

DTC	P2742	Transmission Fluid Temperature Sensor "B" Circuit Low Input

DTC	P2743	Transmission Fluid Temperature Sensor "B" Circuit High Input

DESCRIPTION

The No. 2 Automatic Transmission Fluid (ATF) temperature sensor is on the transmission, just before the oil cooler inlet pipeline.

If the ECM detects an abnormally high ATF temperature through this sensor, it illuminates the warning light to indicate the problem to the driver.

HINT:

- The ATF temperature is liable to increase under vehicle conditions such as towing, climbing hills and in traffic.
- If there is a short malfunction in the No. 2 ATF temperature sensor, the ECM receives signals from the sensor, which indicate that the ATF temperature is 150°C (302°F) or more.

The symptoms and recovery conditions, when the sensor is normal or there is a short malfunction in the sensor, are as shown in the table below.

No.2 ATF Temperature Sensor Status	Detection Condition	Symptom	Recovery Condition
Sensor is normal	• ATF temperature more than 150°C (302°F)	• ATF temperature warning light remains on	• ATF temperature less than 135°C (275°F) *2
	• ATF temperature more than 130°C (266°F)	• Shift point too high	• ATF temperature less than 110°C (230°F)
	When the conditions (a) and (b) are satisfied continually (a) ATF temperature more than130°C (266°F) (b) Engine coolant temperature more than 95°C (203°F)	• Lock-up in 3rd gear *1	• ATF temperature less than 110°C (230°F) *2 and engine coolant temperature less than 95°C (203°F)
Sensor is short	• Any conditions	• ATF temperature warning light remains on • Shift point too high	• Symptoms still occur
	• Engine coolant temperature more than 95°C (203°F)	• Lock-up in 3rd gear *1	• Symptom still occurs

HINT:

*1: When the ATF temperature is normal, the transmission locks up in 5th gear with the shift lever in the D position and in 4th gear with the shift lever in the 4th position.

*2: When the ATF temperature is in the normal range, it decreases to less than 135°C (275°F) within 5 minutes of the shift lever being moved to the P or N position, while idling.

DTC No.	DTC Detection Conditions	Trouble Areas
P2740	Conditions (a) and (b) are detected momentarily within 0.5 seconds when neither P2742 nor P2743 is detected. (1-trip detection logic) (a) No. 2 ATF temperature sensor resistance (voltage) is less than 25 Ω (0.046 V). (b) No. 2 ATF temperature sensor resistance (voltage) is more than 156 kΩ (4.915 V). HINT: Within 0.5 seconds the malfunction changes from (a) to (b) or (b) to (a).	• Open or short in No.2 ATF temperature sensor circuit • No.2 ATF temperature sensor • ECM

DTC No.	DTC Detection Conditions	Trouble Areas
P2742	No. 2 ATF temperature sensor resistance (voltage) is less than 25 Ω (0.046 V) for 0.5 seconds or more (1-trip detection logic)	• Short in No.2 ATF temperature sensor circuit • No.2 ATF temperature sensor • ECM
P2743	No. 2 ATF temperature sensor resistance (voltage) is more than 156 kΩ (4.915 V) for 0.5 seconds or more 15 minutes or more after starting engine (1-tip detection logic)	• Open in No.2 ATF temperature sensor circuit • No.2 ATF temperature sensor • ECM

MONITOR DESCRIPTION

These DTCs indicate an open or short in the No. 2 Automatic Transmission Fluid (ATF) temperature sensor circuit. The No. 2 ATF temperature sensor converts the ATF temperature to an electrical resistance value. Based on the resistance, the ECM determines the ATF temperature, and detects any open or short malfunctions in the No. 2 ATF temperature sensor circuit. If the resistance (voltage) of the No. 2 ATF temperature sensor is less than 25 Ω (0.046 V) or more than 156 kΩ (4.915 V), the ECM interprets this as a fault in the No. 2 ATF temperature sensor or its wiring. The ECM turns on the MIL and stores a DTC.

MONITOR STRATEGY

Related DTCs	P2740 : No. 2 ATF temperature sensor/Range check (Fluttering) P2742 : No. 2 ATF temperature sensor/Range check (Low voltage) P2743 : No. 2 ATF temperature sensor/Range check (High voltage)
Required sensors/Components	No. 2 ATF temperature sensor
Frequency of operation	Continuous
Duration	0.5 seconds
MIL operation	Immediate
Sequence of operation	None

TYPICAL ENABLING CONDITIONS

P2740: Range check (Fluttering)

The monitor will run whenever the following DTCs are not present.	None
The typical enabling condition is not available.	-

P2742: Range check (Low voltage)

The monitor will run whenever the following DTCs are not present.	None
The typical enabling condition is not available.	-

P2743: Range check (High voltage)

The monitor will run whenever the following DTCs are not present.	None
Time after engine start	15 minutes or more

TYPICAL MALFUNCTION THRESHOLDS

P2740: Range check (Fluttering)

No. 2 ATF temperature sensor voltage	Less than 0.046 V or More than 4.915 V

P2742: Range check (Low voltage)

No. 2 ATF temperature sensor voltage	Less than 0.046 V

P2743: Range check (High voltage)

No. 2 ATF temperature sensor voltage	More than 4.915 V

COMPONENT OPERATING RANGE

ATF temperature sensor	Atmospheric temperature up to approximately 130°C (266°F)

WIRING DIAGRAM

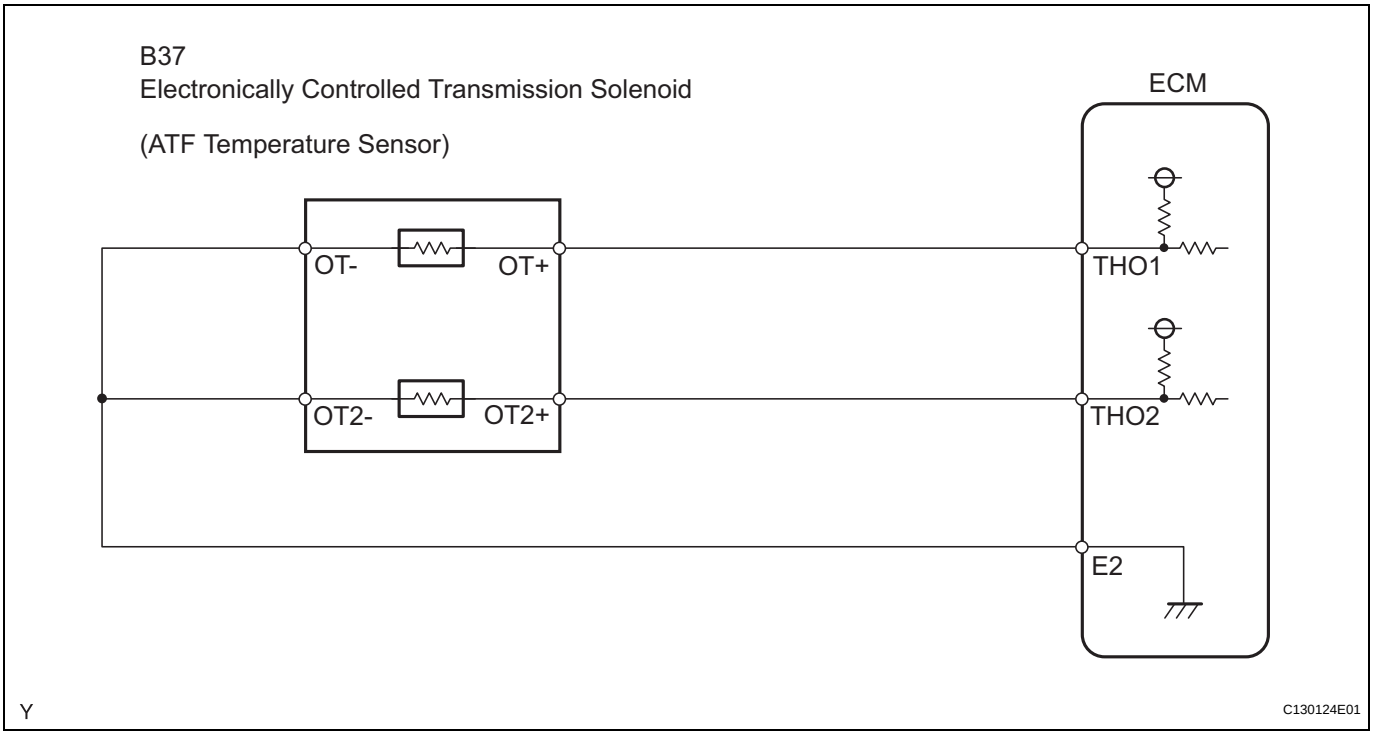

INSPECTION PROCEDURE

HINT:

According to the DATA LIST displayed on the intelligent tester, you can read the values of components, such as the switches, sensors, actuators, without removing any parts. Reading the DATA LIST as a first step of troubleshooting is one method of shortening labor time.

AT

NOTICE:

In the table below, the values listed under "Normal Condition" are for reference only. Do not depend solely on these reference values when judging whether a part is faulty or not.

1. Warm up the engine.
2. Turn the ignition switch off.
3. Connect the intelligent tester together with the CAN VIM (Controller Area Network Vehicle Interface Module) to the DLC3.
4. Turn the ignition switch to the ON position.
5. Push the "ON" button of the tester.
6. Select the items "DIAGNOSIS / ENHANCED OBD II / DATA LIST" / A/T.
7. According to the display on the tester, read the "DATA LIST".

Item	Measurement Item/ Range (display)	Normal Condition
AT OIL TEMP2	No. 2 ATF Temperature Sensor Value/ min.: -40°C (-40°F) max.: 215°C (419°F)	• After Stall Test: Approximately 80°C (176°F) • Equal to ambient temperature during cold soak

HINT:

When DTC P2742 is output and intelligent tester reading is 150°C (302°F) or more, there is a short circuit.
When DTC P2743 is output and intelligent tester reading is -40°C (-40°F), there is an open circuit.

Measure the resistance between terminal THO2 and the body ground.

Temperature Displayed	Malfunction
-40°C (-40°F)	Open circuit
150°C (302°F) or more	Short circuit

1 INSPECT TRANSMISSION WIRE (NO.2 ATF TEMPERATURE SENSOR)

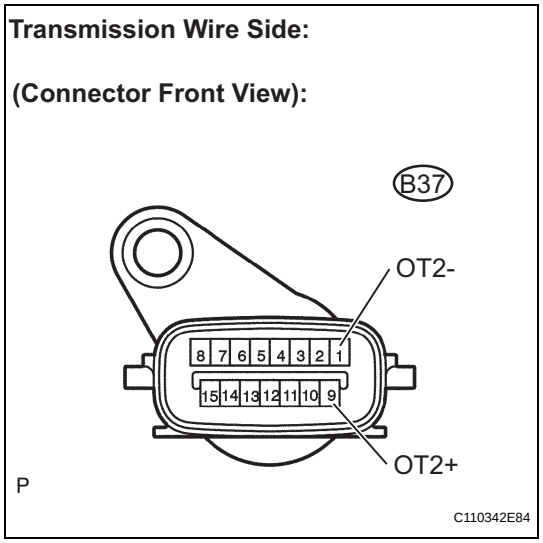

(a) Disconnect the transmission wire connector from the transmission.
(b) Measure the resistance.
Standard resistance

Tester Connection	Specified Condition
1 (OT2-) - 9 (OT2+)	79 Ω to 156 kΩ

(c) Measure the resistance.
Standard resistance (Check for short)

Tester Connection	Specified Condition
1 (OT2-) - Body ground	10 kΩ or higher
9 (OT2+) - Body ground	10 kΩ or higher

HINT:
If the resistance is outside the specified range at either of the ATF temperatures shown in the table below, the driveability of the vehicle may decrease.

ATF Temperature	Specified Condition
20°C (68°F)	3 to 5 kΩ
110°C (230°F)	0.22 to 0.28 kΩ

NG → **REPAIR OR REPLACE TRANSMISSION WIRE**

OK

AT

2 CHECK HARNESS AND CONNECTOR (TRANSMISSION WIRE - ECM)

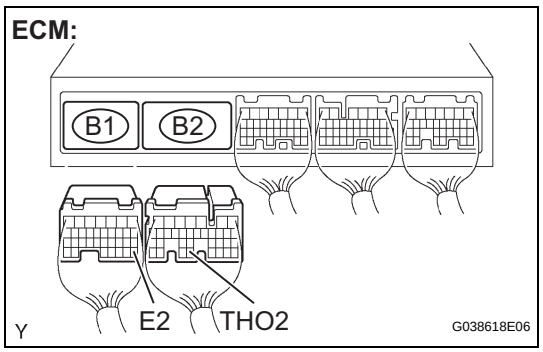

(a) Connect the transmission wire connector to the transmission.
(b) Disconnect the ECM connectors.
(c) Measure the resistance.
Standard resistance

Tester Connection	Specified Condition
B2-32 (THO2) - B1-28 (E2)	79 Ω to 156 kΩ

(d) Measure the resistance.
Standard resistance (Check for short)

Tester Connection	Specified Condition
B2-32 (THO2) - Body ground	10 kΩ or higher
B1-28 (E2) - Body ground	10 kΩ or higher

NG → **REPAIR OR REPLACE HARNESS OR CONNECTOR**

OK

REPLACE ECM

DTC	P2757	Torque Converter Clutch Pressure Control Solenoid Performance (Shift Solenoid Valve SLU)

DESCRIPTION

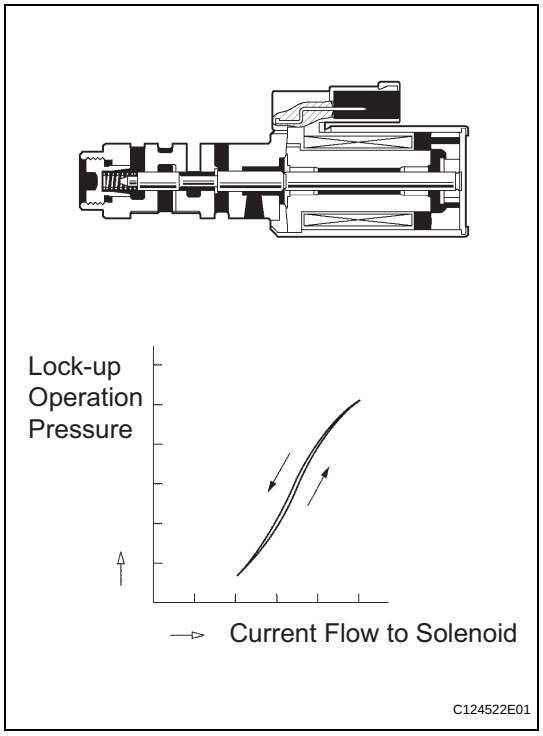

The ECM uses the signals from the throttle position sensor, mass air flow meter, turbine (input) speed sensor, output speed sensor and crankshaft position sensor, to monitor the engagement condition of the lock-up clutch.
Then the ECM compares the engagement condition of the lock-up clutch with the lock-up schedule in the ECM memory to detect any mechanical problems with the shift solenoid valve SLU, valve body or torque converter clutch.

AT

DTC No.	DTC Detection Conditions	Trouble Areas
P2757	Lock-up does not occur when driving in the lock-up range (normal driving at 50 mph [80 km/h]), or lock-up remains ON in the lock-up OFF range. (2-trip detection logic)	• Shift solenoid valve SLU remains open or closed • Valve body is blocked • Shift solenoid valve SLU • Torque converter clutch • Automatic transmission (clutch, brake or gear, etc.) • Line pressure is too low

MONITOR DESCRIPTION

Torque converter lock-up is controlled by the ECM based on turbine (input) speed sensor NT, output speed sensor SP2, the engine rpm, engine load, engine coolant temperature, vehicle speed, transmission fluid temperature, and gear selection. The ECM determines the lock-up status of the torque converter by comparing the engine rpm (NE) with the input turbine rpm (NT). The ECM calculates the actual transmission gear by comparing the input turbine rpm (NT) with the output shaft rpm (SP2). When the conditions are appropriate, the ECM requests "lock-up" by applying the control voltage to the shift solenoid SLU. When the SLU is turned on, solenoid SLU applies pressure to the lock-up relay valve and locks the torque converter clutch.
If the ECM detects no lock-up after lock-up has been requested or if it detects lock-up when it is not requested, the ECM interprets this as a fault in the shift solenoid valve SLU or lock-up system performance. The ECM turns on the MIL and stores the DTC.

Example:
When either of the following is met, the ECM interprets it as a malfunction.
1. There is a difference in rotation between before and after the torque converter even when the ECM requests lock-up.
   (Engine speed is at least 70 rpm greater than the input turbine speed.)
2. There is no difference in rotation between before and after the torque converter even when the ECM requests lock-up off.
   (The difference between the engine speed and input turbine speed is less than 35 rpm.)

MONITOR STRATEGY

Related DTCs	P2757: Shift solenoid valve SLU/OFF malfunction Shift solenoid valve SLU/ON malfunction
Required sensors/Components (Main)	Shift solenoid valve SLU
Required sensors/Components (Related)	Valve body, Vehicle speed sensor, Throttle position sensor, Speed sensor (NT), Speed sensor (SP2)
Frequency of operation	Continuous
Duration	OFF malfunction (A): 2 seconds OFF malfunction (B): 0.4 seconds ON malfunction: 1.8 seconds
MIL operation	2 driving cycles
Sequence of operation	None

TYPICAL ENABLING CONDITIONS

The following conditions are common to all OFF malfunctions (A), (B) and ON malfunction.

The monitor will run whenever the following DTCs are not present.	None
Turbine speed sensor (NT) circuit	No circuit malfunction
Output speed sensor (SP2) circuit	No circuit malfunction
Shift solenoid "A" (S1) circuit	No circuit malfunction
Shift solenoid "B" (S2) circuit	No circuit malfunction
Shift solenoid "E" (SR) circuit	No circuit malfunction
Torque converter clutch pressure control solenoid circuit	No circuit malfunction
Knock sensor circuit	No circuit malfunction
ETCS (Electronic Throttle Control System)	System not down
Transmission shift position	"D"
ECT (Engine Coolant Temperature)	40°C (104°F) or more
Spark advance from max. retard timing by knock sensor control	0° CA or more
Engine	Starting
ECM selected gear	4th or 5th
Vehicle speed	15.5 mph (25 km/h) or more
Shift solenoid "A" (S1) circuit	No circuit malfunction
Shift solenoid "B" (S2) circuit	No circuit malfunction
Pressure control solenoid "B" (SL2) circuit	No circuit malfunction
1-2 shift valve	No circuit malfunction
Transfer neutral position switch	OFF
Transfer range	"High" *1

*1: Following conditions are met

Vehicle speed sensor "A" circuit	No circuit malfunction

Output speed sensor circuit	No circuit malfunction
Transfer output speed	143 rpm or more
Transfer input speed/Transfer output speed	0.9 to 1.1

OFF malfunction (A)

ECM lock-up command	ON (SLU pressure: 513 kPa or more)
Vehicle speed	Less than 62.2 mph (100 km/h)

OFF malfunction (B)

ECM selected gear	2nd
Vehicle speed	1.2 mph (2 km/h) or more
Output speed	2nd → 1st down shift point or more
Throttle valve opening angle	6.5 % or more at engine speed of 2,000 rpm (Conditions vary with engine speed)

ON malfunction

ECM lock-up command	OFF (SLU pressure: less than 4 kPa)
Throttle valve opening angle	7 % or more
Vehicle speed	4th gear: Less than 37.3 mph (60 km/h) (Conditions vary with gear position)

TYPICAL MALFUNCTION THRESHOLDS

Both of the following conditions are met: OFF malfunction (A) and (B)

OFF malfunction (A)

Engine speed - Turbine speed	70 rpm or more

OFF malfunction (B)

Turbine speed/Output speed	Not 3.30 to 7.50

[ON malfunction]
2 detections are necessary in 1 driving cycle.
1st detection; temporary flag ON
2nd detection; pending fault code ON
Vehicle speed must be under 6.2 mph (10 km/h) once before the 2nd detection.

ON malfunction

Difference between engine speed and turbine speed	Less than 35 rpm

INSPECTION PROCEDURE

HINT:
Performing the ACTIVE TEST using the intelligent tester allows components, such as, the relay, VSV, and actuator, to be operated without removing any parts. Performing the ACTIVE TEST as a first step of troubleshooting is one method of shortening labor time.
It is possible to display the DATA LIST during the ACTIVE TEST.

1. Warm up the engine.
2. Turn the ignition switch off.
3. Connect the intelligent tester together with the CAN VIM (Controller Area Network Vehicle Interface Module) to the DLC3.
4. Turn the ignition switch to the ON position.
5. Push the "ON" button of the tester.
6. Clear the DTC.
7. Select the items "DIAGNOSIS / ENHANCED OBD II / ACTIVE TEST / LOCK UP".

8. According to the display on the tester, perform the "ACTIVE TEST".

Item	Test Details	Diagnostic Note
LOCK UP	[Test Details] Control the shift solenoid SLU to set the automatic transmission to the lock-up condition. [Vehicle Condition] Vehicle Speed: 36 mph (60 km/h) or more	Possible to check the SLU operation.

HINT:
This test can be conducted when the vehicle speed is 36 mph (60 km/h) or more.

9. Lightly depress the accelerator pedal and check that the engine speed does not change abruptly.

HINT:

- When changing the accelerator pedal opening angle while driving, if the engine speed does not change, lock-up is on.
- Slowly release, but not fully, the accelerator pedal in order to decelerate. (Fully releasing the pedal causes closure of the throttle valve and lock-up may be turned off automatically.)

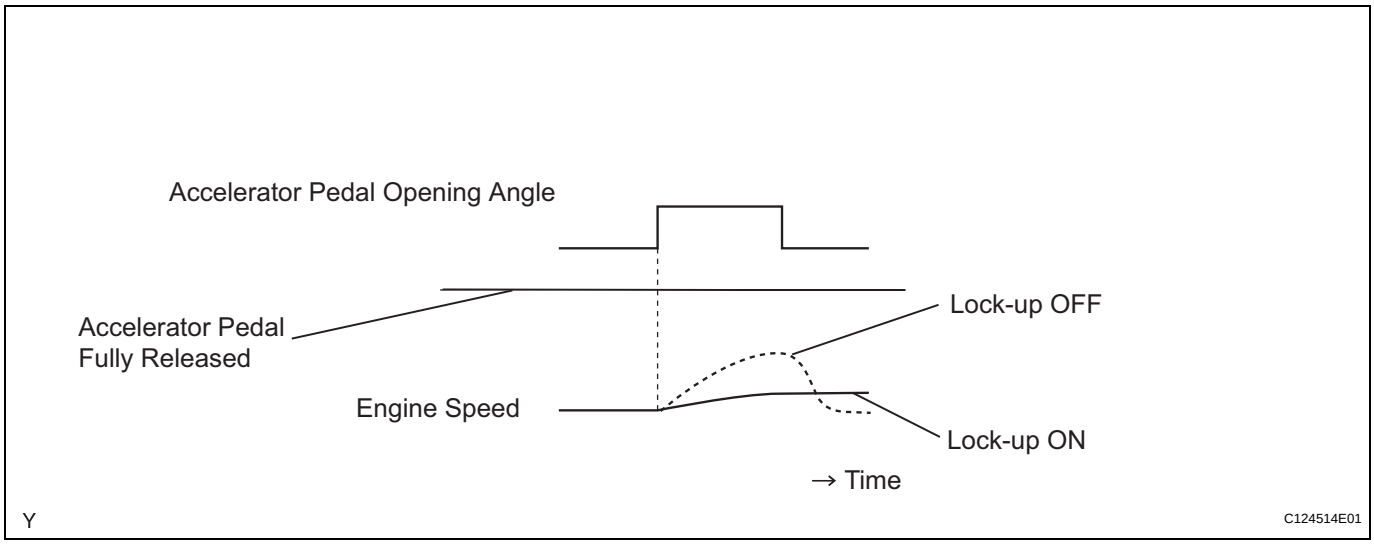

AT

1	CHECK ANY OTHER DTCS OUTPUT (IN ADDITION TO DTC P2757)

(a) Connect the intelligent tester to the DLC3.
(b) Turn the ignition switch to the ON position and push the intelligent tester main switch ON.
(c) Select the items "DIAGNOSIS / ENHANCED OBD II / DTC INFO / CURRENT CODES".
(d) Read the DTCs using the intelligent tester.

Result:

Display (DTC Output)	Proceed to
Only "P2757" is output	A
P2757" and other DTCs	B

HINT:
If any codes besides "P2757" are output, perform troubleshooting for those DTCs first.

B → GO TO DTC CHART

A

2	INSPECT SHIFT SOLENOID VALVE SLU

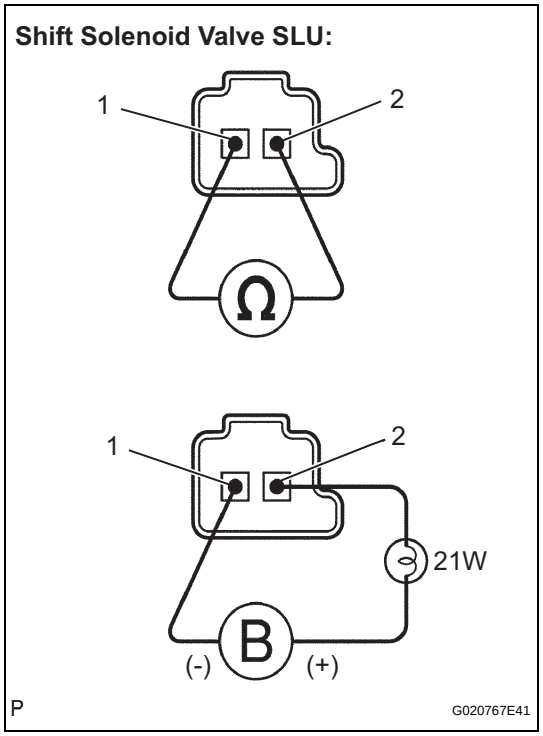

(a) Remove the shift solenoid valve SLU.
(b) Measure the resistance.
Standard resistance

Tester Connection	Specified Condition
1 - 2	5.0 to 5.6 Ω at 20°C (68°F)

(c) Connect the positive (+) lead with a 21 W bulb to terminal 2 and the negative (-) lead to terminal 1 of the solenoid valve connector, then check the movement of the valve.
OK:
The solenoid makes operating sounds.

NG → **REPLACE SHIFT SOLENOID VALVE SLU**

OK

3	INSPECT TRANSMISSION VALVE BODY ASSEMBLY (See chapter 2 in the problem symptoms table)

OK:
There are no foreign objects on any valves and they operate smoothly.

NG → **REPAIR OR REPLACE TRANSMISSION VALVE BODY ASSEMBLY**

OK

4	INSPECT TORQUE CONVERTER CLUTCH ASSEMBLY

(a) Inspect the torque converter clutch assembly (See page AT-186).
OK:
The torque converter clutch operates normally.

NG → **REPLACE TORQUE CONVERTER CLUTCH ASSEMBLY**

OK

REPAIR OR REPLACE AUTOMATIC TRANSMISSION ASSEMBLY

AT

DTC	P2759	Torque Converter Clutch Pressure Control Solenoid Control Circuit Electrical (Shift Solenoid Valve SLU)

DESCRIPTION

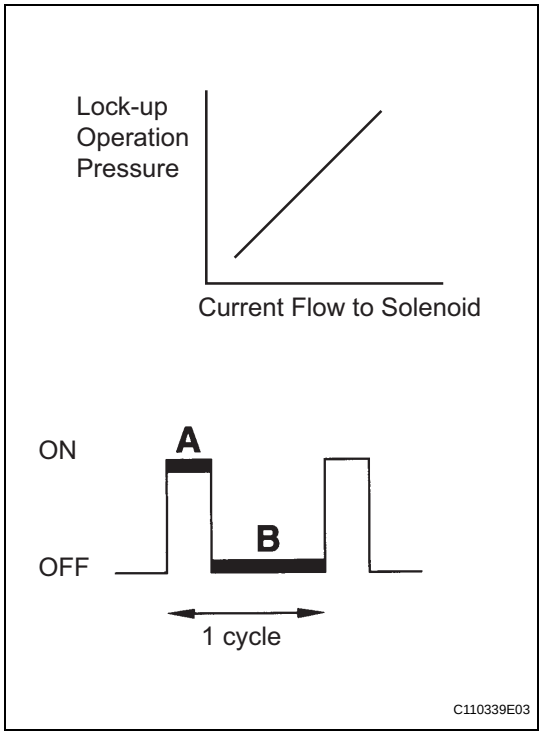

The current flow to the solenoid is controlled by the duty ratio* of the ECM output signal. The higher the duty ratio becomes, the higher the lock-up hydraulic pressure becomes during the lock-up operation.
*: The duty ratio is the ratio of the continuity to non-continuity in one cycle.
For example, if A is the period of continuity in one cycle, and B is the period of non-continuity, then Duty Ratio = A/(A+B) x 100(%).

AT

DTC No.	DTC Detection Conditions	Trouble Areas
P2759	Open or short is detected in shift solenoid valve SLU circuit for 1 second or more while driving (1-trip detection logic)	• Open or short in shift solenoid valve SLU circuit • Shift solenoid valve SLU • ECM

MONITOR DESCRIPTION

When an open or short is detected in the shift solenoid valve (SLU) circuit, the ECM determines that there is a malfunction. The ECM turns on the MIL and stores this DTC.

MONITOR STRATEGY

Related DTCs	P2759: Shift solenoid valve SLU/Range check
Required sensors/Components	Shift solenoid valve SLU
Frequency of operation	Continuous
Duration	Condition (A) and (B): 1 second
MIL operation	Immediate
Sequence of operation	None

TYPICAL ENABLING CONDITIONS

The following conditions are common to Condition (A) and (B).

The monitor will run whenever the following DTCs are not present.	None
Ignition switch	ON
Starter	OFF

Condition (A)

Solenoid current cut status	Not cut
Battery voltage	11 V or more

Condition (B)

Battery voltage	8 V or more

TYPICAL MALFUNCTION THRESHOLDS

Either of the following conditions is met: Condition (A) or (B)

Condition (A)

Solenoid status (SLU) from Hybrid IC	Fail

Condition (B)

Hybrid IC status	Fail

COMPONENT OPERATING RANGE

Shift solenoid valve SLU	Resistance: 5.0 to 5.6 Ω at 20°C (68°F)

WIRING DIAGRAM

B37
Electronically Controlled Transmission Solenoid

(Shift Solenoid Valve SLU)

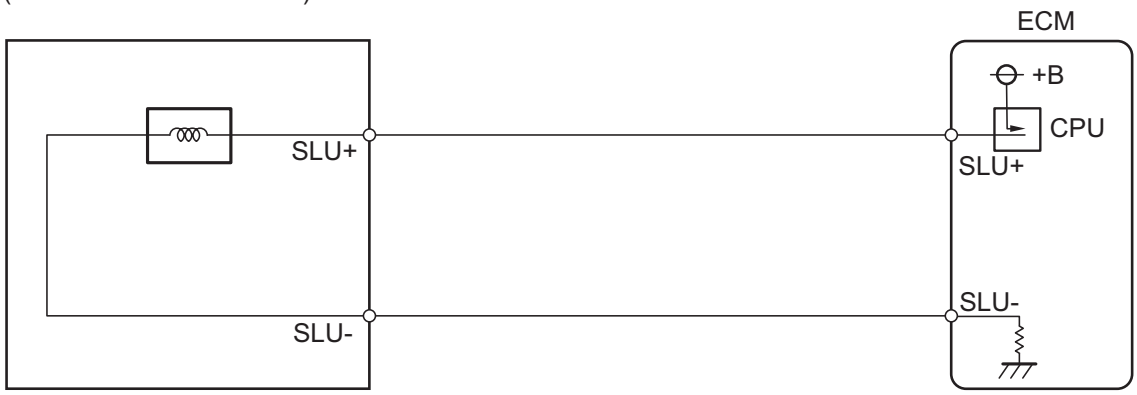

Y

C130126E03

AT

INSPECTION PROCEDURE

1	INSPECT TRANSMISSION WIRE (SLU)

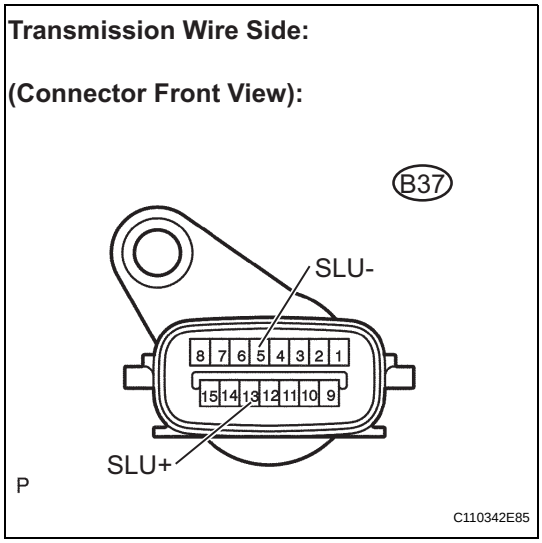

(a) Disconnect the transmission wire connector from the transmission.
(b) Measure the resistance.
Standard resistance

Tester Connection	Specified Condition
13 (SLU+) - 5 (SLU-)	5.0 to 5.6 Ω at 20°C (68°F)

(c) Measure the resistance.
Standard resistance (Check for short)

Tester Connection	Specified Condition
13 (SLU+) - Body ground	10 kΩ or higher
5 (SLU-) - Body ground	10 kΩ or higher

NG → **Go to step 3**

OK

2	CHECK HARNESS AND CONNECTOR (TRANSMISSION WIRE - ECM)

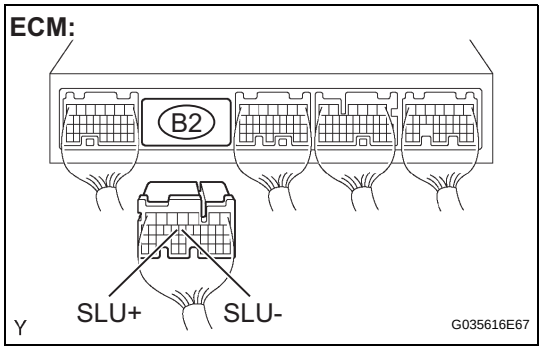

(a) Connect the transmission wire connector to the transmission.
(b) Disconnect the ECM connector.
(c) Measure the resistance.
Standard resistance

Tester Connection	Specified Condition
B2-15 (SLU+) - B2-14 (SLU-)	5.0 to 5.6 Ω at 20°C (68°F)

(d) Measure the resistance.
Standard resistance (Check for short)

Tester Connection	Specified Condition
B2-15 (SLU+) - Body ground	10 kΩ or higher
B2-14 (SLU-) - Body ground	10 kΩ or higher

NG → **REPAIR OR REPLACE HARNESS OR CONNECTOR**

OK

REPLACE ECM

AT

3	INSPECT SHIFT SOLENOID VALVE SLU

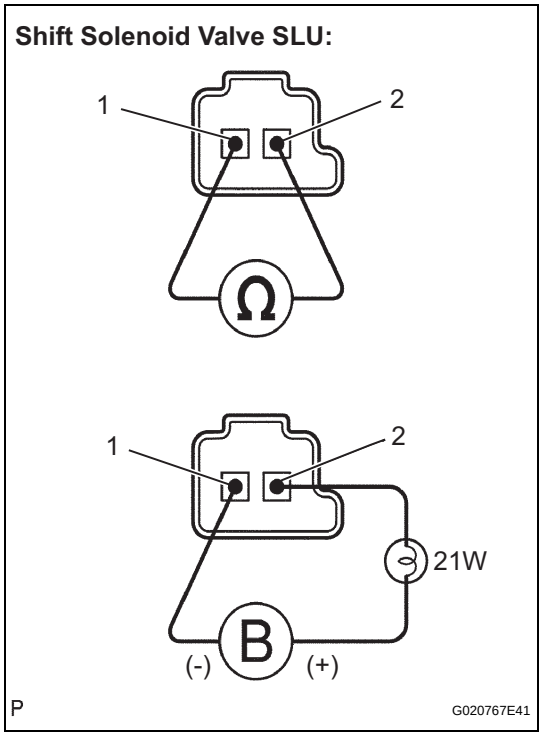

(a) Remove the shift solenoid valve SLU.
(b) Measure the resistance.
Standard resistance

Tester Connection	Specified Condition
1 - 2	5.0 to 5.6 Ω at 20°C (68°F)

(c) Connect the positive (+) lead with a 21 W bulb to terminal 2 and the negative (-) lead to terminal 1 of the solenoid valve connector, then check the movement of the valve.
OK:
The solenoid makes operating sounds.

NG → **REPLACE SHIFT SOLENOID VALVE SLU**

OK

REPAIR OR REPLACE TRANSMISSION WIRE

AT

DTC P2772 Transfer "L4" Switch Circuit

DESCRIPTION

The ECM detects the signal from the No. 1 transfer indicator switch (Transfer L4 position switch).
This DTC indicates that the No. 1 transfer indicator switch remains ON.

DTC No.	DTC Detection Conditions	Trouble Areas
P2772	No. 1 transfer indicator switch remains ON while vehicle running under following conditions for 1.8 seconds or more. (1-trip detection logic) (a) Output shaft speed: between 1,000 rpm and 3,000 rpm (b) Transfer high and low shift lever position: H	• Short in No. 1 transfer indicator switch (Transfer L4 position switch) circuit • No. 1 transfer indicator switch • ECM

MONITOR DESCRIPTION

The ECM monitors the No. 1 transfer indicator switch to determine whether the transfer-case L4 gear is engaged. If the transfer-case L4 gears remain engaged under the following conditions, the ECM determines that there is a malfunction of the No. 1 transfer indicator switch:

- No. 1 transfer indicator switch indicates that the L4 transfer-case gears are engaged.
- Transfer high and low shift lever is in the "H" position.
- Transfer-case output shaft rpm is between 1,000 and 3,000 rpm.
- The specified time period has elapsed.

If all of the above conditions are met, the ECM determines that there is a malfunction of the No. 1 transfer indicator switch, illuminates the MIL and stores the DTC.

MONITOR STRATEGY

Related DTCs	P2772 : Transfer L4 position switch/ON malfunction
Required sensors/Components	No. 1 transfer indicator switch (Transfer L4 position switch)
Frequency of operation	Continuous
Duration	ON malfunction (A) 1.8 seconds ON malfunction (B) 0.5 seconds
MIL operation	Immediate
Sequence of operation	None

AT

TYPICAL ENABLING CONDITIONS

The following conditions are common to ON malfunctions (A) and (B).

The monitor will run whenever the following DTCs are not present.	None
Output speed sensor (SP2) circuit	No circuit malfunction
Vehicle speed sensor "A" circuit	No circuit malfunction
Transmission neutral position switch	OFF

ON malfunction (A)

Output speed (Transfer output speed)	1,000 to 3,000 rpm

ON malfunction (B)

Output speed (Transfer output speed)	143 rpm or more

TYPICAL MALFUNCTION THRESHOLDS

Both of the following conditions are met: ON malfunctions (A) and (B)

ON malfunction (A)

No. 1 transfer indicator switch	ON

ON malfunction (B)

Actual transfer gear ratio Transfer input speed/Transfer output speed	0.9 to 1.1

WIRING DIAGRAM

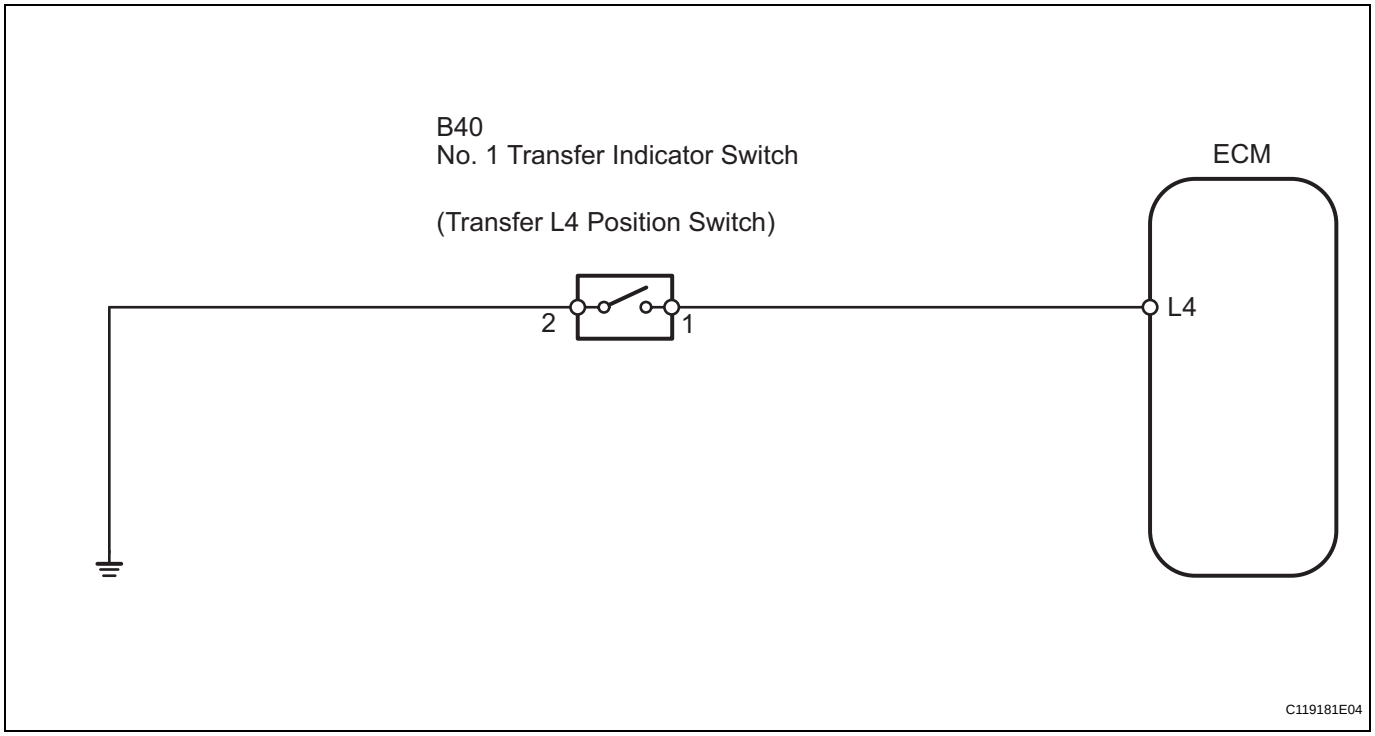

AT

INSPECTION PROCEDURE

1	INSPECT NO. 1 TRANSFER INDICATOR SWITCH (TRANSFER L4 POSITION SWITCH)

No. 1 Transfer Indicator Switch:

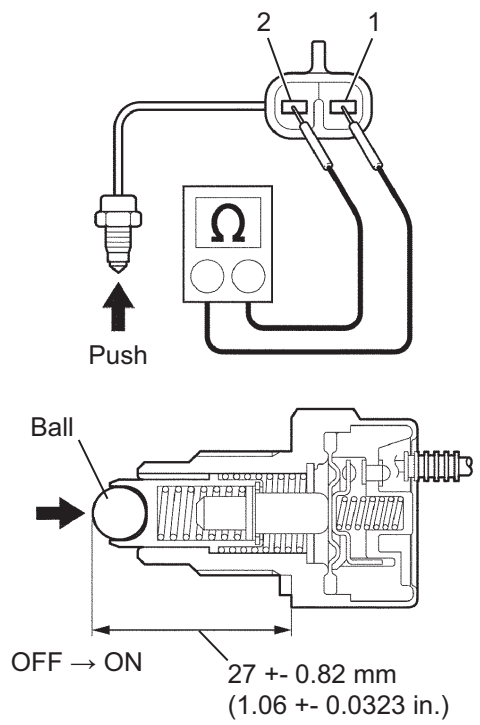

(a) Remove the No. 1 transfer indicator switch.
(b) Measure the resistance when pushing the ball at the tip of the switch.

Standard resistance

Switch Ball	Tester Connection	Specified Condition
Push	1 - 2	Below 1 Ω
Free	1 - 2	10 kΩ or higher

NG → **REPLACE NO. 1 TRANSFER INDICATOR SWITCH**

OK

AT

2	CHECK HARNESS AND CONNECTOR (ECM - NO. 1 TRANSFER INDICATOR SWITCH - BODY GROUND)

ECM:

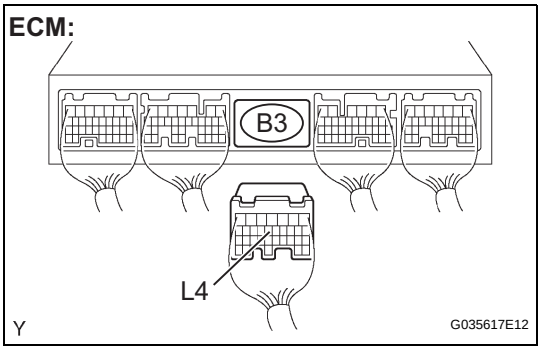

(a) Install the No. 1 transfer indicator switch.
(b) Disconnect the ECM connector.
(c) Measure the resistance when the transfer high and low shift lever is in any position other than the L position.

Standard resistance

Shift Position	Tester Connection	Specified Condition
Except L position	B3-13 (L4) - Body ground	10 kΩ or higher

NG → **REPAIR OR REPLACE HARNESS OR CONNECTOR**

OK

REPLACE ECM

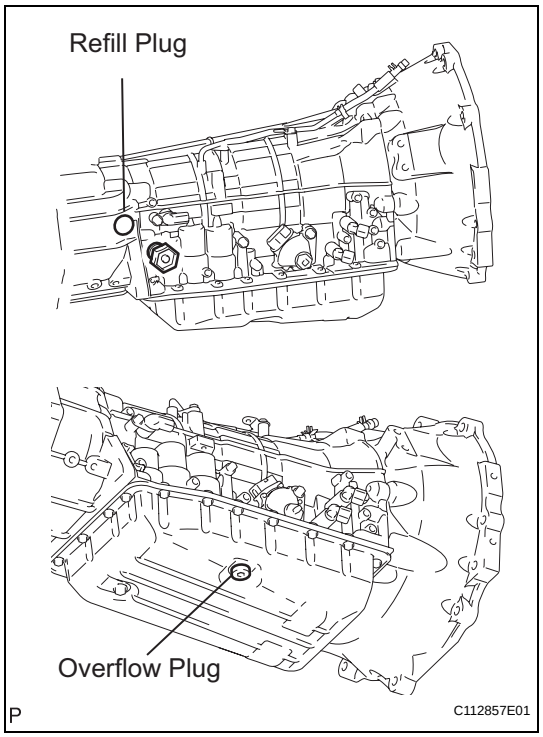

AUTOMATIC TRANSMISSION FLUID

ADJUSTMENT

1. BEFORE REFILL TRANSMISSION

- This transmission requires Toyota Genuine ATF WS transmission fluid.
- After servicing the transmission, you must refill the transmission with the correct amount of fluid.
- Maintain the vehicle in a horizontal position while adjusting the fluid level.
- If the transmission pan, drain plug, valve body or torque converter is replaced, proceed to the "transmission pan fill" procedures.
- If the transmission hose or output shaft oil seal is replaced, remove the refill plug and proceed to the "transmission fill" procedures.
- If the entire transmission is replaced, proceed to the "fluid circulation" procedures.

  HINT:

  New transmissions are already filled with transmission fluid.

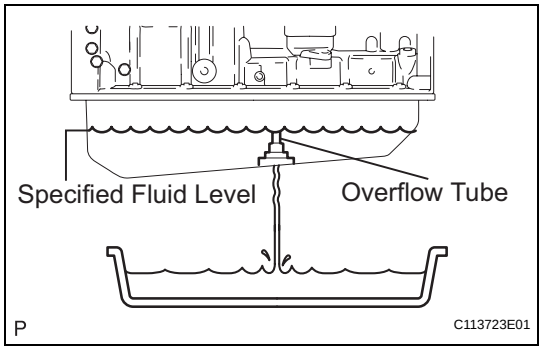

2. TRANSMISSION PAN FILL

(a) Remove the refill plug and overflow plug.

(b) Fill the transmission through the refill hole until fluid begins to trickle out of the overflow tube.

(c) Reinstall the overflow plug.

3. TRANSMISSION FILL

(a) Fill the transmission with the amount of fluid listed in the table below.

(b) Reinstall the refill plug to prevent the fuel from splashing.

Standard capacity

Repair	Fill Amount
Transmission hose and pipe removal	0.6 liters (0.63 US qts, 0.53 Imp.qts)
Output shaft oil seal replacement	0.4 liters (0.42 US qts, 0.35 Imp.qts)
Transmission pan and drain plug removal	1.7 liters (1.8 US qts, 1.5 Imp.qts)
Transmission valve body removal	4.3 liters (4.54 US qts, 3.78 Imp.qts)
Torque converter removal	5.4 liters (5.71 US qts, 4.75 Imp.qts)

HINT:

If the amount of fluid listed in the table cannot be added, perform the next step.

(c) When the amount of fluid listed in table cannot be added:

(1) Install the refill plug.

(2) Allow the engine to idle with the air conditioning OFF.

(3) Move the shift lever through the entire gear range to circulate fluid.

(4) Wait for 30 seconds with the engine idling.

(5) Stop the engine.
(6) Remove the refill plug and add fluid.
(7) Reinstall the refill plug.

4. FLUID CIRCULATION

(a) Allow the engine to idle with the air conditioning OFF.
(b) Move the shift lever through the entire gear range to circulate fluid.
(c) Allow the engine to idle until the fluid temperature reaches 46°C (115°F). Proceed to the step to the next to check fluid temperature.
HINT:
The fluid temperature should be less than 30°C (86°F) before starting the engine.

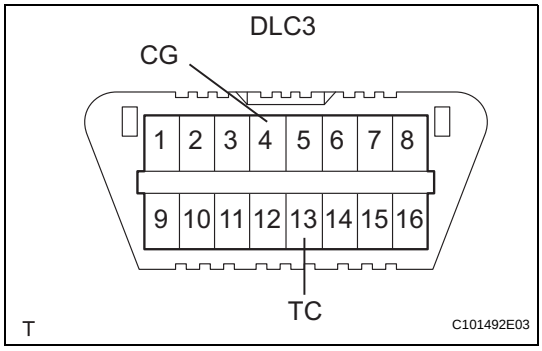

5. FLUID TEMPERATURE CHECK

(a) Using SST, connect terminals TC and CG of the DLC3.
SST 09843-18040
(b) Move the shift lever back and forth between N and D at 1.5 second intervals for 6 seconds.

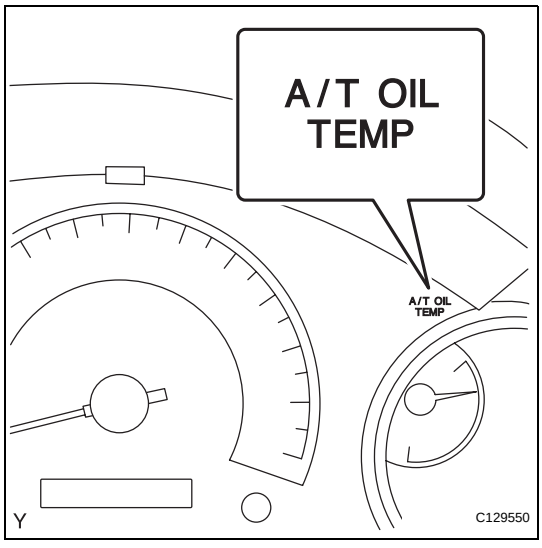

(c) The A/T OIL TEMP indicator turns on for 2 seconds when the combination meter starts to detect the fluid temperature.
(d) The A/T OIL TEMP indicator turns on again when the fluid temperature reaches 46°C (115°F) and blinks when it exceeds 56°C (130°F).

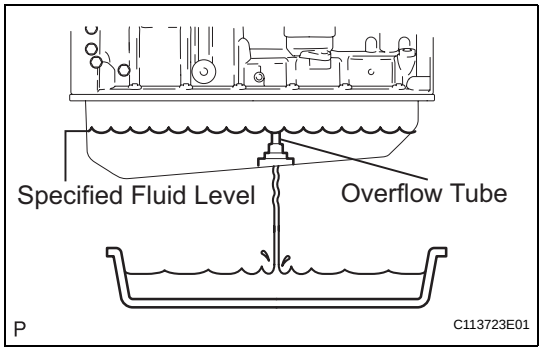

6. FLUID LEVEL CHECK

NOTICE:
- **The fluid temperature must be between 46°C (115°F) and 56°C (130°F) to check the fluid level.**
- **Do not insert the fill nozzle into the refill hole more than 30 mm (1.2 in.), to avoid contact with the moving parts.**

(a) Remove the overflow plug with the engine idling.
(b) Check that the fluid comes out of the overflow tube.
(c) Wait until the overflow slows to a trickle.
If fluid does not come out, perform the following.
(1) Install the overflow plug.

AT

(2) Stop the engine.
(3) Remove the refill plug.
(4) Add 0.4 liters (0.21 US qts, 0.18 lmp qts) of fluid.
(5) Allow the engine to idle.
(6) Remove the overflow plug.
(7) Wait until fluid begins to trickle out of the overflow tube.

SPEED SENSOR

COMPONENTS

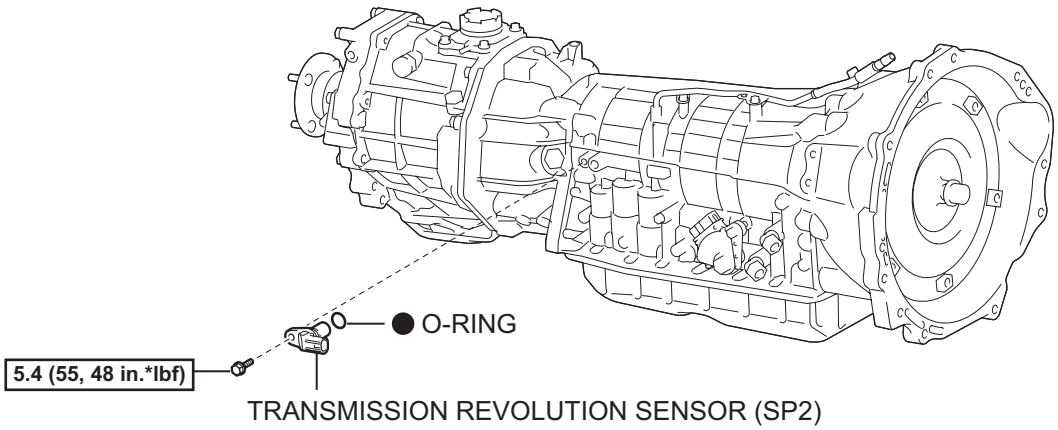

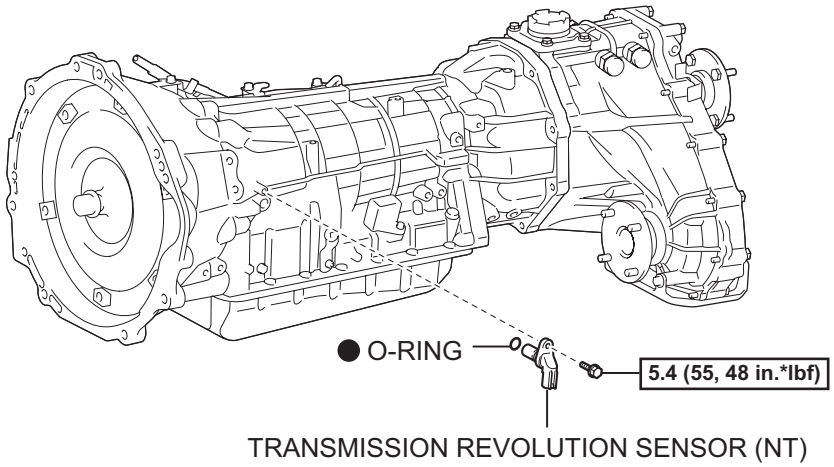

N*m (kgf*cm, ft*lbf) :Specified torque

● Non-reusable part

P

C129565E01

AT

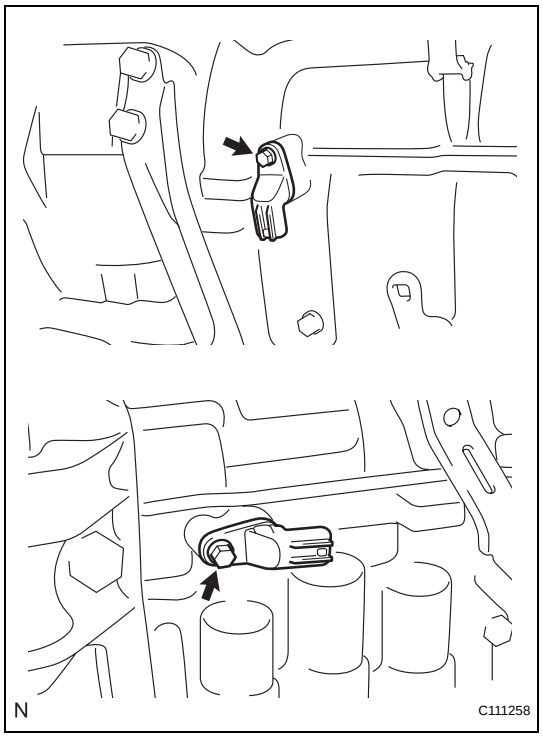

REMOVAL

1. REMOVE TRANSMISSION REVOLUTION SENSOR

(a) Disconnect the 2 transmission revolution sensor connectors.

(b) Remove the 2 bolts and 2 transmission revolution sensors.

(c) Remove the O-ring from each sensor.

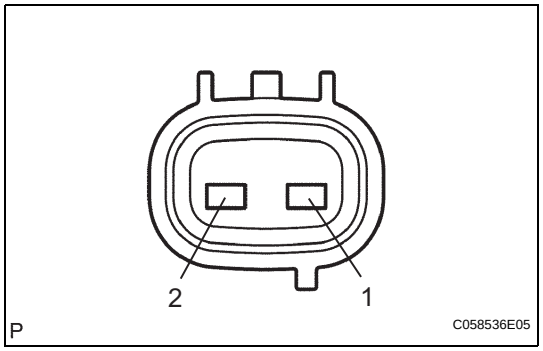

INSPECTION

1. INSPECT TRANSMISSION REVOLUTION SENSOR (NT)

(a) Measure the resistance of the sensor.

Standard resistance

Tester Connection	Condition	Specified Condition
1 - 2	20°C (68°F)	560 to 680 Ω

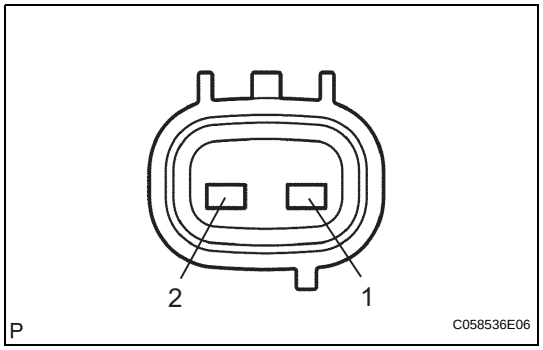

2. INSPECT TRANSMISSION REVOLUTION SENSOR (SP2)

(a) Measure the resistance of the sensor.

Standard resistance

Tester Connection	Condition	Specified Condition
1 - 2	20°C (68°F)	560 to 680 Ω

AT

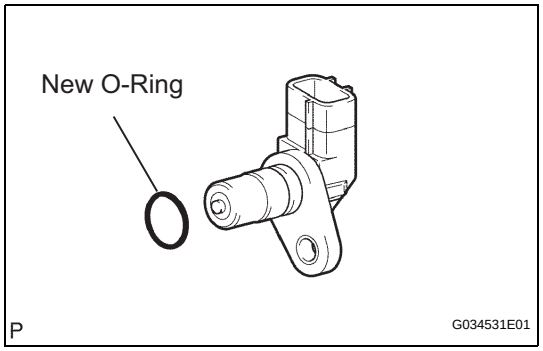

INSTALLATION

1. INSTALL TRANSMISSION REVOLUTION SENSOR

(a) Coat 2 new O-rings with ATF and install one onto each transmission revolution sensor.

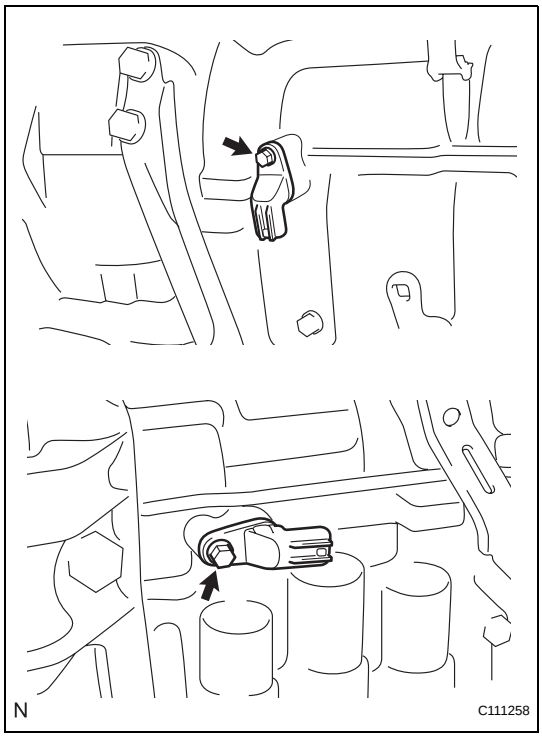

(b) Install the 2 transmission revolution sensors with the 2 bolts.
Torque: 5.4 N*m (55 kgf*cm, 48 in.*lbf)

(c) Connect the 2 transmission revolution sensor connectors.

TRANSMISSION WIRE

COMPONENTS

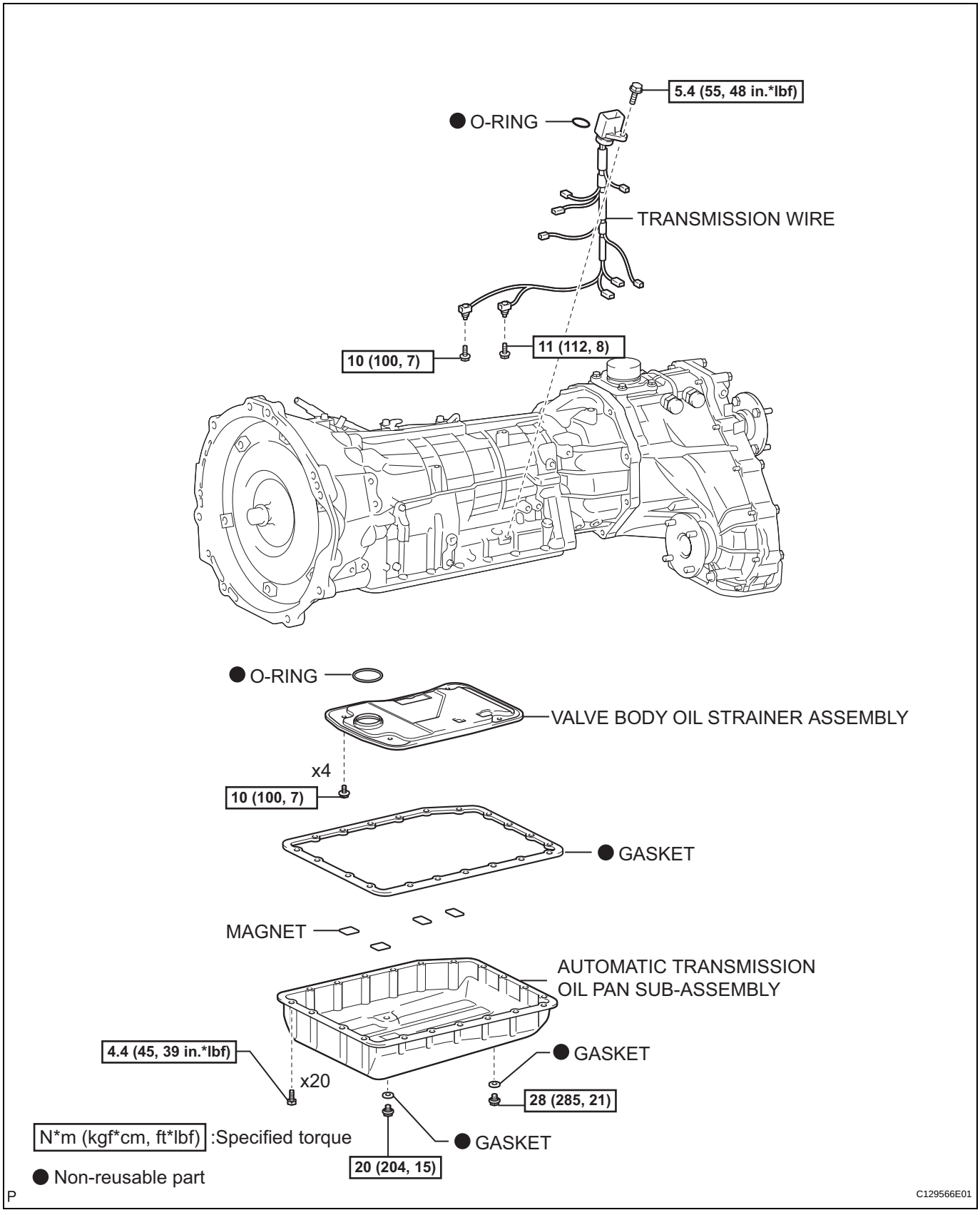

AT

REMOVAL

1. DISCONNECT CABLE FROM NEGATIVE BATTERY TERMINAL

2. DRAIN AUTOMATIC TRANSMISSION FLUID

(a) Remove the drain plug and gasket, and drain ATF.

(b) Install a new gasket and the drain plug.

Torque: 28 N*m (285 kgf*cm, 21 ft.*lbf)

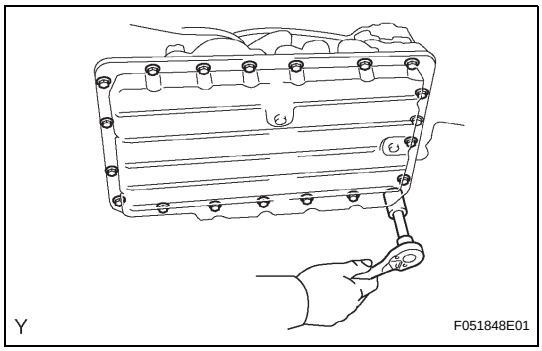

3. REMOVE AUTOMATIC TRANSMISSION OIL PAN SUB-ASSEMBLY

NOTICE:

Some fluid will remain in the oil pan.

(a) Remove the 20 bolts and the oil pan.

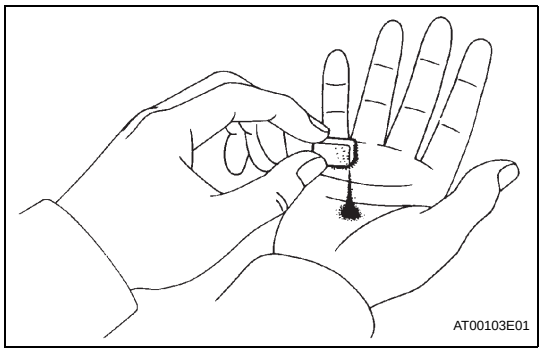

(b) Examine the particles in the pan.

(1) Remove the magnets and use them to collect steel particles. Carefully inspect the foreign matter and particles in the pan and on the magnets to anticipate the type of wear you will find in the transmission.

Steel (magnetic): bearing, gear and clutch plate wear

Brass (non-magnetic): bushing wear

4. REMOVE VALVE BODY OIL STRAINER ASSEMBLY

(a) Remove the 4 bolts and the oil strainer.

NOTICE:

Be careful as some fluid will come out of the oil strainer.

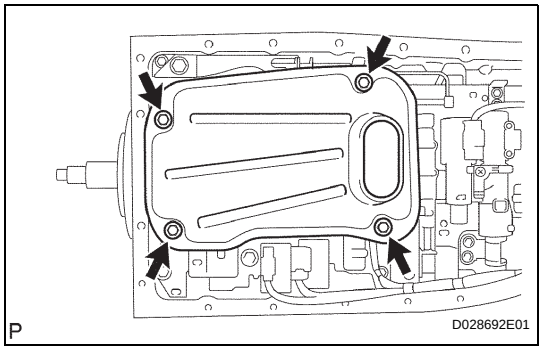

5. SEPARATE TRANSMISSION WIRE

(a) Remove the 2 bolts and 2 clamps.

(b) Disconnect the ATF temperature sensor.

(c) Disconnect the 7 connectors from the solenoid valves.

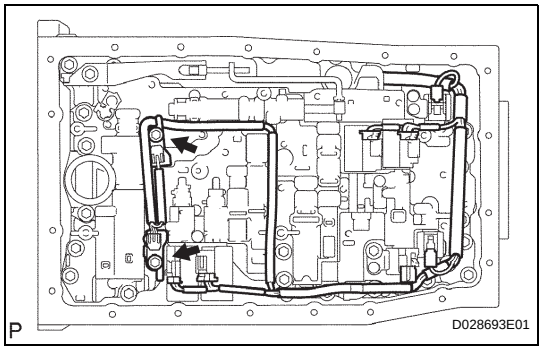

AT

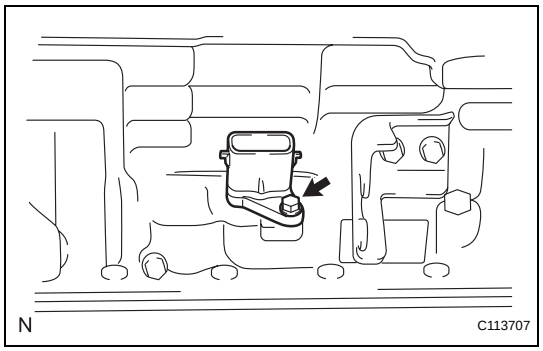

6. REMOVE TRANSMISSION WIRE

(a) Disconnect the transmission wire connector.

(b) Remove the bolt and pull out the transmission wire.

INSPECTION

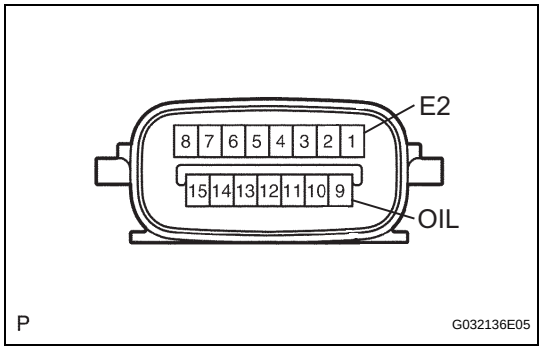

1. INSPECT TRANSMISSION WIRE

(a) Using an ohmmeter, measure the resistance between the terminals.

Standard resistance

Tester Connection	Specified Condition
1 (E2) - 9 (OIL)	3 to 4 kΩ at 20 °C (68°F)
1 (E2) - 9 (OIL)	0.22 to 0.28 kΩ at 110°C (230°F)

INSTALLATION

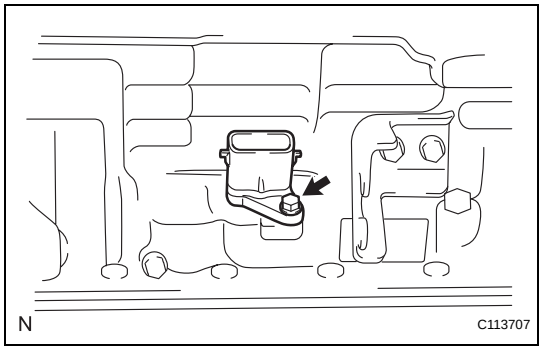

1. INSTALL TRANSMISSION WIRE

(a) Install the transmission wire with the bolt.

Torque: 5.4 N*m (55 kgf*cm, 48 in.*lbf)

(b) Connect the transmission wire connector.

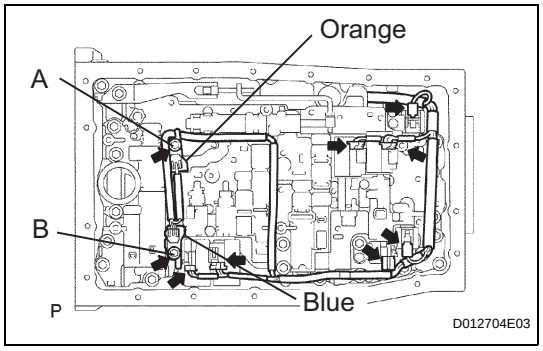

2. CONNECT TRANSMISSION WIRE

(a) Connect the 7 connectors to the solenoid valves.

(b) Install the 2 clamps with the 2 bolts.

Torque: 10 N*m (100 kgf*cm, 7 ft.*lbf) for bolt A
11 N*m (112 kgf*cm, 8 ft.*lbf) for bolt B

Bolt length:
12 mm (0.47 in.) for bolt A
36 mm (1.42 in.) for bolt B

(c) Connect the ATF temperature sensor.

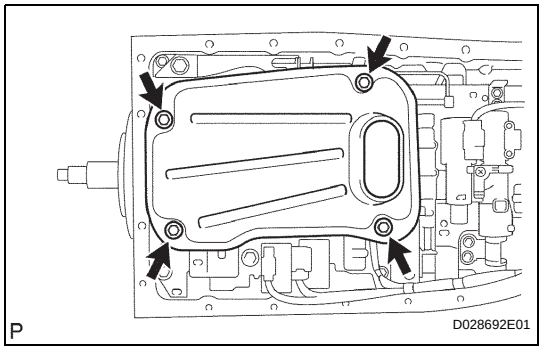

3. INSTALL VALVE BODY OIL STRAINER ASSEMBLY

(a) Install a new O-ring and the oil strainer with the 4 bolts.

Torque: 10 N*m (100 kgf*cm, 7 ft.*lbf)

AT

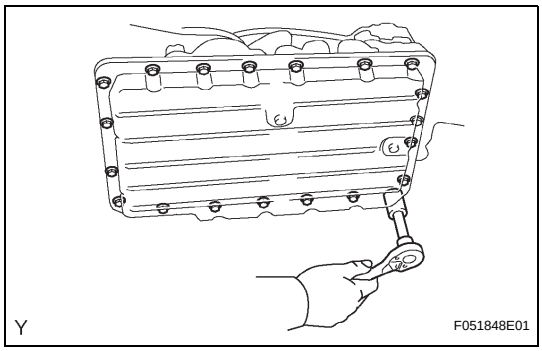

4. **INSTALL AUTOMATIC TRANSMISSION OIL PAN SUB-ASSEMBLY**
HINT:
Remove the gasket and be careful not to spill oil on the contacting surfaces of the transmission case and oil pan.
(a) Install the oil pan with the 20 bolts.
Torque: 4.4 N*m (45 kgf*cm, 39 in.*lbf)

5. **CONNECT CABLE TO NEGATIVE BATTERY TERMINAL**
Torque: 3.9 N*m (40 kgf*cm, 35 in.*lbf)

6. **PERFORM INITIALIZATION**
(See page AT-19)

7. **ADJUST AUTOMATIC TRANSMISSION FLUID**
(See page AT-147)

PARK / NEUTRAL POSITION SWITCH

COMPONENTS

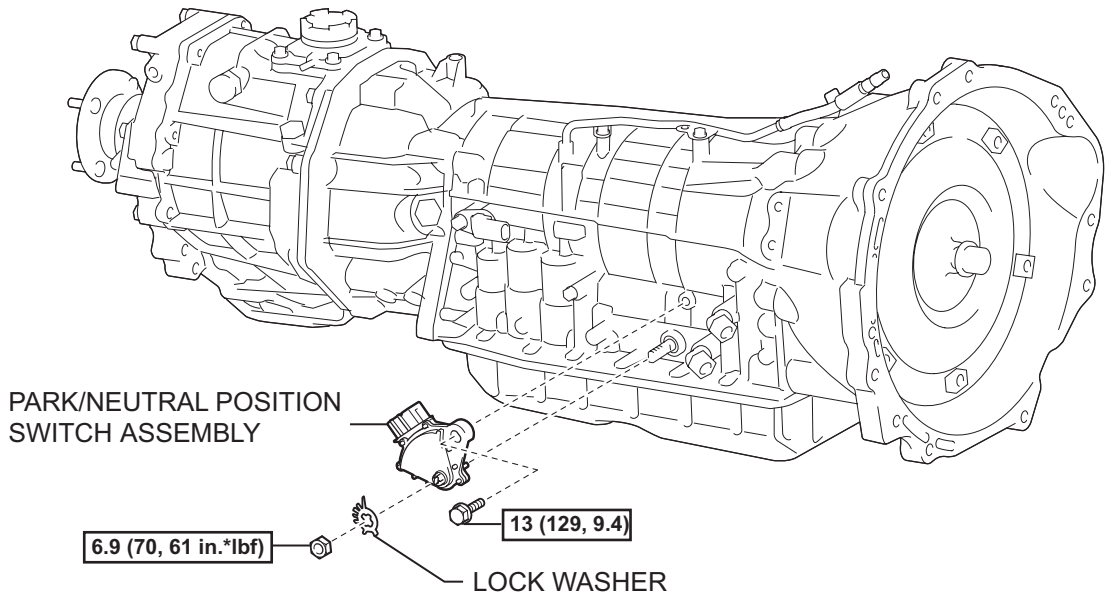

N*m (kgf*cm, ft*lbf) :Specified torque

P

C129568E01

AT

ON-VEHICLE INSPECTION

1. INSPECT PARK/NEUTRAL POSITION SWITCH ASSEMBLY

(a) Apply the parking brake and turn the ignition switch ON.

(b) Depress the brake pedal and check that the engine starts when the shift lever is in N or P, but does not start in other positions.

(c) Check that the back-up light illuminates and the reverse warning buzzer sounds when the shift lever is in R, but not in other positions.

REMOVAL

1. **DISCONNECT CABLE FROM NEGATIVE BATTERY TERMINAL**
2. **DISCONNECT PARK/NEUTRAL POSITION SWITCH CONNECTOR**
3. **REMOVE PARK/NEUTRAL POSITION SWITCH ASSEMBLY**
   (a) Using a screwdriver, pry out the lock washer.
   (b) Remove the lock nut and lock washer.
   (c) Remove the bolt and park/neutral position switch.

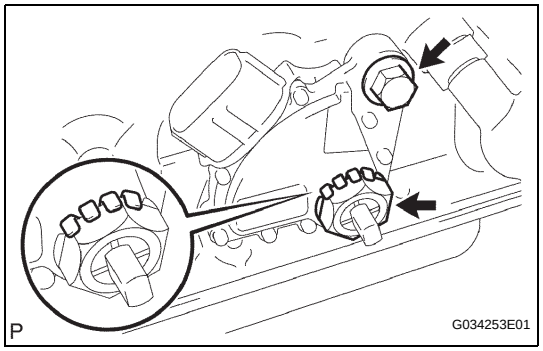

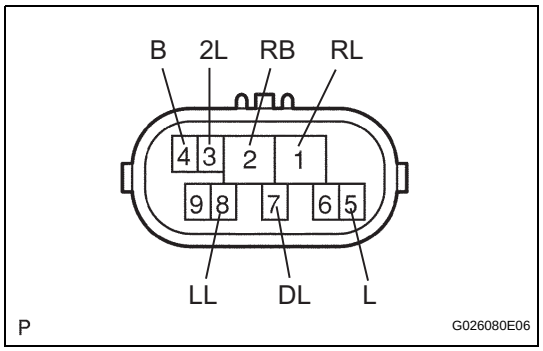

INSPECTION

1. **INSPECT PARK/NEUTRAL POSITION SWITCH**
   (a) Measure the resistance of the PNP switch when the shift lever is moved to each position.
   Standard resistance

Tester Connection	Shift Lever Position	Specified Condition
4 (B) - 5 (L)	P or N	Below 1 Ω
4 (B) - 5 (L)	Except P and N	10 kΩ or higher
1 (RL) - 2 (RB)	R	Below 1 Ω
1 (RL) - 2 (RB)	Except R	10 kΩ or higher
2 (RB) - 7 (DL)	D	Below 1 Ω
2 (RB) - 7 (DL)	Except D	10 kΩ or higher
2 (RB) - 3 (2L)	2	Below 1 Ω
2 (RB) - 3 (2L)	Except 2	10 kΩ or higher
2 (RB) - 8 (LL)	L	Below 1 Ω
2 (RB) - 8 (LL)	Except L	10 kΩ or higher

AT

ADJUSTMENT

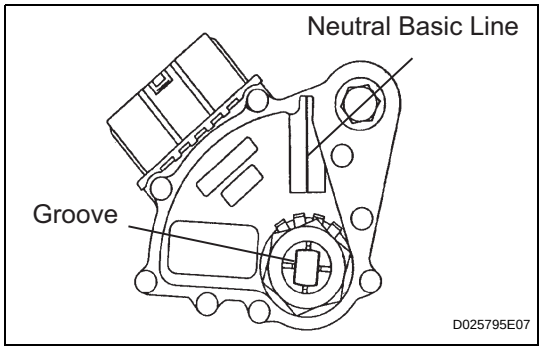

1. **ADJUST PARK/NEUTRAL POSITION SWITCH ASSEMBLY**
   (a) Loosen the park/neutral position switch bolt and move the shift lever to N.
   (b) Align the switch groove with the neutral basic line.
   (c) Hold the switch in position and tighten the bolt.
   Torque: 13 N*m (129 kgf*cm, 9.4 ft.*lbf)
   (d) After adjustment, perform the inspection.

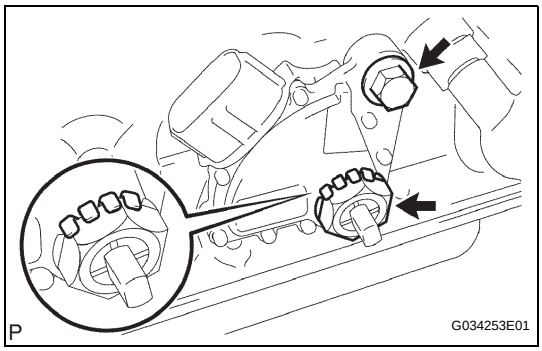

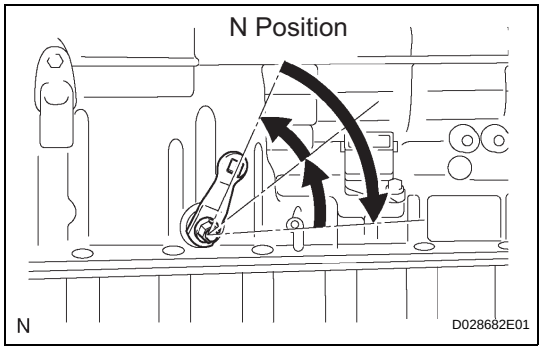

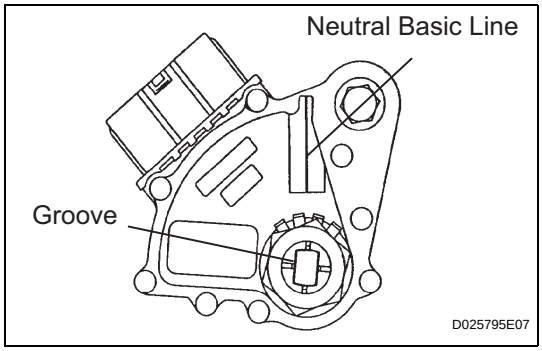

INSTALLATION

1. **INSTALL PARK/NEUTRAL POSITION SWITCH ASSEMBLY**
   (a) Install the park/neutral position switch onto the manual valve shaft.
   (b) Temporarily install the bolt.
   (c) Install a new lock washer and the nut.
   Torque: 6.9 N*m (70 kgf*cm, 61 in.*lbf)
   (d) Push the control shaft rearward as much as possible.
   (e) Return the control shaft lever 2 notches to the N position.
   (f) Align the neutral basic line with the switch groove, and tighten the bolt.
   Torque: 13 N*m (129 kgf*cm, 9.4 ft.*lbf)
   (g) Using a screwdriver, bend the tabs of the lock washer.
2. **CONNECT PARK / NEUTRAL POSITION SWITCH CONNECTOR**
3. **CONNECT CABLE TO NEGATIVE BATTERY TERMINAL**
   Torque: 3.9 N*m (40 kgf*cm, 35 in.*lbf)
4. **PERFORM INITIALIZATION**
   (See page AT-19)
5. **INSPECT SHIFT LEVER POSITION (See page AT-171)**
6. **ADJUST SHIFT LEVER POSITION (See page AT-172)**
7. **INSPECT PARK/NEUTRAL POSITION SWITCH ASSEMBLY (See page AT-158)**

AT

VALVE BODY ASSEMBLY

COMPONENTS

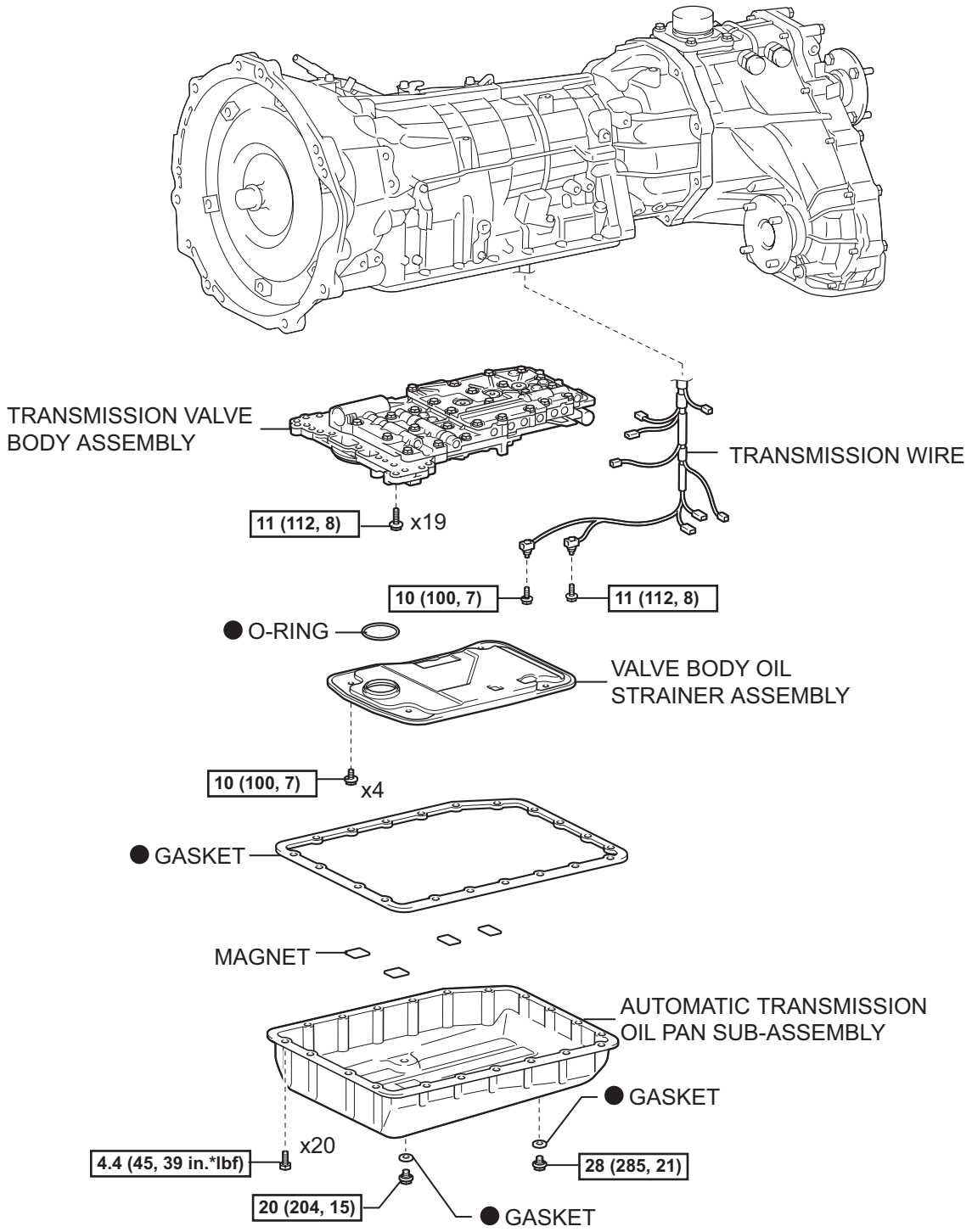

AT

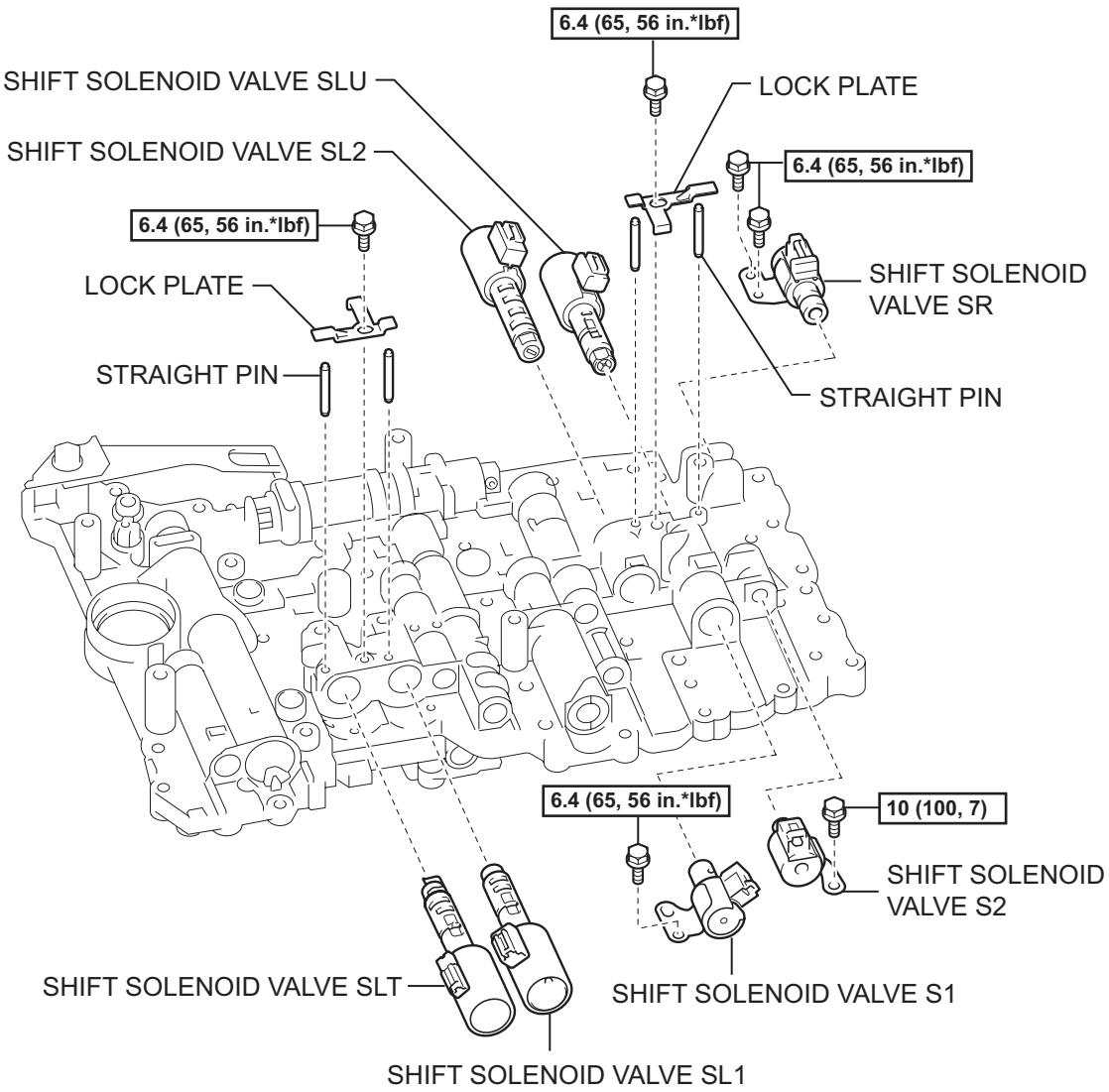

N*m (kgf*cm, ft*lbf) :Specified torque

P

C112831E03

AT

REMOVAL

1. DISCONNECT CABLE FROM NEGATIVE BATTERY TERMINAL

2. DRAIN AUTOMATIC TRANSMISSION FLUID

(a) Remove the drain plug and gasket, and drain ATF.

(b) Install a new gasket and the drain plug.

Torque: 28 N*m (285 kgf*cm, 21 ft.*lbf)

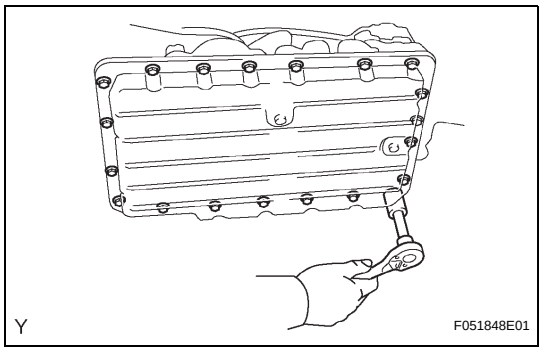

3. REMOVE AUTOMATIC TRANSMISSION OIL PAN SUB-ASSEMBLY

NOTICE:

Some fluid will remain in the oil pan.

(a) Remove the 20 bolts and oil pan.

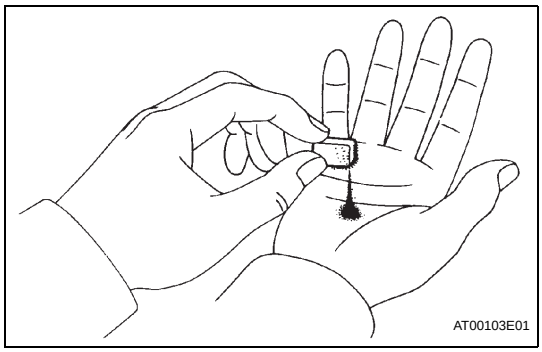

(b) Examine the particles in the oil pan.

(1) Remove all the magnets and use them to collect steel particles. Carefully look at the foreign matter and particles in the pan and on the magnets to determine the type of wear you will find in the transmission.

Steel (magnetic): bearing, gear and clutch plate wear

Brass (non-magnetic): bushing wear

4. REMOVE VALVE BODY OIL STRAINER ASSEMBLY

(a) Remove the 4 bolts and oil strainer.

NOTICE:

Be careful as some fluid may leak out of the oil strainer.

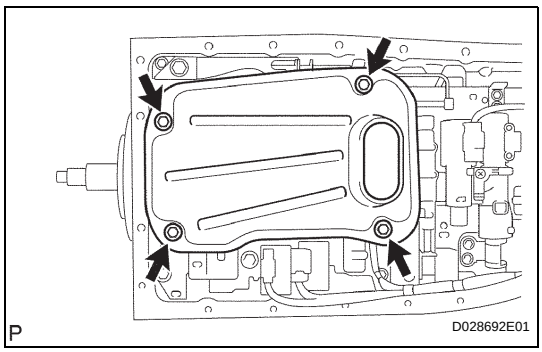

5. DISCONNECT TRANSMISSION WIRE

(a) Remove the 2 bolts and 2 clamps.

(b) Disconnect the ATF temperature sensor.

(c) Disconnect the 7 connectors from the solenoid valves.

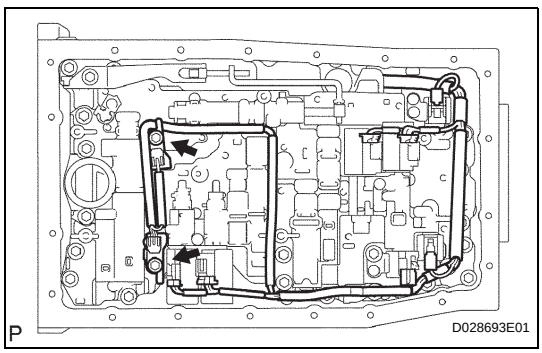

AT

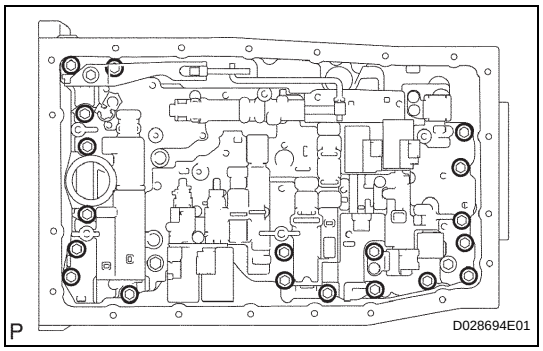

6. REMOVE TRANSMISSION VALVE BODY ASSEMBLY

(a) Remove the 19 bolts and valve body.
(b) Remove the 3 drum seal gaskets.

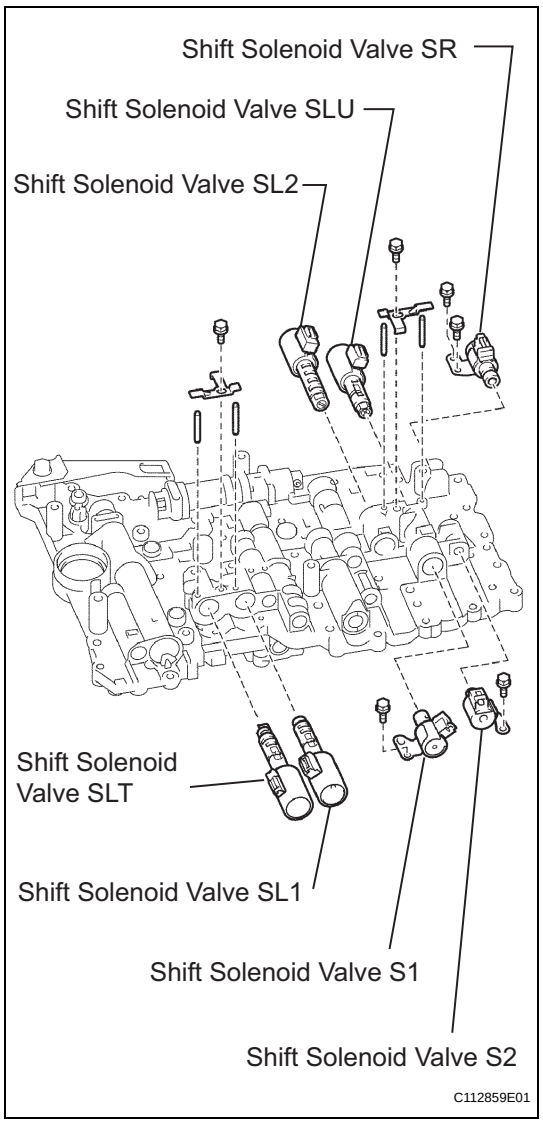

DISASSEMBLY

1. REMOVE SHIFT SOLENOID VALVE

(a) Remove the bolt, lock plate, 2 pins and shift solenoid valves SLT and SL1.
(b) Remove the bolt, lock plate, 2 pins and shift solenoid valves SLU and SL2.
(c) Remove the 2 bolts and shift solenoid valve SR.
(d) Remove the bolt and shift solenoid valve S1.
(e) Remove the bolt and shift solenoid valve S2.

AT

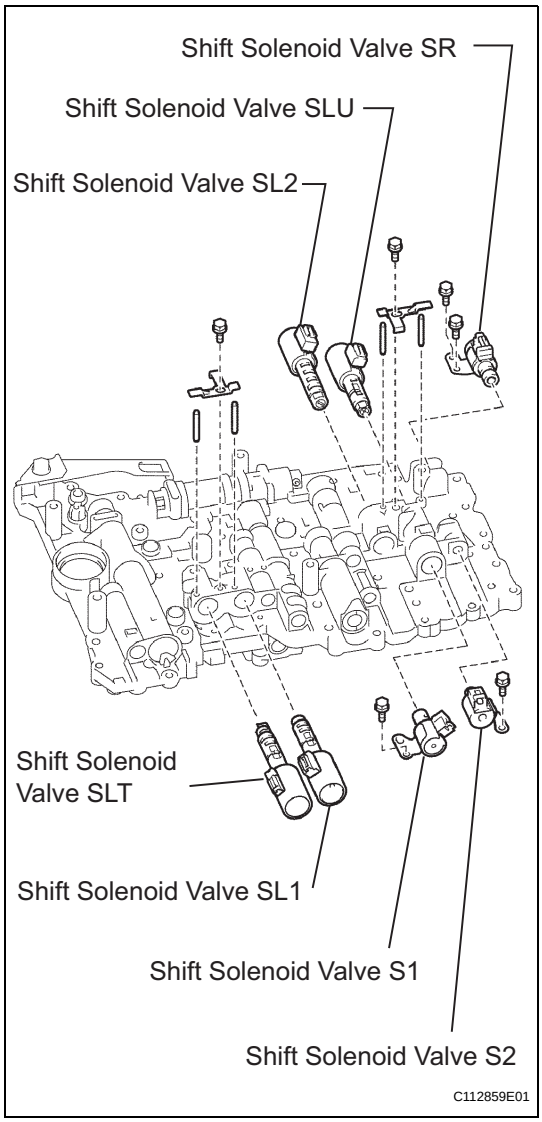

REASSEMBLY

1. INSTALL SHIFT SOLENOID VALVE

(a) Install the shift solenoid valve S2 with the bolt.
Torque: 10 N*m (100 kgf*cm, 7 ft.*lbf)

(b) Install the shift solenoid valve S1 with the bolt.
Torque: 6.4 N*m (65 kgf*cm, 56 in.*lbf)

(c) Install the shift solenoid valve SR with the 2 bolts.
Torque: 6.4 N*m (65 kgf*cm, 56 in.*lbf)

(d) Install the shift solenoid valves SLU and SL2 with the 2 pins, lock plate and bolt.
Torque: 6.4 N*m (65 kgf*cm, 56 in.*lbf)

(e) Install the shift solenoid valves SLT and SL1 with the 2 pins, lock plate and bolt.
Torque: 6.4 N*m (65 kgf*cm, 56 in.*lbf)

AT

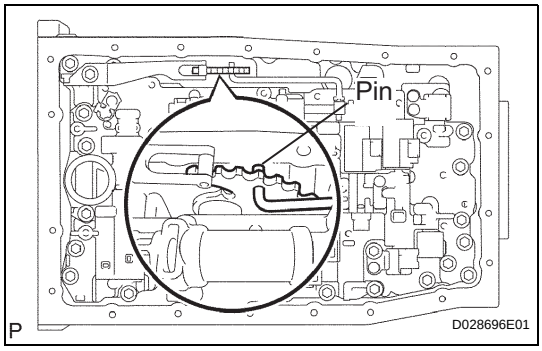

INSTALLATION

1. INSTALL TRANSMISSION VALVE BODY ASSEMBLY

(a) Insert the pin of the lever into the hole of the manual valve.

(b) Install 3 new drum seal gaskets onto the transmission case.

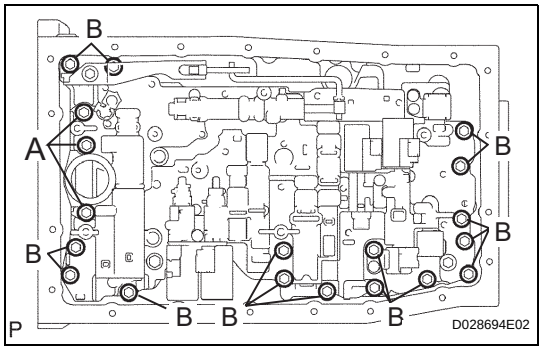

(c) Install the 19 bolts.
Torque: 11 N*m (112 kgf*cm, 8 ft.*lbf)
HINT:
Bolt length:
36 mm (1.42 in.) for bolt A
25 mm (0.98 in.) for bolt B

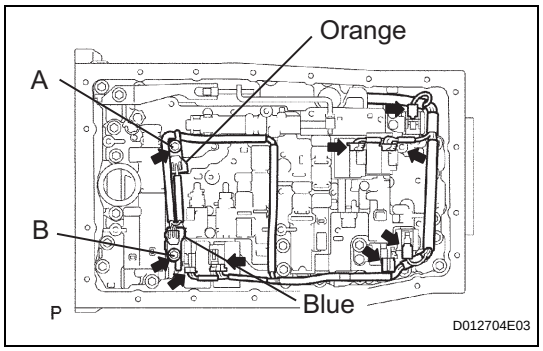

2. CONNECT TRANSMISSION WIRE

(a) Connect the 7 connectors to the solenoid valves.

(b) Install the 2 clamps with the 2 bolts.

Torque: 10 N*m (100 kgf*cm, 7 in.*lbf) for bolt A
11 N*m (112 kgf*cm, 8 ft.*lbf) for bolt B
Bolt length:
12 mm (0.47 in.) for bolt A
36 mm (1.42 in.) for bolt B

(c) Connect the ATF temperature sensor.

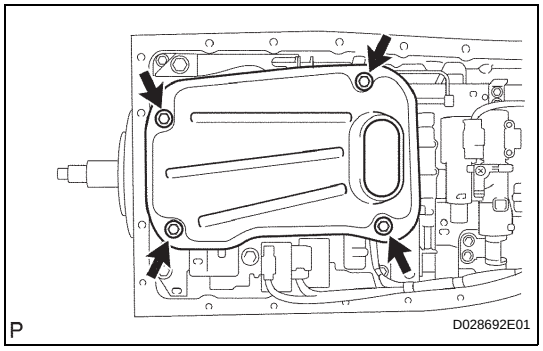

3. INSTALL VALVE BODY OIL STRAINER ASSEMBLY

(a) Install a new O-ring and the oil strainer with the 4 bolts.

Torque: 10 N*m (100 kgf*cm, 7 ft.*lbf)

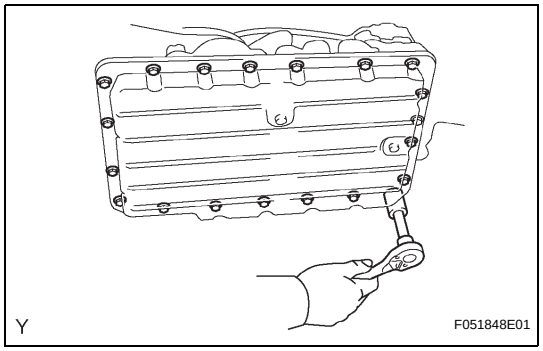

4. INSTALL AUTOMATIC TRANSMISSION OIL PAN SUB-ASSEMBLY

HINT:
Remove the gasket and be careful not to spill oil on the contacting surfaces of the transmission case and oil pan.

(a) Install a new gasket and the oil pan with the 20 bolts.

Torque: 4.4 N*m (45 kgf*cm, 39 in.*lbf)

5. CONNECT CABLE TO NEGATIVE BATTERY TERMINAL

Torque: 3.9 N*m (40 kgf*cm, 35 in.*lbf)

6. PERFORM INITIALIZATION

(See page AT-19)

7. ADJUST AUTOMATIC TRANSMISSION FLUID

(See page AT-147)

SHIFT LOCK SYSTEM

ON-VEHICLE INSPECTION

1. CHECK SHIFT LOCK OPERATION

(a) Shift the shift lever to the P position.
(b) Turn the ignition switch to LOCK.
(c) Check that the shift lever cannot be shifted to any positions other than P.
(d) Turn the ignition switch to ON, depress the brake pedal, and check that the shift lever can be shifted to other positions.

2. CHECK SHIFT LOCK RELEASE LINK OPERATION

(a) Using a small screwdriver, remove the shift lever cap.
(b) When operating the shift lever with the shift lock release link pressed, check that the lever can be shifted to any positions other than P.

3. CHECK KEY INTERLOCK OPERATION

(a) Turn the ignition switch to ON.
(b) Depress the brake pedal and shift the shift lever to any positions other than P.
(c) Check that the ignition key cannot be turned to LOCK.
(d) Shift the shift lever to the P position, turn the ignition key to LOCK, and check that the ignition key can be removed.

4. INSPECT SHIFT LOCK CONTROL ECU SUB-ASSEMBLY

(a) Using a voltmeter, measure the voltage of the connector.
HINT:
Do not disconnect the shift lock control ECU connector.

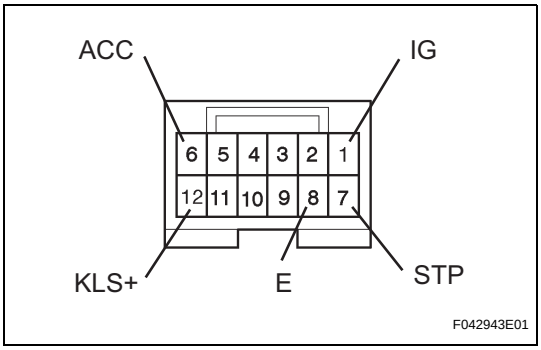

Tester Connection	Condition	Specified Condition(V)
12 (KLS+) - 8 (E)	Ignition switch ACC and P position	0
	Ignition switch ACC and except P position	7.5 to 11
	Ignition switch ACC and except P position (After approx. 1 second)	6 to 9
6 (ACC) - 8 (E)	Ignition switch ON	10 to 14
	Ignition switch ACC	10 to 14
	Ignition switch OFF	0
7 (STP) - 8 (E)	Depress brake pedal	10 to 14
	Release brake pedal	0
1 (IG) - 8 (E)	Ignition switch ON	10 to 14
	Ignition switch OFF	0

AT

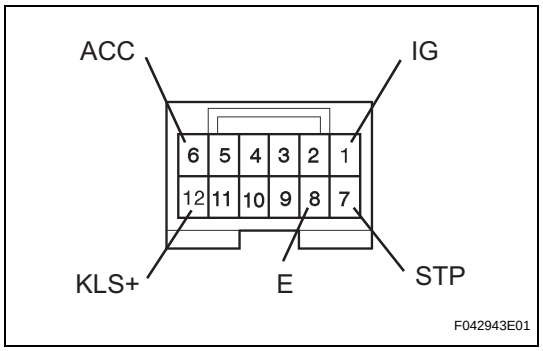

(b) Using an ohmmeter, measure the resistance at terminal E (8) and body ground.
HINT:
Do not disconnect the shift lock control ECU connector.

Tester Connection	Condition	Specified Condition
8 (E) - Body ground	Always	Below 1 Ω

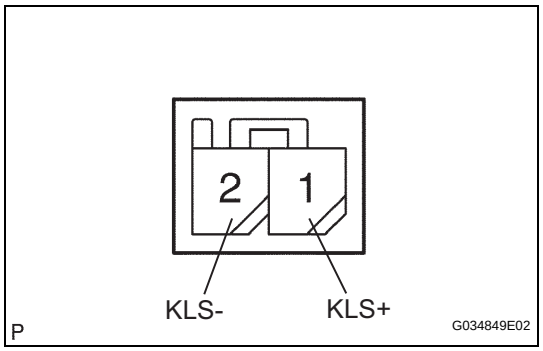

5. INSPECT KEY INTER LOCK SOLENOID

(a) Disconnect the solenoid connector.

(b) Connect KLS+ (1) terminal to the battery positive (+) terminal, and KLS- (2) terminal to the battery negative (-) terminal, and apply about 12 V between KLS+ and KLS- terminals.
Check that operation noise can be heard from the solenoid.
If the solenoid does not operate, replace the solenoid.

AT

FLOOR SHIFT ASSEMBLY

COMPONENTS

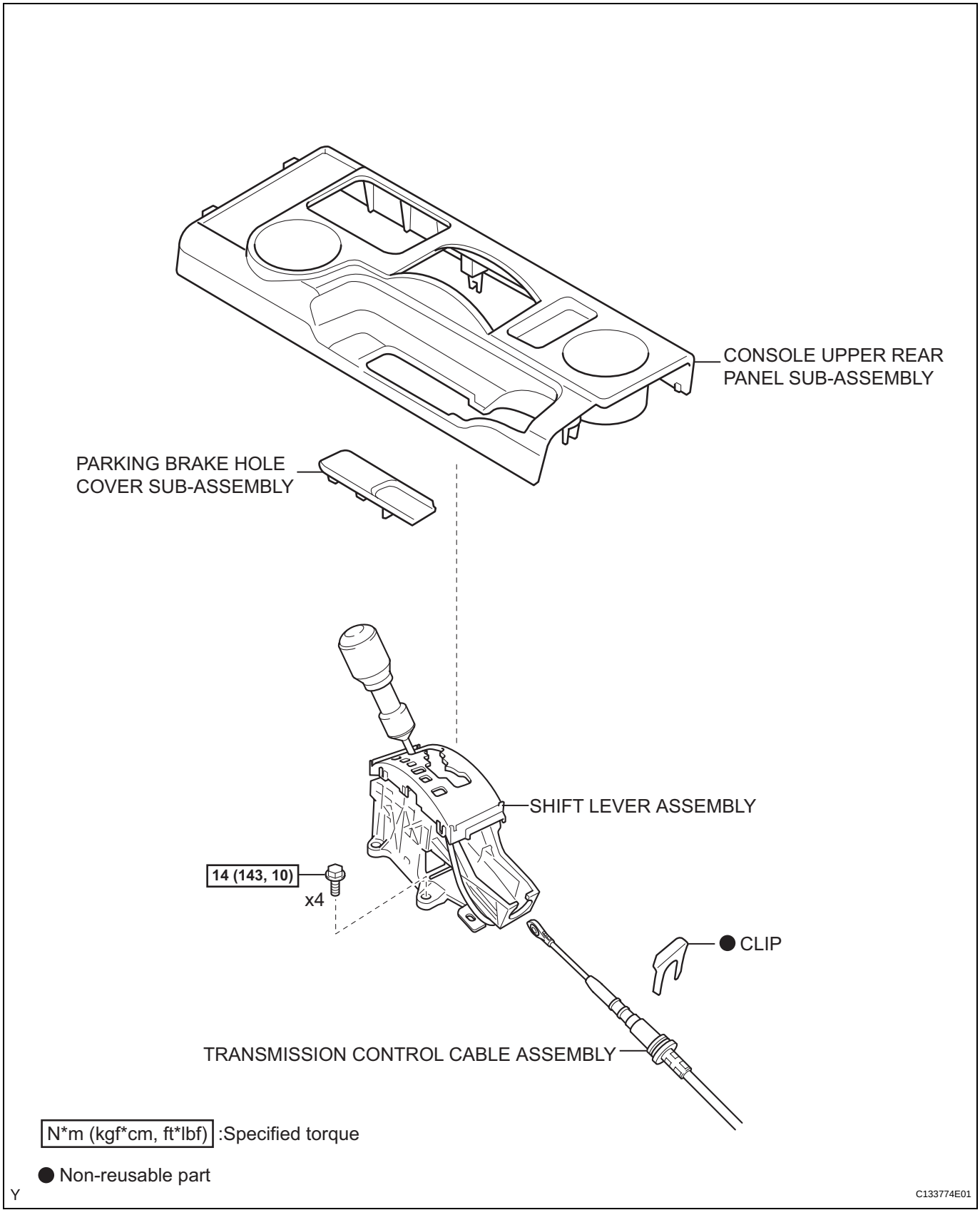

AT

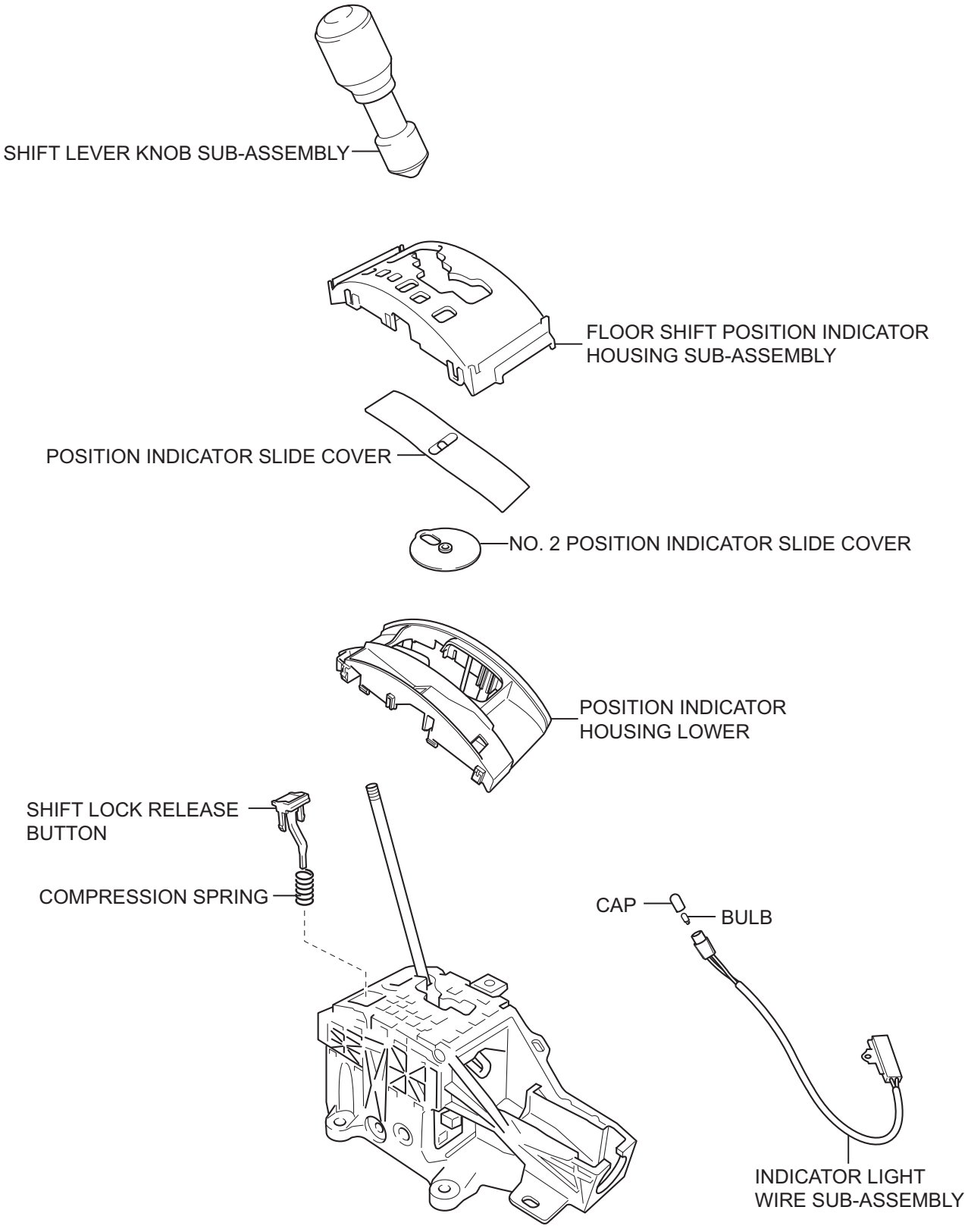

AT

Y

C133773E01

REMOVAL

1. **REMOVE PARKING BRAKE HOLE COVER SUB-ASSEMBLY (See page IP-11)**
2. **REMOVE CONSOLE UPPER REAR PANEL SUB-ASSEMBLY (See page IP-12)**
3. **DISCONNECT TRANSMISSION CONTROL CABLE ASSEMBLY**
   (a) Remove the lock clip and disconnect the control cable from the shift lever.

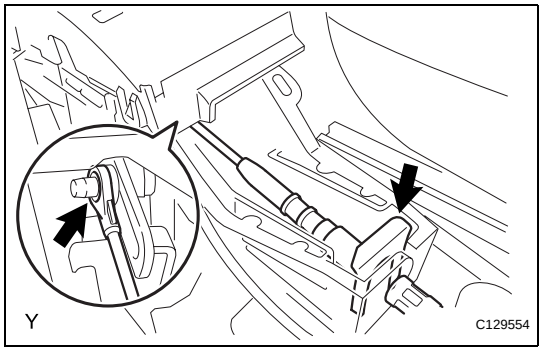

4. **REMOVE SHIFT LEVER ASSEMBLY**
   (a) Disconnect the shift lock control computer connector.
   (b) Disconnect the indicator light connector.
   (c) Remove the 4 bolts and the shift lever assembly.

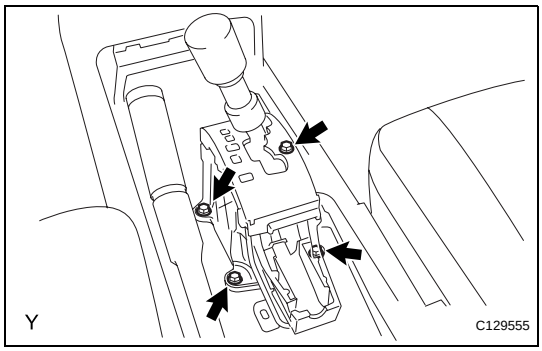

AT

DISASSEMBLY

1. REMOVE SHIFT LEVER KNOB SUB-ASSEMBLY

2. REMOVE FLOOR SHIFT POSITION INDICATOR HOUSING SUB-ASSEMBLY

(a) Disengage the 4 claws and remove the position indicator housing from the shift lever assembly.

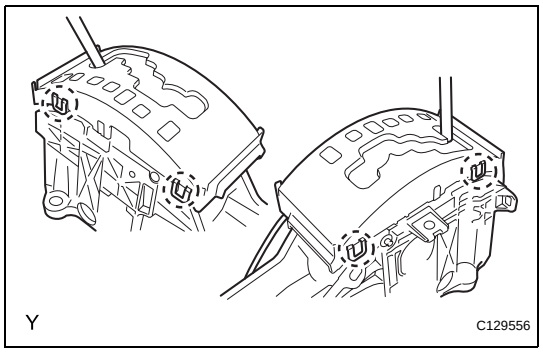

3. REMOVE POSITION INDICATOR SLIDE COVER

4. REMOVE NO. 2 POSITION INDICATOR SLIDE COVER

5. REMOVE POSITION INDICATOR HOUSING LOWER

(a) Disengage the 4 claws and remove the position indicator housing lower from the shift lever assembly.

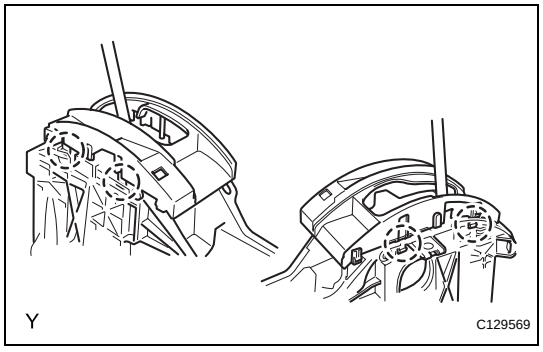

(b) Disconnect the indicator light wire from the position indicator housing lower.

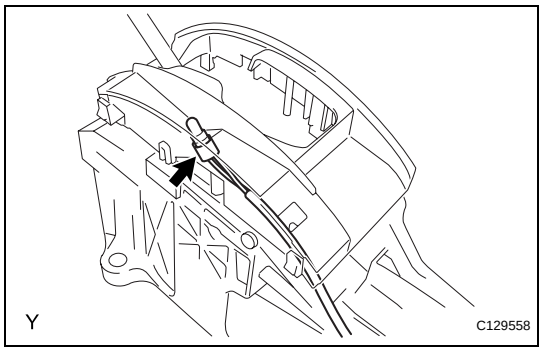

6. REMOVE SHIFT LOCK RELEASE BUTTON

(a) Remove the shift lock release button and compression spring from the shift lever assembly.

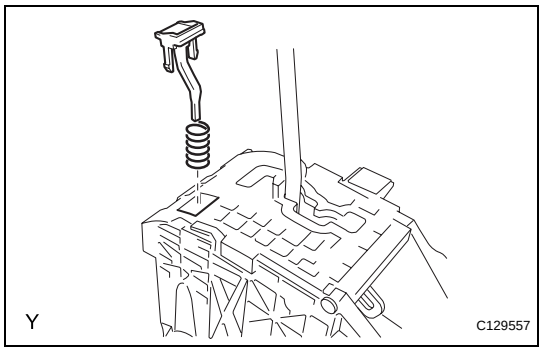

AT

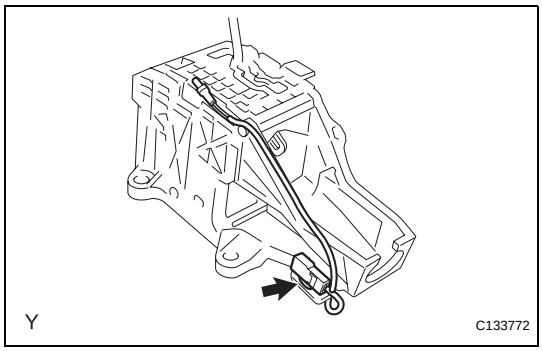

7. REMOVE INDICATOR LIGHT WIRE SUB-ASSEMBLY

(a) Disconnect the indicator light wire from the shift lever assembly.

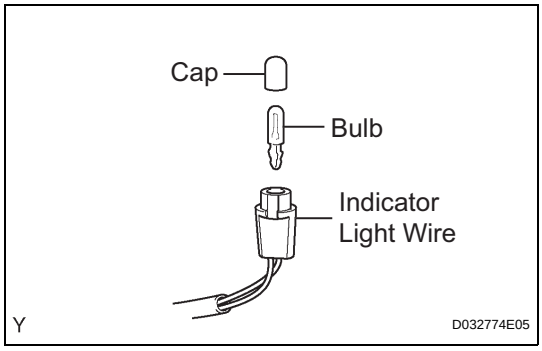

(b) Remove the bulb and cap from the indicator light wire.

ADJUSTMENT

1. INSPECT SHIFT LEVER POSITION

(a) Check that the shift lever moves smoothly and appropriately from the P to the R position, only when the ignition switch is turned to ON and the brake pedal is depressed.

(b) When starting the engine, make sure that the vehicle moves forward when shifting the lever from the N to the D position and moves rearward when shifting the lever to the R position.

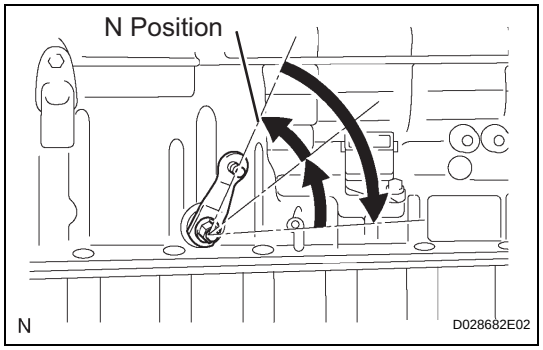

2. ADJUST SHIFT LEVER POSITION

(a) Push the control shaft fully rearward.

(b) Turn the control shaft lever 2 notches counterclockwise to the N position.

(c) Set the shift lever to the N position.

REASSEMBLY

1. INSTALL INDICATOR LIGHT WIRE SUB-ASSEMBLY

(a) Install the bulb and cap onto the indicator light wire.

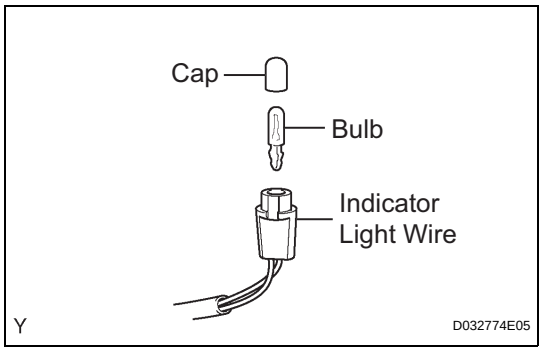

(b) Connect the indicator light wire connector onto the shift lever assembly.

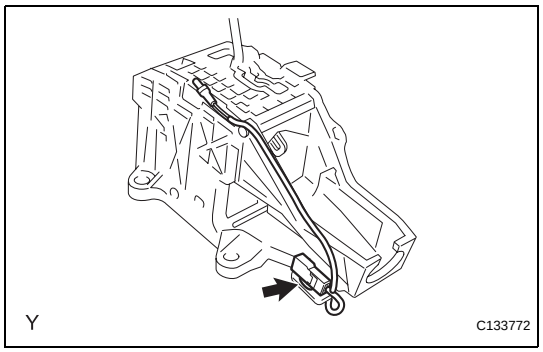

2. INSTALL SHIFT LOCK RELEASE BUTTON

(a) Apply MP grease to the shift lock release button and spring.

(b) Install the shift lock release button and spring onto the shift lever.

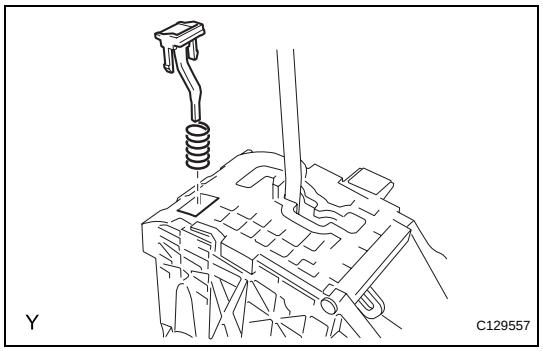

AT

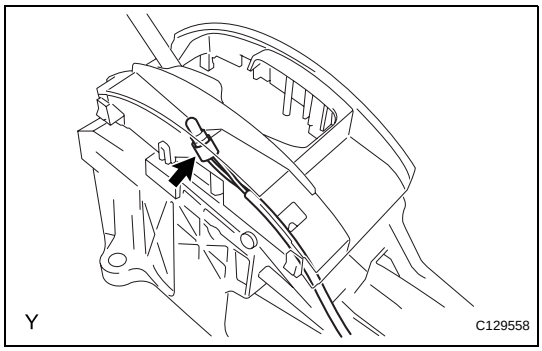

3. INSTALL POSITION INDICATOR HOUSING LOWER

(a) Connect the indicator light wire connector onto the position indicator housing lower.

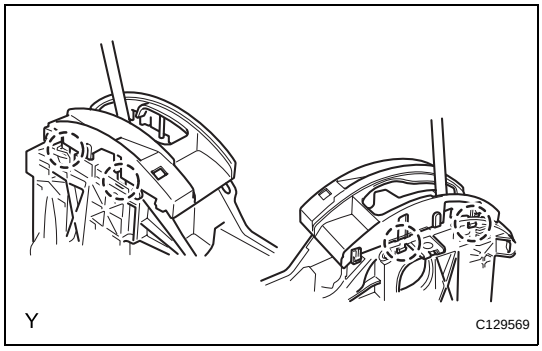

(b) Engage the 4 claws to install the position indicator housing lower.

4. INSTALL NO. 2 POSITION INDICATOR SLIDE COVER

5. INSTALL POSITION INDICATOR SLIDE COVER

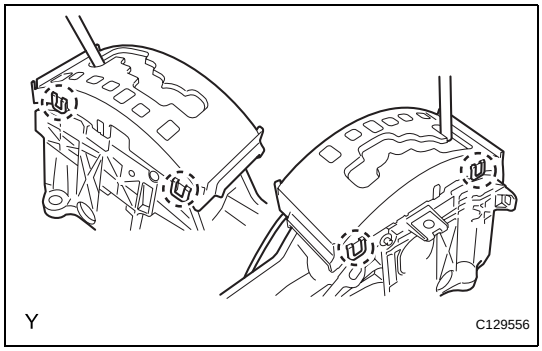

6. INSTALL FLOOR SHIFT POSITION INDICATOR HOUSING SUB-ASSEMBLY

(a) Engage the 4 claws to install the position indicator housing.

7. INSTALL SHIFT LEVER KNOB SUB-ASSEMBLY

INSTALLATION

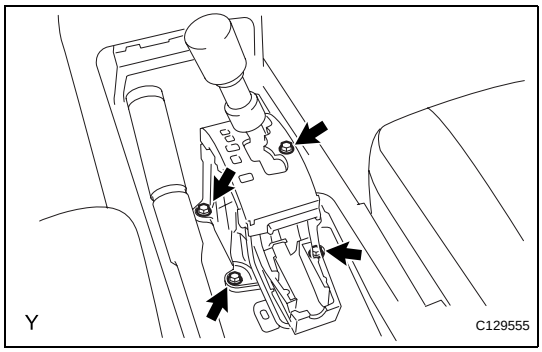

1. INSTALL SHIFT LEVER ASSEMBLY

(a) Install the shift lever with the 4 bolts.
Torque: 14 N*m (143 kgf*cm, 10 ft.*lbf)

(b) Connect the indicator light connector.

(c) Connect the shift lock control computer connector.

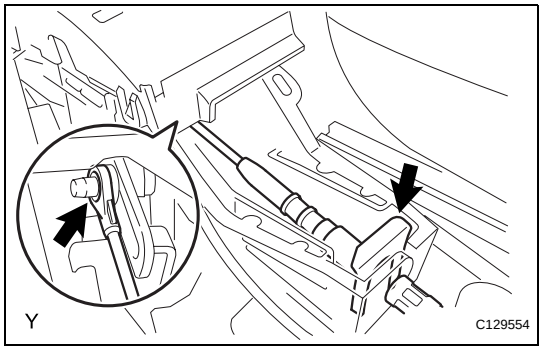

2. CONNECT TRANSMISSION CONTROL CABLE ASSEMBLY

(a) Connect the control cable with the lock clip.

3. INSTALL CONSOLE UPPER REAR PANEL SUB-ASSEMBLY (See page IP-31)

4. INSTALL PARKING BRAKE HOLE COVER SUB-ASSEMBLY (See page IP-32)

5. INSPECT SHIFT LEVER POSITION (See page AT-171)

6. ADJUST SHIFT LEVER POSITION (See page AT-172)

AT

AUTOMATIC TRANSMISSION ASSEMBLY

COMPONENTS

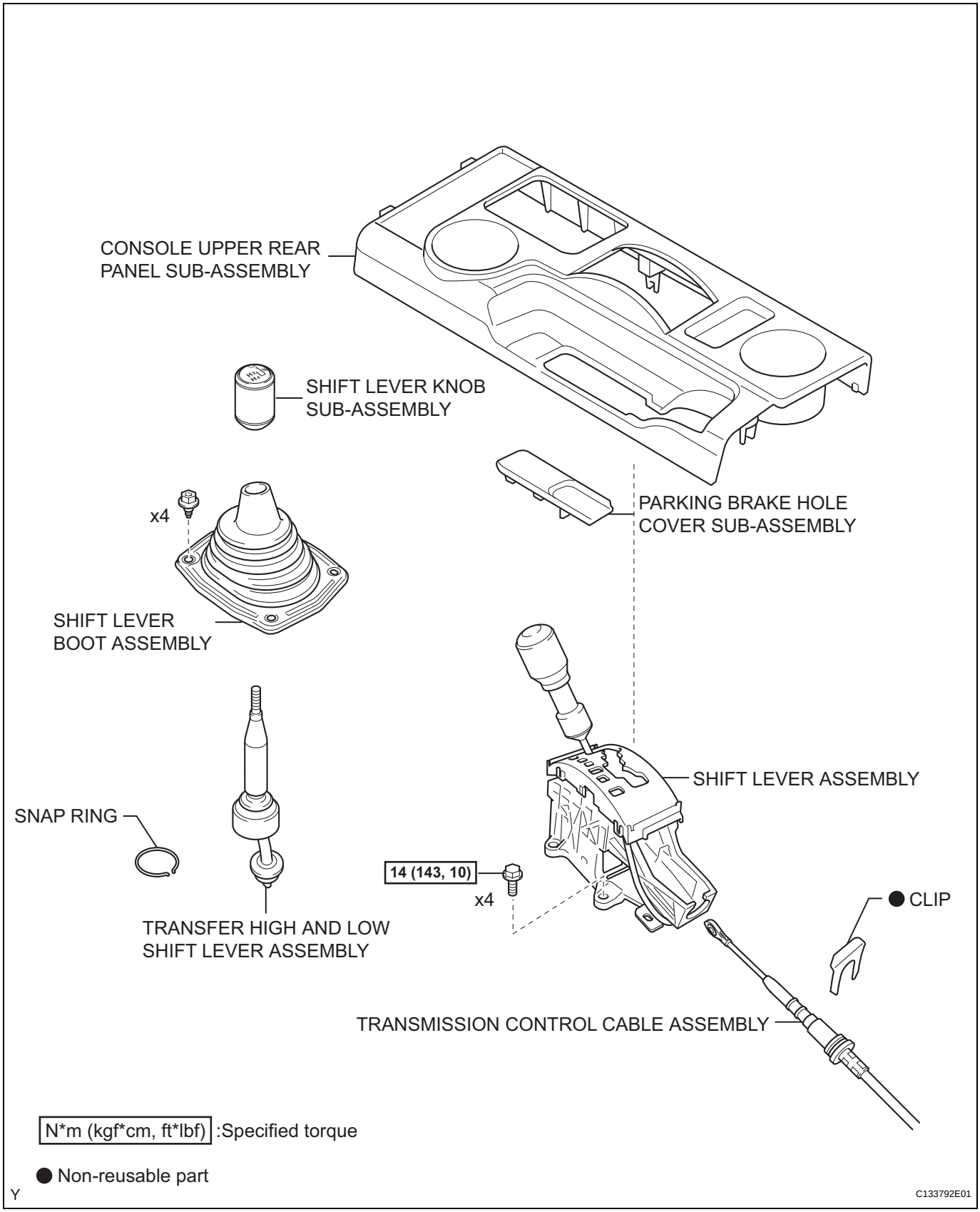

AT

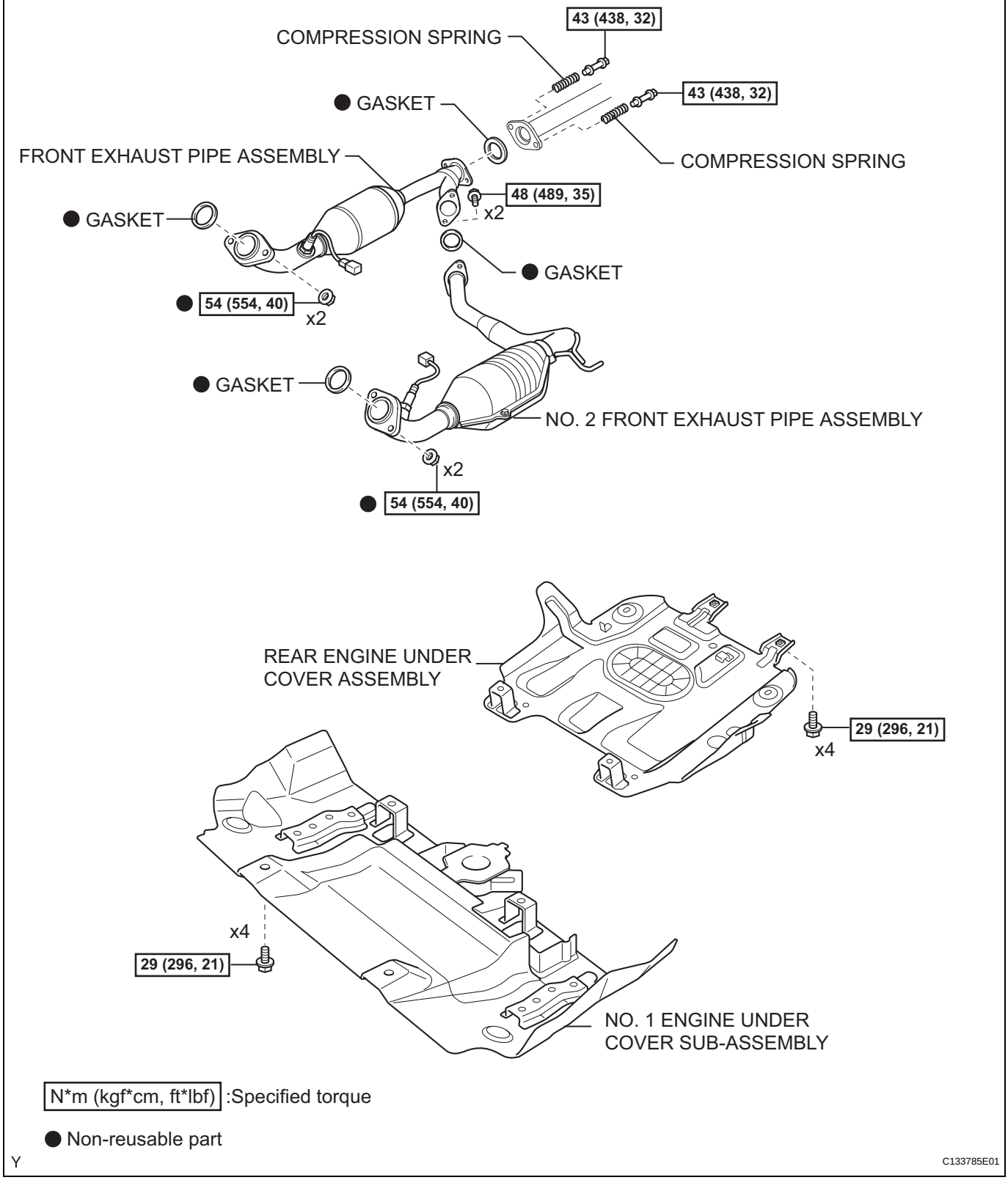
COMPRESSION SPRING
43 (438, 32)
43 (438, 32)
GASKET
FRONT EXHAUST PIPE ASSEMBLY
COMPRESSION SPRING
48 (489, 35)
x2
GASKET
GASKET
54 (554, 40)
x2
GASKET
NO. 2 FRONT EXHAUST PIPE ASSEMBLY
x2
54 (554, 40)
REAR ENGINE UNDER COVER ASSEMBLY
29 (296, 21)
x4
x4
29 (296, 21)
NO. 1 ENGINE UNDER COVER SUB-ASSEMBLY
N*m (kgf*cm, ft*lbf) :Specified torque
Non-reusable part
Y
C133785E01

AT

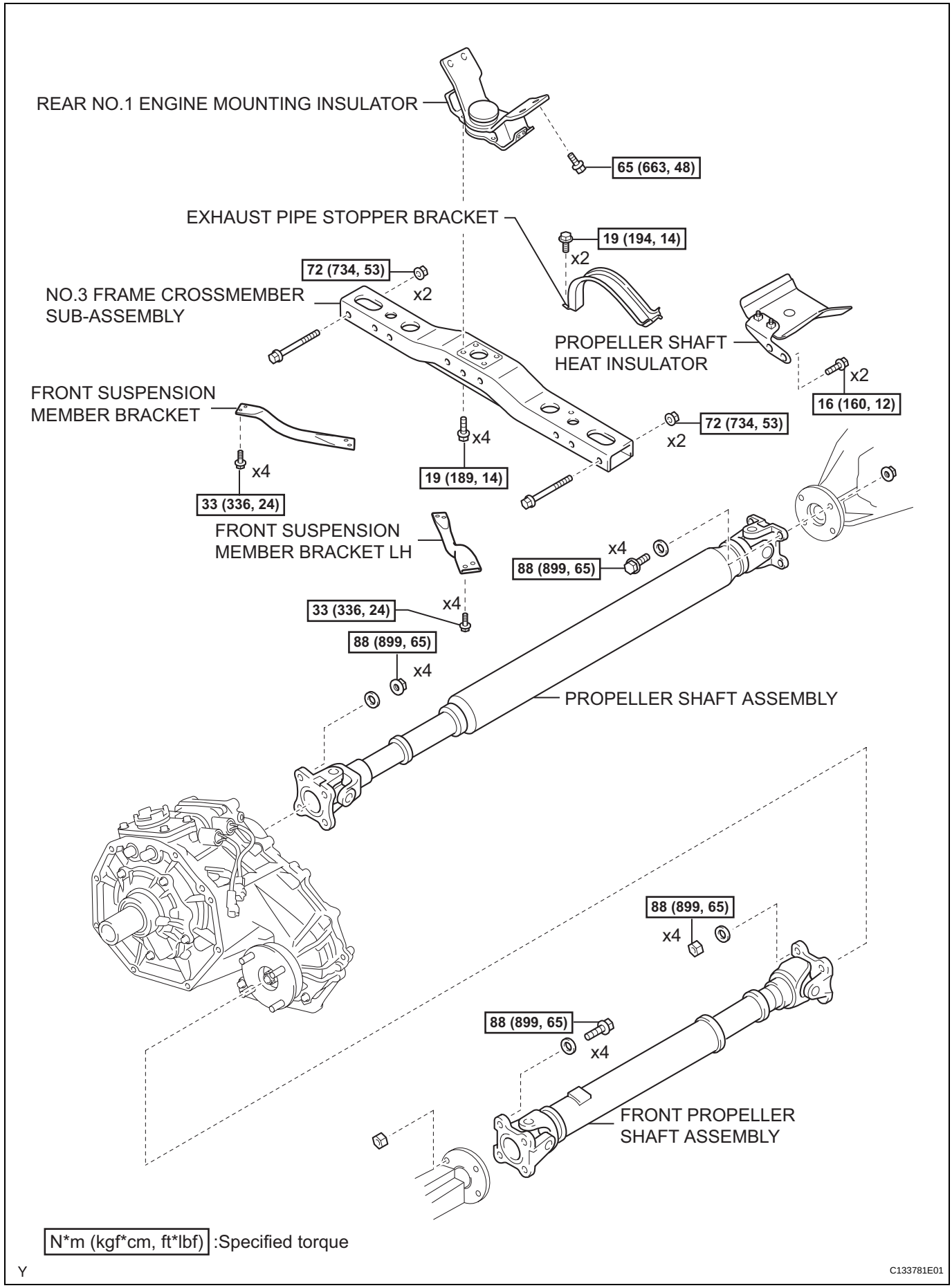

AT

N*m (kgf*cm, ft*lbf) :Specified torque

Y

C133781E01

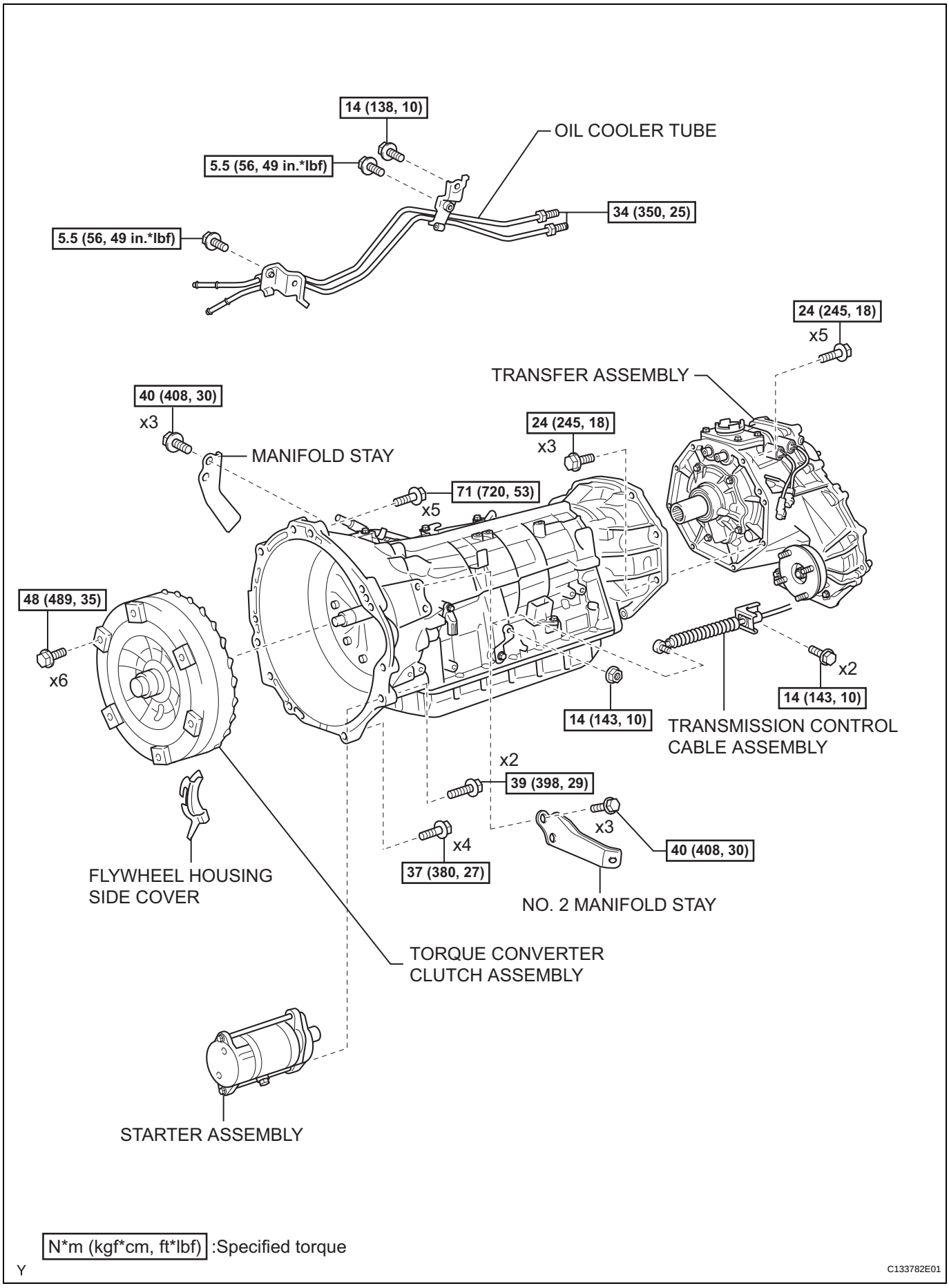

AT

N*m (kgf*cm, ft*lbf) :Specified torque

Y

C133782E01

REMOVAL

1. **REMOVE SHIFT LEVER ASSEMBLY (for Automatic Transmission)**
   (See page AT-170)
2. **REMOVE SHIFT LEVER KNOB SUB-ASSEMBLY (for Transfer)**
3. **REMOVE SHIFT LEVER BOOT ASSEMBLY**
   (a) Remove the 4 screws and shift lever boot.

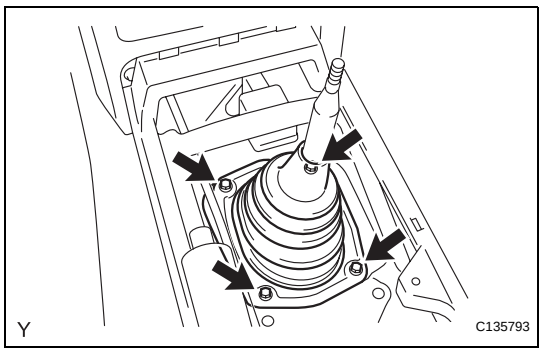

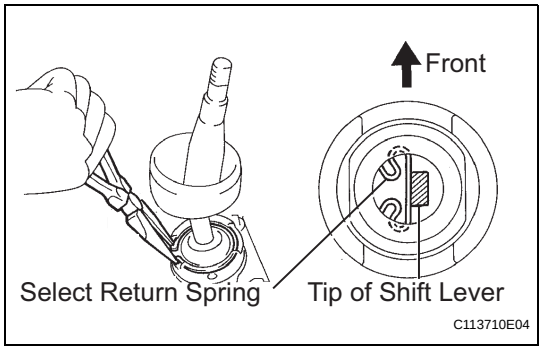

4. **REMOVE TRANSFER HIGH AND LOW SHIFT LEVER ASSEMBLY**
   (a) Using needle-nose pliers, remove the snap ring and pull out the shift lever from the shift lever retainer.
5. **DISCONNECT CABLE FROM NEGATIVE BATTERY TERMINAL**
6. **REMOVE NO. 1 ENGINE UNDER COVER SUB-ASSEMBLY**
7. **REMOVE REAR ENGINE UNDER COVER ASSEMBLY**
8. **DISCONNECT OXYGEN SENSOR**
9. **REMOVE NO. 2 EXHAUST FRONT PIPE ASSEMBLY (See page EX-4)**
10. **REMOVE FRONT EXHAUST PIPE ASSEMBLY (See page EX-4)**

AT

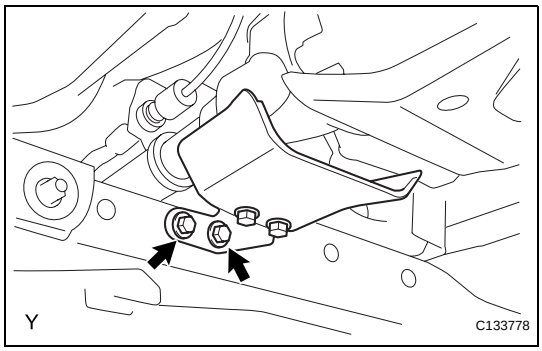

11. **REMOVE PROPELLER SHAFT HEAT INSULATOR**
    (a) Remove the 2 bolts and propeller shaft heat insulator.
12. **REMOVE FRONT PROPELLER SHAFT ASSEMBLY (See page PR-2)**
13. **REMOVE PROPELLER SHAFT ASSEMBLY (See page PR-9)**
14. **DRAIN AUTOMATIC TRANSMISSION FLUID**
    (a) Remove the drain plug and gasket, and drain ATF.
    (b) Install a new gasket and drain plug.
    Torque: 28 N*m (285 kgf*cm, 21 ft.*lbf)

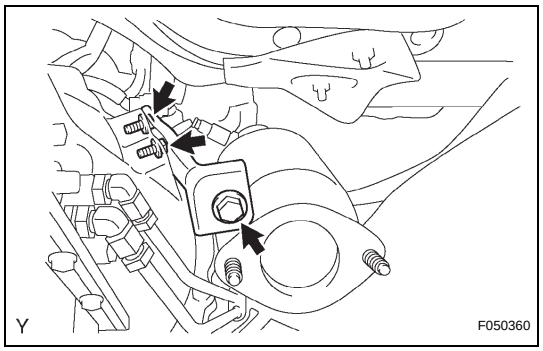

15. REMOVE MANIFOLD STAY

(a) Remove the 3 bolts and the manifold stay.

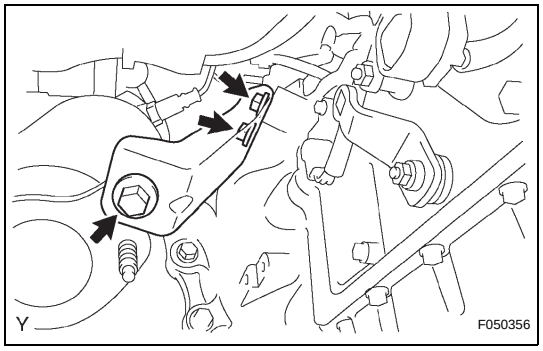

16. REMOVE NO. 2 MANIFOLD STAY

(a) Remove the 3 bolts and the No. 2 manifold stay.

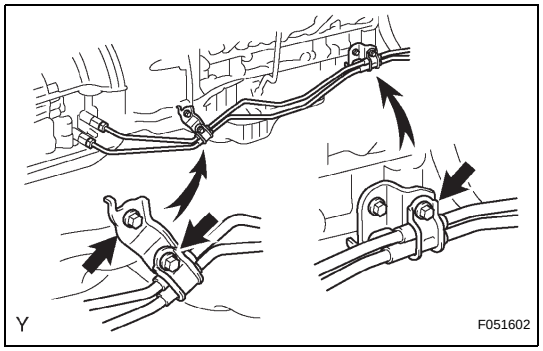

17. DISCONNECT OIL COOLER TUBE

(a) Remove the 3 bolts and 2 clamps.

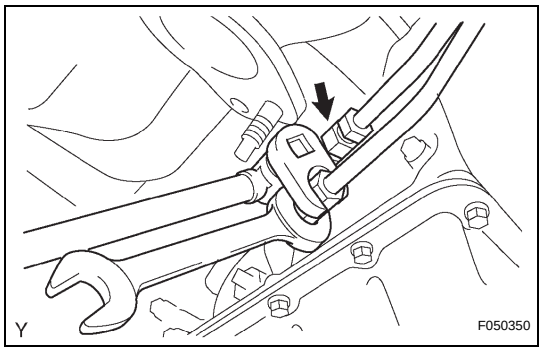

(b) Using SST, disconnect the No. 1 oil cooler inlet tube.
SST 09023-12701

(c) Using SST, disconnect the No. 1 oil cooler outlet tube.
SST 09023-12701

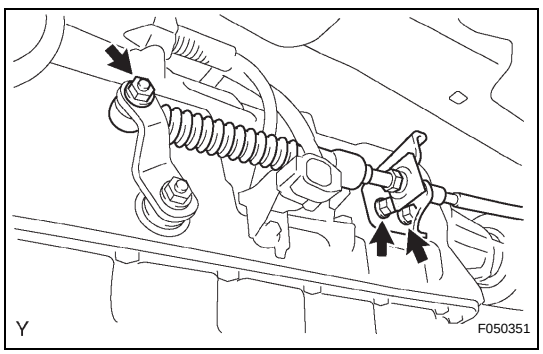

18. DISCONNECT TRANSMISSION CONTROL CABLE ASSEMBLY

(a) Remove the nut and disconnect the transmission control cable.

(b) Remove the 2 bolts and disconnect the transmission control cable.

AT

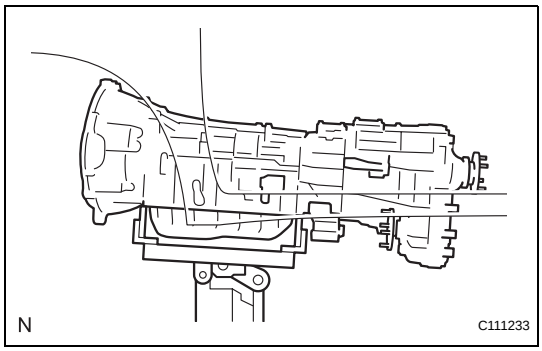

19. SUPPORT AUTOMATIC TRANSMISSION WITH TRANSFER

(a) Support the automatic transmission assembly with a transmission jack.

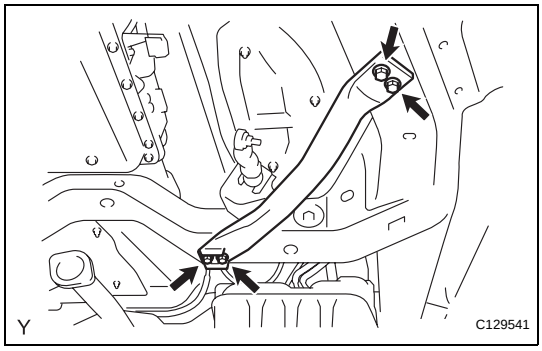

20. REMOVE FRONT SUSPENSION MEMBER BRACKET LH

(a) Remove the 4 bolts and the front suspension member bracket LH.

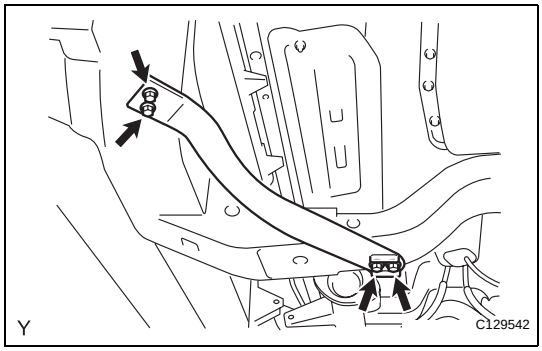

21. REMOVE FRONT SUSPENSION MEMBER BRACKET

(a) Remove the 4 bolts and the front suspension member bracket RH.

AT

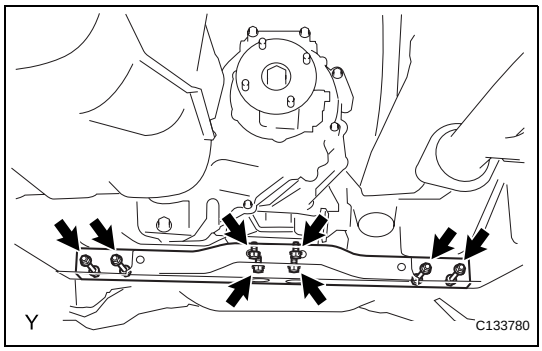

22. REMOVE NO. 3 FRAME CROSSMEMBER SUB-ASSEMBLY

(a) Remove the 4 bolts on the No. 3 frame crossmember sub-assembly.

(b) Remove the 4 nuts, 4 bolts and the No. 3 frame crossmember sub-assembly.

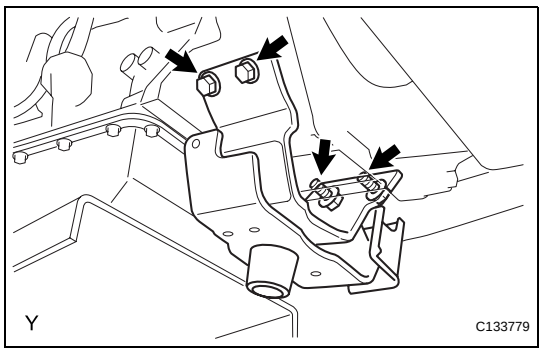

23. REMOVE REAR NO. 1 ENGINE MOUNTING INSULATOR

(a) Remove the 4 bolts and engine mounting insulator rear from the automatic transmission.

24. DISCONNECT CONNECTOR

(a) Disconnect the park/neutral position switch connector.

(b) Disconnect the transmission wire connector.

(c) Disconnect the 2 speed sensor connectors.

(d) Disconnect the 3 indicator switch connectors.

25. DISCONNECT WIRE HARNESS

26. REMOVE STARTER ASSEMBLY (See page ST-7)

27. REMOVE FLYWHEEL HOUSING SIDE COVER

(a) Remove the flywheel housing side cover from the cylinder block.

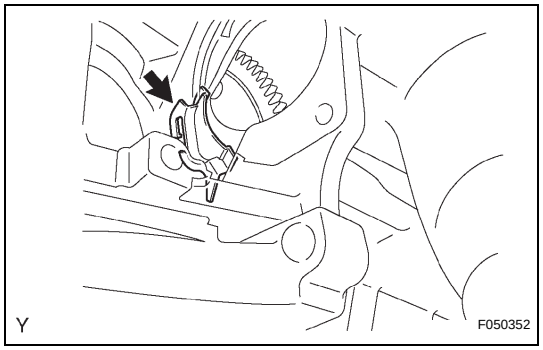

28. REMOVE AUTOMATIC TRANSMISSION WITH TRANSFER

(a) Turn the crankshaft to gain access to each bolt.

(b) Hold the crankshaft pulley nut with a wrench and remove the 6 bolts.

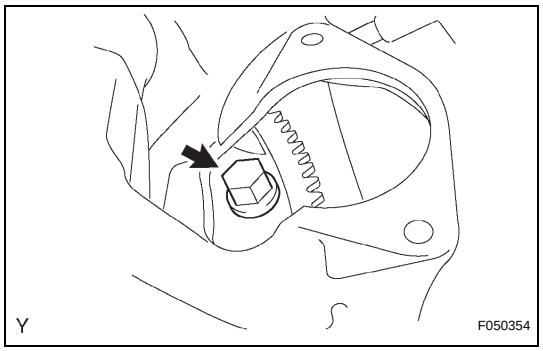

(c) Remove the 9 bolts.

(d) Separate and remove the automatic transmission.

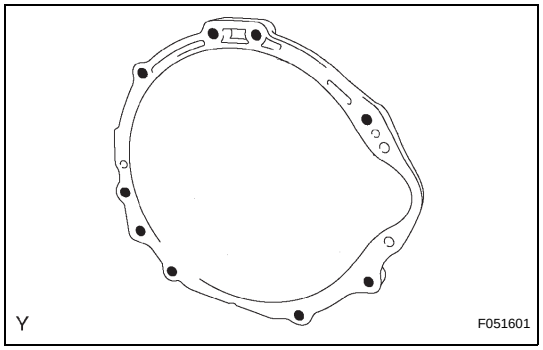

29. REMOVE TORQUE CONVERTER CLUTCH ASSEMBLY

30. REMOVE TRANSFER ASSEMBLY (See page TF-19)

INSTALLATION

1. **INSTALL TRANSFER ASSEMBLY (See page TF-44)**
2. **INSPECT TORQUE CONVERTER CLUTCH ASSEMBLY (See page AT-186)**
3. **INSTALL TORQUE CONVERTER CLUTCH ASSEMBLY**
   (a) Install the torque converter clutch onto the automatic transmission.
   (b) Using calipers and a straight edge, measure dimension A, between the engine and the end surface of the drive plate, shown in the illustration.
   Standard:
   A = 21.2 mm (0.835 in.)

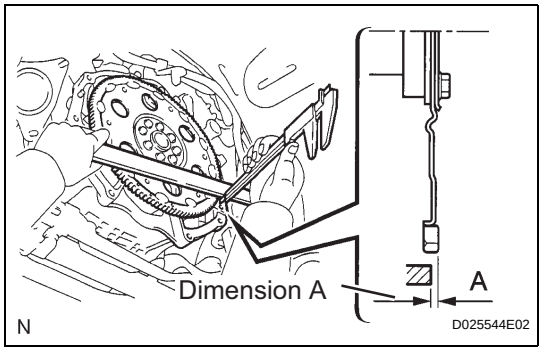

   (c) Using calipers and a straight edge, measure dimension B shown in the illustration. Check that B is greater than A.
   Standard:
   B = A+1.0 mm (0.0394 in.) or more

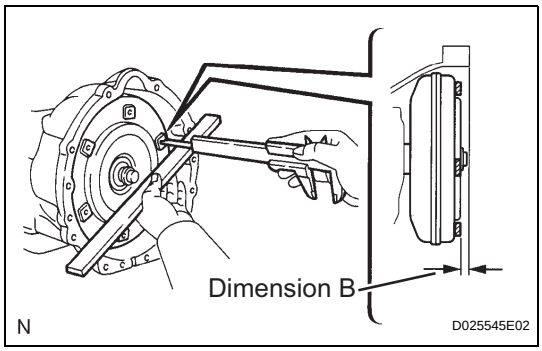

4. **INSTALL AUTOMATIC TRANSMISSION WITH TRANSFER**
   (a) Install the automatic transmission onto the engine with the 9 bolts.
   Torque: 71 N*m (720 kgf*cm, 53 ft.*lbf) for bolt A
   37 N*m (380 kgf*cm, 27 ft.*lbf) for bolt B

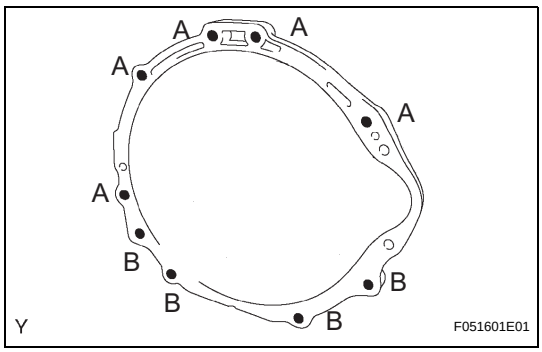

   (b) Install the 6 torque converter clutch mounting bolts.
   Torque: 48 N*m (489 kgf*cm, 35 ft.*lbf)
   HINT:
   First install the black bolt and then the other 5 bolts.

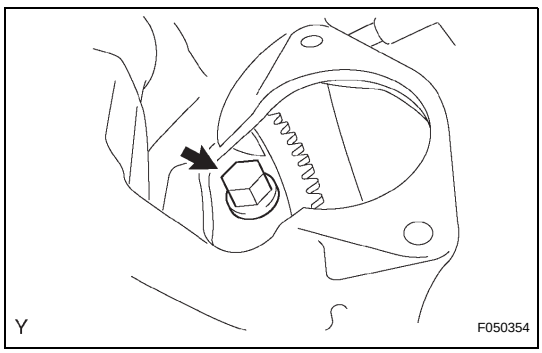

AT

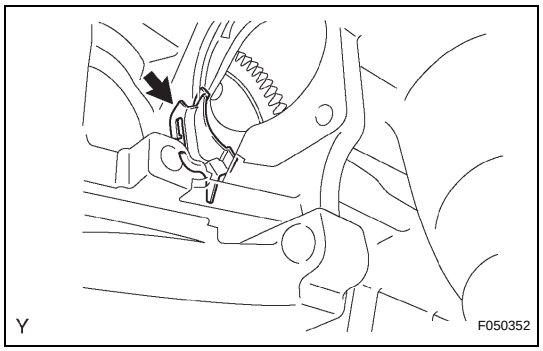

5. INSTALL FLYWHEEL HOUSING SIDE COVER

(a) Install the flywheel housing side cover onto the cylinder block.

6. INSTALL STARTER ASSEMBLY (See page ST-15)

7. CONNECT WIRE HARNESS

8. CONNECT CONNECTOR

(a) Connect the 3 indicator switch connectors.
(b) Connect the 2 speed sensor connectors.
(c) Connect the transmission wire connector.
(d) Connect the park/neutral position switch connector.

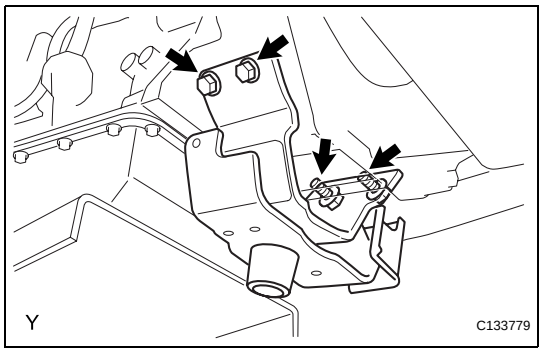

9. INSTALL REAR NO.1 ENGINE MOUNTING INSULATOR

(a) Install the engine mounting insulator rear onto the automatic transmission with the 4 bolts.
Torque: 65 N*m (663 kgf*cm, 48 ft.*lbf)

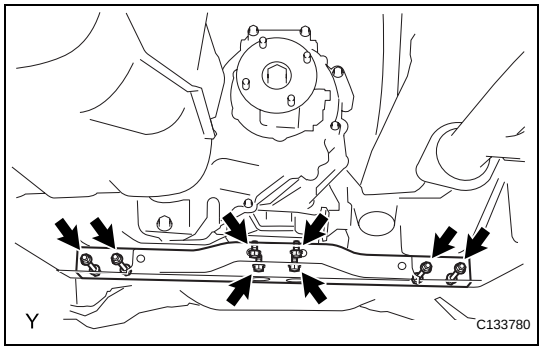

10. INSTALL NO. 3 FRAME CROSSMEMBER SUB-ASSEMBLY

(a) Install the No. 3 frame crossmember sub-assembly with the 4 bolts and 4 nuts.
Torque: 72 N*m (734 kgf*cm, 53 ft.*lbf)
(b) Install the No. 3 frame crossmember sub-assembly with the 4 bolts.
Torque: 19 N*m (189 kgf*cm, 14 ft.*lbf)

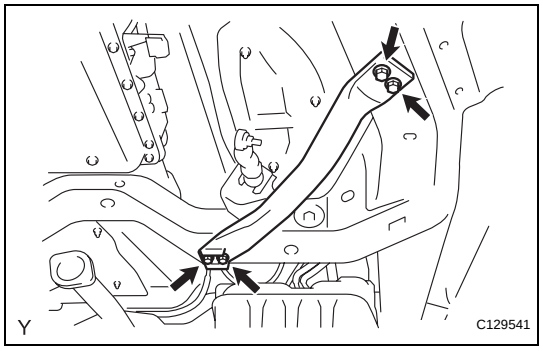

11. INSTALL FRONT SUSPENSION MEMBER BRACKET LH

(a) Install the front suspension member bracket LH with the 4 bolts.
Torque: 33 N*m (336 kgf*cm, 24 ft.*lbf)

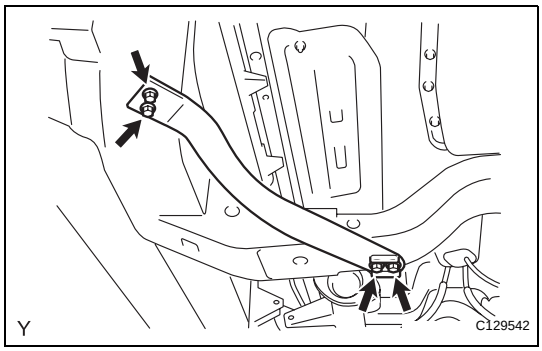

12. INSTALL FRONT SUSPENSION MEMBER BRACKET

(a) Install the front suspension member bracket RH with the 4 bolts.
Torque: 33 N*m (336 kgf*cm, 24 ft.*lbf)

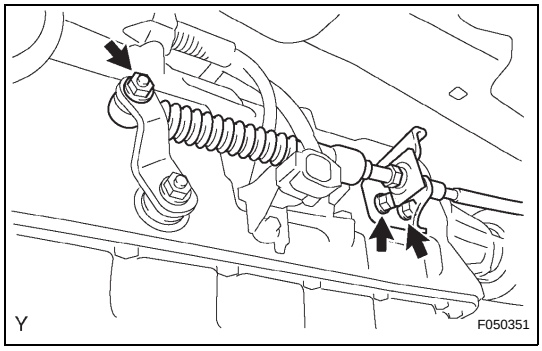

13. INSTALL TRANSMISSION CONTROL CABLE ASSEMBLY

(a) Install the transmission control cable bracket with the 2 bolts.
Torque: 14 N*m (143 kgf*cm, 10 ft.*lbf)

(b) Connect the transmission control cable with the nut.
Torque: 14 N*m (143 kgf*cm, 10 ft.*lbf)

14. INSTALL OIL COOLER TUBE

(a) Provisionally install the No. 1 oil cooler outlet tube.

(b) Provisionally install the No. 1 oil cooler inlet tube.

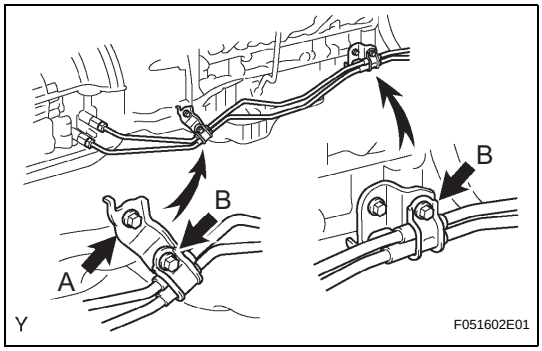

(c) Install the 2 clamps and 2 bolts.
Torque: 14 N*m (138 kgf*cm, 10 ft.*lbf) for bolt A
5.5 N*m (56 kgf*cm, 49 in.*lbf) for bolt B

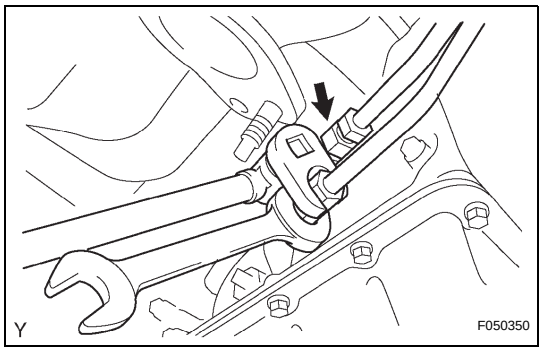

(d) Using SST, tighten the No. 1 oil cooler outlet tube.
SST 09023-12701
Torque: 34 N*m (350 kgf*cm, 25 ft.*lbf) for use without SST
30 N*m (306 kgf*cm, 22 ft.*lbf) for use with SST

HINT:
- Use a torque wrench with a fulcrum length of 300 mm (11.81 in.).
- This torque value is effective when SST is parallel to the torque wrench.

(e) Using SST, tighten the No. 1 oil cooler inlet tube.
SST 09023-12701
Torque: 34 N*m (350 kgf*cm, 25 ft.*lbf) for use without SST
30 N*m (306 kgf*cm, 22 ft.*lbf) for use with SST

HINT:
- Use a torque wrench with a fulcrum length of 300 mm (11.81 in.).
- This torque value is effective when SST is parallel to the torque wrench.

AT

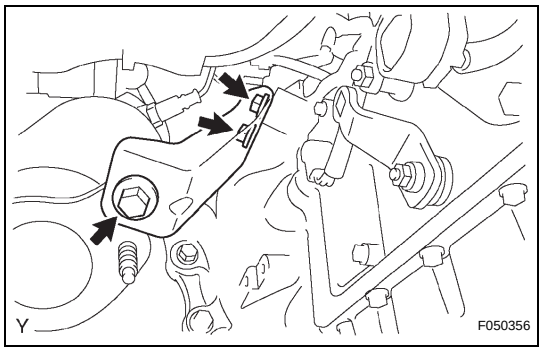

15. **INSTALL NO. 2 MANIFOLD STAY**
    (a) Install No. 2 manifold stay with the 3 bolts.
    Torque: 40 N*m (408 kgf*cm, 30 ft.*lbf)

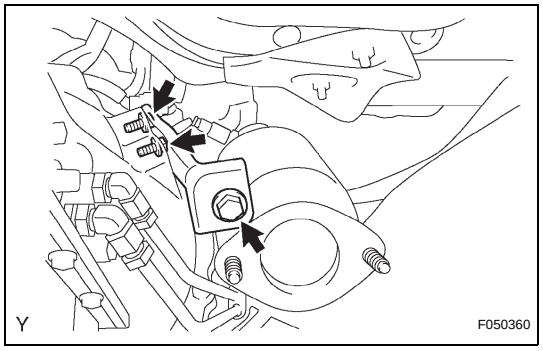

16. **INSTALL MANIFOLD STAY**
    (a) Install the manifold stay with the 3 bolts.
    Torque: 40 N*m (408 kgf*cm, 30 ft.*lbf)

17. **INSTALL PROPELLER SHAFT ASSEMBLY (See page PR-14)**

18. **INSTALL FRONT PROPELLER SHAFT ASSEMBLY (See page PR-6)**

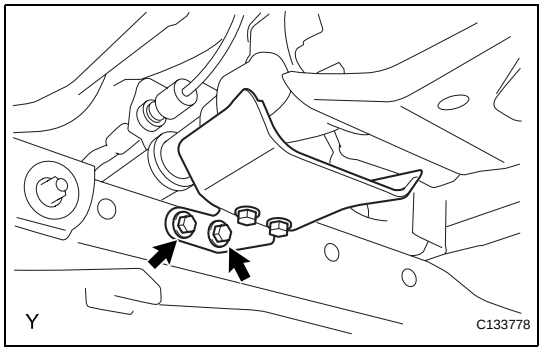

19. **INSTALL PROPELLER SHAFT HEAT INSULATOR**
    (a) Install the propeller shaft heat insulator with the 2 bolts.
    Torque: 16 N*m (160 kgf*cm, 12 ft.*lbf)

20. **INSTALL FRONT EXHAUST PIPE ASSEMBLY (See page EX-4)**

21. **INSTALL NO. 2 EXHAUST FRONT PIPE ASSEMBLY (See page EX-5)**

22. **CONNECT OXYGEN SENSOR**

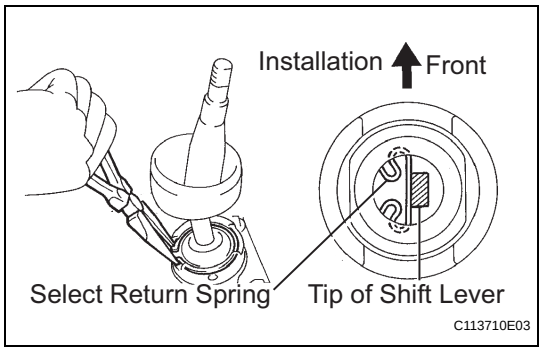

23. **INSTALL TRANSFER HIGH AND LOW SHIFT LEVER ASSEMBLY**
    (a) Install the transfer shift lever onto the shift lever retainer.
    (b) Using needle-nose pliers, install the snap ring.

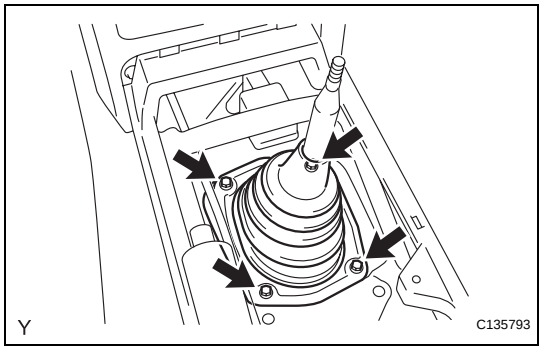

24. **INSTALL SHIFT LEVER BOOT ASSEMBLY**
    (a) Install the shift lever boot with the 4 screws.

25. **INSTALL SHIFT LEVER KNOB SUB-ASSEMBLY (for Transfer)**

26. **INSTALL SHIFT LEVER ASSEMBLY (for Automatic Transmission)**
    (See page AT-173)

AT

27. **CONNECT CABLE TO NEGATIVE BATTERY TERMINAL**
    Torque: 3.9 N*m (40 kgf*cm, 35 in.*lbf)
28. **PERFORM INITIALIZATION**
    (See page AT-19)
29. **ADJUST AUTOMATIC TRANSMISSION FLUID**
    (See page AT-147)
30. **INSPECT SHIFT LEVER POSITION (See page AT-171)**
31. **ADJUST SHIFT LEVER POSITION (See page AT-172)**
32. **CHECK FOR EXHAUST GAS LEAKAGE**
33. **INSTALL REAR ENGINE UNDER COVER ASSEMBLY**
34. **INSTALL NO. 1 ENGINE UNDER COVER SUB-ASSEMBLY**

TORQUE CONVERTER CLUTCH AND DRIVE PLATE

INSPECTION

1. INSPECT TORQUE CONVERTER CLUTCH ASSEMBLY

(a) Inspect the one-way clutch.

(1) Install SST in the inner race of the one-way clutch.

SST 09350-32014 (09351-32020)

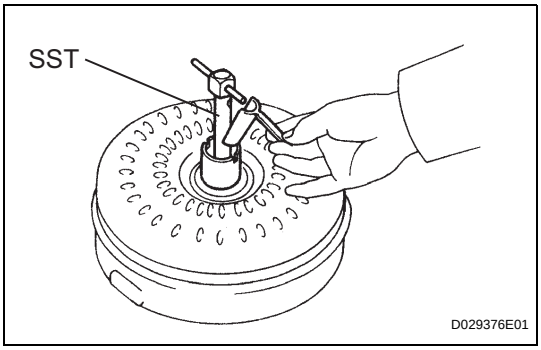

(2) Press on the serrations of the starter with a finger and rotate it.

Check if it rotates smoothly when turned clockwise and locks when turned counterclockwise.

If the results are not as specified, clean the converter and recheck the one-way clutch. If the results still are not as specified, replace the converter

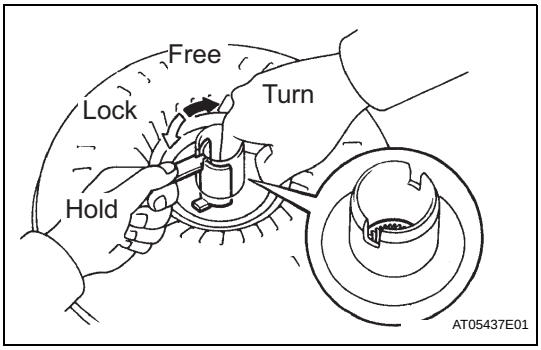

(b) Determine the condition of the torque converter clutch.

(1) Check that the following conditions are met:

- During the stall test or when the shift lever is in N, metallic sounds are not emitted from the torque converter clutch.
- The one-way clutch turns in one direction and locks in the other direction.
- The amount of powder in the ATF is not greater than the sample shown in the illustration.

If the results are not as specified, replace the torque converter clutch assembly.

HINT:

The sample illustration shows approximately 0.25 liters (0.26 US qts, 0.22 Imp. qts) of the ATF taken from a removed torque converter clutch.

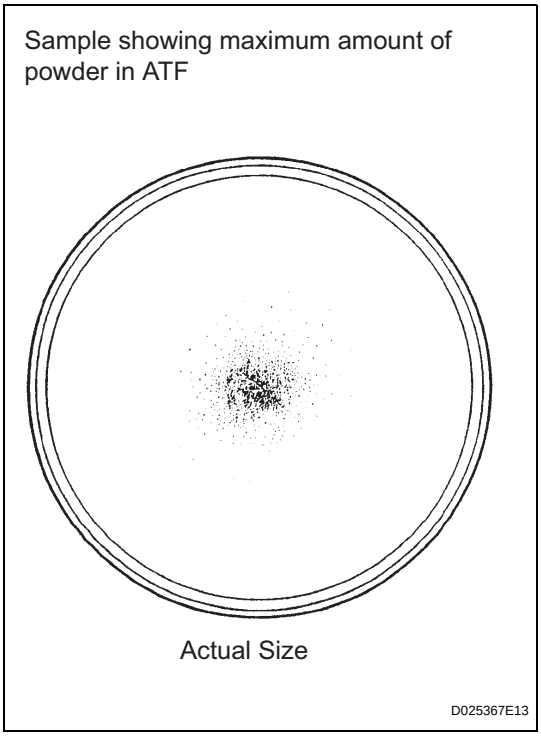

(c) Replace the ATF in the torque converter clutch.

(1) If the ATF is discolored and/or has a foul odor, stir the ATF in the torque converter clutch thoroughly and drain the ATF with the torque converter facing up.

AT

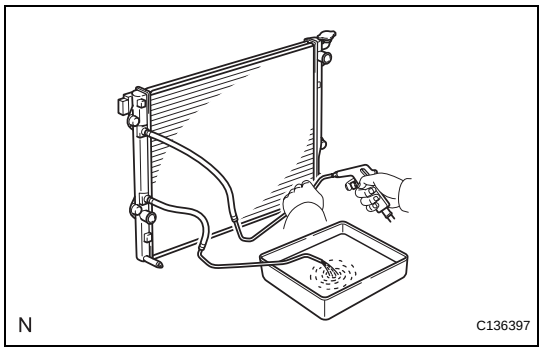

(d) Clean and check the oil cooler and oil pipe line.
(1) If the torque converter clutch is inspected or the ATF is replaced, clean the oil cooler and oil pipe line.
HINT:
- Apply compressed air of 196 kPa (2 kgf/cm^2, 28 psi) into the inlet hose.
- If a large amount of powder is found in the ATF, add new ATF using a bucket pump and clean the oil cooler and oil pipe line again.

(2) If the ATF is cloudy, inspect the oil cooler (radiator).

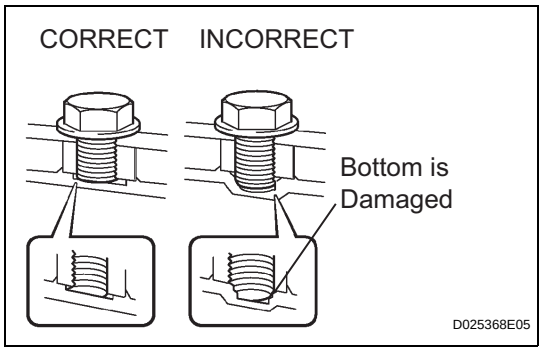

(e) Prevent deformation of the torque converter clutch and damage to the oil pump gear.
(1) When any marks due to interference are found on the end of the bolt for the torque converter clutch and on the bottom of the bolt hole, replace the bolt and torque converter clutch.
(2) All of the bolts should be the same length.
(3) Make sure no spring washers are missing.

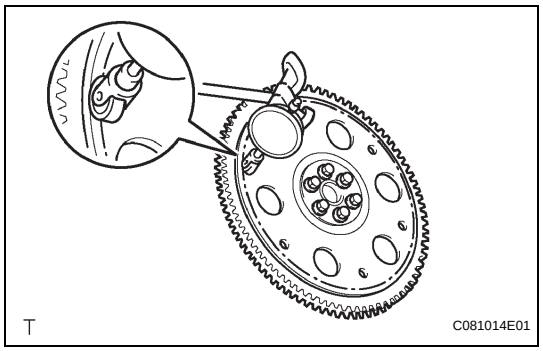

2. INSPECT RUNOUT OF DRIVE PLATE AND RING GEAR

(a) Set up a dial indicator and measure the drive plate runout.
Maximum runout:
0.20 mm (0.0079 in.)
If the runout is greater than the maximum or if the ring gear is damaged, replace the drive plate. If installing a new drive plate, note the orientation of the spacers and tighten the bolts.
Torque: 83 N*m (846 kgf*cm, 61 ft.*lbf)

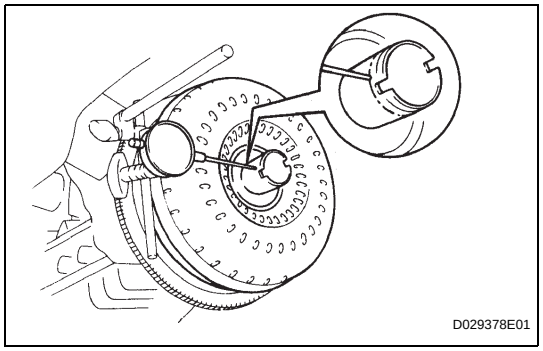

3. INSPECT RUNOUT OF TORQUE CONVERTER CLUTCH ASSEMBLY

(a) Temporarily mount the torque converter clutch to the drive plate. Set up a dial indicator.
Maximum runout:
0.30mm (0.0118 in.)
If the runout is greater than the maximum, try to correct it by changing the installation direction of the torque converter clutch.
If the runout cannot be corrected, replace the torque converter clutch.
HINT:
Mark the position of the torque converter clutch so that it can be installed correctly later.

(b) Remove the torque converter clutch.

AT

TRANSMISSION CONTROL CABLE

COMPONENTS

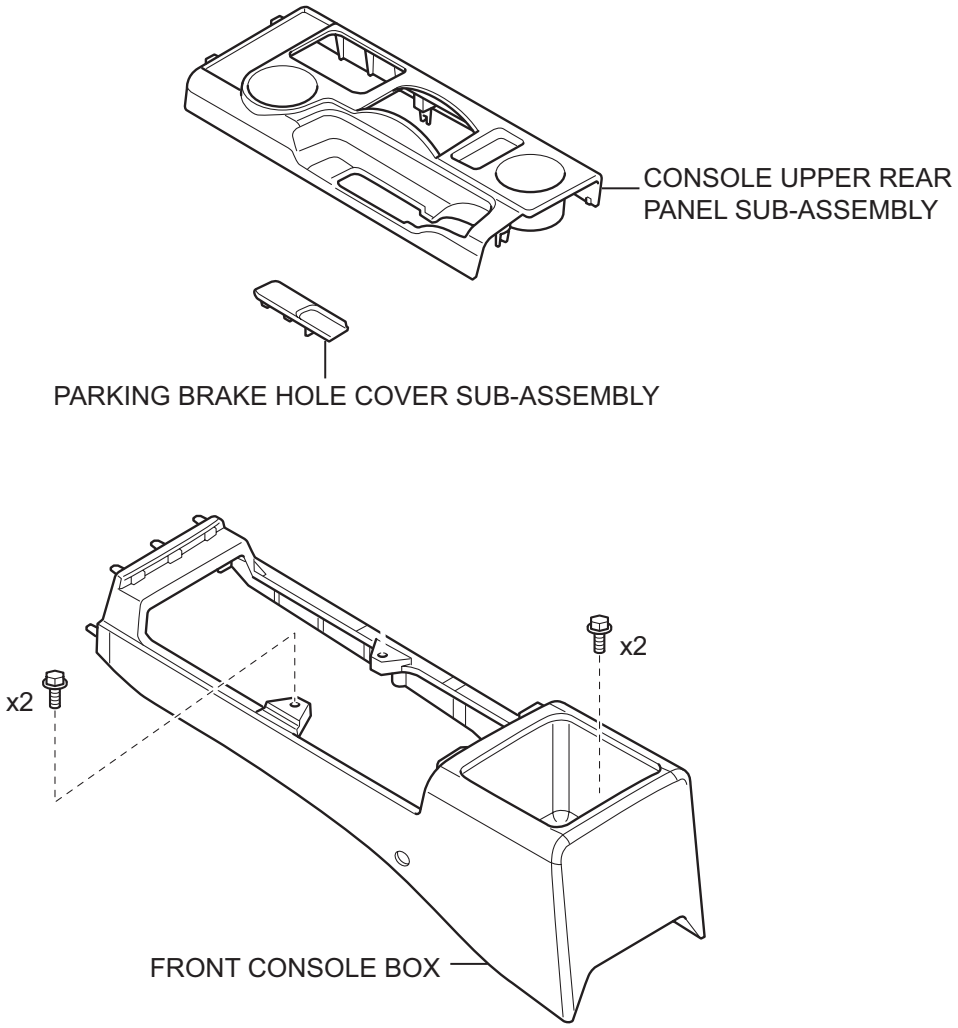

AT

Y

C135796E01

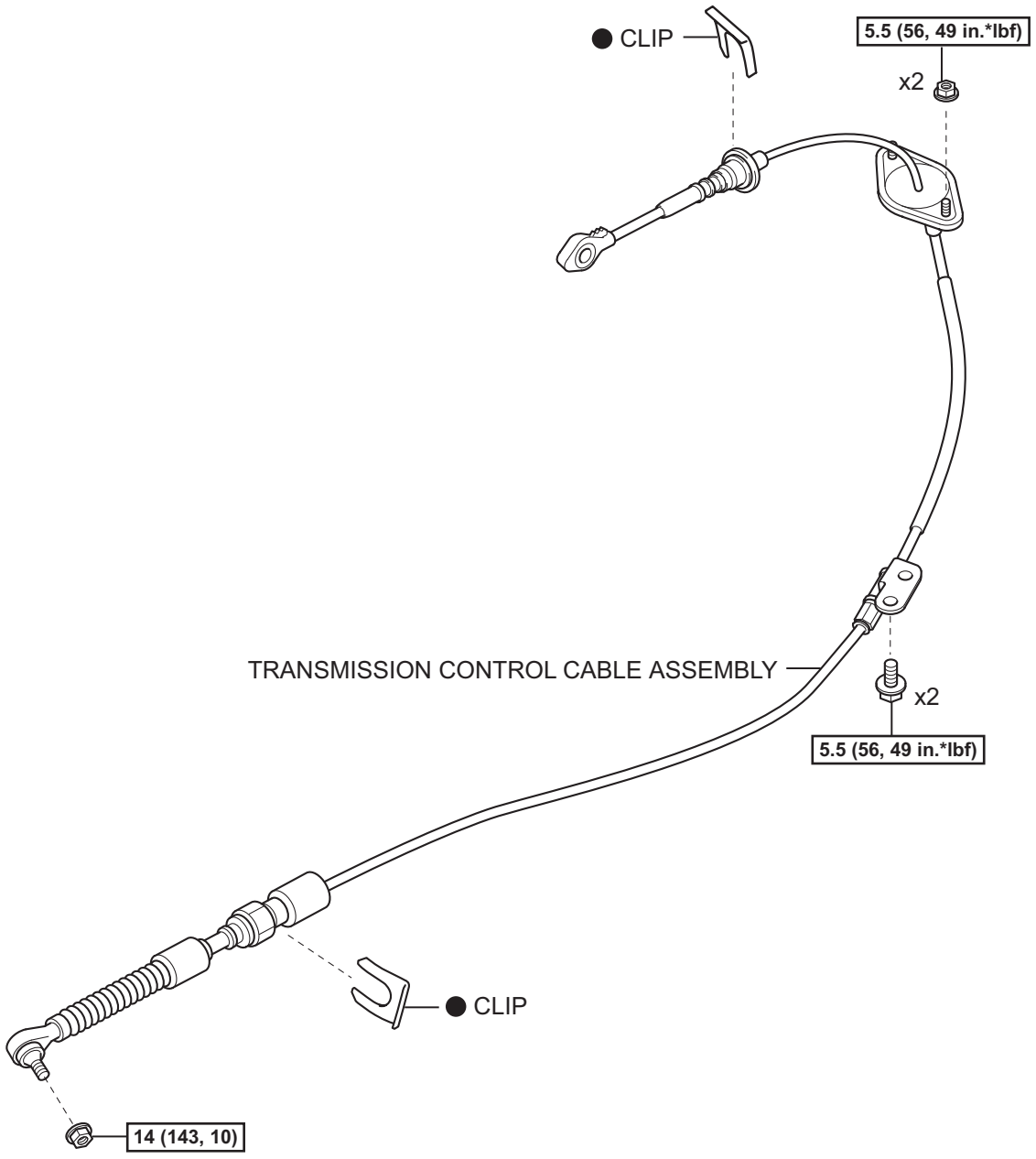

N*m (kgf*cm, ft*lbf) :Specified torque

● Non-reusable part

Y

C133775E01

AT

REMOVAL

1. **REMOVE PARKING BRAKE HOLE COVER SUB-ASSEMBLY (See page IP-11)**
2. **REMOVE CONSOLE UPPER REAR PANEL SUB-ASSEMBLY (See page IP-12)**
3. **REMOVE FRONT CONSOLE BOX (See page IP-12)**
4. **REMOVE TRANSMISSION CONTROL CABLE ASSEMBLY**

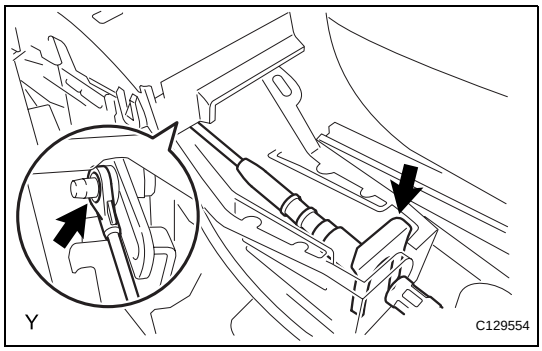

(a) Remove the lock clip and disconnect the control cable from the shift lever.

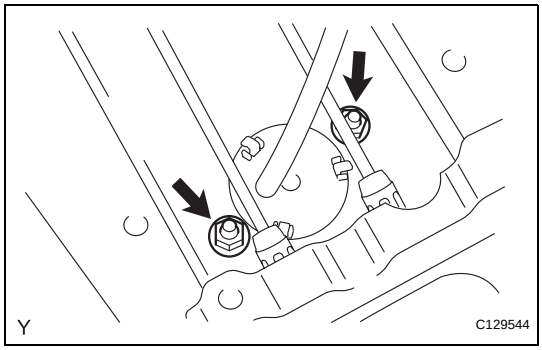

(b) Remove the 2 nuts and disconnect the control cable from the vehicle body.

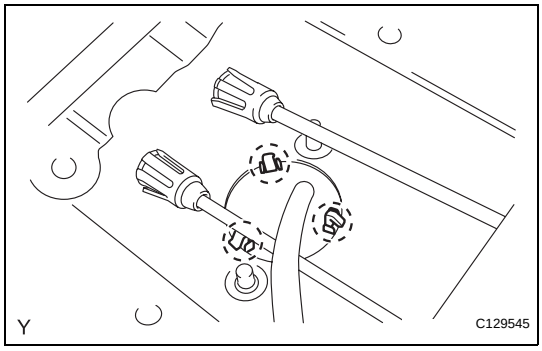

(c) Disengage the 3 claws and disconnect the control cable.

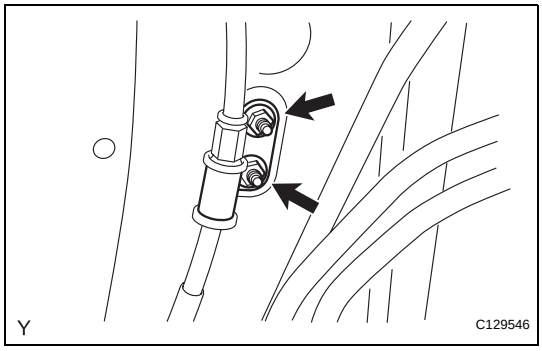

(d) Remove the 2 nuts and disconnect the control cable from the vehicle body.

AT

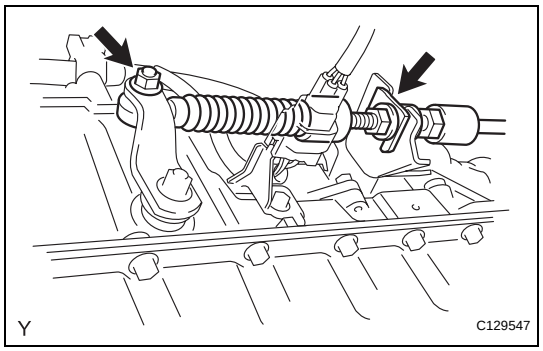

(e) Remove the nut and clip then disconnect the control cable.

INSTALLATION

1. INSTALL TRANSMISSION CONTROL CABLE ASSEMBLY

(a) Connect the control cable to the transmission with the nut and a new clip.
Torque: 14 N*m (143 kgf*cm, 10 ft.*lbf)

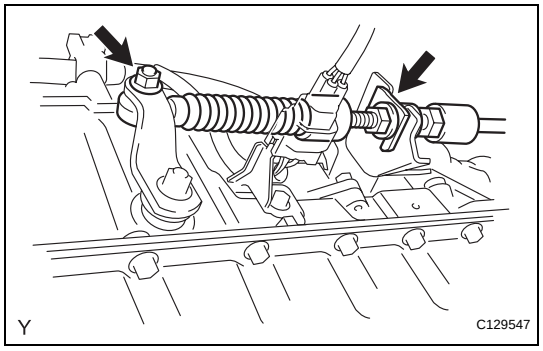

(b) Connect the control cable to the body with the 2 nuts.
Torque: 5.5 N*m (56 kgf*cm, 49 in.*lbf)

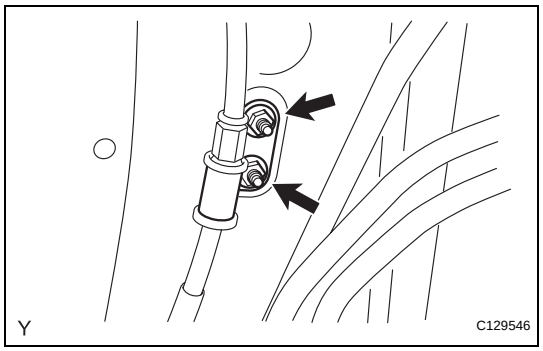

(c) Engage the 3 claws to connect the control cable.

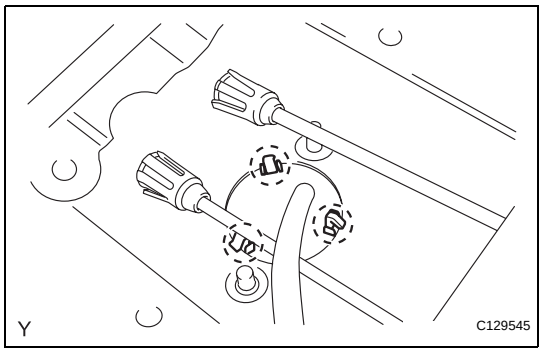

(d) Connect the control cable to the body with the 2 nuts.
Torque: 5.5 N*m (56 kgf*cm, 49 in.*lbf)

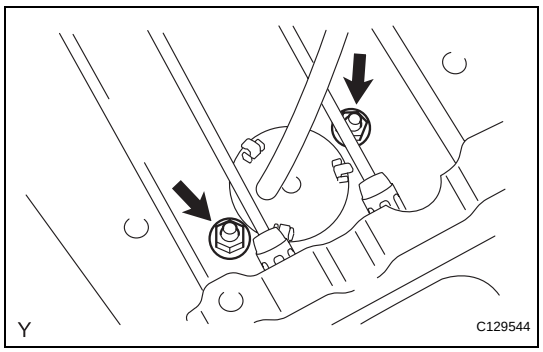

AT

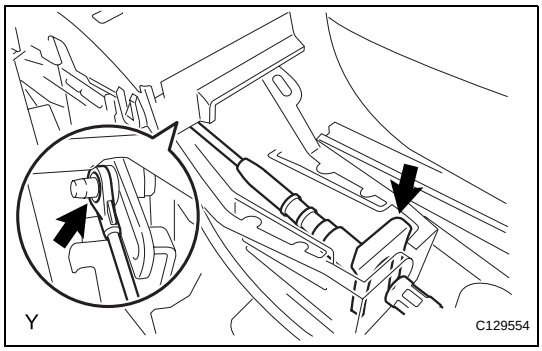

(e) Connect the control cable with a new lock clip.

2. **REMOVE FRONT CONSOLE BOX (See page IP-31)**
3. **REMOVE CONSOLE UPPER REAR PANEL SUB-ASSEMBLY (See page IP-31)**
4. **REMOVE PARKING BRAKE HOLE COVER SUB-ASSEMBLY (See page IP-32)**

AUTOMATIC TRANSMISSION UNIT

COMPONENTS

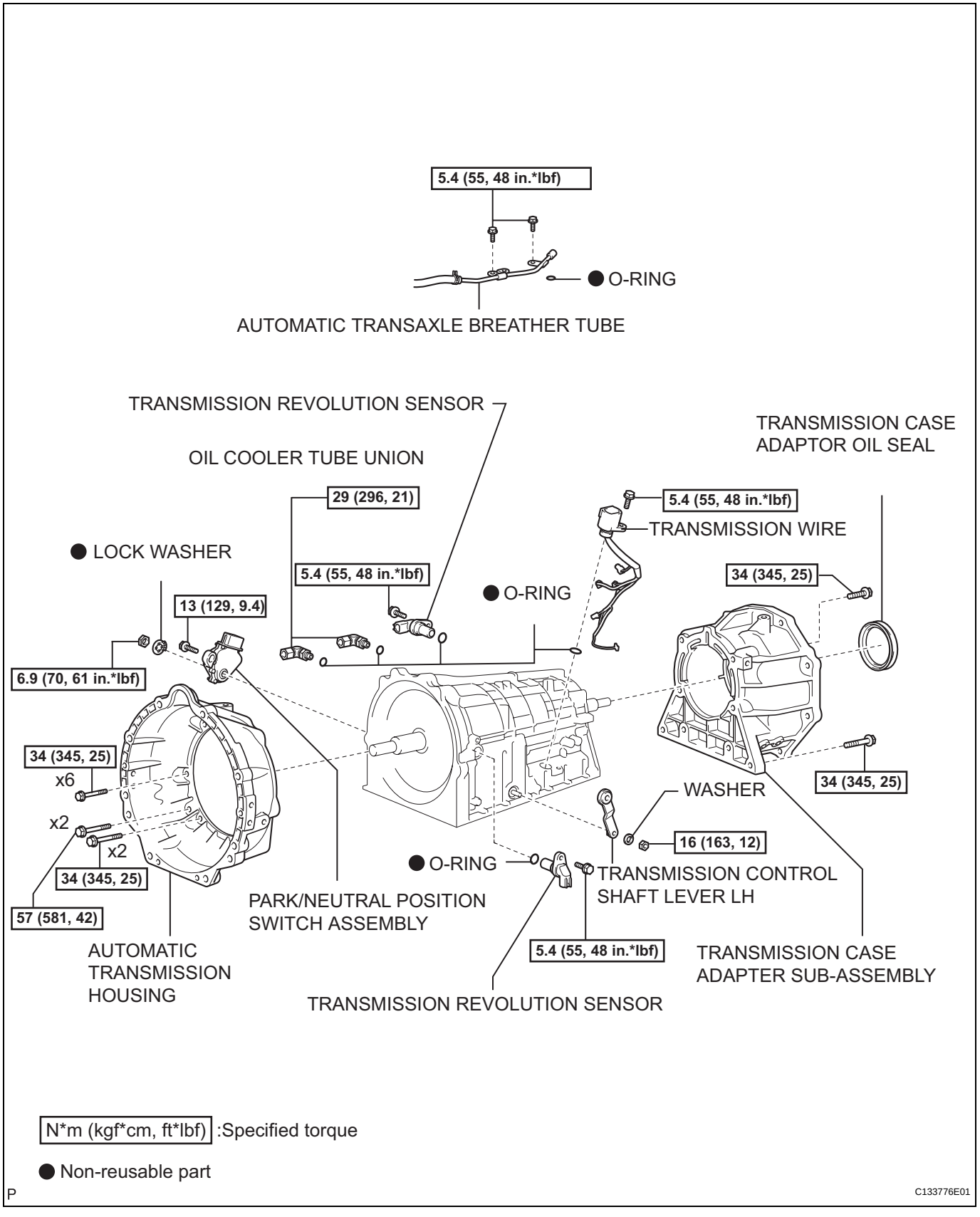

AT

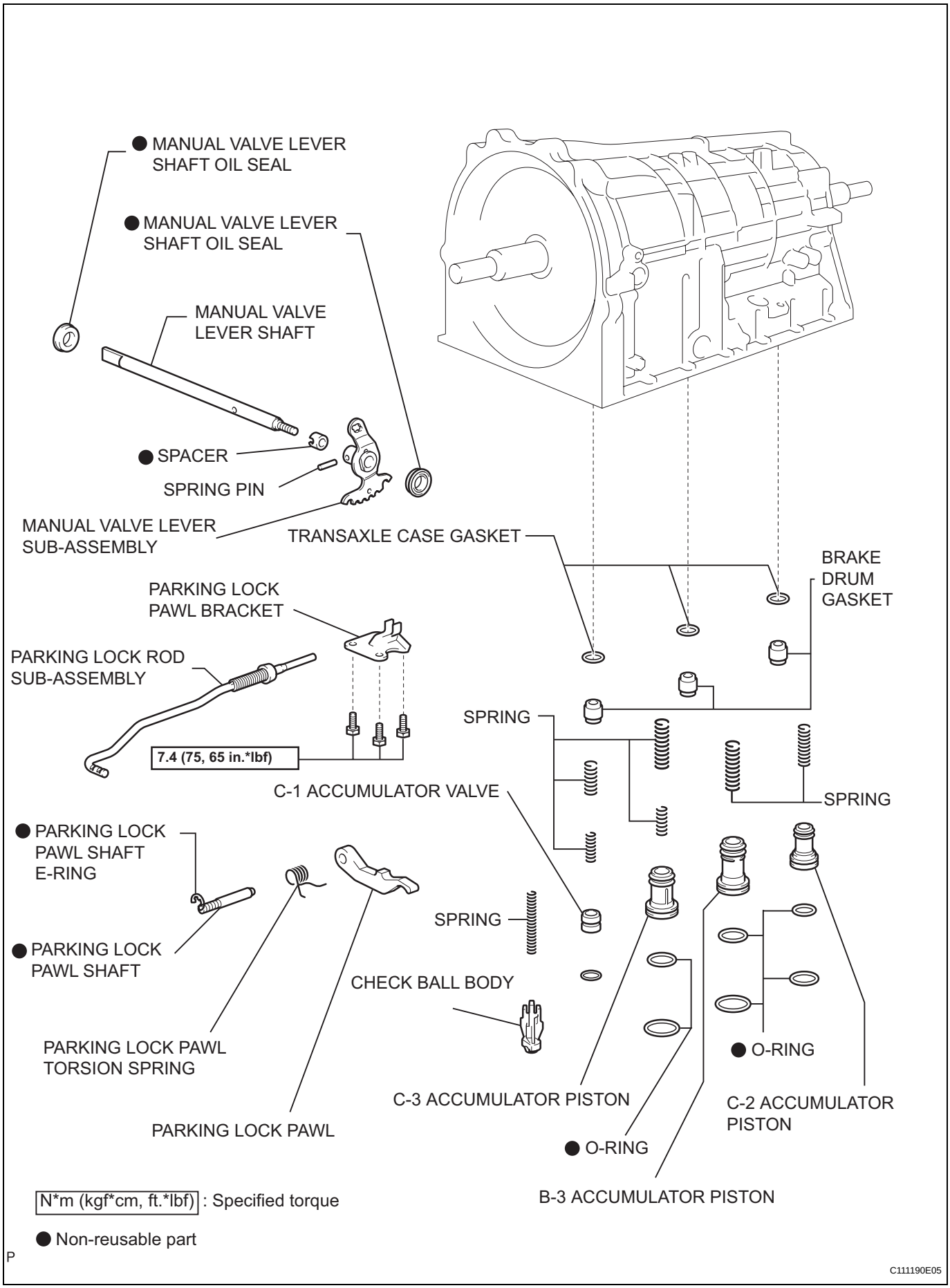
● MANUAL VALVE LEVER SHAFT OIL SEAL
● MANUAL VALVE LEVER SHAFT OIL SEAL
MANUAL VALVE LEVER SHAFT
● SPACER
SPRING PIN
MANUAL VALVE LEVER SUB-ASSEMBLY
TRANSAXLE CASE GASKET
BRAKE DRUM GASKET
PARKING LOCK PAWL BRACKET
PARKING LOCK ROD SUB-ASSEMBLY
7.4 (75, 65 in.*lbf)
SPRING
C-1 ACCUMULATOR VALVE
SPRING
● PARKING LOCK PAWL SHAFT E-RING
● PARKING LOCK PAWL SHAFT
SPRING
CHECK BALL BODY
● O-RING
PARKING LOCK PAWL TORSION SPRING
C-3 ACCUMULATOR PISTON
C-2 ACCUMULATOR PISTON
PARKING LOCK PAWL
● O-RING
B-3 ACCUMULATOR PISTON
N*m (kgf*cm, ft.*lbf) : Specified torque
● Non-reusable part
P
C111190E05

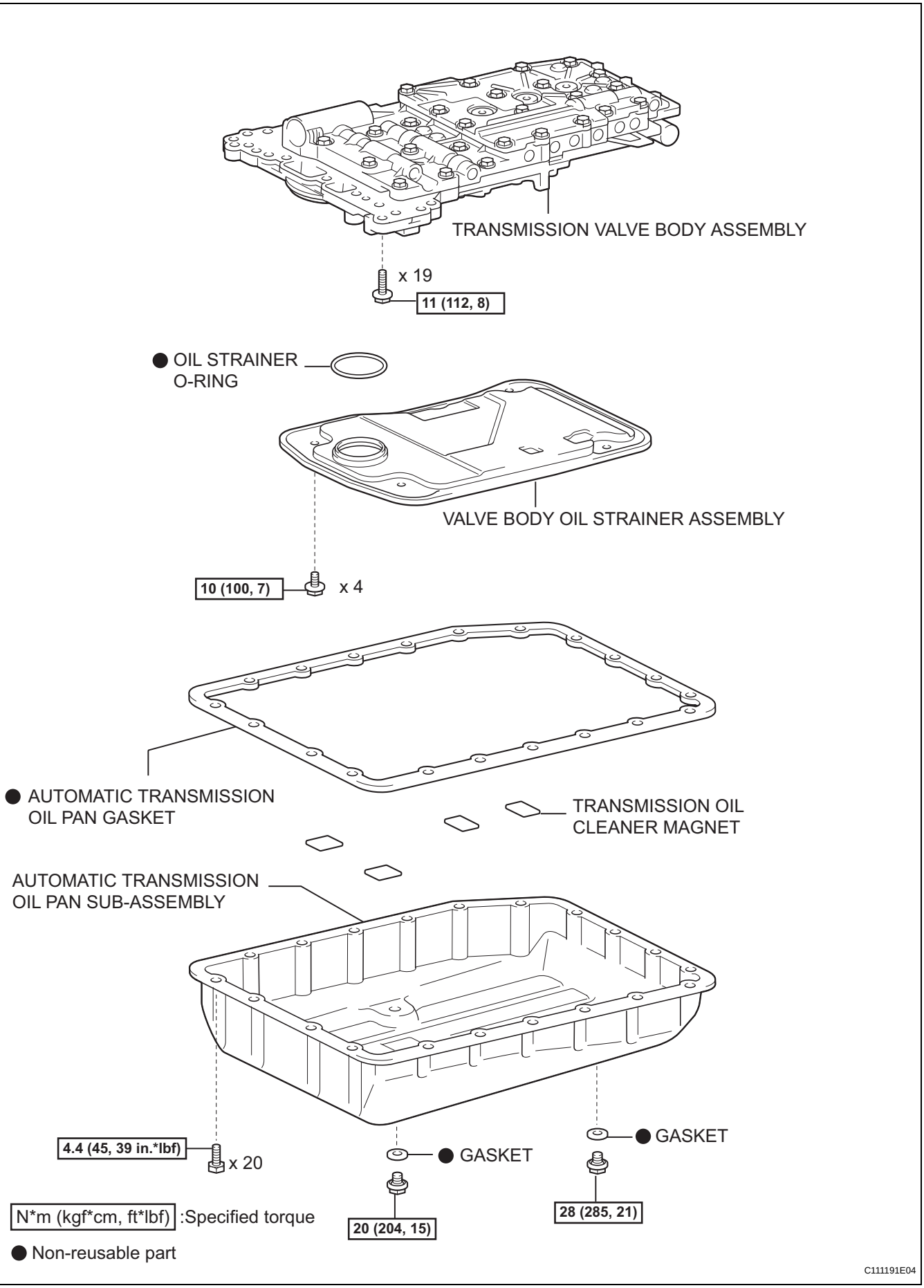
TRANSMISSION VALVE BODY ASSEMBLY
x 19
11 (112, 8)
● OIL STRAINER
O-RING
VALVE BODY OIL STRAINER ASSEMBLY
10 (100, 7)
x 4
● AUTOMATIC TRANSMISSION
OIL PAN GASKET
TRANSMISSION OIL
CLEANER MAGNET
AUTOMATIC TRANSMISSION
OIL PAN SUB-ASSEMBLY
4.4 (45, 39 in.*lbf)
x 20
● GASKET
● GASKET
20 (204, 15)
28 (285, 21)
N*m (kgf*cm, ft*lbf) :Specified torque
● Non-reusable part
P
C111191E04

AT

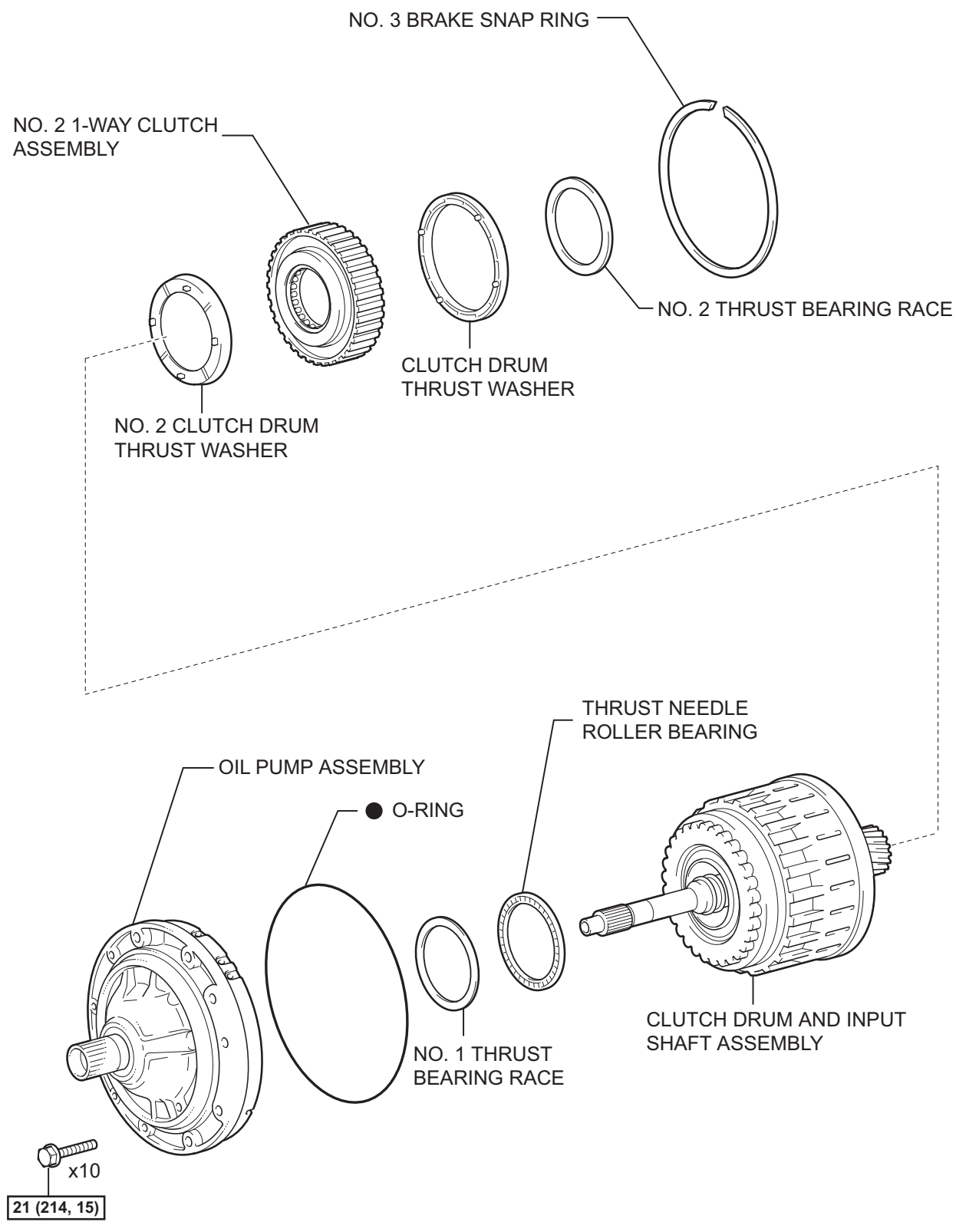

AT

N*m (kgf*cm, ft*lbf) :Specified torque

● Non-reusable part

P

C111194E04

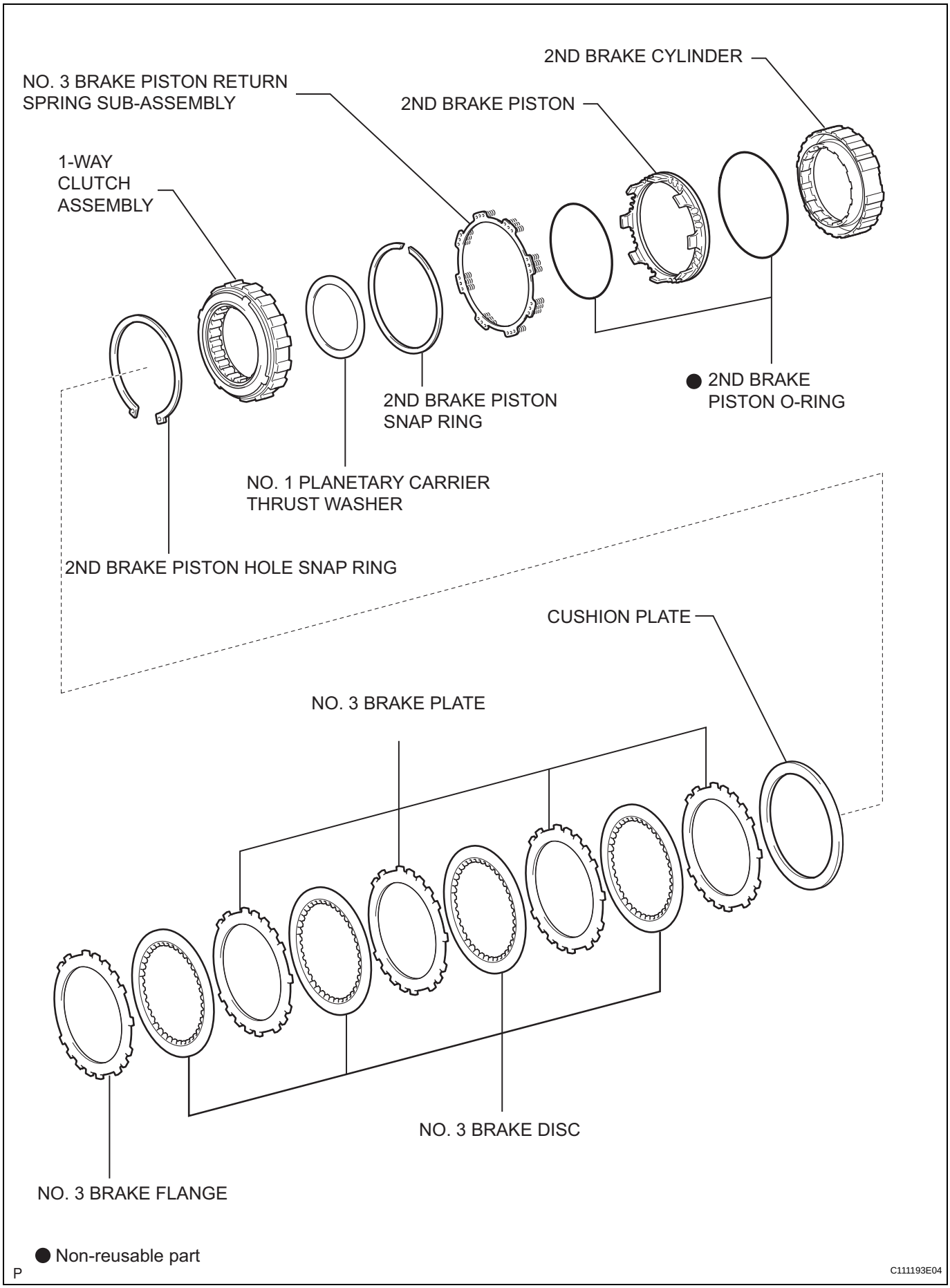
2ND BRAKE CYLINDER
NO. 3 BRAKE PISTON RETURN SPRING SUB-ASSEMBLY
2ND BRAKE PISTON
1-WAY CLUTCH ASSEMBLY
● 2ND BRAKE PISTON O-RING
2ND BRAKE PISTON SNAP RING
NO. 1 PLANETARY CARRIER THRUST WASHER
2ND BRAKE PISTON HOLE SNAP RING
CUSHION PLATE
NO. 3 BRAKE PLATE
NO. 3 BRAKE DISC
NO. 3 BRAKE FLANGE
● Non-reusable part
P
C111193E04

AT

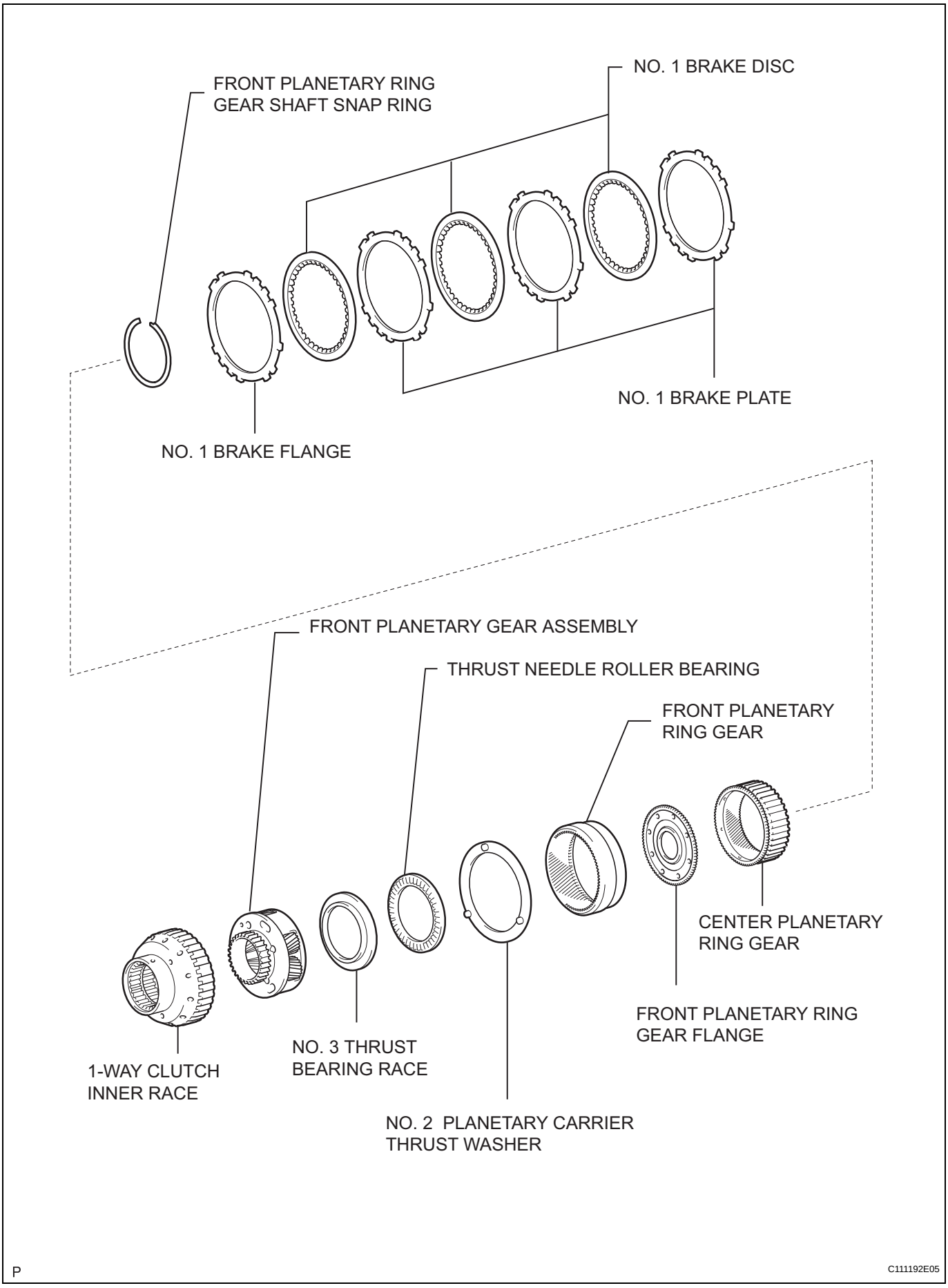

AT

P

C111192E05

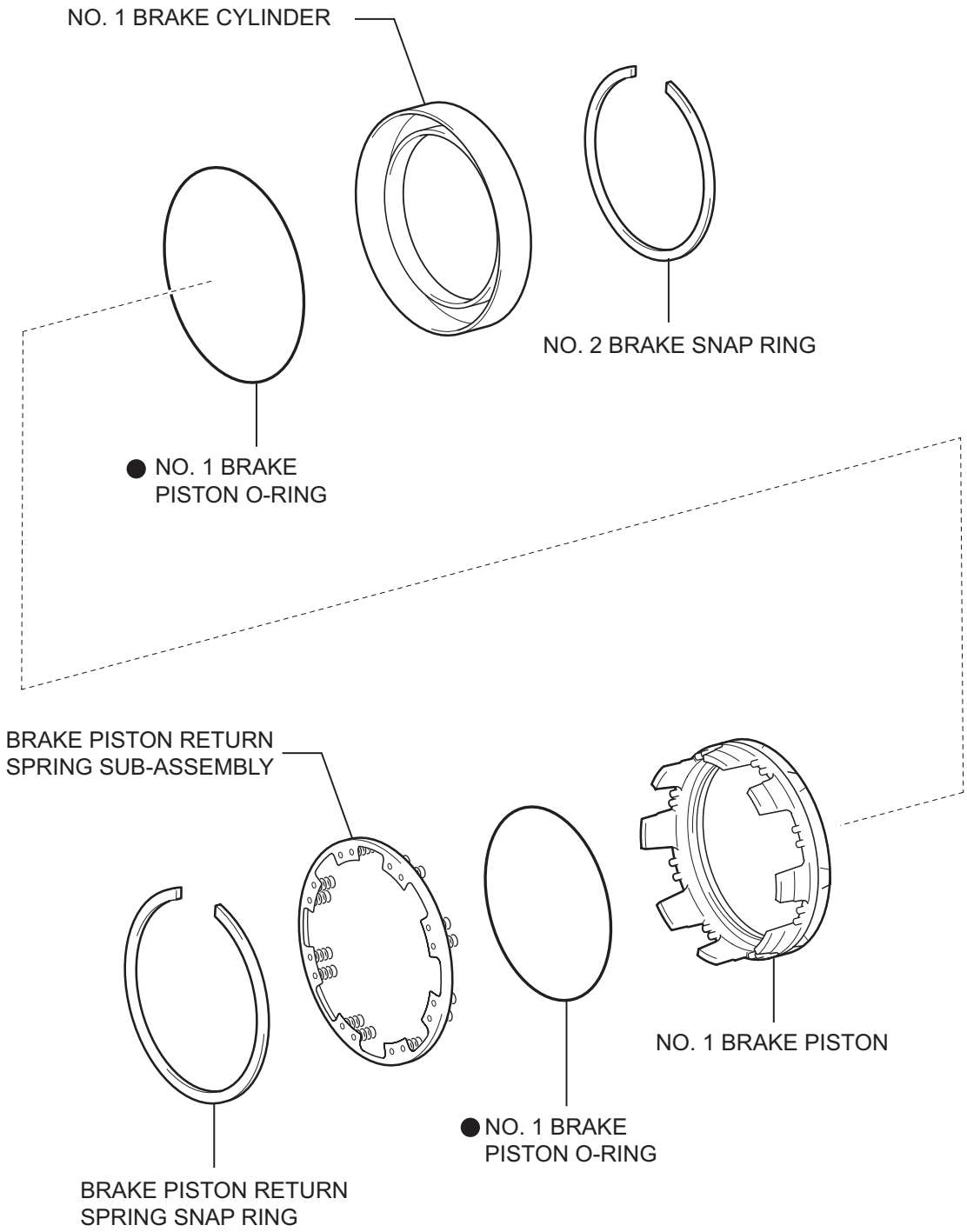

● Non-reusable part

P

C111197E04

AT

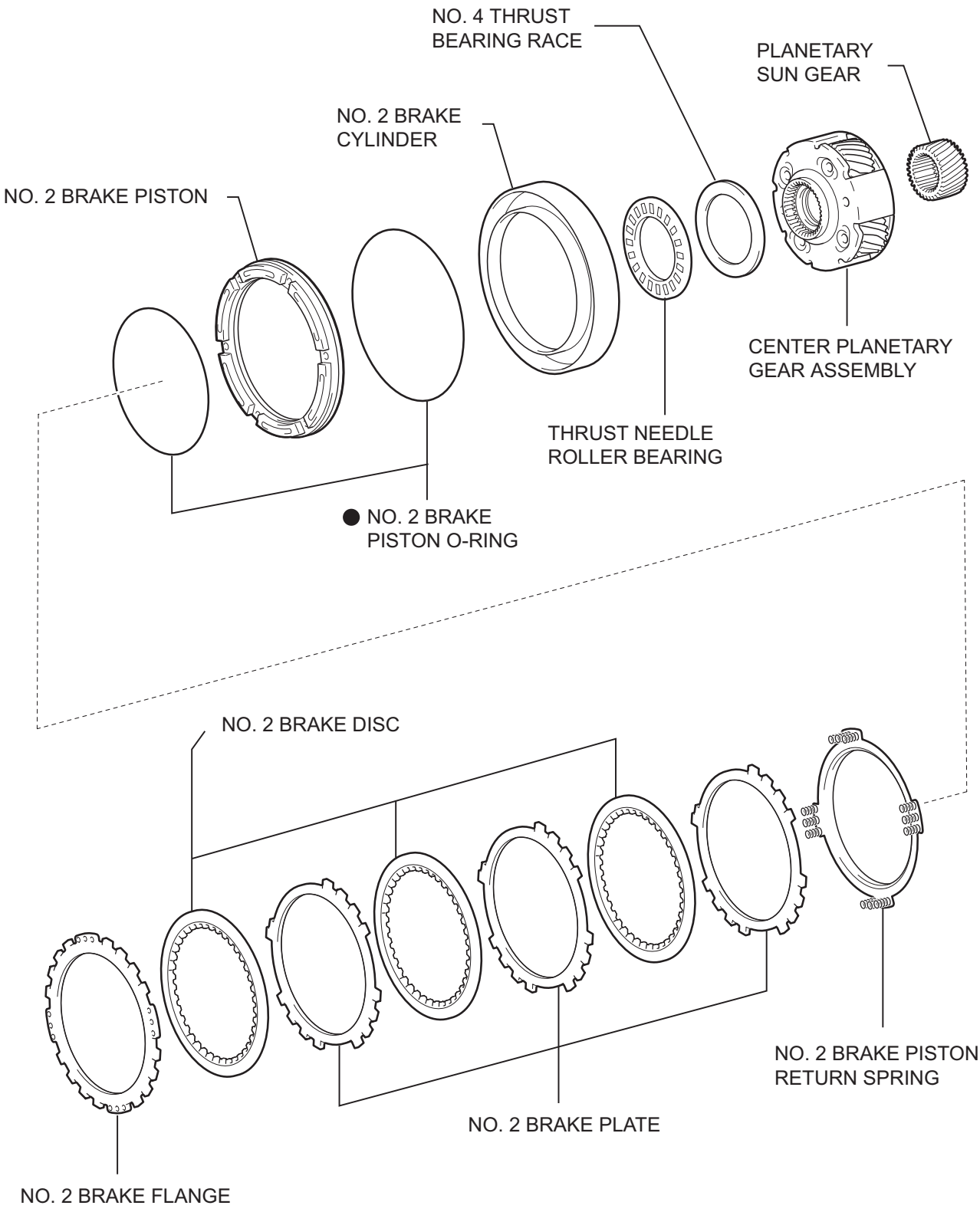
NO. 4 THRUST BEARING RACE
PLANETARY SUN GEAR
NO. 2 BRAKE CYLINDER
NO. 2 BRAKE PISTON
CENTER PLANETARY GEAR ASSEMBLY
THRUST NEEDLE ROLLER BEARING
● NO. 2 BRAKE PISTON O-RING
NO. 2 BRAKE DISC
NO. 2 BRAKE PISTON RETURN SPRING
NO. 2 BRAKE PLATE
NO. 2 BRAKE FLANGE
● Non-reusable part
P
C111196E04

AT

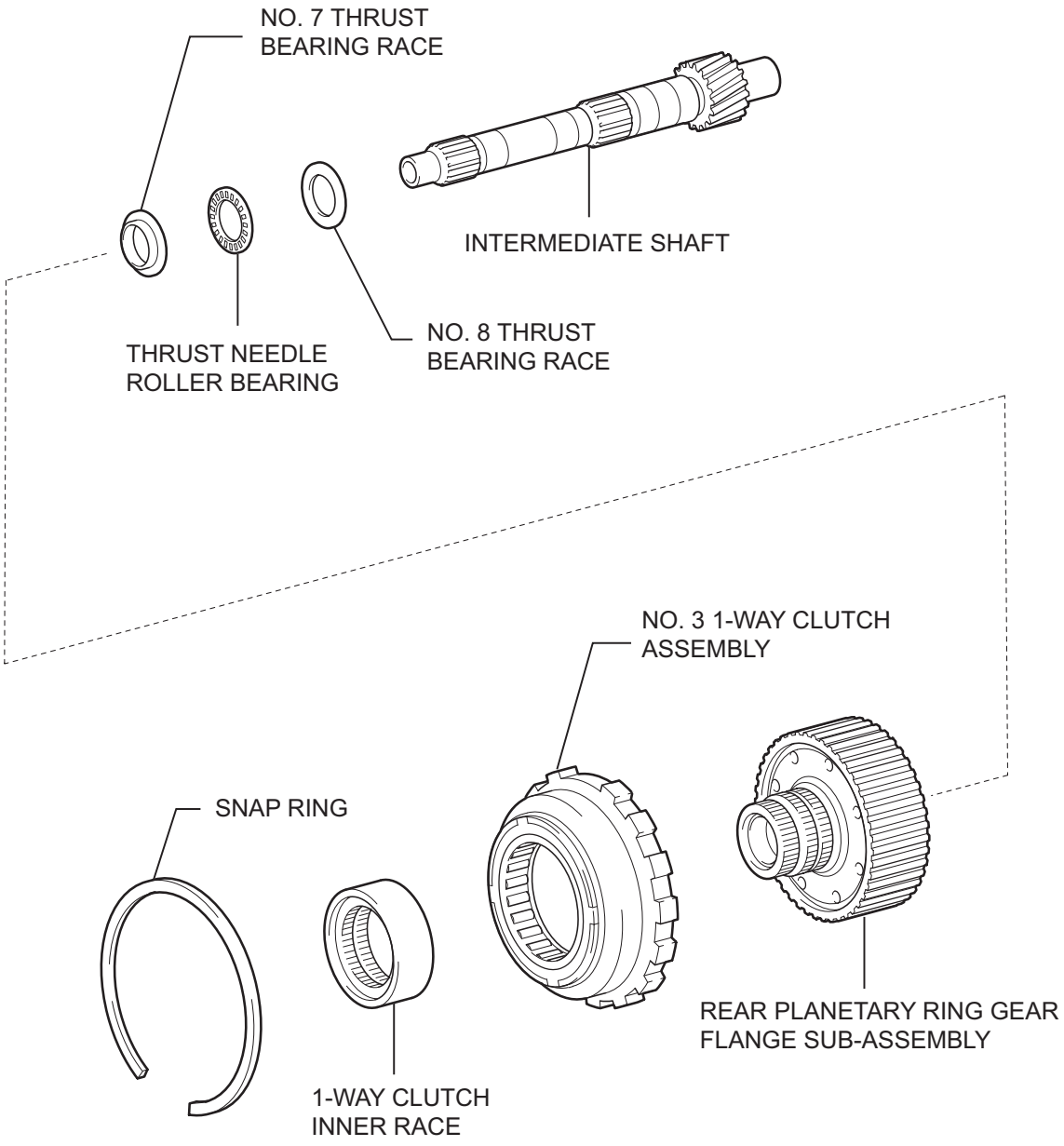

AT

P

C111195E05

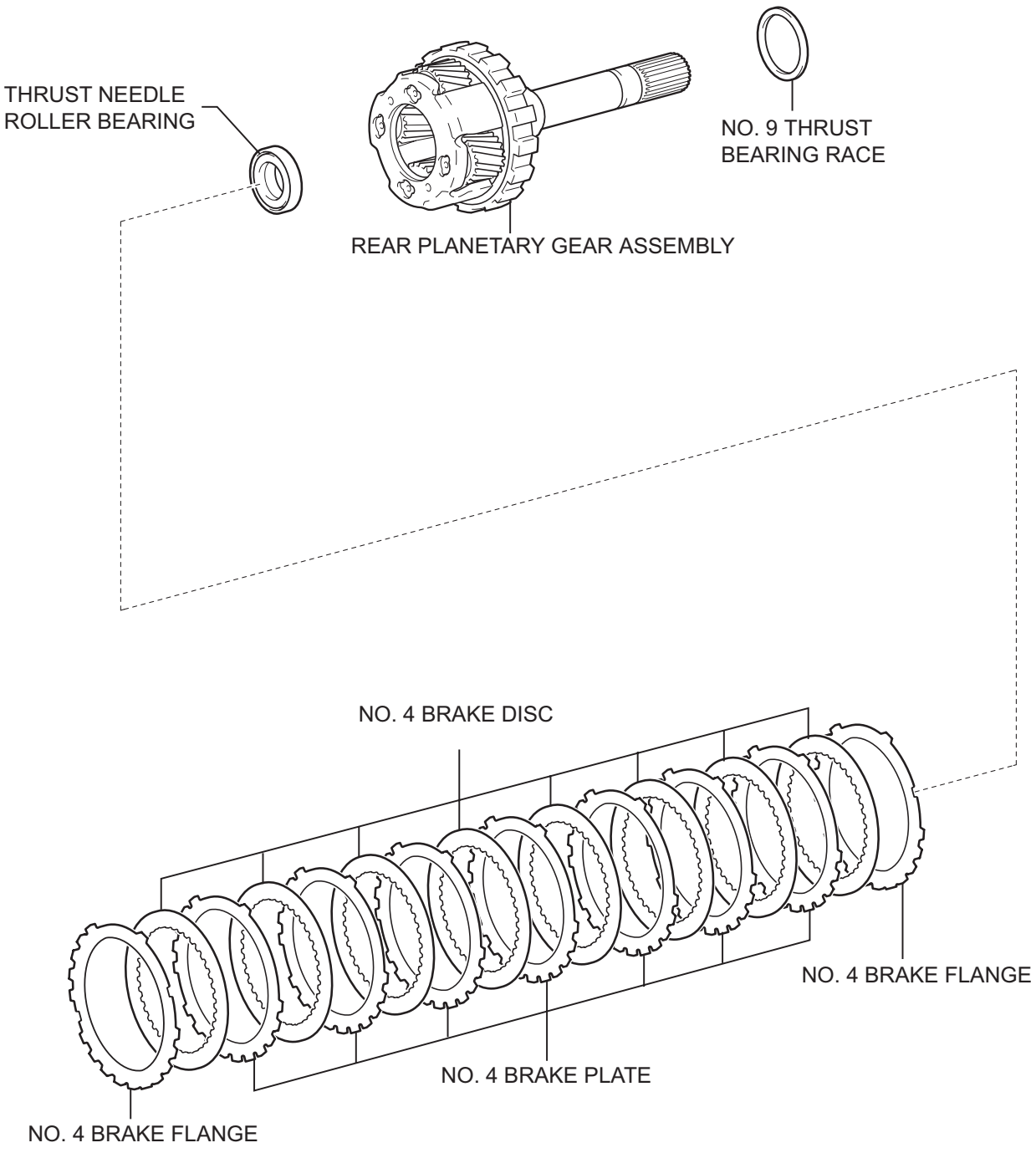

AT

P

C129562E01

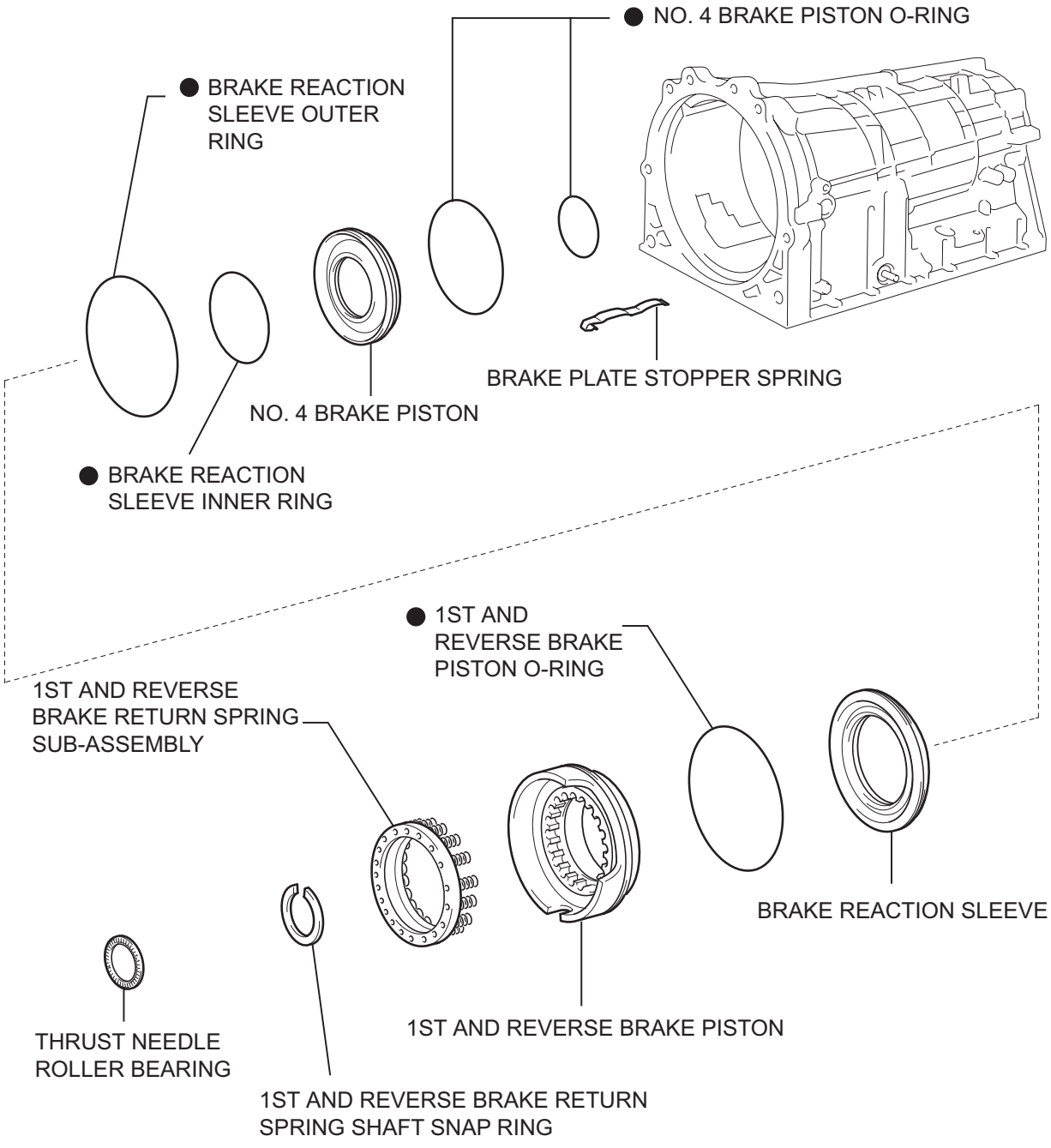
● NO. 4 BRAKE PISTON O-RING
● BRAKE REACTION SLEEVE OUTER RING
BRAKE PLATE STOPPER SPRING
NO. 4 BRAKE PISTON
● BRAKE REACTION SLEEVE INNER RING
● 1ST AND REVERSE BRAKE PISTON O-RING
1ST AND REVERSE BRAKE RETURN SPRING SUB-ASSEMBLY
BRAKE REACTION SLEEVE
THRUST NEEDLE ROLLER BEARING
1ST AND REVERSE BRAKE PISTON
1ST AND REVERSE BRAKE RETURN SPRING SHAFT SNAP RING
● Non-reusable part
P
C111198E04

AT

DISASSEMBLY

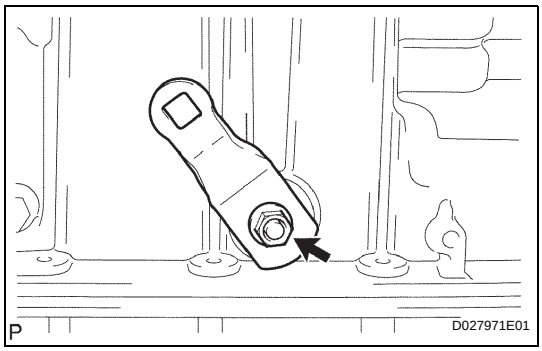

1. REMOVE TRANSMISSION CONTROL SHAFT LEVER LH

(a) Remove the nut, washer and control shaft lever LH.

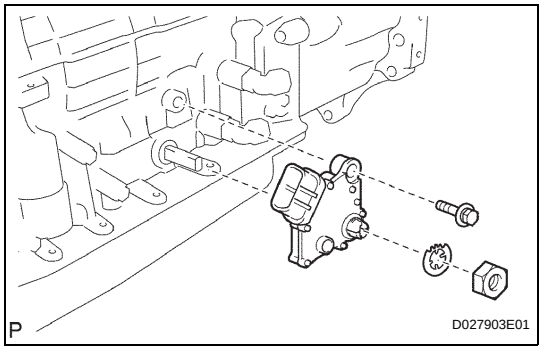

2. REMOVE PARK/NEUTRAL POSITION SWITCH ASSEMBLY

(a) Using a screwdriver, pry out the lock washer.
(b) Remove the nut, lock washer and bolt.
(c) Remove the park/neutral position switch.

3. REMOVE OIL COOLER TUBE UNION

(a) Remove the 2 oil cooler tube unions.
(b) Remove the O-ring from the oil cooler tube union.

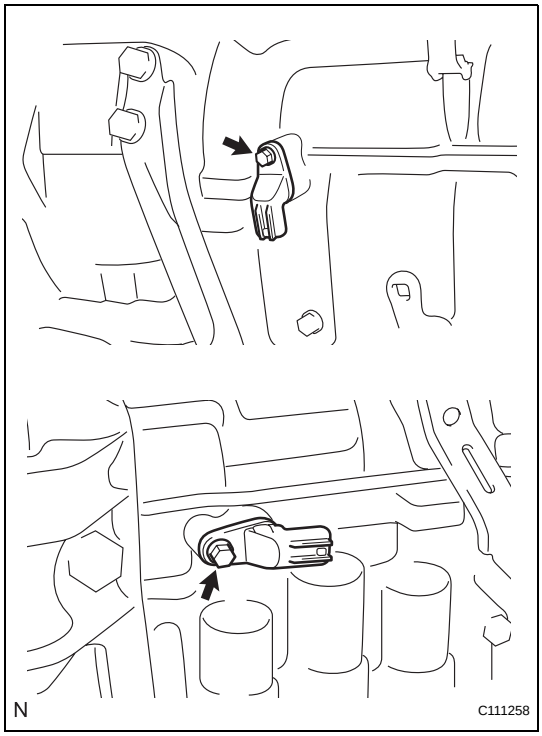

4. REMOVE TRANSMISSION REVOLUTION SENSOR

(a) Remove the 2 bolts and 2 transmission revolution sensors.
(b) Remove the O-ring from each sensor.

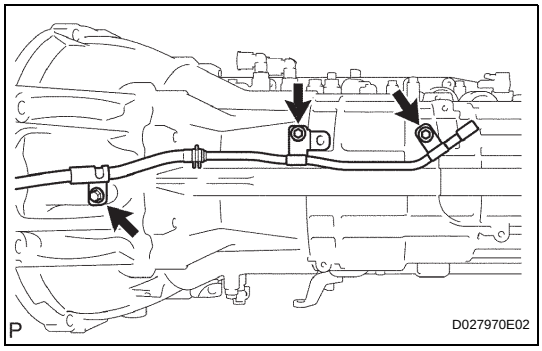

5. REMOVE AUTOMATIC TRANSAXLE BREATHER TUBE

(a) Remove the 3 bolts.
(b) Remove the breather tube.
(c) Remove the O-ring from breather tube.

AT

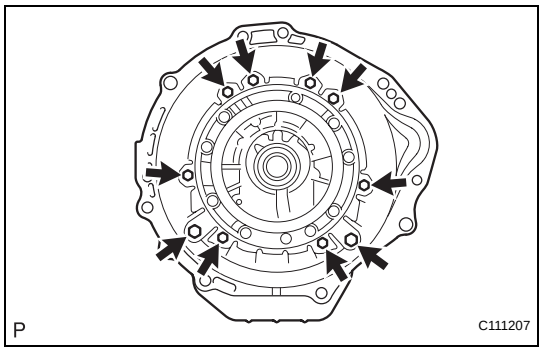

6. REMOVE AUTOMATIC TRANSMISSION HOUSING

(a) Remove the 10 bolts.

(b) Remove the transmission housing.

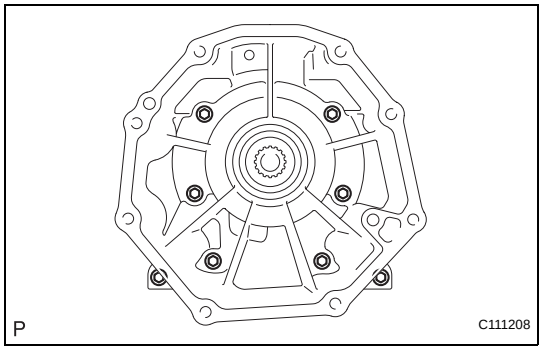

7. REMOVE TRANSMISSION CASE ADAPTER SUB-ASSEMBLY

(a) Remove the 8 bolts and transmission case adapter.

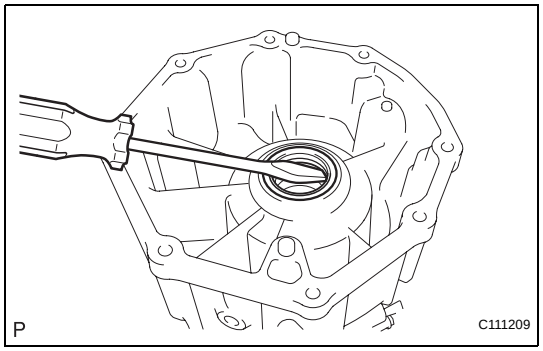

8. REMOVE TRANSMISSION CASE ADAPTOR OIL SEAL

(a) Using a screwdriver, pry out the oil seal.

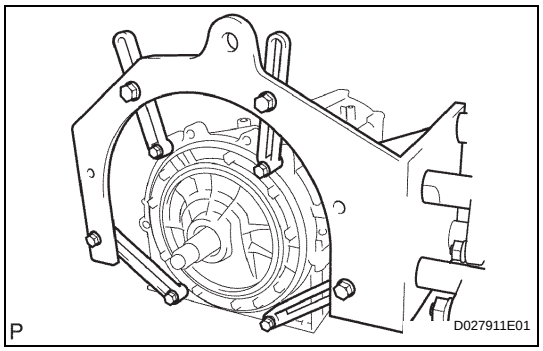

9. FIX AUTOMATIC TRANSMISSION CASE SUB-ASSEMBLY

(a) Install the transmission case onto the overhaul attachment.

10. REMOVE AUTOMATIC TRANSMISSION OIL PAN SUB-ASSEMBLY

NOTICE:

Do not turn the transmission over as this will contaminate the valve body with foreign matter on the bottom of the pan.

(a) Remove the drain plug and the 20 bolts.

11. INSPECT AUTOMATIC TRANSMISSION OIL PAN SUB-ASSEMBLY (See page AT-217)

AT

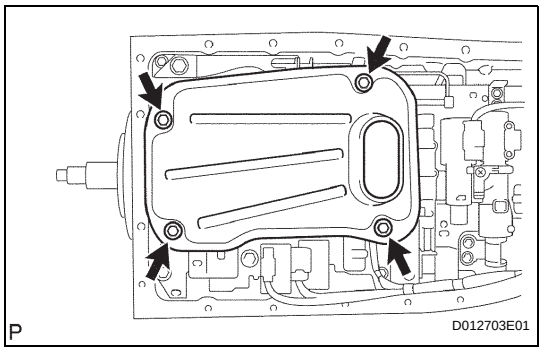

12. REMOVE VALVE BODY OIL STRAINER ASSEMBLY

(a) Turn over the transmission.
(b) Remove the 4 bolts holding the valve body oil strainer assembly from the valve body.
(c) Remove the O-ring form the valve body oil strainer assembly.

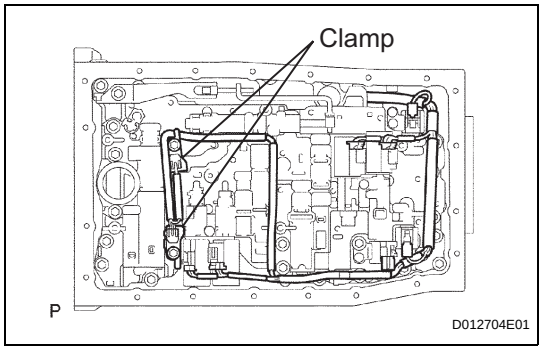

13. REMOVE TRANSMISSION WIRE

(a) Remove the ATF temperature sensor.
(b) Remove the 2 bolts and 2 clamps.
(c) Disconnect the 7 connectors from the shift solenoid valves.

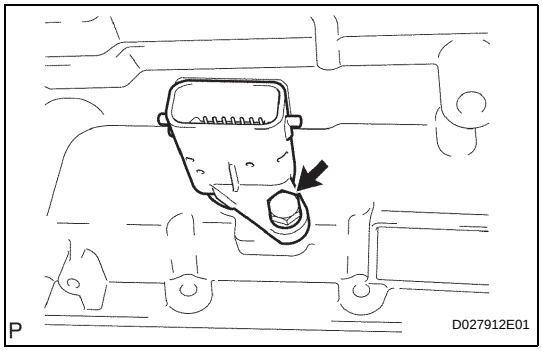

(d) Remove the bolt from the case.
(e) Pull the transmission wire out of the transmission case.
(f) Remove the O-ring from the transmission wire.

AT

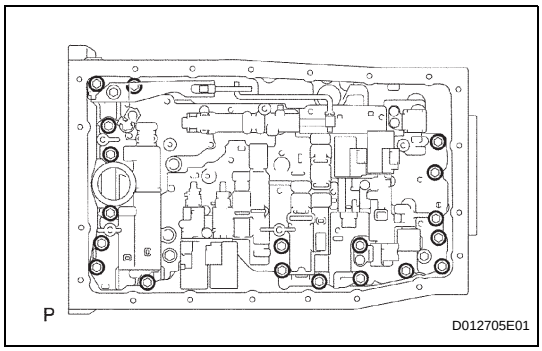

14. REMOVE TRANSMISSION VALVE BODY ASSEMBLY

(a) Remove the 19 bolts.
(b) Remove the valve body assembly.

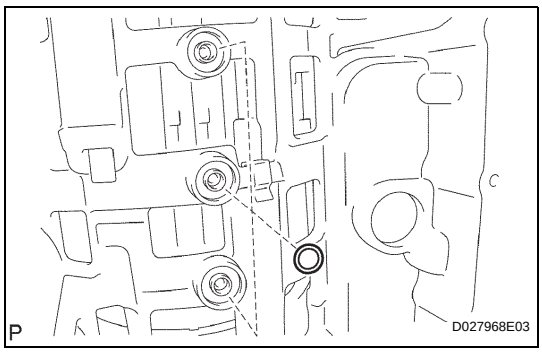

15. REMOVE TRANSAXLE CASE GASKET

(a) Remove the 3 transaxle case gaskets.

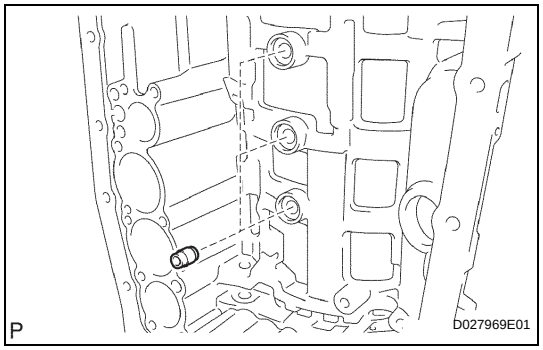

16. REMOVE BRAKE DRUM GASKET

(a) Remove the 3 brake drum gaskets.

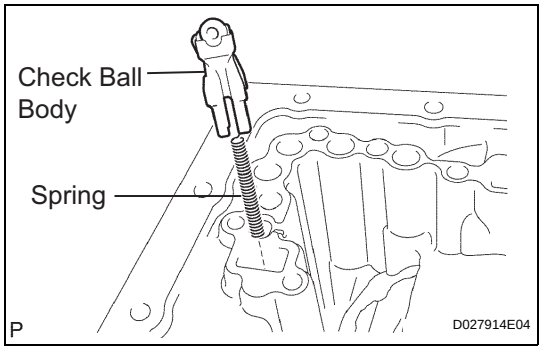

17. REMOVE CHECK BALL BODY

(a) Remove the check ball body and the spring.

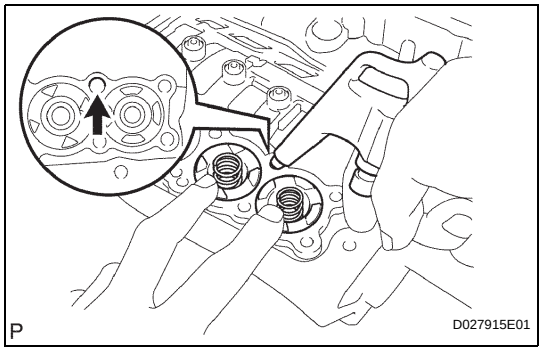

18. REMOVE C-2 ACCUMULATOR PISTON

(a) Applying compressed air to the oil hole, remove the C-2 accumulator piston and spring.

(b) Remove the 2 O-rings from the piston.

NOTICE:

Be careful as the C-3 and B-3 accumulator pistons may jump out.

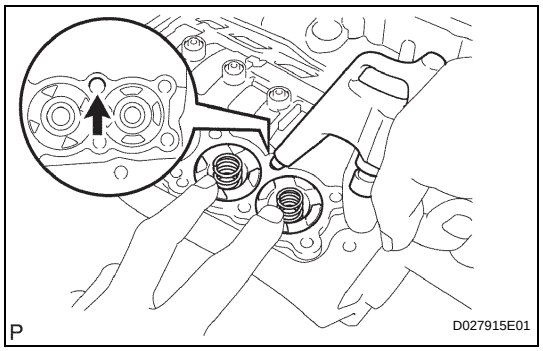

19. REMOVE B-3 ACCUMULATOR PISTON

(a) Applying compressed air to the oil hole, remove the B-3 accumulator piston and spring.

(b) Remove the 2 O-rings from the piston.

NOTICE:

Be careful as the C-3 accumulator piston may jump out.

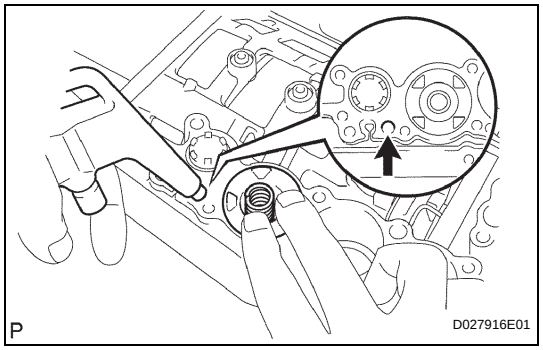

20. REMOVE C-3 ACCUMULATOR PISTON

(a) Applying compressed air to the oil hole, remove the C-3 accumulator piston and 2 springs.

(b) Remove the 2 O-rings from the piston.

AT

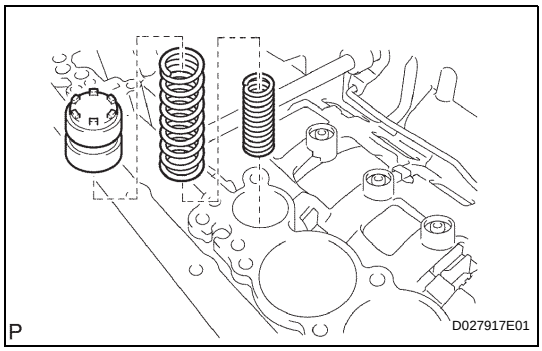

21. REMOVE C-1 ACCUMULATOR VALVE

(a) Remove the C-1 accumulator valve and 2 springs.

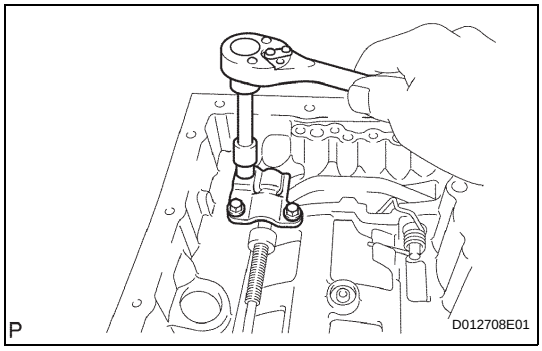

22. REMOVE PARKING LOCK PAWL BRACKET

(a) Remove the 3 bolts and parking lock pawl bracket.

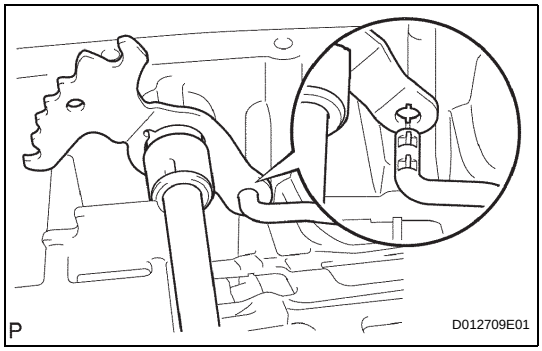

23. REMOVE PARKING LOCK ROD SUB-ASSEMBLY

(a) Disconnect the parking lock rod from the manual valve lever.

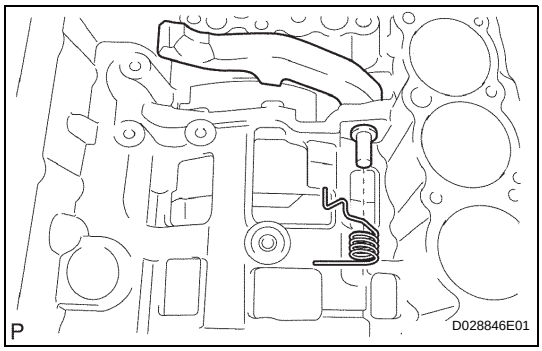

24. REMOVE PARKING LOCK PAWL SHAFT

(a) Pull out the parking lock pawl shaft from the front side, and then remove the lock pawl and spring.

(b) Remove the E-ring from the shaft.

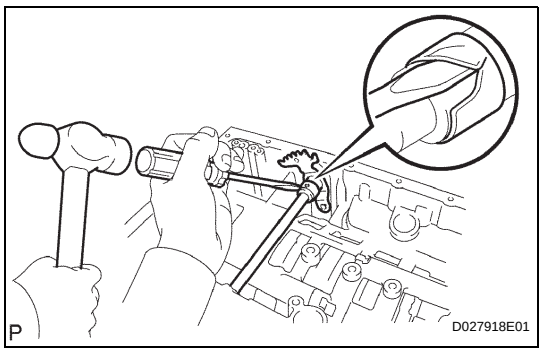

25. REMOVE MANUAL VALVE LEVER SUB-ASSEMBLY

(a) Using a hammer and screwdriver, cut off the spacer and remove it from the shaft.

AT

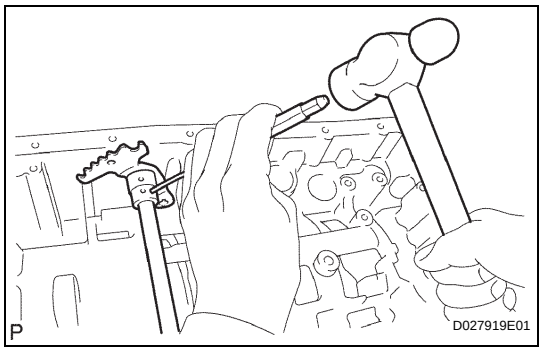

(b) Using a pin punch and hammer, tap out the spring pin.
HINT:
Slowly drive out the spring pin so that it does not fall into the transmission case.
(c) Pull the manual valve lever shaft out through the case, and remove the manual valve lever.

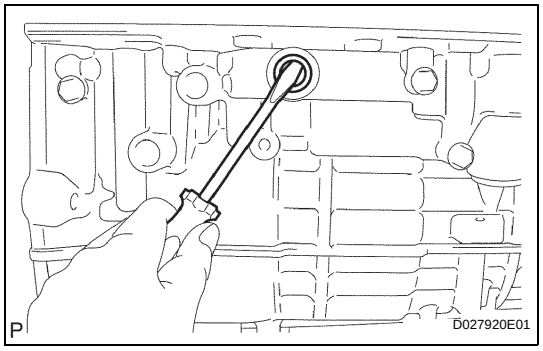

26. REMOVE MANUAL VALVE LEVER SHAFT OIL SEAL

(a) Using a screwdriver, remove the 2 oil seals.

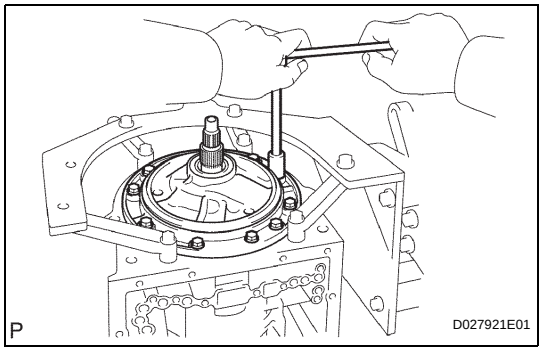

27. REMOVE OIL PUMP ASSEMBLY

(a) Remove the 10 bolts holding the oil pump from the transmission case.

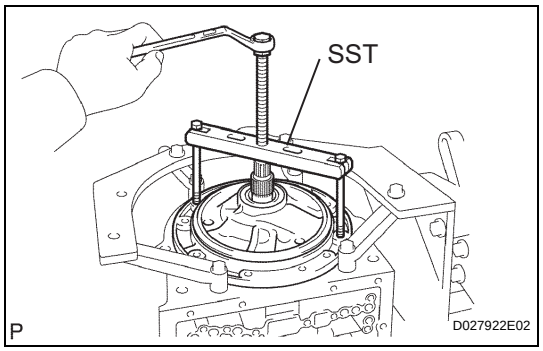

(b) Using SST, remove the oil pump.
SST 09350-30020 (09350-07020)

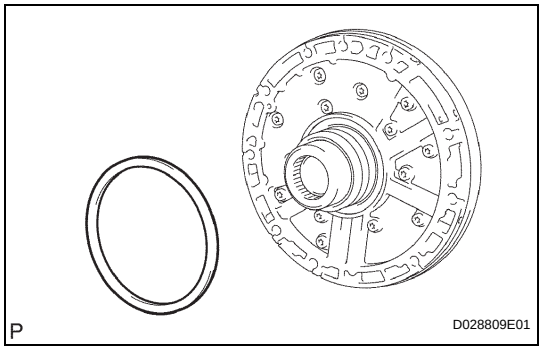

(c) Remove the No. 1 thrust bearing race from the front oil pump.

AT

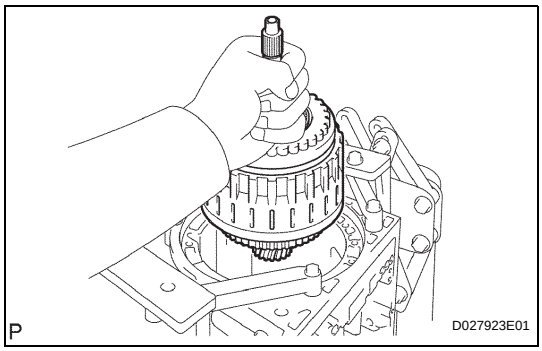

28. REMOVE CLUTCH DRUM AND INPUT SHAFT ASSEMBLY

(a) Remove the clutch drum and input shaft drum assembly from the transmission case.

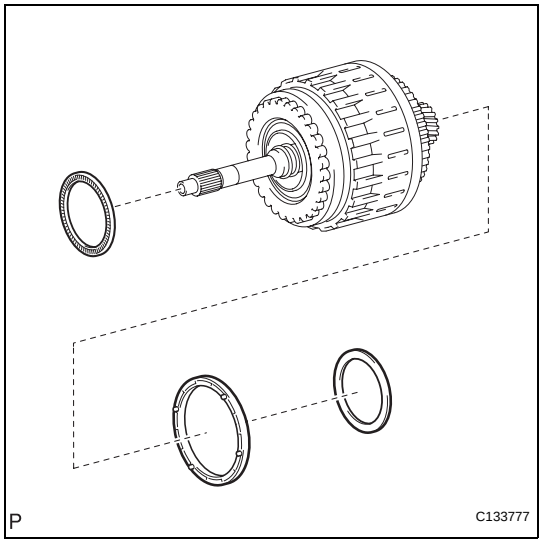

(b) Remove the clutch drum thrust washer, No. 2 thrust bearing race and thrust needle roller bearing.

29. INSPECT NO. 2 1-WAY CLUTCH ASSEMBLY (See page AT-218)

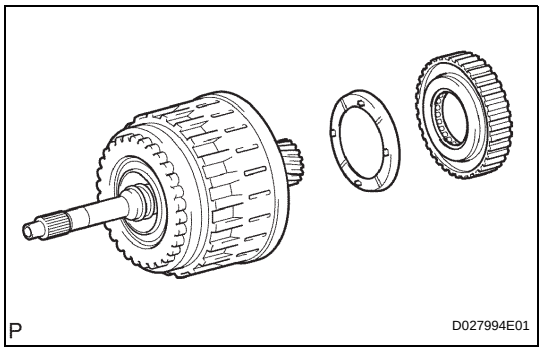

30. REMOVE NO. 2 1-WAY CLUTCH ASSEMBLY

(a) Remove the No. 2 1-way clutch assembly and No. 2 clutch drum thrust washer from the clutch drum and input shaft assembly.

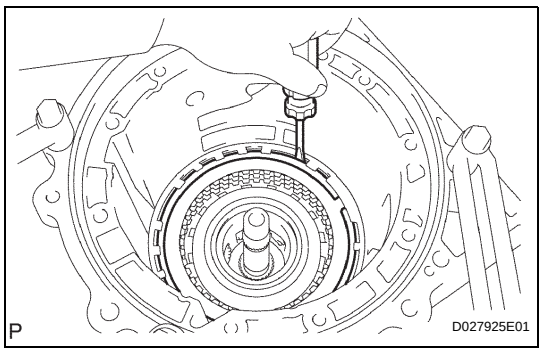

31. REMOVE NO. 3 BRAKE SNAP RING

(a) Using a screwdriver, remove the No. 3 brake snap ring from the case.

AT

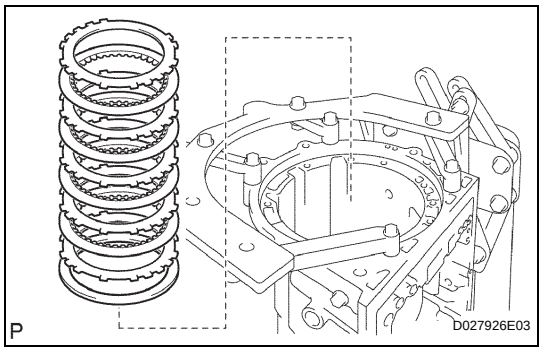

32. REMOVE NO. 3 BRAKE DISC

(a) Remove the flange, cushion plate, 4 discs and 4 plates from the case.

33. INSPECT NO. 3 BRAKE DISC (See page AT-218)

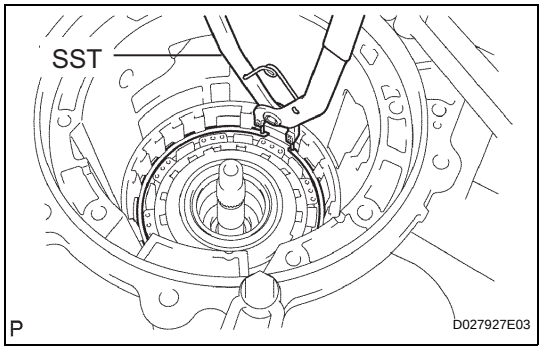

34. REMOVE 2ND BRAKE PISTON HOLE SNAP RING

(a) Using SST, remove the snap ring.
SST 09350-30020 (09350-07060)

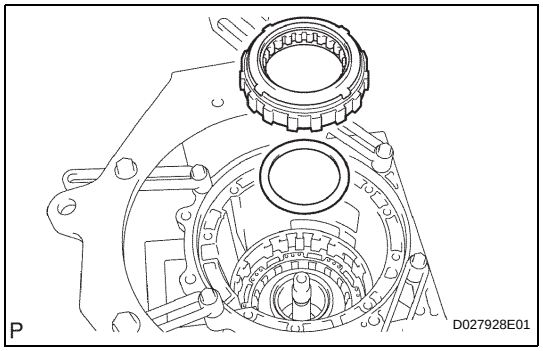

35. REMOVE 1-WAY CLUTCH ASSEMBLY

(a) Remove the 1-way clutch assembly and No. 1 planetary carrier thrust washer from the case.

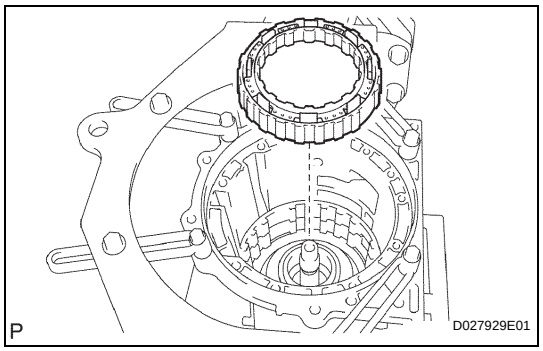

36. REMOVE 2ND BRAKE CYLINDER

(a) Remove the 2nd brake cylinder from the case.

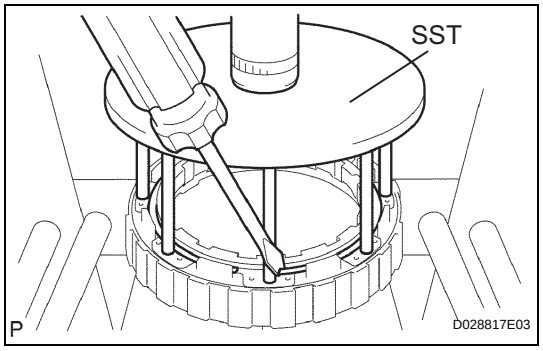

37. REMOVE 2ND BRAKE PISTON

(a) Using SST and a press, remove the snap ring.
SST 09351-40010

(b) Remove the 2nd brake piston return spring from the 2nd brake piston.

AT

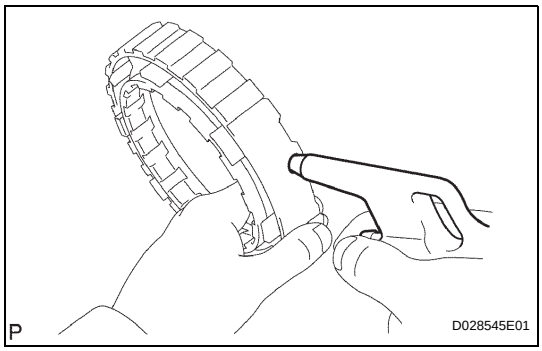

(c) Hold the 2nd brake piston and apply compressed air (392 kPa, 4.0 kgf/cm^2, 57 psi) to the brake cylinder to remove the 2nd brake piston.

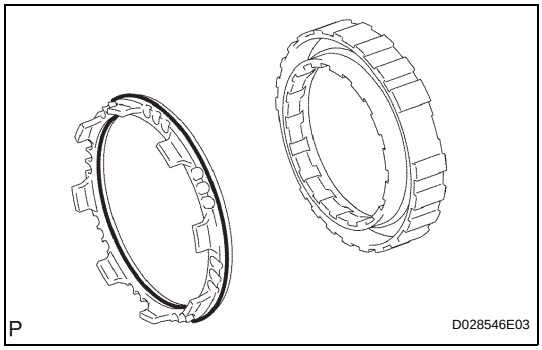

(d) Remove the 2 O-rings from the 2nd brake piston.

38. INSPECT NO. 3 BRAKE PISTON RETURN SPRING SUB-ASSEMBLY (See page AT-218)

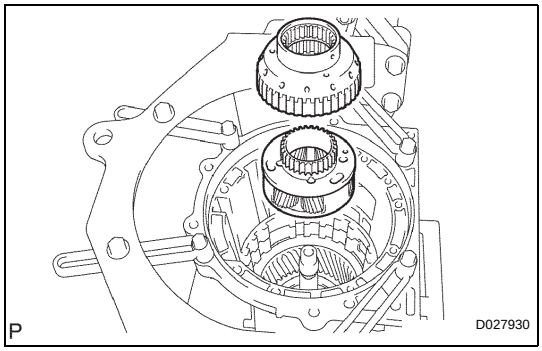

39. REMOVE FRONT PLANETARY GEAR ASSEMBLY

(a) Remove the front planetary gear and 1-way clutch inner race from the case.

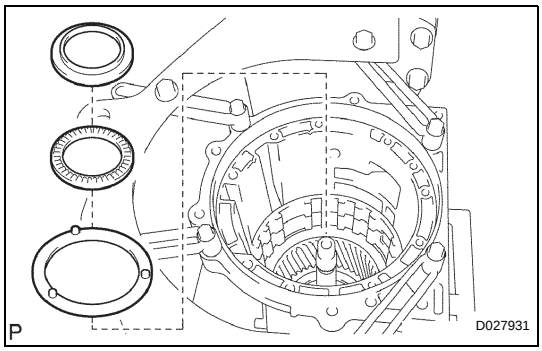

(b) Remove the thrust needle roller bearing, No. 3 thrust bearing race and No. 2 planetary carrier thrust washer from the front planetary gear.

40. INSPECT FRONT PLANETARY GEAR ASSEMBLY (See page AT-218)

41. INSPECT 1-WAY CLUTCH ASSEMBLY (See page AT-219)

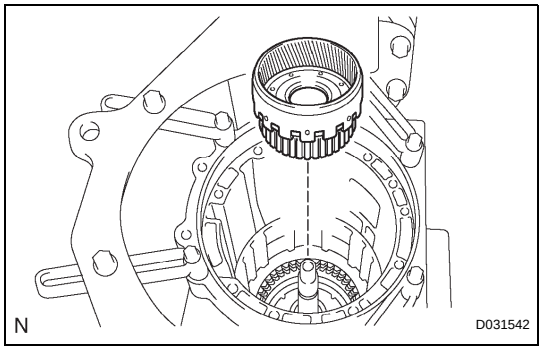

42. REMOVE FRONT PLANETARY RING GEAR

(a) Remove the front planetary ring gear from the transmission case.

AT

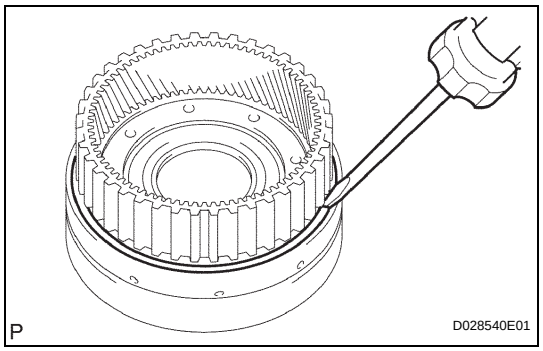

43. REMOVE CENTER PLANETARY RING GEAR

(a) Using a screwdriver, remove the snap ring.

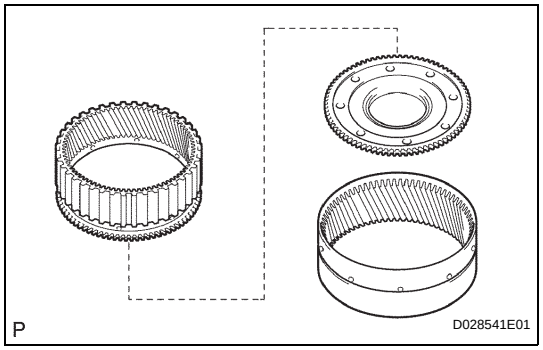

(b) Remove the center planetary ring gear and front planetary ring gear flange from the front planetary ring gear.

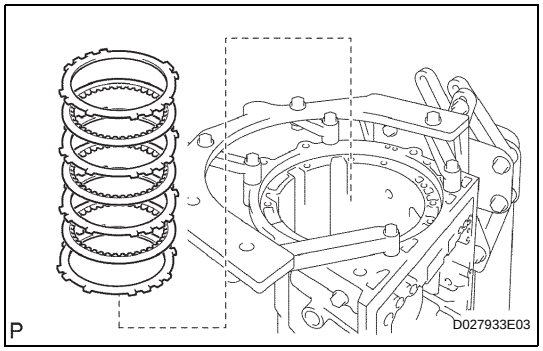

44. REMOVE NO. 1 BRAKE DISC

(a) Remove the flange, 3 discs and 3 plates from the case.

45. INSPECT NO. 1 BRAKE DISC (See page AT-219)

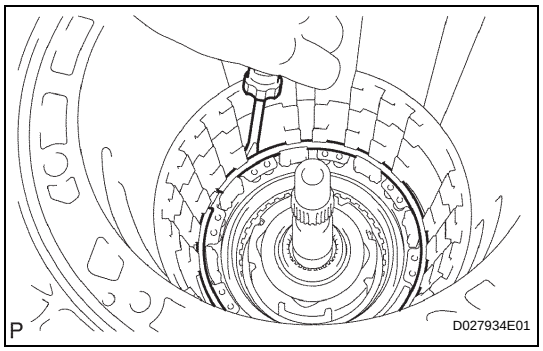

46. REMOVE BRAKE PISTON RETURN SPRING SNAP RING

(a) Using a screwdriver, remove the brake piston return spring snap ring from the case.

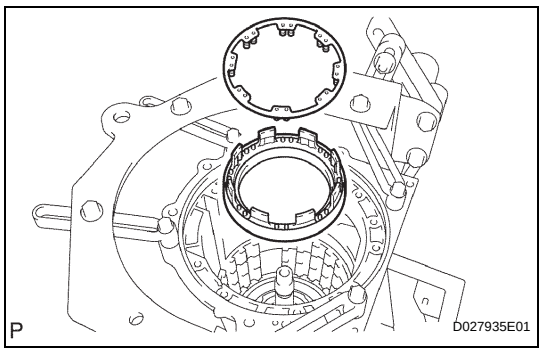

47. REMOVE BRAKE PISTON RETURN SPRING SUB-ASSEMBLY

(a) Remove the brake piston return spring and No. 1 brake piston with the No. 1 brake cylinder from the transmission case.

48. INSPECT BRAKE PISTON RETURN SPRING SUB-ASSEMBLY (See page AT-219)

AT

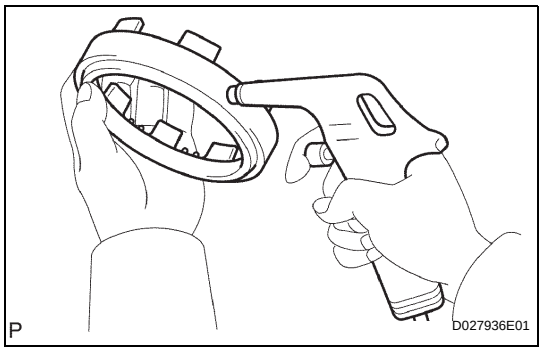

49. REMOVE NO. 1 BRAKE PISTON

(a) Hold the No. 1 brake piston and apply compressed air (392 kPa, 4 kgf/cm^2, 57 psi) to the transmission case to remove the No. 1 brake piston.
HINT:
If the piston does not pop out with compressed air, lift the piston out with needle-nose pliers.

(b) Remove the 2 O-rings from the No. 1 brake piston.

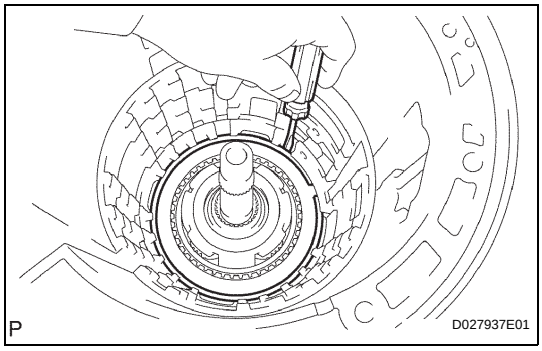

50. REMOVE NO. 2 BRAKE DISC

(a) Using a screwdriver, remove the snap ring from the case.

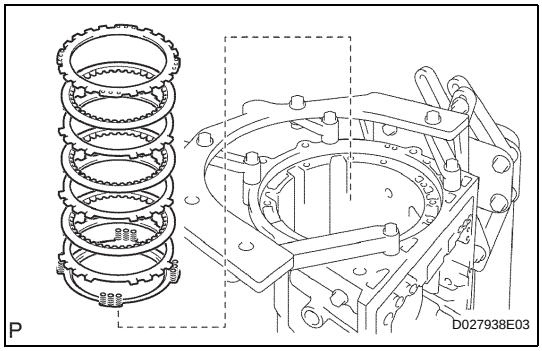

(b) Remove the flange, brake piston return spring, 3 discs and 3 plates from the case.

51. INSPECT NO. 2 BRAKE DISC (See page AT-219)

52. INSPECT NO.2 BRAKE PISTON RETURN SPRING SUB-ASSEMBLY (See page AT-219)

AT

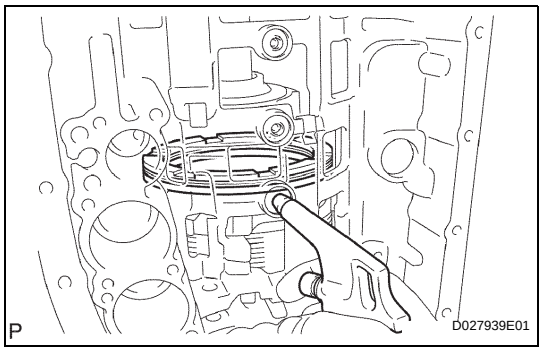

53. REMOVE NO. 2 BRAKE PISTON

(a) Hold the No. 2 brake piston and apply compressed air (392 kPa, 4 kgf/cm^2, 57 psi) to the transmission case to remove the No. 2 brake piston.
HINT:
If the piston does not pop out with compressed air, lift the piston out with needle-nose pliers.

(b) Remove the 2 O-rings from the No. 2 brake piston.

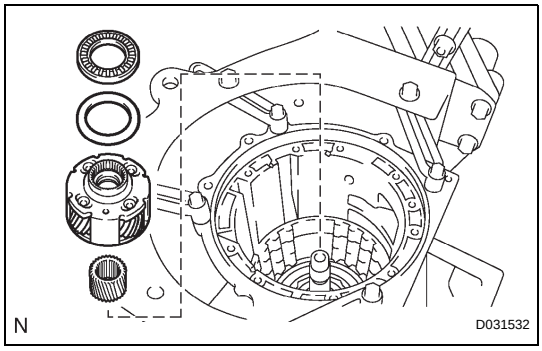

54. REMOVE CENTER PLANETARY GEAR ASSEMBLY

(a) Remove the center planetary gear assembly, planetary sun gear, thrust needle roller bearing and No. 4 thrust bearing race from the case.

55. INSPECT CENTER PLANETARY GEAR ASSEMBLY (See page AT-220)

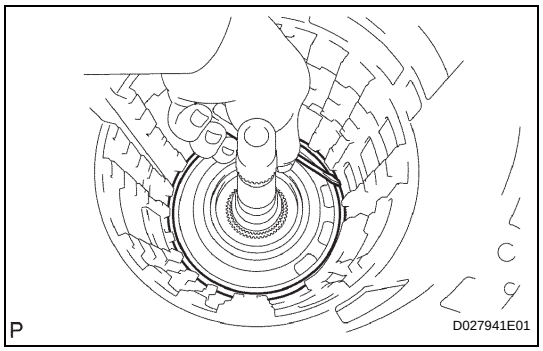

56. REMOVE INTERMEDIATE SHAFT

(a) Using a screwdriver, remove the snap ring from the case.

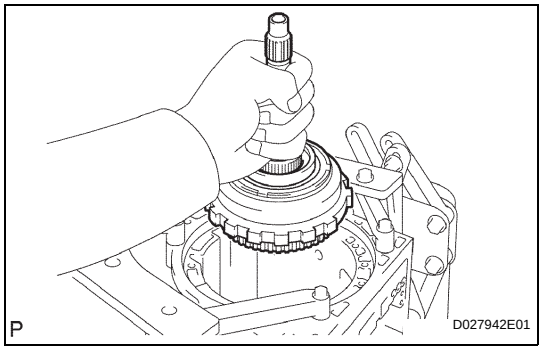

(b) Remove the intermediate shaft with the No. 3 1-way clutch assembly from the case.

57. INSPECT NO. 3 1-WAY CLUTCH ASSEMBLY (See page AT-220)

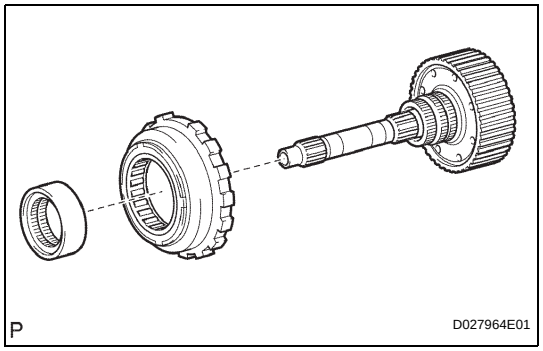

58. REMOVE NO. 3 1-WAY CLUTCH ASSEMBLY

(a) Remove the No. 3 1-way clutch assembly and 1-way clutch inner race from the intermediate shaft.

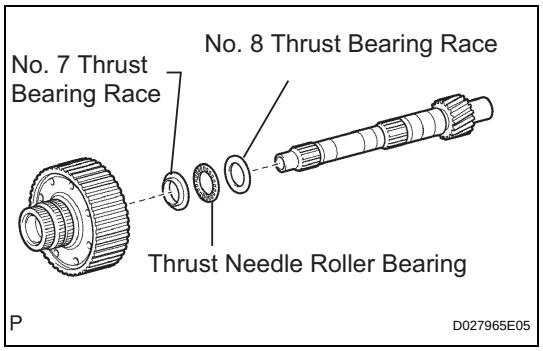

59. REMOVE REAR PLANETARY RING GEAR FLANGE SUB-ASSEMBLY

(a) Remove the No. 8 thrust bearing race, thrust needle roller bearing, No. 7 thrust bearing race and rear planetary ring gear flange from the intermediate shaft.

60. INSPECT REAR PLANETARY RING GEAR FLANGE SUB-ASSEMBLY (See page AT-220)

61. INSPECT INTERMEDIATE SHAFT (See page AT-220)

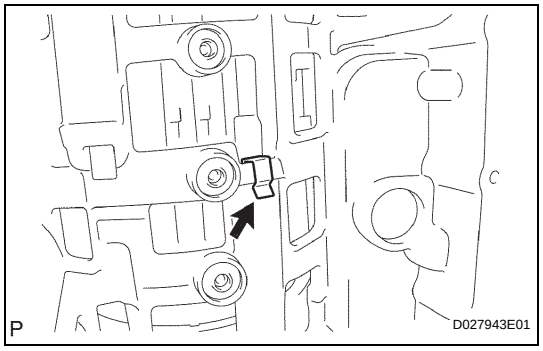

62. REMOVE BRAKE PLATE STOPPER SPRING

(a) Remove the brake plate stopper spring from the case.

AT

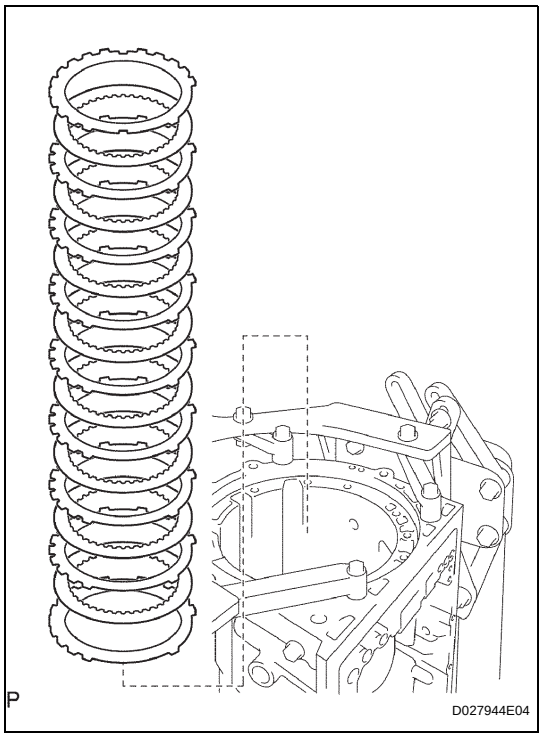

63. REMOVE NO. 4 BRAKE DISC

(a) Remove the 7 plates, 8 discs and 2 flanges from the case.

64. INSPECT NO. 4 BRAKE DISC (See page AT-221)

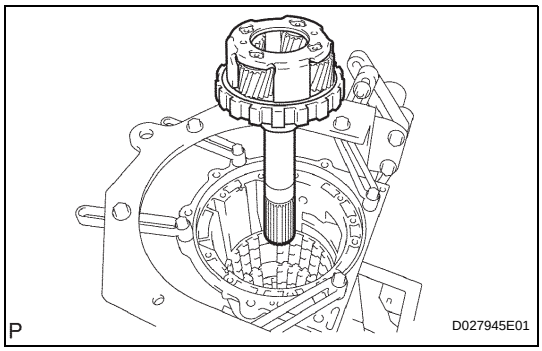

65. REMOVE REAR PLANETARY GEAR ASSEMBLY

(a) Remove the rear planetary gear assembly from the case.

AT

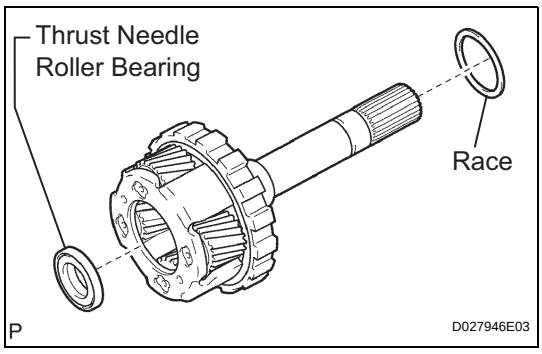

(b) Remove the No. 9 thrust bearing race and thrust needle roller bearing from the rear planetary gear assembly.

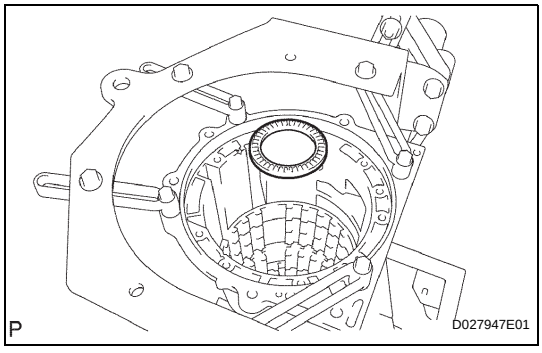

(c) Remove the thrust needle roller bearing from the case.

66. INSPECT REAR PLANETARY GEAR ASSEMBLY (See page AT-221)

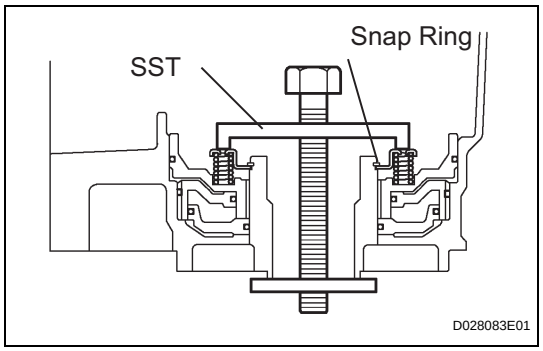

67. REMOVE 1ST AND REVERSE BRAKE RETURN SPRING SUB-ASSEMBLY

(a) Place SST on the spring retainer and compress the brake return spring.
SST 09350-30020 (09350-07050)

(b) Using SST, remove the snap ring and brake return spring.
SST 09350-30020 (09350-07070)

68. INSPECT 1ST AND REVERSE BRAKE RETURN SPRING SUB-ASSEMBLY (See page AT-222)

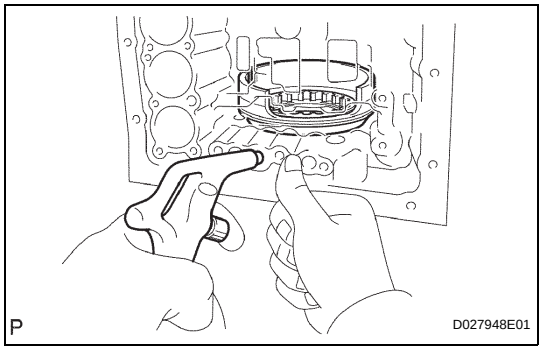

69. REMOVE 1ST AND REVERSE BRAKE PISTON

(a) Hold the 1st and reverse brake piston and apply compressed air (392 kPa, 4 kgf/cm^2, 57 psi) to the transmission case to remove the No. 2 brake piston.
HINT:
If the piston does not pop out with compressed air, lift the piston out with needle-nose pliers.

(b) Remove the O-ring from the 1st and reverse brake piston.

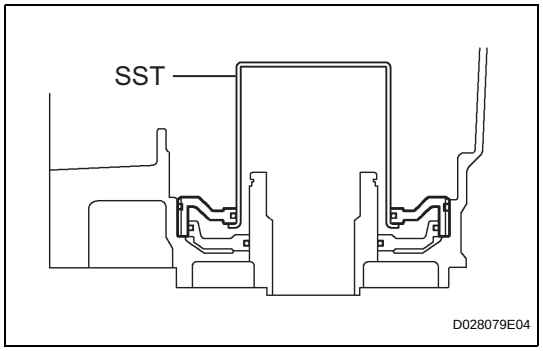

70. REMOVE BRAKE REACTION SLEEVE

(a) Using SST, remove the reaction sleeve.
SST 09350-30020 (09350-07080)

(b) Remove the O-ring from the reaction sleeve.

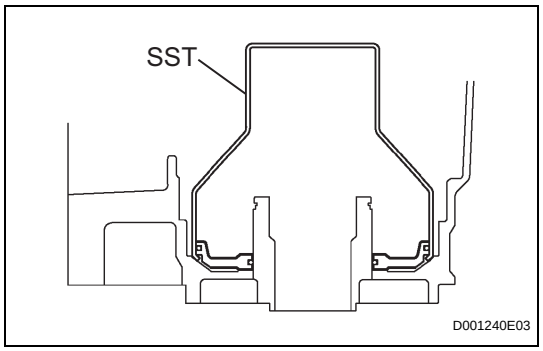

71. REMOVE NO. 4 BRAKE PISTON

(a) Using SST, remove the No. 4 brake piston.
SST 09350-30020 (09350-07090)

(b) Remove the 2 O-rings from the No. 4 piston.

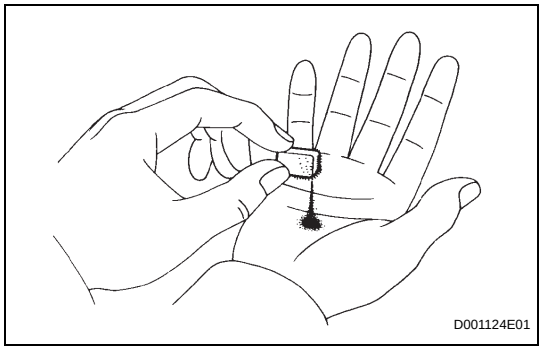

INSPECTION

1. INSPECT AUTOMATIC TRANSMISSION OIL PAN SUB-ASSEMBLY

(a) Remove the magnets, and use them to collect steel particles.

(b) Carefully look at the foreign matter and particles in the pan and on the magnets to anticipate the type of wear you will find in the transmission.
- Steel (magnetic): bearing, gear and clutch plate wear
- Brass (non-magnetic): bushing wear

AT

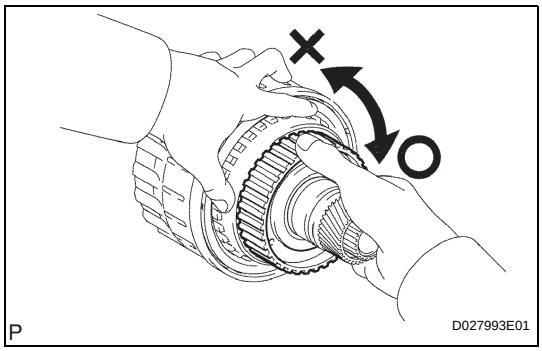

2. INSPECT NO. 2 1-WAY CLUTCH ASSEMBLY

(a) Hold the reverse clutch hub and turn the No. 2 1-way clutch assembly.

(b) Check that the No. 2 1-way clutch assembly turns freely clockwise and locks when turned counterclockwise.

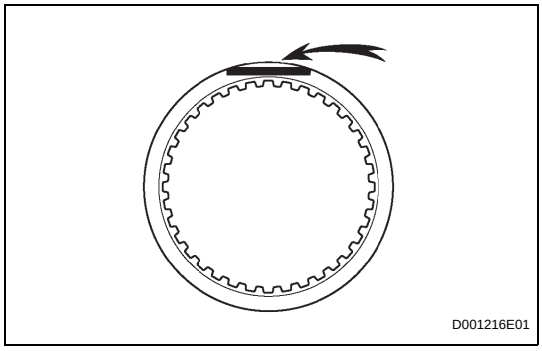

3. INSPECT NO. 3 BRAKE DISC

(a) Replace all discs if one of the following problems is present: 1) a disc, plate or flange is worn or burnt, 2) the lining of a disc is peeled off or discolored, or 3) grooves or printed numbers have even slight damage.

NOTICE:

Before assembling new discs, soak them in ATF for at least 15 minutes.

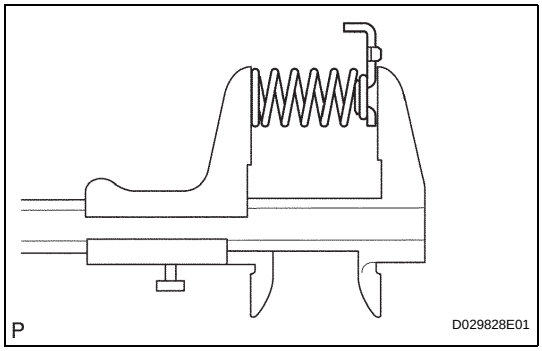

4. INSPECT NO. 3 BRAKE PISTON RETURN SPRING SUB-ASSEMBLY

(a) Using vernier calipers, measure the free length of the spring together with the spring seat.

Standard free length:

15.72 mm (0.619 in.)

AT

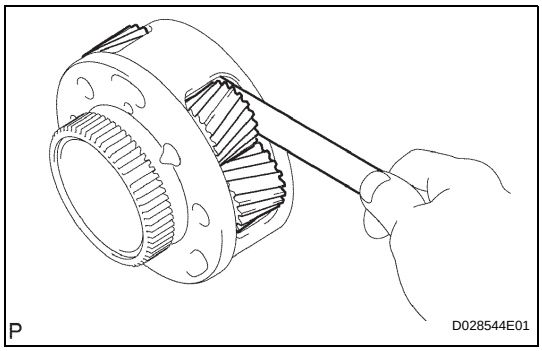

5. INSPECT FRONT PLANETARY GEAR ASSEMBLY

(a) Using a feeler gauge, measure the front planetary pinion gear thrust clearance.

Standard clearance:

0.2 to 0.60 mm (0.008 to 0.024 in.)

Maximum clearance:

0.65 mm (0.026 in.)

If the clearance is greater than the maximum, replace the front planetary gear assembly.

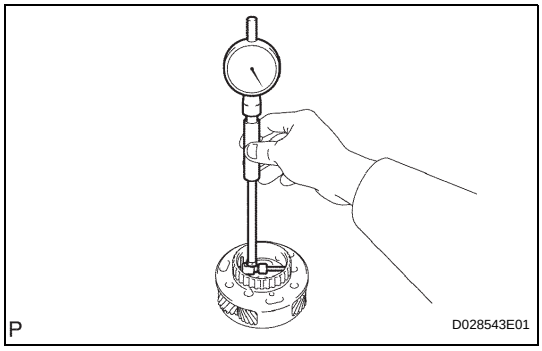

(b) Using a dial indicator, measure the inside diameter of the front planetary gear bushing.

Maximum inside diameter:

57.48 mm (2.263 in.)

If the inside diameter is greater than the maximum, replace the front planetary gear.

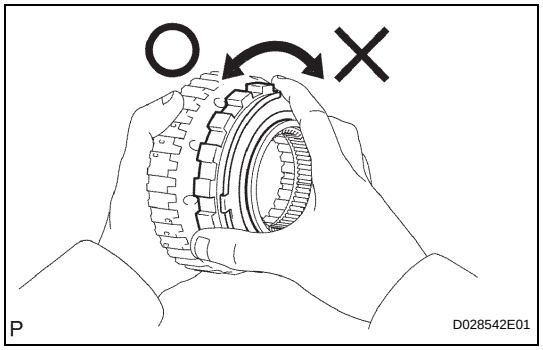

6. INSPECT 1-WAY CLUTCH ASSEMBLY

(a) Install the 1-way clutch assembly onto the 1-way clutch inner race.
(b) Hold the 1-way clutch inner race and turn the 1-way clutch assembly.
(c) Check that the 1-way clutch assembly turns freely counterclockwise and locks when turned clockwise.
(d) Remove the 1-way clutch assembly from the 1-way clutch inner race.

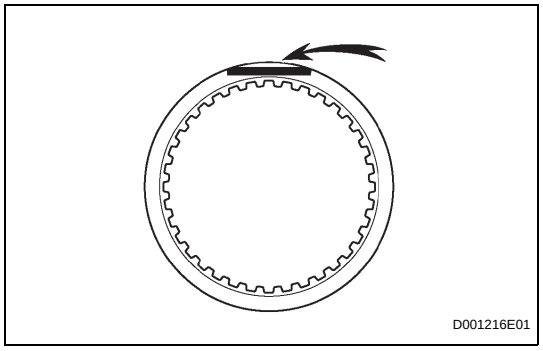

7. INSPECT NO. 1 BRAKE DISC

(a) Replace all discs if one of the following problems is present: 1) a disc, plate or flange is worn or burnt, 2) the lining of a disc is peeled off or discolored, or 3) grooves or printed numbers have even slight damage.
NOTICE:
Before assembling new discs, soak them in ATF for at least 15 minutes.

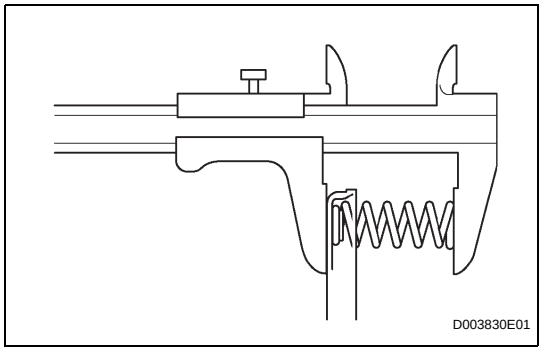

8. INSPECT BRAKE PISTON RETURN SPRING SUB-ASSEMBLY

(a) Using vernier calipers, measure the free length of the spring together with the spring seat.
Standard free length:
17.05 mm (0.671 in.)

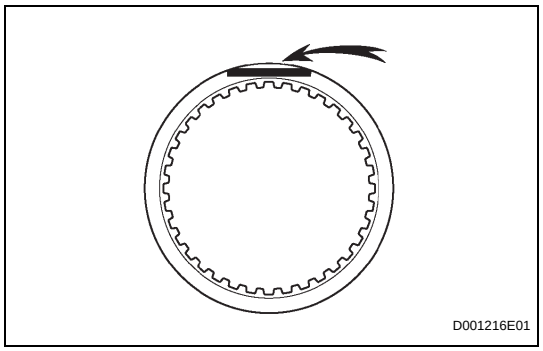

9. INSPECT NO. 2 BRAKE DISC

(a) Replace all discs if one of the following problems is present: 1) a disc, plate or flange is worn or burnt, 2) the lining of a disc is peeled off or discolored, or 3) grooves or printed numbers have even slight damage.
NOTICE:
Before assembling new discs, soak them in ATF for at least 15 minutes.

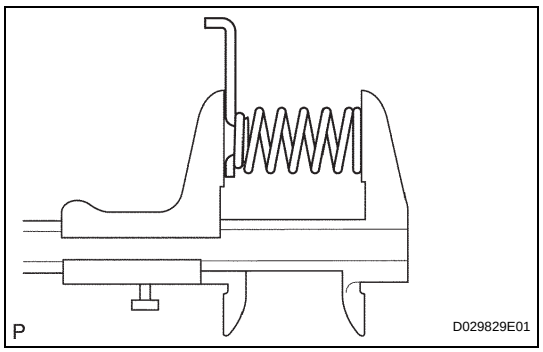

10. INSPECT NO. 2 BRAKE PISTON RETURN SPRING SUB-ASSEMBLY

(a) Using vernier calipers, measure the free length of the spring together with the spring seat.
Standard free length:
17.45 mm (0.687 in.)

AT

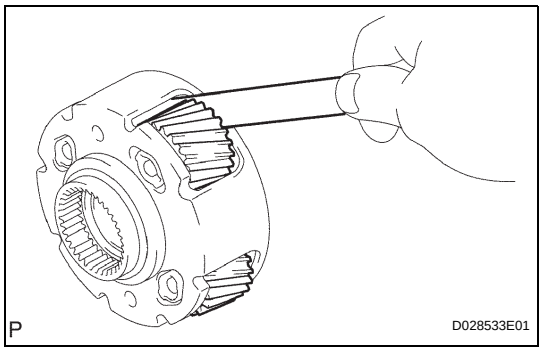

11. INSPECT CENTER PLANETARY GEAR ASSEMBLY

(a) Using a feeler gauge, measure the center planetary gear pinion thrust clearance.

Standard clearance:
0.12 to 0.68 mm (0.005 to 0.027 in.)
Maximum clearance:
0.73 mm (0.029 in.)

If the clearance is greater than the maximum, replace the center planetary gear assembly.

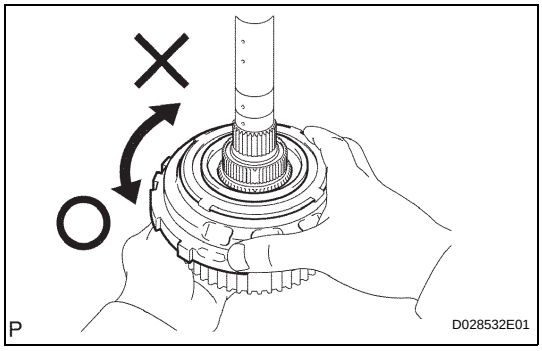

12. INSPECT NO. 3 1-WAY CLUTCH ASSEMBLY

(a) Hold the rear planetary ring gear flange sub assembly and turn the 1-way clutch assembly.

(b) Check that the 1-way clutch assembly turns freely counterclockwise and locks when turned clockwise.

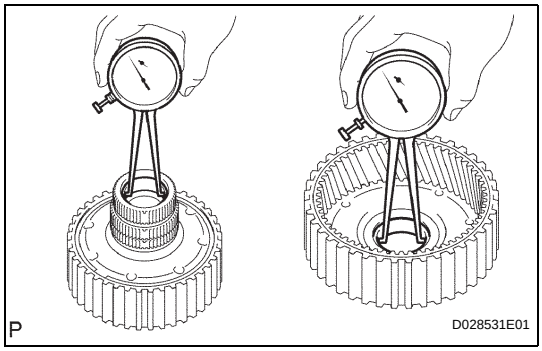

13. INSPECT REAR PLANETARY RING GEAR FLANGE SUB-ASSEMBLY

(a) Using a dial indicator, measure the inside diameter of the rear planetary ring gear bushing.

Maximum inside diameter:
32.18 mm (1.2667 in.)

If the inside diameter is greater than the maximum, replace the rear planetary ring gear.

AT

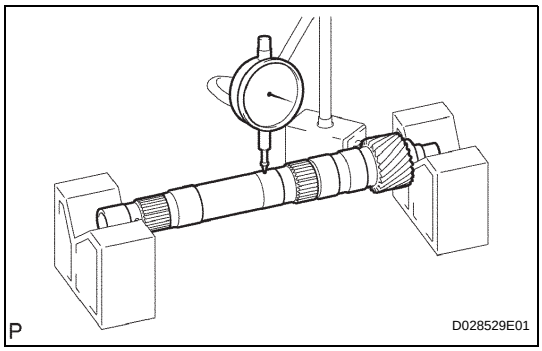

14. INSPECT INTERMEDIATE SHAFT

(a) Using a dial indicator, check the intermediate shaft runout.

Maximum runout:
0.08 mm (0.003 in.)
NOTICE:
If the bend exceeds the specification, replace the intermediate shaft with a new one.

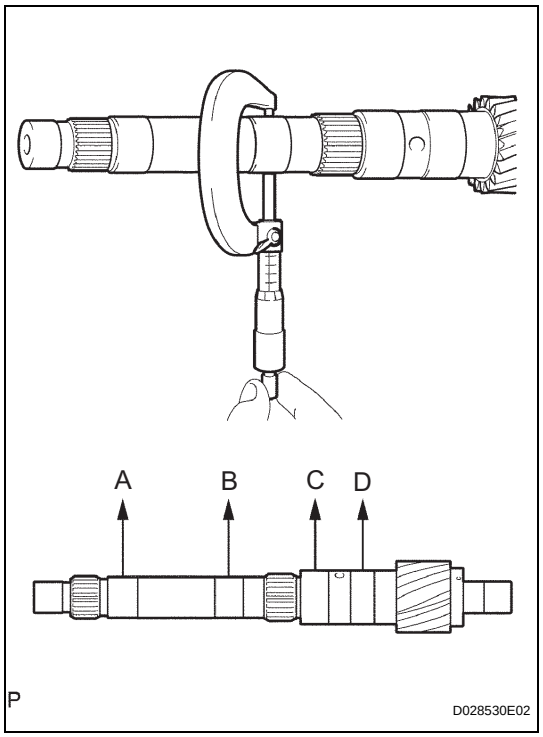

(b) Using a micrometer, check the outer diameter of the intermediate shaft positions shown in the diagram.

Standard diameter:

A:

25.962 to 25.975 mm (1.022 to 1.023 in.)

B:

25.962 to 25.975 mm (1.022 to 1.023 in.)

C:

32.062 to 32.075 mm (1.262 to 1.263 in.)

D:

32.062 to 32.075 mm (1.262 to 1.263 in.)

Minimum diameter:

A:

25.912 mm (1.020 in.)

B:

25.912 mm (1.020in.)

C:

32.012 mm (1.260 in.)

D:

32.012 mm (1.260 in.)

NOTICE:

If the outer diameter is outside the standard, replace the intermediate shaft with a new one.

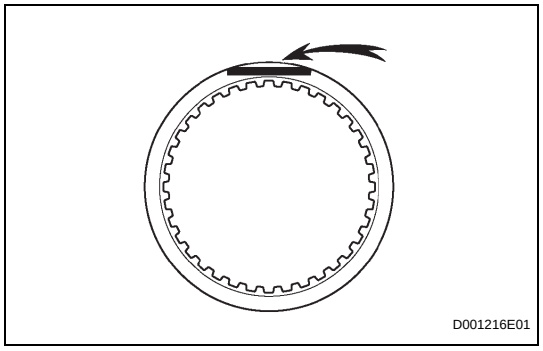

15. INSPECT NO. 4 BRAKE DISC

(a) Replace all discs if one of the following problems is present: 1) a disc, plate or flange is worn or burnt, 2) the lining of a disc is peeled off or discolored, or 3) grooves or printed numbers have even slight damage.

NOTICE:

Before assembling new discs, soak them in ATF for at least 15 minutes.

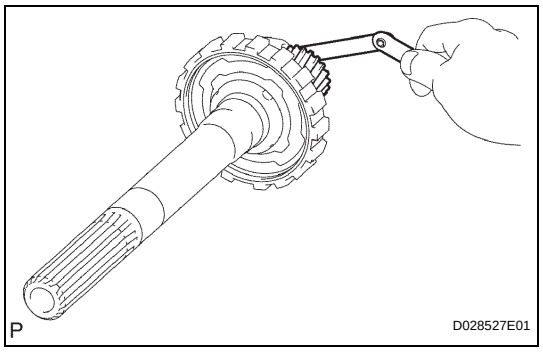

16. INSPECT REAR PLANETARY GEAR ASSEMBLY

(a) Using a feeler gauge, measure the rear planetary gear pinion thrust clearance.

Standard clearance:

0.2 to 0.6 mm (0.008 to 0.024 in.)

Maximum clearance:

0.65 mm (0.026 in.)

If the clearance is greater than the maximum, replace the planetary gear assembly.

AT

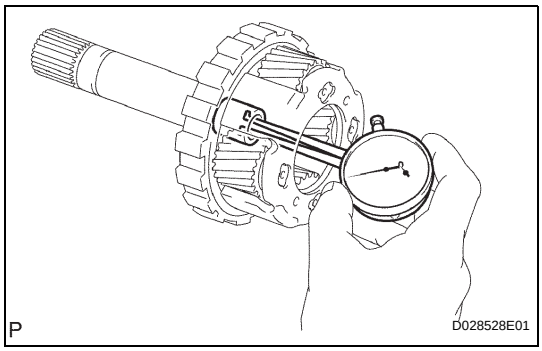

(b) Using a dial indicator, measure the inside diameter of the rear planetary gear bushing.
Maximum inside diameter:
20.075 mm (0.7904 in.)
If the inside diameter is greater than the maximum, replace the rear planetary gear assembly.

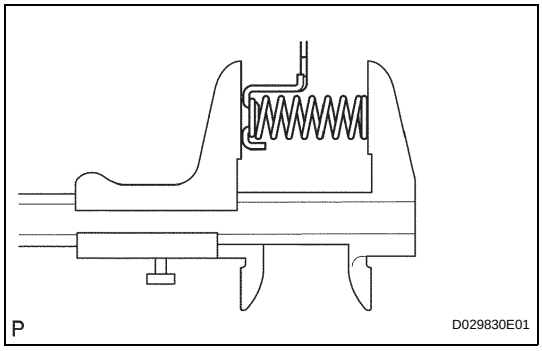

17. INSPECT 1ST AND REVERSE BRAKE RETURN SPRING SUB-ASSEMBLY

(a) Using vernier calipers, measure the free length of the spring together with the spring seat.
Standard free length:
23.74 mm (0.9347 in.)

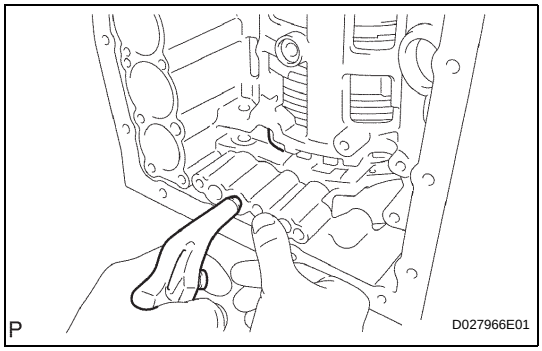

18. INSPECT PACK CLEARANCE OF FIRST AND REVERSE BRAKE

(a) Make sure the 1st and reverse brake pistons move smoothly when applying and releasing the compressed air into the transmission case.

AT

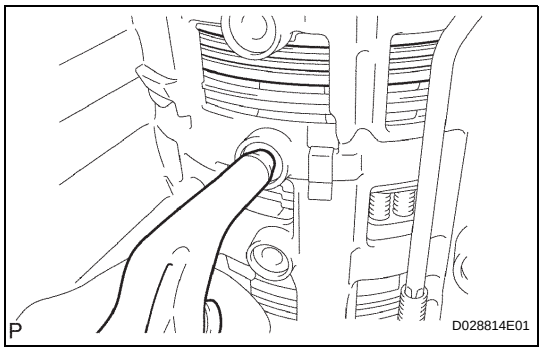

19. INSPECT NO. 1 PISTON STROKE OF BRAKE PISTON

(a) Make sure the No. 1 brake piston moves smoothly when applying and releasing the compressed air into the transmission case.

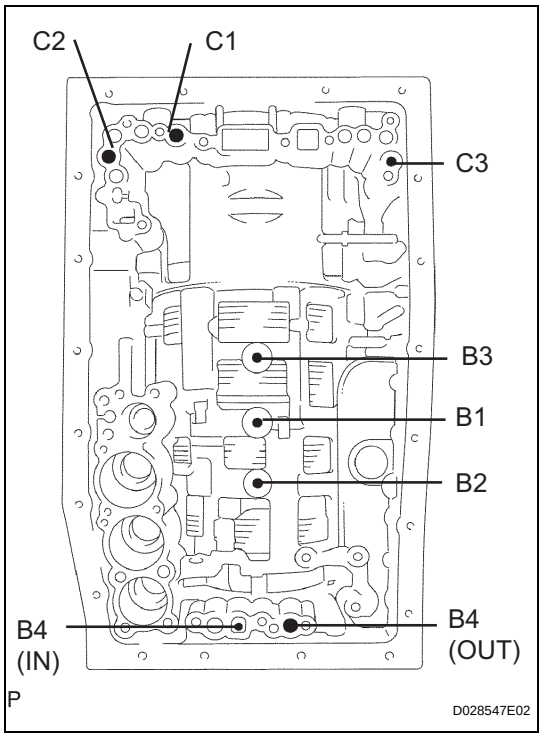

20. INSPECT INDIVIDUAL PISTON OPERATION
INSPECTION

(a) Check the operating sound while applying compressed air into the oil holes indicated in the illustration.
HINT:
When inspecting the O/D direct clutch, use the C3 accumulator piston holes indicated in the illustration. If there is no sound, disassemble and check the installation condition of the parts.
(1) No. 2 clutch (C2)
(2) No. 3 clutch (C3)
(3) No. 1clutch (C1)
(4) No. 3 brake (B3)
(5) No. 1 brake (B1)
(6) No. 2 brake (B2)
(7) No. 4 brake (B4)

REASSEMBLY

1. BEARING POSITION

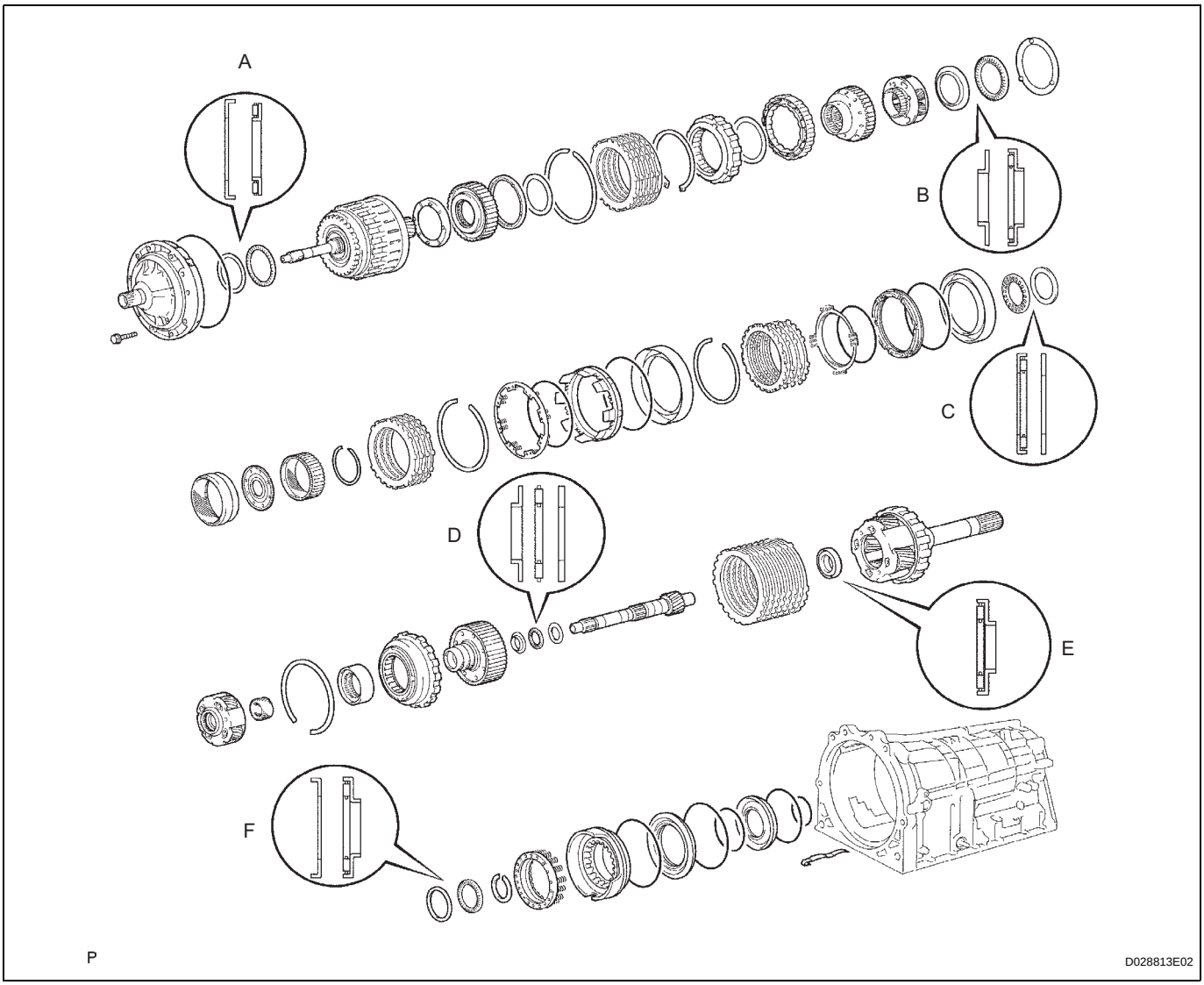

AT

Bearing diameter

Mark	Front Race Diameter Inside / Outside	Thrust Bearing Diameter Inside / Outside	Rear Race Diameter Inside / Outside
A	73.6 mm (2.898 in.) / 102.0 mm (4.016 in.)	71.9 mm (2.831 in.) / 85.6 mm (3.370 in.)	-
B	38.0 mm (1.496 in.) / 57.0 mm (2.244 in.)	43.4 mm (1.709 in.) / 58.3 mm (2.295 in.)	-
C	-	55.7 mm (2.193 in.) / 76.4 mm (3.008 in.)	53.7 mm (2.114 in.) / 74.0 mm (2.913 in.)
D	33.4 mm (1.315 in.) / 49.0 mm (1.929 in.)	32.1 mm (1.264 in.) / 49.35 mm (1.943 in.)	32.1 mm (1.2649 in.)/ 49.0 mm (1.929 in.)
E	-	21.5 mm(0.847 in.) / 40.8 mm (1.606 in.)	-
F	48.5 mm (1.909 in.) / 62.7 mm (2.469 in.)	45.9 mm (1.807 in.) / 64.0 mm (2.520 in.)	-

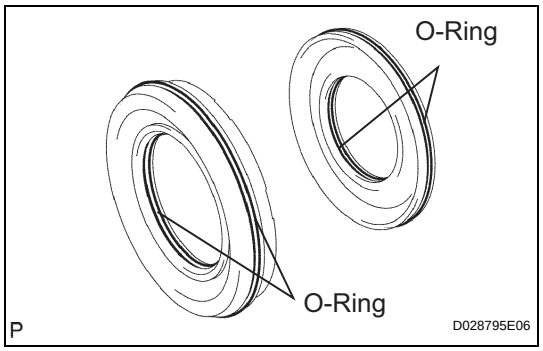

2. INSTALL NO. 4 BRAKE PISTON

(a) Coat 2 new O-rings with ATF, and install them onto the brake reaction sleeve.

(b) Coat 2 new O-rings with ATF, and install them onto the No. 4 brake piston.

(c) Install the No. 4 brake piston onto the reaction sleeve.

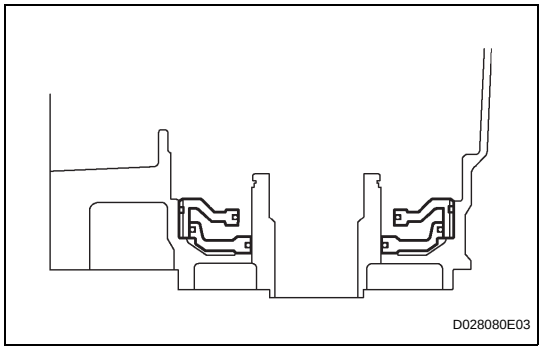

3. INSTALL BRAKE REACTION SLEEVE

(a) Coat a new O-ring with ATF, and install it to the reaction sleeve.

(b) With the No. 1 brake piston underneath (the rear side), install the brake reaction sleeve and No. 1 brake piston onto the transmission case.

NOTICE:

Be careful not to damage the O-rings.

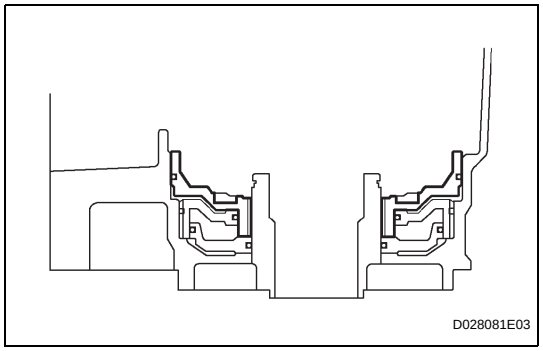

4. INSTALL 1ST AND REVERSE BRAKE PISTON

(a) Coat a new O-ring with ATF.

(b) Install the O-ring onto the 1st and reverse brake piston.

(c) With the spring seat of the piston facing upward (the front side), place the piston in the transmission case.

NOTICE:

Be careful not to damage the O-ring.

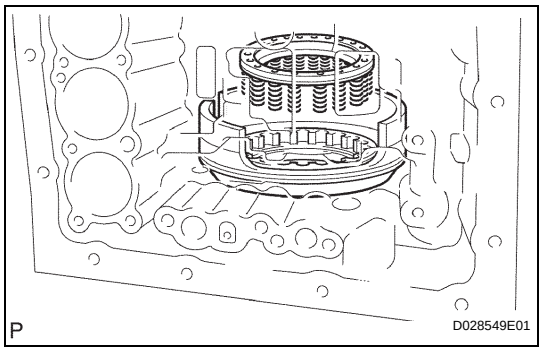

(d) Place the piston return spring onto the 1st and reverse brake piston.

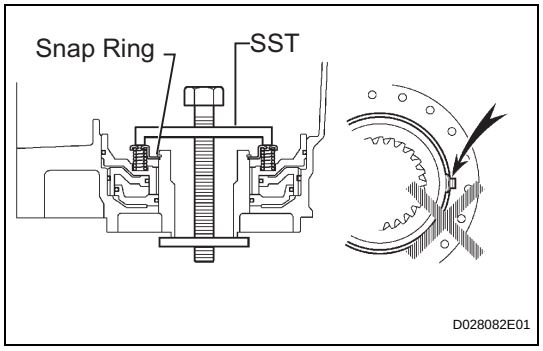

5. INSTALL 1ST AND REVERSE BRAKE RETURN SPRING SUB-ASSEMBLY

(a) Place SST on the spring retainer, and compress the return spring.

SST 09350-30020 (09350-07050)

(b) Using SST, install the snap ring.

SST 09350-30020 (09350-07070)

AT

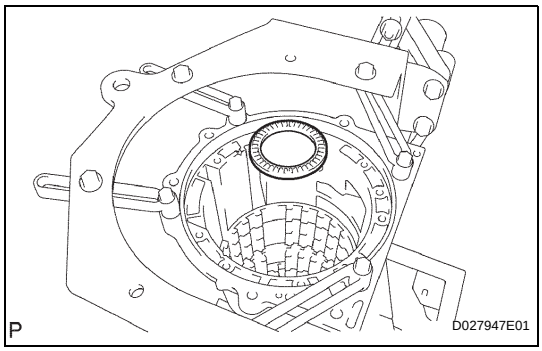

6. INSTALL REAR PLANETARY GEAR ASSEMBLY

(a) Install the thrust needle roller bearing.

Thrust needle roller bearing diameter

Item	Inside	Outside
Thrust needle roller bearing	45.9 mm (1.807 in.)	64.0 mm (2.520 in.)

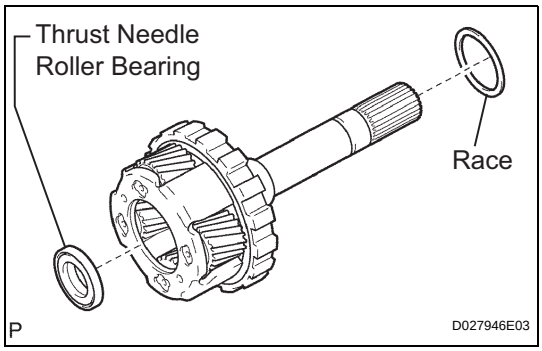

(b) Install the thrust needle roller bearing.

(c) Coat the No. 9 thrust bearing race with petroleum jelly, and install it onto the rear planetary ring gear.

Bearing and race diameter

Item	Inside	Outside
Bearing	21.5 mm (0.847 in.)	40.8 mm (1.606 in.)
Race	48.5 mm (1.909 in.)	62.7 mm (2.469 in.)

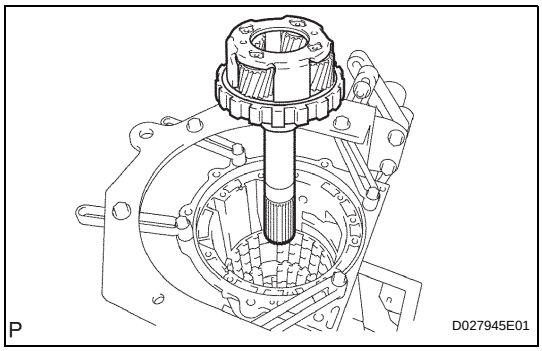

(d) Install the rear planetary gear assembly.

AT

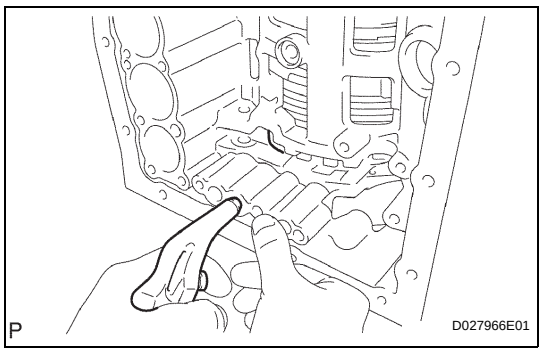

7. INSPECT PACK CLEARANCE OF FIRST AND REVERSE BRAKE

(a) Make sure the 1st and reverse brake pistons move smoothly when applying and releasing the compressed air into the transmission case.

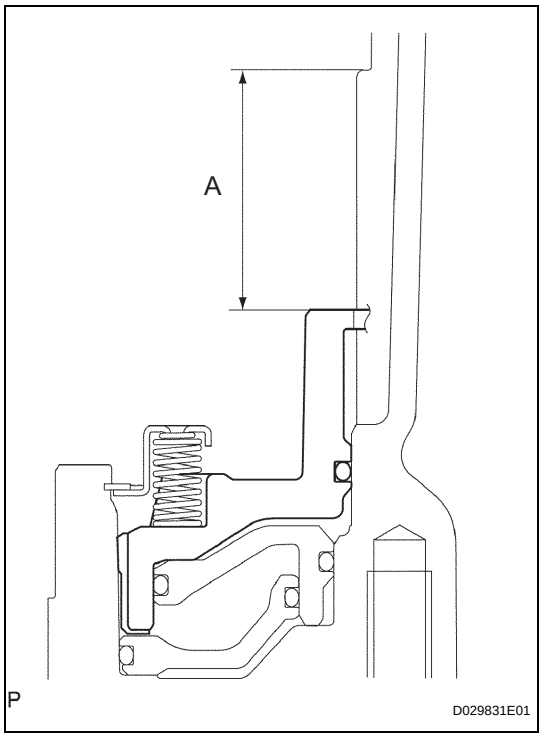

(b) Using vernier calipers, measure the level difference (length A) between the upper surface of the 1st and reverse brake piston and the hitting surface of the No. 4 brake flange at both ends across a diameter, and calculate the average.

NOTICE:

The 1st and reverse brake piston must be installed tightly to the end face of the transmission case.

HINT:

Length A = 36.35 to 37.09 mm (1.431 to 1.460 in.)

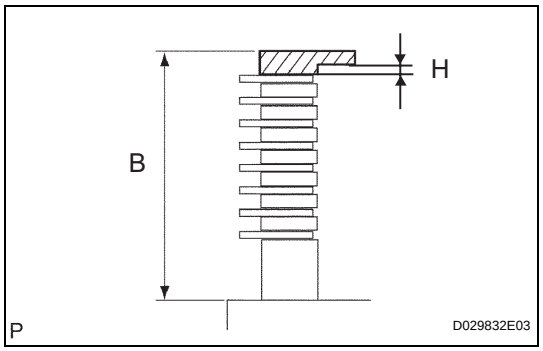

(c) Using vernier calipers, measure the thickness (length B) of the 2 brake flanges, the 7 No. 4brake plates and the 8 No. 4 brake discs altogether at both ends across a diameter, and calculate the average.

HINT:

Pack clearance = Length A - Length B - 0.25 mm - 1.8 mm

Length B = 36.04 to 37.14 mm (1.419 to 1.462 in.)

Pack clearance:

0.8 to 1.1 mm (0.031 to 0.043 in.)

(d) If the pack clearance is outside the standard, select and install a brake flange that makes the pack clearance within the standard.

H thickness

No.	Thickness	No.	Thickness
0	0 mm (0 in.)	8	0.8 mm (0.032 in.)
2	0.2 mm(0.008 in.)	10	1.0 mm (0.039 in.)
4	0.4 mm (0.016 in.)	12	1.2 mm (0.047 in.)
6	0.6 mm (0.024 in.)	14	1.4 mm (0.055 in.)

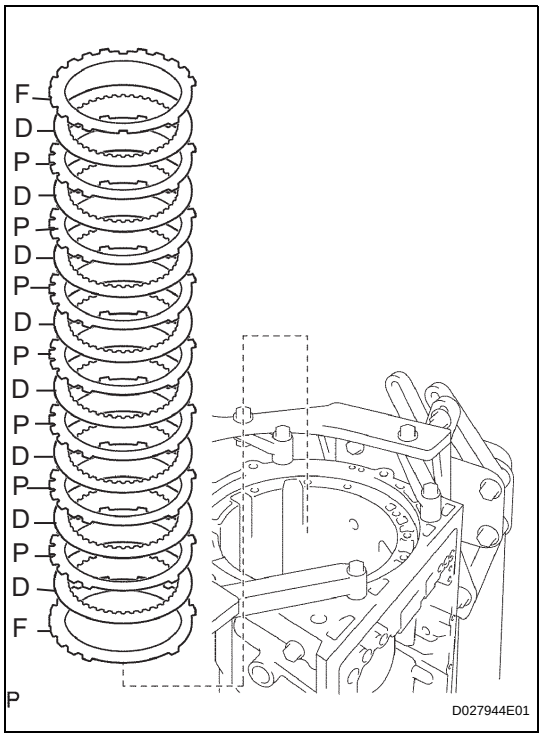

8. INSTALL NO. 4 BRAKE DISC

(a) Install the 7 plates, 8 discs and 2 flanges.

Install in order:

F - D - P - D - P - D- P - D -P - D - P - D - P - D - P - D - F

HINT:

P = Plate, D = Disc, F = Flange

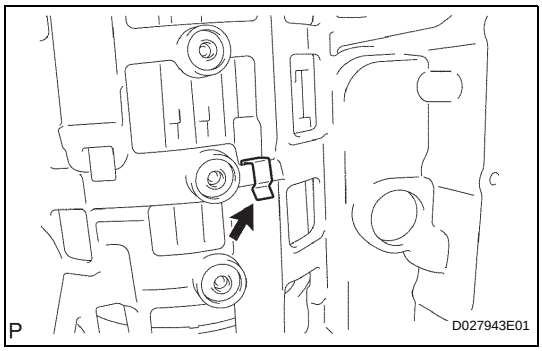

9. INSTALL BRAKE PLATE STOPPER SPRING

(a) Install the brake stopper spring.

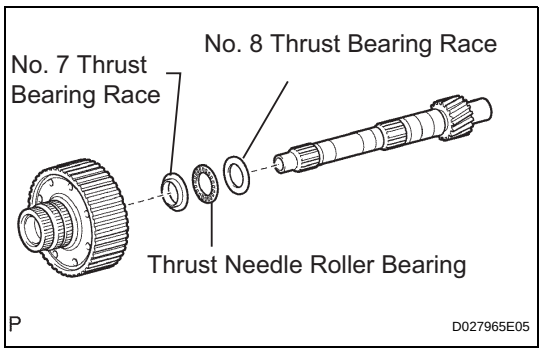

10. INSTALL REAR PLANETARY RING GEAR FLANGE SUB-ASSEMBLY

(a) Install the No. 8 thrust bearing race, thrust needle roller bearing, No. 7 thrust bearing race and planetary ring gear flange onto the intermediate shaft.

Bearing and race diameter mm (in.)

Item	Inside	Outside
No. 7 thrust bearing race	**33.4 (1.315)**	**49.0 (1.929)**
Thrust needle roller bearing	**32.1 (1.264)**	**49.35 (1.943)**
No. 8 thrust bearing race	**32.1 (1.264)**	**49.0 (1.929)**

AT

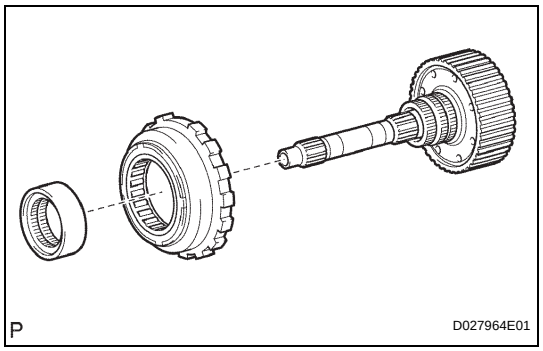

11. INSTALL NO. 3 1-WAY CLUTCH ASSEMBLY

(a) Install the No. 3 1-way clutch assembly and the 1-way clutch inner race onto the intermediate shaft.

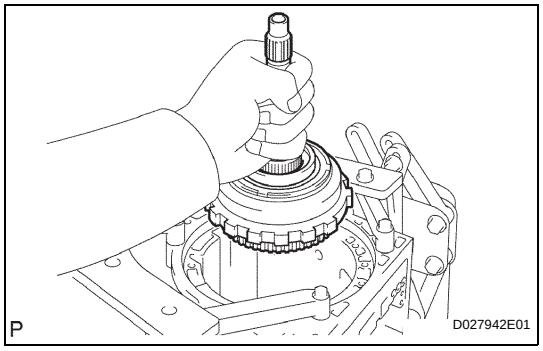

12. INSTALL INTERMEDIATE SHAFT

(a) Install the intermediate shaft with the No. 3 1-way clutch assembly onto the case.

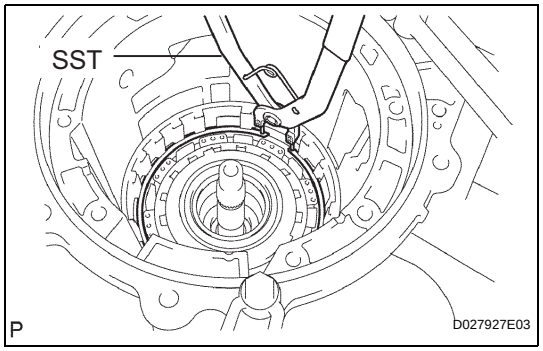

(b) Using SST, install the snap ring.
SST 09350-30020 (09350-07050, 09350-07060)

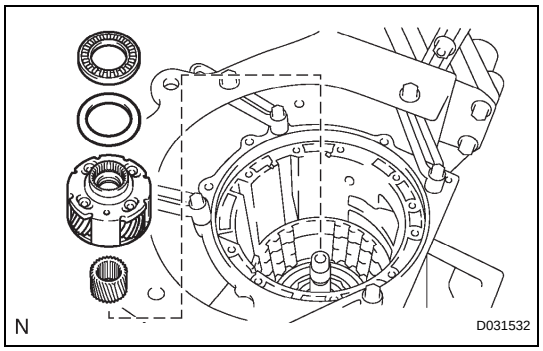

13. INSTALL CENTER PLANETARY GEAR ASSEMBLY

(a) Install the center planetary gear assembly and planetary sun gear into the case.

(b) Coat the No. 4 thrust bearing race and thrust needle roller bearing with petroleum jelly, and install them onto the center planetary ring gear.
Race and Bearing diameter

Item	Inside	Outside
Race	53.7 mm (2.114 in.)	74.0 mm (2.913 in.)
Bearing	55.7 mm (2.192 in.)	76.4 mm (3.008 in.)

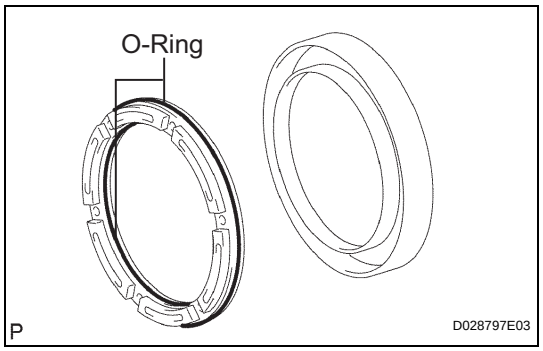

14. INSTALL NO. 2 BRAKE PISTON

(a) Coat 2 new O-rings with ATF, and install them onto the No. 2 brake piston.

(b) Be careful not to damage the O-rings. Press the No. 2 brake piston into the No. 2 brake cylinder with both hands.

(c) Install the No. 2 brake piston onto the case.

AT

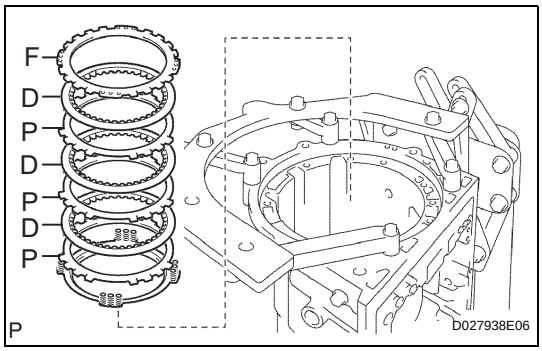

15. INSTALL NO. 2 BRAKE DISC

(a) Install the flange, 3 plates, 3 discs and brake piston return spring.
Install in order:
F - D- P- D- P- D- P
HINT:
P = Plate, D = Disc, F = Flange

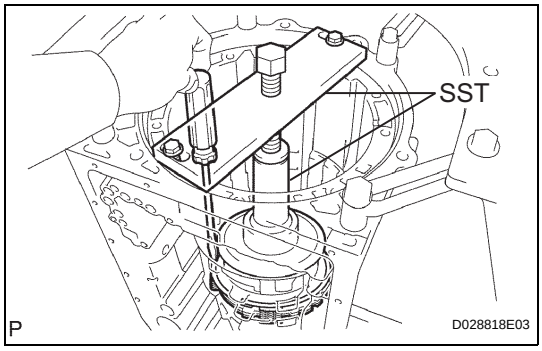

(b) Using SST and press, install the No. 2 brake spring snap ring.
SST 09351-40010

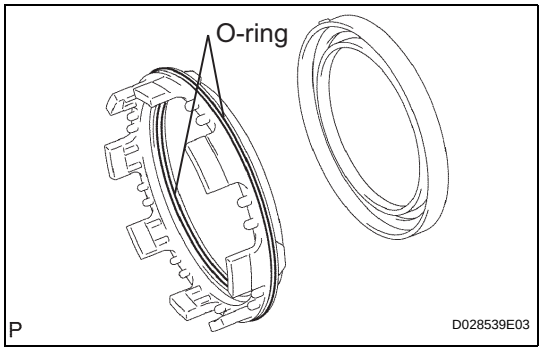

16. INSTALL NO. 1 BRAKE PISTON

(a) Coat 2 new O-rings with ATF, and install them onto the No. 1 brake piston.
(b) Be careful not to damage the O-rings. Press the No. 1 brake piston into the No. 1 brake cylinder with both hands.

AT

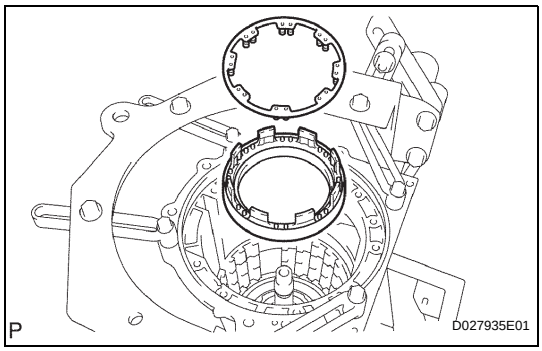

17. INSTALL BRAKE PISTON RETURN SPRING SUB-ASSEMBLY

(a) Install the brake piston return spring and No. 1 brake piston with the No. 1 brake cylinder into the transmission case.

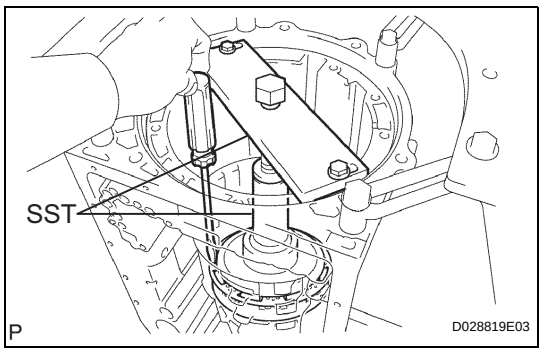

18. INSTALL BRAKE PISTON RETURN SPRING SNAP RING

(a) Using SST and a press, install the brake piston return spring snap ring.
SST 09351-40010

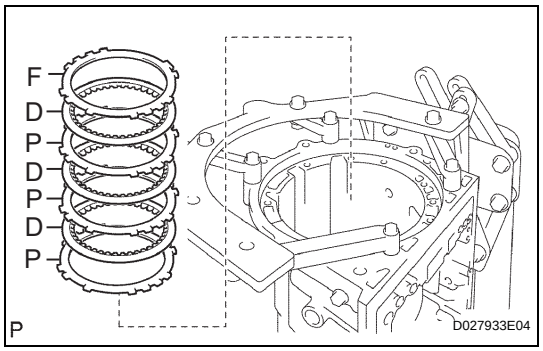

19. INSTALL NO. 1 BRAKE DISC

(a) Install the 3 plates, 3 discs and flange.
Install in order:
F - D - P - D - P - D - P
HINT:
P = Plate, D = Disc, F = Flange

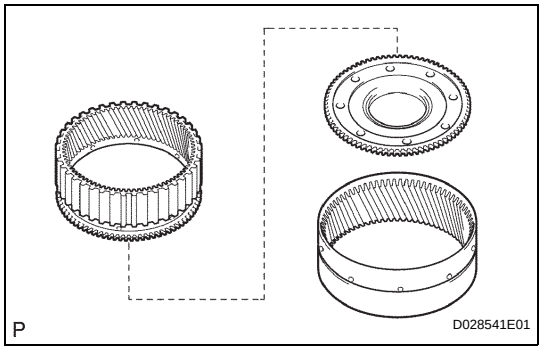

20. INSTALL CENTER PLANETARY RING GEAR

(a) Install the center planetary ring gear and front planetary ring gear flange into the front planetary ring gear.

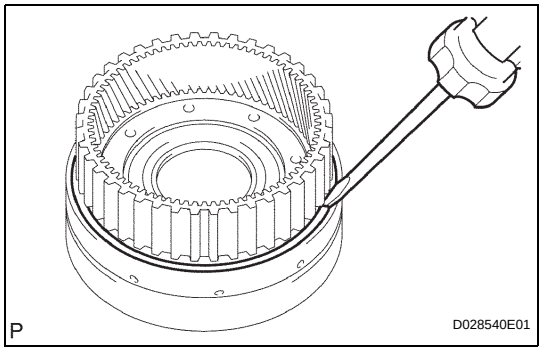

(b) Using a screwdriver, install the snap ring.

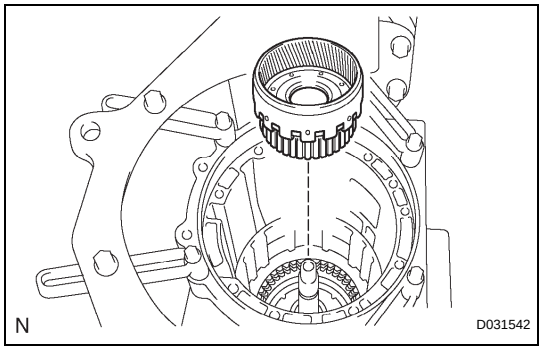

21. INSTALL FRONT PLANETARY RING GEAR

(a) Install the front planetary ring gear into the case.

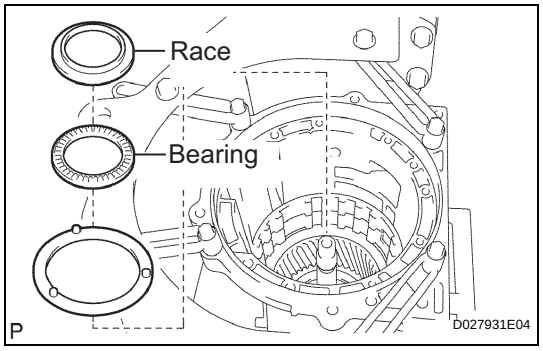

22. INSTALL FRONT PLANETARY GEAR ASSEMBLY

(a) Install the thrust needle roller bearing and No. 2 planetary carrier thrust washer.

(b) Coat the No. 3 thrust bearing race with petroleum jelly, and install it onto the front planetary ring gear.
Thrust needle roller bearing and race diameter

Item	Inside	Outside
Thrust needle roller bearing	43.4 mm (1.709 in.)	58.3 mm (2.295 in.)
Race	38.0 mm (1.496 in.)	57.0 mm (2.244 in.)

AT

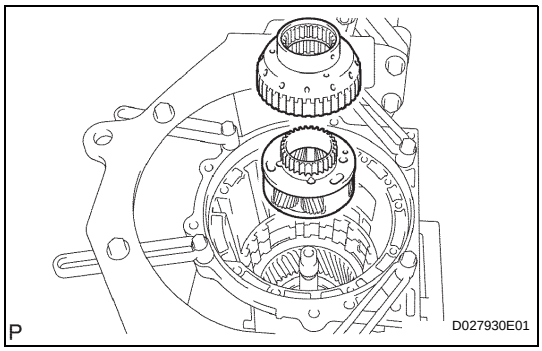

(c) Install the front planetary gear assembly and 1-way clutch inner race into the case.

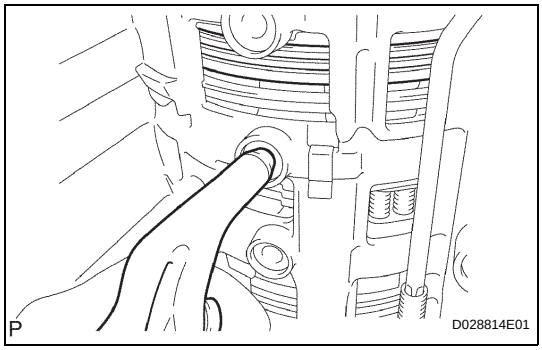

23. INSPECT NO. 1 PISTON STROKE OF BRAKE PISTON

(a) Make sure the No. 1 brake piston moves smoothly when applying and releasing the compressed air into the transmission case.

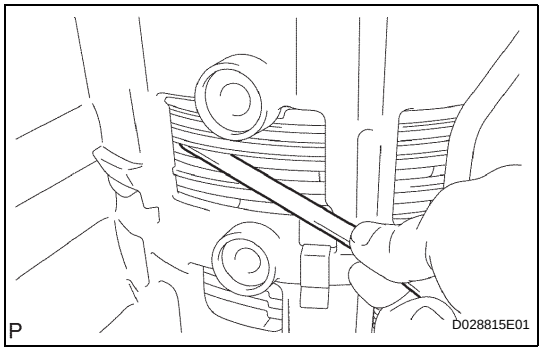

(b) Using a feeler gauge, measure the B3 brake pack clearance between the snap ring and flange.
Piston stroke:
0.42 to 0.72 mm (0.017 to 0.028 in.)
If the piston stroke is outside the specification, parts may have been assembled incorrectly.
Perform the reassembly again.
If the piston stroke is still outside the specification, select another flange.
HINT:
There are 4 different thicknesses for the flange.
Flange thickness

No.	Thickness	No.	Thickness
0	2.0 mm (0.079 in.)	2	2.4 mm (0.094 in.)
1	2.2 mm (0.087 in.)	3	2.6 mm (0.102 in.)

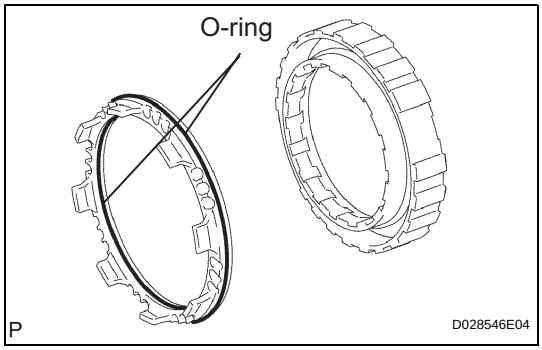

24. INSTALL 2ND BRAKE PISTON

(a) Coat 2 new O-rings with ATF, and install them onto the 2nd brake piston.

(b) Be careful not to damage the O-rings. Press the 2nd brake cylinder into the 2nd brake piston with both hands.

AT

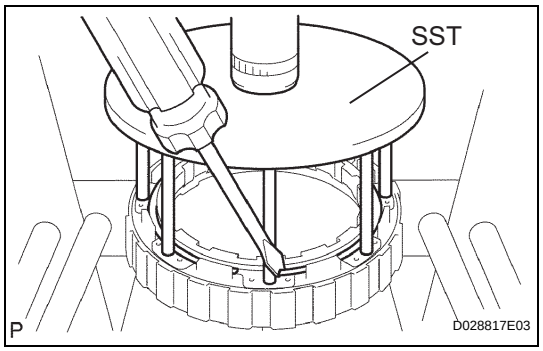

(c) Using SST and press, install the snap ring.
SST 09351-40010
NOTICE:
Make sure that the end gap of the snap ring is not aligned with the spring retainer claw.

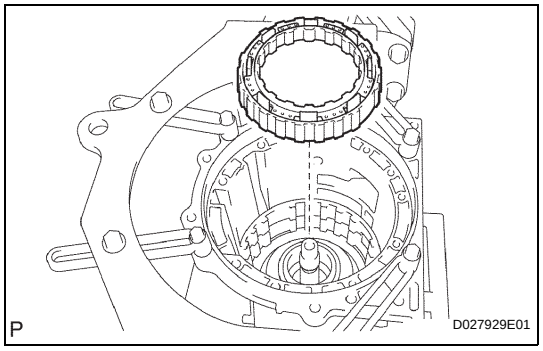

25. INSTALL 2ND BRAKE CYLINDER
(a) Install the 2nd brake cylinder into the case.

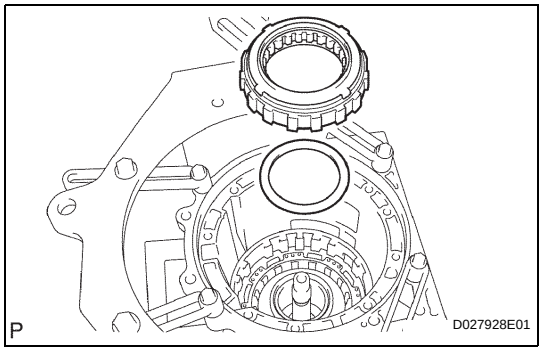

26. INSTALL 1-WAY CLUTCH ASSEMBLY
(a) Install the 1-way clutch assembly and the thrust washer into the case.

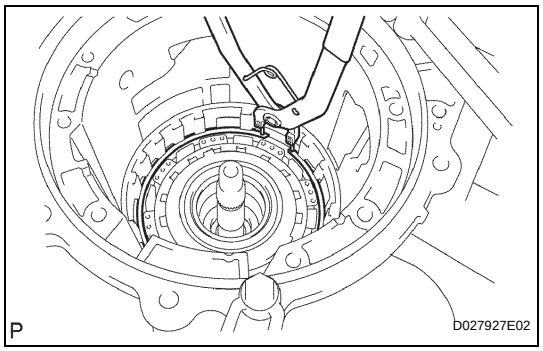

27. INSTALL 2ND BRAKE PISTON HOLE SNAP RING
(a) Using SST, install the snap ring.
SST 09350-30020 (09350-07060)

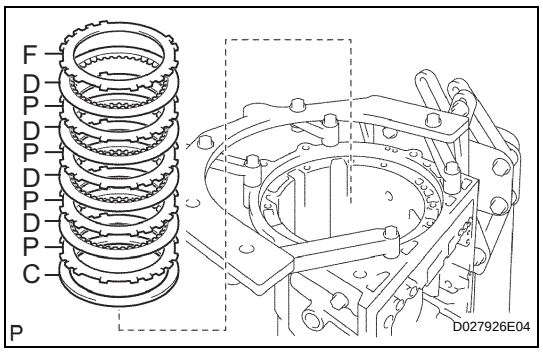

28. INSTALL NO. 3 BRAKE DISC
(a) Install the flanges, 4 discs, 4 plates and the cushion plate onto the case.
Install in order:
F - D - P - D - P - D - P - D - P - C
HINT:
P = Plate, D = Disc, F = Flange C = Cushion

AT

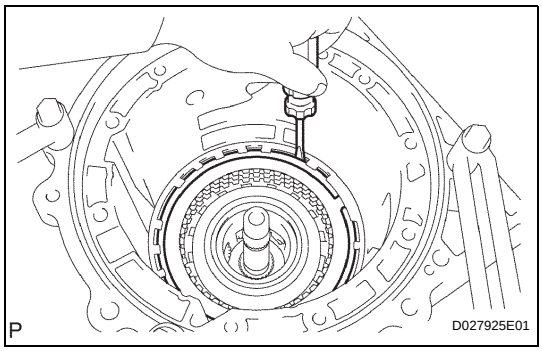

29. INSTALL NO. 3 BRAKE SNAP RING

(a) Using a screwdriver, install the snap ring.

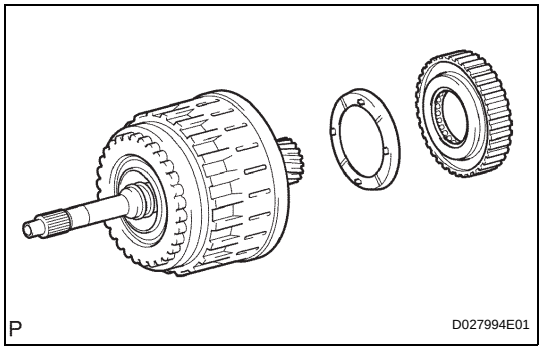

30. INSTALL NO. 2 1-WAY CLUTCH ASSEMBLY

(a) Coat the race with petroleum jelly and install it onto the No. 2 clutch drum thrust washer.

(b) Install the No. 2 1-way clutch assembly washer.

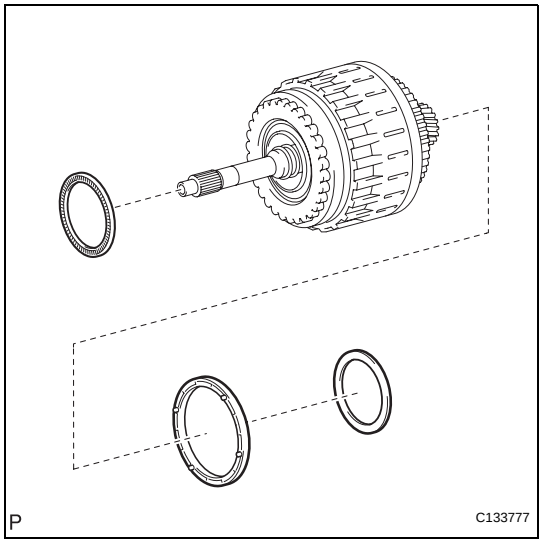

31. INSTALL CLUTCH DRUM AND INPUT SHAFT ASSEMBLY

(a) Install the thrust needle roller bearing.

(b) Coat the race with petroleum jelly and install it onto the clutch drum thrust washer.

Thrust needle roller bearing and diameter

Item	Inside	Outside
Thrust needle roller bearing	71.9 mm (2.831 in.)	85.6 mm (3.370 in.)
Race	73.6 mm (2.898 in.)	102.0 mm (4.016 in.)

(c) Install the clutch drum thrust washer and race onto the clutch drum and input shaft assembly.

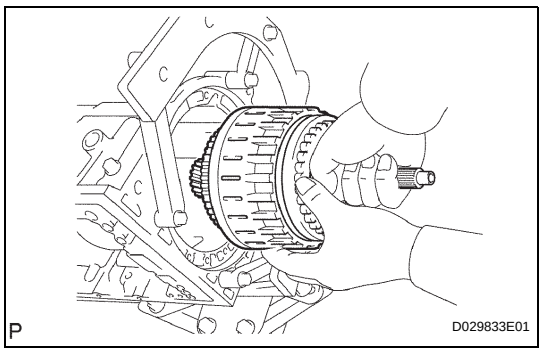

(d) Install the input shaft sub-assembly with the direct and reverse multiple disc assembly onto the transmission case.

AT

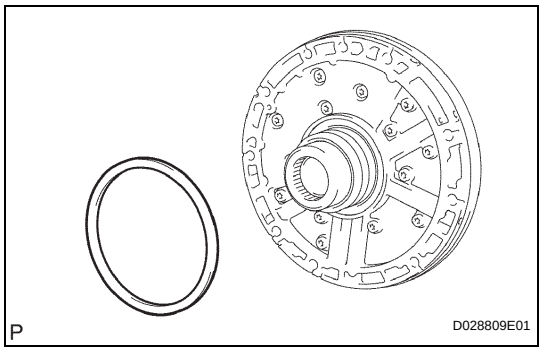

32. INSTALL OIL PUMP ASSEMBLY

(a) Install the No. 1 thrust bearing race onto the front oil pump.

No. 1 thrust bearing race diameter

Item	Inside	Outside
Race	74.2 mm (2.921in.)	87.74 mm (3.454 in.)

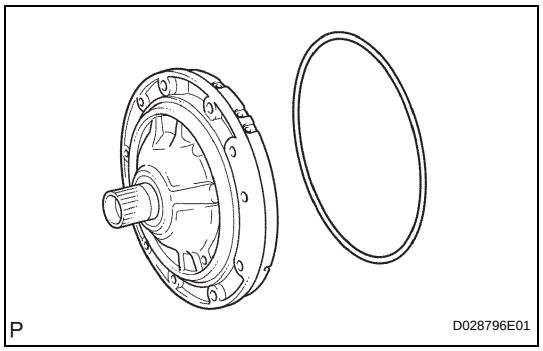

(b) Coat a new O-ring with ATF, and install it onto the oil pump assembly.

(c) Place the oil pump through the input shaft, and align the bolt holes in the oil pump assembly with the transmission case.

(d) Hold the input shaft, and lightly press the oil pump body to slide the oil seal rings into the overdrive direct clutch drum.

NOTICE:

Do not push on the oil pump strongly, as the oil seal ring will stick to the direct clutch drum.

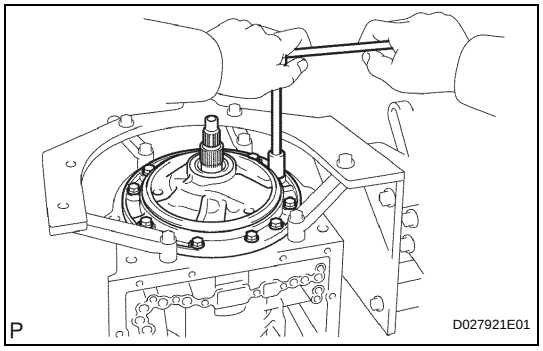

(e) Install the 10 bolts.

Torque: 21 N*m (214 kgf*cm, 15 ft.*lbf)

33. INSTALL MANUAL VALVE LEVER SHAFT OIL SEAL

(a) Using SST, tap in 2 new oil seals.

SST 09350-30020 (09350-07110)

(b) Coat the oil seal lips with MP grease.

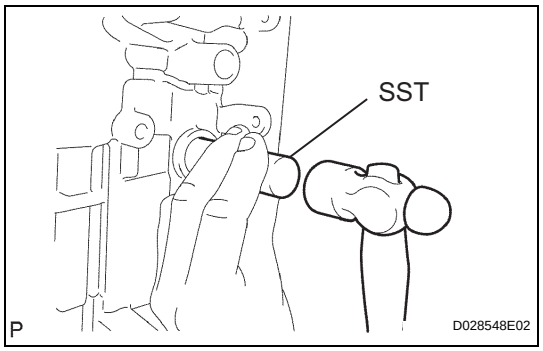

34. INSPECT INDIVIDUAL PISTON OPERATION

INSPECTION (See page AT-223)

35. INSTALL MANUAL VALVE LEVER SUB-ASSEMBLY

(a) Install a new spacer onto the manual valve lever.

(b) Install the manual valve lever shaft onto the transmission case through the manual valve lever.

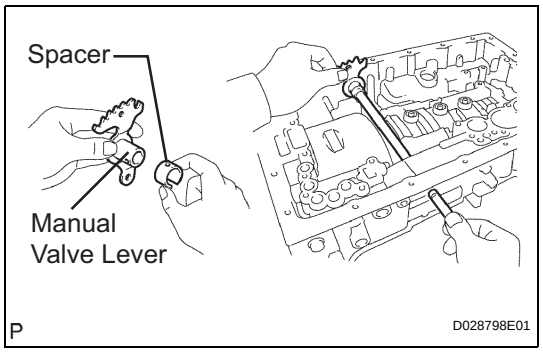

AT

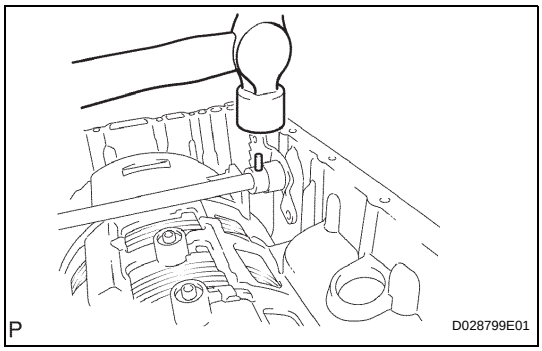

(c) Using a hammer, tap in a new spring pin.

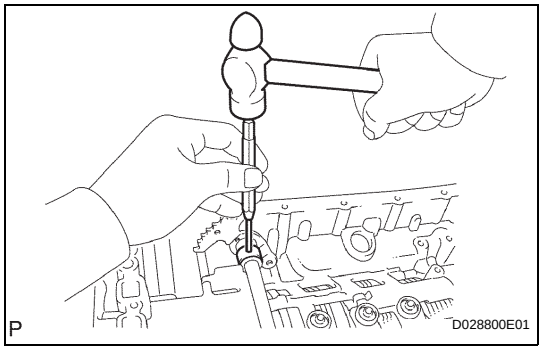

(d) Align the manual valve lever indentation with the spacer hole, and stake them together with a punch and hammer.
(e) Make sure the shaft rotates smoothly.

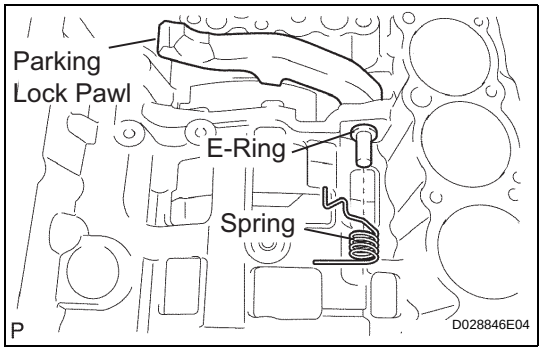

36. INSTALL PARKING LOCK PAWL SHAFT
(a) Install the E-ring onto the shaft.
(b) Install the parking lock pawl, shaft and spring.

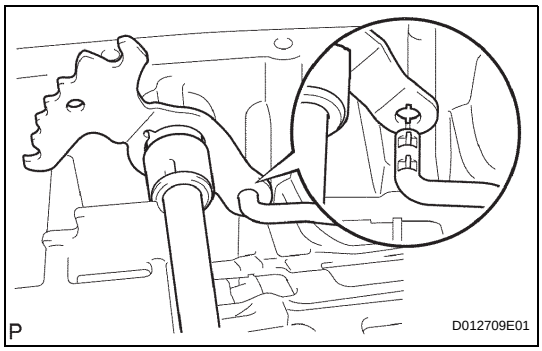

37. INSTALL PARKING LOCK ROD SUB-ASSEMBLY
(a) Connect the parking lock rod to the manual valve lever.

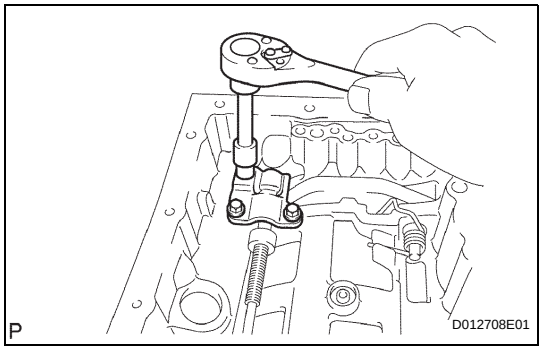

38. INSTALL PARKING LOCK PAWL BRACKET
(a) Place the parking lock pawl bracket onto the transmission case and tighten the 3 bolts.
Torque: 7.4 N*m (75 kgf*cm, 65 in.*lbf)

AT

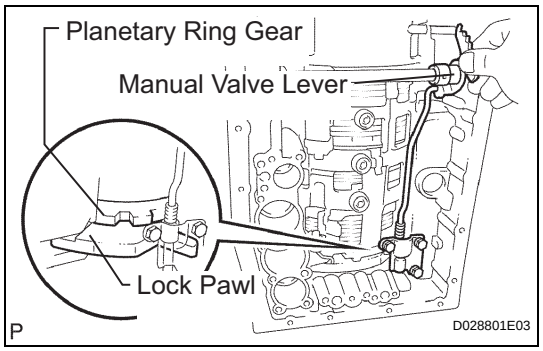

(b) Shift the manual valve lever to the P position, and confirm that the planetary ring gear is correctly locked up by the lock pawl.

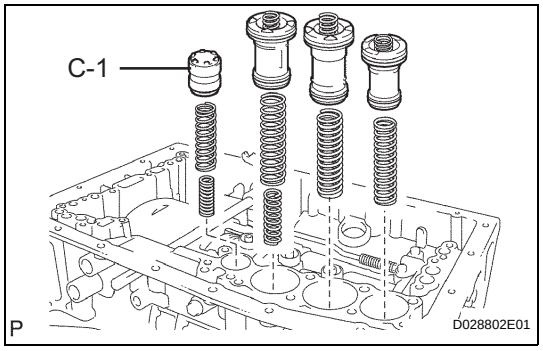

39. INSTALL C-1 ACCUMULATOR VALVE

(a) Coat a new O-ring with ATF, and install it onto the piston.

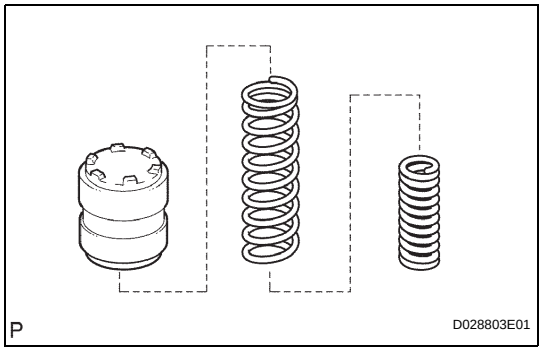

(b) Install the 2 springs and accumulator valve into the hole.

Accumulator spring

Spring	Free length Outer diameter	Color
C-1 Inner	30.40 mm (1.197 in.) 11.40 mm (0.449 in.)	Pink
C-1 Outer	48.76 mm (1.920 in.) 16.60 mm (0.654 in.)	Light green

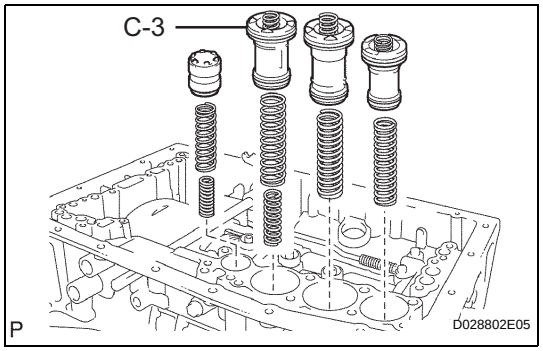

40. INSTALL C-3 ACCUMULATOR PISTON

(a) Coat a new O-ring with ATF, and install it into the piston.

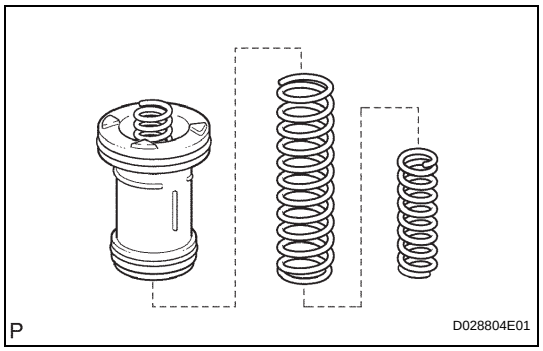

(b) Install the 2 springs and accumulator piston into the hole.

Accumulator spring

Spring	Free length Outer diameter	Color
C-3 Inner	44.0 mm (1.732 in.) 14.0 mm (0.551 in.)	Yellow
C-3 Outer	73.35 mm (2.888 in.) 19.90 mm (0.784 in.)	Red

AT

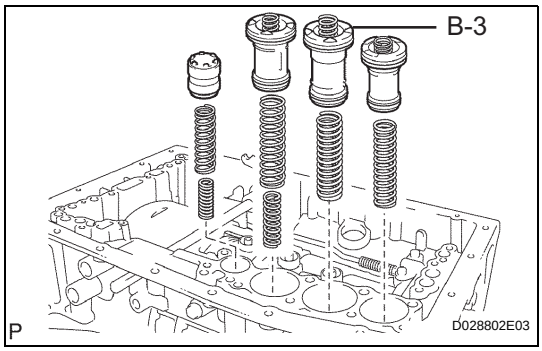

41. INSTALL B-3 ACCUMULATOR PISTON

(a) Coat 2 new O-rings with ATF, and install them onto the piston.

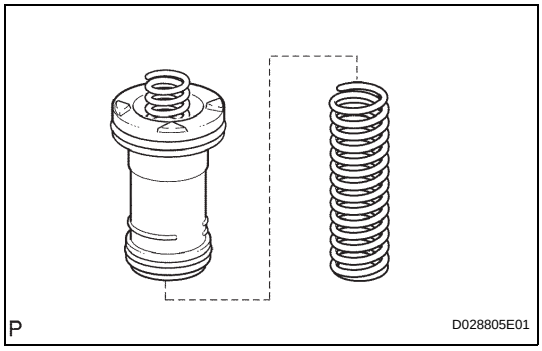

(b) Install the spring and accumulator piston into the hole.

Accumulator spring

Spring	Free length Outer diameter	Color
B-3	70.5 mm (2.776 in.) 19.7 mm (0.776 in.)	Purple

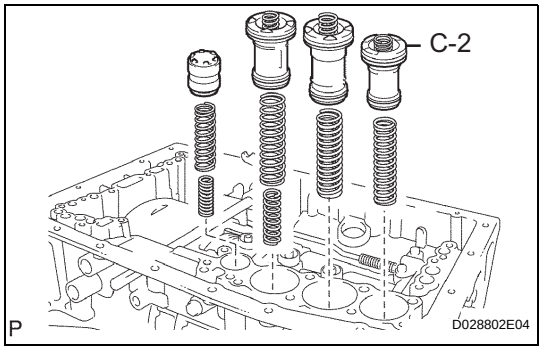

42. INSTALL C-2 ACCUMULATOR PISTON

(a) Coat 2 new O-rings with ATF, and install them onto the piston.

AT

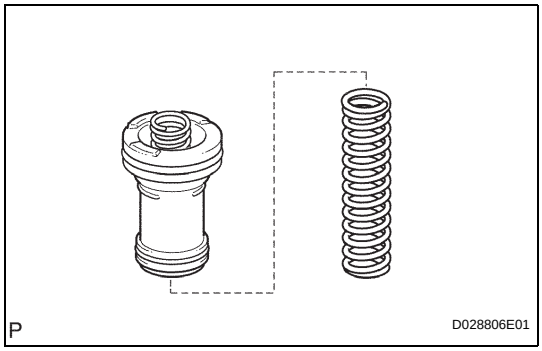

(b) Install the spring and accumulator piston into the hole.

Accumulator spring

Spring	Free length Outer diameter	Color
C-2	62.0 mm (2.441 in.) 15.9 mm (0.626 in.)	White

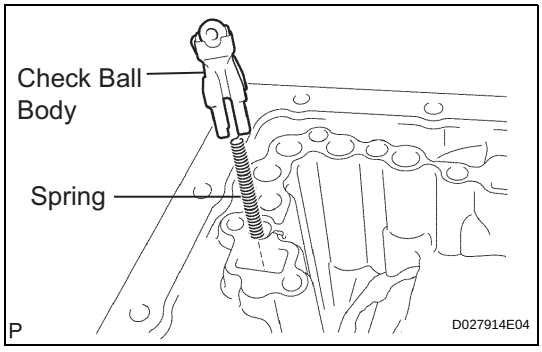

43. INSTALL CHECK BALL BODY

(a) Install the check ball body and spring.

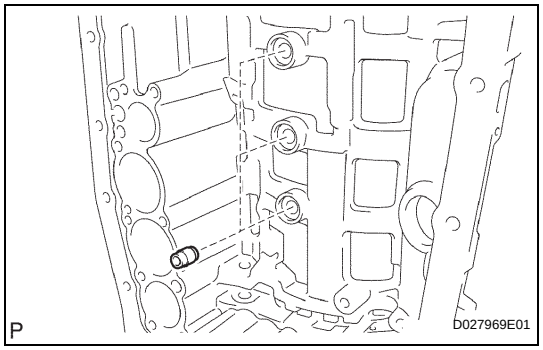

44. INSTALL BRAKE DRUM GASKET

(a) Install the 3 brake drum gaskets.

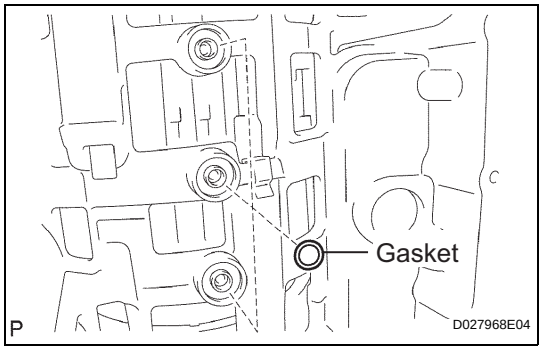

45. INSTALL TRANSAXLE CASE GASKET

(a) Install the 3 transaxle case gaskets.

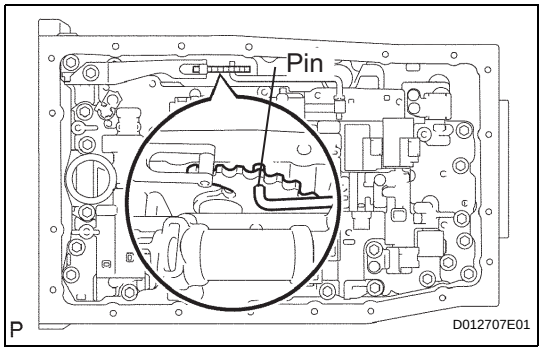

46. INSTALL TRANSMISSION VALVE BODY ASSEMBLY

(a) Align the groove of the manual valve with the pin of the lever.

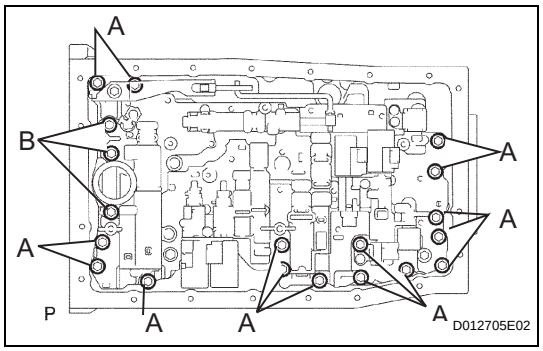

(b) Install the 19 bolts.
Torque: 11 N*m (112 kgf*cm, 8 ft.*lbf)
HINT:
Each bolt length is as indicated below.
Bolt length:
25 mm (0.98 in.) for bolt A
36 mm (1.42 in.) for bolt B

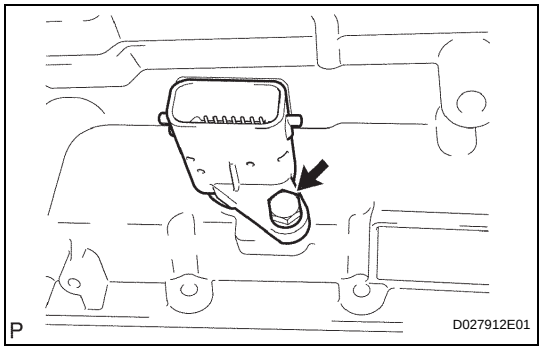

47. INSTALL TRANSMISSION WIRE

(a) Install a new O-ring onto the transmission wire.
(b) Install the transmission wire harness.
(c) Install the bolt.
Torque: 5.4 N*m (55 kgf*cm, 48 in.*lbf)
(d) Connect the solenoid connector.

AT

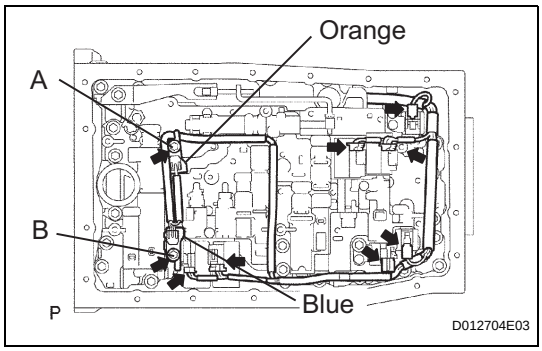

(e) Connect the 7 solenoid connectors.
(f) Install the ATF temperature sensor.
(g) Install the 2 clamps and the 2 bolts.
Torque: 10 N*m (100 kgf*cm, 7 ft.*lbf) for bolt A
11 N*m (112 kgf*cm, 8 ft.*lbf) for bolt B
HINT:
Each bolt length is indicated below.
Bolt length:
12 mm (0.47 in.) for bolt A
36 mm (1.42 in.) for bolt B

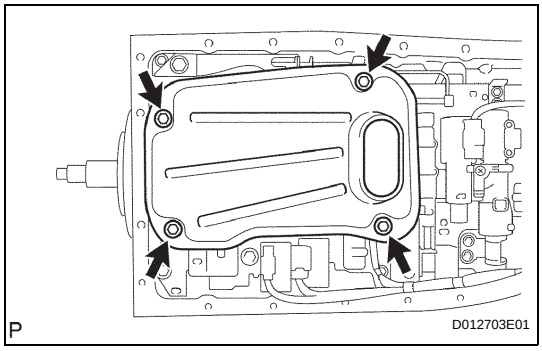

48. INSTALL VALVE BODY OIL STRAINER ASSEMBLY
(a) Coat a new O-ring with ATF, and install them onto the valve body oil strainer assembly.
(b) Install the oil strainer with the 4 bolts.
Torque: 10 N*m (100 kgf*cm, 7 ft.*lbf)

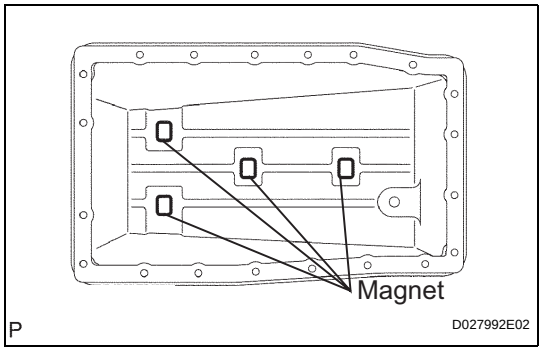

49. INSTALL TRANSMISSION OIL CLEANER MAGNET
(a) Install the 4 transmission oil cleaner magnets.

50. INSTALL AUTOMATIC TRANSMISSION OIL PAN SUB-ASSEMBLY
(a) Install a new gasket onto the oil pan.
(b) Install the 20 bolts.
Torque: 4.4 N*m (45 kgf*cm, 39 in.*lbf)
(c) Install the drain plug.
Torque: 28 N*m (285 kgf*cm, 21 ft.*lbf)

AT

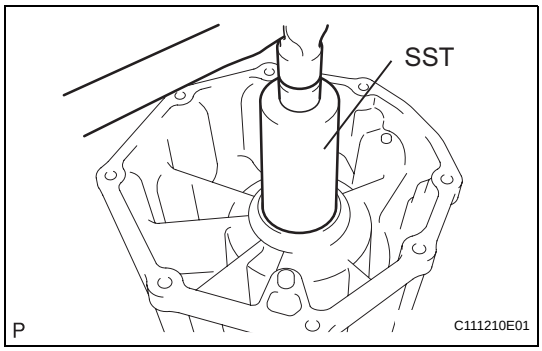

51. INSTALL TRANSMISSION CASE ADAPTOR OIL SEAL
(a) Using SST and a hammer, tap in a new oil seal.
SST 09226-10010

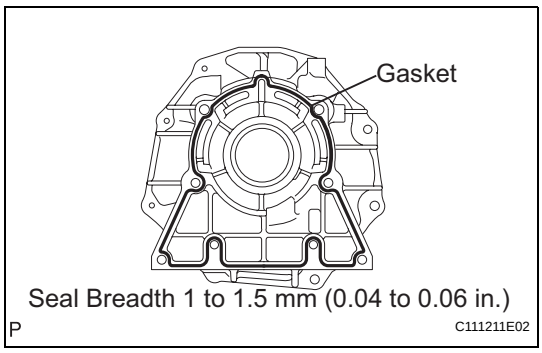

52. INSTALL TRANSMISSION CASE ADAPTER SUB-ASSEMBLY
(a) Apply seal packing or equivalent to the 8 bolts.
Seal packing:
Toyota Genuine Seal Packing 1281, Three Bond 1281 or Equivalent

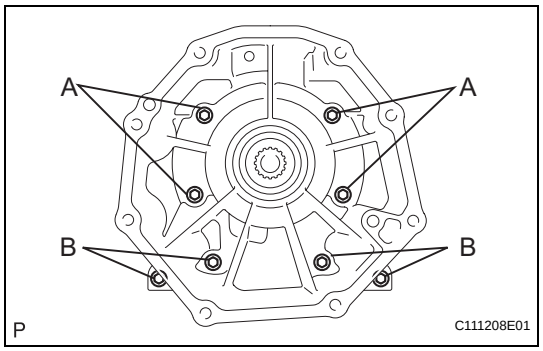

(b) Install the transmission case adapter sub-assembly with the 8 bolts.
Torque: 34 N*m (345 kgf*cm, 25 ft.*lbf)
HINT:
Each bolt length is indicated below.
Bolt length:
50 mm (1.969 in.) for bolt A
40 mm (1.575 in.) for bolt B

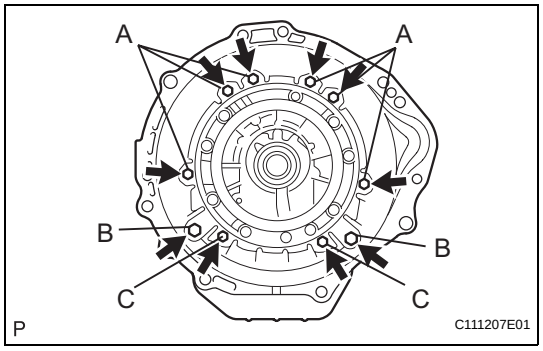

53. INSTALL AUTOMATIC TRANSMISSION HOUSING

(a) Clean the threads of the bolts and case with white gasoline.

(b) Install the transmission housing with the 10 bolts.
Torque: 34 N*m (345 kgf*cm, 25 ft.*lbf) for bolt A
57 N*m (581 kgf*cm, 42 ft.*lbf) for bolt B
34 N*m (345 kgf*cm, 25 ft.*lbf) for bolt C
HINT:
Each bolt length is indicated below.
Bolt length:
Bolt A: 14 mm
Bolt B: 17 mm
Bolt C: 14 mm

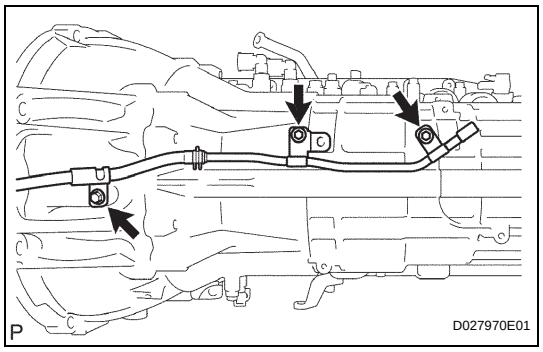

54. INSTALL AUTOMATIC TRANSAXLE BREATHER TUBE

(a) Install a new O-ring onto the breather tube.

(b) Install the breather tube with the 3 bolts.
Torque: 5.4 N*m (55 kgf*cm, 48 in.*lbf)

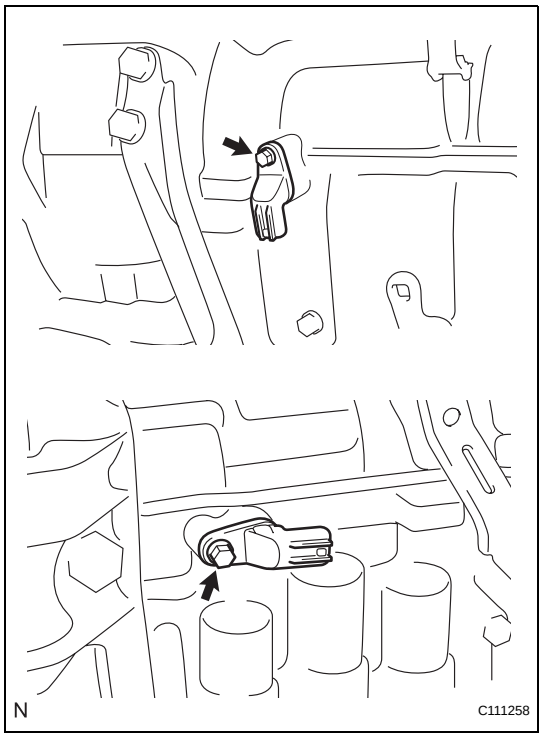

55. INSTALL TRANSMISSION REVOLUTION SENSOR

(a) Coat 2 new O-rings with AFT, and install one onto each transmission revolution sensor.
(b) Install the 2 transmission revolution sensors.
(c) Install the 2 bolts.
Torque: 5.4 N*m (55 kgf*cm, 48 in.*lbf)

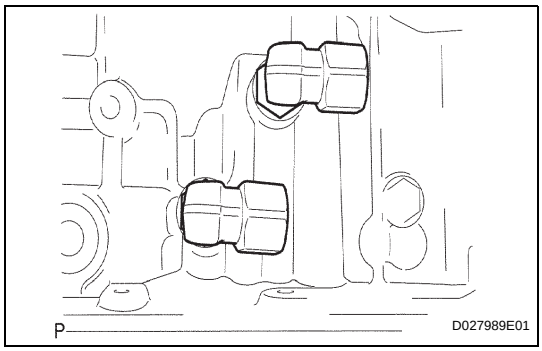

56. INSTALL OIL COOLER TUBE UNION

(a) Coat 2 new O-rings with ATF, and install one onto each oil cooler tube union.
(b) Install the 2 oil cooler tube unions.
Torque: 29 N*m (296 kgf*cm, 21 ft.*lbf)

AT

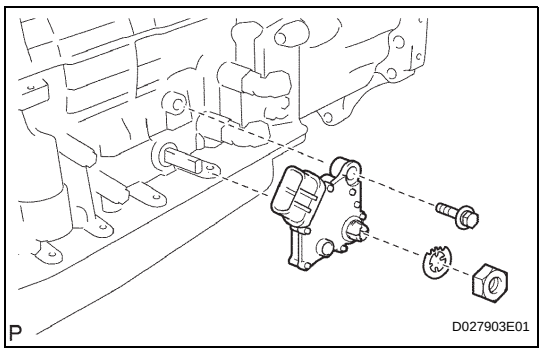

57. INSTALL PARK/NEUTRAL POSITION SWITCH ASSEMBLY

(a) Install the park/neutral position switch onto the manual valve lever shaft, and temporarily install the adjusting bolt.
(b) Install a new lock washer and tighten the nut.
Torque: 6.9 N*m (70 kgf*cm, 61 in.*lbf)

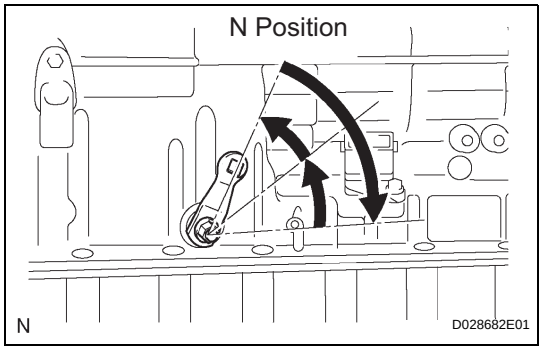

(c) Push the control shaft rearward as much as possible.
(d) Return the control shaft lever 2 notches to the N position.

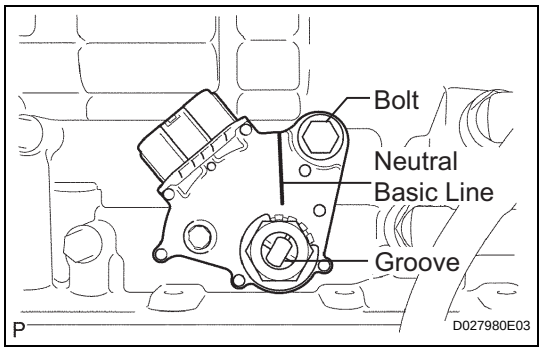

(e) Align the neutral basic line with the switch groove as shown in the illustration, and tighten the adjusting bolt.
Torque: 13 N*m (129 kgf*cm, 9.4 ft.*lbf)

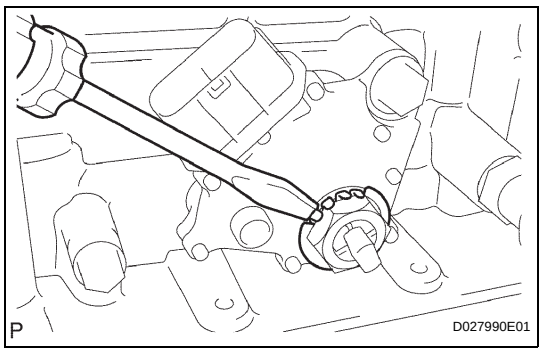

(f) Using a screwdriver, bend the tabs of the lock washer.
HINT:
Bend at least 2 of the lock washer tabs.

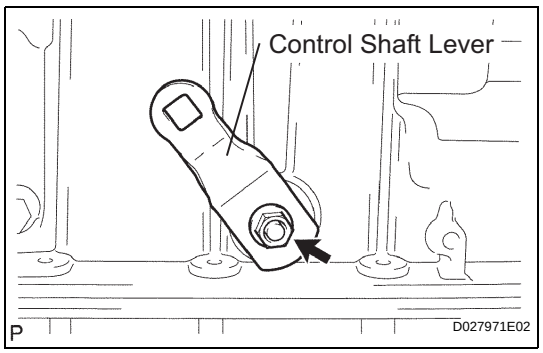

58. INSTALL TRANSMISSION CONTROL SHAFT LEVER LH

(a) Install the control shaft lever LH with the washer and nut.
Torque: 16 N*m (163 kgf*cm, 12 ft.*lbf)

AT

OIL PUMP

COMPONENTS

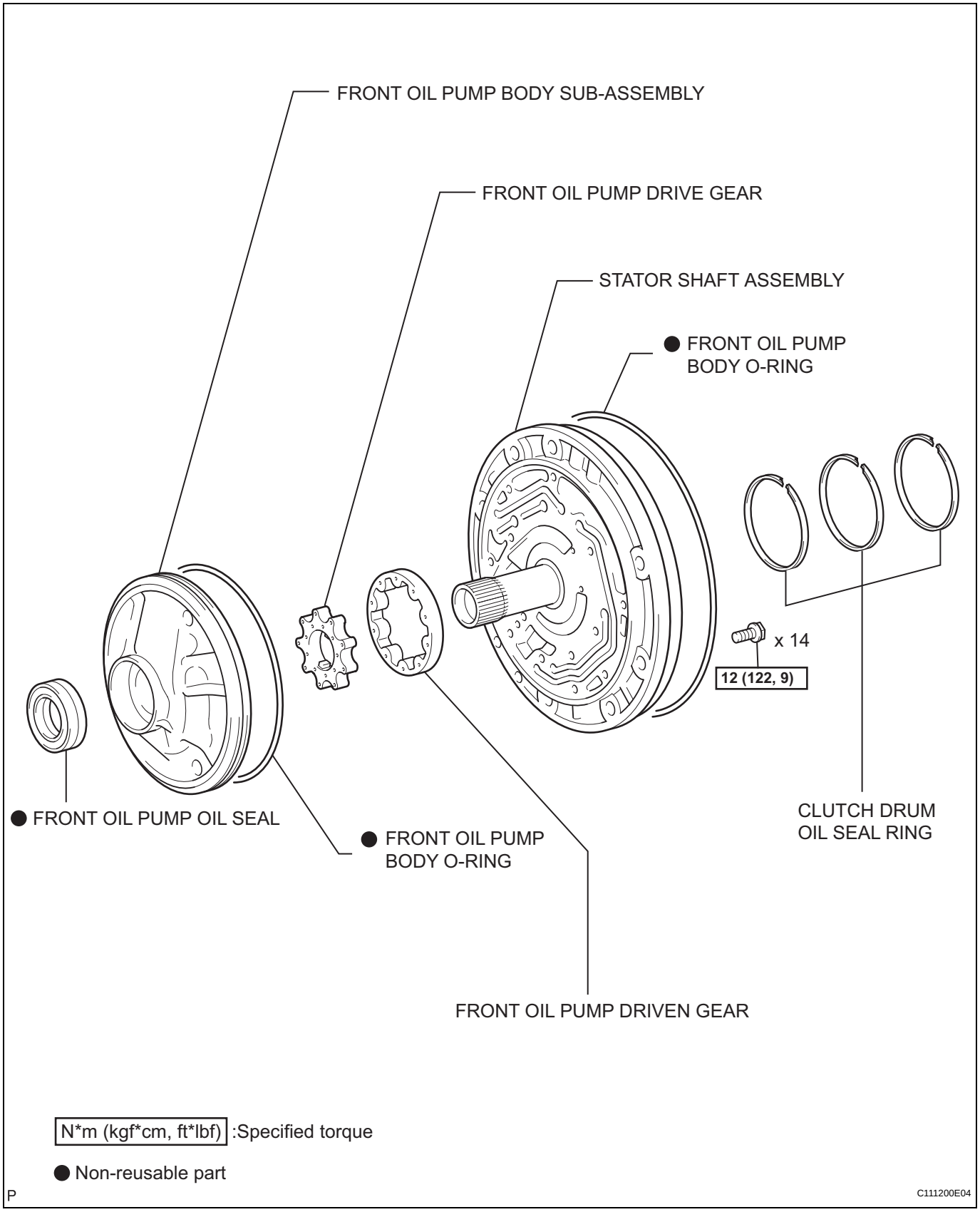

AT

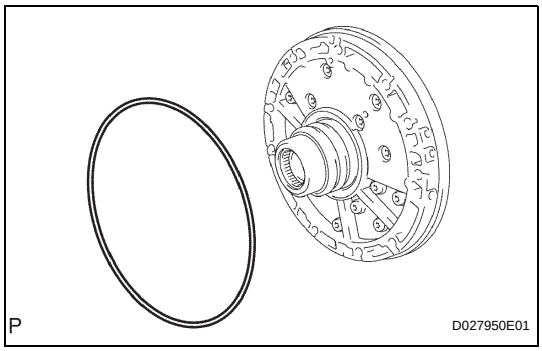

DISASSEMBLY

1. REMOVE FRONT OIL PUMP BODY O-RING

(a) Remove the O-ring from the oil pump assembly.

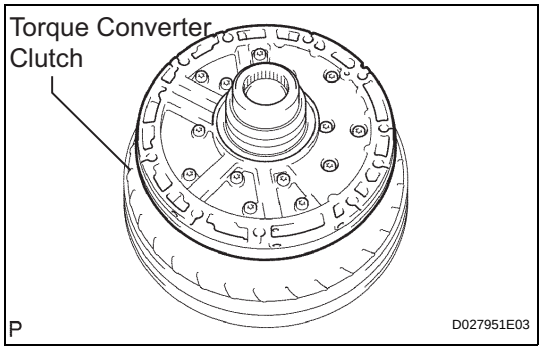

2. FIX OIL PUMP ASSEMBLY

(a) Place the oil pump body on the torque converter clutch.

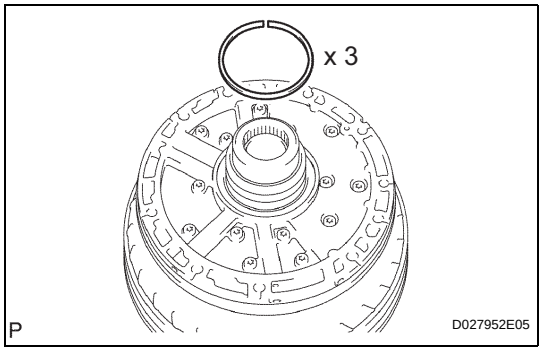

3. REMOVE CLUTCH DRUM OIL SEAL RING

(a) Remove the 3 oil seal rings.

AT

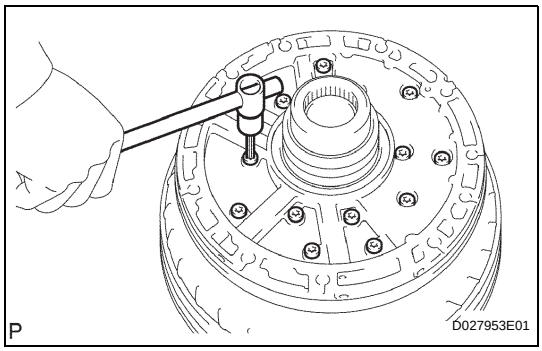

4. REMOVE STATOR SHAFT ASSEMBLY

(a) Remove the 14 bolts, and then remove the stator shaft from the oil pump body.

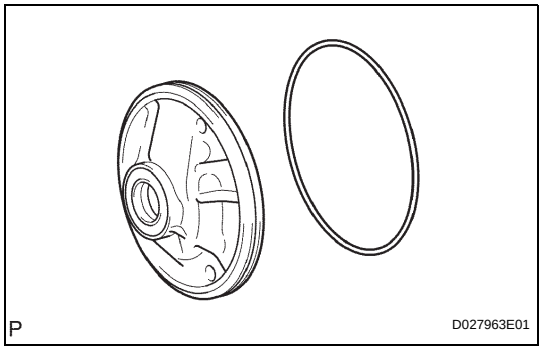

5. REMOVE FRONT OIL PUMP BODY O-RING

(a) Remove the O-ring from the oil pump body.

(b) Remove the oil pump body from the torque converter clutch.

6. INSPECT FRONT OIL PUMP BODY SUB-ASSEMBLY (See page AT-245)

7. INSPECT STATOR SHAFT ASSEMBLY (See page AT-245)

8. INSPECT CLEARANCE OF OIL PUMP ASSEMBLY

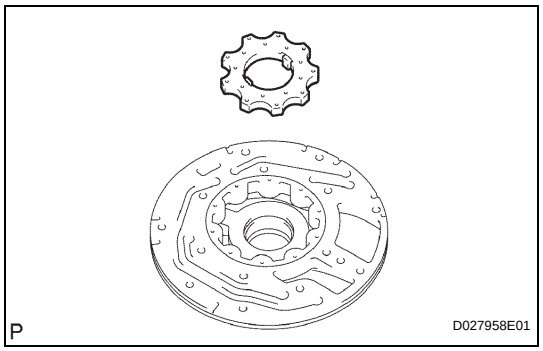

9. REMOVE FRONT OIL PUMP DRIVE GEAR

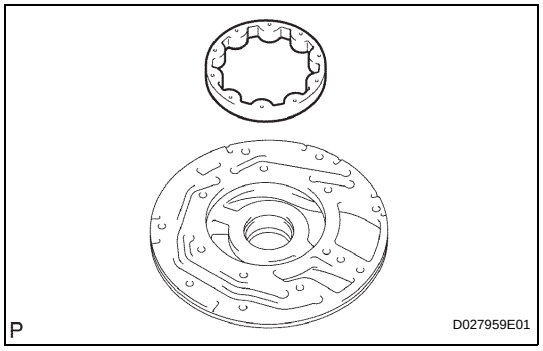

10. REMOVE FRONT OIL PUMP DRIVEN GEAR

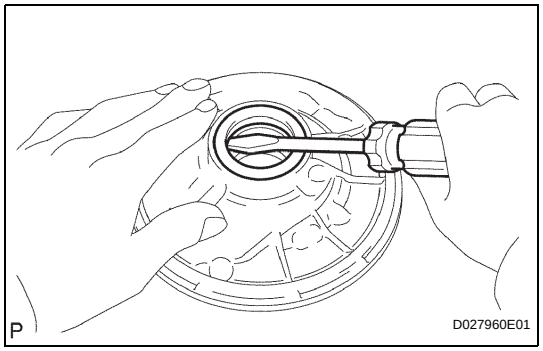

11. REMOVE FRONT OIL PUMP OIL SEAL

(a) Using a screwdriver, remove the oil seal.
NOTICE:
Be careful not to damage the bushing and oil pump body.

INSPECTION

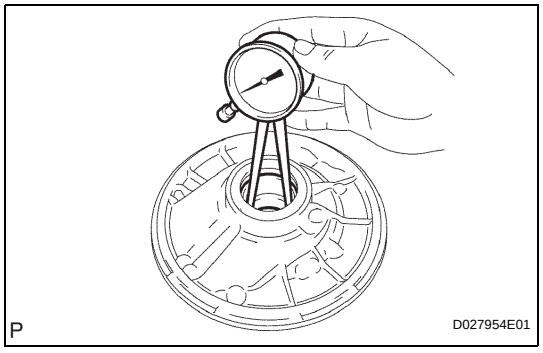

1. INSPECT FRONT OIL PUMP BODY SUB-ASSEMBLY

(a) Using a dial indicator, measure the inside diameter of the oil pump body bushing.
Maximum inside diameter:
38.188 mm (1.504 in.)
If the inside diameter is greater than the maximum, replace the oil pump body.

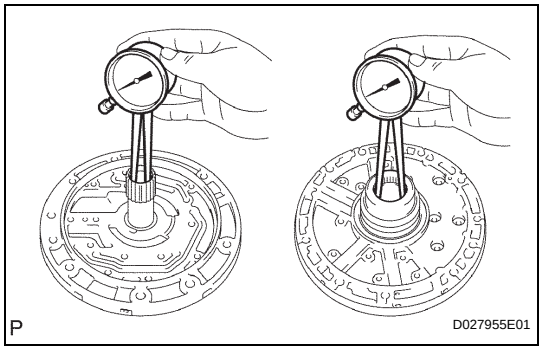

2. INSPECT STATOR SHAFT ASSEMBLY

(a) Using a dial indicator, measure the inside diameter of the stator shaft bushing.
Maximum inside diameter:
Front side:
21.577 mm (0.850 in.)
Rear side:
32.08 mm (1.263 in.)
If the inside diameter is grater than the maximum, replace the stator shaft.

AT

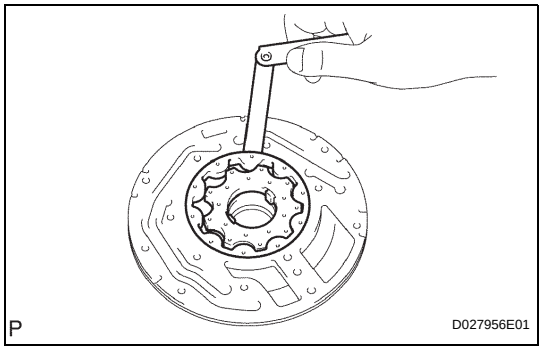

3. INSPECT CLEARANCE OF OIL PUMP ASSEMBLY

(a) Push the driven gear to one side of the body.

(b) Using a feeler gauge, measure the clearance.

Standard body clearance:
0.10 to 0.17 mm (0.0039 to 0.0067 in.)
Maximum body clearance:
0.17 mm (0.0067 in.)

If the body clearance is greater than the maximum, replace drive gear, the driven gear or pump body.

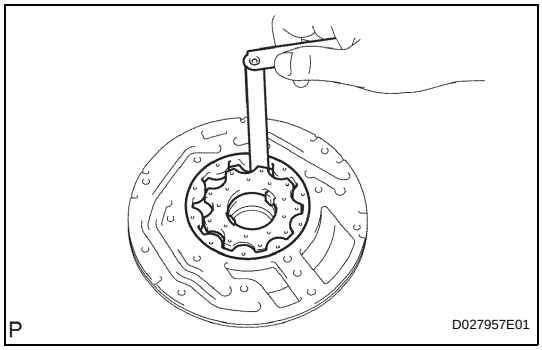

(c) Using a feeler gauge, measure the clearance between the driven gear teeth and drive gear teeth.

Standard tip clearance:
0.07 to 0.15 mm (0.0028 to 0.0059 in.)
Maximum tip clearance:
0.15 mm (0.0059 in.)

If the tip clearance is greater than the maximum, replace drive gear, the driven gear or pump body.

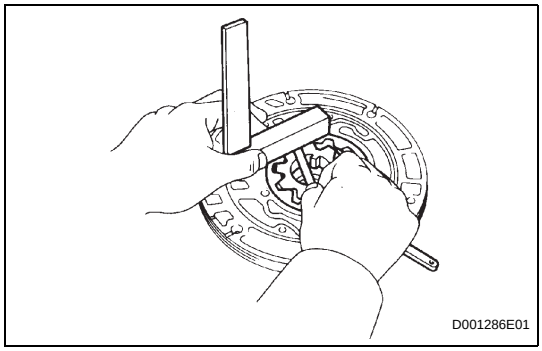

(d) Using a steel straight edge and feeler gauge, measure the side clearance of both gears.

Standard side clearance:
0.02 to 0.05 mm (0.0008 to 0.0020 in.)
Maximum side clearance:
0.05 mm (0.0020 in.)

(e) There are 5 different thicknesses for the drive and driven gears.

Drive and drive gears thickness

Mark	Thickness
0	10.740 to 10.749 mm (0.4228 to 0.4232 in.)
1	10.750 to 10.759 mm (0.4232 to 0.4236 in.)
2	10.760 to 10.769 mm (0.4236 to 0.4240 in.)
3	10.770 to 10.779 mm (0.4240 to 0.4244 in.)
4	10.780 to 10.789 mm (0.4244 to 0.4248 in.)

If the side clearance is greater than the maximum, replace drive gear, driven gear or pump body.

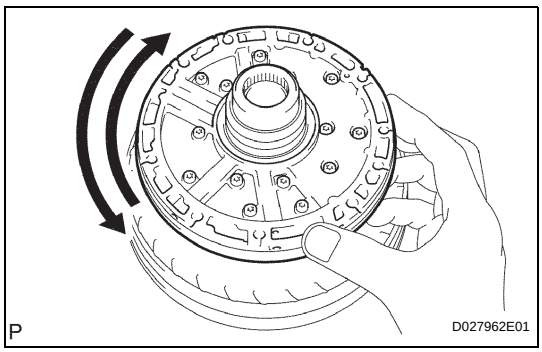

4. INSPECT FRONT OIL PUMP DRIVE GEAR ROTATION

(a) Make sure the drive gear rotates smoothly.

(b) Remove the oil pump assembly from the torque converter.

AT

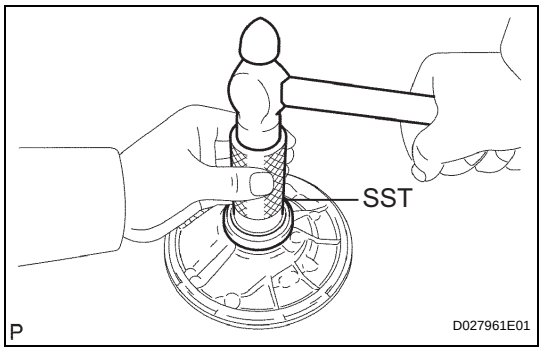

REASSEMBLY

1. INSTALL FRONT OIL PUMP OIL SEAL

(a) Using SST and a hammer, install a new oil seal.
SST 09350-30020 (09351-32140)
HINT:
The oil seal end should be flush with the outer edge of the pump body.

(b) Coat the oil seal lip with MP grease.

2. FIX FRONT OIL PUMP BODY SUB-ASSEMBLY

(a) Place the oil pump body on the torque converter clutch.

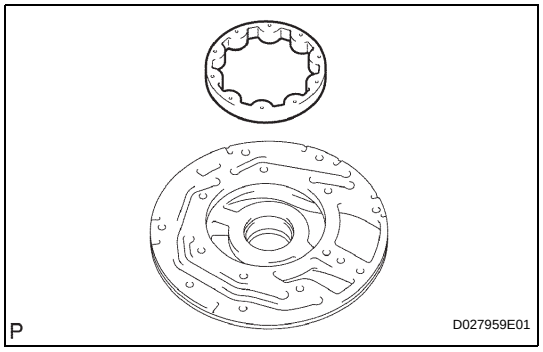

3. INSTALL FRONT OIL PUMP DRIVEN GEAR

(a) Coat the driven gear with ATF.

(b) Install the driven gear onto the oil pump body.

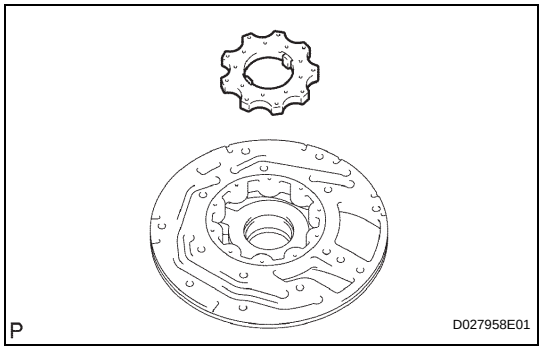

4. INSTALL FRONT OIL PUMP DRIVE GEAR

(a) Coat the drive gear with ATF.

(b) Install the drive gear onto the oil pump body.

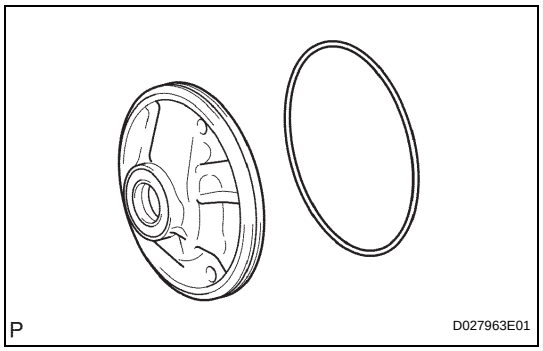

5. INSTALL FRONT OIL PUMP BODY O-RING

(a) Install a new O-ring onto the oil pump body.

AT

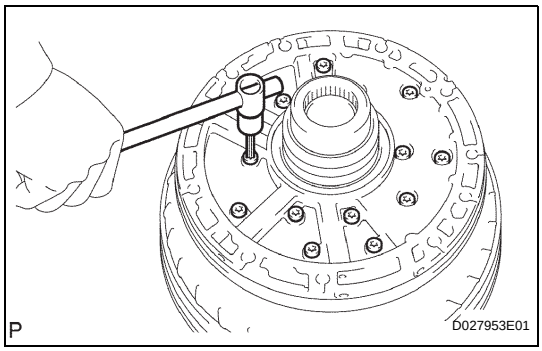

6. INSTALL STATOR SHAFT ASSEMBLY

(a) Align the bolt holes of the stator shaft and oil pump body and install the stator shaft.

(b) Install the 14 bolts.

Torque: 12 N*m (122 kgf*cm, 9 ft.*lbf)

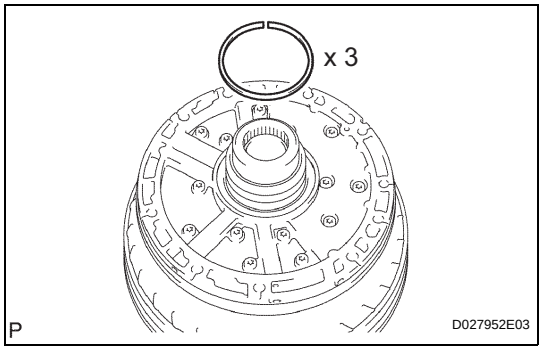

7. INSTALL CLUTCH DRUM OIL SEAL RING

(a) Coat the 3 oil seal rings with ATF.

(b) Put together the ends of the 3 oil seal rings together with the overlap distance 8 mm (0.314 in.) or less, and then install them onto the stator shaft groove.

NOTICE:

Do not over-widen the ring ends.

HINT:

After installing the oil seal rings, check that they rotate smoothly.

8. INSPECT OIL PUMP DRIVE GEAR ROTATION (See page AT-246)

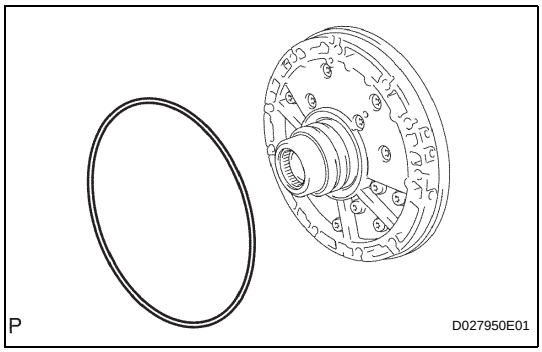

9. INSTALL FRONT OIL PUMP BODY O-RING

(a) Install a new O-ring onto the oil pump assembly.

CLUTCH DRUM AND INPUT SHAFT ASSEMBLY

COMPONENTS

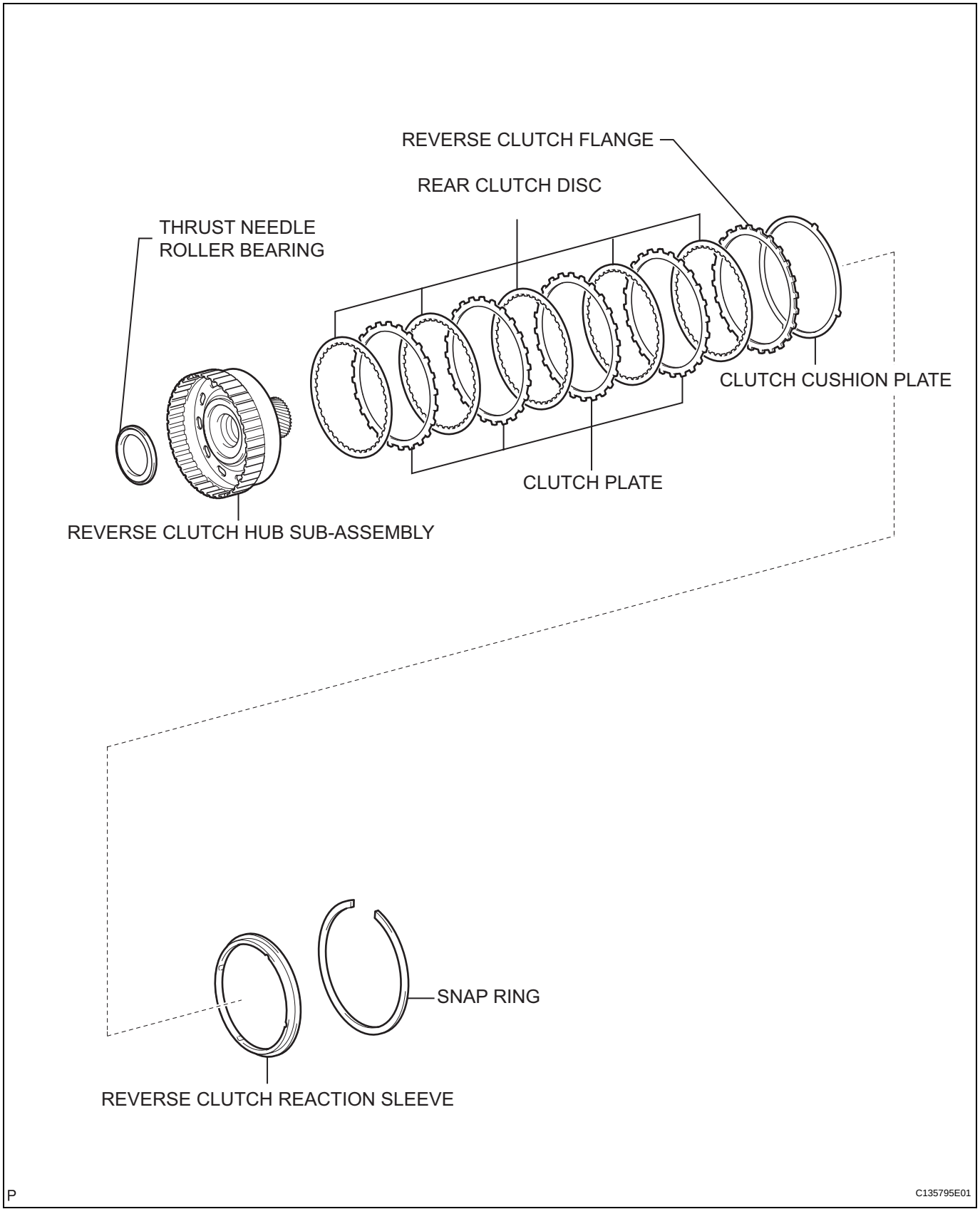

AT

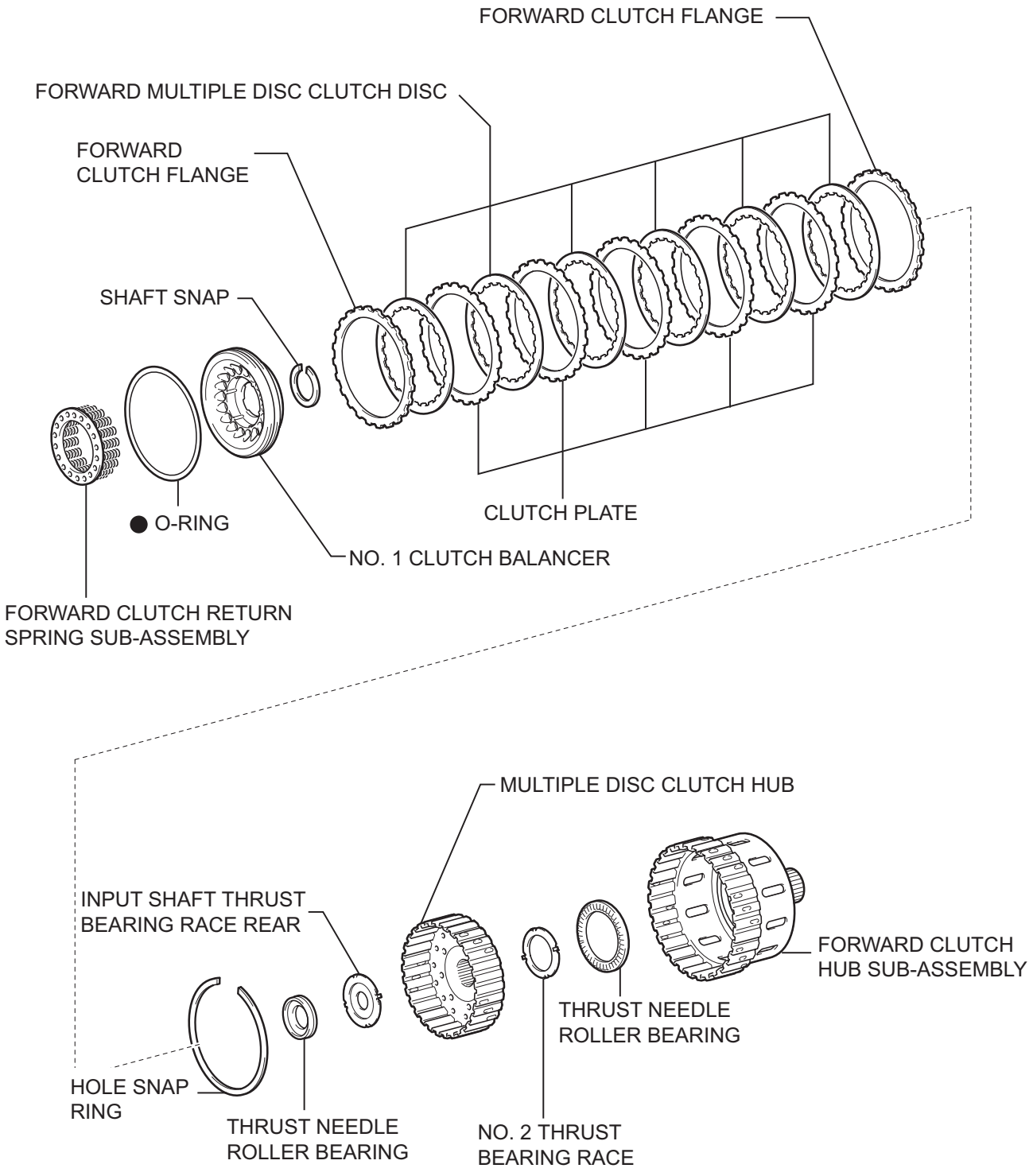

AT

● Non-reusable part

P

C111203E03

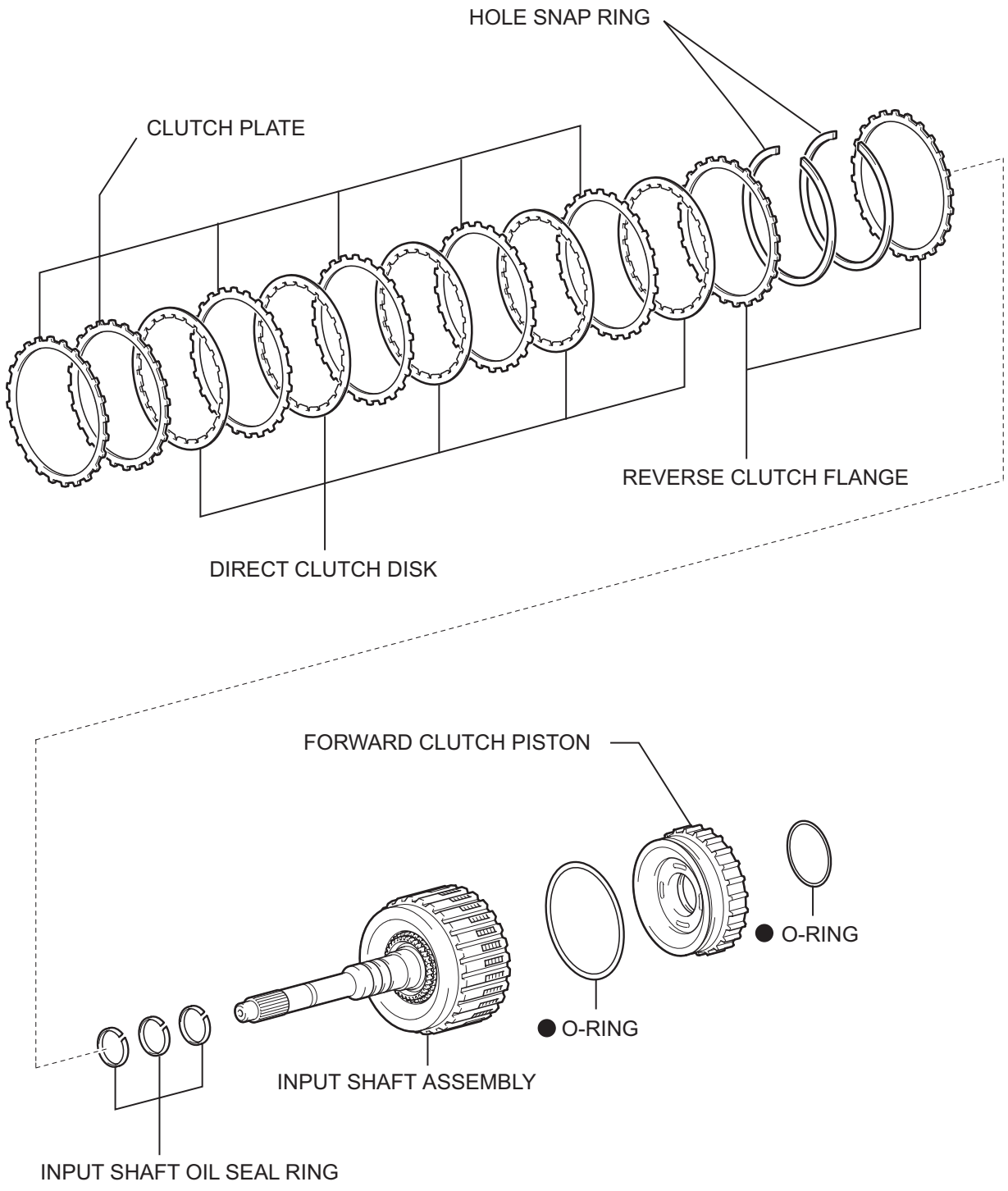

● Non-reusable part

P

C111202E03

AT

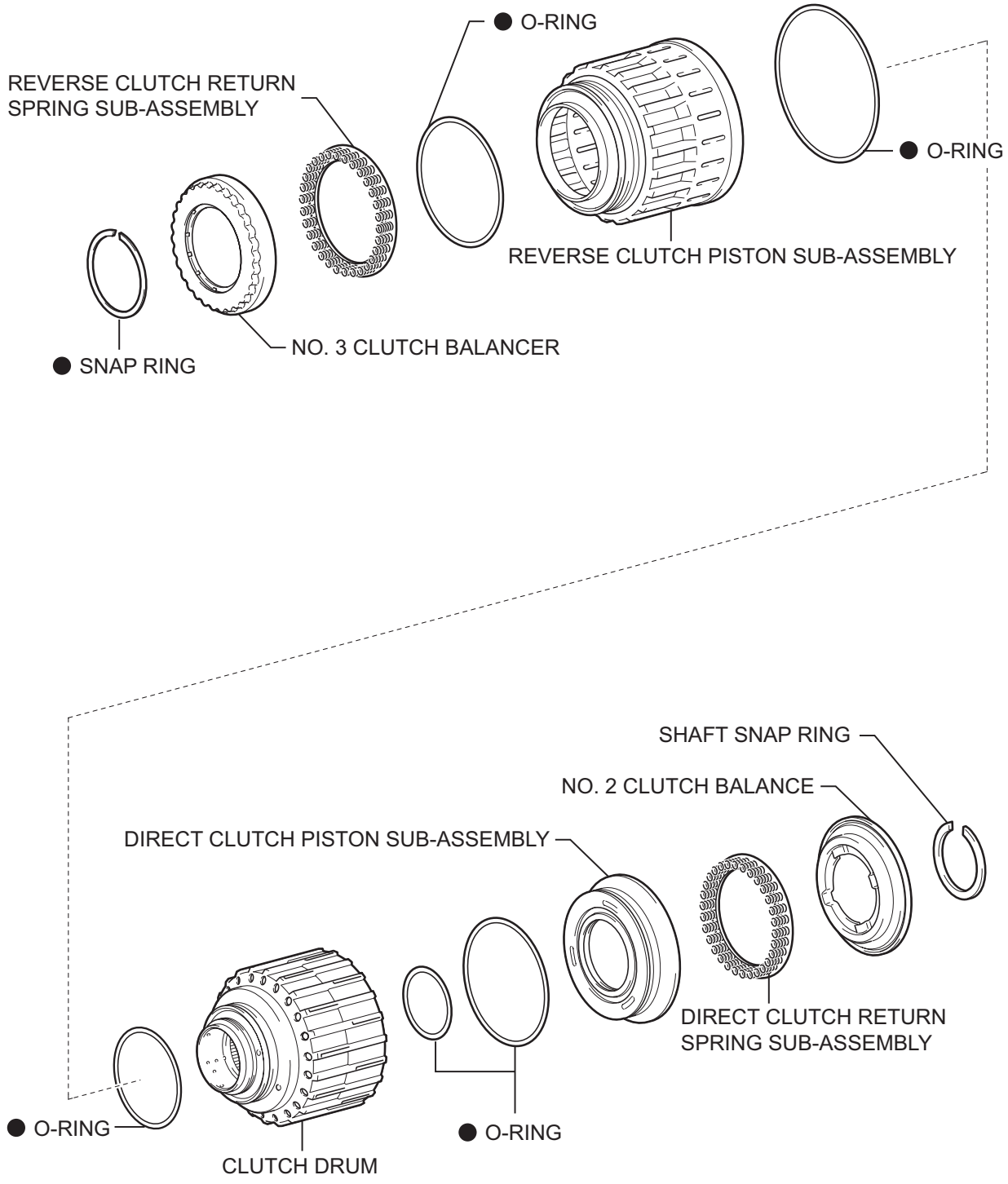

AT

● Non-reusable part

P

C129564E01

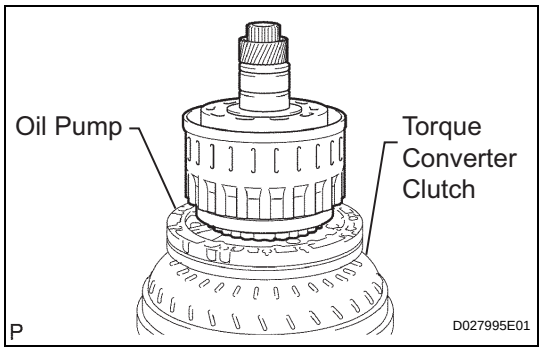

DISASSEMBLY

1. FIX CLUTCH DRUM AND INPUT SHAFT ASSEMBLY

(a) Place the oil pump onto the torque converter clutch, and then place the clutch drum and input shaft assembly onto the oil pump.

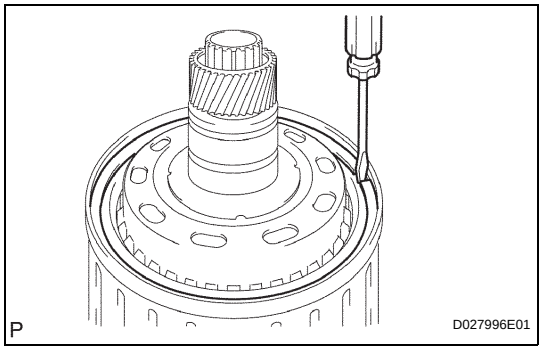

2. REMOVE REVERSE CLUTCH HUB SUB-ASSEMBLY

(a) Using a screwdriver, remove the snap ring from the clutch drum and input shaft assembly.

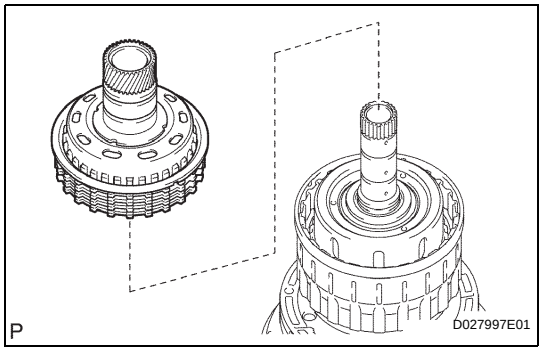

(b) Remove the reverse clutch hub sub-assembly, reverse clutch reaction sleeve, clutch cushion, plate reverse clutch flange, 5 reverse clutch discs and 4 clutch plates from the clutch drum assembly.

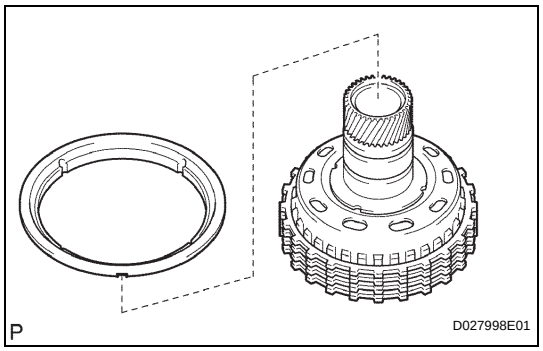

3. REMOVE REVERSE CLUTCH REACTION SLEEVE

(a) Remove the reverse clutch reaction sleeve from the reverse clutch hub sub-assembly.

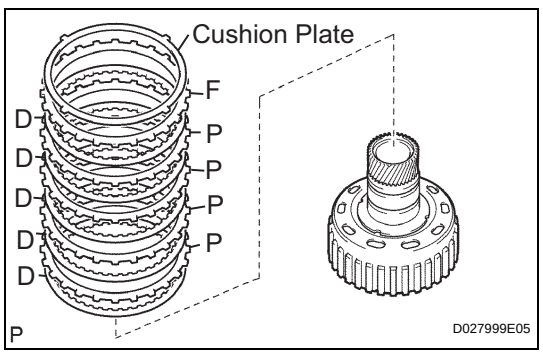

4. REMOVE REAR CLUTCH DISC

(a) Remove the clutch cushion plate, reverse clutch flange, 4 plates and 5 discs from the reverse clutch hub.

5. INSPECT REAR CLUTCH DISC (See page AT-259)

6. INSPECT REVERSE CLUTCH HUB SUB-ASSEMBLY (See page AT-260)

AT

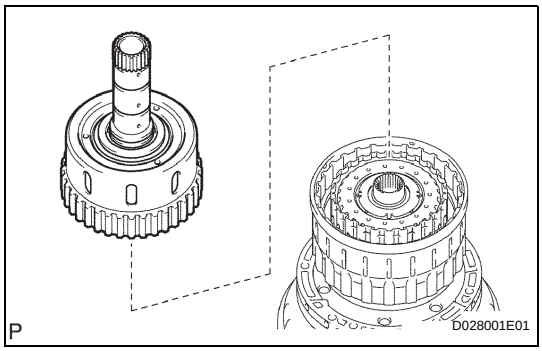

7. REMOVE FORWARD CLUTCH HUB SUB-ASSEMBLY

(a) Remove the forward clutch hub sub-assembly from the clutch drum assembly.

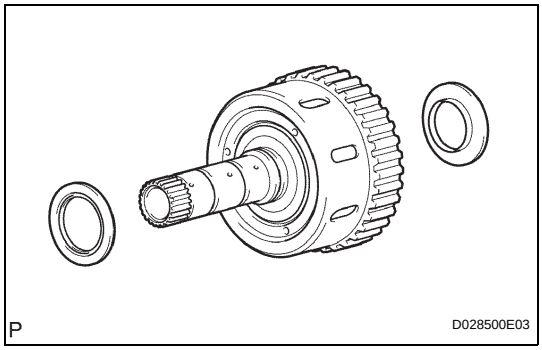

(b) Remove the 2 thrust needle roller bearings from the forward clutch hub sub-assembly.

8. INSPECT FORWARD CLUTCH HUB SUB-ASSEMBLY (See page AT-260)

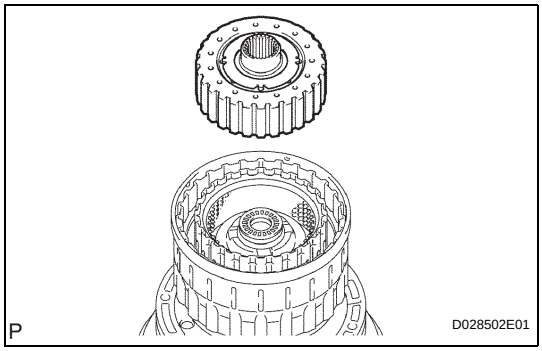

9. REMOVE MULTIPLE DISC CLUTCH HUB

(a) Remove the multiple disc clutch hub from the clutch drum assembly.

AT

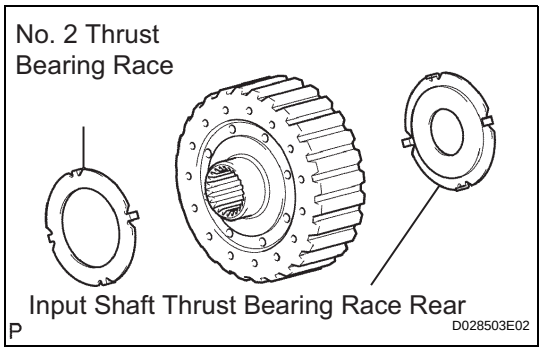

(b) Remove the No. 2 thrust bearing race and input shaft thrust bearing race rear from the multiple disc clutch hub.

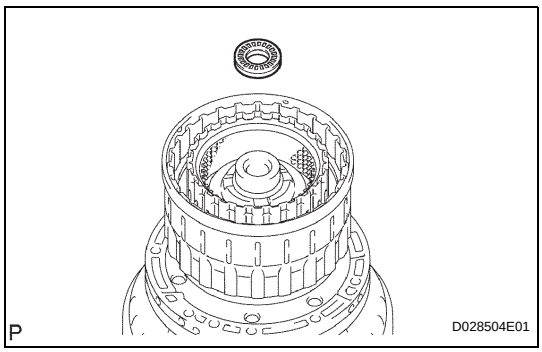

10. REMOVE INPUT SHAFT ASSEMBLY

(a) Remove the thrust needle roller bearing from the clutch drum assembly.

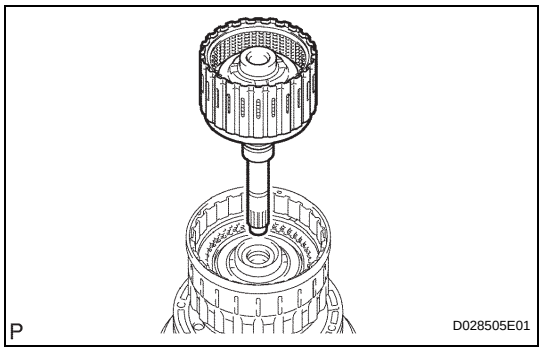

(b) Remove the input shaft assembly from the clutch drum assembly.

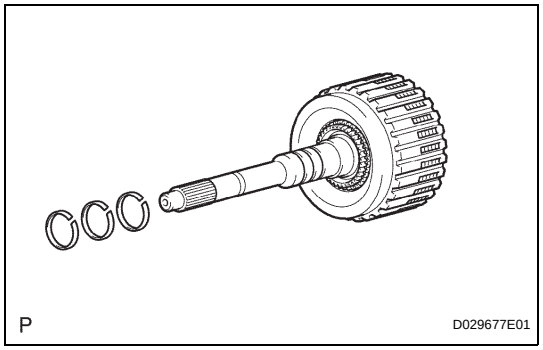

11. REMOVE INPUT SHAFT OIL SEAL RING

(a) Remove the 3 oil seal rings from the input shaft assembly.

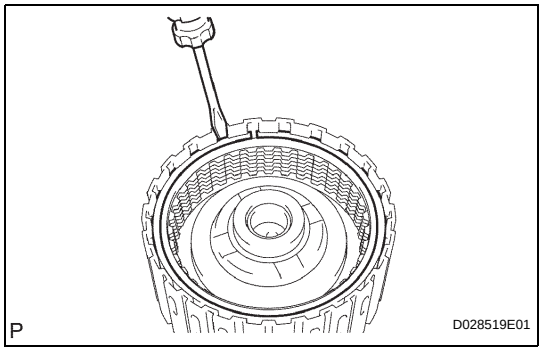

12. REMOVE FORWARD MULTIPLE DISC CLUTCH DISC

(a) Using a screwdriver, remove the hole snap ring.

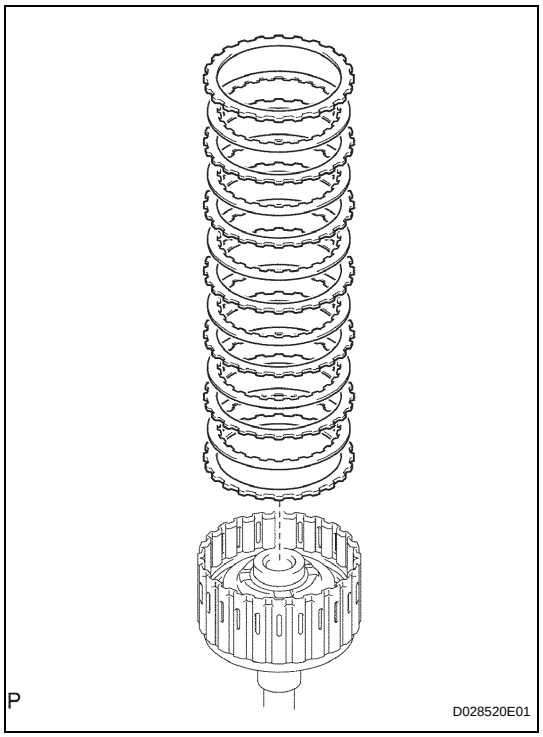

(b) Remove the 2 flanges, 6 discs and 5 plates from the input shaft assembly.

13. INSPECT FORWARD MULTIPLE DISC CLUTCH DISC (See page AT-260)

AT

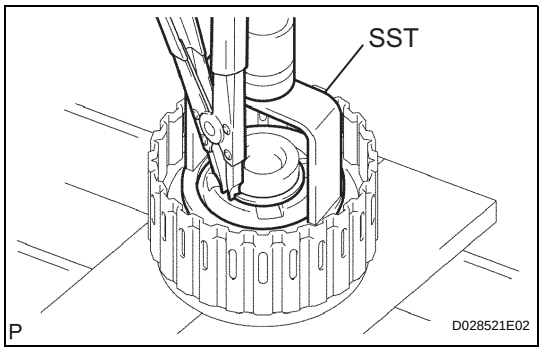

14. REMOVE NO. 1 CLUTCH BALANCER

(a) Place SST on the No. 1 clutch balancer, and compress the return spring with a press.
SST 09350-30020 (09350-07040, 09350-07070)

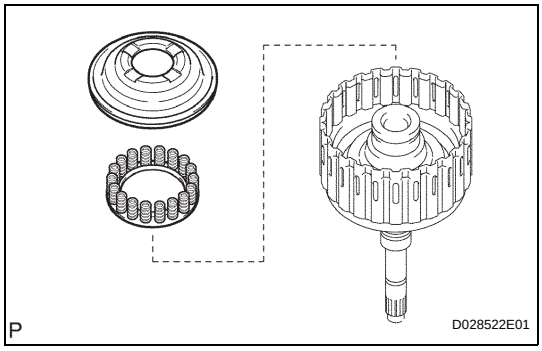

(b) Remove the No. 1 clutch balancer and forward clutch return spring from the input shaft assembly.

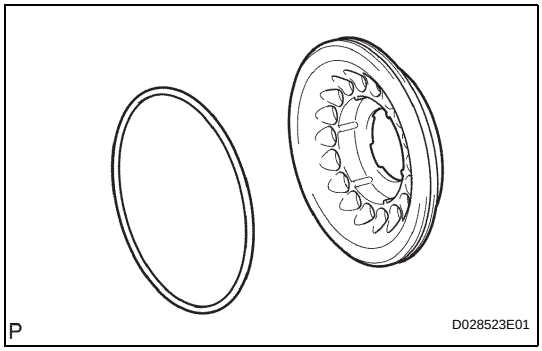

(c) Remove the O-ring from the No. 1 clutch balancer.

15. INSPECT FORWARD CLUTCH RETURN SPRING SUB-ASSEMBLY (See page AT-260)

AT

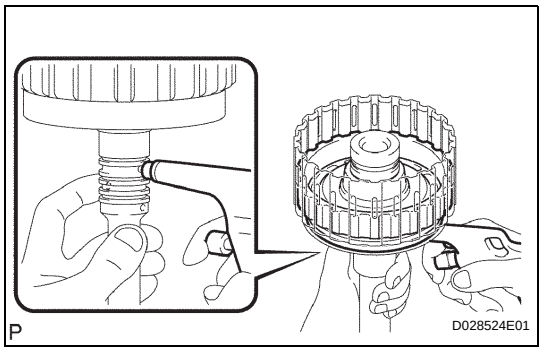

16. REMOVE FORWARD CLUTCH PISTON

(a) Holding the forward clutch piston by hand, apply compressed air (392 kPa, 4.0 kgf/cm^2, 57 psi) to the input shaft to remove the forward clutch piston.

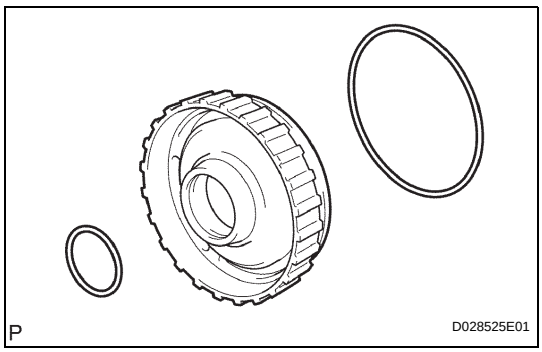

(b) Remove the 2 O-rings from the forward clutch piston.

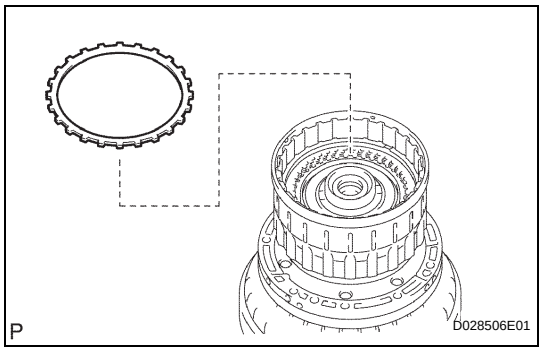

17. REMOVE REVERSE CLUTCH FLANGE

(a) Remove the reverse clutch flange from the clutch drum assembly.

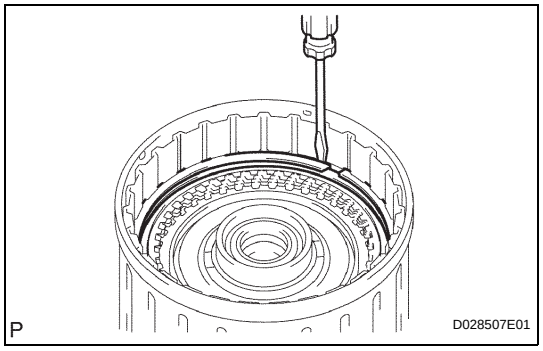

18. REMOVE DIRECT CLUTCH DISK

(a) Using a screwdriver, remove the 2 hole snap rings from the clutch drum assembly.

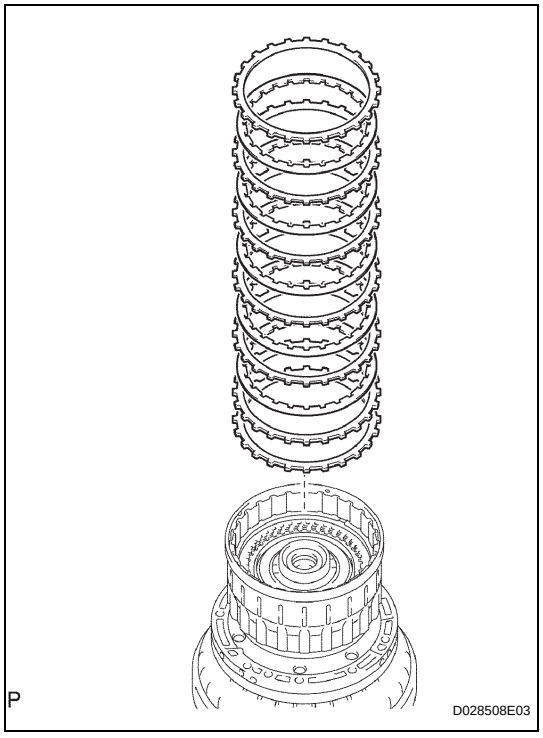

(b) Remove the reverse clutch flange, 6 plates and 5 discs from the clutch drum assembly.

19. INSPECT DIRECT CLUTCH DISK

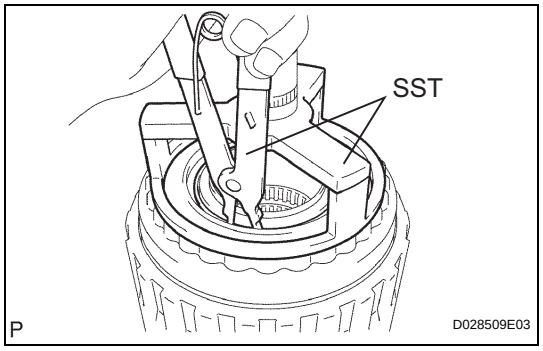

20. REMOVE NO. 3 CLUTCH BALANCER

(a) Place SST on the No. 3 clutch balancer, and compress the return spring with a press.
SST 09387-00070, 09350-30020 (09350-07070)

(b) Remove the snap ring.

AT

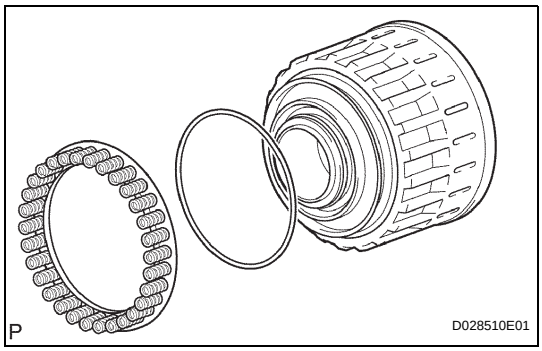

21. REMOVE REVERSE CLUTCH RETURN SPRING SUB-ASSEMBLY

(a) Remove the reverse clutch return spring and O-ring from the reverse clutch piston.

22. INSPECT REVERSE CLUTCH RETURN SPRING SUB-ASSEMBLY (See page AT-261)

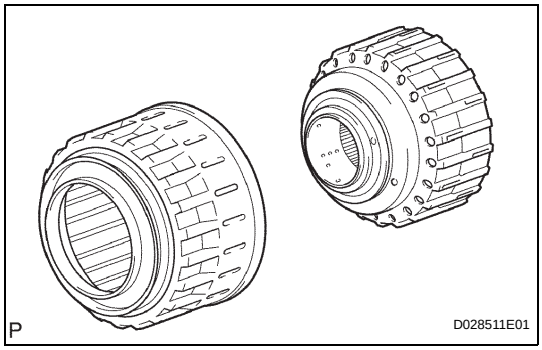

23. REMOVE REVERSE CLUTCH PISTON SUB-ASSEMBLY

(a) Remove the reverse clutch piston, sub-assembly from the clutch drum sub-assembly.

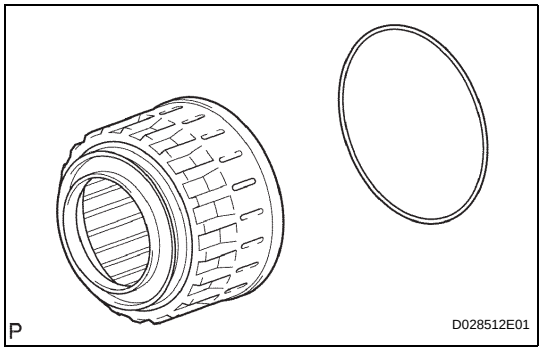

(b) Remove the O-ring from the reverse clutch piston sub-assembly.

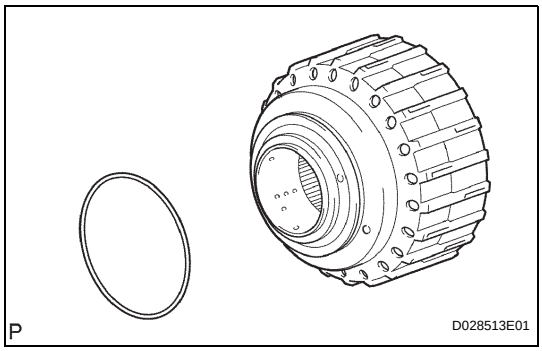

(c) Remove the O-ring from the clutch drum sub-assembly.

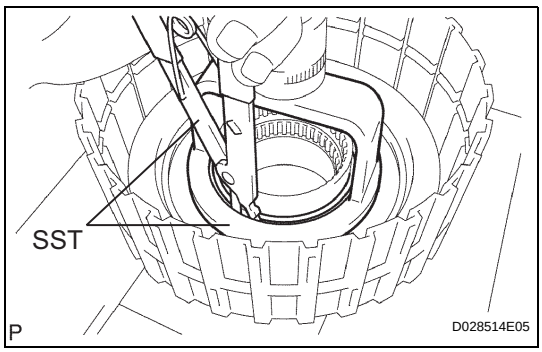

24. REMOVE DIRECT CLUTCH PISTON SUB-ASSEMBLY

(a) Place SST on the direct clutch piston, and compress the return spring with a press.
SST 09320-89010, 09350-30020 (09350-07070)

(b) Remove the snap ring.

AT

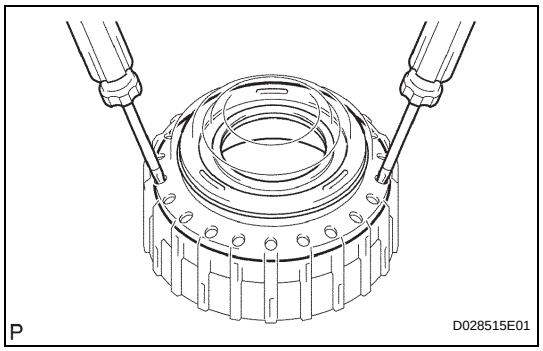

(c) Using 2 screwdrivers, remove the direct clutch piston sub-assembly from the clutch drum.

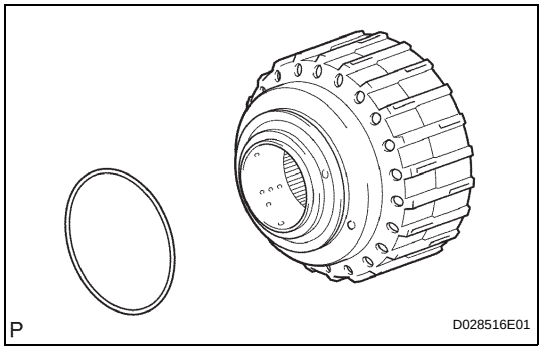

(d) Remove the O-ring from the clutch drum.

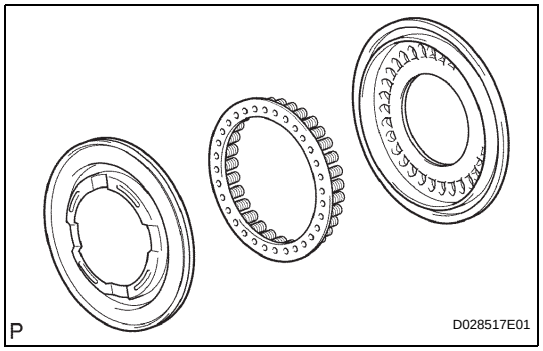

(e) Remove the No. 2 clutch balancer and direct clutch return spring sub-assembly from the direct clutch piston sub-assembly.

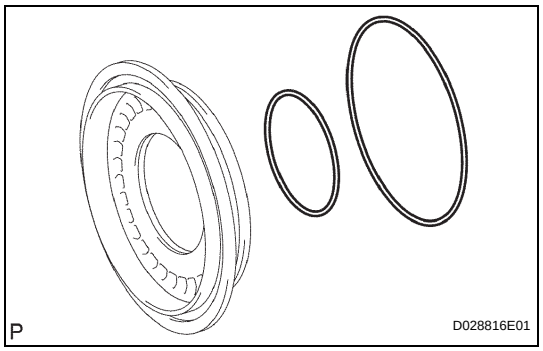

(f) Remove the 2 O-rings from the direct clutch piston sub-assembly.

25. INSPECT DIRECT CLUTCH RETURN SPRING SUB-ASSEMBLY (See page AT-261)

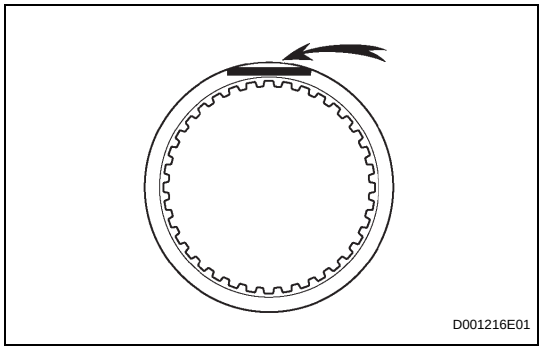

INSPECTION

1. INSPECT REAR CLUTCH DISC

(a) Replace all discs if one of the following problems is present: 1) a disc, plate or flange is worn or burnt, 2) the lining of a disc is peeled off or discolored, or 3) grooves or printed numbers have even slight damage.

NOTICE:

Before assembling new discs, soak them in ATF for at least 15 minutes.

AT

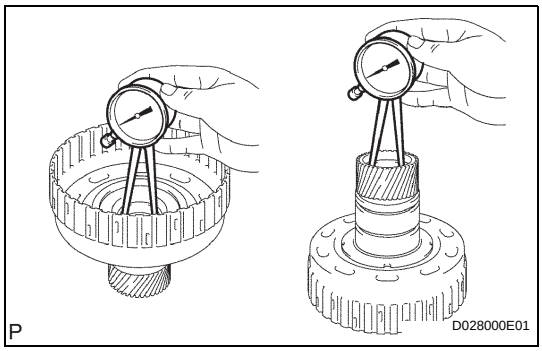

2. INSPECT REVERSE CLUTCH HUB SUB-ASSEMBLY

(a) Using a dial indicator, measure the inside diameter of the reverse clutch hub bushing.

Standard drum bushing:
35.812 to 35.837 mm (1.4099 to 1.4109 in.)
Maximum drum bushing:
35.887 mm (1.4129 in.)

If the inside diameter is greater than the maximum, replace the reverse clutch hub.

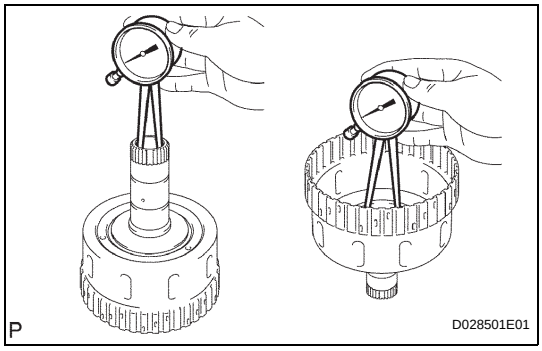

3. INSPECT FORWARD CLUTCH HUB SUB-ASSEMBLY

(a) Using a dial indicator, measure the inside diameter of the forward clutch hub bushing.

Standard drum bushing:
26.037 to 26. 062 mm (1.0251 to 1.0261 in.)
Maximum drum bushing:
26.112 mm (1.028 in.)

If the inside diameter is greater than the maximum, replace the forward clutch hub.

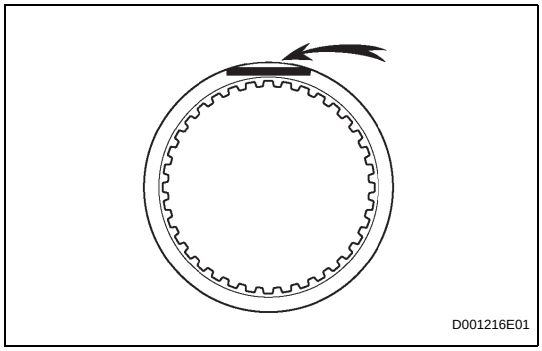

4. INSPECT FORWARD MULTIPLE DISC CLUTCH DISC

(a) Replace all discs if one of the following problems is present: 1) a disc, plate or flange is worn or burnt, 2) the lining of a disc is peeled off or discolored, or 3) grooves or printed numbers have even slight damage.

NOTICE:
Before assembling new discs, soak them in ATF for at least 15 minutes.

AT

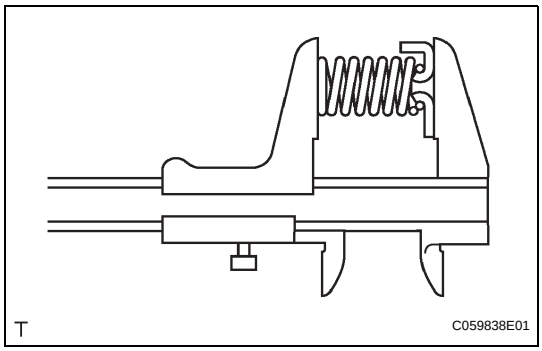

5. INSPECT FORWARD CLUTCH RETURN SPRING SUB-ASSEMBLY

(a) Using vernier calipers, measure the free length of the spring together with the spring seat.

Standard free length:
26.74 mm (1.053 in.)

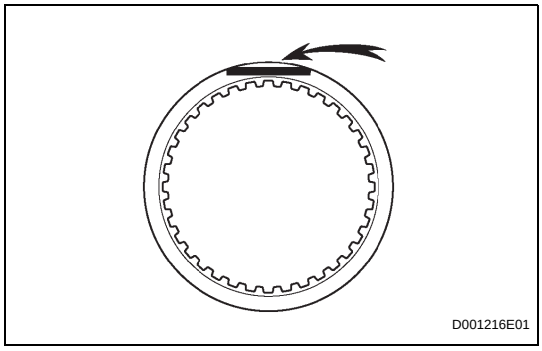

6. INSPECT DIRECT CLUTCH DISK

(a) Replace all discs if one of the following problems is present: 1) a disc, plate or flange is worn or burnt, 2) the lining of a disc is peeled off or discolored, or 3) grooves or printed numbers have even slight damage.

NOTICE:
Before assembling new discs, soak them in ATF for at least 15 minutes.

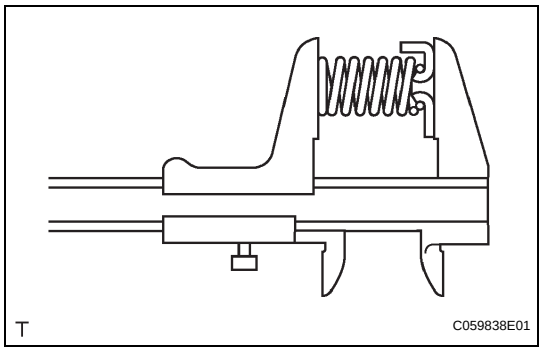

7. INSPECT REVERSE CLUTCH RETURN SPRING SUB-ASSEMBLY

(a) Using vernier calipers, measure the free length of the spring together with the spring seat.

Standard free length:

21.04 mm (0.828 in.)

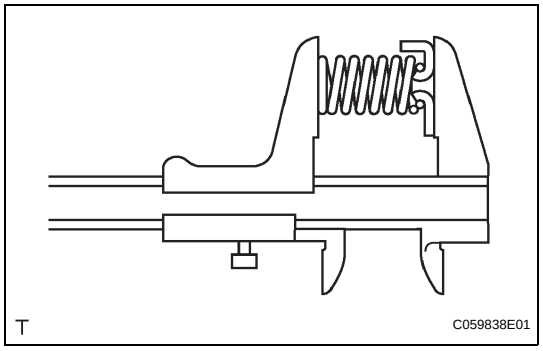

8. INSPECT DIRECT CLUTCH RETURN SPRING SUB-ASSEMBLY

(a) Using a vernier calipers, measure the free length of the spring together with the spring seat.

Standard free length:

19.51 mm (0.768 in.)

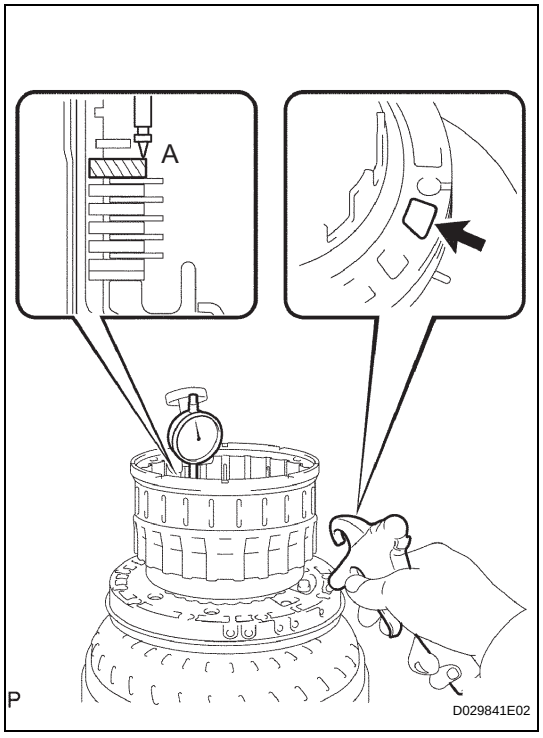

9. INSPECT PACK CLEARANCE OF DIRECT CLUTCH

(a) Using a dial gauge, measure the moving distance (distance A) of the clutch flange at both ends across a diameter while blowing air from the oil hole as shown in the illustration, and calculate the average.

Pack clearance:

0.5 to 0.8 mm (0.020 to 0.032 in.)

NOTICE:

Install a selective flange (3.4 mm (0.134 in.)) when measuring the moving distance (shaded area in the illustration).

HINT:

Flange moving distance A = 0.26 to 1.14 mm (0.010 to 0.045 in.)

Pack clearance = Flange moving distance A - 0.05 mm (0.002 in.)

(b) If the pack clearance is outside the standard, select and install a clutch flange that makes the pack clearance within the standard.

Flange thickness

No.	Thickness	No.	Thickness
0	3.0 mm (0.118 in.)	5	3.5 mm (0.138 in.)
1	3.1 mm (0.122 in.)	6	3.6 mm (0.142 in.)
2	3.2 mm (0.126 in.)	7	3.7 mm (0.146 in.)
3	3.3 mm (0.130 in.)	8	3.8 mm (0.150 in.)
4	3.4 mm (0.134 in.)	-	-

10. INSPECT PACK CLEARANCE OF REVERSE CLUTCH

(a) Using a dial gauge, measure the reverse clutch piston stroke (distance A) and the moving distance (distance B) of the reverse flange at the both ends across a diameter while blowing air (392 kPa, 4 kgf/cm^2, 57 psi) from the oil hole as shown in the illustration, and calculate the average.

Pack clearance:

0.5 to 0.8 mm (0.020 to 0.032 in.)

NOTICE:

Install a selective flange (3.3 mm (0.130 in.)) when measuring the moving distance (shaded area in the illustration).

HINT:

Piston stroke A = 1.05 to 2.15 mm (0.041 to 0.085 in.)

Flange moving distance B = 0.72 to 1.08 mm (0.029 to 0.043 in.)

Pack clearance = Piston stroke A - Flange moving distance B - 0.06 mm (0.002 in.)

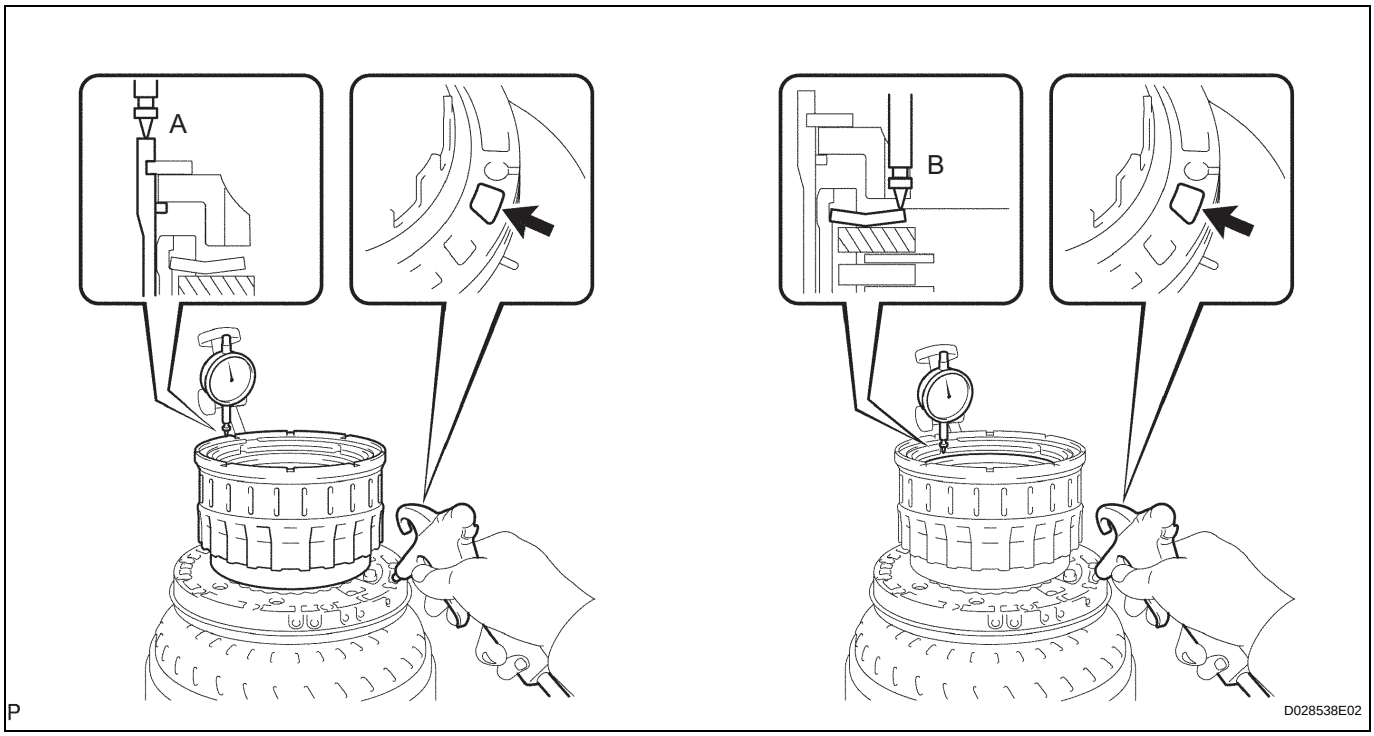

(b) If the pack clearance is outside the standard, select and install a clutch flange that makes the pack clearance within the standard.

Flange thickness

No.	Thickness	No.	Thickness
0	2.8 mm (0.110 in.)	6	3.4 mm (0.134 in.)
1	2.9 mm (0.114 in.)	7	3.5 mm (0.138 in.)
2	3.0 mm (0.118 in.)	8	3.6 mm (0.142 in.)
3	3.1 mm (0.122 in.)	9	3.7 mm (0.146 in.)
4	3.2 mm (0.126 in.)	A	3.8 mm (0.150 in.)
5	3.3 mm (0.130 in.)		-

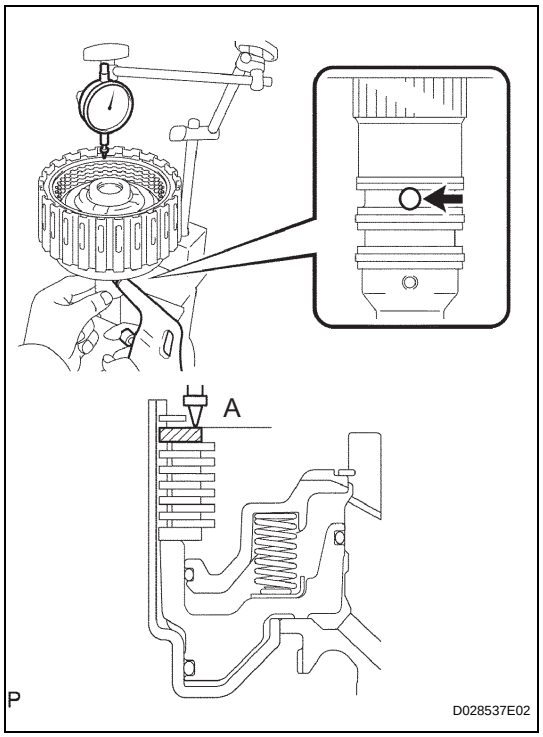

11. INSPECT PACK CLEARANCE OF FORWARD CLUTCH

(a) Using a dial gauge, measure the moving distance (distance A) of the clutch flange at boths end across a diameter while blowing air from the oil hole as shown in the illustration, and calculate the average.
Pack clearance:
0.6 to 0.9 mm (0.024 to 0.035 in.)
NOTICE:
Install a selective flange (3.4 mm (0.134 in.)) when measuring the moving distance (shaded area in the illustration).
HINT:
Flange moving distance A = 0.26 to 1.36 mm (0.010 to 0.054 in.)
Pack clearance = Flange moving distance A - 0.01 mm (0.0003 in.)

(b) If the pack clearance is outside the standard, select and install a clutch flange that makes the pack clearance within the standard.
Flange thickness

No.	Thickness	No.	Thickness
0	3.0 mm (0.118 in.)	6	3.6 mm (0.142 in.)
1	3.1 mm (0.122 in.)	7	3.7 mm (0.146 in.)
2	3.2 mm (0.126 in.)	8	3.8 mm (0.150 in.)
3	3.3 mm (0.130 in.)	9	3.9 mm (0.154 in.)
4	3.4 mm (0.134 in.)	A	4.0 mm (0.158 in.)
5	3.5 mm (0.138 in.)		-

REASSEMBLY

1. INSTALL DIRECT CLUTCH PISTON SUB-ASSEMBLY

(a) Coat 2 new O-rings with ATF, and install them onto the direct clutch piston.

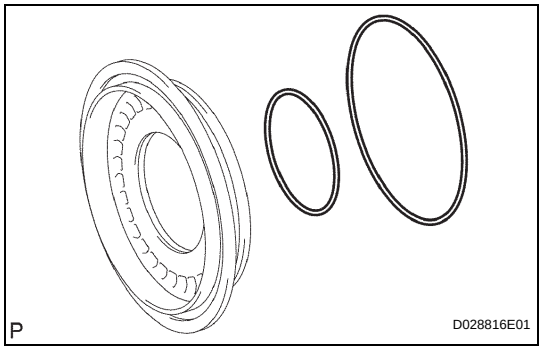

(b) Install the No. 2 clutch balancer and direct clutch return spring onto the direct clutch piston sub-assembly.

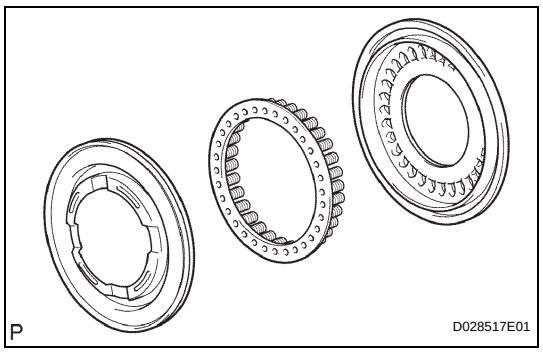

AT

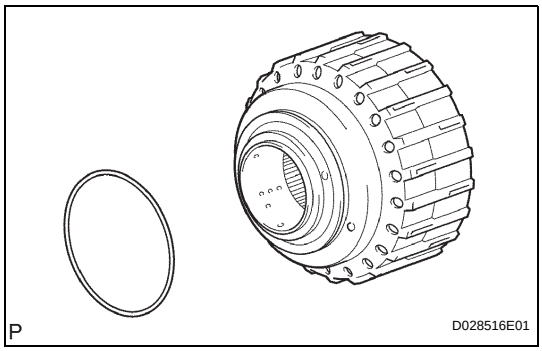

(c) Coat a new O-ring with ATF, and install them onto the clutch drum sub-assembly.
(d) Be careful not to damage the O-rings. Press in the direct clutch piston into the clutch drum with both hands.

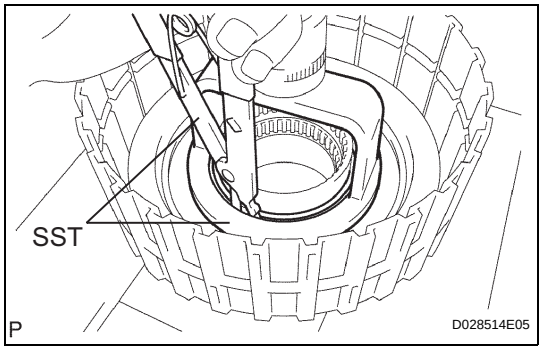

(e) Place SST on the direct clutch piston, and compress the return spring with a press.
SST 09320-89010, 09350-30020 (09350-07070)
(f) Install the snap ring with a snap ring expander.
NOTICE:
- **Make sure that the end gap of the snap ring is not aligned with the spring retainer claw.**
- **Stop pressing when the spring seat is lowered to the place 1 to 2 mm (0.039 to 0.078 in.) from the snap ring groove to prevent the spring seat from being deformed.**
- **Do not expand the snap ring excessively.**

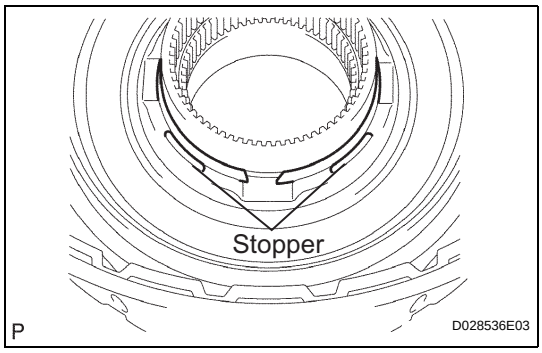

(g) Set the end gap of the snap ring in the piston as shown in the illustration.

AT

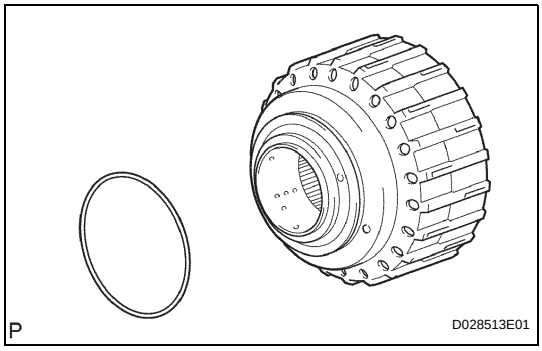

2. INSTALL REVERSE CLUTCH PISTON SUB-ASSEMBLY
(a) Coat a new O-ring with ATF, and install it onto the clutch drum sub-assembly.

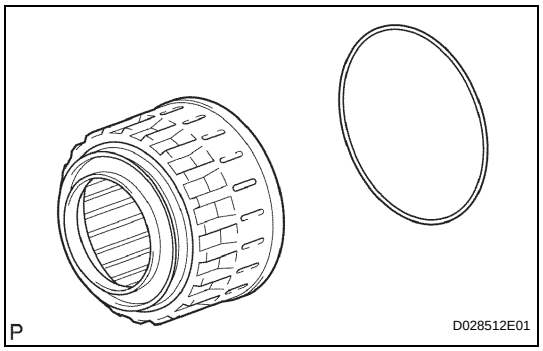

(b) Coat a new O-ring with ATF, and install it onto the reverse clutch piston sub-assembly.

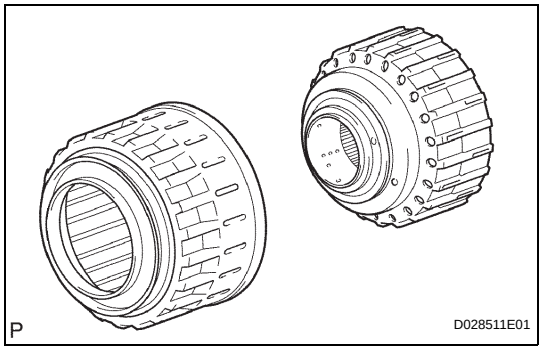

(c) Be careful not to damage the O-ring. Press in the clutch drum sub-assembly into the reverse clutch piston with both hands.

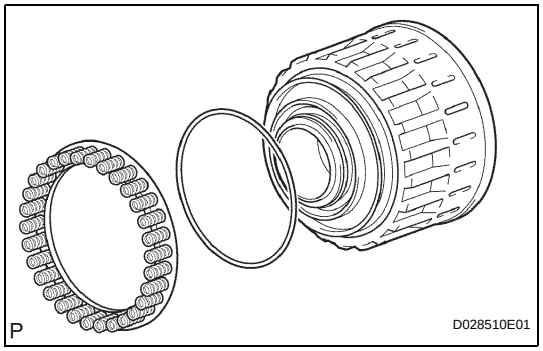

3. INSTALL REVERSE CLUTCH RETURN SPRING SUB-ASSEMBLY

(a) Coat a new O-ring with ATF, and install it onto the reverse clutch piston sub-assembly.

(b) Install the reverse clutch return spring onto the reverse clutch piston sub-assembly.

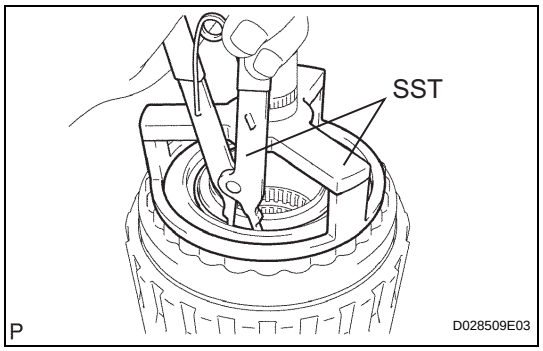

4. INSTALL NO. 3 CLUTCH BALANCER

(a) Place SST on the No. 3 clutch balancer, and compress the return spring with a press.
SST 09387-00070, 09350-30020 (09350-07070)

(b) Install the snap ring with a snap ring expander.

(c) Make sure that the end gap of the snap ring is not aligned with the spring retainer claw.
NOTICE:
- **Stop pressing when the spring seat is lowered to the place 1 to 2 mm (0.039 to 0.078 in.) from the snap ring groove to prevent the spring seat from being deformed.**
- **Do not expand the snap ring excessively.**

AT

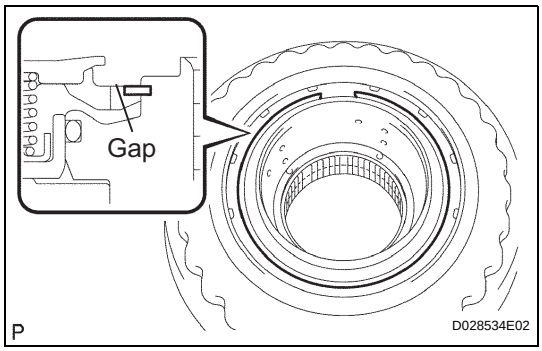

(d) Set the end gap of the snap ring in the piston as shown in the illustration.

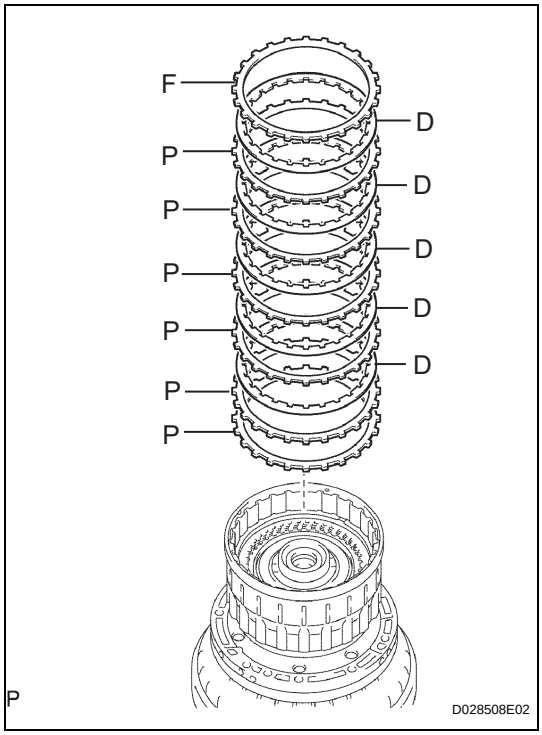

5. INSTALL DIRECT CLUTCH DISK

(a) Install the reverse clutch flange, 6 plates and 5 discs onto the clutch drum sub-assembly.
Install in order:
P - P - D - P - D - P - D - P - D - P - D - F
HINT:
P = Plate, D = Disc, F = Flange

AT

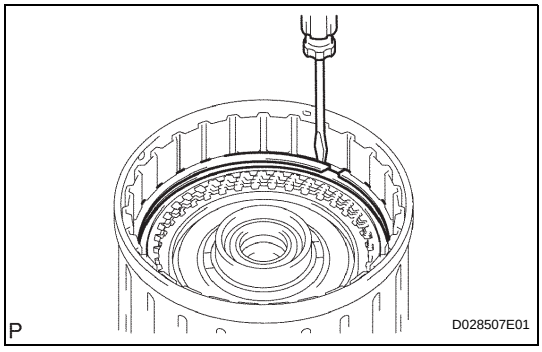

(b) Using a screwdriver, install the 2 hole snap rings onto the clutch drum sub-assembly.

6. INSPECT PACK CLEARANCE OF DIRECT CLUTCH (See page AT-261)

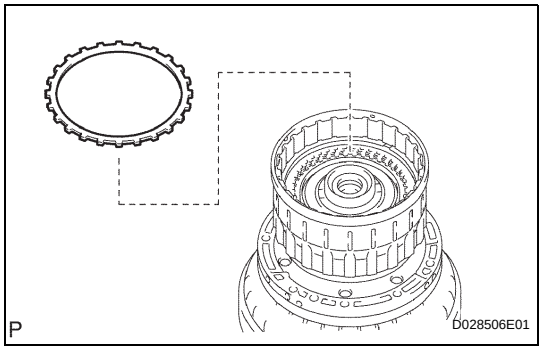

7. INSTALL REVERSE CLUTCH FLANGE

(a) Install the reverse clutch flange onto the clutch drum sub-assembly.

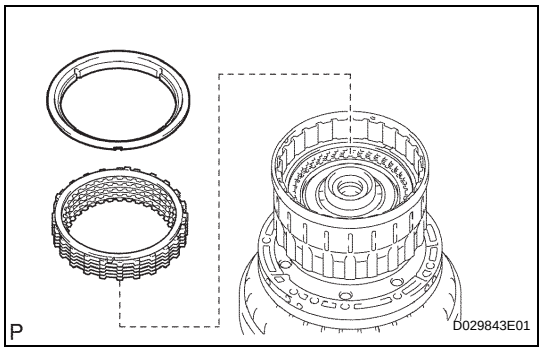

8. INSTALL REVERSE CLUTCH REACTION SLEEVE

(a) Install the reverse clutch reaction sleeve, clutch cushion plate, reverse clutch flange, 5 reverse clutch discs, and 4 clutch plates onto the reverse clutch hub.

(b) Using a screwdriver, install the hole snap ring.

9. INSPECT PACK CLEARANCE OF REVERSE CLUTCH (See page AT-262)

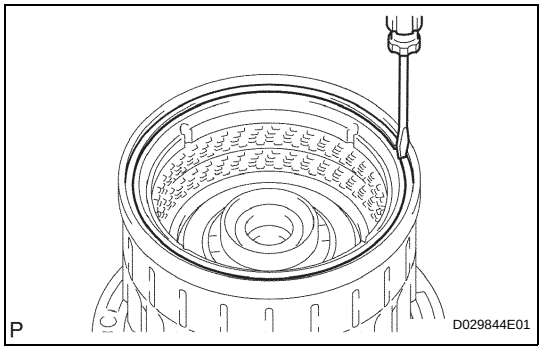

10. REMOVE REVERSE CLUTCH REACTION SLEEVE

(a) Using a screwdriver, remove the snap ring from the clutch drum assembly.

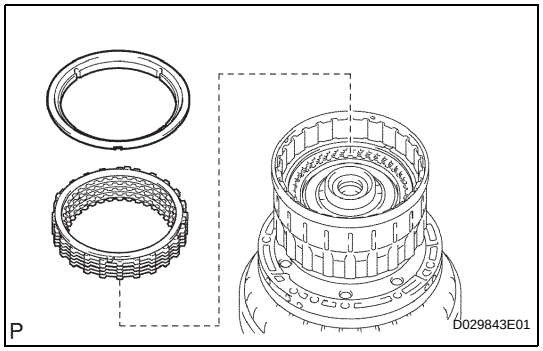

(b) Remove the reverse clutch reaction sleeve, clutch cushion plate, reverse clutch flange, 5 reverse clutch discs, and 4 clutch plates from the reverse clutch hub sub-assembly.

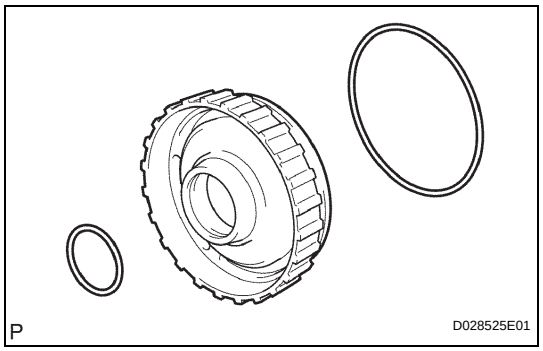

11. INSTALL FORWARD CLUTCH PISTON

(a) Coat 2 new O-rings with ATF, and install them onto the No. 1 forward clutch piston.

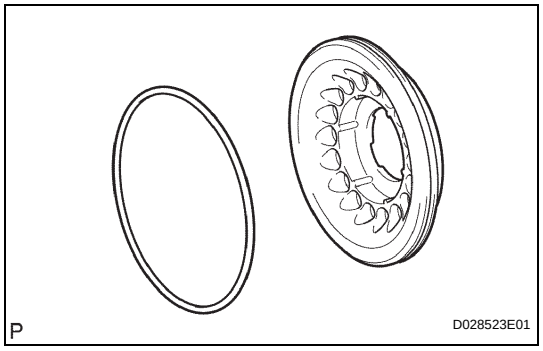

12. INSTALL NO. 1 CLUTCH BALANCER

(a) Coat a new O-ring with ATF and install it on the clutch balancer.

AT

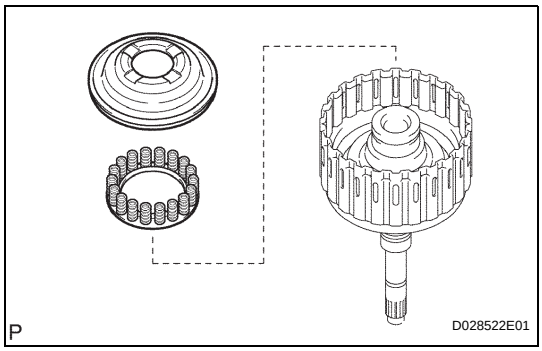

(b) Install the No. 1 clutch balancer and forward clutch return spring sub-assembly.
NOTICE:
Be careful not to damage the O-ring.

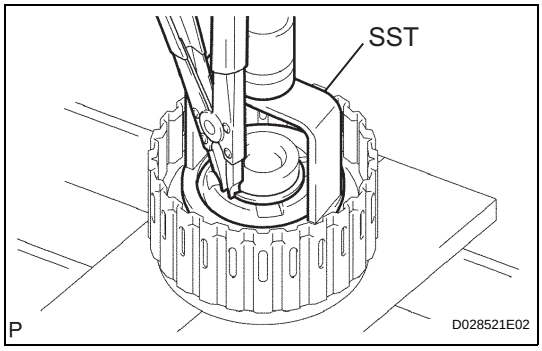

(c) Place SST on the No. 1 clutch balancer, and compress the return spring with a press.
SST 09350-30020 (09350-07040, 09350-07070)
(d) Install the snap ring with a snap ring expander.
(e) Make sure that the end gap of the snap ring is not aligned with the spring retainer claw.
NOTICE:
- **Stop pressing when the spring seat is lowered to the place 1 to 2 mm (0.039 to 0.078 in.) from the snap ring groove to prevent the spring seat from being deformed.**
- **Do not expand the snap ring excessively.**

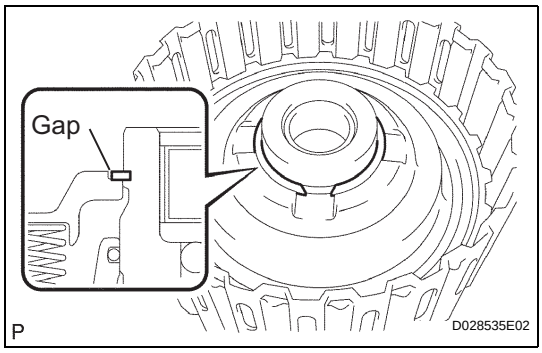

(f) Set the end gap of the snap ring in the piston as shown in the illustration.

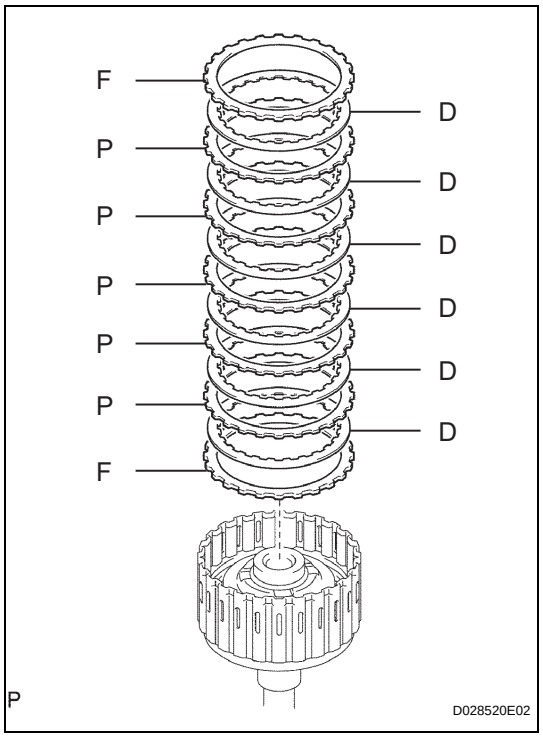

13. INSTALL FORWARD MULTIPLE DISC CLUTCH DISC

(a) Install the 2 flanges, 6 discs and 5 plates onto the input shaft assembly.

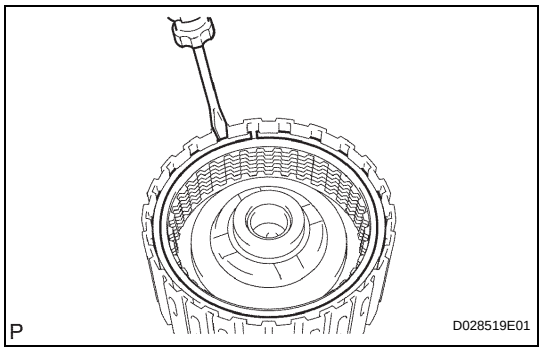

(b) Install in order:

F- D - P - D - P - D - P - D - P - D - P - D - F

HINT:

P = Plate, D = Disc, F = Flange

Using a screwdriver, install the hole snap ring.

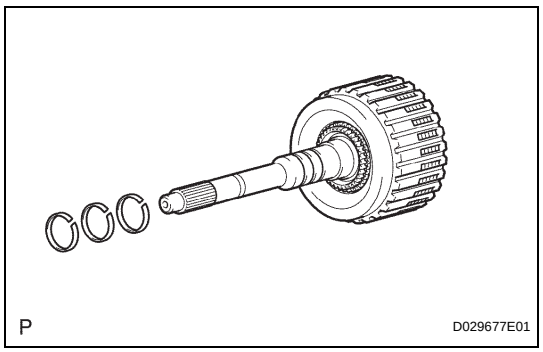

14. INSTALL INPUT SHAFT OIL SEAL RING

(a) Coat the 3 oil seal rings with ATF.

(b) Put together the ends of the 3 oil seal rings together, and then install them onto the stator shaft groove.

NOTICE:

Do not over-widen the ring ends.

HINT:

After installing the oil seal rings, check that they rotate smoothly.

15. INSPECT PACK CLEARANCE OF FORWARD CLUTCH (See page AT-263)

AT

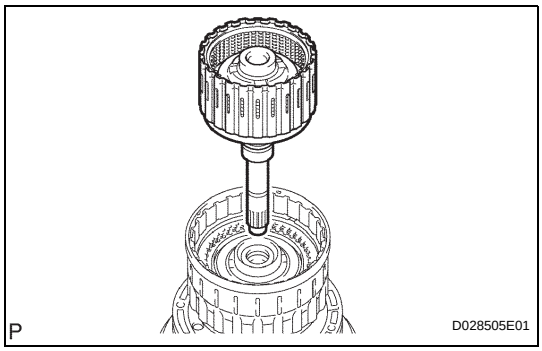

16. INSTALL INPUT SHAFT ASSEMBLY

(a) Install the input shaft assembly onto the clutch drum.

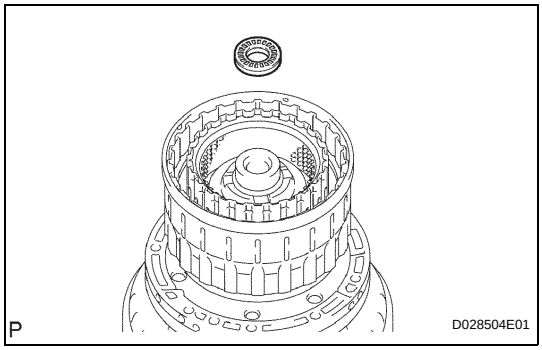

(b) Install the thrust needle roller bearing onto the clutch drum assembly.

Thrust needle roller bearing diameter

Item	Inside	Outside
Thrust needle roller bearing	21.3 mm (0.839 in.)	41.1 mm (1.618 in.)

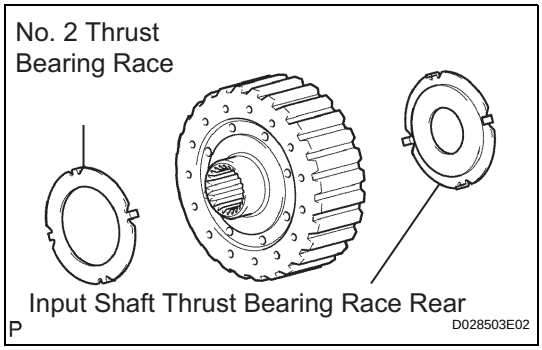

17. INSTALL MULTIPLE DISC CLUTCH HUB

(a) Install the No. 2 thrust bearing race and input shaft thrust bearing race rear onto the multiple disc clutch hub.

Bearing and race diameter

Item	Inside	Outside
Thrust bearing race No. 2	38.4 mm (1.512 in.)	63.0 mm (2.480 in.)
Input shaft bearing race RR	22.6 mm (0.890 in.)	60.0 mm (2.362 in.)

AT

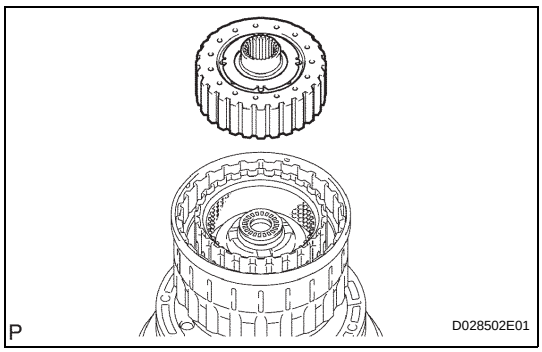

(b) Install the multiple disc clutch hub onto the clutch drum assembly.

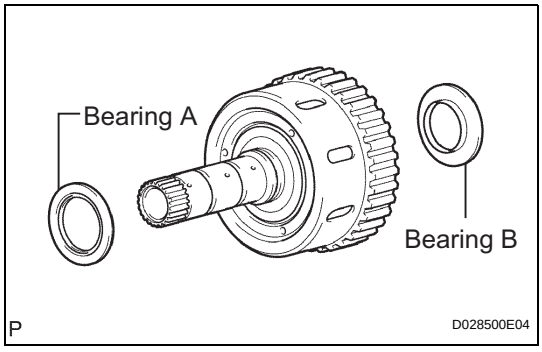

18. INSTALL FORWARD CLUTCH HUB SUB-ASSEMBLY

(a) Install the 2 thrust needle roller bearings onto the forward clutch hub sub-assembly.

Bearing and race diameter

Item	Inside	Outside
Bearing A	42.5 mm (1.673 in.)	61.2 mm (2.409 in.)
Bearing B	33.3 mm (1.311 in.)	56.6 mm (2.228 in.)

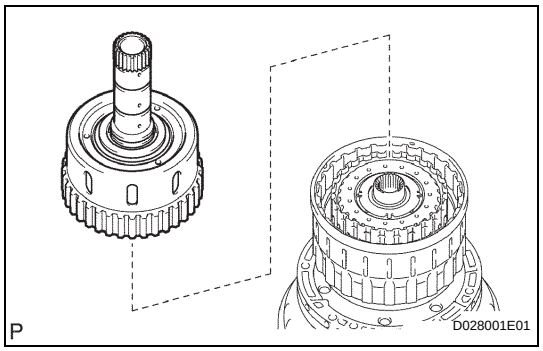

(b) Install the forward clutch hub sub-assembly onto the clutch drum assembly.

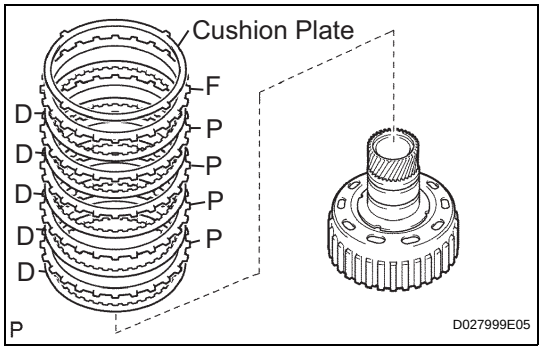

19. INSTALL REAR CLUTCH DISC

(a) Install the clutch cushion plate, reverse clutch flange, 4 plates and 5 discs onto the reverse clutch hub.

Install in order:

D - P - D - P - D - P - D - P - D - F

HINT:

P = Plate, D = Disc, F = Flange

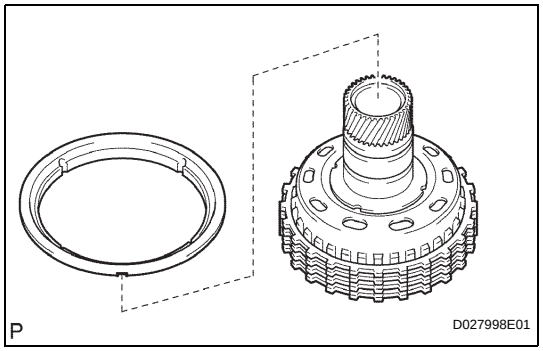

20. INSTALL REVERSE CLUTCH REACTION SLEEVE

(a) Install the reverse clutch reaction sleeve onto the reverse clutch hub.

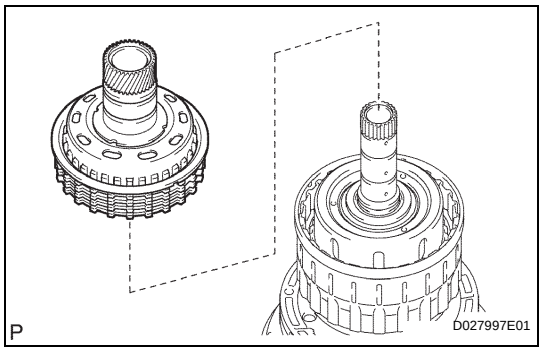

21. INSTALL REVERSE CLUTCH HUB SUB-ASSEMBLY

(a) Install the reverse clutch hub sub-assembly, reverse clutch reaction sleeve, clutch cushion plate, reverse clutch flange, 5 reverse clutch discs, and 4 clutch plates onto the clutch drum assembly.

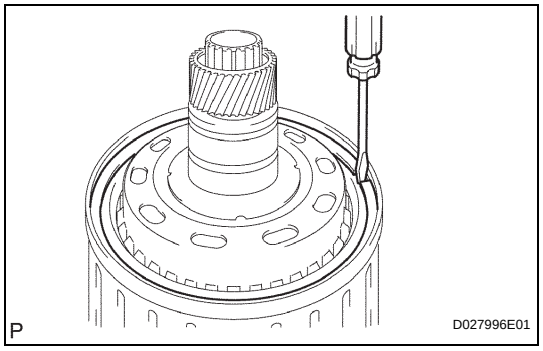

(b) Using a screwdriver, install the snap ring onto the clutch drum and input shaft assembly.

AT

VALVE BODY

COMPONENTS

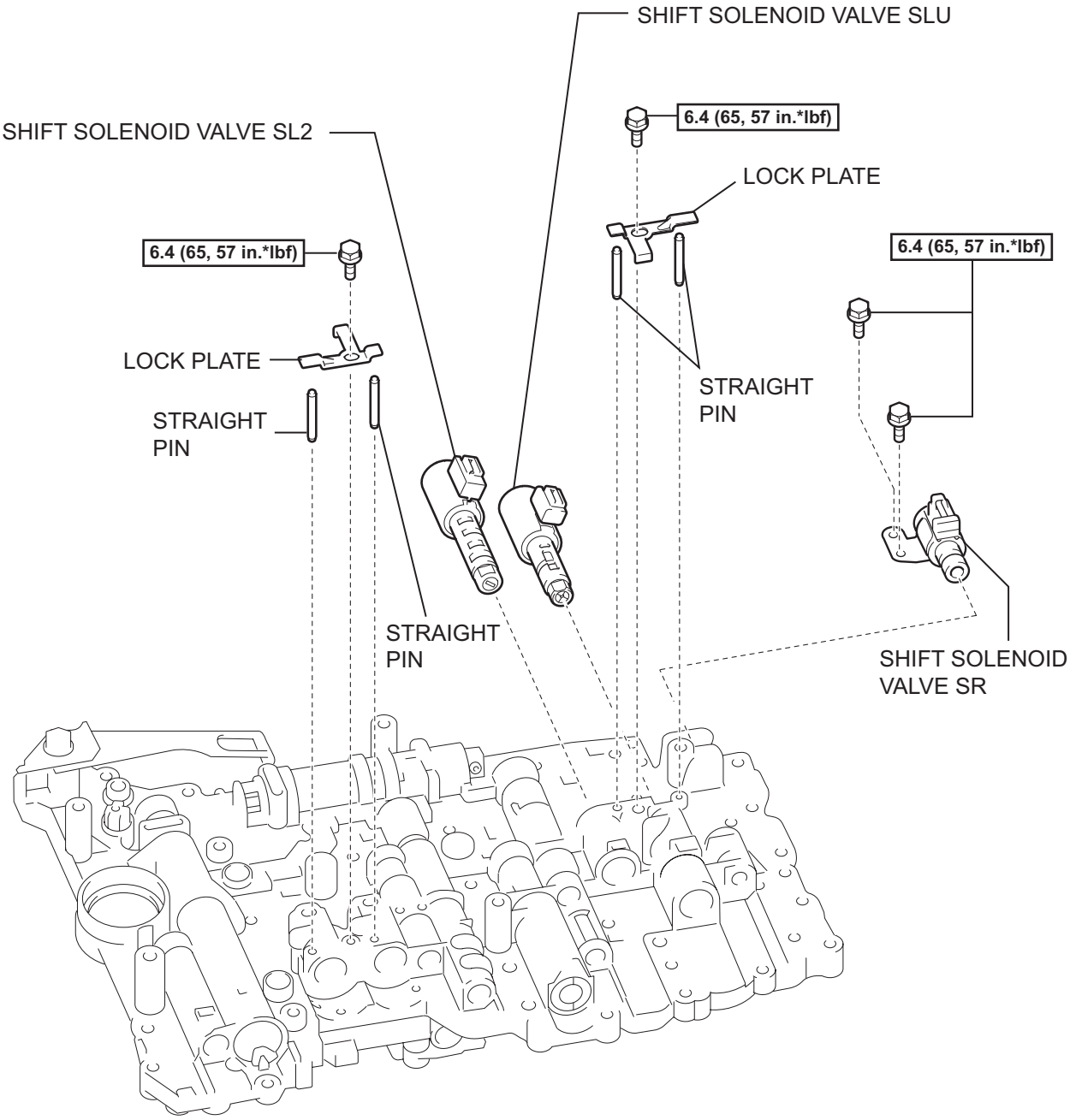

N*m (kgf*cm, ft*lbf) :Specified torque

P

C111205E03

AT

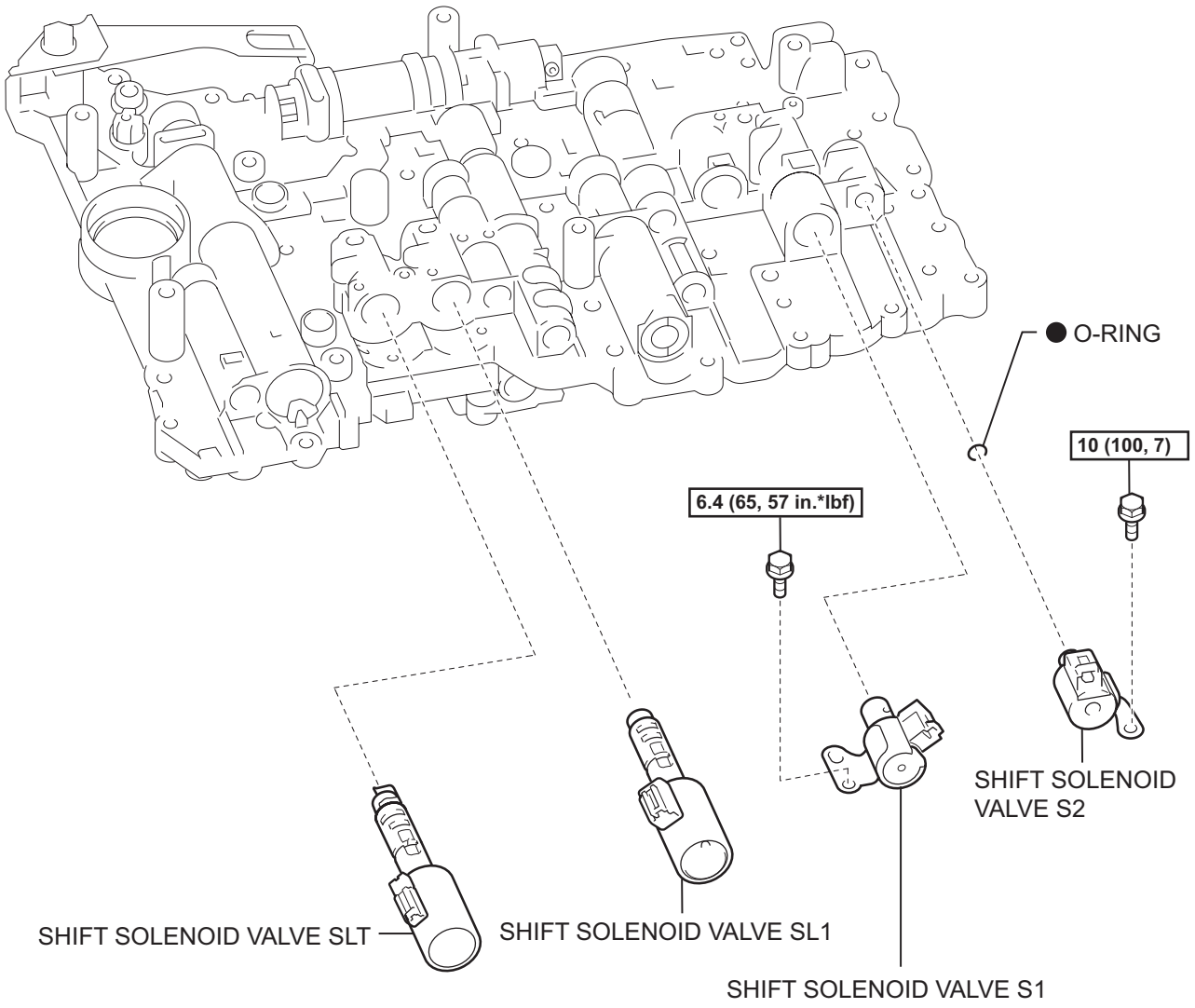

AT

N*m (kgf*cm, ft*lbf) :Specified torque

● Non-reusable part

P

C111206E03

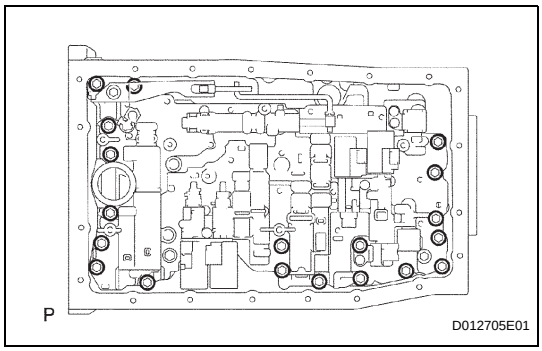

DISASSEMBLY

1. REMOVE TRANSMISSION VALVE BODY ASSEMBLY

(a) Remove the 19 bolts.

(b) Remove the valve body assembly.

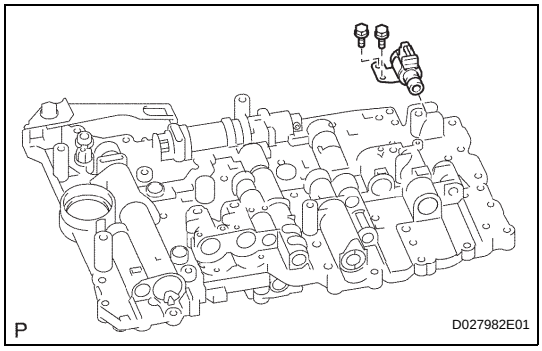

2. REMOVE SHIFT SOLENOID VALVE SR

(a) Remove the 2 bolts and the shift solenoid valve SR.

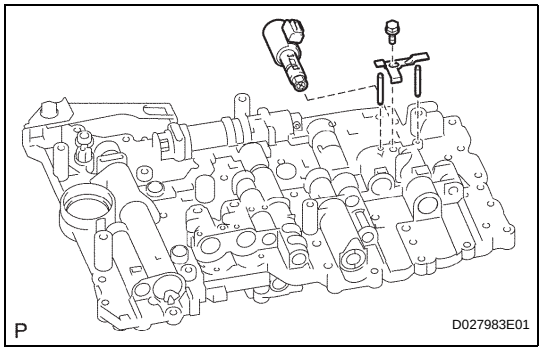

3. REMOVE SHIFT SOLENOID VALVE SLU

(a) Remove the bolt, 2 straight pins and the solenoid lock plate.

(b) Remove the shift solenoid valve SLU.

AT

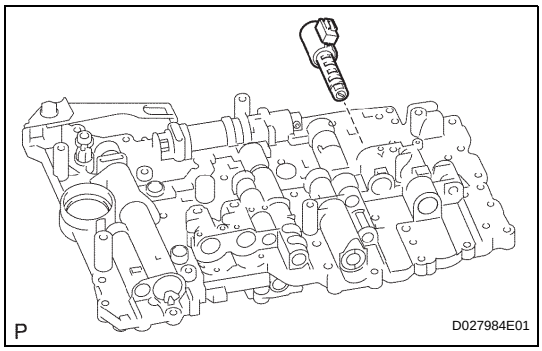

4. REMOVE SHIFT SOLENOID VALVE SL2

(a) Remove the shift solenoid valve SL2.

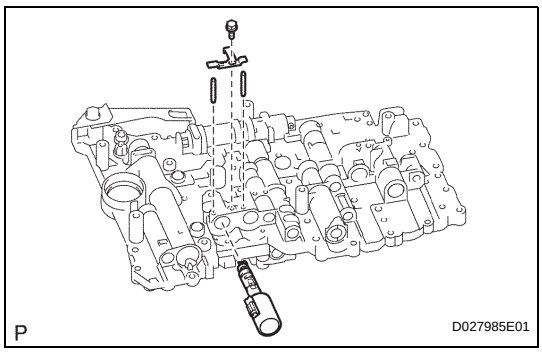

5. REMOVE SHIFT SOLENOID VALVE SLT

(a) Remove the bolt, 2 straight pins and the solenoid lock plate.

(b) Remove the shift solenoid valve SLT.

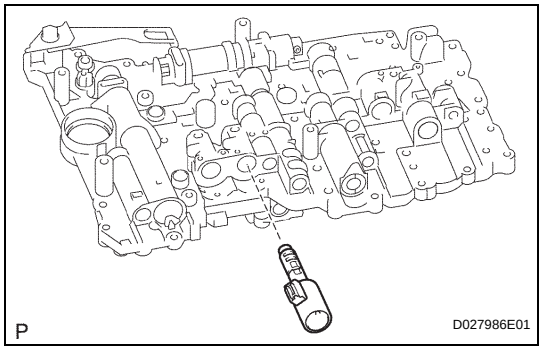

6. REMOVE SHIFT SOLENOID VALVE SL1

(a) Remove the shift solenoid valve SL1.

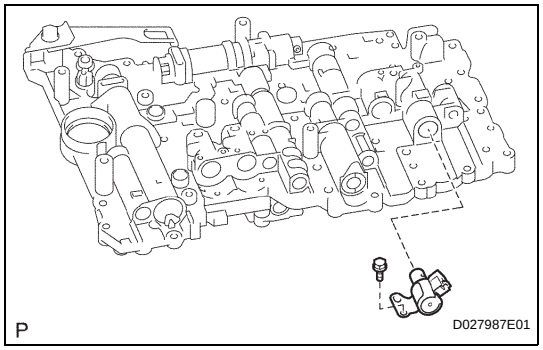

7. REMOVE SHIFT SOLENOID VALVE S1

(a) Remove the bolt and the shift solenoid valve S1.

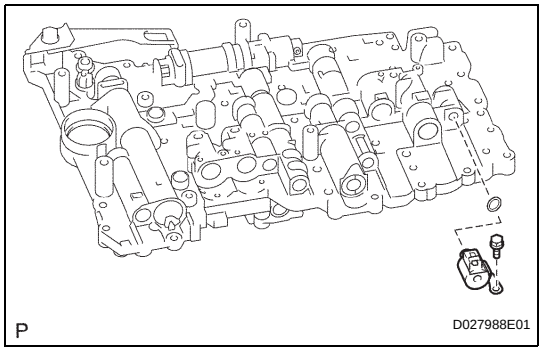

8. REMOVE SHIFT SOLENOID VALVE S2

(a) Remove the bolt and the shift solenoid valve S2.

(b) Remove the O-ring from the shift solenoid valve S2.

REASSEMBLY

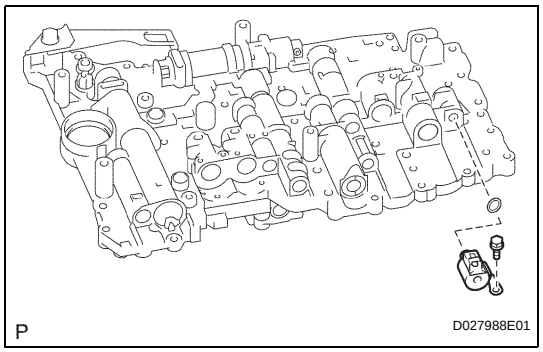

1. INSTALL SHIFT SOLENOID VALVE S2

(a) Install a new O-ring onto the shift solenoid valve S2.

(b) Install the shift solenoid valve S2 with the bolt.
Torque: 10 N*m (100 kgf*cm, 7 ft.*lbf)

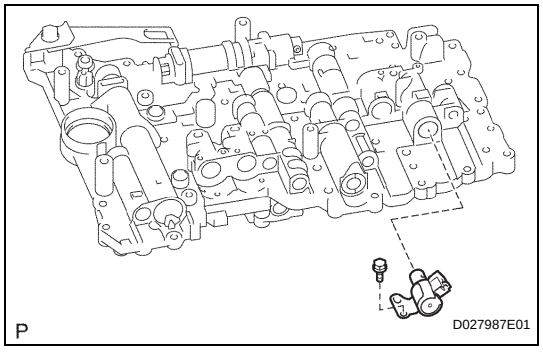

2. INSTALL SHIFT SOLENOID VALVE S1

(a) Install the shift solenoid valve S1 with the bolt.
Torque: 6.4 N*m (65 kgf*cm, 57 in.*lbf)

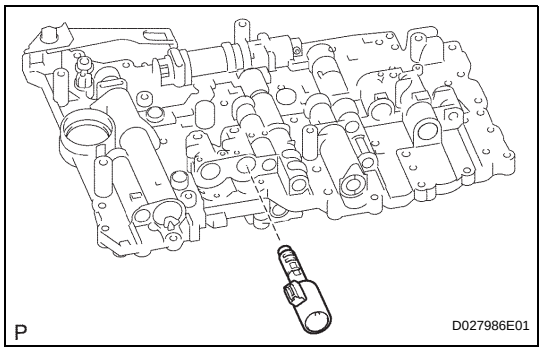

3. INSTALL SHIFT SOLENOID VALVE SL1

(a) Install the shift solenoid valve SL1.

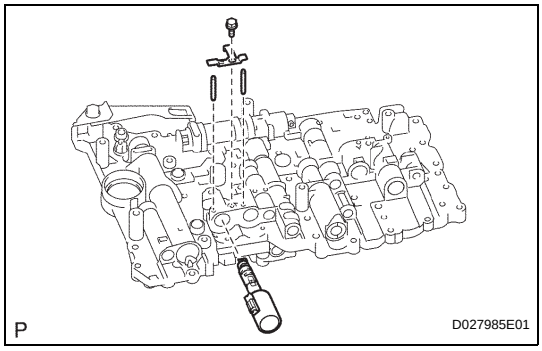

4. INSTALL SHIFT SOLENOID VALVE SLT

(a) Install the shift solenoid valve SLT.

(b) Install the bolt, 2 straight pins and solenoid lock plate.

Torque: 6.4 N*m (65 kgf*cm, 57 in.*lbf)

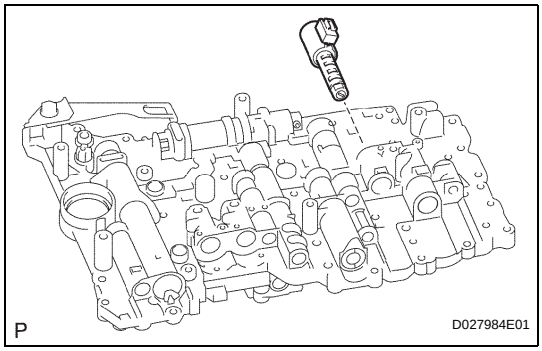

5. INSTALL SHIFT SOLENOID VALVE SL2

(a) Install the shift solenoid valve SL2.

AT

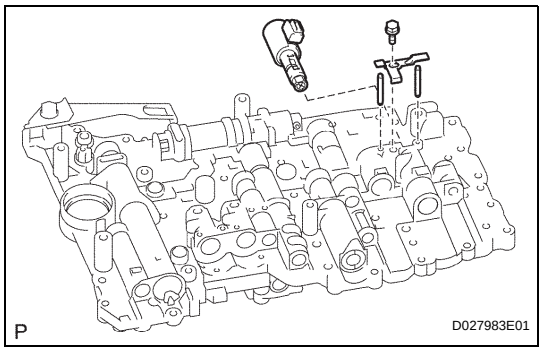

6. INSTALL SHIFT SOLENOID VALVE SLU

(a) Install the shift solenoid valve SLU.

(b) Install the bolt, 2 straight pins and solenoid lock plate.

Torque: 6.4 N*m (65 kgf*cm, 57 in.*lbf)

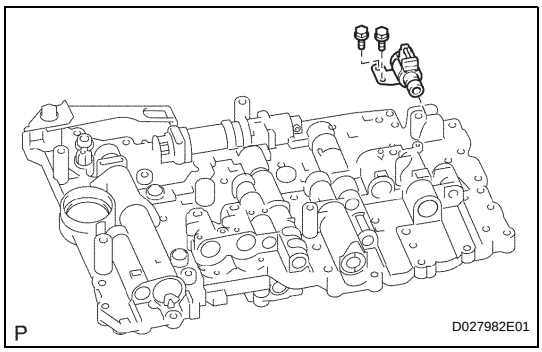

7. INSTALL SHIFT SOLENOID VALVE SR

(a) Install the shift solenoid valve SR with the 2 bolts.

Torque: 6.4 N*m (65 kgf*cm, 57 in.*lbf)

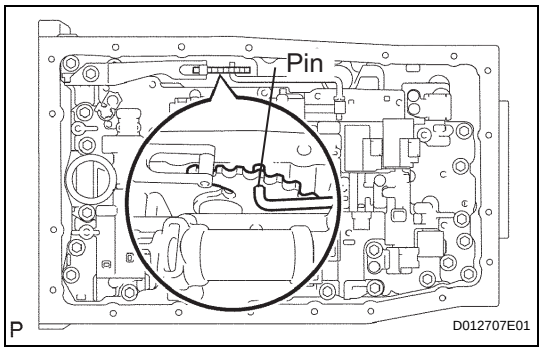

8. INSTALL TRANSMISSION VALVE BODY ASSEMBLY

(a) Align the groove of the manual valve with the pin of the lever.

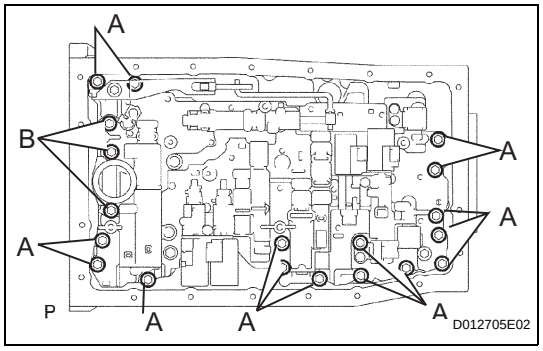

(b) Install the 19 bolts.
Torque: 11 N*m (112 kgf*cm, 8 ft.*lbf)
HINT:
Bolt length:
25 mm (0.98 in.) for bolt A
36 mm (1.42 in.) for bolt B

AT

AIR CONDITIONING SYSTEM

PRECAUTION

NOTICE:
When the cable is disconnected from the negative (-) battery terminal, initialize the following system(s) after the cable is reconnected.

System name	See procedure
METER / GAUGE SYSTEM	See page ME-10

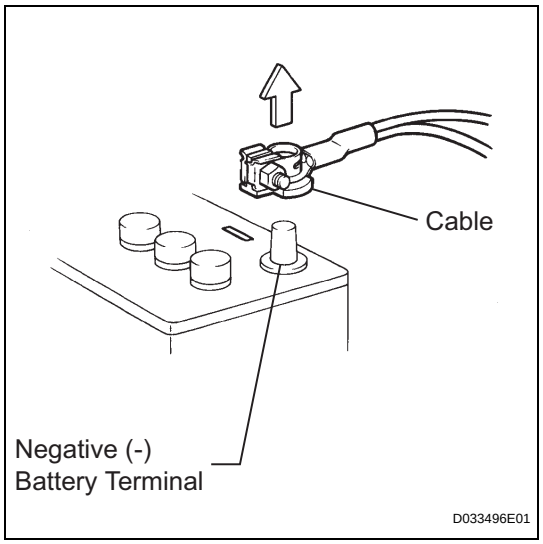

1. Before performing electronic work, disconnect the cable from the negative (-) battery terminal in order to prevent it from shorting and burning out.
2. Before disconnecting and reconnecting the battery cable, turn the ignition switch OFF and the headlight dimmer switch OFF. Then loosen the terminal nut completely. Do not damage the cable or terminal.
3. When the battery cable is disconnected, the clock and radio settings and stored DTCs are erased. Therefore, before disconnecting the battery cable, make a notes of them.

1. CONNECT THE BATTERY NEGATIVE TERMINAL TO THE CABLE AND RUN THE ENGINE AT NO LESS THAN 2,000 RPM FOR 2MINUTE
NOTICE:
If the engine exceeds 2,000 rpm, the clutch is automatically disengaged by the compressor protection control system.

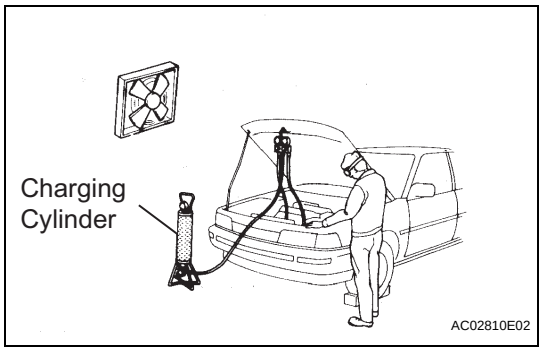

2. DO NOT HANDLE REFRIGERANT IN ENCLOSED AREAS OR NEAR OPEN FLAMES

3. ALWAYS WEAR EYE PROTECTION

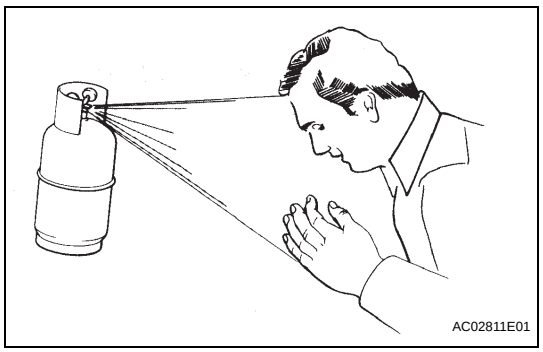

4. BE CAREFUL NOT TO GET LIQUID REFRIGERANT IN YOUR EYES OR ON YOUR SKIN
If liquid refrigerant gets in your eyes or on your skin:
(a) Wash the area with lots of cold water.
CAUTION:
Do not rub your eyes or skin.
(b) Apply clean petroleum jelly to the skin.
(c) Go immediately to a hospital or a physician for professional treatment.

5. NEVER HEAT CONTAINER OR EXPOSE THE CONTAINER TO OPEN FLAME

6. BE CAREFUL NOT TO DROP CONTAINER OR APPLY ANY PHYSICAL SHOCKS TO IT

AC

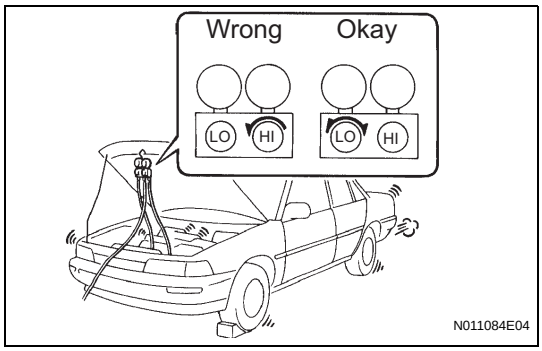

7. DO NOT OPERATE COMPRESSOR WITHOUT ENOUGH REFRIGERANT IN REFRIGERANT SYSTEM

If there is not enough refrigerant in the refrigerant system, oil lubrication will be insufficient and compressor burnout may occur. Necessary care should be taken to avoid this.

8. DO NOT OPEN HIGH PRESSURE MANIFOLD VALVE WHILE COMPRESSOR IS OPERATING

Open and close only the low pressure valve. If the high pressure valve is open, refrigerant flows in the reverse direction. This could cause the charging cylinder to rupture.

9. BE CAREFUL NOT TO OVERCHARGE SYSTEM WITH REFRIGERANT

If refrigerant is overcharged, it causes problems such as insufficient cooling, poor fuel economy, engine overheating, etc.

10. DO NOT OPERATE ENGINE AND COMPRESSOR WITH NO REFRIGERANT

CAUTION:

Doing so may damage the inside of the compressor because the compressor parts always move regardless of whether the A/C system is turned on or off.

11. SUPPLEMENTAL RESTRAINT SYSTEM (SRS)

(a) This vehicle is equipped with an SRS (Supplemental Restraint System) such as the driver, front passenger, side, and curtain shield air bags. Failure to carry out service operation in the correct sequence could cause the SRS to unexpectedly deploy during servicing, possibly leading to a serious accident. Before servicing (including removal or installation of parts, inspection or replacement), be sure to read the precautionary notices (see page RS-1).

12. GENERAL PRECAUTION

(a) While using the battery during inspection, do not bring the positive and negative tester probes too close to each other as a short circuit may occur.

AC

PARTS LOCATION

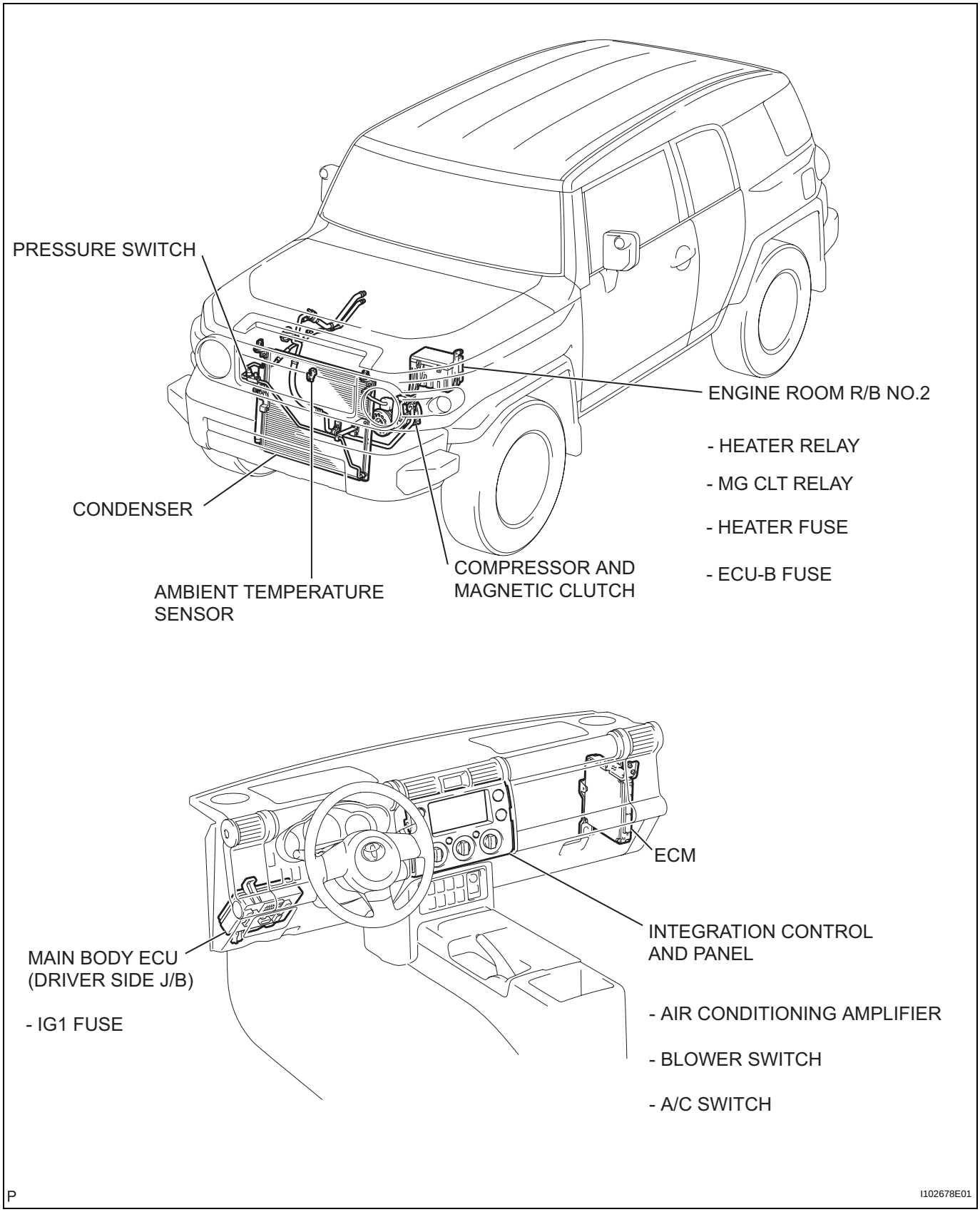

AC

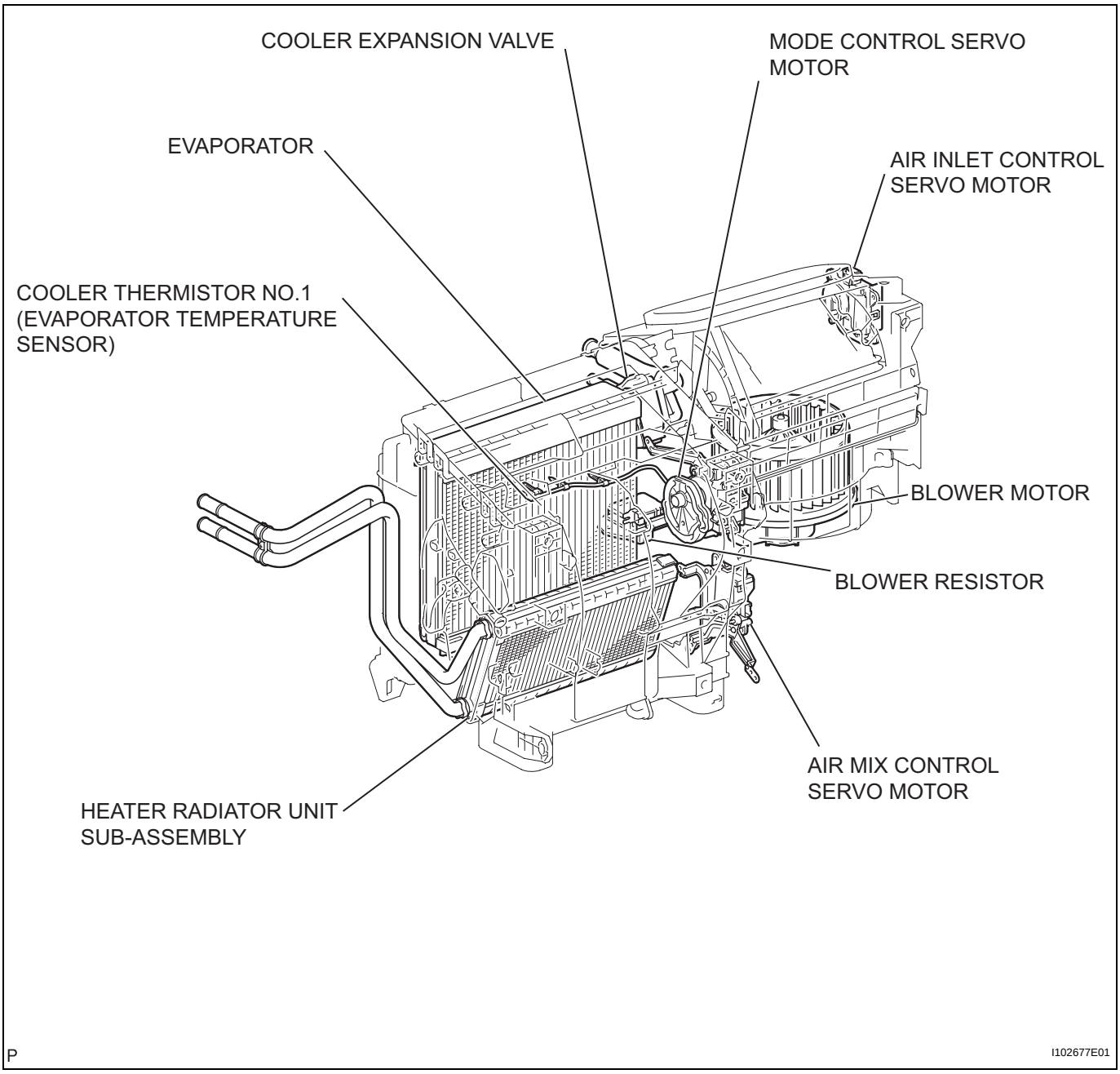
COOLER EXPANSION VALVE
MODE CONTROL SERVO MOTOR
EVAPORATOR
AIR INLET CONTROL SERVO MOTOR
COOLER THERMISTOR NO.1 (EVAPORATOR TEMPERATURE SENSOR)
BLOWER MOTOR
BLOWER RESISTOR
AIR MIX CONTROL SERVO MOTOR
HEATER RADIATOR UNIT SUB-ASSEMBLY
P
I102677E01

AC

SYSTEM DIAGRAM

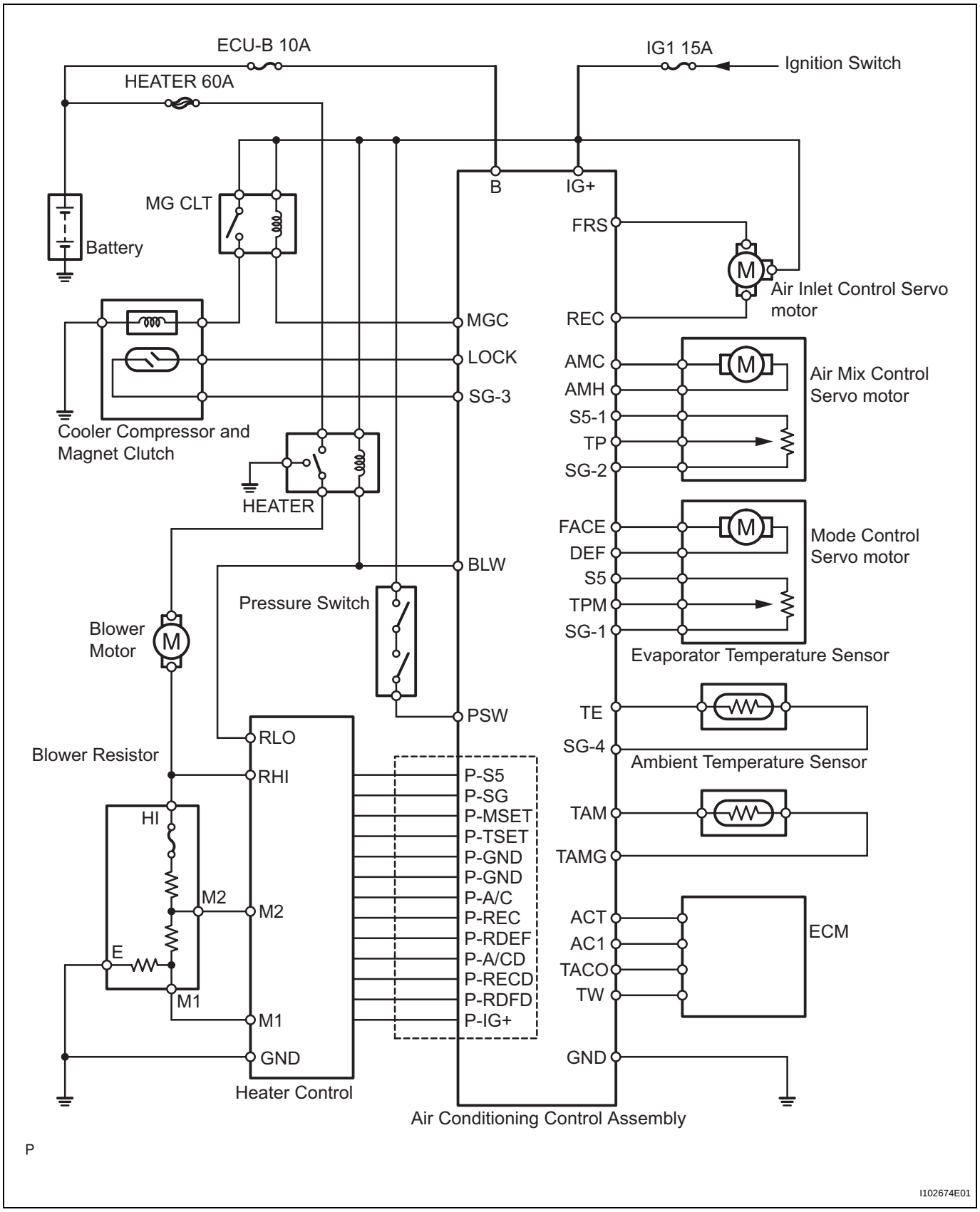

PROBLEM SYMPTOMS TABLE

HINT:

- Use the table below to help determine the cause of the problem symptom. The potential causes of the symptoms are listed in order of probability in the "Suspected Area" column of the table. Check each symptom by checking the suspected areas in the order they are listed. Replace parts as necessary.
- Inspect the fuses and relays related to this system before inspecting the suspected areas below.
- If the malfunction still exists even after checking and confirming that all the circuits are normal, replace the A/C amplifier.

Air conditioning system

Symptom	Suspected area	See page
No Cool Air Comes Out: Compressor Not Operating	Volume of refrigerant	AC-12
	Pressure switch	AC-104
	Magnetic clutch	AC-88
	Air conditioning amplifier assembly	AC-8
	Compressor pick up sensor	AC-88
	Cooler compressor	AC-88
	Wire harness or connector	-
No Cool Air Comes Out: Blower Not Operating	HTR fuse	-
	Heater relay	AC-106
	Blower resistor	AC-83
	Blower motor	AC-81
	Air conditioning panel assembly	AC-110
	Air conditioning amplifier assembly	AC-8
	Wire harness or connector	-
No Cool Air Comes Out: Air Mix Damper Servo Not Operating	Air mix control servo motor	AC-44
	Air conditioning panel assembly	AC-110
	Wire harness or connector	-
No Cool Air Comes Out: Insufficient Cooling	Volume of refrigerant	AC-12
	Blower motor performance check	AC-81
	Air mix damper servo full travel check	AC-44
	Recirculation damper servo operation check	AC-74
No Engine Idle-up when A/C Switch ON	Air conditioning amplifier assembly	AC-8
	Idling control system	ES-251
	Wire harness or connector	-
No Warm Air Comes Out: Blower Not Operating	HTR fuse	-
	IG1 fuse	-
	Heater relay	AC-106
	Blower resistor	AC-83
	Blower motor	AC-81
	Air conditioning panel assembly	AC-110
	Wire harness or connector	-
No Warm Air Comes Out: Air Mix Damper Servo Not Operating	Air mix control servo motor	AC-44
	Air conditioning panel assembly	AC-110
	Wire harness or connector	-

Symptom	Suspected area	See page
No Warm Air Comes Out: Insufficient Cooling	Volume of engine coolant	CO-3
	Air conditioning panel assembly	AC-110
	Blower motor performance check	AC-81
	Air mix damper servo full travel check	AC-44
	Recirculation damper servo operation check	AC-74
	Heater radiator	-
Air Not Coming From Desired Outlets: Blower Not Operating	HTR fuse	-
	IG1 fuse	-
	Heater relay	AC-106
	Blower resistor	AC-83
	Blower motor	AC-81
	Air conditioning panel assembly	AC-106
	Wire harness or connector	-
Air Not Coming From Desired Outlets: Air Mix Damper Servo Not Operating	Air mix control servo motor	AC-44
	Wire harness or connector	-
Windshield Fogging: Compressor Not Operating	IG1 fuse	-
	Volume of refrigerant	AC-12
	Magnetic clutch	AC-88
	Cooler thermistor sensor	AC-44
	Air conditioning amplifier assembly	AC-8
	Compressor pick up sensor	AC-88
	Cooler compressor	AC-88
	Wire harness or connector	-
Windshield Fogging: Blower Not Operating	HTR fuse	-
	Heater relay	AC-106
	Blower resistor	AC-83
	Blower motor	AC-81
	Air conditioning panel assembly	AC-110
	Wire harness or connector	-
Windshield Fogging: Air Mix Damper Servo Not Operating	Air mix control servo motor	AC-44
	Air conditioning panel assembly	AC-110
	Wire harness or connector	-
Windshield Fogging: Insufficient Cooling	Volume of refrigerant	AC-12
	Blower motor performance check	AC-81
	Air mix damper servo full travel check	AC-44
	Recirculation damper servo operation check	AC-74
Defrosting Insufficient:	Blower motor	AC-81
	Mode doors: Check cooling, heating & door operation	-
	Mode control servo motor: Hot air not coming, Go to no warm air comes out	-
	Mode control servo motor: Cold air not coming, Go to no cold air comes out	-
Noise:	Blower motor: Inspect blower motor for debris/cracks	-
	Fresh air intake area: Inspect fresh air intake area for debris	-
Noise:	Cooler compressor: Cooler compressor incorrectly fitted	AC-90
	Magnetic clutch	AC-88
	Refrigerant charge amount	AC-20
	Compressor mounting bracket: Compressor mounting bracket incorrectly fitted	EM-27
	A/C lines secure & not grounded	-

Symptom	Suspected area	See page
Odor (Cycle through blower speed, mode, temperature to define odor type when engine is running and A/C switch is ON. (Musty smell, coolant oil smell))	Wet carpet: Inspect for water, engine coolant or oil leaks	-
	A/C drain tube: Inspect for water, engine coolant or oil leaks	-
	Fresh air intake area: Inspect for water, engine coolant or oil leaks	-
	Heater hose: Inspect for water, engine coolant or oil leaks	-
	Evaporator: Inspect for water, engine coolant or oil leaks	-
	Evapo case: Inspect for water, engine coolant or oil leaks	-
Air Not Coming from Desired Outlets (Cycle the mode lever and check airflow for outlets when engine is running, A/C switch is ON.)	Blower motor	AC-81
	Mode control servo motor	AC-44
	Mode doors: Check cooling, heating & door operation	-
	Wire harness or connector	-
	Air conditioning panel assembly	AC-110

TERMINALS OF ECU

1. INSPECT AIR CONDITIONING AMPLIFIER ASSEMBLY

(a) Disconnect the E32 and E33 connectors from the air conditioning amplifier assembly and inspect the connector on the wire harness side, as shown in the table below.

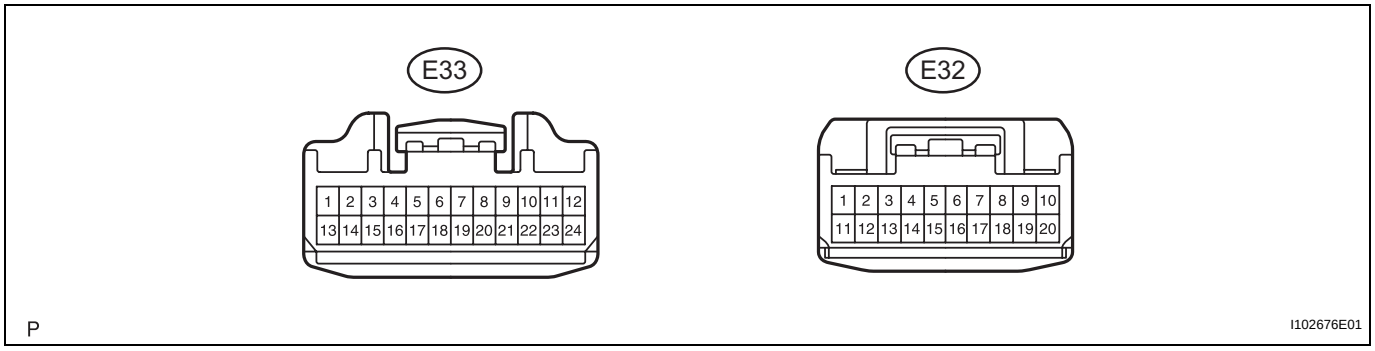

AC

Standard:

Symbols (Terminals No.)	Wiring Colors	Terminal Descriptions	Conditions	Specified Condition
IG+ (E32-1) - GND (E32-20)	Y-R - W-B	Power source (IG)	Ignition switch: OFF → ON	Below 1.0 → 11 to 14 V
B (E32-11) - GND (E32-20)	W-R - W-B	Power source (Back-up)	Always	11 to 14 V
SG-1 (E33 - 17) - Body ground	V-G - Body ground	Ground for mode control servo motor	Always	Below 1.0 Ω
SG-2 (E33 - 18) - Body ground	Y-G - Body ground	Ground for air mix control servomotor	Always	Below 1.0 Ω
SG-3 (E33 - 6) - Body ground	G-Y - Body ground	Ground for lock sensor	Always	Below 1.0 Ω
SG-4 (E32 - 9) - Body ground	GR-G - Body ground	Ground for A/C evaporator temperature sensor	Always	Below 1.0 Ω
TAMG (E33 - 16) - Body ground	GR - Body ground	Ground for ambient temperature sensor	Always	Below 1.0 Ω
GND (E32-20) - Body ground	W-B - Body ground	Ground for main power supply	Always	Below 1.0 Ω

If the results are not as specified, inspect the circuits connected to the other parts.

(b) Reconnect the E32 and E33 connectors to the air conditioning amplifier assembly and inspect the wire harness side connector from the back side, as shown in the table below.

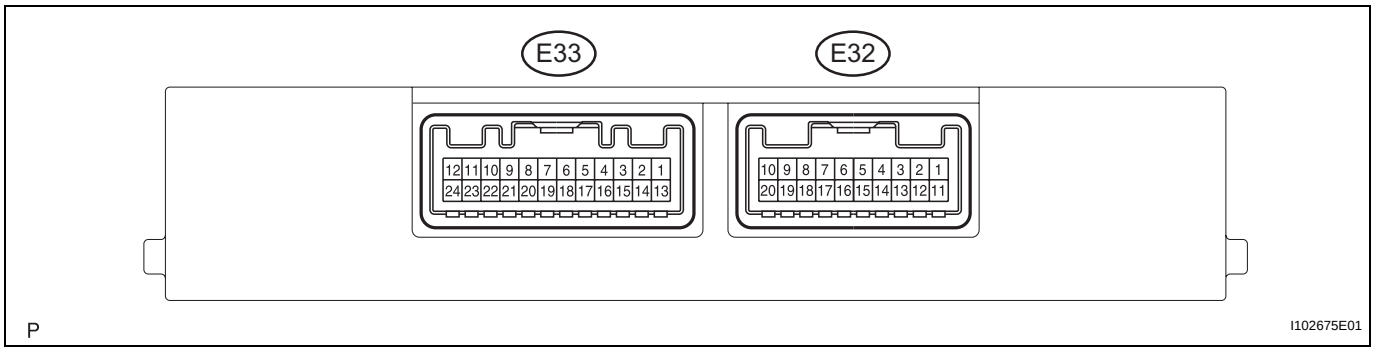

Standard:

Symbols (Terminals No.)	Wiring Colors	Terminal Descriptions	Conditions	Specified Condition
DEF (E33-9) - GND (E32-20)	LG - W-B	Mode switch signal	Ignition switch: ON Mode select switch: Except DEF → DEF	Below 1.5 → 11 to 14 V
LOCK (E33-8) - SG-3 (E33-6)	R-W - G-Y	Magnet clutch signal	Start engine Operate A/C system Magnet clutch: ON	Pulse generation (See waveform 1)
ACI (E33-24) - GND (E32-20)	G-W - W-B	Idle up request signal	Engine idling Operate A/C system Magnet clutch: OFF → ON	11 to 14 → Below 1.0 V
FRS (E32-6) - GND (E32-20)	V-W - W-B	Recirculation/Fresh switch signal	Ignition switch: ON Recirculation/Fresh switch: RECIRCULATION → FRESH	11 to 14 → Below 1.0 V
REC (E32-7) - GND (E32-20)	P-B - W-B	Recirculation/Fresh switch signal	Ignition switch: ON Recirculation/Fresh switch: FRESH → RECIRCULATION	11 to 14 → Below 1.0 V
MGC (E32-4) - GND (E32-20)	LG-B - W-B	Magnet clutch relay signal	Engine idling Operate A/C system Magnet clutch: OFF → ON	11 to 14 → Below 1.0 V
PSW (E33-22) - GND (E32-20)	LG-R - W-B	A/C pressure switch signal	Start engine Operate A/C system Refrigerant pressure: Normal (Less than 0.196 MPa (2.0 kgf/cm^2)) or more than 3.14 MPa (32.0 kgf/cm^2))	11 to 14 → Below 1.0 V
BLW (E32-8) - GND (E32-20)	Y - W-B	Blower switch signal	Ignition switch: ON Blower switch: ON OFF → ON (LO, M1, M2, HI)	11 to 14 → Below 1.0 V
TE (E32-10) - SG-4 (E32-9)	B - GR-G	A/C evaporator temperature sensor signal	Ignition switch: ON Evaporator temperature: 0 → 15°C (32 → 59°F)	1.7 to 2.1 → 0.9 to 1.3 V
TAM (E33-13) - TAMG (E33-16)	Y - GR	Ambient temperature sensor signall	Ignition switch: ON Ambient temperature: 25 → 40°C (77 → 104°F)	1.7 to 2.1 → 1.3 to 1.8 V
RDFG (E32-5) - GND (E32-20)	Y-V - W-B	Defogger switch signal	Ignition switch: ON Defogger switch: OFF → ON	11 to 14 → Below 1.0 V
S5 (E33-19) - SG-1 (E33-17)	P - V-G	Power supply for mode control servo motor	Ignition switch: OFF → ON	0 to 5.0 V
S5-1 (E33-7) - SG-2 (E33-18)	P-B - Y-G	Power supply for air mix control servomotor	Ignition switch: OFF → ON	0 to 5.0 V
SG-1 (E33 - 17) - Body ground	V-G - Body ground	Ground for mode control servo motor	Always	Below 1.0 Ω
SG-2 (E33 - 18) - Body ground	Y-G - Body ground	Ground for air mix control servomotor	Always	Below 1.0 Ω
SG-3 (E33 - 6) - Body ground	G-Y - Body ground	Ground for lock sensor	Always	Below 1.0 Ω
SG-4 (E32 - 9) - Body ground	GR-G - Body ground	Ground for A/C evaporator temperature sensor	Always	Below 1.0 Ω
TAMG (E33 - 16) - Body ground	GR - Body ground	Ground for ambient temperature sensor	Always	Below 1.0 Ω
GND (E32-20) - Body ground	W-B - Body ground	Ground for main power supply	Always	Below 1.0 Ω
IG+ (E32-1) - Body ground	Y-R - Body ground	Power source (IG)	Ignition switch: OFF → ON	Below 1.0 → 11 to 14 V
B (E32-11) - Body ground	W-R - Body ground	Power source (Back-up)	Always	11 to 14 V

AC

If the results are not as specified, replace the air conditioning amplifier assembly with a new one. If the results are still not as specified after replacing the air conditioning control assembly, inspect the circuits connected to other parts.

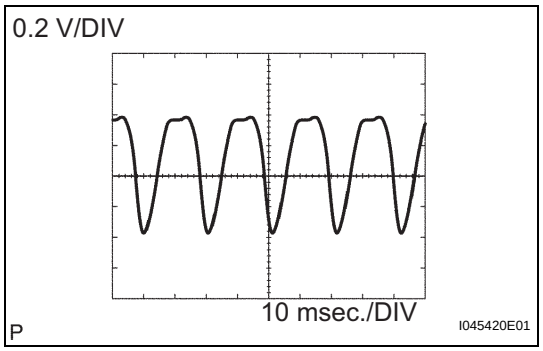

(1) WAVEFORM 1:
Magnet clutch signal

ECM Terminal Names	Between LOCK (E33-8) - SG-3 (E33-6)
Tester Ranges	0.2 V/DIV, 10 msec./DIV
Conditions	Idling

HINT:
The wavelength becomes shorter as the engine rpm increases.

2. INSPECT ECM

(a) Connect the connector to the ECM and inspect the wire harness side connector from the back side, as shown in the table below.

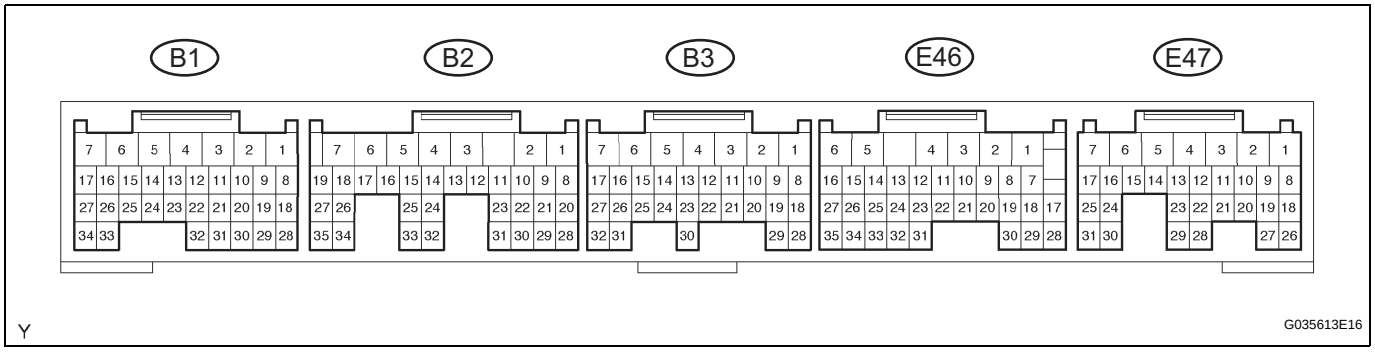

Standard voltage:

Symbols (Terminals No.)	Wiring Colors	Terminal Descriptions	Conditions	Specified Condition
ACT (E46-25) - E1 (B3-1)	L-W - BR	Magnet clutch ON permit signal	Start engine Operate A/C system A/C switch OFF Blower switch OFF → A/C switch ON Blower switch ON	Below 1.0 → 11 to 14 V
AC1 (E46-24) - E1 (B3-1)	G-W - BR	Idle-up request signal	Start engine A/C magnet clutch is engaged → not engaged	Below 1.0 → 11 to 14 V
THWO (E46-14) - E2 (B1-28)	BR-B - W-G	Engine coolant temperature sensor signal	Engine idling Engine coolant temperature 80°C (176°F)	Pulse generation (See waveform 1)

If the result is not as specified, the ECM may have a malfunction.

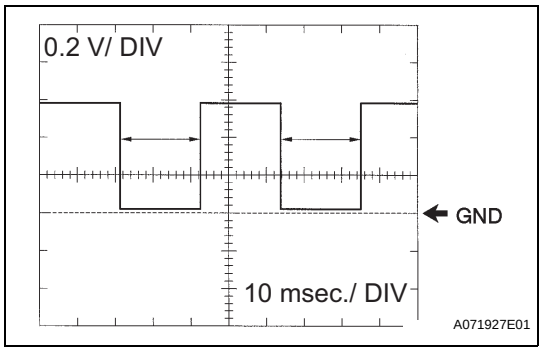

(1) WAVEFORM 1:
Magnet clutch signal

ECM Terminal Names	Between THWO (E46-14) - E2 (B1-28)
Tester Ranges	0.2 V/DIV, 10 msec./DIV
Conditions	Idling

HINT:
The wavelength becomes shorter as the engine rpm increases.

AC

REFRIGERANT

ON-VEHICLE INSPECTION

1. CHECK REFRIGERANT PRESSURE USING MANIFOLD GAUGE SET

(a) This is a method to identify trouble areas by using a manifold gauge set. Read the manifold gauge pressure under the following conditions.
Test conditions:
- Engine warm.
- All doors fully open.
- A/C switch ON.
- Blower speed control switch at HI.
- Engine running at 1,500 rpm.
- Air inlet mode damper set at recirculation.
- Temperature control lever in MAX. COLD position.
- Air temperature at air inlet 30 to 35°C (86 to 95°F).

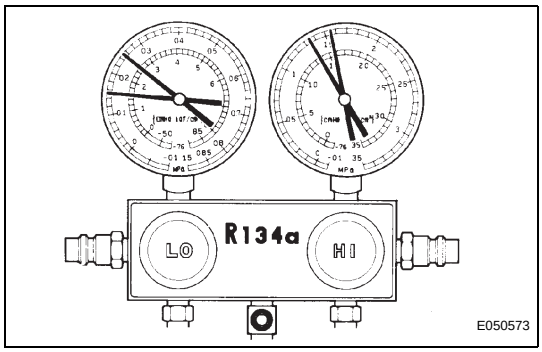

(1) When the refrigerant volume is correct, the gauge reading indicates as follows:
Low pressure side:
0.15 to 0.25 MPa (1.5 to 2.5 kgf/cm^2)
High pressure side:
1.37 to 1.57 MPa (14 to 16 kgf/cm^2)
HINT:
Pressure varies in accordance with certain conditions (outside air temperature, sunlight and wind).

(2) When there is moisture in the refrigeration system:

Condition: Air conditioning system periodically cools and then fails to cool.

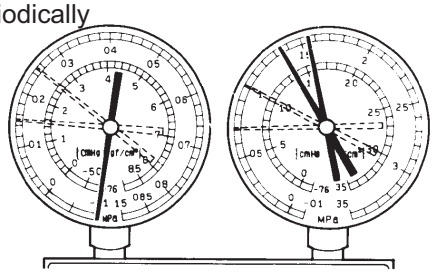

Symptoms	Probable Cause	Diagnosis	Corrective Actions
During operation, pressure on low pressure side cycles between normal and vacuum	Moisture in refrigeration system freezes at expansion valve orifice, causing temporary interruption of cycle However, when melted, returns to normal condition	• Receiver dryer oversaturated • Moisture in refrigeration system freezes at expansion valve orifice and blocks refrigerant circulation	1. Replace receiver dryer 2. Remove moisture from cycle by repeatedly evacuating air 3. Supply appropriate volume of new refrigerant

(3) When cooling is insufficient:

Condition: Air conditioning system does not function effectively.

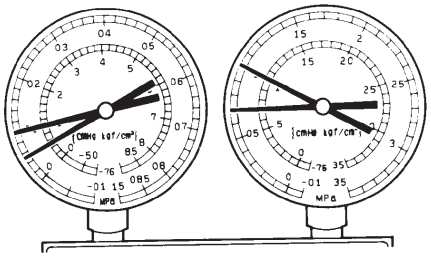

I022118E02

Symptoms	Probable Cause	Diagnosis	Corrective Actions
• Pressure low on both low and high pressure sides • Cooling performance insufficient	Gas leakage from refrigeration system	• Insufficient refrigerant • Refrigerant leakage	1. Check for gas leakage using gas leak detector, and repair if necessary 2. Supply appropriate volume of new refrigerant 3. If indicated pressure value close to 0 when connected to gauge, create vacuum after inspecting and repairing location of leakage

AC

(4) When the circulation of the refrigerant is poor:

Condition: Air conditioning system does not function effectively.

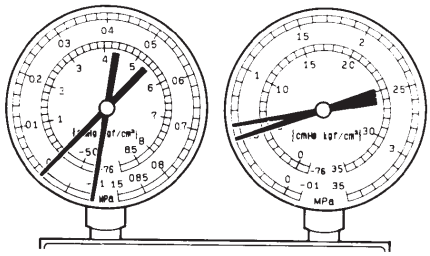

I022119E02

Symptoms	Probable Cause	Diagnosis	Corrective Action
• Pressure low on both low and high pressure sides • Frost exists on piping from condenser to A/C unit	Refrigerant flow obstructed by dirt in condenser	Condenser clogged	Replace condenser

(5) When the refrigerant does not circulate:

Condition: Air conditioning system does not function or functions intermittently.

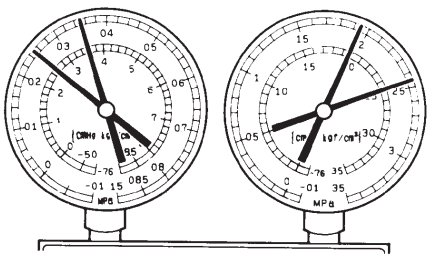

I022121E02

Symptoms	Probable Causes	Diagnosis	Corrective Actions
• Vacuum indicated on low pressure side, and extremely low pressure indicated on high pressure side • Frost or condensation seen on piping on both sides of condenser or expansion valve	• Refrigerant flow obstructed by moisture or dirt in refrigeration system • Refrigerant flow obstructed by gas leakage from expansion valve	Refrigerant does not circulate	1. Check expansion valve 2. Clean expansion valve with compressed air 3. Replace condenser 4. Evacuate air and then supply appropriate volume of new refrigerant 5. For gas leakage from expansion valve, replace expansion valve

(6) When the refrigerant is overcharged or cooling of condenser is insufficient:

Condition: Air conditioning system does not function effectively.

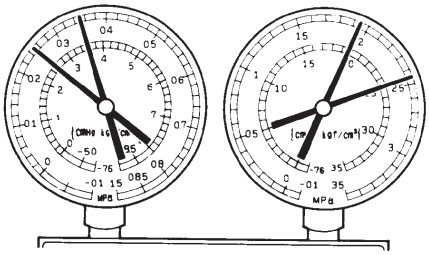

I022121E03

Symptoms	Probable Causes	Diagnosis	Corrective Actions
Pressure extremely high on both sides	• Excessive refrigerant • Cooling performance of condenser insufficient	• Excessive refrigerant • Cooling performance of condenser insufficient	1. Clean condenser fins 2. Check condenser fan motor operation by switching A/C ON 3. If 1 and 2 normal, check amount of refrigerant and supply appropriate volume of refrigerant

(7) When there is air in the refrigeration system:

Condition: Air conditioning system does not function.

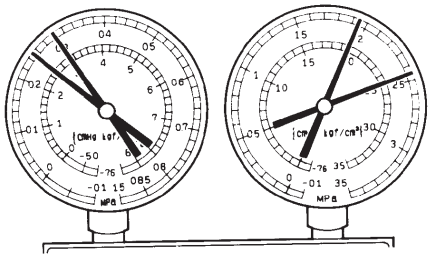

NOTE: These gauge indications occur when the refrigeration system opens and the refrigerant is supplied without performing vacuum purging.

I022122E02

Symptoms	Probable Causes	Diagnosis	Corrective Actions
• Pressure extremely high on both low and high pressure sides • Low pressure piping too hot to touch	Air in refrigeration system	• Air in refrigeration system • Insufficient vacuum purging	1. Check whether compressor oil dirty or insufficient 2. Evacuate air and supply new refrigerant

(8) When the expansion valve malfunctions:

Condition: Air conditioning system does not function effectively.

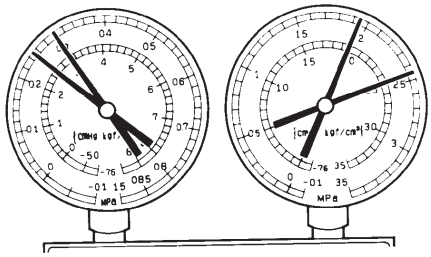

I022123E02

Symptoms	Probable Causes	Diagnosis	Corrective Actions
• Pressure extremely high on both low and high pressure sides • Frost or condensation on piping on low pressure side	Expansion valve malfunction	• Excessive refrigerant in low pressure piping • Expansion valve opening too wide	Replace expansion valve

AC

(9) When the compressor is defective:

Condition: Air conditioning system does not function.

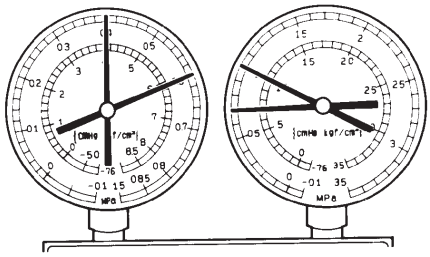

I022124E02

Symptoms	Probable Cause	Diagnosis	Corrective Actions
• Pressure extremely high on both low and high pressure sides • Pressure extremely low on high pressure side	Internal leakage in compressor	• Compression failure of compressor • Leakage from damaged valve or broken sliding parts in compressor	Repair or replace compressor

2. INSPECT IDLING SPEED

(a) Warm up the engine.

(b) Inspect the idling speed when these conditions are established.

- Engine warm
- Blower speed control switch at HI
- Temperature control lever in MAX. COLD position

Standard

Condition	Idling Speed
Switch A/C OFF	**650 to 750 rpm**
Switch A/C ON	**750 to 850 rpm**

If the idling speed is not as specified, check the idle control system.

REPLACEMENT

NOTICE:
When recharging refrigerant, collect together all the refrigerant remaining in the cycle, then recharge and seal the refrigerant as described below. (Do not overcharge.)

1. DISCHARGE REFRIGERANT FROM REFRIGERATION SYSTEM

(a) Start up the engine.
(b) Switch A/C ON.
(c) Turn the blower switch to ON.
(d) Operate the cooler compressor with an engine speed of approximately 1,000 rpm for 5 to 6 minutes to circulate the refrigerant and collect the remaining compressor oil from each component, in the cooler compressor.
(e) Stop the engine.
(f) Remove the caps from the service valves on the refrigerant line.
(g) Connect the Freon collection/recycling device to discharge the refrigerant gas remaining in the refrigeration system.
NOTICE:
Use the Freon collection/recycling device in accordance with the manufacturer's instruction manual.

2. CHARGE REFRIGERANT

SST 07110-58060 (07117-58080, 07117-58090, 07117-78050, 07117-88060, 07117-88070, 07117-88080)

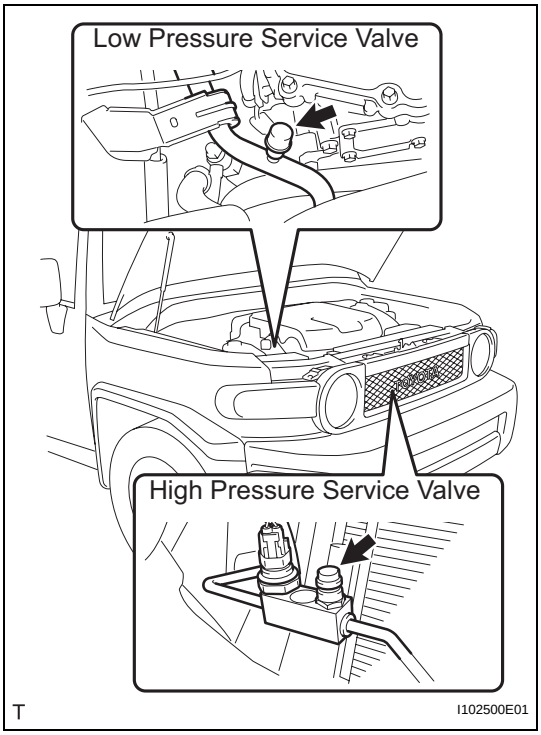

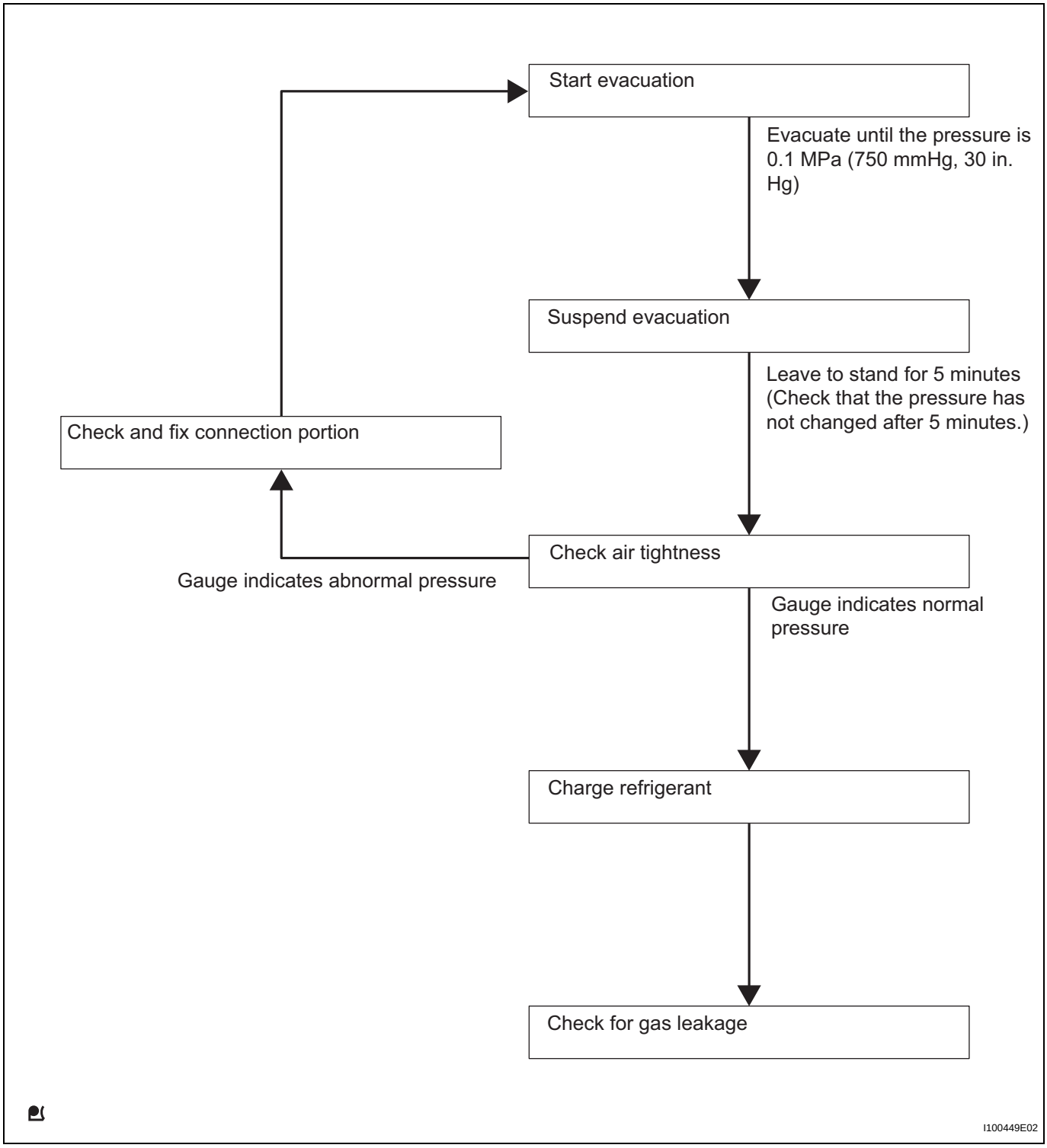

NOTICE:
Charge refrigerant in accordance with equipment manual.

(a) Perform vacuum purging using a vacuum pump.
(b) Charge refrigerant HFC-134a (R134a).
Standard:
570 to 630 g (20.11 to 22.22 oz.)

NOTICE:
Do not start the engine before charging it with refrigerant as the cooler compressor doesn't work properly without sufficient refrigerant. This could cause the compressor to overheat.
HINT:

- The relationship between the refrigerant charge amount and the pressure is as follows.

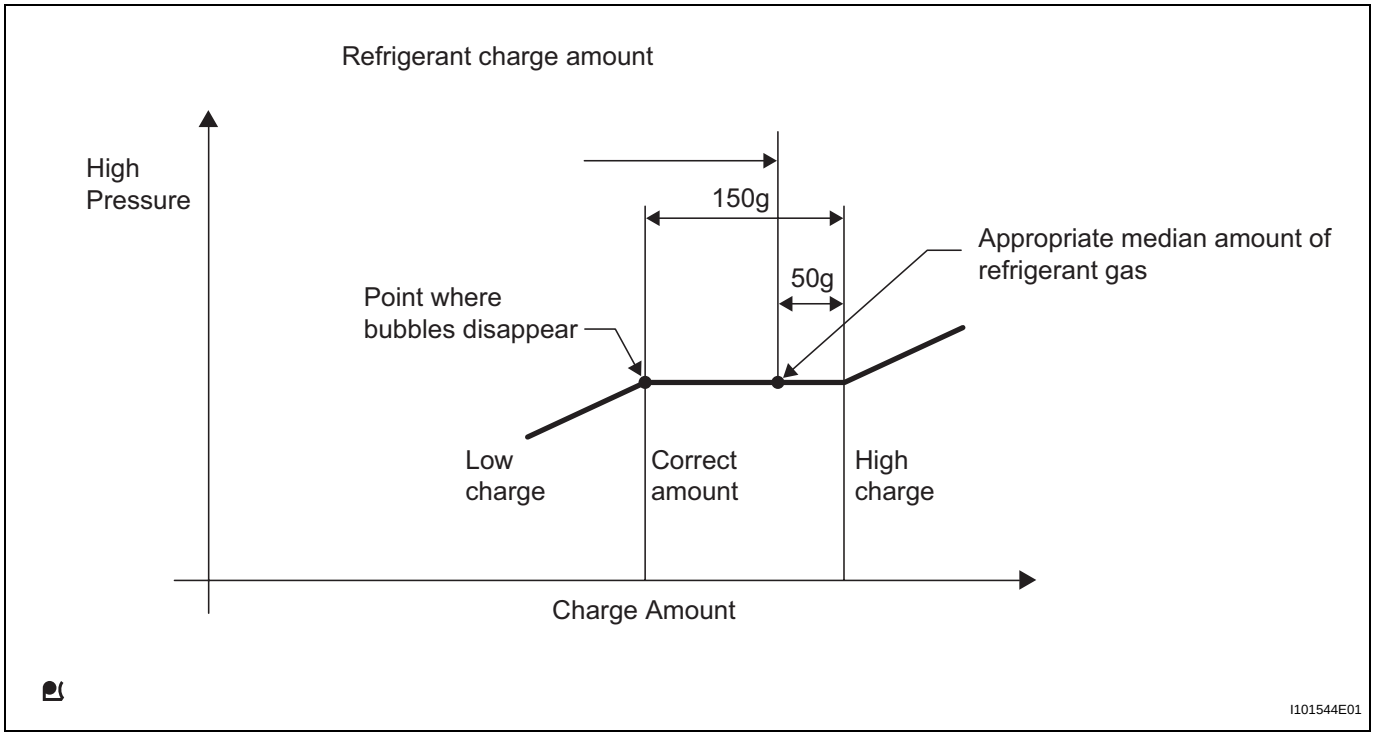

- High Charge Range:
  If the refrigerant is overcharged, the pressure rises on the high-pressure side. High-pressure cut off frequently occurs. This causes insufficient cooling performance and also insufficient compressor lubrication.
- Low Charge Range:
  Shortage of refrigerant causes insufficient cooling performance and low circulation of refrigerant oil, which shortens the compressor life. Operation with insufficient coolant raises refrigerant temperature and causes heat deterioration of the rubber seals and hoses. Cracking and thus refrigerant leakage may occur.

(1) Install the caps onto the service valves on the refrigerant line.

3. WARM UP ENGINE
NOTICE:
Warm up the engine at less than 2,000 rpm for 2 minute or more after charging it with refrigerant.

4. CHECK FOR REFRIGERANT LEAKAGE

(a) After recharging the refrigerant gas, check for refrigerant gas leakage using a halogen leak detector.

(b) Perform the operation as follows:
- Stop the engine.
- Secure good ventilation (the halogen leak detector may react to volatile gases other than refrigerant, such as evaporated gasoline or exhaust gas).
- Repeat the test 2 or 3 times.
- Make sure that some refrigerant remains in the refrigeration system.
  When the compressor is off: approximately 392 to 588 kPa (4 to 6 kgf*cm^2, 57 to 85 psi)

HINT:
It is impossible for the above pressure to be maintained if there is leakage.

(c) Using the halogen leak detector, check the refrigerant line, especially at the connection points, for leakage.

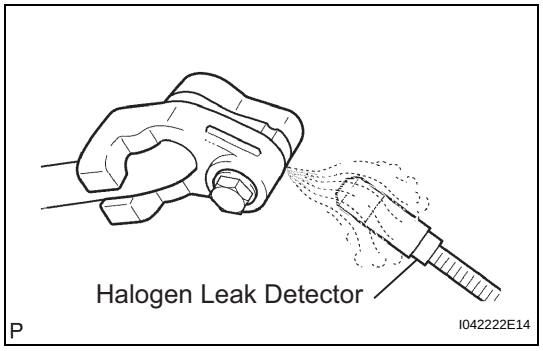

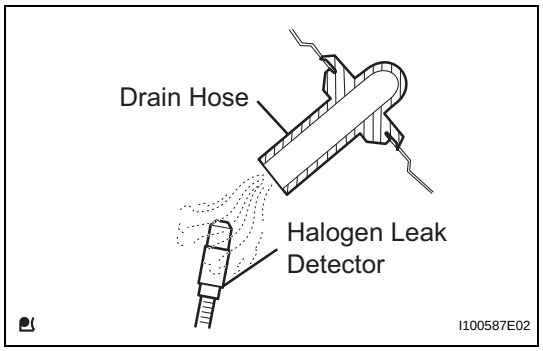

(d) Bring the halogen leak detector close to the drain hose before performing the test.
HINT:
- After the blower motor has stopped, leave the cooling unit for at least 15 minutes.
- Place the halogen leak detector sensor under the drain hose.
- When bringing the halogen leak detector close to the drain hose, make sure that the halogen leak detector does not react to the volatile gases.

If such a reaction is unavoidable, the vehicle must be lifted up.

(e) If no gas leakage is detected from the drain hose, remove the blower motor from the cooling unit. Insert the halogen leak detector sensor into the unit and perform the test.

(f) Disconnect the pressure switch connector and leave it for approximately 20 minutes. Bring the halogen leak detector close to the pressure switch and perform the test.

REFRIGERANT LINE

COMPONENTS

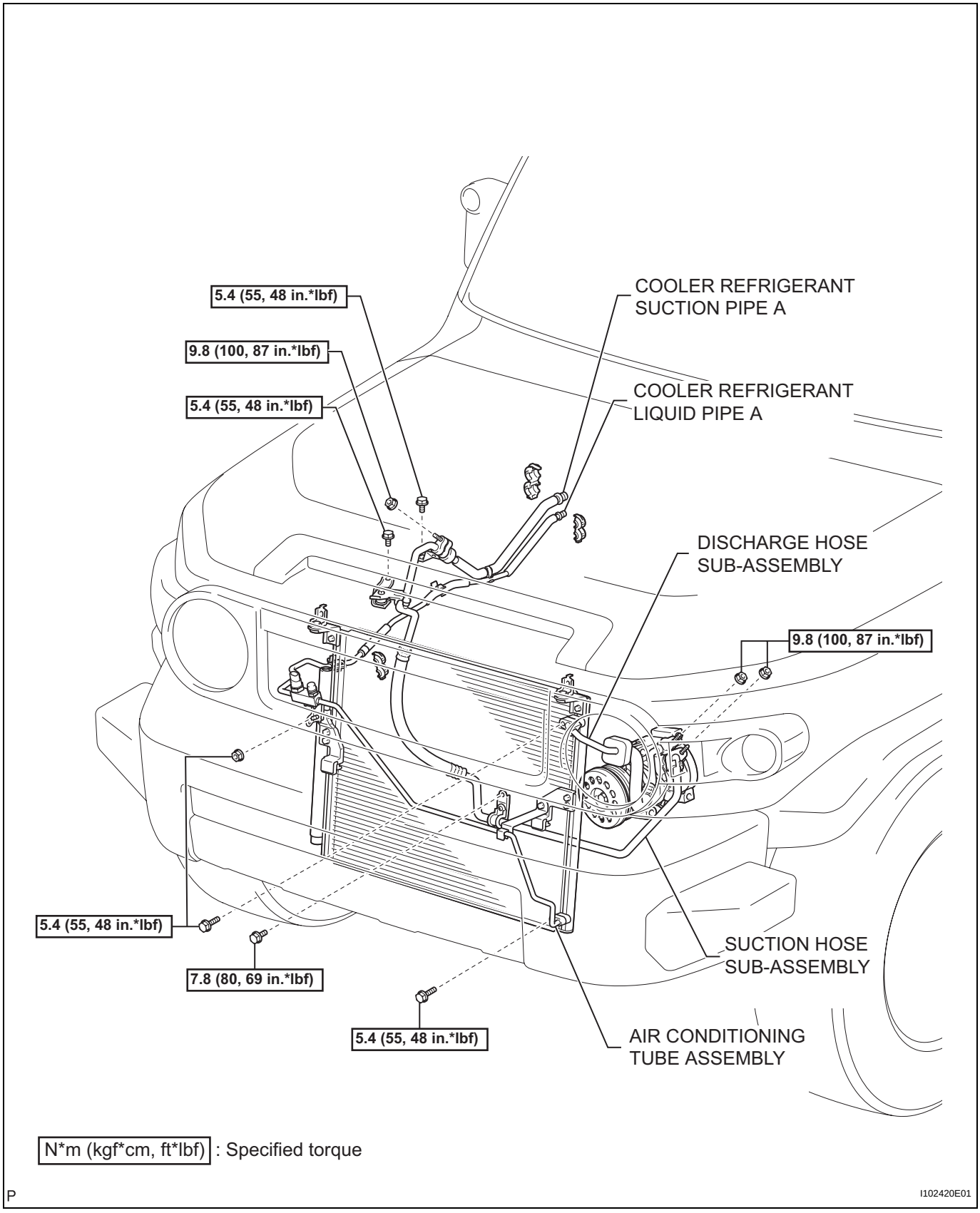

AIR CONDITIONING UNIT

COMPONENTS

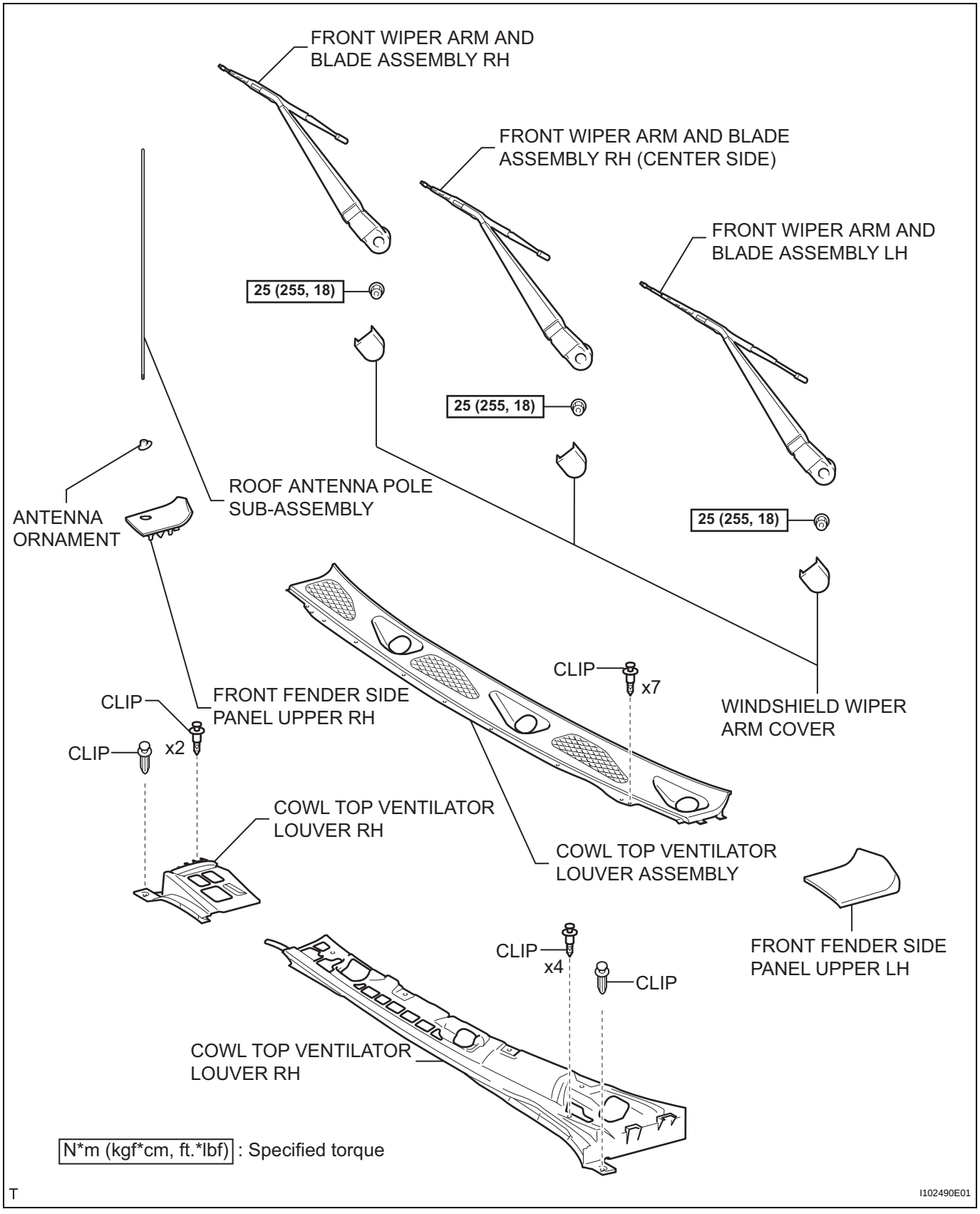

AC

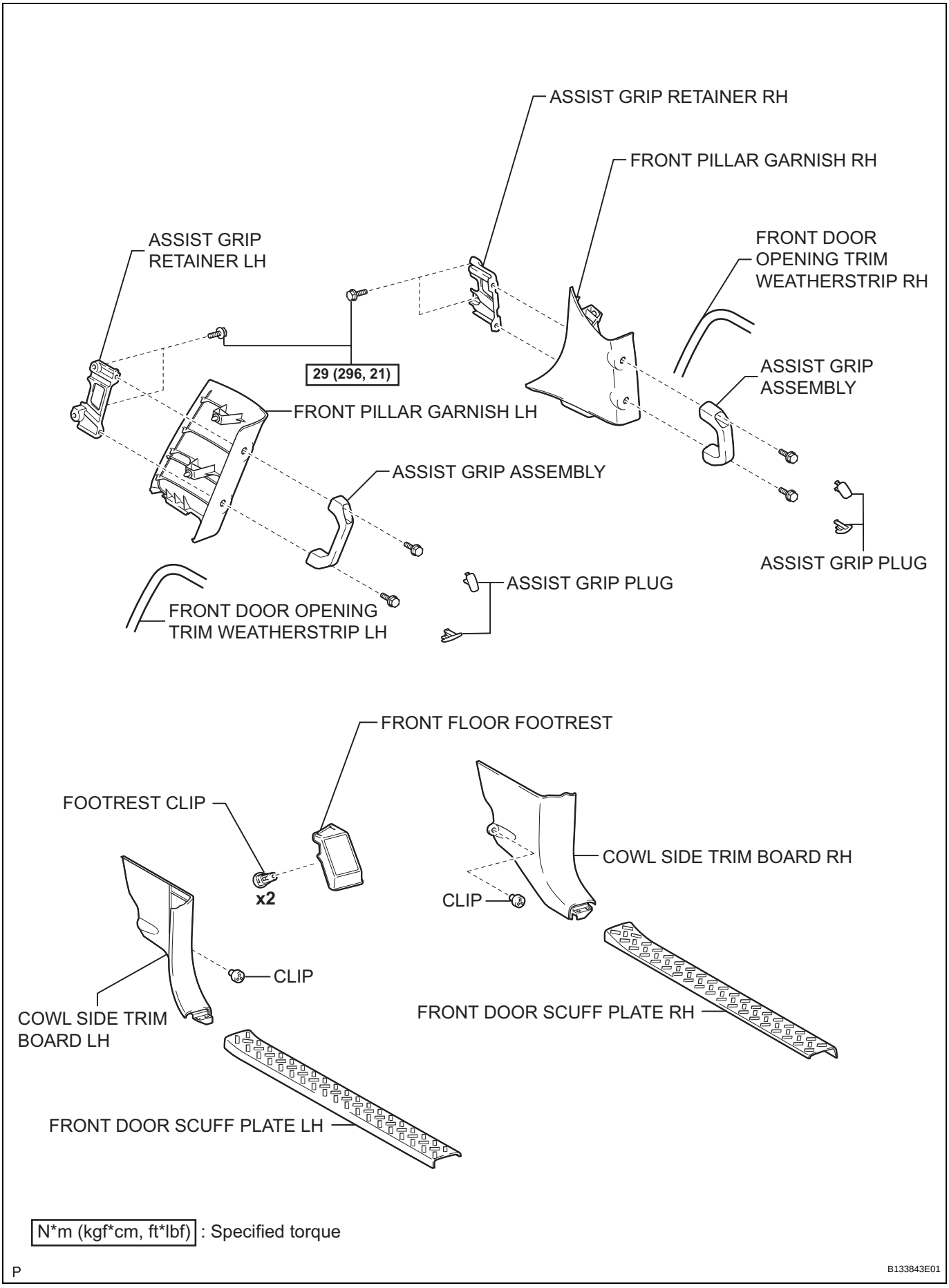

N*m (kgf*cm, ft*lbf) : Specified torque

P

B133843E01

for Automatic Transmission 2WD:

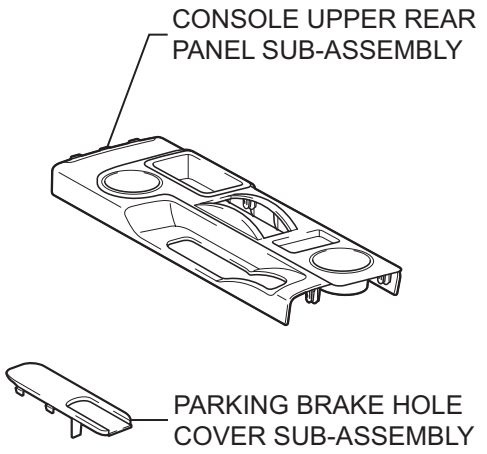

for Manual Transmission 4WD:

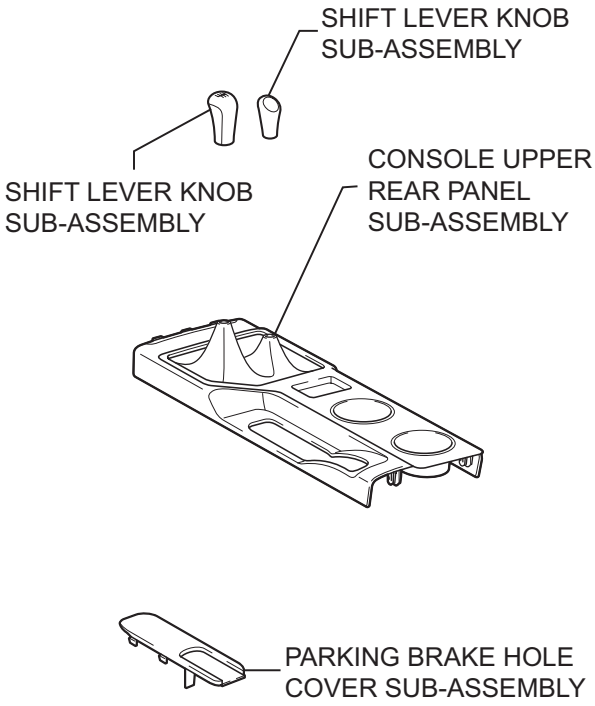

for Automatic Transmission 4WD:

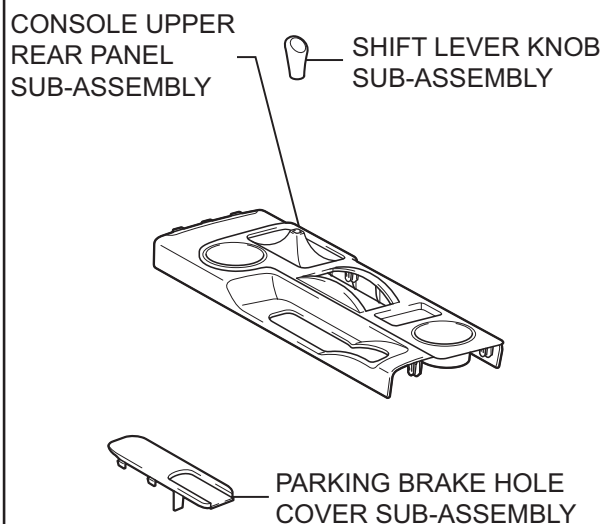

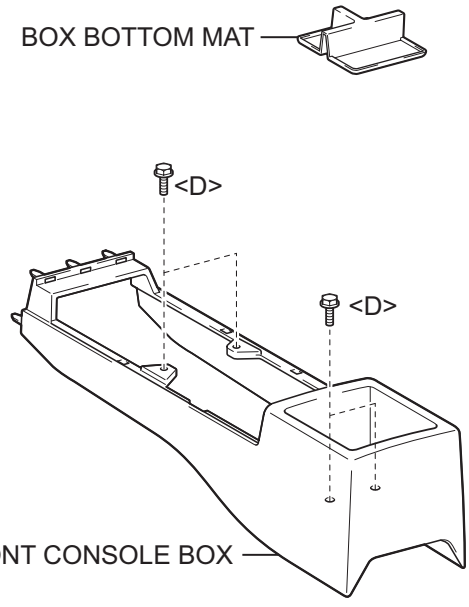

AC

P

B133844E01

AC

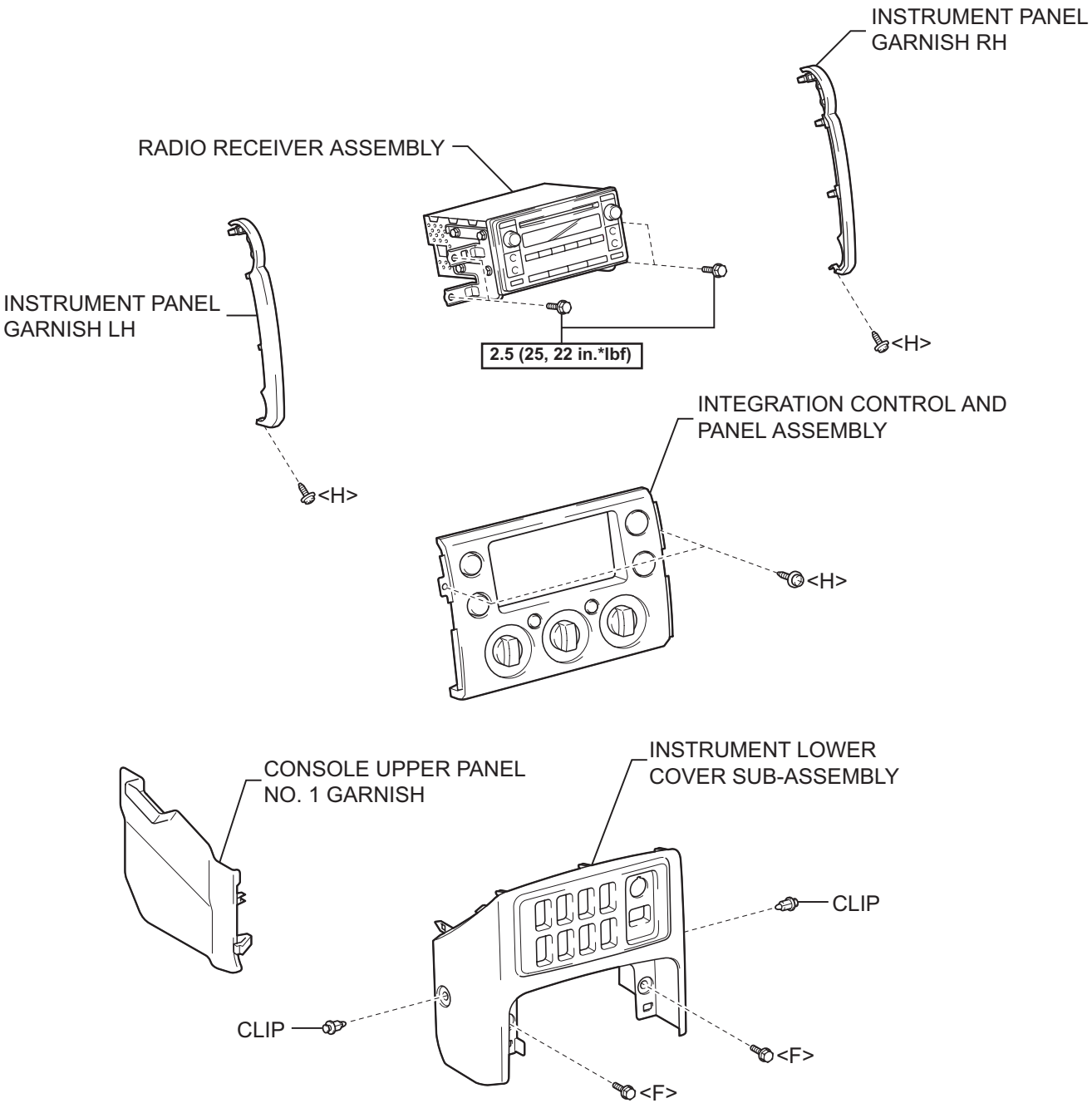

N*m (kgf*cm, ft*lbf) : Specified torque

P

B133845E01

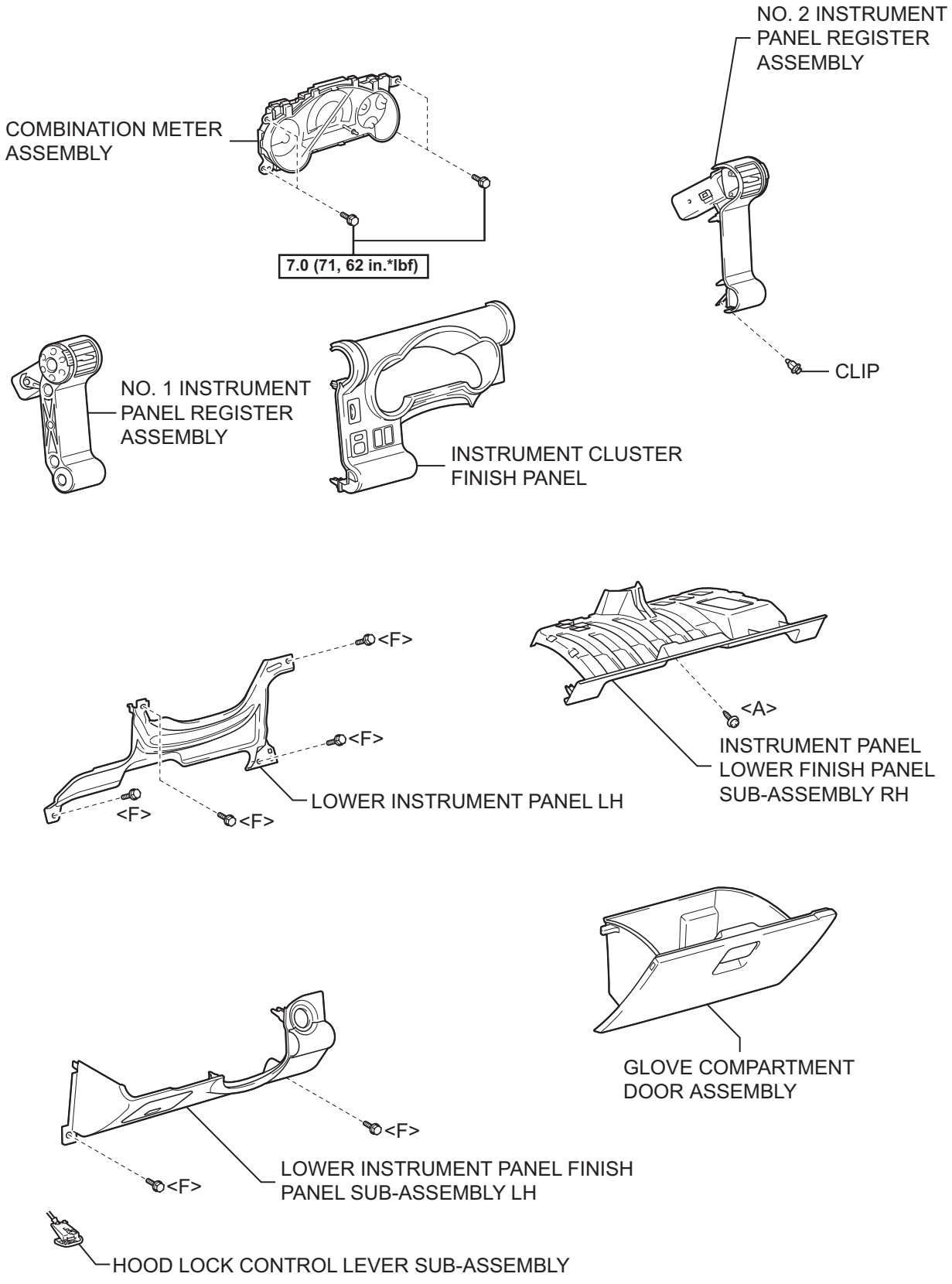

N*m (kgf*cm, ft.*lbf) : Specified torque

P

B133846E01

AC

AC

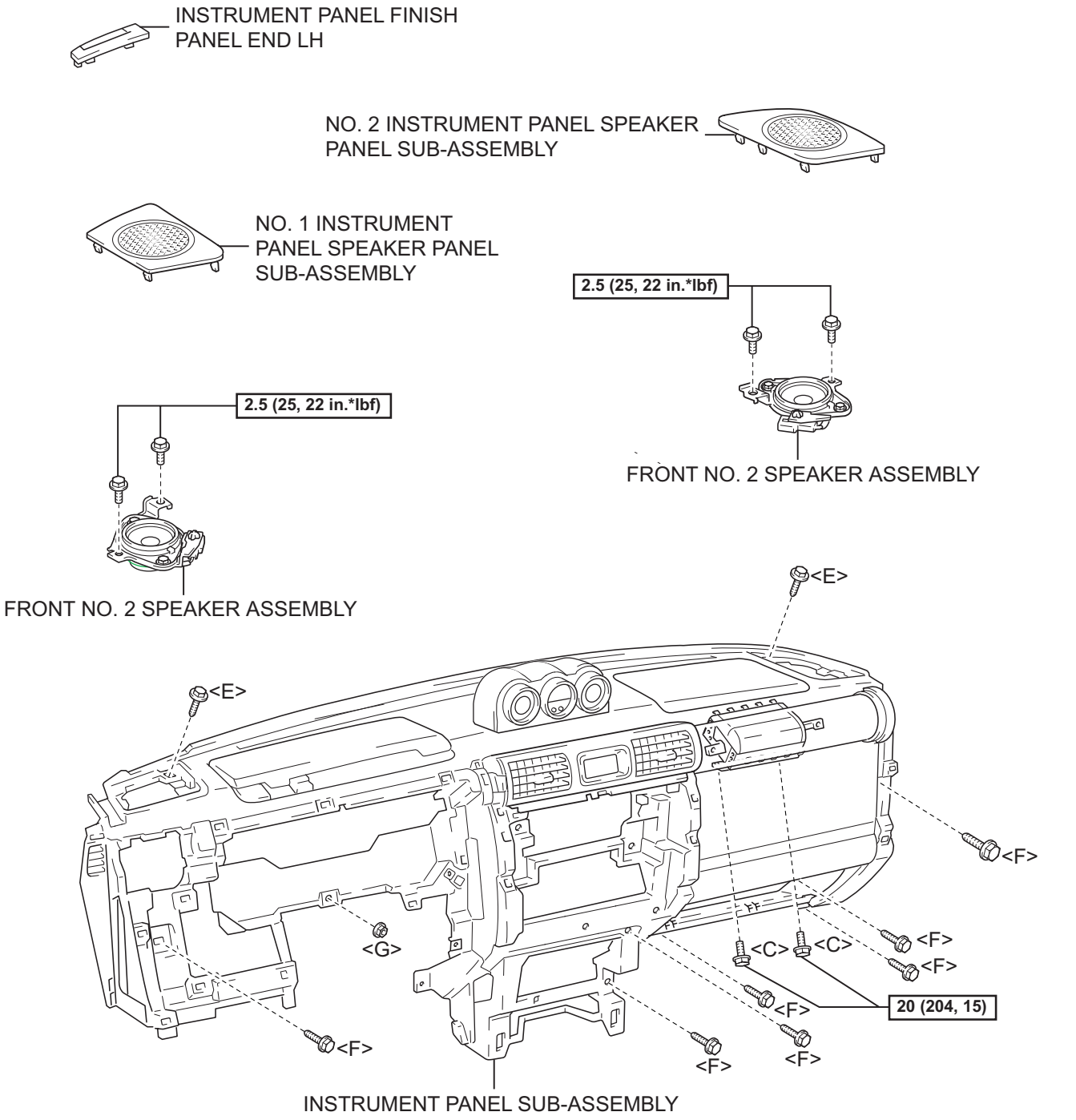

N*m (kgf*cm, ft*lbf) : Specified torque

P

B133847E01

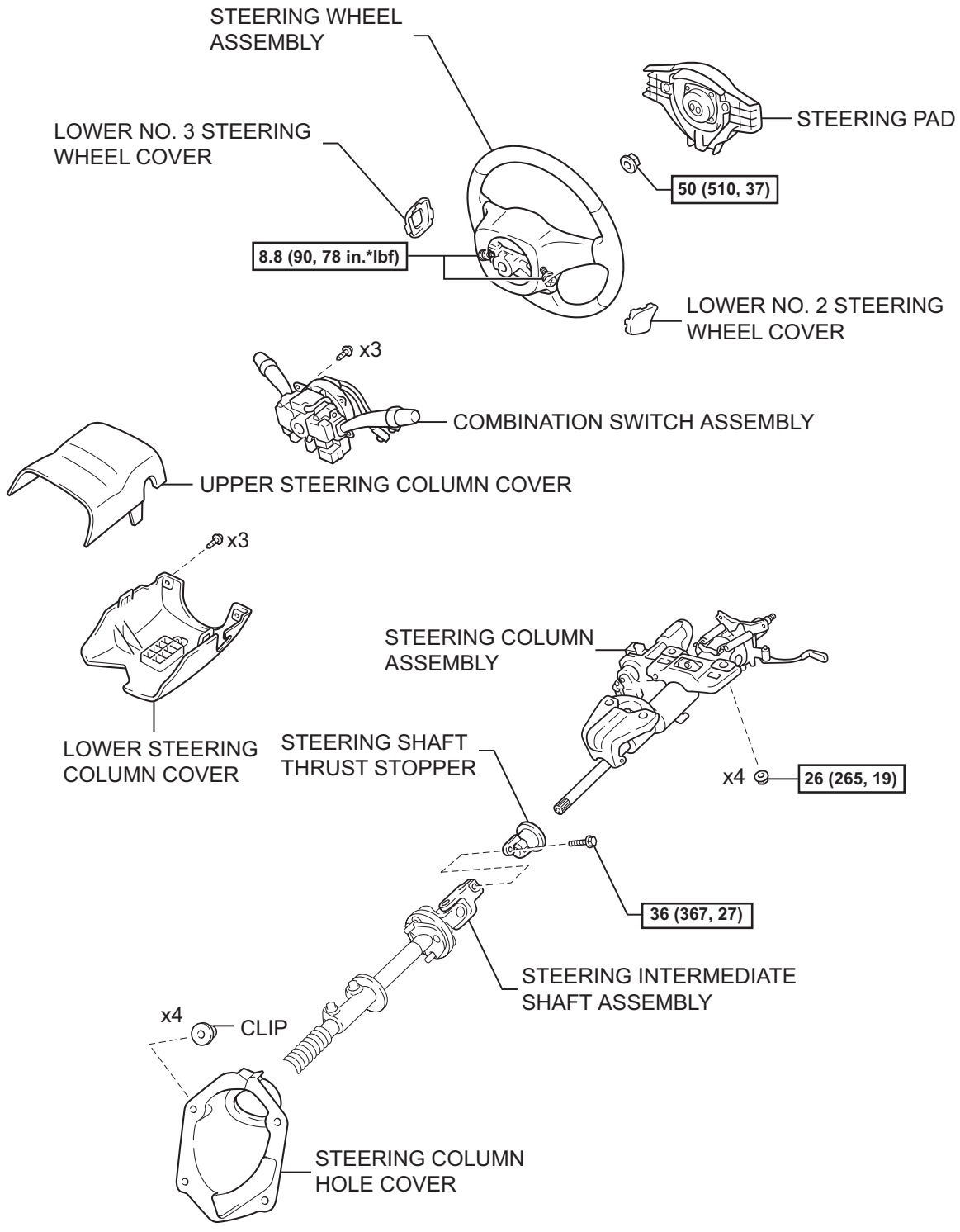

N*m (kgf*cm, ft.*lbf) : Specified torque

N

I102501E01

AC

AC

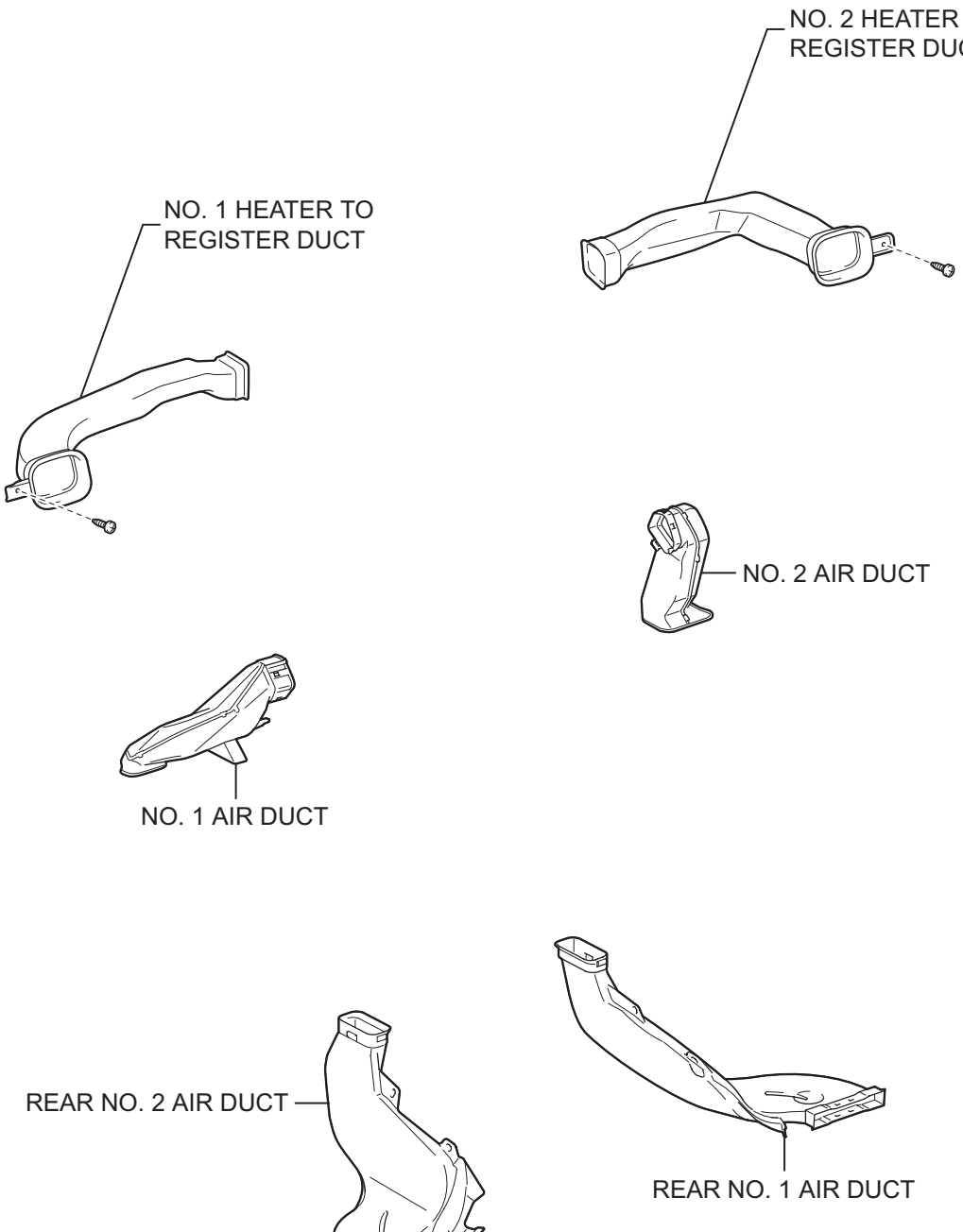

P

I102421E01

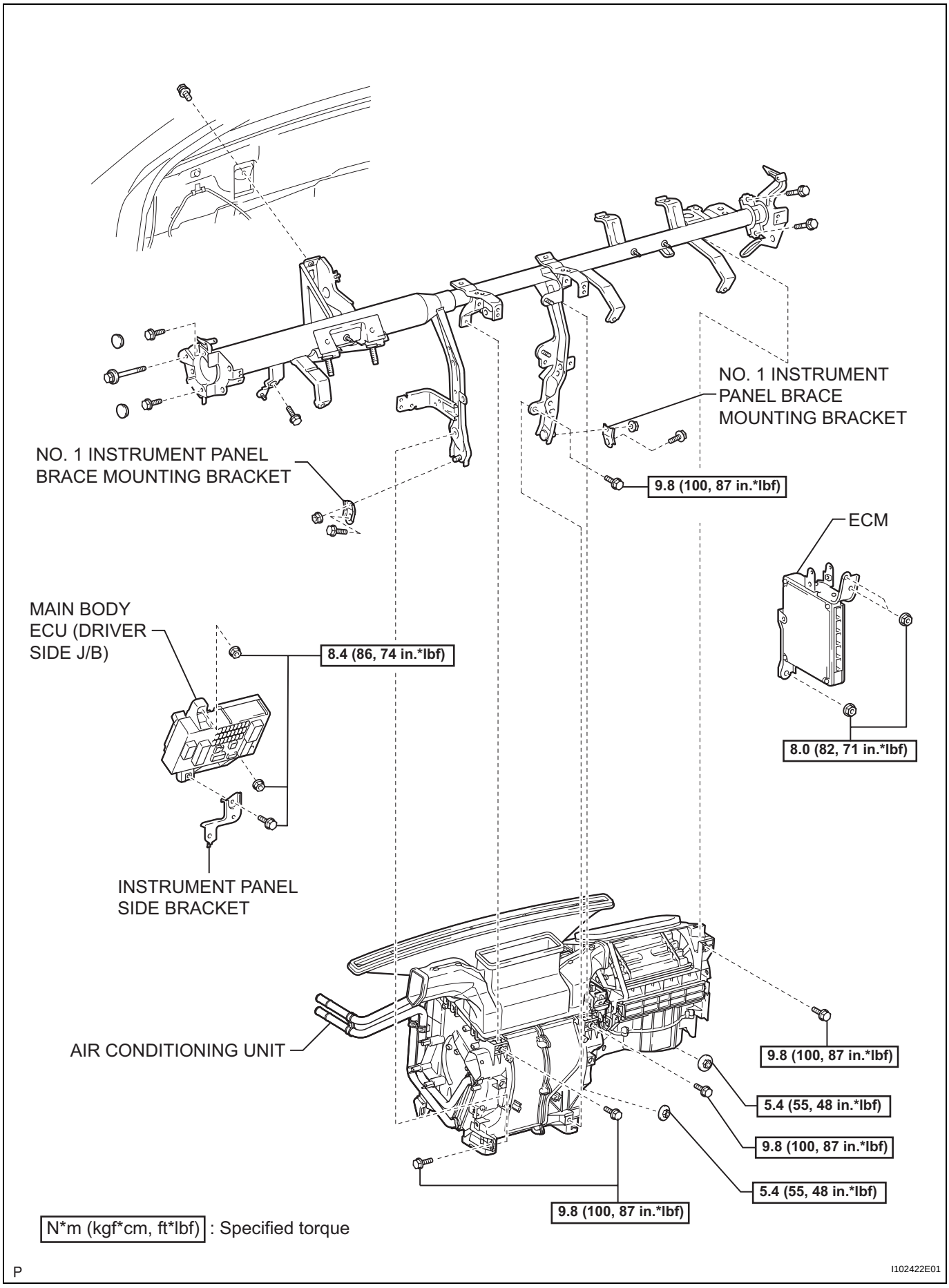
NO. 1 INSTRUMENT PANEL BRACE MOUNTING BRACKET
NO. 1 INSTRUMENT PANEL BRACE MOUNTING BRACKET
9.8 (100, 87 in.*lbf)
ECM
MAIN BODY ECU (DRIVER SIDE J/B)
8.4 (86, 74 in.*lbf)
8.0 (82, 71 in.*lbf)
INSTRUMENT PANEL SIDE BRACKET
AIR CONDITIONING UNIT
9.8 (100, 87 in.*lbf)
5.4 (55, 48 in.*lbf)
9.8 (100, 87 in.*lbf)
5.4 (55, 48 in.*lbf)
9.8 (100, 87 in.*lbf)
N*m (kgf*cm, ft*lbf) : Specified torque
P
I102422E01

AC

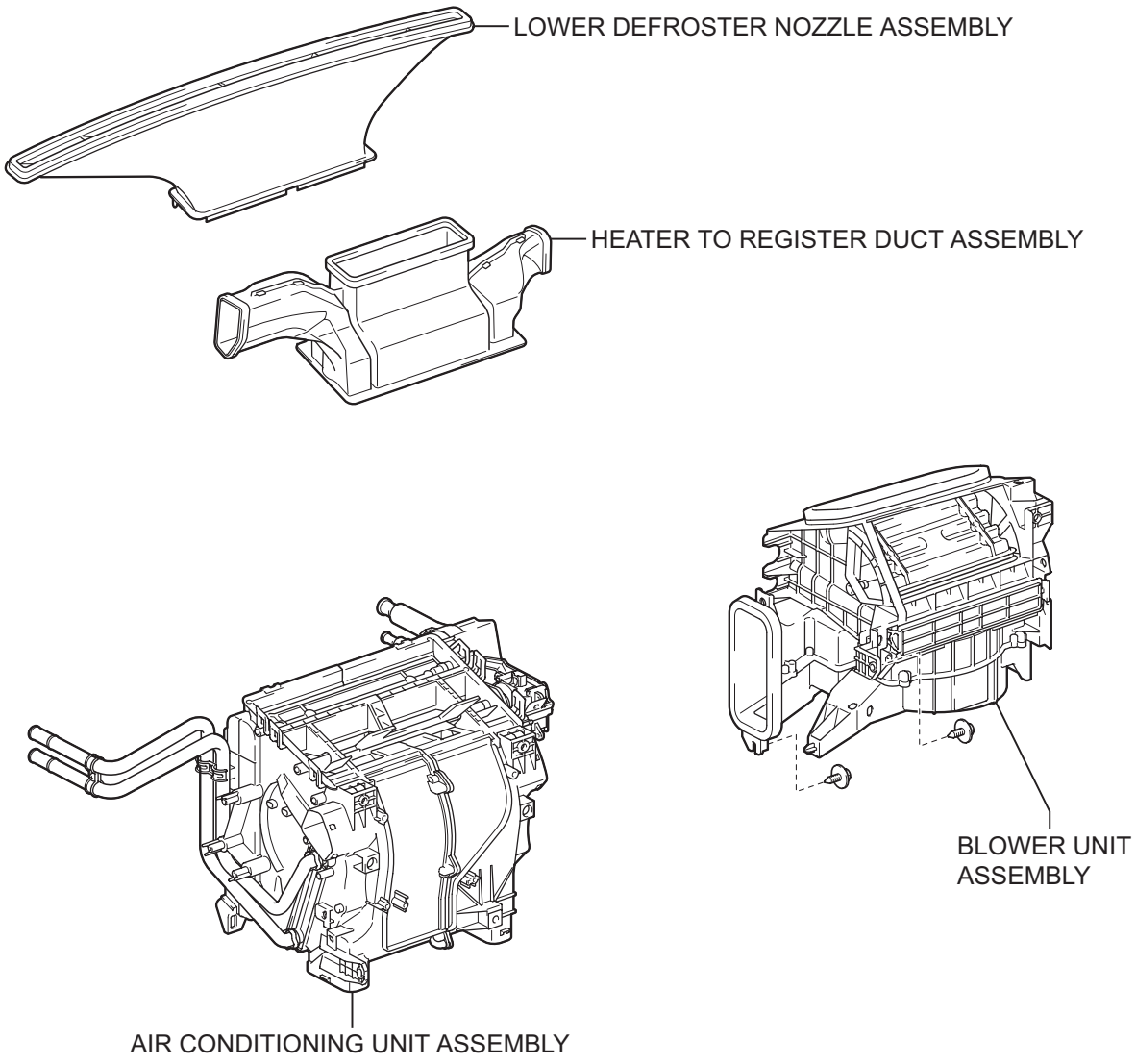

P

I102423E01

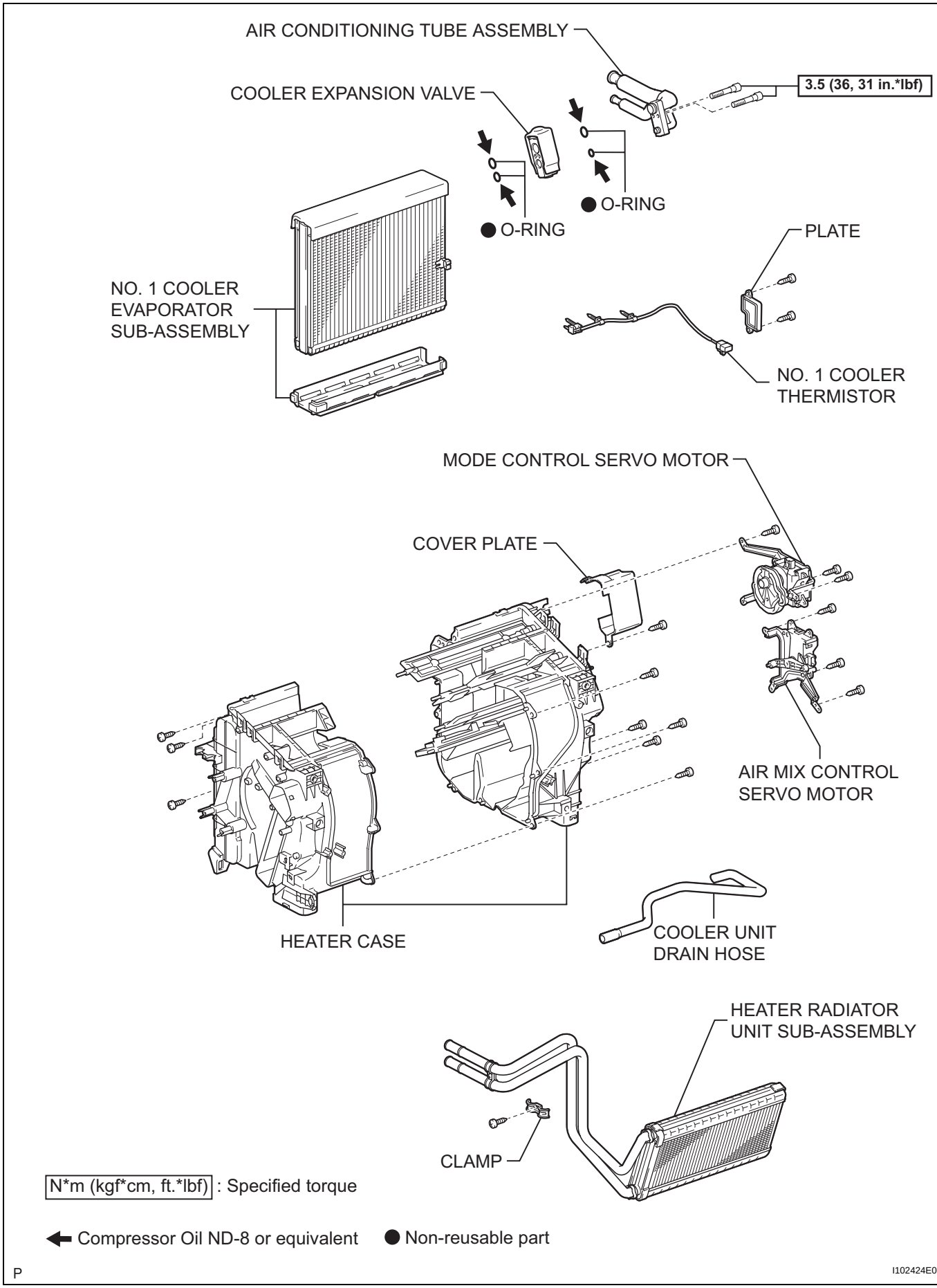
AIR CONDITIONING TUBE ASSEMBLY
COOLER EXPANSION VALVE
3.5 (36, 31 in.*lbf)
O-RING
O-RING
PLATE
NO. 1 COOLER EVAPORATOR SUB-ASSEMBLY
NO. 1 COOLER THERMISTOR
MODE CONTROL SERVO MOTOR
COVER PLATE
AIR MIX CONTROL SERVO MOTOR
HEATER CASE
COOLER UNIT DRAIN HOSE
HEATER RADIATOR UNIT SUB-ASSEMBLY
CLAMP
N*m (kgf*cm, ft.*lbf) : Specified torque
Compressor Oil ND-8 or equivalent
Non-reusable part
P
I102424E01

AC

AC

REMOVAL

CAUTION:
Some of these service operations affect the SRS airbag system. Read the precautionary notices concerning the SRS airbag system before servicing (See page RS-1).
HINT:
Use the same procedure for both the RH and LH sides.

1. **BOLTS, SCREWS AND NUTS TABLE (See page IP-9)**
2. **DISCONNECT CABLE FROM NEGATIVE BATTERY TERMINAL**
   Wait for at least 90 seconds after disconnecting the cable to prevent the airbag from working.
3. **DISCHARGE REFRIGERANT FROM REFRIGERATION SYSTEM (See page AC-16)**
4. **DRAIN ENGINE COOLANT (See page CO-3)**
5. **REMOVE ROOF ANTENNA POLE SUB-ASSEMBLY (See page AV-116)**
6. **REMOVE WINDSHIELD WIPER ARM COVER (See page WW-25)**
7. **REMOVE FRONT WIPER ARM AND BLADE ASSEMBLY LH (See page WW-26)**
8. **REMOVE FRONT WIPER ARM AND BLADE ASSEMBLY RH (CENTER SIDE) (See page WW-26)**
9. **REMOVE FRONT WIPER ARM AND BLADE ASSEMBLY RH (See page WW-26)**
10. **REMOVE FRONT FENDER SIDE PANEL UPPER LH (See page WW-26)**
11. **REMOVE ANTENNA ORNAMENT (See page WW-26)**
12. **REMOVE FRONT FENDER SIDE PANEL UPPER RH (See page WW-26)**
13. **REMOVE COWL TOP VENTILATOR LOUVER ASSEMBLY (See page WW-27)**
14. **REMOVE COWL TOP VENTILATOR LOUVER RH (See page WW-27)**
15. **REMOVE COWL TOP VENTILATOR LOUVER LH (See page WW-27)**
16. **DISCONNECT COOLER REFRIGERANT SUCTION PIPE A**
    (a) Install SST onto the piping clamp.
    SST 09870-00015
    HINT:
    Check the directions of the piping clamp and SST by referring to the illustration on the caution label.
    (b) Push down SST and release the clamp lock.
    NOTICE:
    Do not deform the tube when pushing SST.

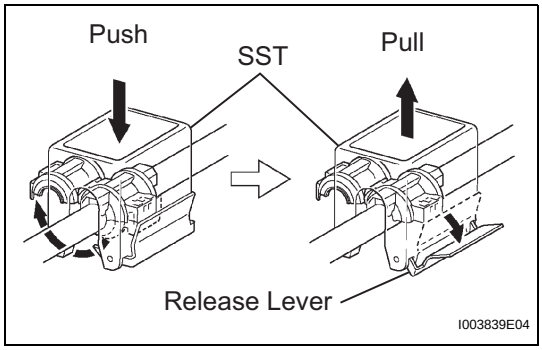

(c) Pull SST slightly, push the release lever, and then remove the piping clamp with SST.
(d) Disconnect the suction pipe.
NOTICE:
- **Do not use any tools when disconnecting the pipe.**
- **Seal the openings of the disconnected parts using vinyl tape to prevent moisture and foreign matter from entering.**

17. DISCONNECT COOLER REFRIGERANT LIQUID PIPE A
SST 09870-00025
HINT:
Disconnection procedure of the liquid pipe is the same as for the suction pipe.

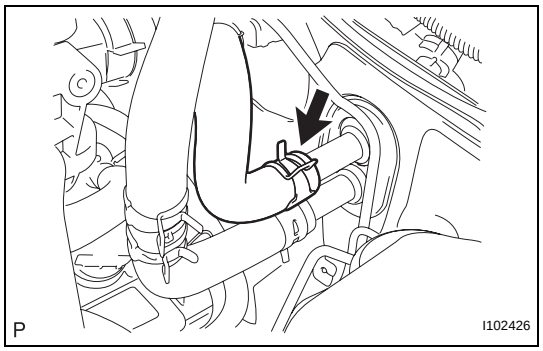

18. DISCONNECT HEATER INLET WATER HOSE
(a) Using pliers, grip the claw of the clip, slide the clip and disconnect the heater water inlet hose from the heater unit.

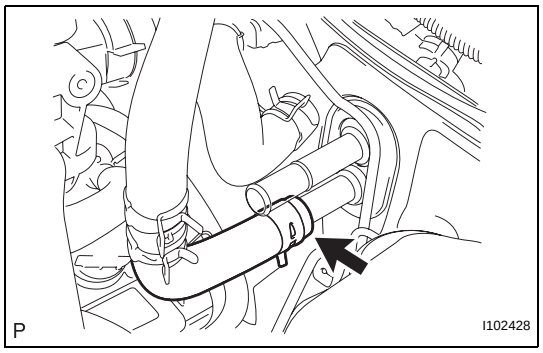

19. DISCONNECT HEATER WATER OUTLET HOSE A (FROM HEATER UNIT)
(a) Using pliers, grip the claw of the clip, slide the clip and disconnect the heater water outlet hose from the heater unit.

20. POSITION FRONT WHEELS FACING STRAIGHT AHEAD

21. REMOVE LOWER NO. 3 STEERING WHEEL COVER (See page RS-345)

22. REMOVE LOWER NO. 2 STEERING WHEEL COVER (See page RS-345)

23. REMOVE STEERING PAD (See page RS-346)

24. REMOVE STEERING WHEEL ASSEMBLY (See page SR-8)

25. REMOVE LOWER STEERING COLUMN COVER (See page SR-8)

26. REMOVE UPPER STEERING COLUMN COVER (See page SR-8)

27. REMOVE COMBINATION SWITCH ASSEMBLY (See page SR-9)

28. REMOVE FRONT DOOR SCUFF PLATE RH (See page IR-15)

29. REMOVE FRONT DOOR SCUFF PLATE LH (See page IR-15)
30. REMOVE FRONT FLOOR FOOTREST (See page IR-2)
31. REMOVE FOOTREST CLIP (See page IR-2)
32. REMOVE COWL SIDE TRIM BOARD RH (See page IR-15)
33. REMOVE COWL SIDE TRIM BOARD LH (See page IR-15)
34. REMOVE FRONT DOOR OPENING TRIM WEATHERSTRIP RH (See page IP-10)
35. REMOVE FRONT DOOR OPENING TRIM WEATHERSTRIP RH (See page IP-10)
36. REMOVE ASSIST GRIP PLUG (See page IR-17)
37. REMOVE ASSIST GRIP ASSEMBLY (See page IR-17)
38. REMOVE FRONT PILLAR GARNISH RH (See page IR-18)
39. REMOVE FRONT PILLAR GARNISH LH (See page IR-18)
40. REMOVE INSTRUMENT PANEL GARNISH LH (See page IP-10)
41. REMOVE INSTRUMENT PANEL GARNISH RH (See page IP-10)
42. REMOVE INTEGRATION CONTROL AND PANEL ASSEMBLY (See page IP-11)
43. REMOVE RADIO RECEIVER ASSEMBLY (See page AV-55)
44. REMOVE PARKING BRAKE HOLE COVER SUB-ASSEMBLY (See page IP-11)
45. REMOVE SHIFT LEVER KNOB SUB-ASSEMBLY (for Manual Transmission) (See page IP-11)
46. REMOVE SHIFT LEVER KNOB SUB-ASSEMBLY (for 4WD) (See page IP-11)
47. REMOVE CONSOLE UPPER REAR PANEL SUB-ASSEMBLY (See page IP-12)
48. REMOVE BOX BOTTOM MAT (See page IP-12)
49. REMOVE FRONT CONSOLE BOX (See page IP-12)
50. REMOVE CONSOLE UPPER PANEL NO. 1 GARNISH (See page IP-10)
51. REMOVE INSTRUMENT LOWER COVER SUB-ASSEMBLY (See page IP-13)
52. REMOVE NO. 1 INSTRUMENT PANEL REGISTER ASSEMBLY (See page IP-13)

53. **SEPARATE HOOD LOCK CONTROL LEVER SUB-ASSEMBLY (See page IP-13)**

54. **REMOVE LOWER INSTRUMENT PANEL FINISH PANEL SUB-ASSEMBLY LH (See page IP-14)**

55. **REMOVE LOWER INSTRUMENT PANEL LH (See page IP-14)**

56. **REMOVE INSTRUMENT CLUSTER FINISH PANEL (See page IP-14)**

57. **REMOVE COMBINATION METER ASSEMBLY (See page IP-14)**

58. **REMOVE GLOVE COMPARTMENT DOOR ASSEMBLY (See page IP-15)**

59. **REMOVE INSTRUMENT PANEL LOWER FINISH PANEL SUB-ASSEMBLY RH (See page IP-15)**

60. **REMOVE NO. 2 INSTRUMENT PANEL REGISTER ASSEMBLY (See page IP-16)**

61. **REMOVE NO. 2 INSTRUMENT PANEL SPEAKER PANEL SUB-ASSEMBLY (See page IP-16)**

62. **REMOVE NO. 1 INSTRUMENT PANEL SPEAKER PANEL SUB-ASSEMBLY (See page IP-16)**

63. **REMOVE FRONT NO. 2 SPEAKER ASSEMBLY (See page AV-62)**

64. **REMOVE ASSIST GRIP RETAINER RH (See page IP-16)**

65. **REMOVE ASSIST GRIP RETAINER LH (See page IP-16)**

66. **DISCONNECT PASSENGER AIRBAG CONNECTOR (See page IP-16)**

67. **REMOVE INSTRUMENT PANEL SUB-ASSEMBLY (See page IP-16)**

68. **REMOVE INSTRUMENT PANEL FINISH PANEL END LH (See page IP-21)**

69. **REMOVE NO. 1 HEATER TO REGISTER DUCT**
    (a) Remove the screw and remove the heater to register duct.

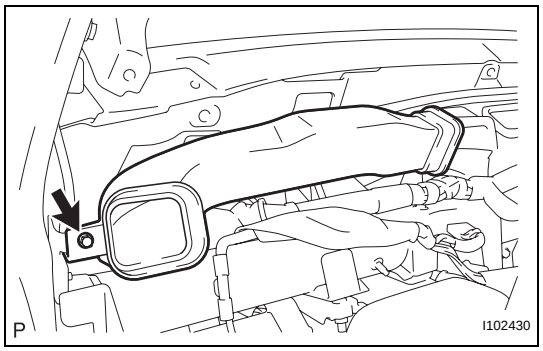

AC

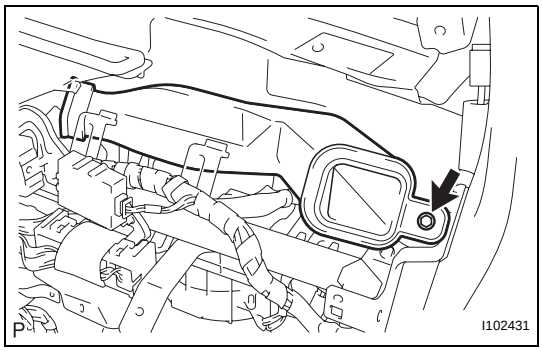

70. REMOVE NO. 2 HEATER TO REGISTER DUCT

(a) Remove the screw and remove the heater to register duct.

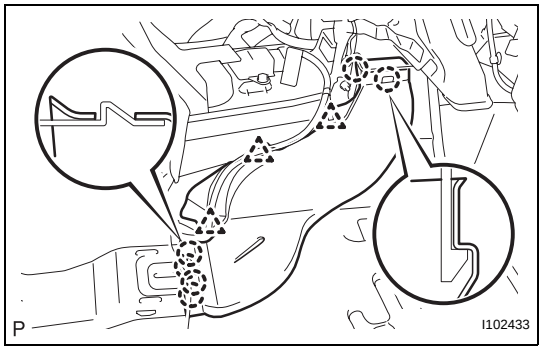

71. REMOVE REAR NO. 1 AIR DUCT

(a) Disengage the 6 claws and 3 clamps and remove the rear air duct.

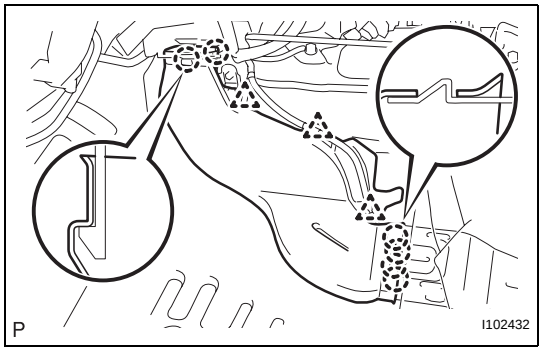

72. REMOVE REAR NO. 2 AIR DUCT

(a) Disengage the 6 claws and 3 clamps and remove the rear air duct.

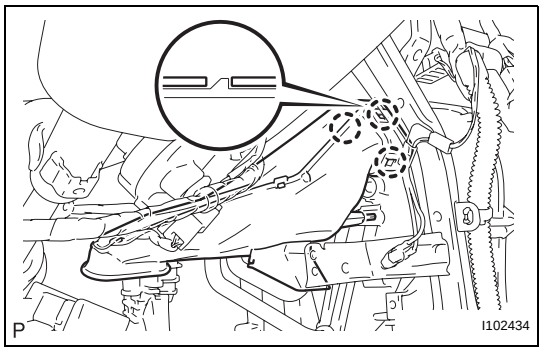

73. REMOVE NO. 1 AIR DUCT

(a) Disengage the 3 claws and remove the air duct.

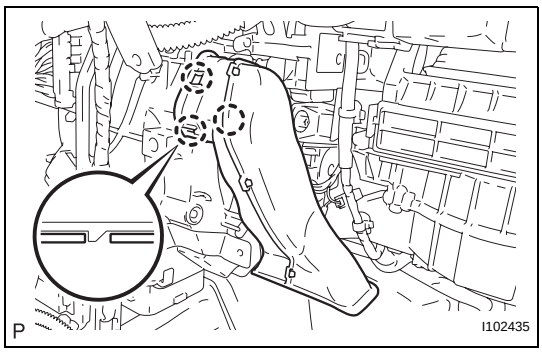

74. REMOVE NO. 2 AIR DUCT

(a) Disengage the 3 claws and remove the air duct.

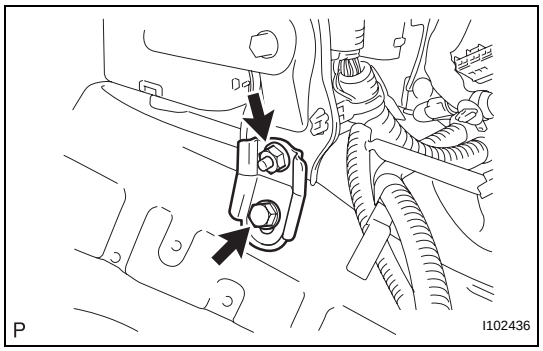

75. REMOVE NO. 1 INSTRUMENT PANEL BRACE MOUNTING BRACKET

(a) for LH side:

(1) Remove the bolt and nut and remove the instrument panel brace mounting bracket.

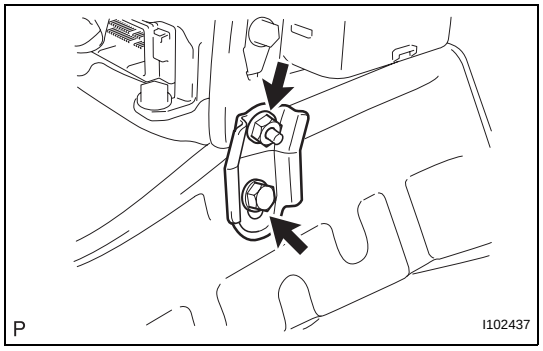

(b) for RH side:

(1) Remove the bolt and nut and remove the instrument panel brace mounting bracket.

76. REMOVE ECM (See page ES-446)

77. REMOVE STEERING COLUMN HOLE COVER (See page SR-9)

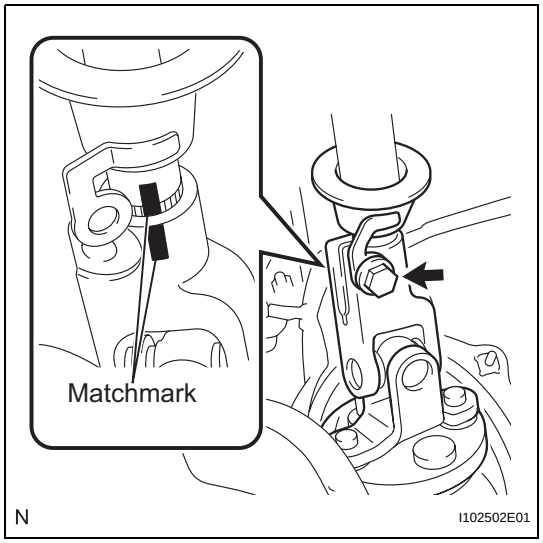

78. SEPARATE STEERING INTERMEDIATE SHAFT ASSEMBLY

(a) Remove the bolt and separate the steering shaft thrust stopper from the steering intermediate shaft assembly.

(b) Mark matchmarks on the steering column assembly and steering intermediate shaft.

(c) Pull the intermediate shaft assembly and steering shaft thrust stopper out of the steering column assembly.

79. REMOVE STEERING COLUMN ASSEMBLY (See page SR-10)

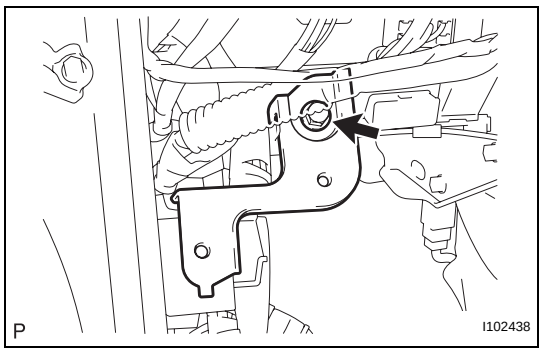

80. REMOVE INSTRUMENT PANEL SIDE BRACKET

(a) Remove the bolt and remove the instrument panel side bracket.

AC

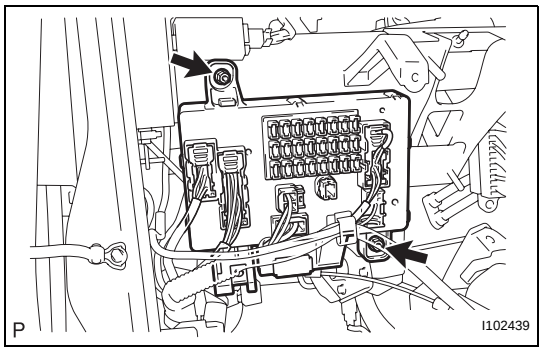

81. SEPARATE MAIN BODY ECU (DRIVER SIDE J/B)

(a) Remove the 2 nuts and remove the driver side junction block.

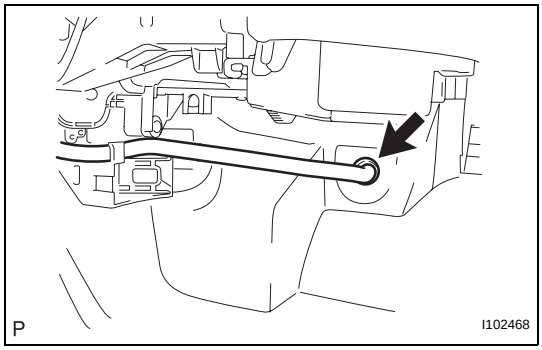

82. REMOVE COOLER UNIT DRAIN HOSE

(a) Disconnect the cooler unit drain hose.

83. REMOVE INSTRUMENT PANEL REINFORCEMENT

(a) Remove the 3 bolts and 5 nuts and disconnect the wire harness.

AC

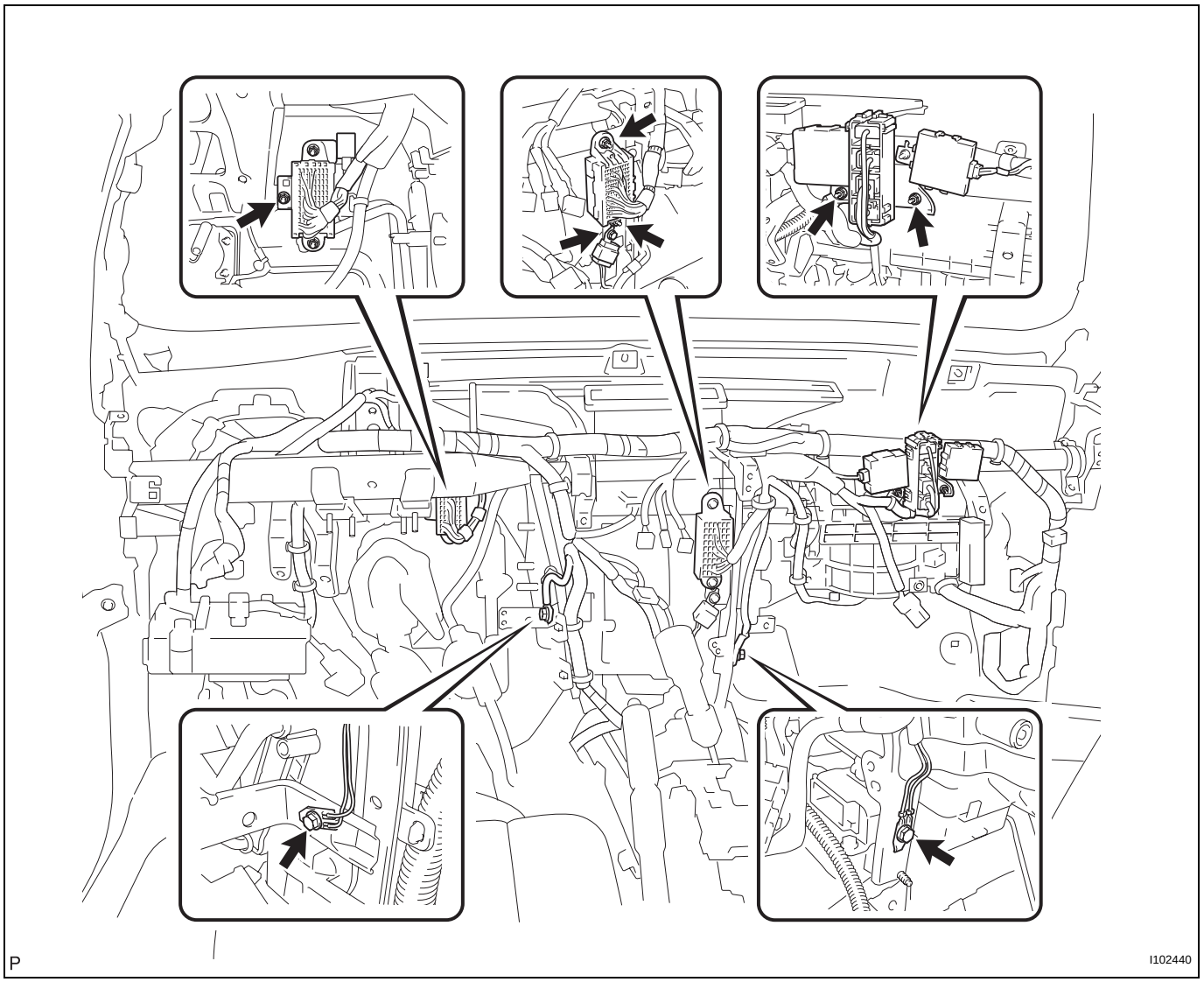

(b) Disconnect the connectors.
(c) Disengage the clamps.

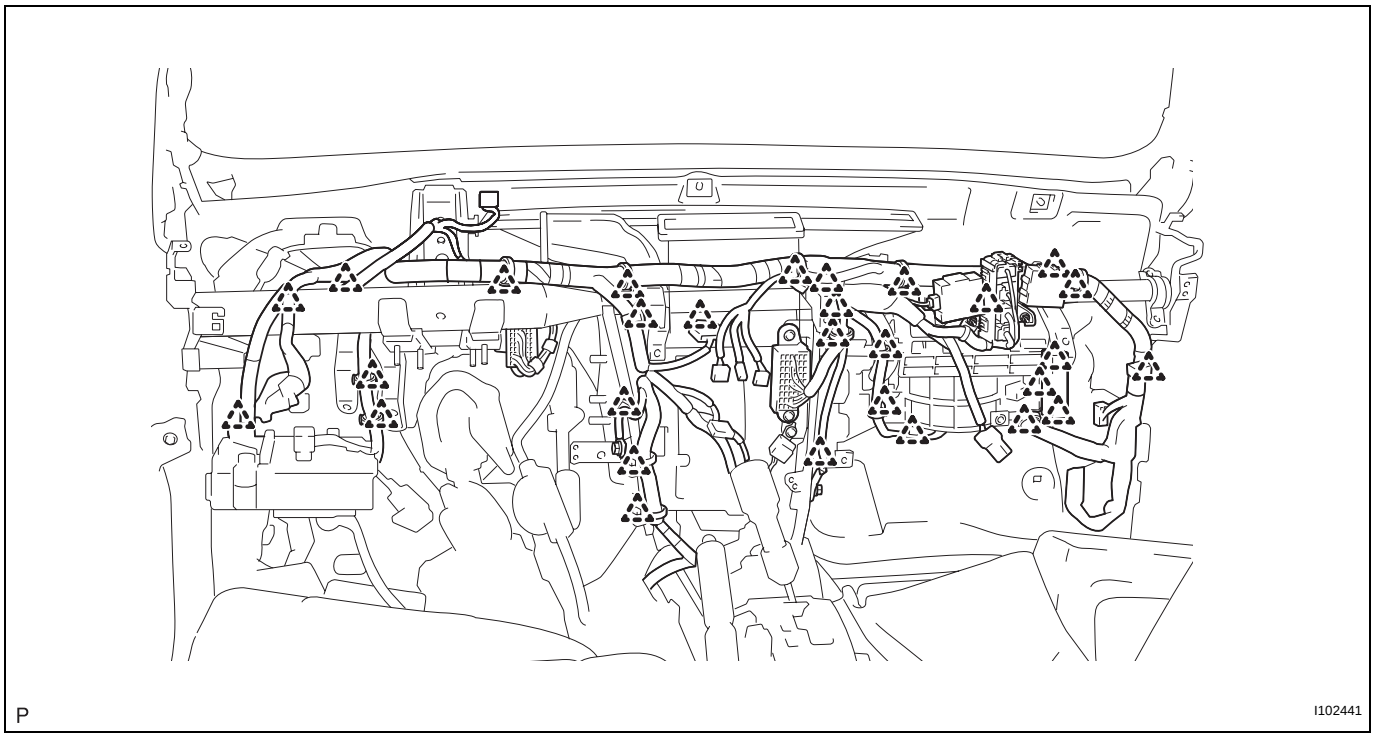

(d) Remove the 5 bolts and the 2 nuts.

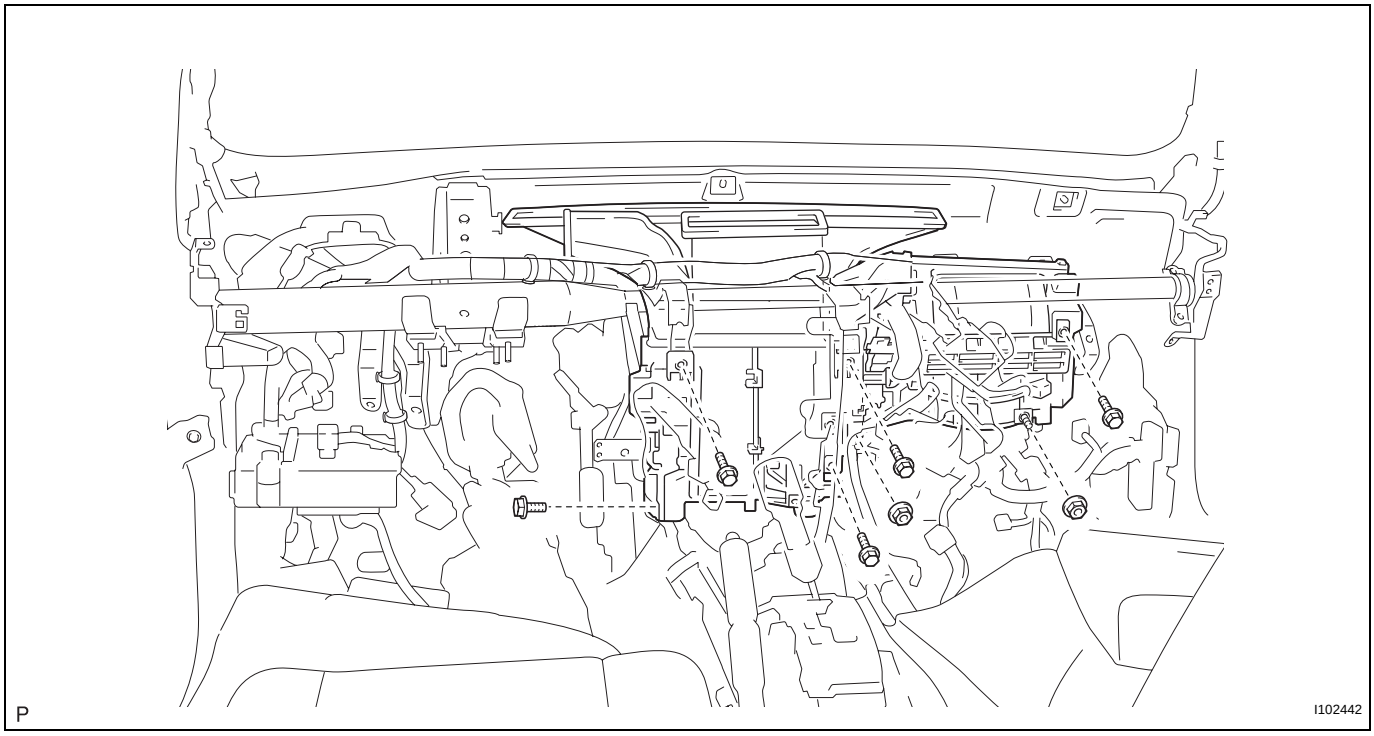

(e) Remove the 2 caps and the 7 bolts.

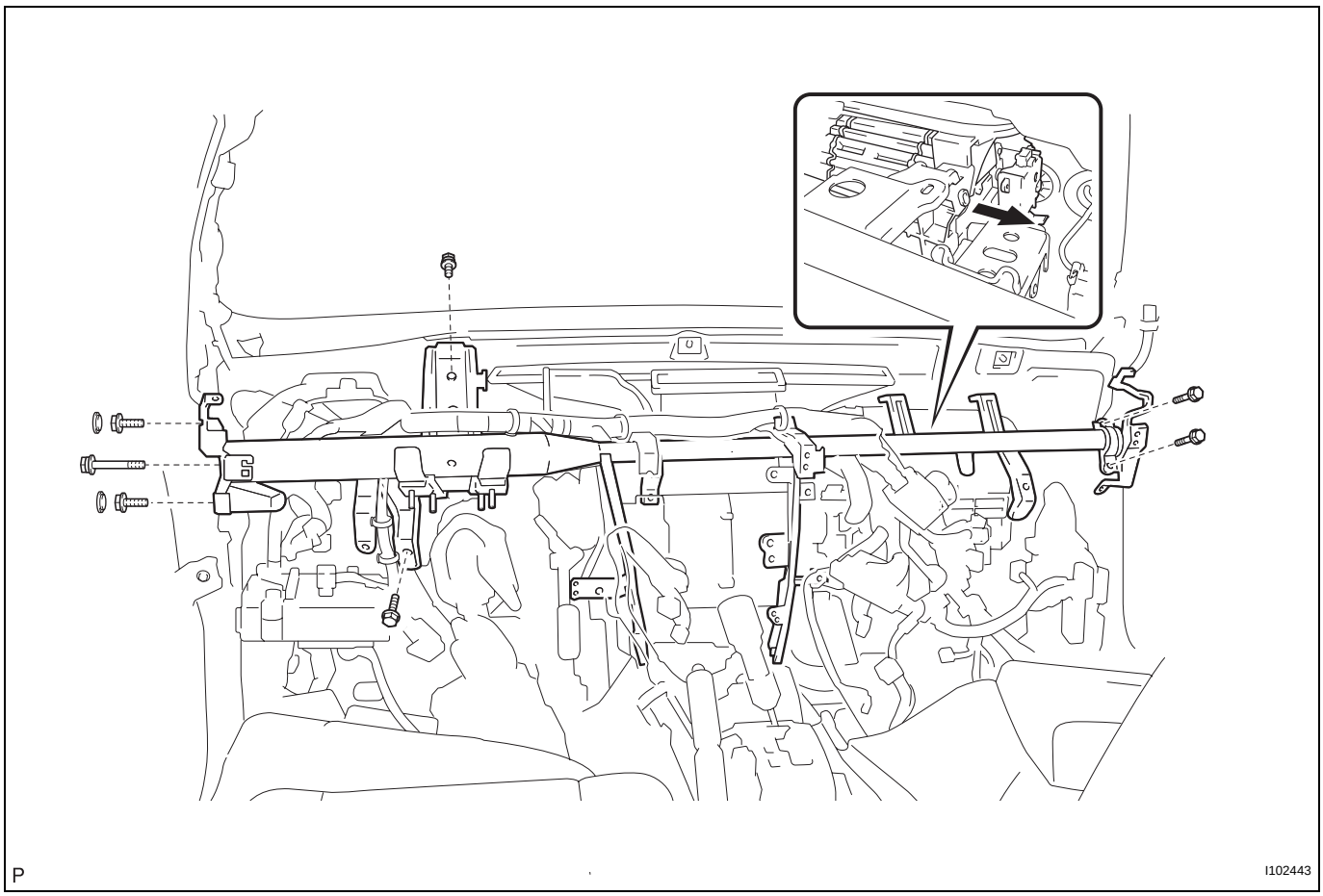

(f) Disengage the reinforcement hook of the air conditioning unit, and remove the reinforcement.
(g) Remove the air conditioning unit.

84. REMOVE AIR CONDITIONING UNIT ASSEMBLY

(a) Remove the 2 screws.
(b) Remove the air conditioning unit as shown in the illustration.

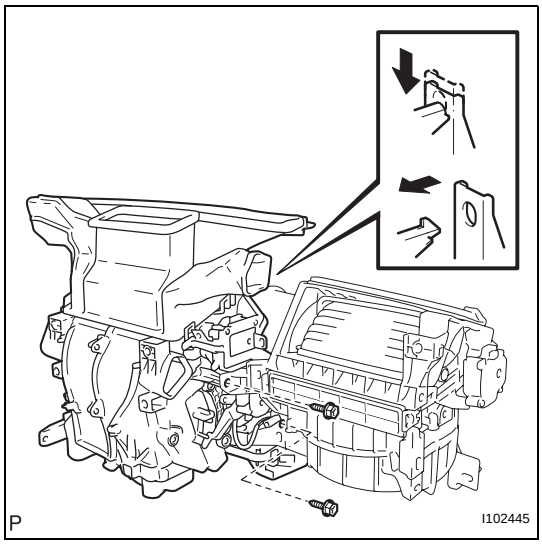

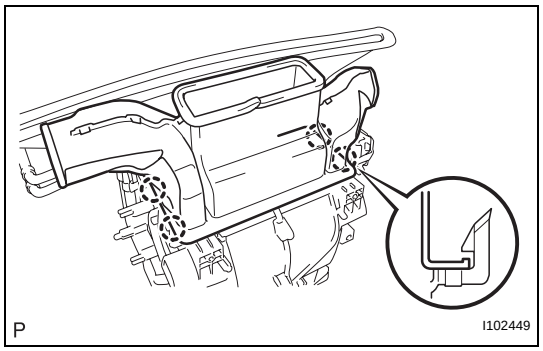

85. REMOVE HEATER TO REGISTER DUCT ASSEMBLY

(a) Disengage the 4 claws and remove the heater to register duct.

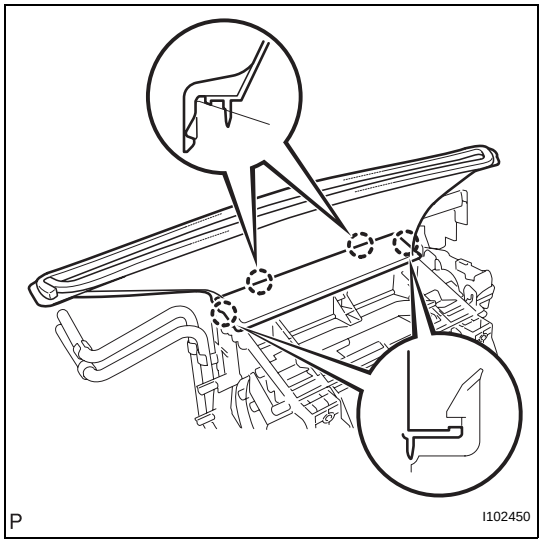

86. REMOVE LOWER DEFROSTER NOZZLE ASSEMBLY

(a) Disengage the 4 claws and remove the lower defroster nozzle.

AC

DISASSEMBLY

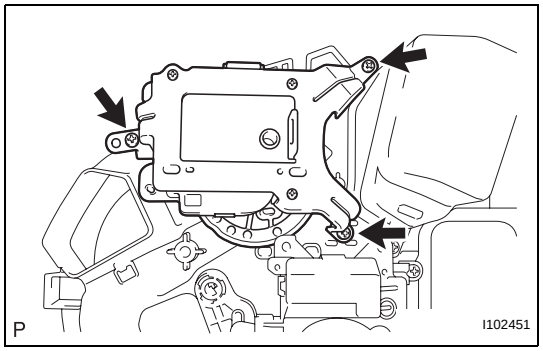

1. REMOVE MODE CONTROL SERVO MOTOR

(a) Remove the 3 screws and remove the mode control servo motor.

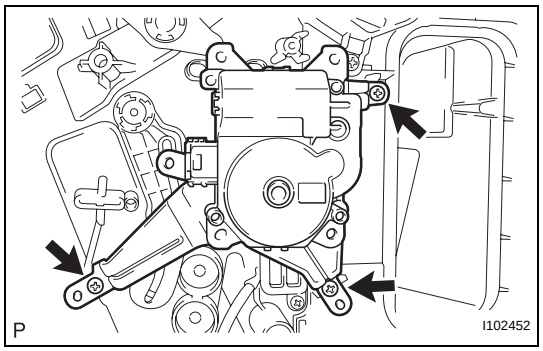

2. REMOVE AIR MIX CONTROL SERVO MOTOR

(a) Remove the 3 screws and remove the air mix control servo motor.

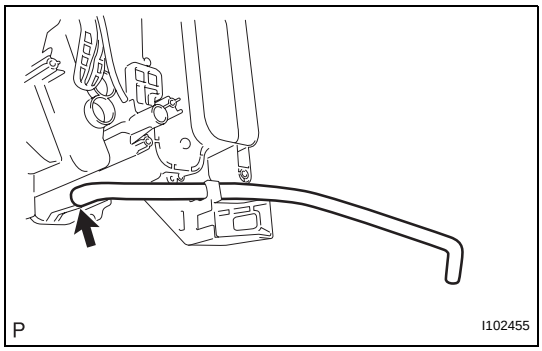

3. REMOVE COOLER UNIT DRAIN HOSE

(a) Remove the cooler unit drain hose.

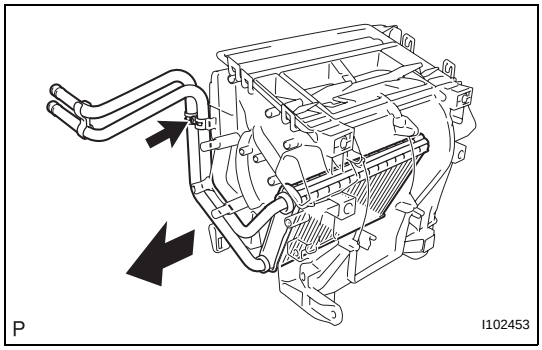

4. REMOVE HEATER RADIATOR UNIT SUB-ASSEMBLY

(a) Remove the screw and clamp.

(b) Remove the heater radiator unit from the heater case.

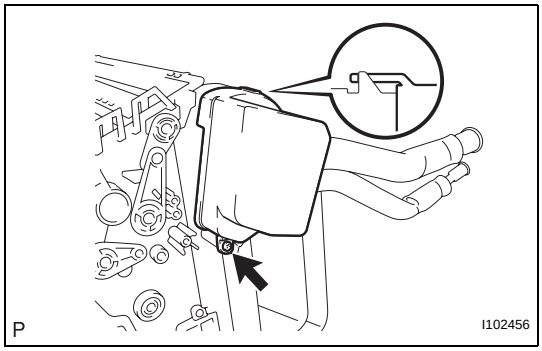

5. REMOVE COVER PLATE

(a) Remove the screw.

(b) Disengage the claw and remove the cover plate.

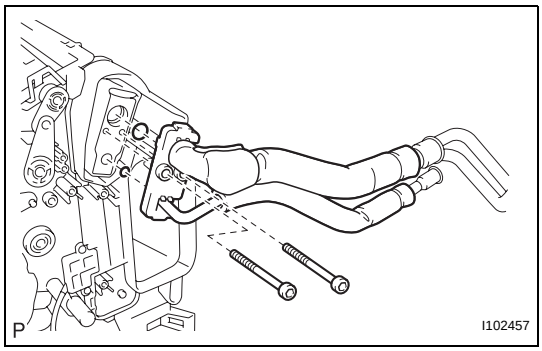

6. REMOVE AIR CONDITIONING TUBE ASSEMBLY

(a) Using a hexagon wrench 4, remove the 2 hexagon bolts and remove the air conditioning tube.

(b) Remove the 2 O-rings from the air conditioning tube.

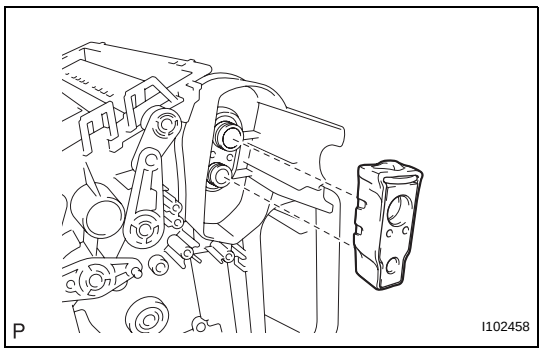

7. REMOVE COOLER EXPANSION VALVE

(a) Remove the cooler expansion valve from the cooler evaporator.

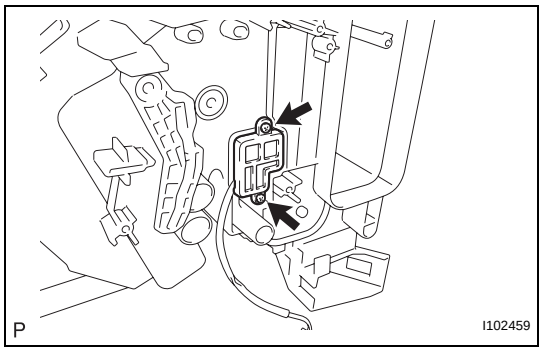

8. REMOVE NO. 1 COOLER EVAPORATOR SUB-ASSEMBLY

(a) Remove the 2 screws and remove the plate.

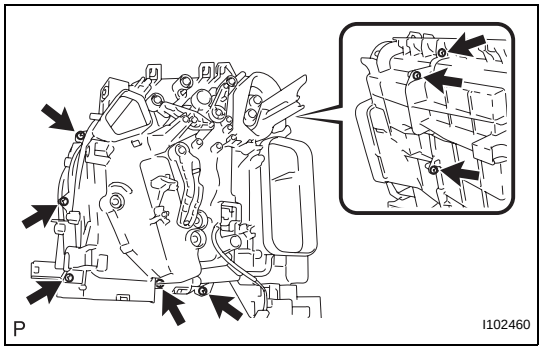

(b) Remove the 8 screws and separate the heater case.

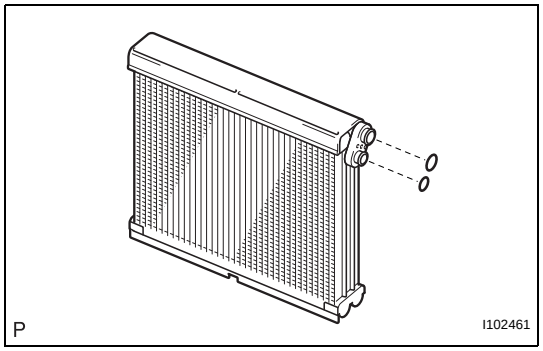

(c) Remove the cooler evaporator.
Remove the 2 O-rings from the cooler evaporator.

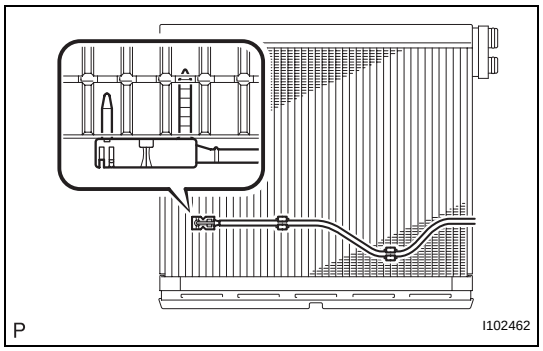

9. REMOVE NO. 1 COOLER THERMISTOR

(a) Remove the cooler thermistor from the cooler evaporator.

AC

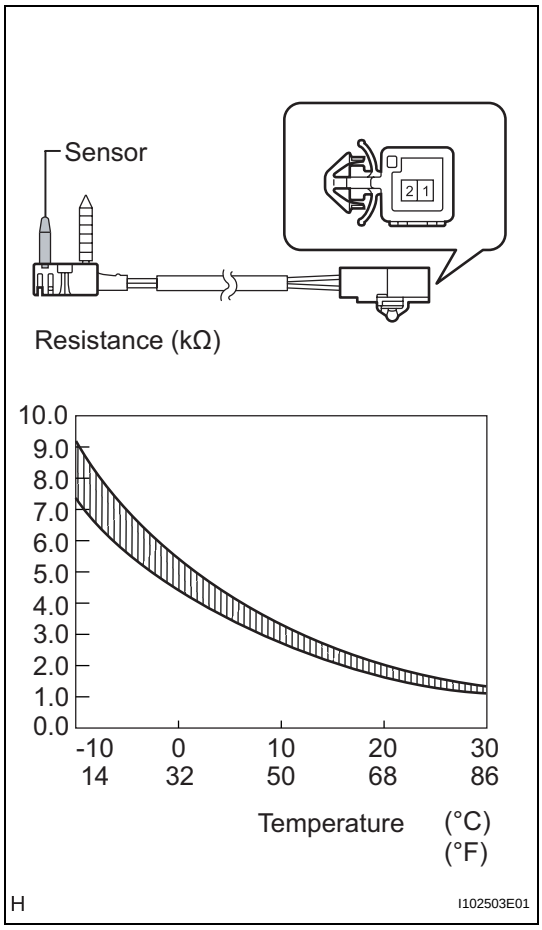

INSPECTION

1. INSPECT NO. 1 COOLER THERMISTOR

(a) Measure the resistance.

Standard resistance

Tester Connection	Condition	Specified Condition
1 - 2	-10°C (14°F)	7.30 to 9.10 kΩ
1 - 2	-5°C (23°F)	5.65 to 6.95 kΩ
1 - 2	0°C (32°F)	4.40 to 5.35 kΩ
1 - 2	5°C (41°F)	3.40 to 4.15 kΩ
1 - 2	10°C (50°F)	2.70 to 3.25 kΩ
1 - 2	15°C (59°F)	2.14 to 2.58 kΩ
1 - 2	20°C (68°F)	1.71 to 2.05 kΩ
1 - 2	25°C (77°F)	1.38 to 1.64 kΩ
1 - 2	30°C (86°F)	1.11 to 1.32 kΩ

NOTICE:

- **Touching the sensor even slightly may change the resistance value. Hold the connector of the sensor.**
- **When measuring the resistance, the temperature of the sensor and the cooler thermistor must be the same.**

HINT:

As the temperature increases, the resistance decreases (see the graph).

If the operation is not as specified, replace the cooler thermistor.

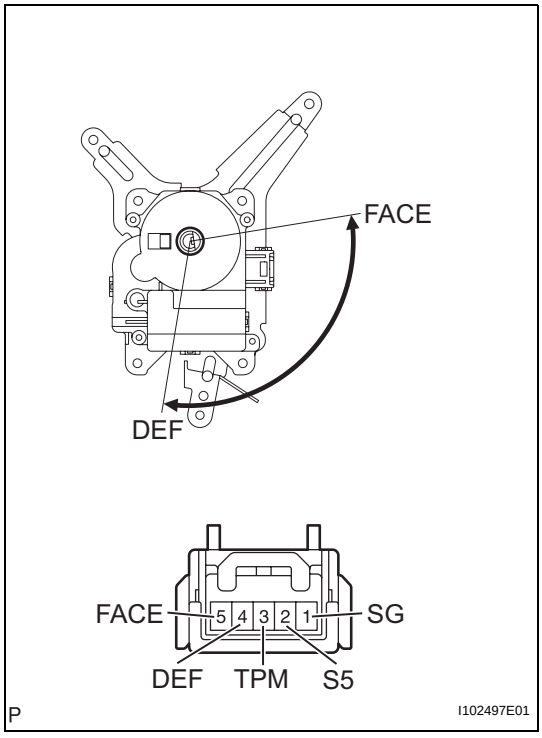

2. INSPECT MODE CONTROL SERVO MOTOR

(a) Inspect the servo motor operation.

(1) Connect the positive (+) lead from the battery to terminal 4 (DEF) and negative (-) lead to terminal 5 (FACE), then check that the lever turns to the DEF position smoothly.

Standard:

The motor operates smoothly.

If the operations are not as specified, replace the mode control servo motor.

(2) Connect the positive (+) lead from the battery to terminal 5 (FACE) and negative (-) lead to terminal 4 (DEF), then check that the lever turns to the FACE position smoothly.

Standard:

The motor operates smoothly.

If the operations are not as specified, replace the mode control servo motor.

(b) Check the servo motor resistance.

(1) Using an ohmmeter, measure the resistance and check the results in accordance with the values in the table below.

Standard resistance

Tester Connection	Servo Motor Position	Specified Condition
1 (SG) - 2 (S5)	Always	4.2 to 7.8 kΩ

Tester Connection	Servo Motor Position	Specified Condition
1 (SG) - 3 (TPM)	DEF Position	3.4 to 6.2 kΩ
1 (SG) - 3 (TPM)	FACE Position	0.8 to 1.6 kΩ

If the result is not as specified, replace the mode control servo motor.

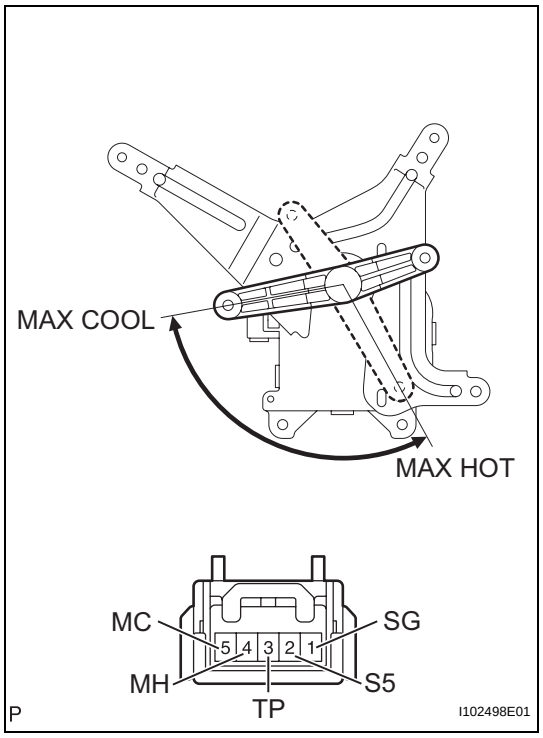

3. REMOVE AIR MIX CONTROL SERVO MOTOR

(a) Inspect the servo motor operation.

(1) Connect the positive (+) lead from the battery to terminal 4 (MH) and negative (-) lead to terminal 5 (MC), then check that the lever turns to the MAX HOT position smoothly.

Standard:

The motor operates smoothly.

If the operations are not as specified, replace the air mix control servo motor.

(2) Connect the positive (+) lead from the battery to terminal 5 (MC) and negative (-) lead to terminal 4 (MH), then check that the lever turns to the MAX COOL position smoothly.

Standard:

The motor operates smoothly.

If the operations are not as specified, replace the air mix control servo motor.

(b) Check the servo motor resistance.

(1) Using an ohmmeter, measure the resistance and check the results in accordance with the values in the table below.

Standard resistance

Tester Connection	Servo Motor Position	Specified Condition
1 (SG) - 2 (S5)	Always	4.2 to 7.8 kΩ
1 (SG) - 3 (TP)	MAX HOT Position	3.4 to 6.2 kΩ
1 (SG) - 3 (TP)	MAX COOL Position	0.8 to 1.6 kΩ

If the result is not as specified, replace the air mix control servo motor.

AC

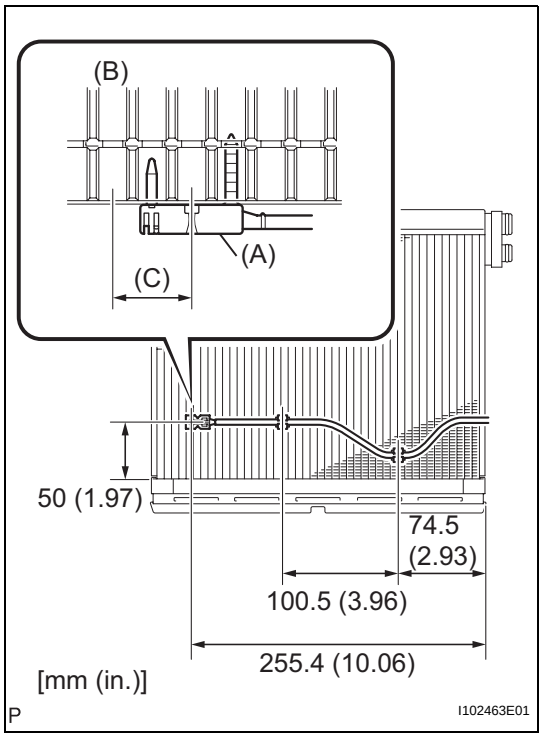

REASSEMBLY

1. INSTALL NO. 1 COOLER THERMISTOR

(a) Install the sensor onto the evaporator as shown in the illustration.

(b) Check that the sensor sticks to the evaporator surface as shown in the illustration (A: Sensor, B: Evaporator).

NOTICE:

If reusing the evaporator, do not reinsert the sensor in the same position that it was in before. Insert it within area C shown in the illustration.

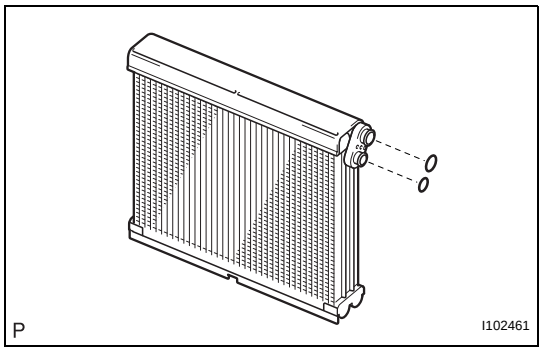

2. INSTALL NO. 1 COOLER EVAPORATOR SUB-ASSEMBLY

(a) Apply sufficient compressor oil (ND-OIL8) to 2 new O-rings and the fitting surface of the cooler evaporator.

Compressor oil:

ND-OIL8 or the equivalent

(b) Install the 2 O-rings onto the cooler evaporator.

(c) Install the cooler evaporator.

HINT:

If a new cooler evaporator is installed, add compressor oil to the cooler evaporator as follows.

Compressor oil:

ND-OIL8 or the equivalent. Add 40 cc (1.35 fl. oz.)

(d) Install the cooler evaporator onto the heater case.

(e) Install the heater case with the 8 screws.

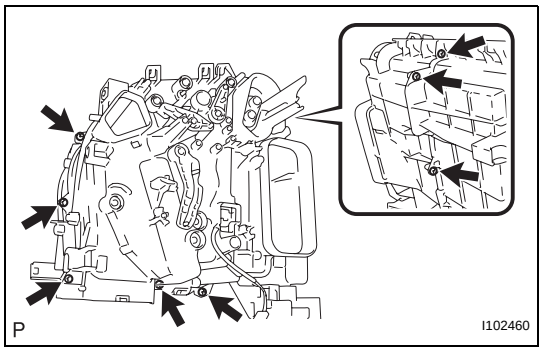

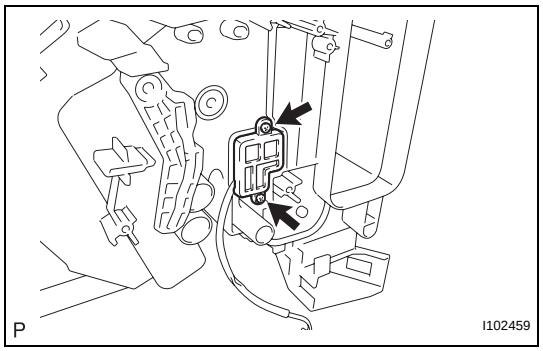

(f) Install the plate with the 2 screws.

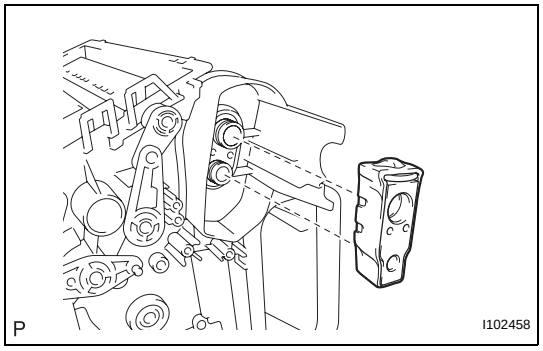

3. INSTALL COOLER EXPANSION VALVE

(a) Apply sufficient compressor oil (ND-OIL8) to the fitting surface of the cooler expansion valve.
Compressor oil:
ND-OIL8 or the equivalent

(b) Install the cooler expansion valve onto the cooler evaporator.

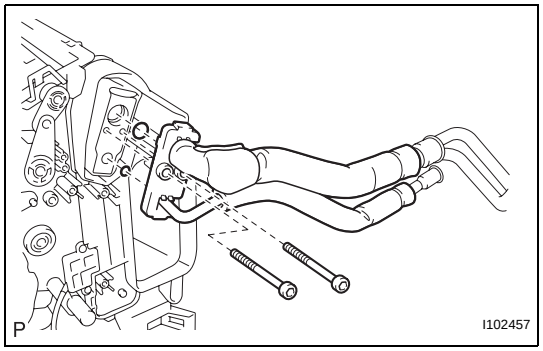

4. INSTALL AIR CONDITIONING TUBE ASSEMBLY

(a) Apply sufficient compressor oil (ND-OIL8) to 2 new O-rings and the fitting surface of the air conditioning tube.
Compressor oil:
ND-OIL8 or the equivalent

(b) Install the 2 O-rings onto the air conditioning tube.

(c) Using a hexagon wrench 4, install the air conditioning tube with the 2 hexagon bolts.
Torque: 3.5 N*m (36 kgf*cm, 31 in.*lbf)

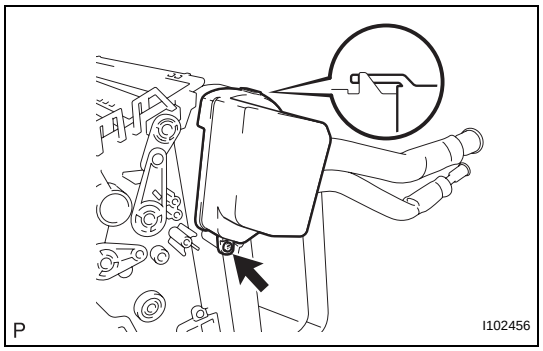

5. INSTALL COVER PLATE

(a) Engage the claw.

(b) Install the cover plate with the screw.

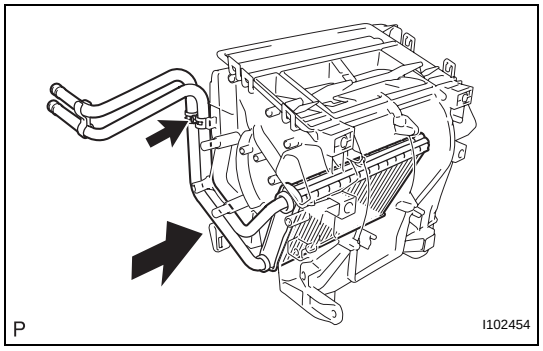

6. INSTALL HEATER RADIATOR UNIT SUB-ASSEMBLY

(a) Install the heater radiator unit onto the heater case.

(b) Install the clamp with the screw.

AC

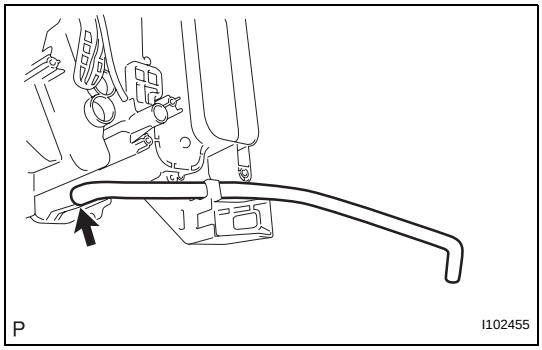

7. INSTALL COOLER UNIT DRAIN HOSE

(a) Install the cooler unit drain hose.

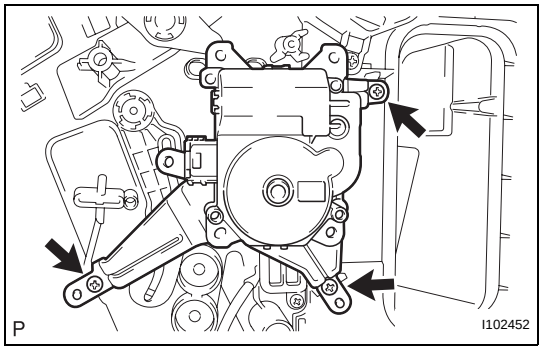

8. INSTALL AIR MIX CONTROL SERVO MOTOR

(a) Install the air mix control servo motor with the 3 screws.

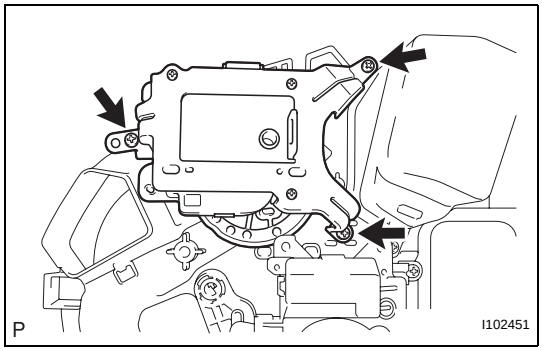

9. INSTALL MODE CONTROL SERVO MOTOR

(a) Install the mode control servo motor with the 3 screws.

INSTALLATION

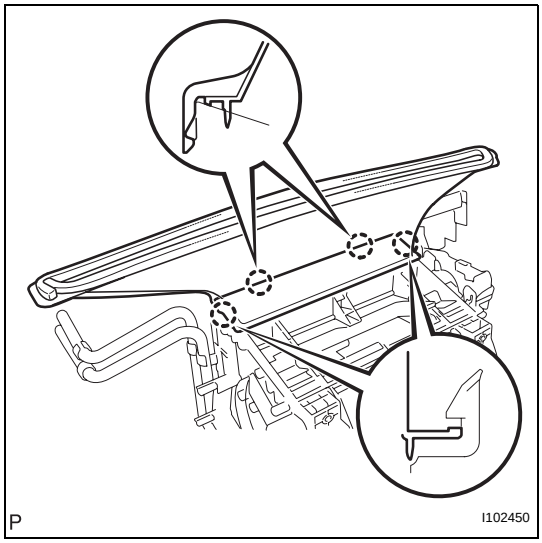

1. INSTALL LOWER DEFROSTER NOZZLE ASSEMBLY

(a) Engage the 4 claws and install the lower defroster nozzle.

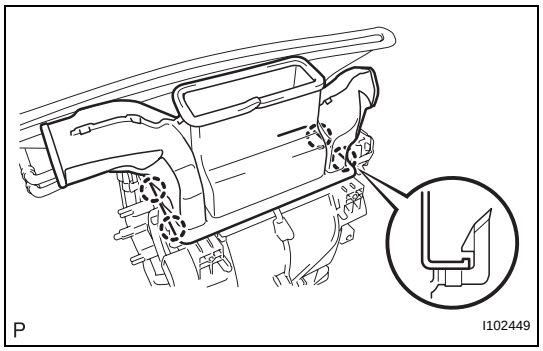

2. INSTALL HEATER TO REGISTER DUCT ASSEMBLY

(a) Engage the 4 claws and install the heater to register duct.

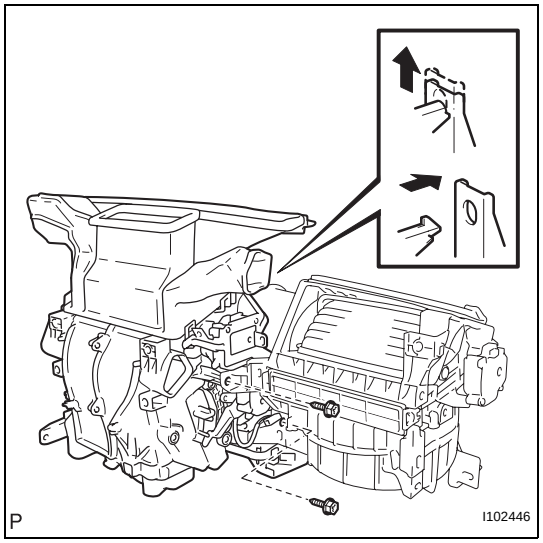

3. INSTALL AIR CONDITIONING UNIT ASSEMBLY

(a) Install the air conditioning unit with the 2 screws as shown in the illustration.

4. INSTALL INSTRUMENT PANEL REINFORCEMENT

(a) Provisionally install the air conditioning unit assembly.
(b) Insert the bracket hook into the holes of the reinforcement bracket, and provisionally install the reinforcement.
(c) Install the instrument panel reinforcement with the 7 bolts.
(d) Install the 2 caps.

AC

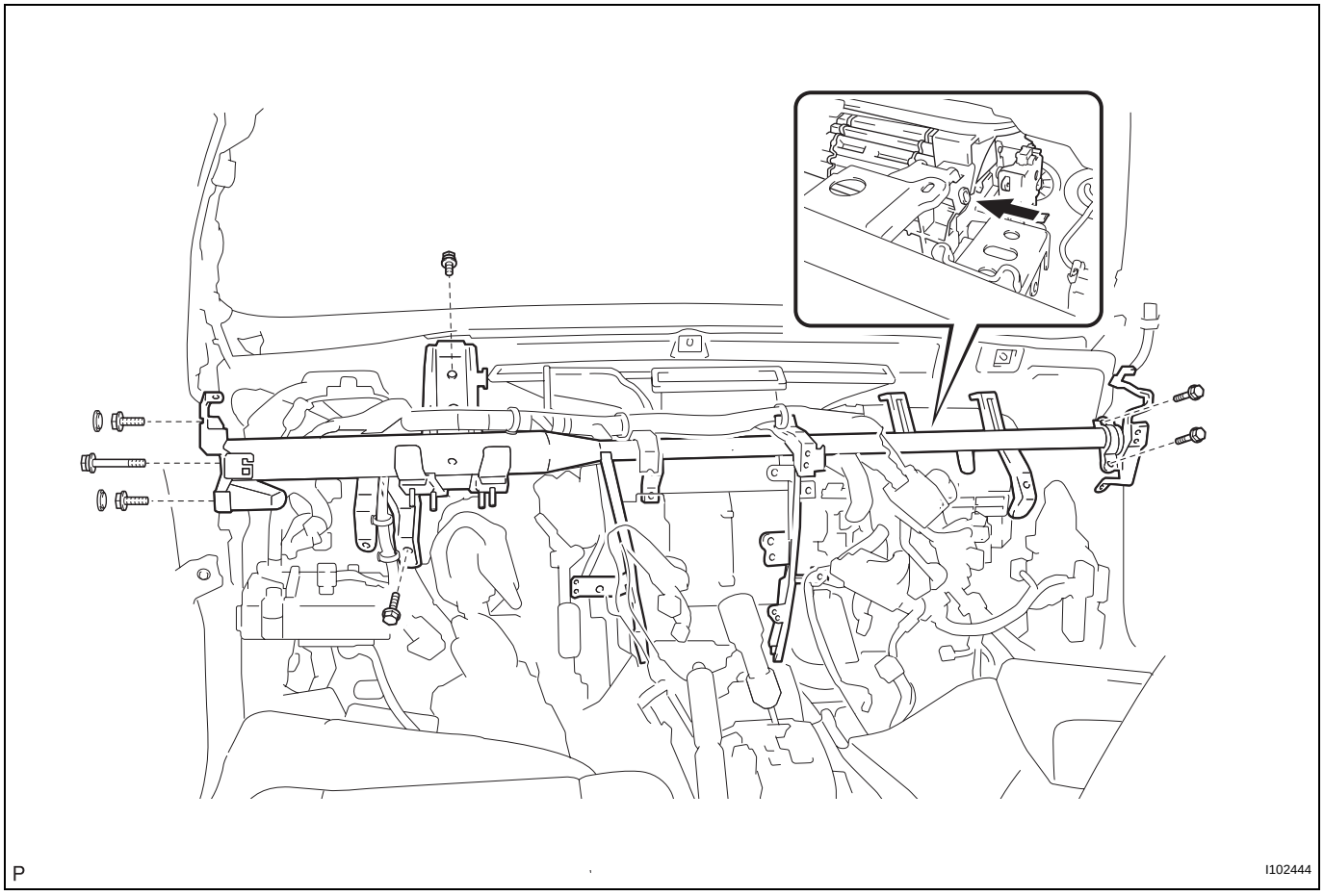

(e) Install the 5 bolts.
NOTICE:
Tighten the bolts in the sequence order shown in the illustration to install the air conditioner unit assembly.
Torque: 9.8 N*m (100 kgf*cm, 87 in.*lbf) for bolt

(f) Install the 2 nuts.
Torque: 5.4 N*m (55 kgf*cm, 48 in.*lbf) for nut

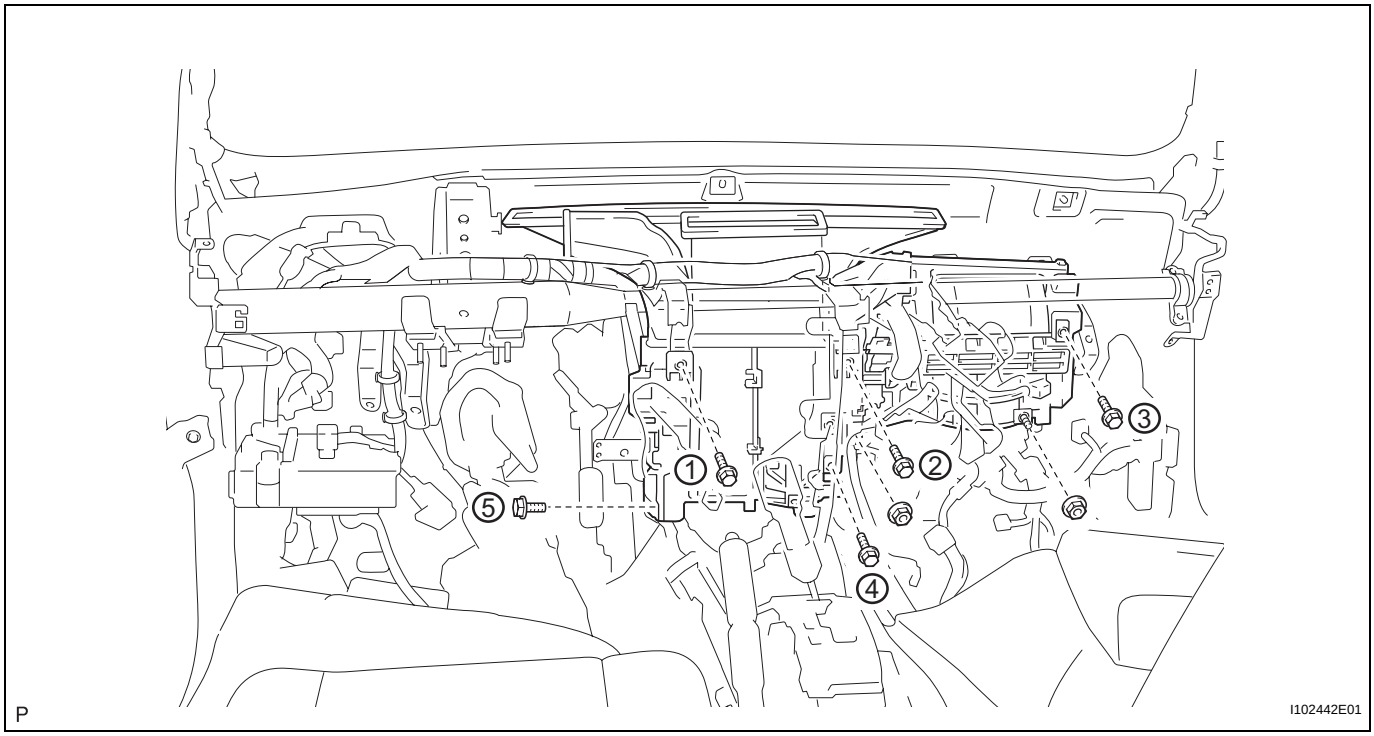

(g) Engage the clamps.

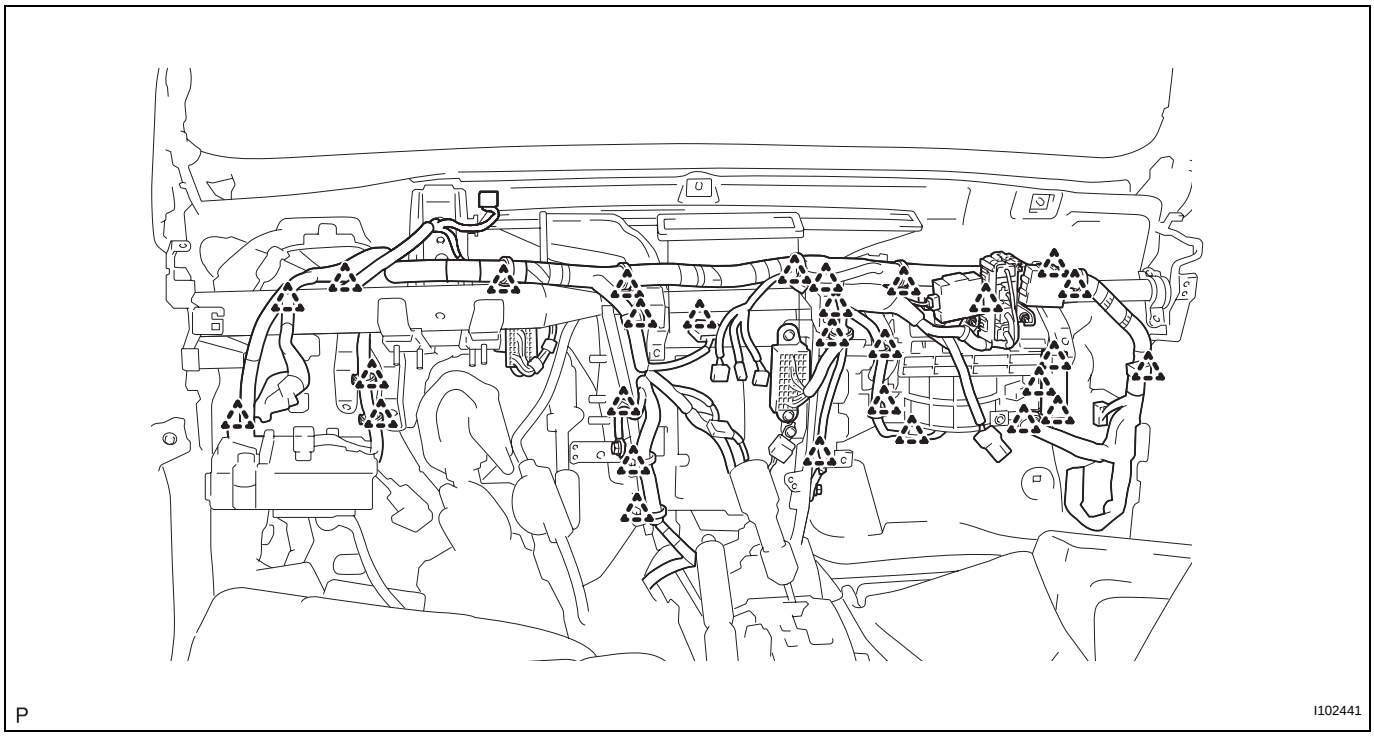

(h) Connect the connectors.

(i) Connect the wire harness with the 3 bolts and 5 nuts.

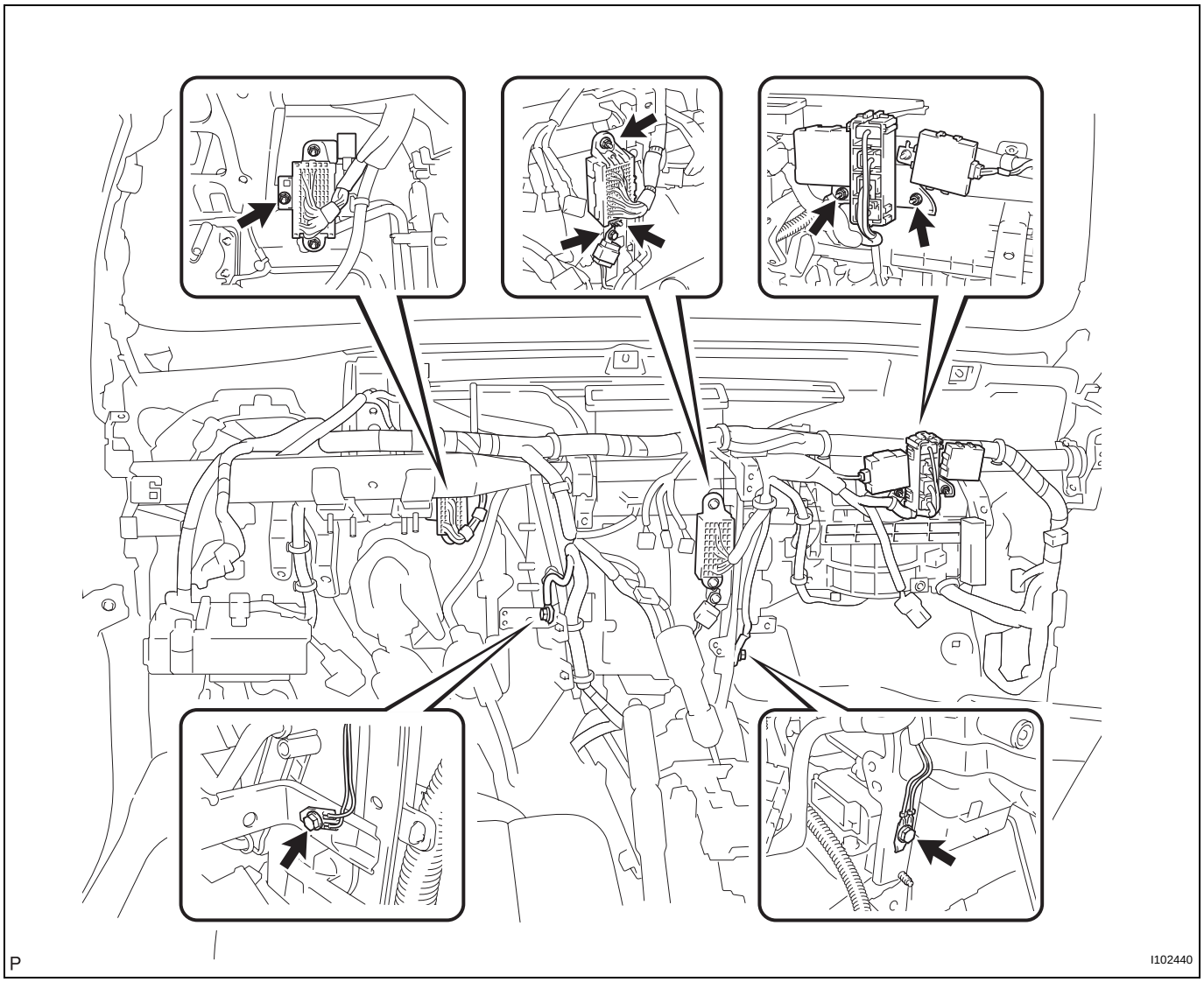

Torque: 7.3 N*m (74 kgf*cm, 65 in.*lbf) for nut

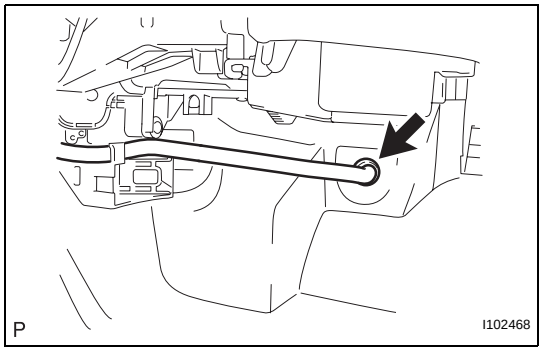

5. INSTALL COOLER UNIT DRAIN HOSE

(a) Install the cooler unit drain hose.

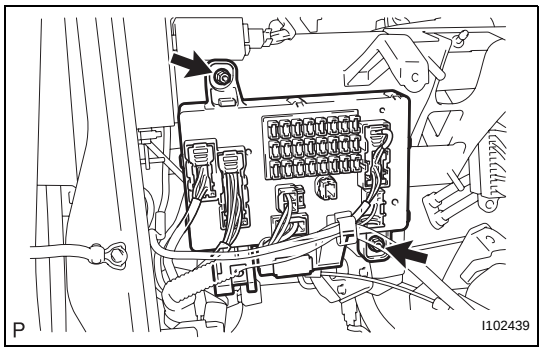

6. INSTALL MAIN BODY ECU (DRIVER SIDE J/B)

(a) Install the main body ECU with the 2 nuts.
Torque: 8.4 N*m (86 kgf*cm, 74 in.*lbf)

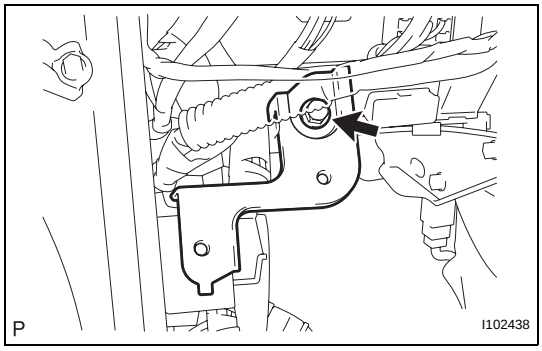

7. INSTALL INSTRUMENT PANEL SIDE BRACKET

(a) Install the instrument panel side bracket with the bolt.
Torque: 8.4 N*m (86 kgf*cm, 74 in.*lbf)

8. INSTALL STEERING COLUMN ASSEMBLY (See page SR-16)

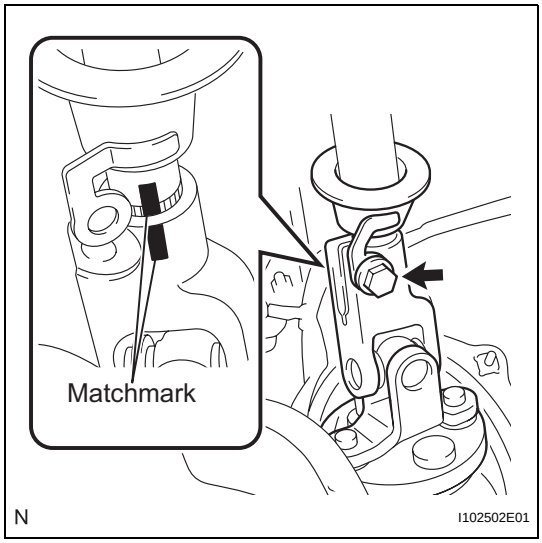

9. INSTALL STEERING INTERMEDIATE SHAFT ASSEMBLY

(a) Align the matchmarks on the steering column assembly and the steering intermediate shaft assembly.

(b) Install the steering intermediate shaft assembly and thrust stopper onto the steering column assembly with the bolt.
Torque: 36 N*m (367 kgf*cm, 27 ft.*lbf)

10. INSTALL STEERING COLUMN HOLE COVER (See page SR-17)

11. INSTALL ECM (See page ES-447)

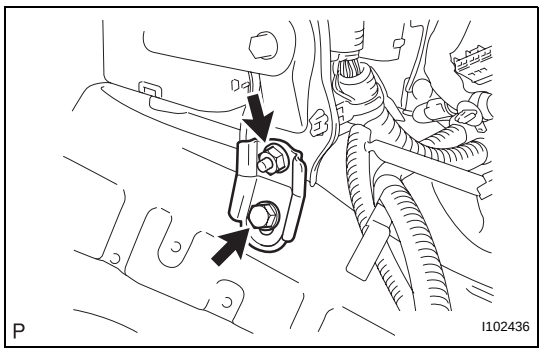

12. INSTALL NO. 1 INSTRUMENT PANEL BRACE BRACKET

(a) for LH side:

(1) Install the instrument panel brace mounting bracket with the bolt and nut.

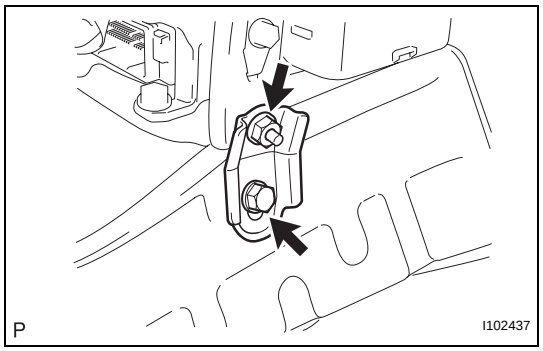

(b) for RH side:
(1) Install the instrument panel brace mounting bracket with the bolt and nut.

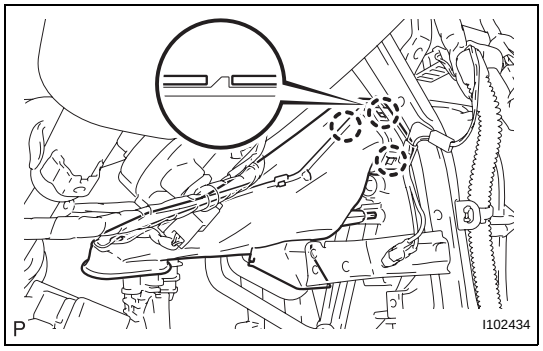

13. INSTALL NO. 1 AIR DUCT
(a) Engage the 3 claws and install the air duct.

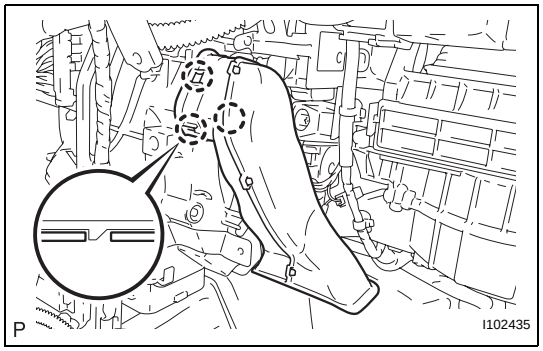

14. INSTALL NO. 2 AIR DUCT
(a) Engage the 3 claws and install the air duct.

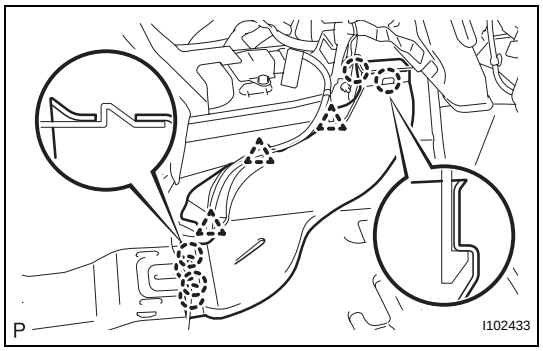

15. INSTALL REAR NO. 1 AIR DUCT
(a) Engage the 6 claws and 3 clamps and install the air duct.

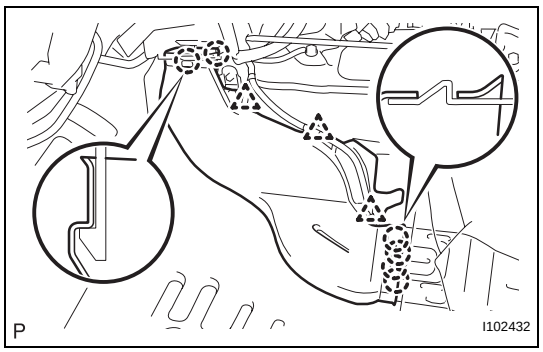

16. INSTALL REAR NO. 2 AIR DUCT
(a) Engage the 6 claws and 3 clamps and install the air duct.

AC

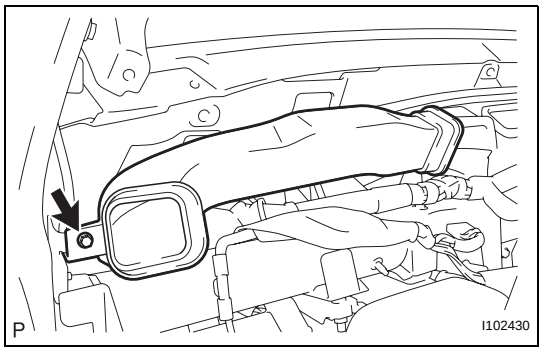

17. **INSTALL NO. 1 HEATER TO REGISTER DUCT**
    (a) Install the heater to register duct with the screw.

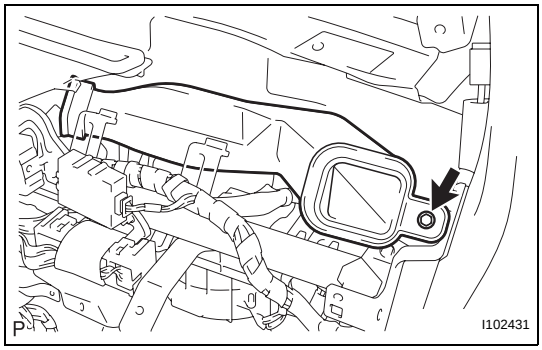

18. **INSTALL NO. 2 HEATER TO REGISTER DUCT**
    (a) Install the heater to register duct with the screw.
19. **INSTALL INSTRUMENT PANEL SUB-ASSEMBLY (See page IP-26)**
20. **CONNECT PASSENGER AIRBAG CONNECTOR (See page IP-26)**
21. **INSTALL INSTRUMENT PANEL FINISH PANEL END LH (See page IP-27)**
22. **INSTALL ASSIST GRIP RETAINER RH (See page IP-27)**
23. **INSTALL ASSIST GRIP RETAINER LH (See page IP-27)**
24. **INSTALL FRONT NO. 2 SPEAKER ASSEMBLY (See page AV-62)**
25. **INSTALL NO. 2 INSTRUMENT PANEL SPEAKER PANEL SUB-ASSEMBLY (See page IP-27)**
26. **INSTALL NO. 1 INSTRUMENT PANEL SPEAKER PANEL SUB-ASSEMBLY (See page IP-27)**
27. **INSTALL NO. 2 INSTRUMENT PANEL REGISTER ASSEMBLY (See page IP-27)**
28. **INSTALL INSTRUMENT PANEL LOWER FINISH PANEL SUB-ASSEMBLY RH (See page IP-28)**
29. **INSTALL GLOVE COMPARTMENT DOOR ASSEMBLY (See page IP-28)**
30. **INSTALL COMBINATION METER ASSEMBLY (See page IP-28)**
31. **INSTALL INSTRUMENT CLUSTER FINISH PANEL (See page IP-29)**
32. **INSTALL LOWER INSTRUMENT PANEL LH (See page IP-29)**
33. **INSTALL LOWER INSTRUMENT PANEL FINISH PANEL SUB-ASSEMBLY LH (See page IP-29)**
34. **CONNECT HOOD LOCK CONTROL LEVER SUB-ASSEMBLY (See page IP-30)**
35. **INSTALL NO. 1 INSTRUMENT PANEL REGISTER ASSEMBLY (See page IP-30)**

36. INSTALL INSTRUMENT LOWER COVER SUB-ASSEMBLY (See page IP-30)
37. INSTALL CONSOLE UPPER PANEL NO. 1 GARNISH (See page IP-31)
38. INSTALL FRONT CONSOLE BOX (See page IP-31)
39. INSTALL BOX BOTTOM MAT (See page IP-31)
40. INSTALL CONSOLE UPPER REAR PANEL SUB-ASSEMBLY (See page IP-31)
41. INSTALL SHIFT LEVER KNOB SUB-ASSEMBLY (for Manual Transmission) (See page IP-32)
42. INSTALL SHIFT LEVER KNOB SUB-ASSEMBLY (for 4WD) (See page IP-32)
43. INSTALL PARKING BRAKE HOLE COVER SUB-ASSEMBLY (See page IP-32)
44. INSTALL RADIO RECEIVER ASSEMBLY (See page AV-56)
45. INSTALL INTEGRATION CONTROL AND PANEL ASSEMBLY (See page IP-32)
46. INSTALL INSTRUMENT PANEL GARNISH LH (See page IP-33)
47. INSTALL INSTRUMENT PANEL GARNISH RH (See page IP-33)
48. INSTALL FRONT PILLAR GARNISH RH (See page IR-43)
49. INSTALL FRONT PILLAR GARNISH LH (See page IR-43)
50. INSTALL ASSIST GRIP ASSEMBLY (See page IR-43)
51. INSTALL ASSIST GRIP PLUG (See page IR-44)
52. INSTALL FRONT DOOR OPENING TRIM WEATHERSTRIP LH (See page IP-33)
53. INSTALL FRONT DOOR OPENING TRIM WEATHERSTRIP RH (See page IP-33)
54. INSTALL COWL SIDE TRIM BOARD RH (See page IR-45)
55. INSTALL COWL SIDE TRIM BOARD LH (See page IR-45)
56. INSTALL FOOTREST CLIP (See page IR-2)
57. INSTALL FRONT FLOOR FOOTREST (See page IR-2)
58. INSTALL FRONT DOOR SCUFF PLATE RH (See page IR-45)
59. INSTALL FRONT DOOR SCUFF PLATE LH (See page IR-45)

60. **INSTALL COMBINATION SWITCH ASSEMBLY (See page SR-17)**

61. **INSTALL UPPER STEERING COLUMN COVER (See page SR-17)**

62. **INSTALL LOWER STEERING COLUMN COVER (See page SR-18)**

63. **INSTALL STEERING WHEEL ASSEMBLY (See page SR-18)**

64. **INSTALL STEERING PAD (See page RS-346)**

65. **INSTALL LOWER NO. 2 STEERING WHEEL COVER (See page RS-347)**

66. **INSTALL LOWER NO. 3 STEERING WHEEL COVER (See page RS-347)**

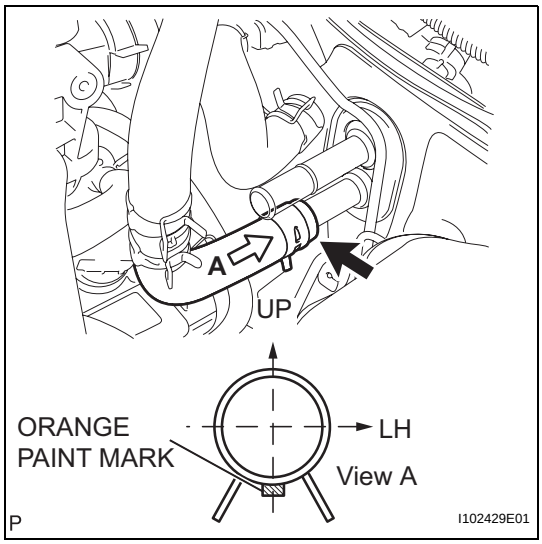

67. **CONNECT HEATER WATER OUTLET HOSE A (FROM HEATER UNIT)**
    (a) Install the heater water outlet hose onto the heater unit.
    NOTICE:
    Perform the installation with the hose clip and mark at the correct angle as shown in the illustration.

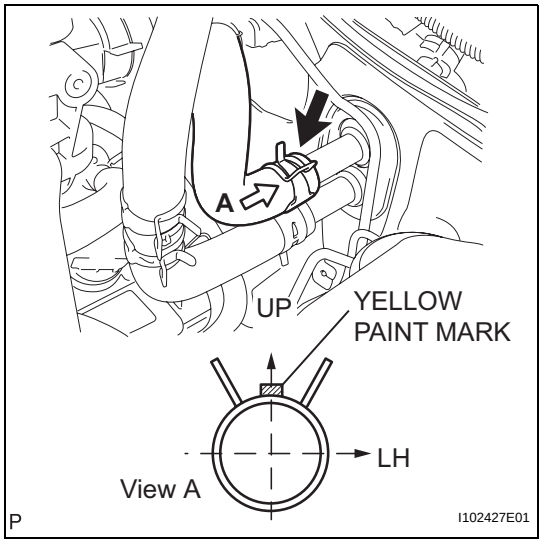

68. **CONNECT HEATER INLET WATER HOSE**
    (a) Install the heater water inlet hose onto the heater unit.
    NOTICE:
    Perform the installation with the hose clip and mark at the correct angle as shown in the illustration.

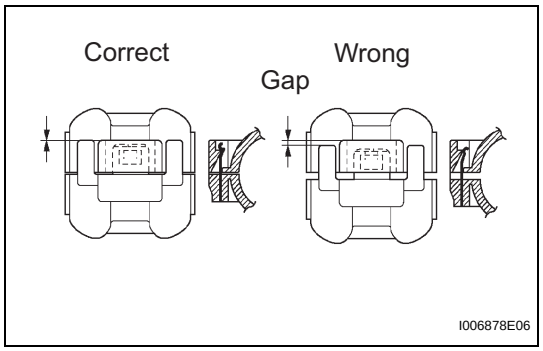

69. **INSTALL COOLER REFRIGERANT LIQUID PIPE A**
    (a) Remove the vinyl tape from liquid tube A and the connecting portion of the unit.
    (b) Apply sufficient compressor oil (ND-OIL8) to a new O-ring and the connecting part of the liquid pipe.
    Compressor oil:
    ND-OIL8 or the equivalent
    (c) Install the O-ring onto the liquid pipe.
    (d) Install the liquid and piping clamp.
    HINT:
    After connection, check the claw fitting of the piping clamp.

70. **INSTALL COOLER REFRIGERANT SUCTION PIPE A**
    HINT:
    Connection procedure of the suction pipe is the same as for the liquid pipe.

71. **INSTALL COWL TOP VENTILATOR LOUVER LH (See page WW-30)**

72. **INSTALL COWL TOP VENTILATOR LOUVER RH (See page WW-30)**

73. **INSTALL COWL TOP VENTILATOR LOUVER SUB-ASSEMBLY (See page WW-31)**

74. **INSTALL FRONT FENDER SIDE PANEL UPPER LH (See page WW-31)**

75. **INSTALL FRONT FENDER SIDE PANEL UPPER RH (See page WW-31)**

76. **INSTALL ANTENNA ORNAMENT (See page WW-31)**

77. **INSTALL ROOF ANTENNA POLE SUB-ASSEMBLY (See page AV-116)**

78. **INSTALL FRONT WIPER ARM AND BLADE ASSEMBLY LH (See page WW-32)**

79. **INSTALL FRONT WIPER ARM AND BLADE ASSEMBLY RH (CENTER SIDE) (See page WW-32)**

80. **INSTALL FRONT WIPER ARM AND BLADE ASSEMBLY RH (See page WW-33)**

81. **INSTALL WINDSHIELD WIPER ARM COVER (See page WW-34)**

82. **ADD ENGINE COOLANT (See page CO-3)**

83. **CONNECT CABLE TO NEGATIVE BATTERY TERMINAL**
    Torque: 3.9 N*m (40 kgf*cm, 35 in.*lbf)

84. **CHECK SRS WARNING LIGHT**
    RS-29

85. **CHARGE REFRIGERANT (See page AC-16)**

86. **WARM UP ENGINE (See page AC-18)**

87. **CHECK FOR ENGINE COOLANT LEAKAGE (See page CO-4)**

88. **CHECK FOR REFRIGERANT LEAKAGE (See page AC-18)**

89. **POSITION FRONT WHEELS FACING STRAIGHT AHEAD**

REMOVAL

CAUTION:
Some of these service operations affect the SRS airbag system. Read the precautionary notices concerning the SRS airbag system before servicing (See page RS-1).
HINT:
Use the same procedure for both the RH and LH sides.

1. **BOLTS, SCREWS AND NUTS TABLE (See page IP-9)**
2. **DISCONNECT CABLE FROM NEGATIVE BATTERY TERMINAL**
   Wait for at least 90 seconds after disconnecting the cable to prevent the airbag from working.
3. **DISCHARGE REFRIGERANT FROM REFRIGERATION SYSTEM (See page AC-16)**
4. **DRAIN ENGINE COOLANT (See page CO-3)**
5. **REMOVE ROOF ANTENNA POLE SUB-ASSEMBLY (See page AV-116)**
6. **REMOVE WINDSHIELD WIPER ARM COVER (See page WW-25)**
7. **REMOVE FRONT WIPER ARM AND BLADE ASSEMBLY LH (See page WW-26)**
8. **REMOVE FRONT WIPER ARM AND BLADE ASSEMBLY RH (CENTER SIDE) (See page WW-26)**
9. **REMOVE FRONT WIPER ARM AND BLADE ASSEMBLY RH (See page WW-26)**
10. **REMOVE FRONT FENDER SIDE PANEL UPPER LH (See page WW-26)**
11. **REMOVE ANTENNA ORNAMENT (See page WW-26)**
12. **REMOVE FRONT FENDER SIDE PANEL UPPER RH (See page WW-26)**
13. **REMOVE COWL TOP VENTILATOR LOUVER ASSEMBLY (See page WW-27)**
14. **REMOVE COWL TOP VENTILATOR LOUVER RH (See page WW-27)**
15. **REMOVE COWL TOP VENTILATOR LOUVER LH (See page WW-27)**
16. **DISCONNECT COOLER REFRIGERANT SUCTION PIPE A (See page AC-32)**
17. **DISCONNECT COOLER REFRIGERANT LIQUID PIPE A (See page AC-33)**
18. **DISCONNECT HEATER INLET WATER HOSE (See page AC-33)**
19. **DISCONNECT HEATER WATER OUTLET HOSE A (FROM HEATER UNIT) (See page AC-33)**

20. POSITION FRONT WHEELS FACING STRAIGHT AHEAD
21. REMOVE LOWER NO. 3 STEERING WHEEL COVER (See page RS-345)
22. REMOVE LOWER NO. 2 STEERING WHEEL COVER (See page RS-345)
23. REMOVE STEERING PAD (See page RS-346)
24. REMOVE STEERING WHEEL ASSEMBLY (See page SR-8)
25. REMOVE LOWER STEERING COLUMN COVER (See page SR-8)
26. REMOVE UPPER STEERING COLUMN COVER (See page SR-8)
27. REMOVE COMBINATION SWITCH ASSEMBLY (See page SR-9)
28. REMOVE FRONT DOOR SCUFF PLATE RH (See page IR-15)
29. REMOVE FRONT DOOR SCUFF PLATE LH (See page IR-15)
30. REMOVE FRONT FLOOR FOOTREST (See page IR-2)
31. REMOVE FOOTREST CLIP (See page IR-2)
32. REMOVE COWL SIDE TRIM BOARD RH (See page IR-15)
33. REMOVE COWL SIDE TRIM BOARD LH (See page IR-15)
34. REMOVE FRONT DOOR OPENING TRIM WEATHERSTRIP RH (See page IP-10)
35. REMOVE FRONT DOOR OPENING TRIM WEATHERSTRIP RH (See page IP-10)
36. REMOVE ASSIST GRIP PLUG (See page IR-17)
37. REMOVE ASSIST GRIP ASSEMBLY (See page IR-17)
38. REMOVE FRONT PILLAR GARNISH RH (See page IR-18)
39. REMOVE FRONT PILLAR GARNISH LH (See page IR-18)
40. REMOVE INSTRUMENT PANEL GARNISH LH (See page IP-10)
41. REMOVE INSTRUMENT PANEL GARNISH RH (See page IP-10)
42. REMOVE INTEGRATION CONTROL AND PANEL ASSEMBLY (See page IP-11)
43. REMOVE RADIO RECEIVER ASSEMBLY (See page AV-55)

44. REMOVE PARKING BRAKE HOLE COVER SUB-ASSEMBLY (See page IP-11)
45. REMOVE SHIFT LEVER KNOB SUB-ASSEMBLY (for Manual Transmission) (See page IP-11)
46. REMOVE SHIFT LEVER KNOB SUB-ASSEMBLY (for 4WD) (See page IP-11)
47. REMOVE CONSOLE UPPER REAR PANEL SUB-ASSEMBLY (See page IP-12)
48. REMOVE BOX BOTTOM MAT (See page IP-12)
49. REMOVE FRONT CONSOLE BOX (See page IP-12)
50. REMOVE CONSOLE UPPER PANEL NO. 1 GARNISH (See page IP-12)
51. REMOVE INSTRUMENT LOWER COVER SUB-ASSEMBLY (See page IP-13)
52. REMOVE NO. 1 INSTRUMENT PANEL REGISTER ASSEMBLY (See page IP-13)
53. SEPARATE HOOD LOCK CONTROL LEVER SUB-ASSEMBLY (See page IP-13)
54. REMOVE LOWER INSTRUMENT PANEL FINISH PANEL SUB-ASSEMBLY LH (See page IP-14)
55. REMOVE LOWER INSTRUMENT PANEL LH (See page IP-14)
56. REMOVE INSTRUMENT CLUSTER FINISH PANEL (See page IP-14)
57. REMOVE COMBINATION METER ASSEMBLY (See page IP-14)
58. REMOVE GLOVE COMPARTMENT DOOR ASSEMBLY (See page IP-15)
59. REMOVE INSTRUMENT PANEL LOWER FINISH PANEL SUB-ASSEMBLY RH (See page IP-15)
60. REMOVE NO. 2 INSTRUMENT PANEL REGISTER ASSEMBLY (See page IP-16)
61. REMOVE NO. 2 INSTRUMENT PANEL SPEAKER PANEL SUB-ASSEMBLY (See page IP-16)
62. REMOVE NO. 1 INSTRUMENT PANEL SPEAKER PANEL SUB-ASSEMBLY (See page IP-16)
63. REMOVE FRONT NO. 2 SPEAKER ASSEMBLY (See page AV-62)
64. REMOVE ASSIST GRIP RETAINER RH (See page IP-16)
65. REMOVE ASSIST GRIP RETAINER LH (See page IP-16)
66. DISCONNECT PASSENGER AIRBAG CONNECTOR (See page IP-16)

67. **REMOVE INSTRUMENT PANEL SUB-ASSEMBLY (See page IP-16)**
68. **REMOVE INSTRUMENT PANEL FINISH PANEL END LH (See page IP-21)**
69. **REMOVE NO. 1 HEATER TO REGISTER DUCT (See page AC-35)**
70. **REMOVE NO. 2 HEATER TO REGISTER DUCT (See page AC-36)**
71. **REMOVE REAR NO. 1 AIR DUCT (See page AC-36)**
72. **REMOVE REAR NO. 2 AIR DUCT (See page AC-36)**
73. **REMOVE NO. 1 AIR DUCT (See page AC-36)**
74. **REMOVE NO. 2 AIR DUCT (See page AC-36)**
75. **REMOVE NO. 1 INSTRUMENT PANEL BRACE MOUNTING BRACKET (See page AC-37)**
76. **REMOVE ECM (See page ES-446)**
77. **REMOVE STEERING COLUMN HOLE COVER (See page SR-9)**
78. **SEPARATE STEERING INTERMEDIATE SHAFT ASSEMBLY (See page AC-37)**
79. **REMOVE STEERING COLUMN ASSEMBLY (See page SR-10)**
80. **REMOVE INSTRUMENT PANEL SIDE BRACKET (See page AC-37)**
81. **SEPARATE MAIN BODY ECU (DRIVER SIDE J/B) (See page AC-38)**
82. **REMOVE COOLER UNIT DRAIN HOSE (See page AC-38)**
83. **REMOVE INSTRUMENT PANEL REINFORCEMENT (See page AC-38)**
84. **REMOVE BLOWER UNIT ASSEMBLY**
    (a) Remove the 2 screws.
    (b) Remove the blower unit as shown in the illustration.

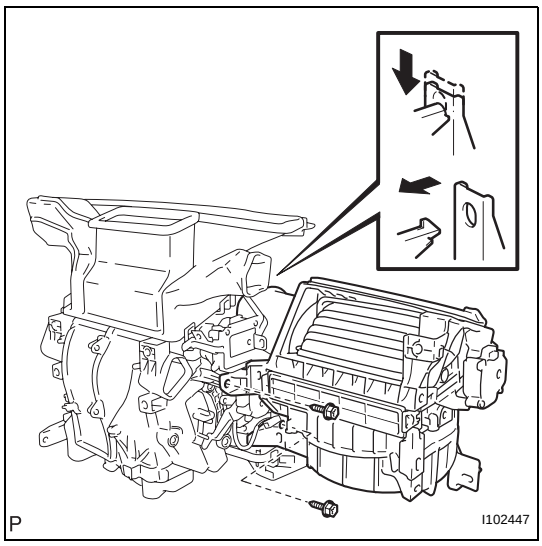

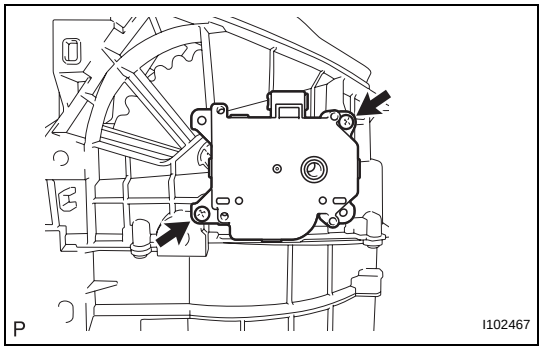

DISASSEMBLY

1. REMOVE AIR INLET CONTROL SERVO MOTOR

(a) Remove the 2 screws and remove the air inlet control servo motor.

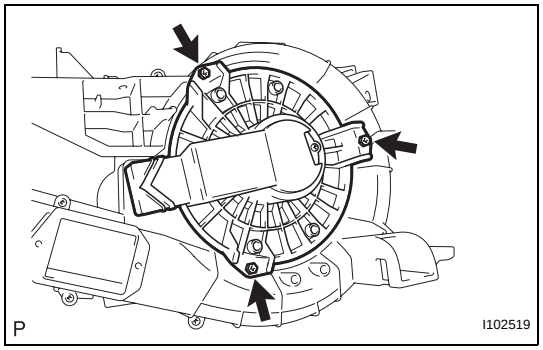

2. REMOVE BLOWER MOTOR

(a) Remove the 3 screws and the blower motor.

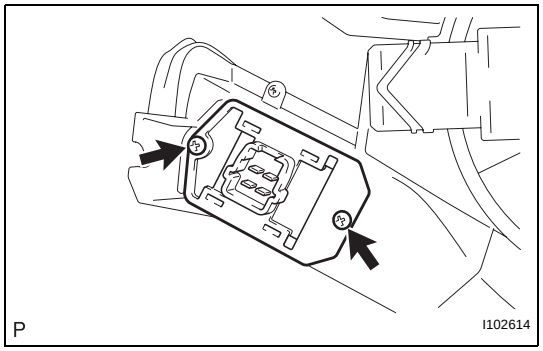

3. REMOVE BLOWER RESISTOR

(a) Remove the 2 screws and the blower resistor.

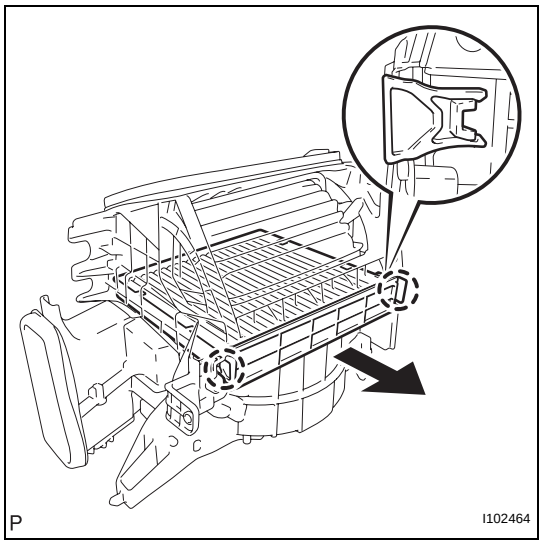

4. REMOVE CLEAN AIR FILTER SUB-ASSEMBLY

(a) Disengage the 2 claws and remove the air filter.

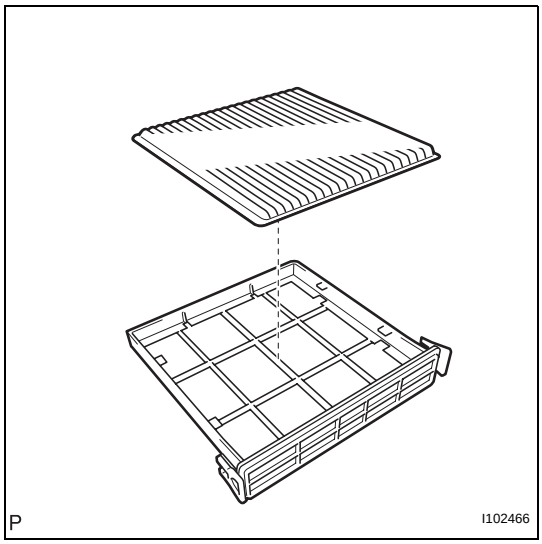

5. REMOVE AIR REFINER ELEMENT

(a) Remove the air refiner element.

AC

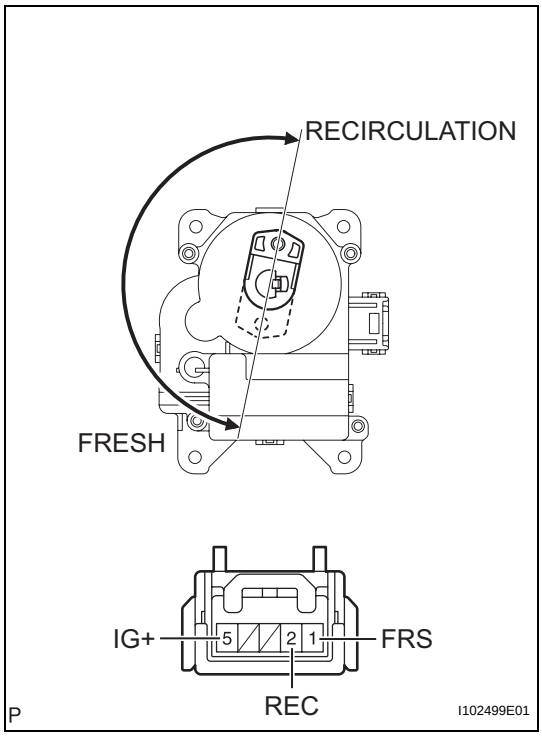

INSPECTION

1. INSPECT AIR INLET CONTROL SERVO MOTOR

(a) Inspect the servo motor operation.

(1) Connect the positive (+) lead from the battery to terminal 5 (IG+) and negative (-) lead to terminal 1 (FRS), then check that the lever turns to the FRESH side smoothly.

Standard:

The motor operates smoothly.

If the operations are not as specified, replace the air inlet control servo motor.

(2) Connect the positive (+) lead from the battery to terminal 5 (IG+) and negative (-) lead to terminal 2 (REC), then check that the lever turns to the RECIRCULATION side smoothly.

Standard:

The motor operates smoothly.

If the operations are not as specified, replace the air inlet control servo motor.

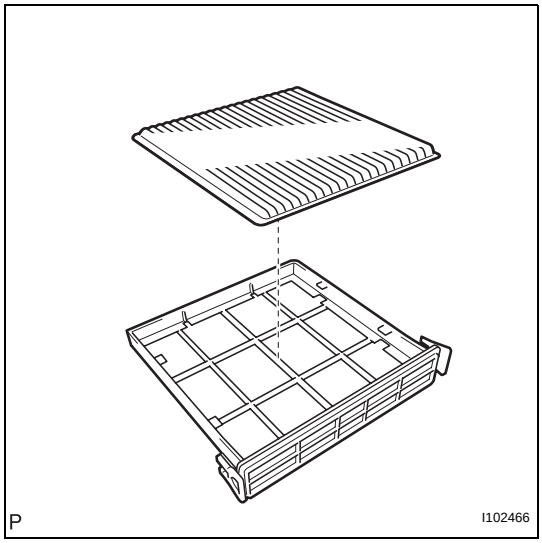

REASSEMBLY

1. INSTALL AIR REFINER ELEMENT

(a) Install the air refiner element.

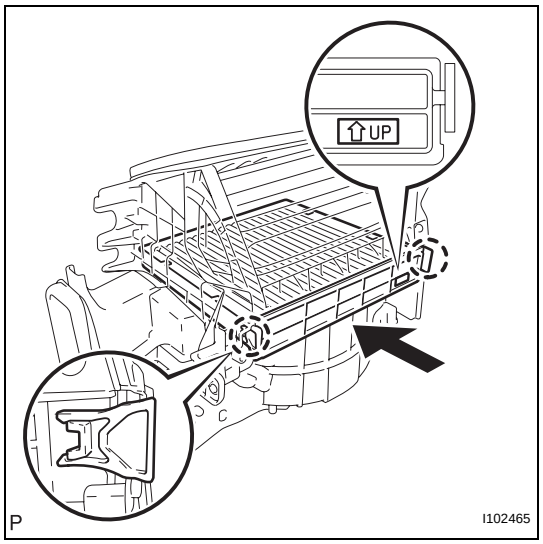

2. INSTALL CLEAN AIR FILTER SUB-ASSEMBLY

(a) Engage the 2 claws and install the air filter.

NOTICE:

Install the air filter with its UP mark oriented in the correct direction.

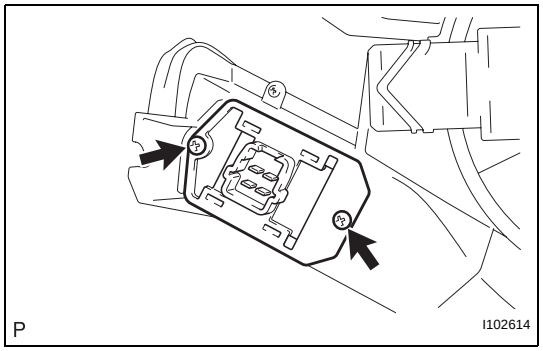

3. INSTALL BLOWER RESISTOR

(a) Install the blower resistor with the 2 screws.

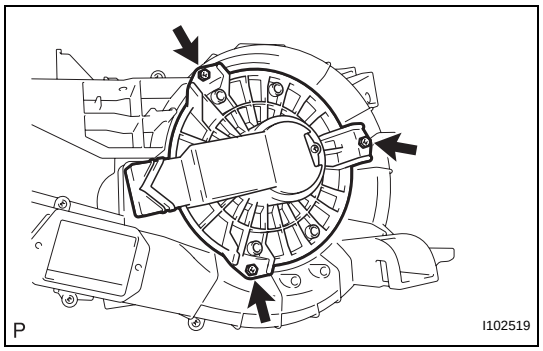

4. INSTALL BLOWER MOTOR

(a) Install the blower motor with the 3 screws.

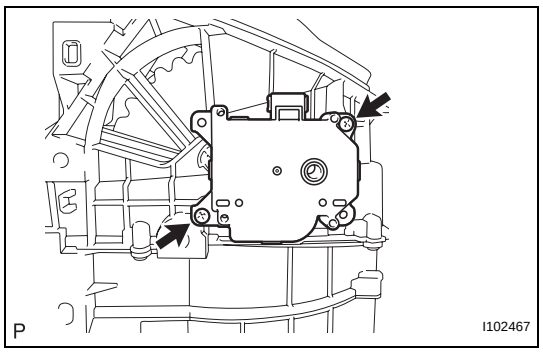

5. INSTALL AIR INLET CONTROL SERVO MOTOR

(a) Install the air inlet control servo motor with the 2 screws.

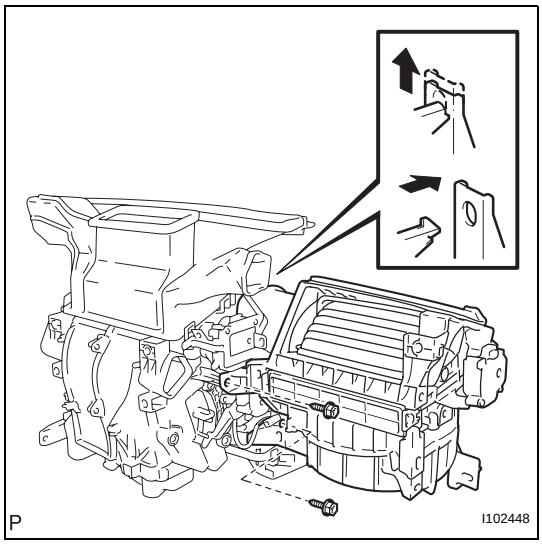

AC

INSTALLATION

1. **INSTALL BLOWER UNIT ASSEMBLY**
   (a) Install the 2 screws and blower unit as shown in the illustration.
2. **INSTALL INSTRUMENT PANEL REINFORCEMENT (See page AC-49)**
3. **INSTALL COOLER UNIT DRAIN HOSE (See page AC-51)**
4. **INSTALL MAIN BODY ECU (DRIVER SIDE J/B) (See page AC-52)**
5. **INSTALL INSTRUMENT PANEL SIDE BRACKET (See page AC-52)**
6. **INSTALL STEERING COLUMN ASSEMBLY (See page SR-16)**
7. **INSTALL STEERING INTERMEDIATE SHAFT ASSEMBLY (See page AC-52)**
8. **INSTALL STEERING COLUMN HOLE COVER (See page SR-17)**
9. **INSTALL ECM (See page ES-447)**
10. **INSTALL NO. 1 INSTRUMENT PANEL BRACE BRACKET (See page AC-52)**
11. **INSTALL NO. 1 AIR DUCT (See page AC-53)**
12. **INSTALL NO. 2 AIR DUCT (See page AC-53)**
13. **INSTALL REAR NO. 1 AIR DUCT (See page AC-53)**
14. **INSTALL REAR NO. 2 AIR DUCT (See page AC-53)**
15. **INSTALL NO. 1 HEATER TO REGISTER DUCT (See page AC-54)**
16. **INSTALL NO. 2 HEATER TO REGISTER DUCT (See page AC-54)**
17. **INSTALL INSTRUMENT PANEL SUB-ASSEMBLY (See page IP-26)**
18. **CONNECT PASSENGER AIRBAG CONNECTOR (See page IP-26)**
19. **INSTALL INSTRUMENT PANEL FINISH PANEL END LH (See page IP-27)**
20. **INSTALL ASSIST GRIP RETAINER RH (See page IP-27)**
21. **INSTALL ASSIST GRIP RETAINER LH (See page IP-27)**
22. **INSTALL FRONT NO. 2 SPEAKER ASSEMBLY (See page AV-62)**
23. **INSTALL NO. 2 INSTRUMENT PANEL SPEAKER PANEL SUB-ASSEMBLY (See page IP-27)**

24. INSTALL NO. 1 INSTRUMENT PANEL SPEAKER PANEL SUB-ASSEMBLY (See page IP-27)
25. INSTALL NO. 2 INSTRUMENT PANEL REGISTER ASSEMBLY (See page IP-27)
26. INSTALL INSTRUMENT PANEL LOWER FINISH PANEL SUB-ASSEMBLY RH (See page IP-28)
27. INSTALL GLOVE COMPARTMENT DOOR ASSEMBLY (See page IP-28)
28. INSTALL COMBINATION METER ASSEMBLY (See page IP-28)
29. INSTALL INSTRUMENT CLUSTER FINISH PANEL (See page IP-29)
30. INSTALL LOWER INSTRUMENT PANEL LH (See page IP-29)
31. INSTALL LOWER INSTRUMENT PANEL FINISH PANEL SUB-ASSEMBLY LH (See page IP-29)
32. CONNECT HOOD LOCK CONTROL LEVER SUB-ASSEMBLY (See page IP-30)
33. INSTALL NO. 1 INSTRUMENT PANEL REGISTER ASSEMBLY (See page IP-30)
34. INSTALL INSTRUMENT LOWER COVER SUB-ASSEMBLY (See page IP-30)
35. INSTALL CONSOLE UPPER PANEL NO. 1 GARNISH (See page IP-31)
36. INSTALL FRONT CONSOLE BOX (See page IP-31)
37. INSTALL BOX BOTTOM MAT (See page IP-31)
38. INSTALL CONSOLE UPPER REAR PANEL SUB-ASSEMBLY (See page IP-31)
39. INSTALL SHIFT LEVER KNOB SUB-ASSEMBLY (for Manual Transmission) (See page IP-32)
40. INSTALL SHIFT LEVER KNOB SUB-ASSEMBLY (for 4WD) (See page IP-32)
41. INSTALL PARKING BRAKE HOLE COVER SUB-ASSEMBLY (See page IP-32)
42. INSTALL RADIO RECEIVER ASSEMBLY (See page AV-56)
43. INSTALL INTEGRATION CONTROL AND PANEL ASSEMBLY (See page IP-32)
44. INSTALL INSTRUMENT PANEL GARNISH LH (See page IP-33)
45. INSTALL INSTRUMENT PANEL GARNISH RH (See page IP-33)
46. INSTALL FRONT PILLAR GARNISH RH (See page IR-43)

47. INSTALL FRONT PILLAR GARNISH LH (See page IR-43)
48. INSTALL ASSIST GRIP ASSEMBLY (See page IR-43)
49. INSTALL ASSIST GRIP PLUG (See page IR-44)
50. INSTALL FRONT DOOR OPENING TRIM WEATHERSTRIP LH (See page IP-33)
51. INSTALL FRONT DOOR OPENING TRIM WEATHERSTRIP RH (See page IP-33)
52. INSTALL COWL SIDE TRIM BOARD RH (See page IR-45)
53. INSTALL COWL SIDE TRIM BOARD LH (See page IR-45)
54. INSTALL FOOTREST CLIP (See page IR-2)
55. INSTALL FRONT FLOOR FOOTREST (See page IR-2)
56. INSTALL FRONT DOOR SCUFF PLATE RH (See page IR-45)
57. INSTALL FRONT DOOR SCUFF PLATE LH (See page IR-45)
58. INSTALL COMBINATION SWITCH ASSEMBLY (See page SR-17)
59. INSTALL UPPER STEERING COLUMN COVER (See page SR-17)
60. INSTALL LOWER STEERING COLUMN COVER (See page SR-18)
61. INSTALL STEERING WHEEL ASSEMBLY (See page SR-18)
62. INSTALL STEERING PAD (See page RS-346)
63. INSTALL LOWER NO. 2 STEERING WHEEL COVER (See page RS-347)
64. INSTALL LOWER NO. 3 STEERING WHEEL COVER (See page RS-347)
65. CONNECT HEATER WATER OUTLET HOSE A (FROM HEATER UNIT) (See page AC-56)
66. CONNECT HEATER INLET WATER HOSE (See page AC-56)
67. INSTALL COOLER REFRIGERANT LIQUID PIPE A (See page AC-57)
68. INSTALL COOLER REFRIGERANT SUCTION PIPE A (See page AC-57)
69. INSTALL COWL TOP VENTILATOR LOUVER LH (See page WW-30)
70. INSTALL COWL TOP VENTILATOR LOUVER RH (See page WW-30)

71. INSTALL COWL TOP VENTILATOR LOUVER SUB-ASSEMBLY (See page WW-31)
72. INSTALL FRONT FENDER SIDE PANEL UPPER LH (See page WW-31)
73. INSTALL FRONT FENDER SIDE PANEL UPPER RH (See page WW-31)
74. INSTALL ANTENNA ORNAMENT (See page WW-31)
75. INSTALL ROOF ANTENNA POLE SUB-ASSEMBLY (See page AV-116)
76. INSTALL FRONT WIPER ARM AND BLADE ASSEMBLY LH (See page WW-32)
77. INSTALL FRONT WIPER ARM AND BLADE ASSEMBLY RH (CENTER SIDE) (See page WW-32)
78. INSTALL FRONT WIPER ARM AND BLADE ASSEMBLY RH (See page WW-33)
79. INSTALL WINDSHIELD WIPER ARM COVER (See page WW-34)
80. ADD ENGINE COOLANT (See page CO-3)
81. CONNECT CABLE TO NEGATIVE BATTERY TERMINAL
    Torque: 3.9 N*m (40 kgf*cm, 35 in.*lbf)
82. CHECK SRS WARNING LIGHT
    RS-29
83. CHARGE REFRIGERANT (See page AC-16)
84. WARM UP ENGINE (See page AC-18)
85. CHECK FOR ENGINE COOLANT LEAKAGE (See page CO-4)
86. CHECK FOR REFRIGERANT LEAKAGE (See page AC-18)
87. POSITION FRONT WHEELS FACING STRAIGHT AHEAD

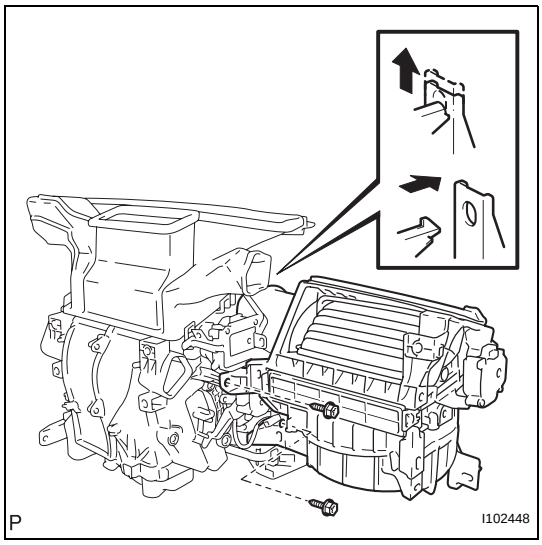

AC

INSTALLATION

1. **INSTALL BLOWER UNIT ASSEMBLY**
   (a) Install the 2 screws and blower unit as shown in the illustration.
2. **INSTALL INSTRUMENT PANEL REINFORCEMENT (See page AC-49)**
3. **INSTALL COOLER UNIT DRAIN HOSE (See page AC-51)**
4. **INSTALL MAIN BODY ECU (DRIVER SIDE J/B) (See page AC-52)**
5. **INSTALL INSTRUMENT PANEL SIDE BRACKET (See page AC-52)**
6. **INSTALL STEERING COLUMN ASSEMBLY (See page SR-16)**
7. **INSTALL STEERING INTERMEDIATE SHAFT ASSEMBLY (See page AC-52)**
8. **INSTALL STEERING COLUMN HOLE COVER (See page SR-17)**
9. **INSTALL ECM (See page ES-447)**
10. **INSTALL NO. 1 INSTRUMENT PANEL BRACE BRACKET (See page AC-52)**
11. **INSTALL NO. 1 AIR DUCT (See page AC-53)**
12. **INSTALL NO. 2 AIR DUCT (See page AC-53)**
13. **INSTALL REAR NO. 1 AIR DUCT (See page AC-53)**
14. **INSTALL REAR NO. 2 AIR DUCT (See page AC-53)**
15. **INSTALL NO. 1 HEATER TO REGISTER DUCT (See page AC-54)**
16. **INSTALL NO. 2 HEATER TO REGISTER DUCT (See page AC-54)**
17. **INSTALL INSTRUMENT PANEL SUB-ASSEMBLY (See page IP-26)**
18. **CONNECT PASSENGER AIRBAG CONNECTOR (See page IP-26)**
19. **INSTALL INSTRUMENT PANEL FINISH PANEL END LH (See page IP-27)**
20. **INSTALL ASSIST GRIP RETAINER RH (See page IP-27)**
21. **INSTALL ASSIST GRIP RETAINER LH (See page IP-27)**
22. **INSTALL FRONT NO. 2 SPEAKER ASSEMBLY (See page AV-62)**
23. **INSTALL NO. 2 INSTRUMENT PANEL SPEAKER PANEL SUB-ASSEMBLY (See page IP-27)**

24. INSTALL NO. 1 INSTRUMENT PANEL SPEAKER PANEL SUB-ASSEMBLY (See page IP-27)
25. INSTALL NO. 2 INSTRUMENT PANEL REGISTER ASSEMBLY (See page IP-27)
26. INSTALL INSTRUMENT PANEL LOWER FINISH PANEL SUB-ASSEMBLY RH (See page IP-28)
27. INSTALL GLOVE COMPARTMENT DOOR ASSEMBLY (See page IP-28)
28. INSTALL COMBINATION METER ASSEMBLY (See page IP-28)
29. INSTALL INSTRUMENT CLUSTER FINISH PANEL (See page IP-29)
30. INSTALL LOWER INSTRUMENT PANEL LH (See page IP-29)
31. INSTALL LOWER INSTRUMENT PANEL FINISH PANEL SUB-ASSEMBLY LH (See page IP-29)
32. CONNECT HOOD LOCK CONTROL LEVER SUB-ASSEMBLY (See page IP-30)
33. INSTALL NO. 1 INSTRUMENT PANEL REGISTER ASSEMBLY (See page IP-30)
34. INSTALL INSTRUMENT LOWER COVER SUB-ASSEMBLY (See page IP-30)
35. INSTALL CONSOLE UPPER PANEL NO. 1 GARNISH (See page IP-31)
36. INSTALL FRONT CONSOLE BOX (See page IP-31)
37. INSTALL BOX BOTTOM MAT (See page IP-31)
38. INSTALL CONSOLE UPPER REAR PANEL SUB-ASSEMBLY (See page IP-31)
39. INSTALL SHIFT LEVER KNOB SUB-ASSEMBLY (for Manual Transmission) (See page IP-32)
40. INSTALL SHIFT LEVER KNOB SUB-ASSEMBLY (for 4WD) (See page IP-32)
41. INSTALL PARKING BRAKE HOLE COVER SUB-ASSEMBLY (See page IP-32)
42. INSTALL RADIO RECEIVER ASSEMBLY (See page AV-56)
43. INSTALL INTEGRATION CONTROL AND PANEL ASSEMBLY (See page IP-32)
44. INSTALL INSTRUMENT PANEL GARNISH LH (See page IP-33)
45. INSTALL INSTRUMENT PANEL GARNISH RH (See page IP-33)
46. INSTALL FRONT PILLAR GARNISH RH (See page IR-43)

47. INSTALL FRONT PILLAR GARNISH LH (See page IR-43)
48. INSTALL ASSIST GRIP ASSEMBLY (See page IR-43)
49. INSTALL ASSIST GRIP PLUG (See page IR-44)
50. INSTALL FRONT DOOR OPENING TRIM WEATHERSTRIP LH (See page IP-33)
51. INSTALL FRONT DOOR OPENING TRIM WEATHERSTRIP RH (See page IP-33)
52. INSTALL COWL SIDE TRIM BOARD RH (See page IR-45)
53. INSTALL COWL SIDE TRIM BOARD LH (See page IR-45)
54. INSTALL FOOTREST CLIP (See page IR-2)
55. INSTALL FRONT FLOOR FOOTREST (See page IR-2)
56. INSTALL FRONT DOOR SCUFF PLATE RH (See page IR-45)
57. INSTALL FRONT DOOR SCUFF PLATE LH (See page IR-45)
58. INSTALL COMBINATION SWITCH ASSEMBLY (See page SR-17)
59. INSTALL UPPER STEERING COLUMN COVER (See page SR-17)
60. INSTALL LOWER STEERING COLUMN COVER (See page SR-18)
61. INSTALL STEERING WHEEL ASSEMBLY (See page SR-18)
62. INSTALL STEERING PAD (See page RS-346)
63. INSTALL LOWER NO. 2 STEERING WHEEL COVER (See page RS-347)
64. INSTALL LOWER NO. 3 STEERING WHEEL COVER (See page RS-347)
65. CONNECT HEATER WATER OUTLET HOSE A (FROM HEATER UNIT) (See page AC-56)
66. CONNECT HEATER INLET WATER HOSE (See page AC-56)
67. INSTALL COOLER REFRIGERANT LIQUID PIPE A (See page AC-57)
68. INSTALL COOLER REFRIGERANT SUCTION PIPE A (See page AC-57)
69. INSTALL COWL TOP VENTILATOR LOUVER LH (See page WW-30)
70. INSTALL COWL TOP VENTILATOR LOUVER RH (See page WW-30)

71. INSTALL COWL TOP VENTILATOR LOUVER SUB-ASSEMBLY (See page WW-31)
72. INSTALL FRONT FENDER SIDE PANEL UPPER LH (See page WW-31)
73. INSTALL FRONT FENDER SIDE PANEL UPPER RH (See page WW-31)
74. INSTALL ANTENNA ORNAMENT (See page WW-31)
75. INSTALL ROOF ANTENNA POLE SUB-ASSEMBLY (See page AV-116)
76. INSTALL FRONT WIPER ARM AND BLADE ASSEMBLY LH (See page WW-32)
77. INSTALL FRONT WIPER ARM AND BLADE ASSEMBLY RH (CENTER SIDE) (See page WW-32)
78. INSTALL FRONT WIPER ARM AND BLADE ASSEMBLY RH (See page WW-33)
79. INSTALL WINDSHIELD WIPER ARM COVER (See page WW-34)
80. ADD ENGINE COOLANT (See page CO-3)
81. CONNECT CABLE TO NEGATIVE BATTERY TERMINAL
    Torque: 3.9 N*m (40 kgf*cm, 35 in.*lbf)
82. CHECK SRS WARNING LIGHT
    RS-29
83. CHARGE REFRIGERANT (See page AC-16)
84. WARM UP ENGINE (See page AC-18)
85. CHECK FOR ENGINE COOLANT LEAKAGE (See page CO-4)
86. CHECK FOR REFRIGERANT LEAKAGE (See page AC-18)
87. POSITION FRONT WHEELS FACING STRAIGHT AHEAD

BLOWER MOTOR

COMPONENTS

AC

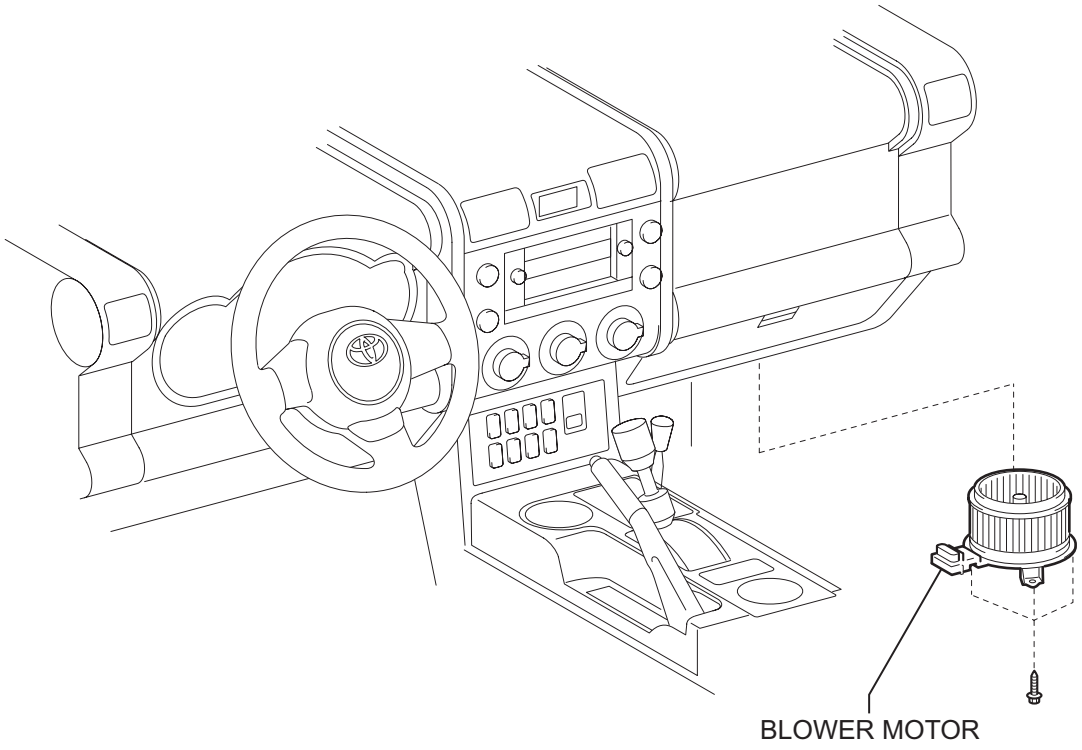

T

I102496E01

REMOVAL

1. **DISCONNECT CABLE FROM NEGATIVE BATTERY TERMINAL**

2. **REMOVE BLOWER MOTOR**
   (a) Disconnect the connector and the clamp.
   (b) Remove the 3 screws and the blower motor.

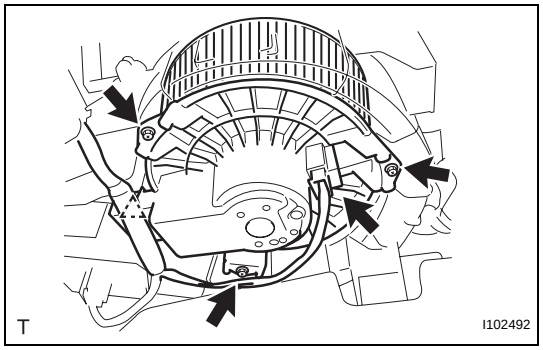

INSPECTION

1. **INSPECT BLOWER MOTOR**
   (a) Connect the positive (+) lead from the battery to terminal 2 and the negative (-) lead to terminal 1, then check that the motor operates smoothly.
   OK:
   The motor operates smoothly.
   If the operation is not as specified, replace the blower motor.
   (b) Measure the current.
   Standard current

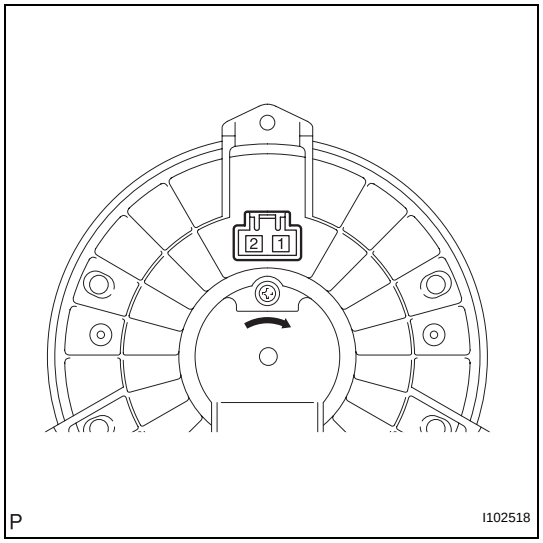

Tester Connection	Condition	Specified Condition
1 - 2	Blower motor operates	1 to 3.5 A

If the current value is not as specified, replace the blower motor.

INSTALLATION

1. **INSTALL BLOWER MOTOR**
   (a) Install the blower motor with the 3 screws.
   (b) Connect the connector and the clamp.

2. **CONNECT CABLE TO NEGATIVE BATTERY TERMINAL**
   Torque: 3.9 N*m (40 kgf*cm, 35 in.*lbf)

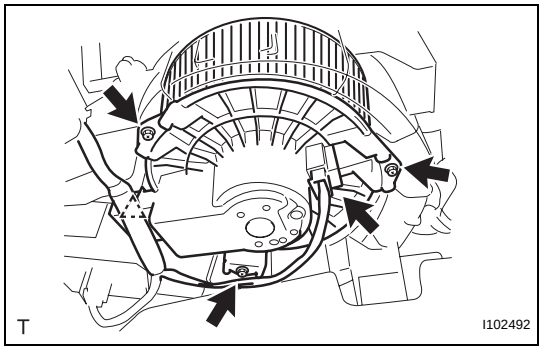

BLOWER RESISTOR

COMPONENTS

AC

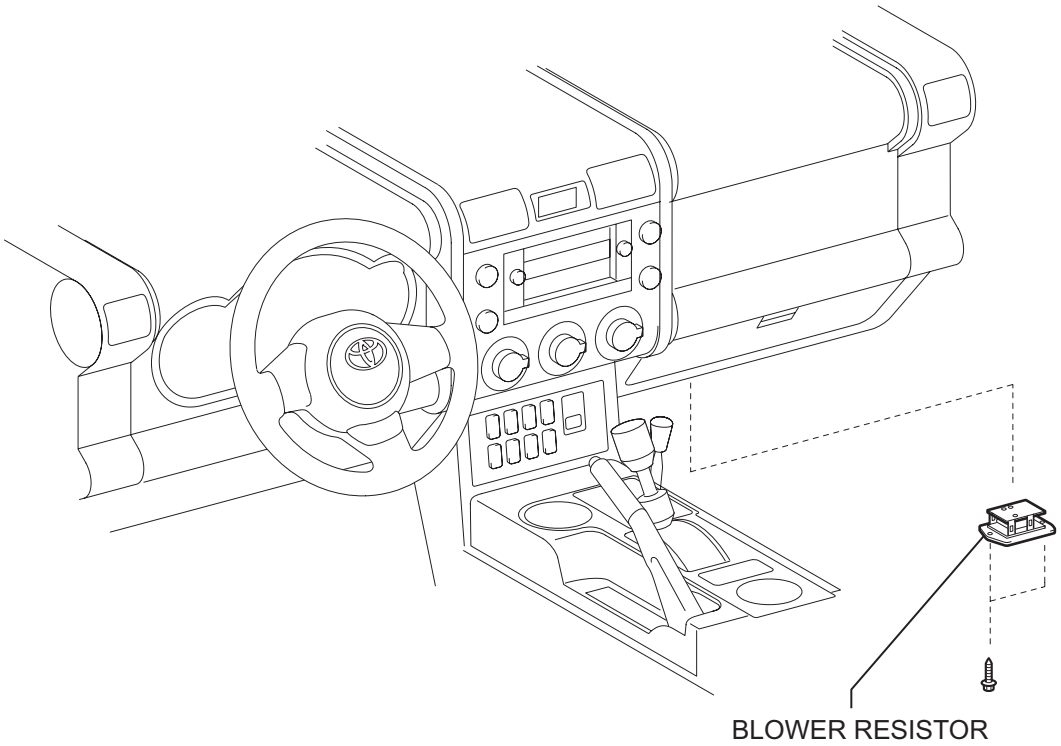

T

I102495E01

REMOVAL

1. **DISCONNECT CABLE FROM NEGATIVE BATTERY TERMINAL**

2. **REMOVE BLOWER RESISTOR**
   (a) Disconnect the connector.
   (b) Remove the 2 screws and the blower resistor.

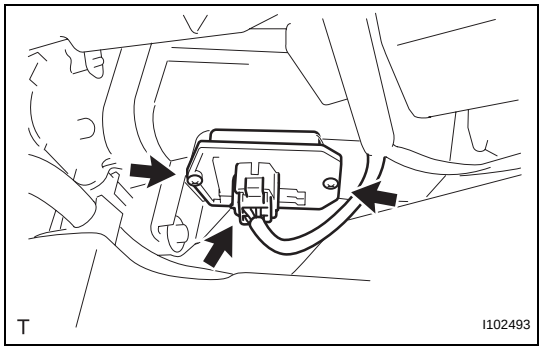

INSPECTION

1. **INSPECT BLOWER RESISTOR**
   (a) Measure the resistance.
   Standard resistance

Tester connection	Specified condition
1 - 2	0.83 to 0.95 Ω
1 - 3	0.31 to 0.35 Ω
1 - 4	1.76 to 2.02 Ω

   If the resistance value is not as specified, replace the blower resistor.

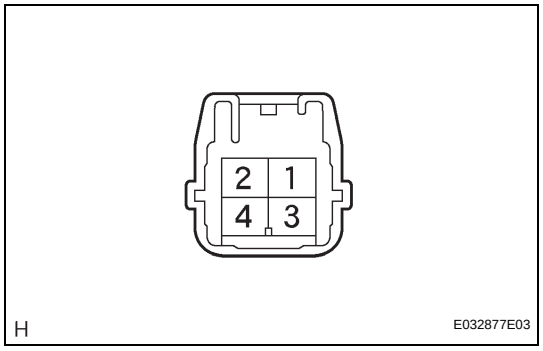

INSTALLATION

1. **INSTALL BLOWER RESISTOR**
   (a) Install the blower resistor with the 2 screws.
   (b) Connect the connector.

2. **CONNECT CABLE TO NEGATIVE BATTERY TERMINAL**
   Torque: 3.9 N*m (40 kgf*cm, 35 in.*lbf)

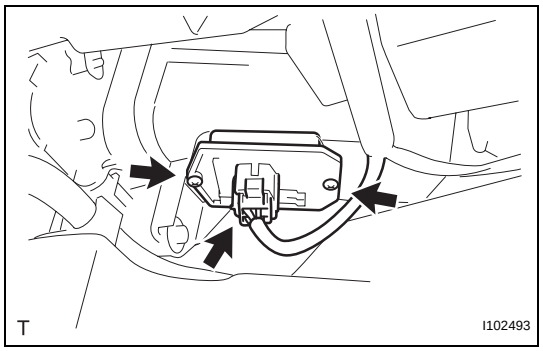

COMPRESSOR AND MAGNETIC CLUTCH

COMPONENTS

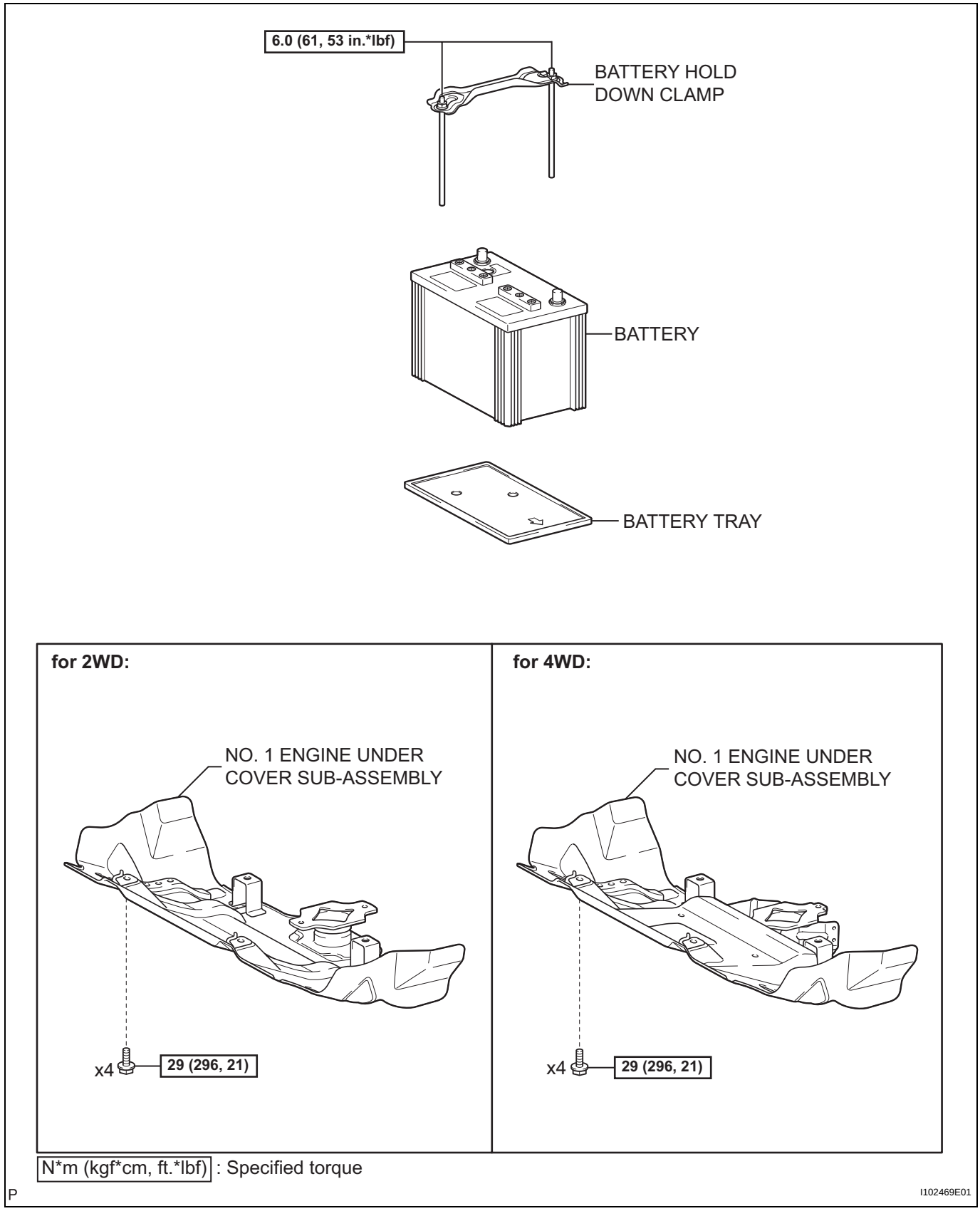

N*m (kgf*cm, ft.*lbf) : Specified torque

I102469E01

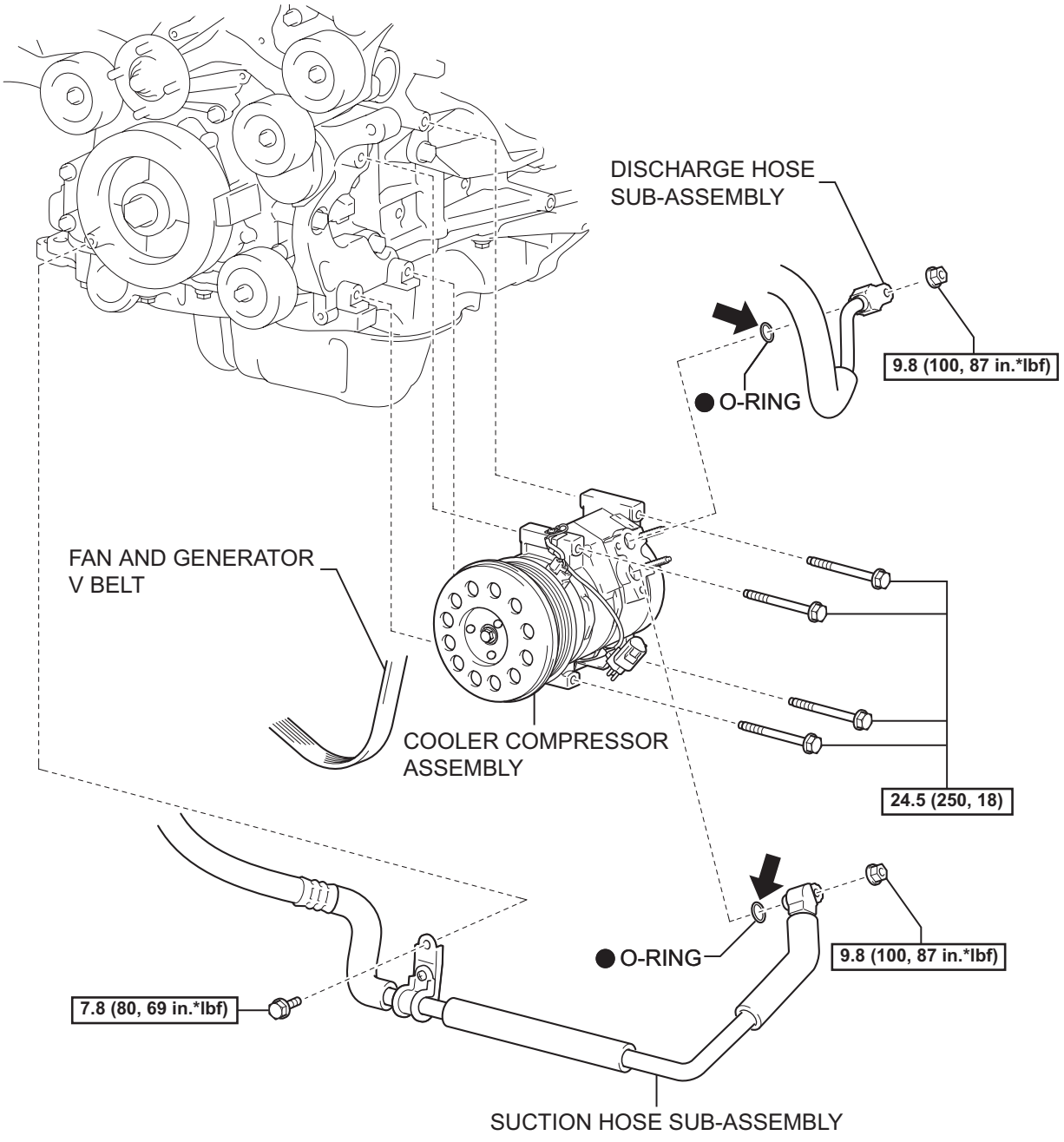

N*m (kgf*cm, ft.*lbf) : Specified torque

Compressor Oil ND-8 or equivalent ● Non-reusable part

P

I102470E01

AC

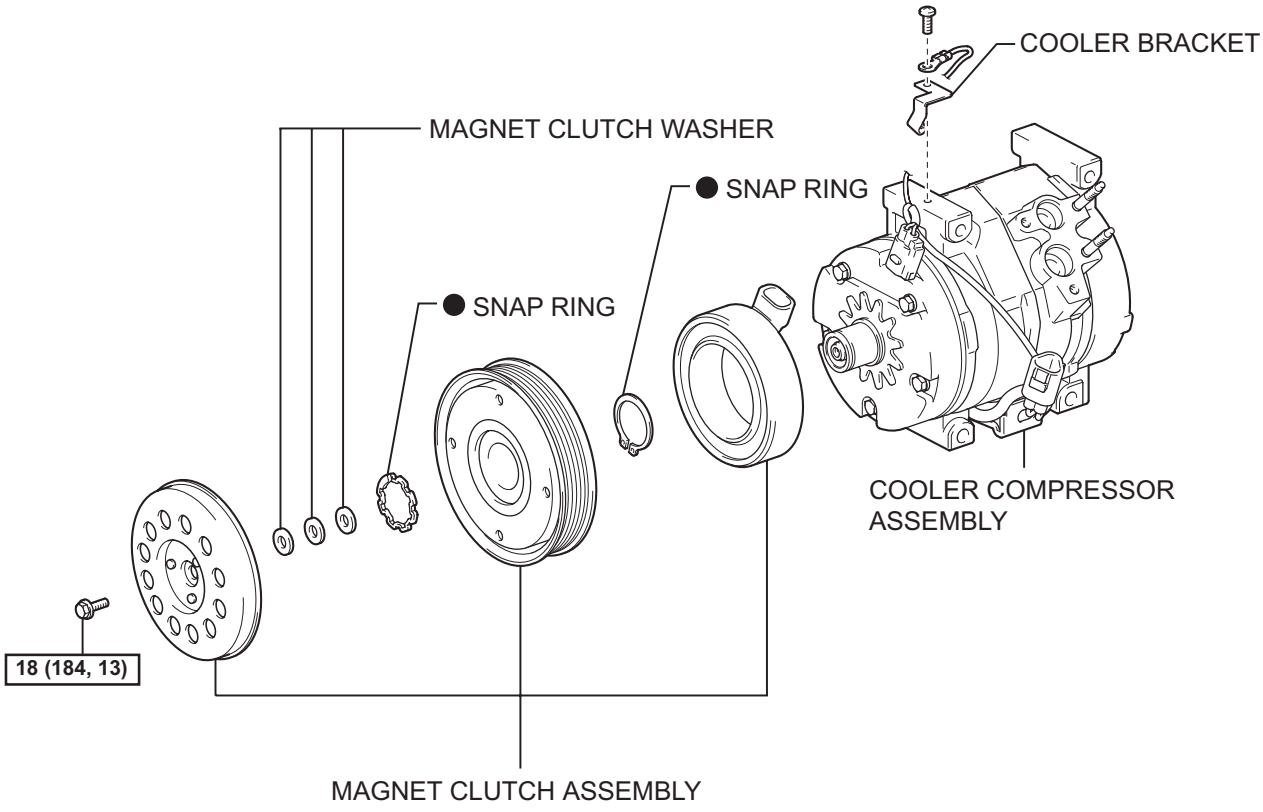

N*m (kgf*cm, ft.*lbf) : Specified torque ● Non-reusable part

P

I102471E01

REMOVAL

1. **DISCHARGE REFRIGERANT FROM REFRIGERATION SYSTEM (See page AC-16)**
2. **DISCONNECT CABLE FROM NEGATIVE BATTERY TERMINAL**
3. **REMOVE BATTERY HOLD DOWN CLAMP**
4. **REMOVE BATTERY**
5. **REMOVE BATTERY TRAY**
6. **REMOVE NO. 1 ENGINE UNDER COVER SUB-ASSEMBLY (See page EM-6)**
7. **REMOVE FAN AND GENERATOR V BELT (See page EM-6)**

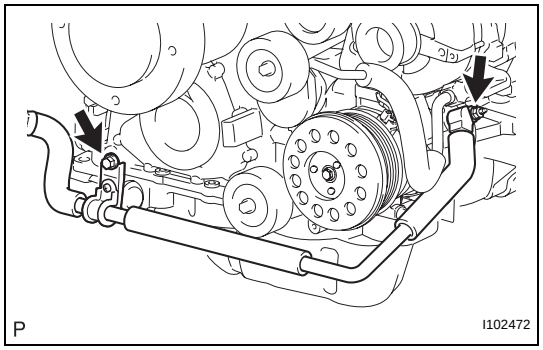

8. **DISCONNECT SUCTION HOSE SUB-ASSEMBLY**
   (a) Remove the bolt and separate the suction hose.
   (b) Remove the nut and disconnect the suction hose.
   (c) Remove the O-ring from the suction hose.
   NOTICE:
   Seal the openings of the disconnected parts using vinyl tape to prevent moisture and foreign matter from entering.

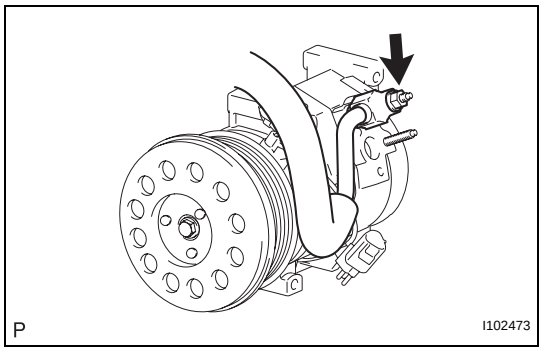

9. **DISCONNECT DISCHARGE HOSE SUB-ASSEMBLY**
   (a) Remove the nut and disconnect the discharge hose.
   (b) Remove the O-ring from the discharge hose.
   NOTICE:
   Seal the openings of the disconnected parts using vinyl tape to prevent moisture and foreign matter from entering.

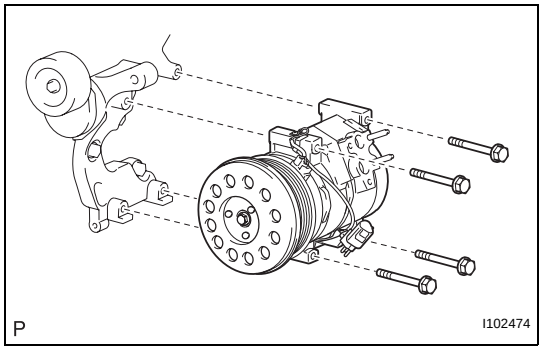

10. **REMOVE COOLER COMPRESSOR ASSEMBLY**
    (a) Disconnect the connector.
    (b) Remove the 4 bolts and compressor.

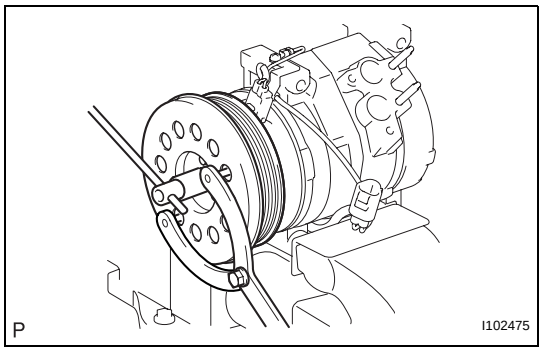

DISASSEMBLY

1. REMOVE MAGNET CLUTCH ASSEMBLY

(a) Clamp the cooler compressor in a vise.

(b) Using SST, hold the magnet clutch hub.
SST 09960-10010 (09962-01000, 09963-00500)

(c) Remove the bolt, magnet clutch hub and magnet clutch washer.
HINT:
There is no set number of magnet clutch washers since they are used for adjusting.

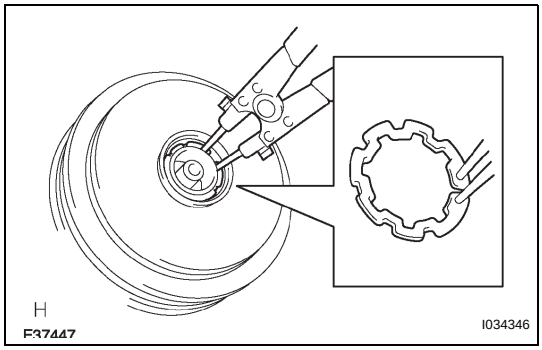

(d) Using a snap ring expander, remove the snap ring and the magnet clutch rotor.
NOTICE:
Do not damage the seal cover of the bearing when removing the snap ring.

(e) Disconnect the connector.

(f) Using a snap ring expander, remove the snap ring and magnet clutch stator.

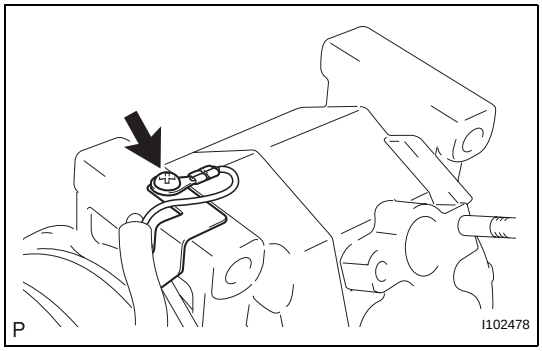

2. REMOVE COOLER BRACKET

(a) Remove the screw and the cooler bracket.

INSPECTION

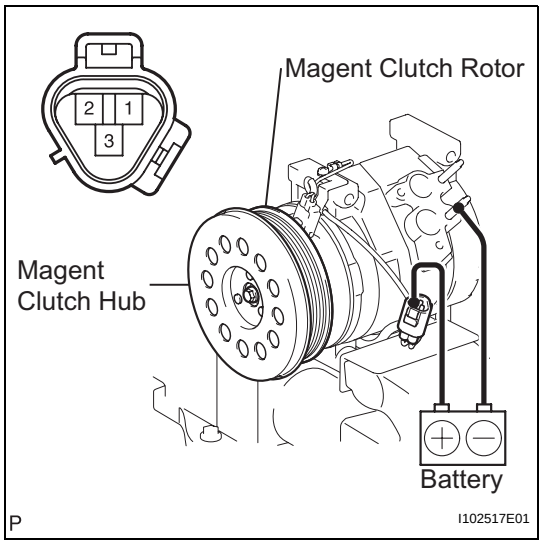

1. INSPECT MAGNET CLUTCH ASSEMBLY

(a) Check the magnet clutch operation.

(1) Confirm that the magnet clutch hub and magnet clutch rotor lock when the battery positive lead is connected to terminal 3 (MG+) of the magnet clutch, and the negative lead is connected to the earth wire.
If the operation is not as specified, replace the magnet clutch assembly.

(b) Measure the resistance.

(c) Measure the resistance between terminals 1 and 2.
Standard resistance:
165 to 205 Ω at 25°C (77°F)
If the resistance is not as specified, replace the cooler compressor assembly.

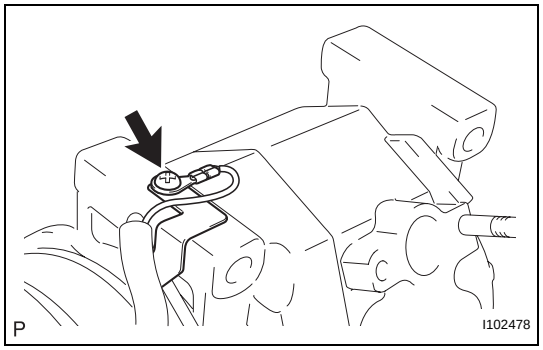

REASSEMBLY

1. INSTALL COOLER BRACKET

(a) Install the cooler bracket with the screw.

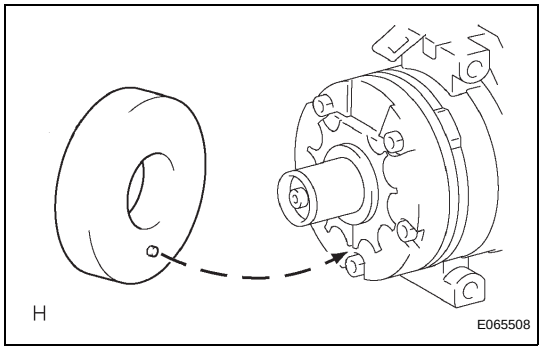

2. INSTALL MAGNET CLUTCH ASSEMBLY

SST 09960-10010 (09962-01000, 09963-00500)

(a) Install the magnet clutch stator with the parts shown in the illustration matched.

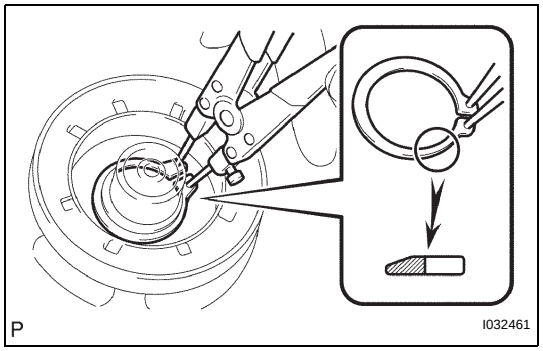

(b) Using a snap ring expander, install a new snap ring with the chamfered side facing up.

(c) Connect the connector.

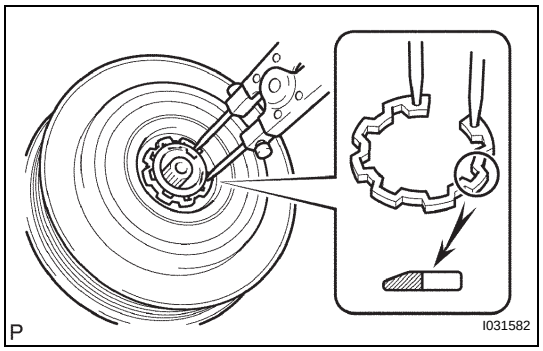

(d) Using SST, install the magnet clutch rotor and a new snap ring with the chamfered side facing up.

NOTICE:

Do not damage the seal cover of the bearing when installing the snap ring.

(e) Install the compressor spacer and magnet clutch hub.

NOTICE:

Do not change the combination of the compressor spacer used before disassembly.

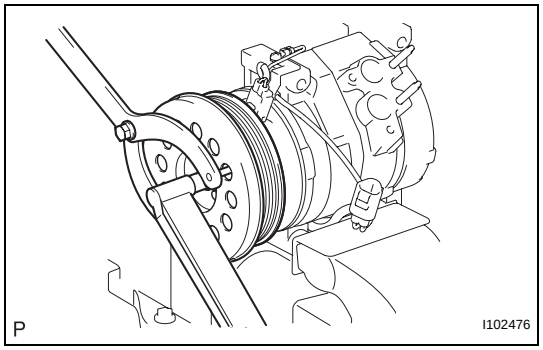

(f) Using SST, hold the magnet clutch hub and install the bolt.

SST 09960-10010 (09962-01000, 09963-00500)

Torque: 18 N*m (184 kgf*cm, 13 ft.*lbf)

NOTICE:

Make sure that there is no foreign matter or oil on the compressor shaft, bolt, and clutch hub.

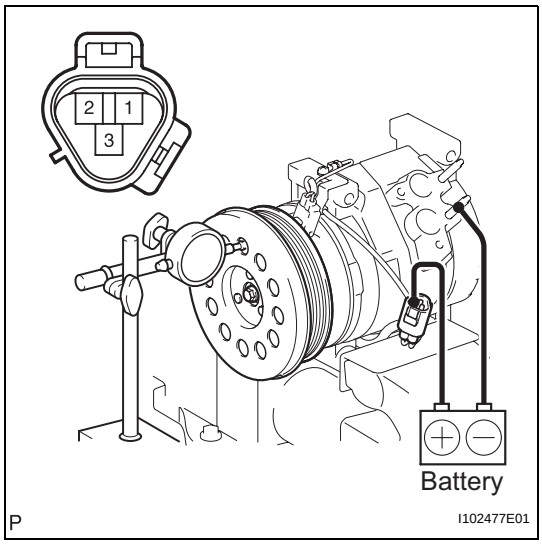

3. INSPECT MAGNET CLUTCH CLEARANCE

(a) Clamp the cooler compressor in a vise.

(b) Set the dial indicator to the magnet clutch hub.

(c) Connect the battery positive lead to terminal 3 (MG+) of the magnet clutch connector and the negative lead to the earth wire. Turn the magnet clutch on and off and measure the clearance.

Standard clearance:

0.35 to 0.60 mm (0.014 to 0.024 in.)

If the measured value is not within the standard clearance, remove the magnet clutch hub and adjust the clearance using compressor spacer to obtain the standard clearance.

Compressor spacer thickness:

0.1 mm (0.004 in.)
0.3 mm (0.012 in.)
0.5 mm (0.020 in.)

NOTICE:

Adjustment should be performed with 3 or less magnet clutch washers.

(d) Remove the cooler compressor from the vise.

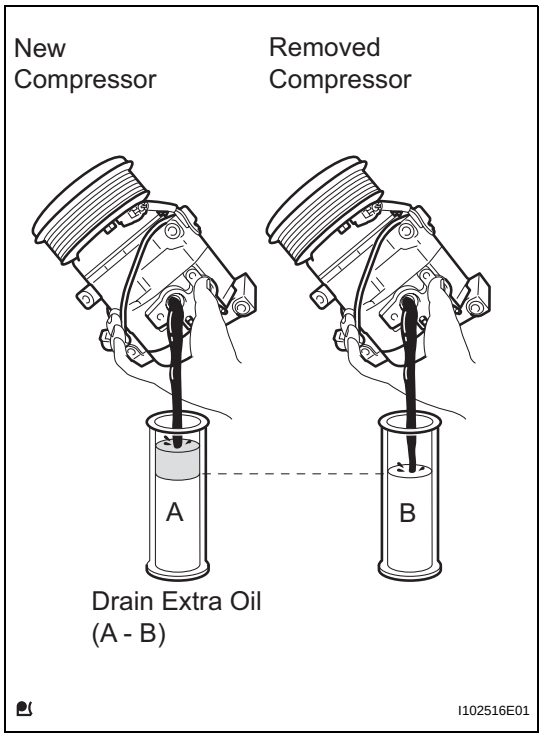

INSTALLATION

1. ADJUST COMPRESSOR OIL

(a) When replacing the compressor with a new one, gradually discharge the refrigerant gas from the service valve. Then drain the following amount of oil from the new compressor before installation, so that the amount of oil contained in it is the same as that in the compressor to be replaced.

HINT:

New compressors are filled with sufficient oil for the whole cycle. Therefore, it is necessary to drain residual oil from the condenser and cooling unit.

Standard:

(The amount of oil inside a new compressor: 120 (+15) cc (4.1 (+0.51) fl.oz.)) - (The amount of oil remaining in the removed compressor) = The amount of oil to be removed when replacing the compressor

NOTICE:

- **When checking the compressor oil level, observe the precautions for cooler removal/ installation.**
- **If a new compressor is installed without removing the amount of oil remaining in the pipes of the vehicle, the amount of oil becomes too large. This prevents heat exchange in the refrigerant cycle and causes refrigeration failure.**
- **If the amount of oil remaining in the removed compressor is too small, check for oil leakage.**
- **Use ND-OIL8 compressor oil.**

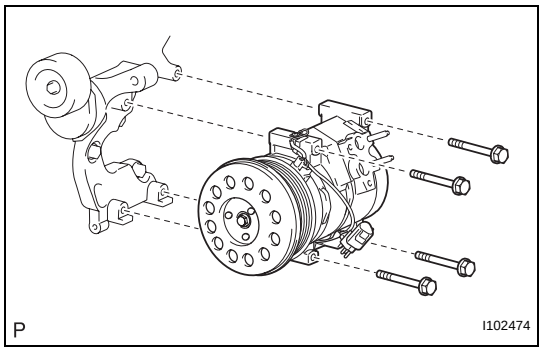

2. **INSTALL COOLER COMPRESSOR ASSEMBLY**
   (a) Install the compressor with the 4 bolts.
   Torque: 24.5 N*m (250 kgf*cm, 18 ft.*lbf)
   (b) Connect the connector.

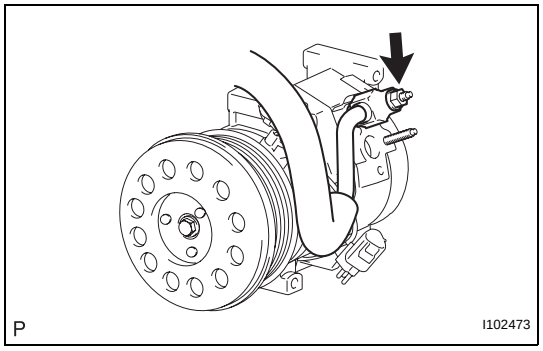

3. **INSTALL DISCHARGE HOSE SUB-ASSEMBLY**
   (a) Remove the attached vinyl tape from the hose.
   (b) Apply sufficient compressor oil (ND-OIL8) to a new O-ring and the fitting surface of the compressor.
   Compressor oil:
   ND-OIL8 or the equivalent
   (c) Install the O-ring onto the discharge hose.
   (d) Install the discharge hose onto the compressor with the nut.
   Torque: 9.8 N*m (100 kgf*cm, 87 in.*lbf)

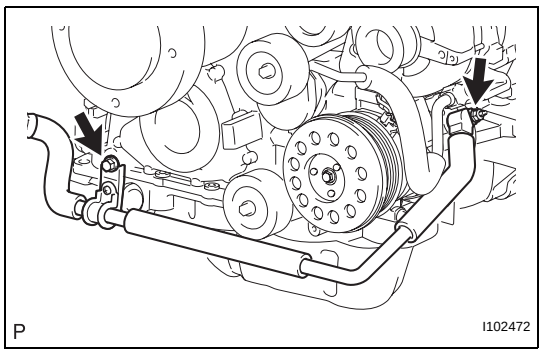

4. **INSTALL SUCTION HOSE SUB-ASSEMBLY**
   (a) Remove the attached vinyl tape from the hose.
   (b) Apply sufficient compressor oil (ND-OIL8) to a new O-ring and the fitting surface of the compressor.
   Compressor oil:
   ND-OIL8 or the equivalent
   (c) Install the O-ring onto the suction hose.
   (d) Install the suction hose onto the compressor with the nut.
   Torque: 9.8 N*m (100 kgf*cm, 87 in.*lbf)
   (e) Install the suction hose with the bolt.
   Torque: 7.8 N*m (80 kgf*cm, 69 in.*lbf)

5. **INSTALL FAN AND GENERATOR V BELT (See page EM-6)**

6. **INSTALL NO. 1 ENGINE UNDER COVER SUB-ASSEMBLY**

7. **INSTALL BATTERY TRAY**

8. **INSTALL BATTERY**

9. **INSTALL BATTERY HOLD DOWN CLAMP**
   Torque: 6.0 N*m (61 kgf*cm, 53 in.*lbf)

10. **CONNECT CABLE TO NEGATIVE BATTERY TERMINAL**
    Torque: 3.9 N*m (40 kgf*cm, 35 in.*lbf)

11. **CHARGE REFRIGERANT (See page AC-16)**

12. **WARM UP ENGINE (See page AC-18)**

13. **CHECK FOR REFRIGERANT LEAKAGE (See page AC-18)**

AC

CONDENSER

COMPONENTS

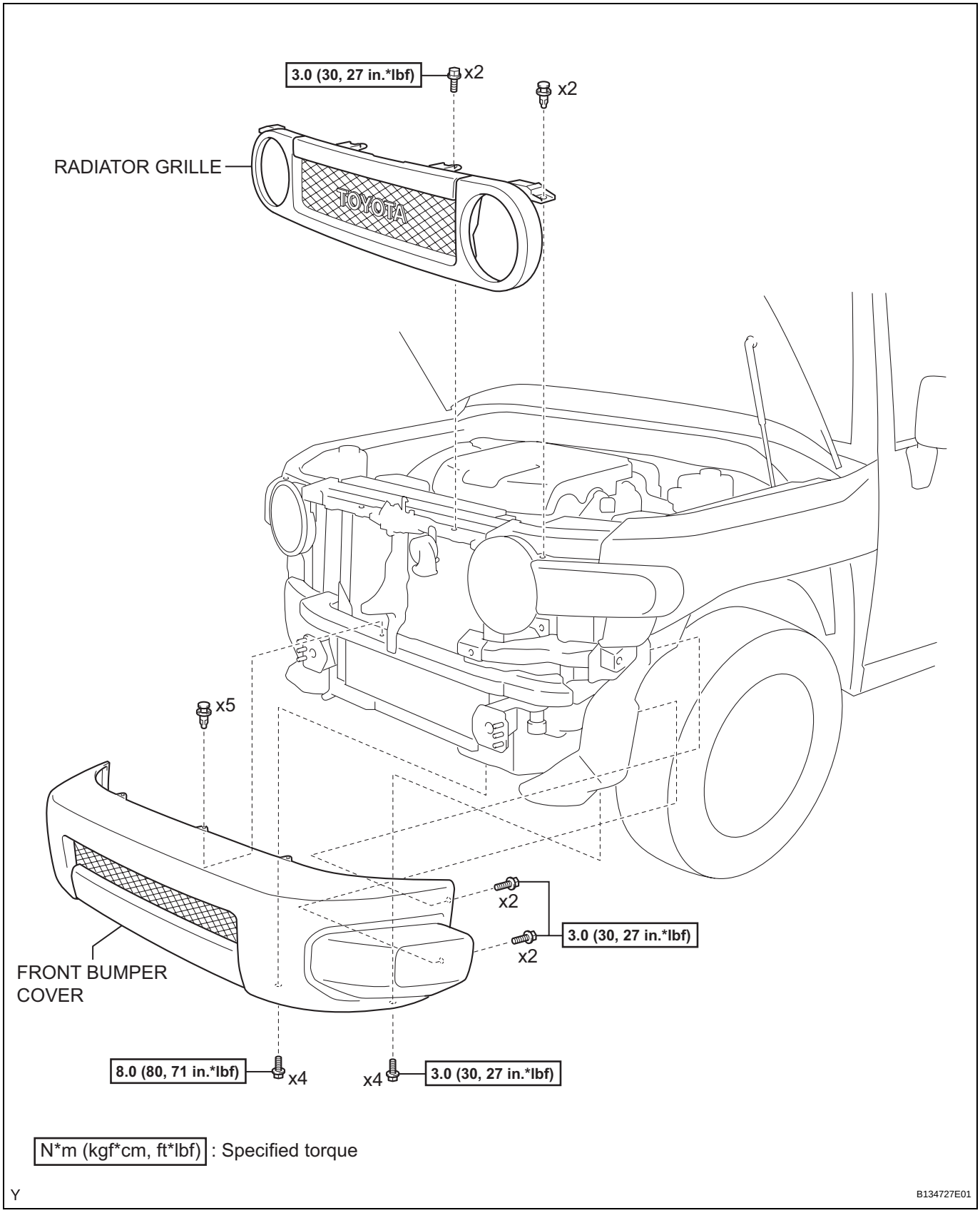

N*m (kgf*cm, ft*lbf) : Specified torque

Y

B134727E01

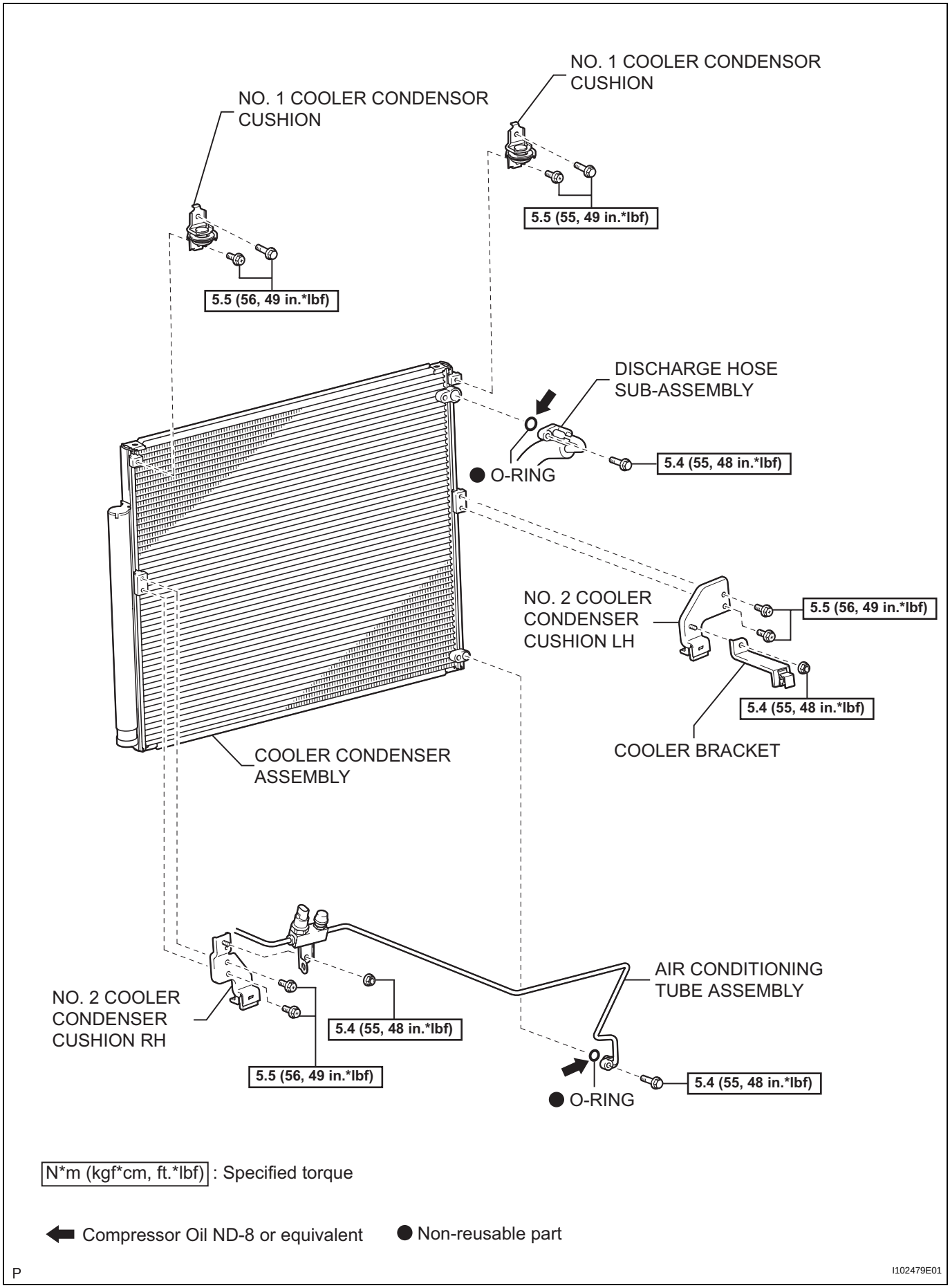
NO. 1 COOLER CONDENSOR CUSHION
NO. 1 COOLER CONDENSOR CUSHION
5.5 (55, 49 in.*lbf)
5.5 (56, 49 in.*lbf)
DISCHARGE HOSE SUB-ASSEMBLY
5.4 (55, 48 in.*lbf)
● O-RING
NO. 2 COOLER CONDENSER CUSHION LH
5.5 (56, 49 in.*lbf)
5.4 (55, 48 in.*lbf)
COOLER BRACKET
COOLER CONDENSER ASSEMBLY
NO. 2 COOLER CONDENSER CUSHION RH
5.4 (55, 48 in.*lbf)
5.5 (56, 49 in.*lbf)
AIR CONDITIONING TUBE ASSEMBLY
5.4 (55, 48 in.*lbf)
● O-RING
N*m (kgf*cm, ft.*lbf) : Specified torque
Compressor Oil ND-8 or equivalent
● Non-reusable part
P
I102479E01

AC

AC

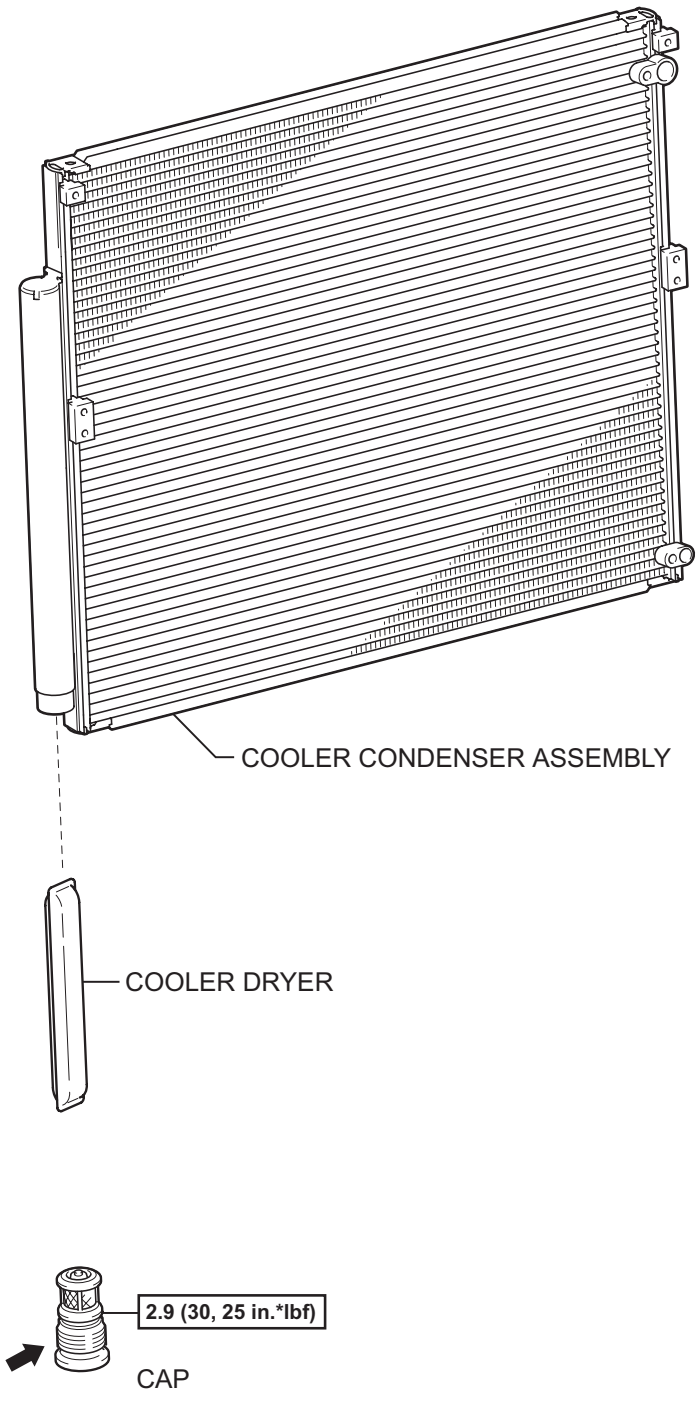

N*m (kgf*cm, ft*lbf) : Specified torque

Compressor Oil ND-8 or equivalent

P

I102480E01

ON-VEHICLE INSPECTION

1. INSPECT COOLER CONDENSER ASSEMBLY

(a) If the fins of the cooler condenser assembly are dirty, clean them with water and dry them with compressed air.

NOTICE:

Do not damage the fins of the cooler condenser assembly.

(b) If the fins of the cooler condenser assembly are bent, straighten them using a screwdriver or pliers.

2. CHECK CONDENSER FOR REFRIGERANT LEAKAGE

(a) Check the pipe joints for gas leakage, using a halogen leak detector.

(b) Check the tightening torque of the joints if gas leakage is detected from any pipe joints.

AC

REMOVAL

1. **DISCHARGE REFRIGERANT FROM REFRIGERATION SYSTEM (See page AC-16)**
2. **DISCONNECT CABLE FROM NEGATIVE BATTERY TERMINAL**
3. **REMOVE RADIATOR GRILLE (See page ET-4)**
4. **REMOVE FRONT BUMPER COVER (See page ET-4)**
5. **DISCONNECT DISCHARGE HOSE SUB-ASSEMBLY**
   (a) Remove the bolt and disconnect the discharge hose from the cooler condenser.
   (b) Remove the O-ring from the discharge hose.
   NOTICE:
   Seal the openings of the disconnected parts using vinyl tape to prevent moisture and foreign matter from entering.

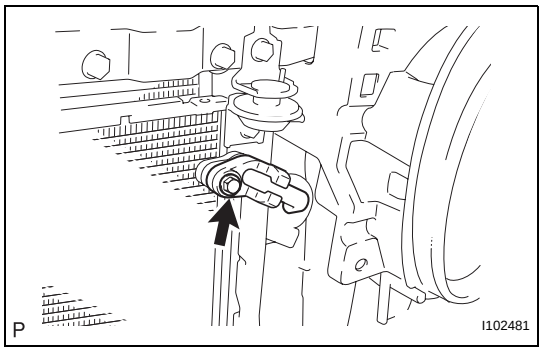

6. **DISCONNECT AIR CONDITIONING TUBE ASSEMBLY**
   (a) Remove the bolt and disconnect the air conditioning tube from the cooler condenser.
   (b) Remove the O-ring from the air conditioning tube.
   NOTICE:
   Seal the openings of the disconnected parts using vinyl tape to prevent moisture and foreign matter from entering.

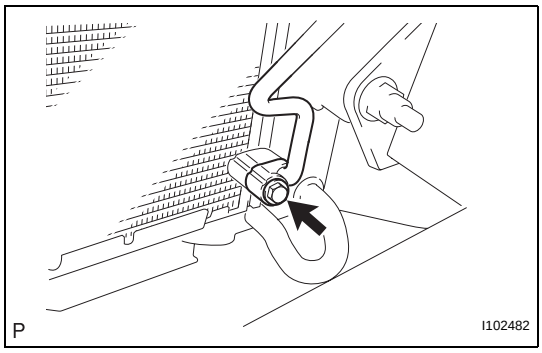

7. **REMOVE COOLER BRACKET**
   (a) Remove the nut.
   (b) Disengage the clamp and remove the cooler bracket.

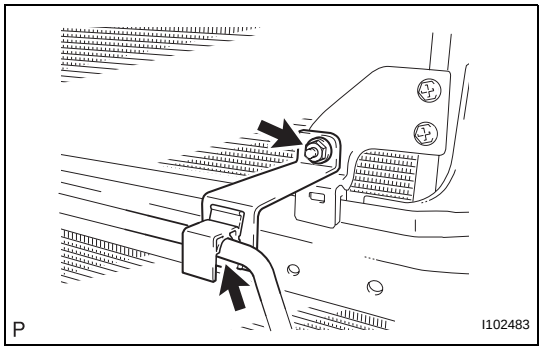

8. **REMOVE NO. 2 COOLER CONDENSER CUSHION LH**
   (a) Remove the 2 bolts and remove the cooler condenser cushion.

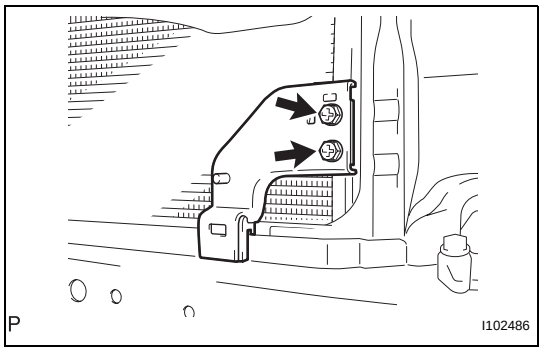

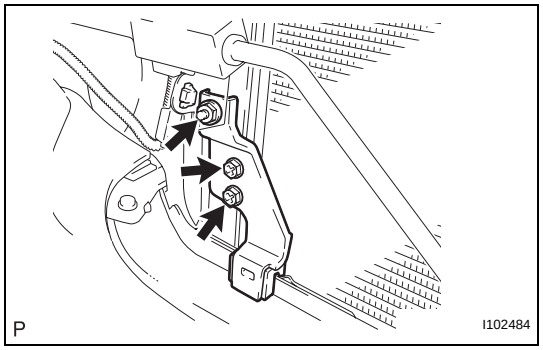

9. REMOVE NO. 2 COOLER CONDENSER CUSHION RH

(a) Remove the 2 bolts and nut and remove the cooler condenser cushion.

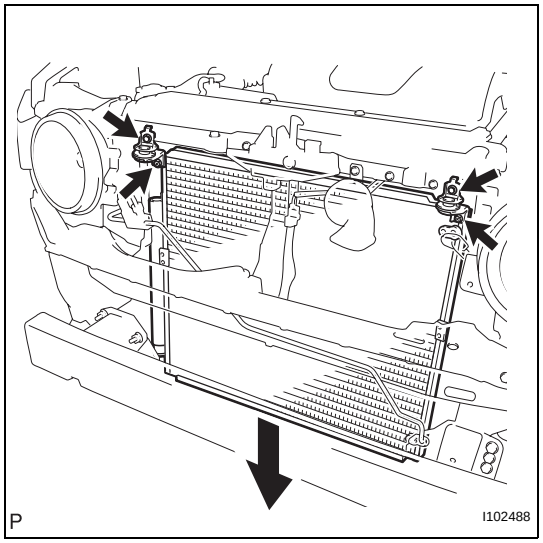

10. REMOVE COOLER CONDENSER ASSEMBLY

(a) Remove the 4 bolts and remove the cooler condenser cushion.

NOTICE:
Hold the cooler condenser by hand to prevent it from falling off when removing the cushion.

(b) Remove the condenser from the vehicle.

NOTICE:
Do not damage the condenser or radiator when removing the condenser.

AC

DISASSEMBLY

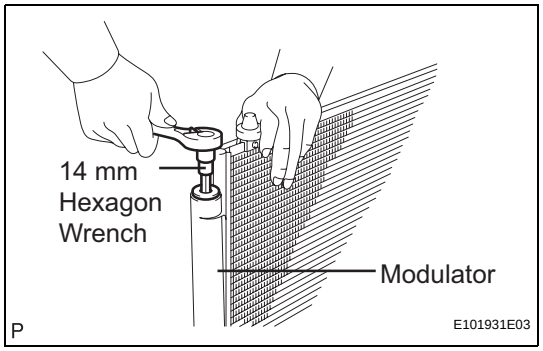

1. REMOVE COOLER DRYER

(a) Using a 14 mm straight hexagon wrench, remove the cap from the modulator.

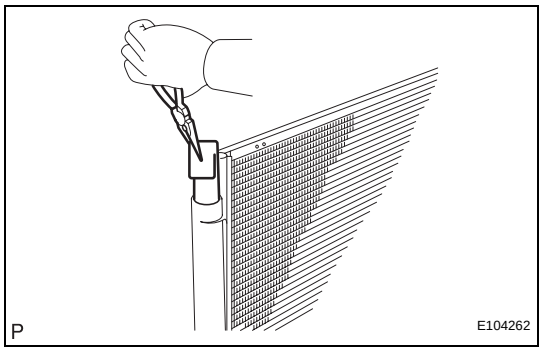

(b) Using pliers, remove the cooler dryer.

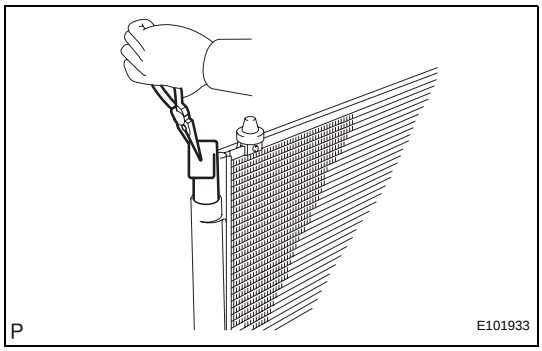

REASSEMBLY

1. INSTALL COOLER DRYER

(a) Using pliers, install the cooler dryer onto the modulator.

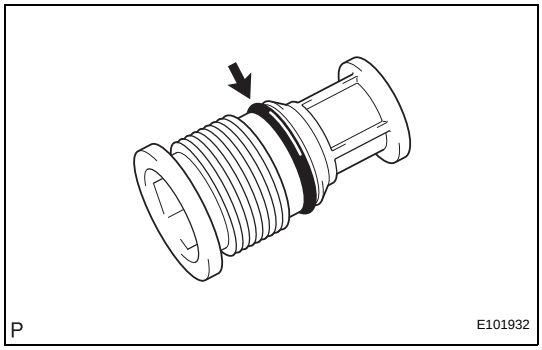

(b) Apply sufficient compressor oil to the O-ring and the fitting surface of the cap.
Compressor oil:
ND-OIL 8 or the equivalent

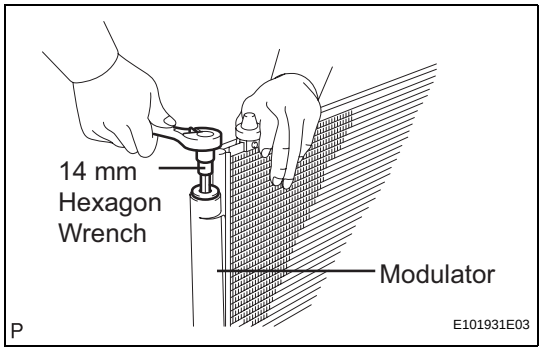

(c) Using a 14 mm straight hexagon wrench, install the cap onto the modulator.
Torque: 2.9 N*m (30 kgf*cm, 25 in.*lbf)

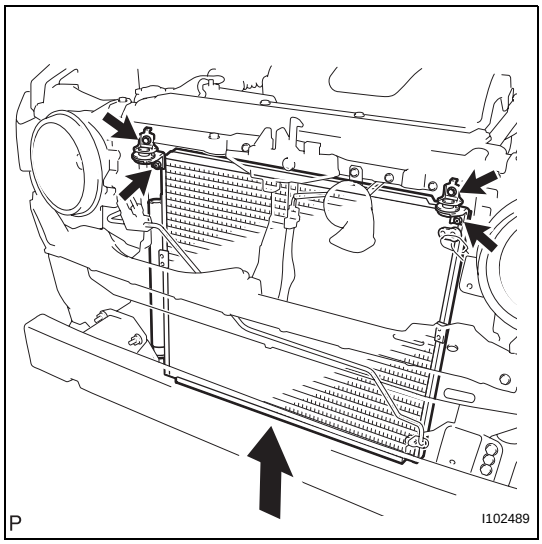

INSTALLATION

1. INSTALL COOLER CONDENSER ASSEMBLY

(a) Install the condenser into the vehicle.
NOTICE:
Do not damage the condenser or radiator when installing the condenser.
HINT:
If a new condenser is installed, add compressor oil to the condenser as follows.
Compressor oil:
ND-OIL8 or the equivalent. Add 40 cc (1.35 fl. oz.)

(b) Install the No.1 cooler condenser cushion with the 4 bolts.
Torque: 5.5 N*m (56 kgf*cm, 49 in.*lbf)

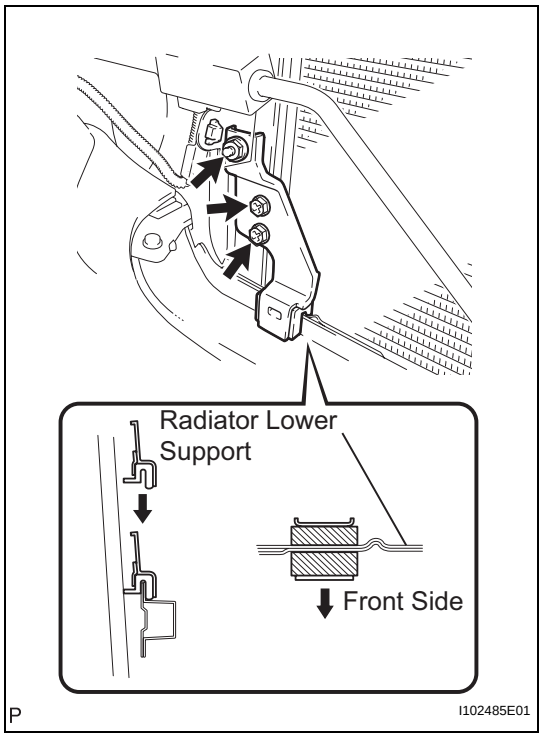

2. INSTALL NO. 2 COOLER CONDENSER CUSHION RH

(a) Install the cooler condenser cushion with the 2 bolts and nut.

NOTICE:
Securely insert the cooler condenser cushion into the radiator lower support.
Torque: 5.5 N*m (56 kgf*cm, 49 in.*lbf) for bolt
5.4 N*m (55 kgf*cm, 48 in.*lbf) for nut

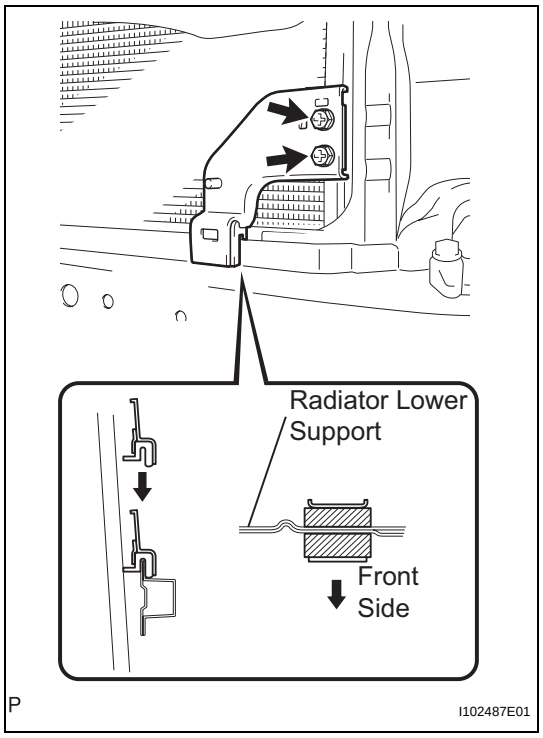

3. INSTALL NO. 2 COOLER CONDENSER CUSHION LH

(a) Install the cooler condenser cushion with the 2 bolts.

NOTICE:
Securely insert the cooler condenser cushion into the radiator lower support.
Torque: 5.5 N*m (56 kgf*cm, 49 in.*lbf)

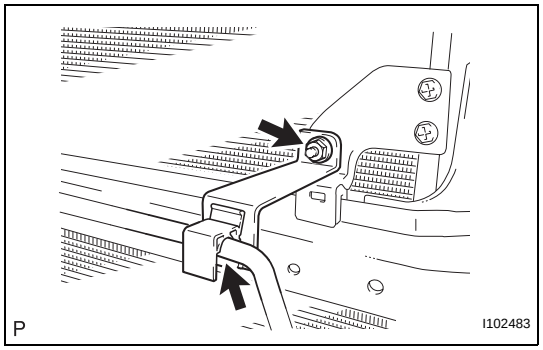

4. INSTALL COOLER BRACKET

(a) Install the cooler bracket with the nut.
Torque: 5.4 N*m (55 kgf*cm, 48 in.*lbf)

(b) Engage the clamp.

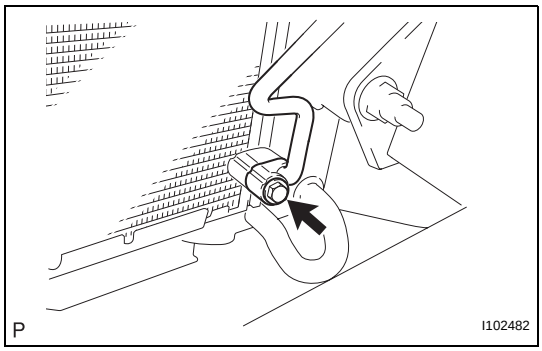

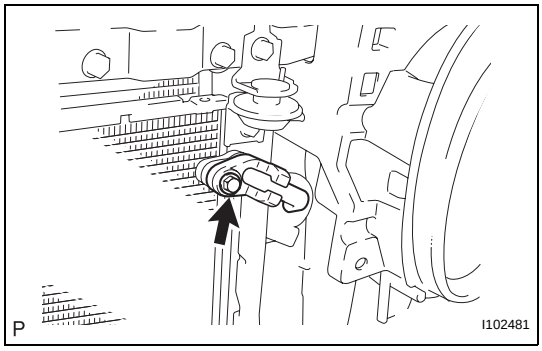

5. INSTALL AIR CONDITIONING TUBE ASSEMBLY

(a) Remove the attached vinyl tape from the pipe and the connecting part of the cooler condenser.

(b) Apply sufficient compressor oil to a new O-ring and the fitting surface of the pipe joint.
Compressor oil:
ND-OIL8 or the equivalent

(c) Install the O-ring onto the air conditioning tube.

(d) Install the tube onto the condenser with the bolt.
Torque: 5.4 N*m (55 kgf*cm, 48 in.*lbf)

6. INSTALL DISCHARGE HOSE SUB-ASSEMBLY

(a) Remove the attached vinyl tape from the hose and the connecting part of the cooler condenser.

(b) Apply sufficient compressor oil to a new O-ring and the fitting surface of the hose joint.
Compressor oil:
ND-OIL8 or the equivalent

(c) Install the O-ring onto the discharge hose.

(d) Install the discharge hose onto the condenser with the bolt.
Torque: 5.4 N*m (55 kgf*cm, 48 in.*lbf)

7. INSTALL FRONT BUMPER COVER (See page ET-10)

8. INSTALL RADIATOR GRILLE (See page ET-11)

9. CONNECT CABLE TO NEGATIVE BATTERY TERMINAL
Torque: 3.9 N*m (40 kgf*cm, 35 in.*lbf)

10. CHARGE REFRIGERANT (See page AC-16)

11. WARM UP ENGINE (See page AC-18)

12. CHECK FOR REFRIGERANT LEAKAGE (See page AC-18)

AC

AMBIENT TEMPERATURE SENSOR

COMPONENTS

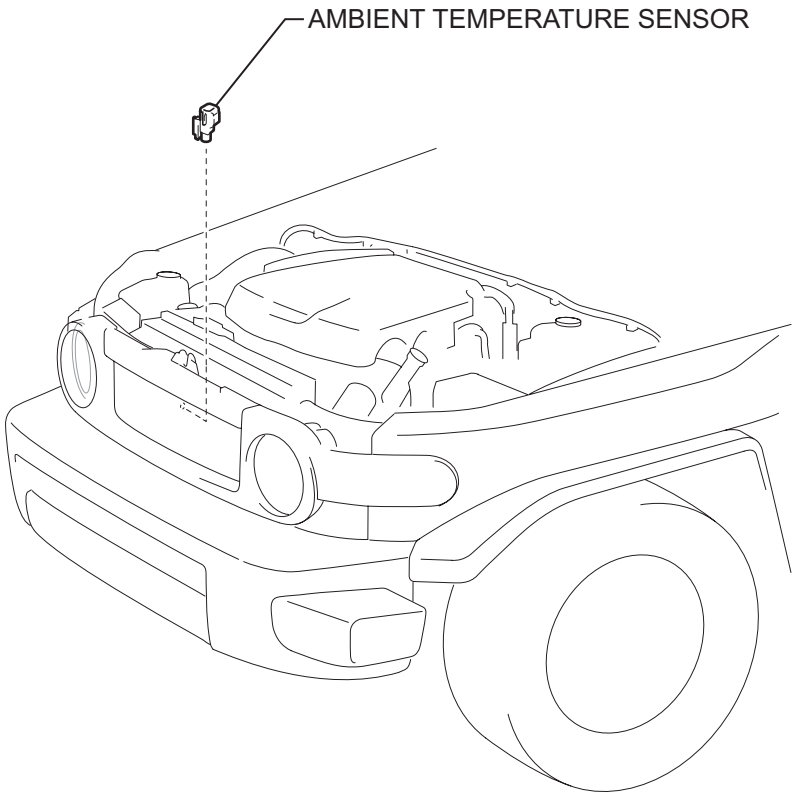

T

I102491E01

REMOVAL

1. DISCONNECT CABLE FROM NEGATIVE BATTERY TERMINAL

2. REMOVE AMBIENT TEMPERATURE SENSOR

(a) Disconnect the connector.

(b) Disengage the clamp and remove the ambient temperature sensor.

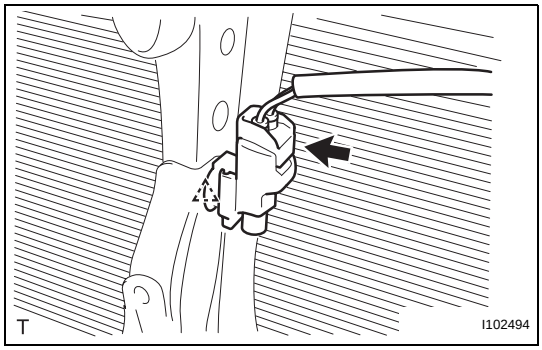

AC

INSPECTION

1. INSPECT AMBIENT TEMPERATURE SENSOR

(a) Measure the resistance.

Standard resistance

Tester Connection	Condition	Specified Condition
1 - 2	10°C (50°F)	3.00 to 3.73 kΩ
1 - 2	15°C (59°F)	2.45 to 2.88 kΩ
1 - 2	20°C (68°F)	1.95 to 2.30 kΩ
1 - 2	25°C (77°F)	1.60 to 1.80 kΩ
1 - 2	30°C (86°F)	1.28 to 1.47 kΩ
1 - 2	35°C (95°F)	1.00 to 1.22 kΩ
1 - 2	40°C (104°F)	0.80 to 1.00 kΩ
1 - 2	45°C (113°F)	0.65 to 0.85 kΩ
1 - 2	50°C (122°F)	0.50 to 0.70 kΩ
1 - 2	55°C (131°F)	0.44 to 0.60 kΩ
1 - 2	60°C (140°F)	0.36 to 0.50 kΩ

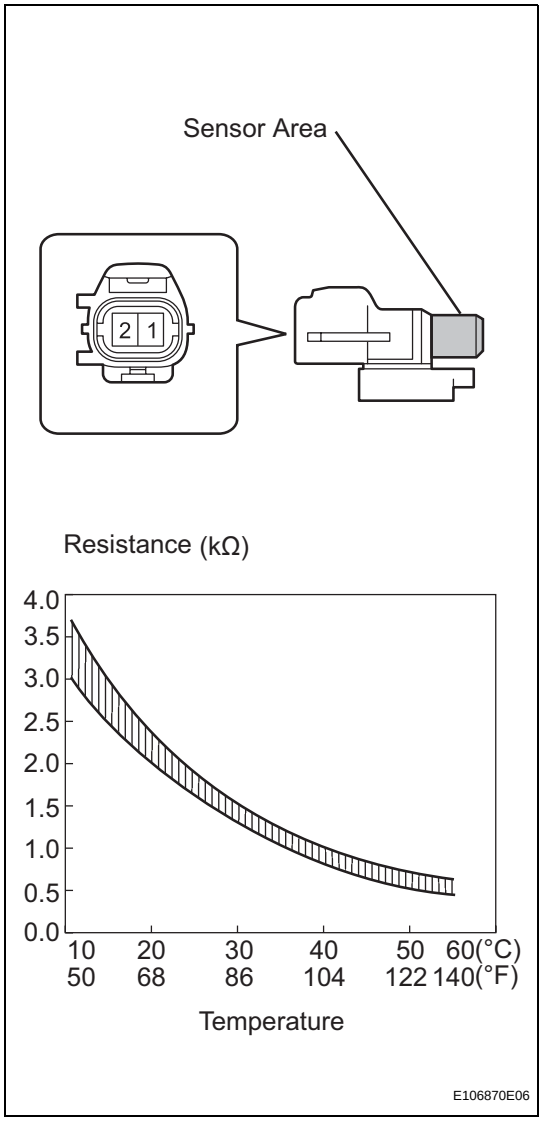

NOTICE:

- **Touching the sensor even slightly may change the resistance value. Hold the connector of the sensor.**
- **When measuring the resistance, the temperature of the sensor and the ambient temperature sensor must be the same.**

HINT:

As the temperature increases, the resistance decreases (see the graph).

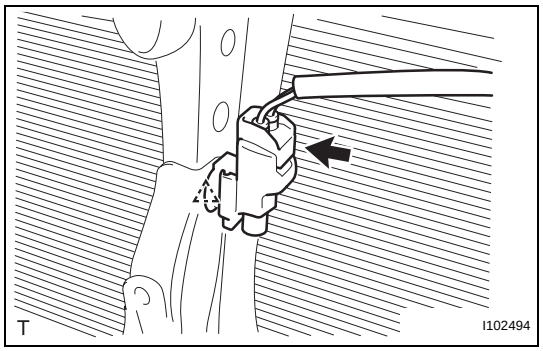

INSTALLATION

1. INSTALL AMBIENT TEMPERATURE SENSOR

(a) Engage the clamp and install the ambient temperature sensor.

(b) Connect the connector.

2. CONNECT CABLE TO NEGATIVE BATTERY TERMINAL

Torque: 3.9 N*m (40 kgf*cm, 35 in.*lbf)

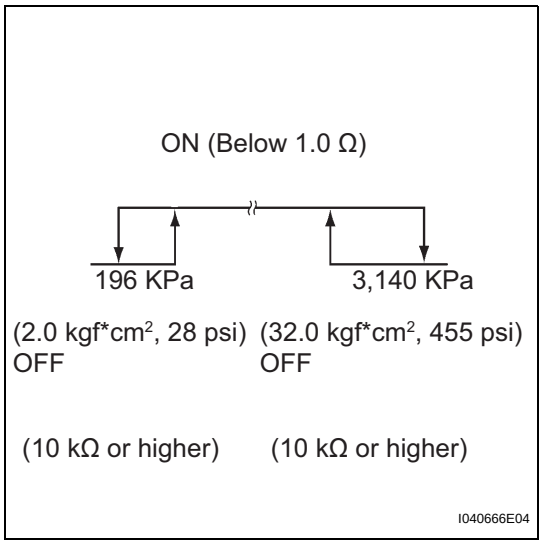

PRESSURE SWITCH

ON-VEHICLE INSPECTION

1. INSPECT PRESSURE SWITCH

HINT:

- The pressure switch is installed onto the air conditioning pipe on the high pressure side.
- The switch detects drops in refrigerant pressure, such as from refrigerant leakage, and turns the magnet clutch off (*1) to prevent damage to the compressor.
- The switch detects abnormally high pressure in the air conditioning cycle and turns the magnet clutch off (*1) to prevent damage to parts of the air conditioning cycle.

(*1): The ECM turns the magnet clutch on or off upon receiving the signal from the pressure switch.

- As the pressure switch operates when there is a malfunction with the refrigerant pressure, its function cannot be inspected on-vehicle. Follow the procedures below to inspect it.

(a) Inspect the refrigerant pressure in the air conditioning cycle.

(b) Read the manifold gauge pressure when the conditions below are established. (*2)

Test conditions:

- Engine running at 1,500 rpm
- Blower speed control knob in HI position
- Temperature control knob in COOL position
- Air conditioning switch ON
- Recirculation mode
- Doors fully open

Standard:

Pressure on high pressure side:

1.37 to 1.57 MPa (13.9 to 16.0 kgf*cm2, 198 to 228 psi)

HINT:

- If the refrigerant pressure is not within the standard range, inspect and repair the air conditioning cycle.
(See Page AC-12)
- Proceed to step (*2) if the refrigerant pressure is within the specified range.
- If the refrigerant pressure is below 196 KPa (2.0 kgf*cm2, 28 psi), the refrigerant amount in the air conditioning cycle may have decreased significantly for reasons such as a gas leakage.

AC

Pressure Switch Connector Wire Harness View:

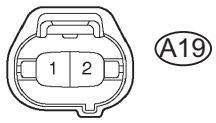

C I036436E03

(c) Check the air conditioning operation.
(1) Disconnect the pressure switch connector.
(2) Connect terminals 1 and 2 of the pressure switch connector on the vehicle wire harness side using a service wire.
(3) Start the engine.
(4) Turn the air conditioning switch on and check that the magnet clutch is turned on.
(5) Check that the magnet clutch is turned off when disconnecting terminals 1 and 2 (those connected in the prior step).

Standard:

Terminals 1 and 2 connected: Magnet clutch is ON

Terminals 1 and 2 disconnected: Magnet clutch is OFF

Replace the pressure switch if the magnet clutch operates normally.

Inspect and repair the wire harness between the pressure switch and the ECM.

AC

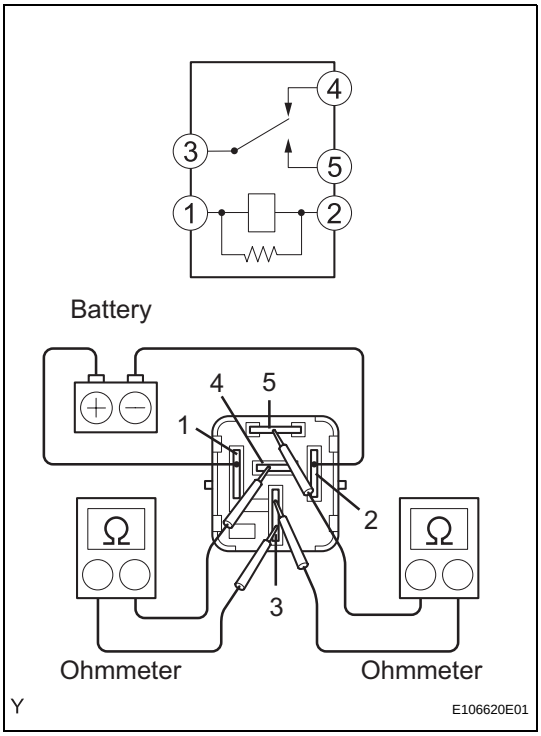

HEATER BLOWER MOTOR RELAY

ON-VEHICLE INSPECTION

1. INSPECT HEATER BLOWER MOTOR RELAY ASSEMBLY

(a) Check the resistance.

(1) Using an ohmmeter, measure the resistance between the terminals.

Standard resistance

Tester Connection	Specified Condition
3 - 4	Below 1 Ω
3 - 4	10 kΩ or higher (Apply battery voltage to terminals 1 and 2)
3 - 5	10 kΩ or higher
3 - 5	Below 1 Ω (Apply battery voltage to terminals 1 and 2)

If the result is not as specified, replace the relay.

AC

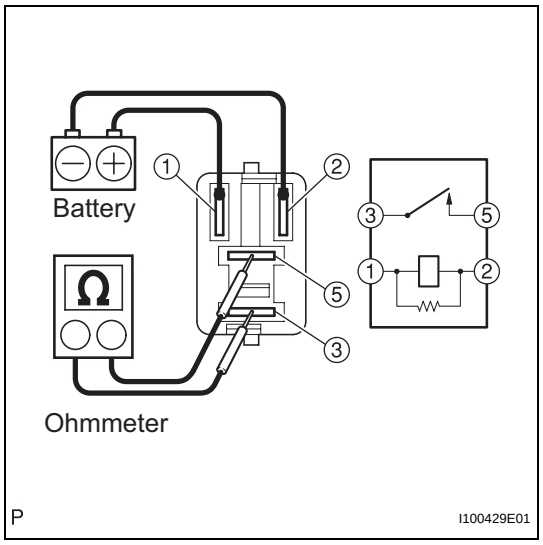

MAGNETIC CLUTCH RELAY

ON-VEHICLE INSPECTION

1. INSPECT MAGNET CLUTCH RELAY

(a) Check the resistance.

(1) Using an ohmmeter, measure the resistance between the terminals.

Standard resistance

Tester Connection	Specified Condition
3 - 5	10 kΩ or higher
3 - 5	Below 1 Ω (Apply battery voltage to terminals 1 and 2)

If the result is not as specified, replace the relay.

AC

INTEGRATION CONTROL AND PANEL

COMPONENTS

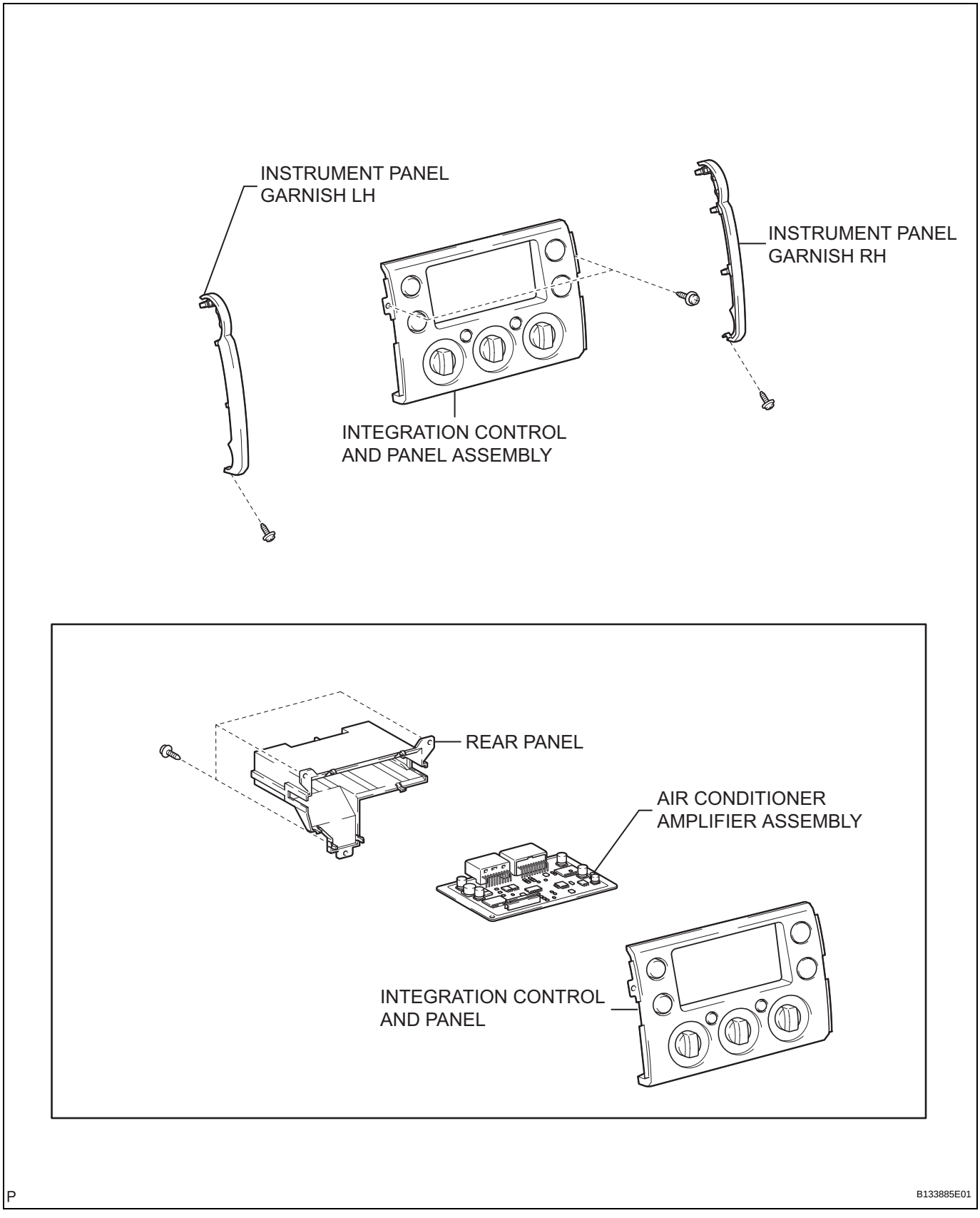

REMOVAL

1. **DISCONNECT CABLE FROM NEGATIVE BATTERY TERMINAL**
2. **REMOVE INSTRUMENT PANEL GARNISH LH (See page IP-10)**
3. **REMOVE INSTRUMENT PANEL GARNISH RH (See page IP-10)**
4. **REMOVE INTEGRATION CONTROL AND PANEL ASSEMBLY**
   (a) Remove the 2 screws.
   (b) Disengage the 4 clips and remove the integration control assembly.
   (c) Disconnect the 3 connectors.

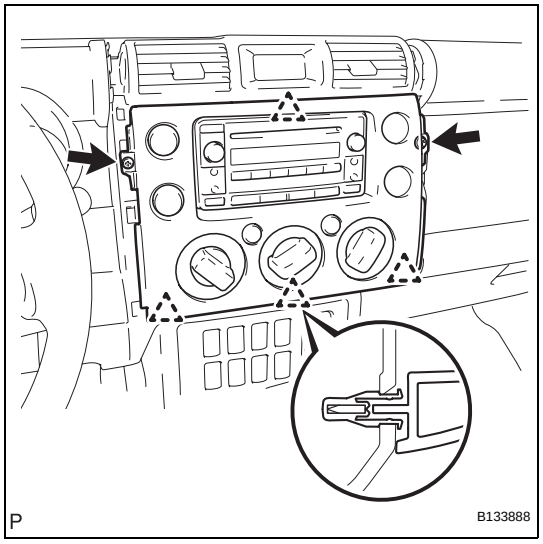

DISASSEMBLY

1. **REMOVE AIR CONDITIONER AMPLIFIER ASSEMBLY**
   (a) Remove the 3 screws.
   (b) Disengage the 6 claws and remove the rear panel.

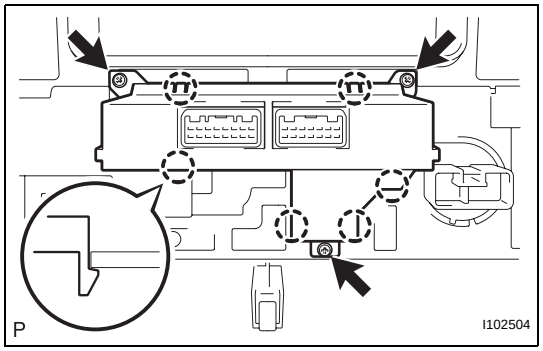

   (c) Disengage the lock of the connector and disconnect the cable.
   (d) Remove the air conditioner amplifier assembly.

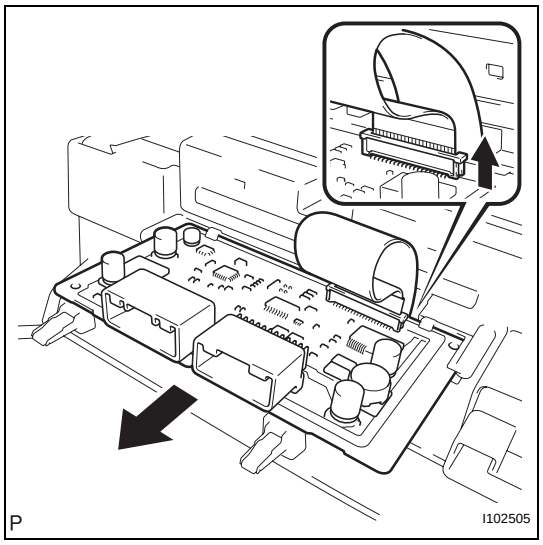

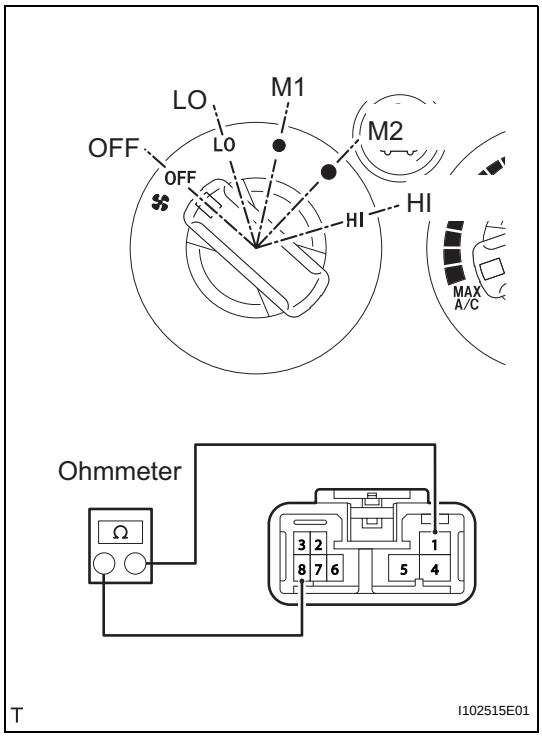

INSPECTION

1. INSPECT INTEGRATION CONTROL AND PANEL ASSEMBLY

(a) Check the blower switch resistance.

(1) Using an ohmmeter, measure the resistance and check the results in accordance with the values in the table below.

Standard resistance

Tester connection	Blower Switch Position	Specified Condition
1 - 4 - 5 - 6 - 8	OFF	10 KΩ or higher
1 - 8	LO	Below 1 Ω
1 - 6 - 8	M1	Below 1 Ω
1 - 5 - 8	M2	Below 1 Ω
1 - 4 - 8	HI	Below 1 Ω

If the result is not as specified, replace the integration control and panel assembly.

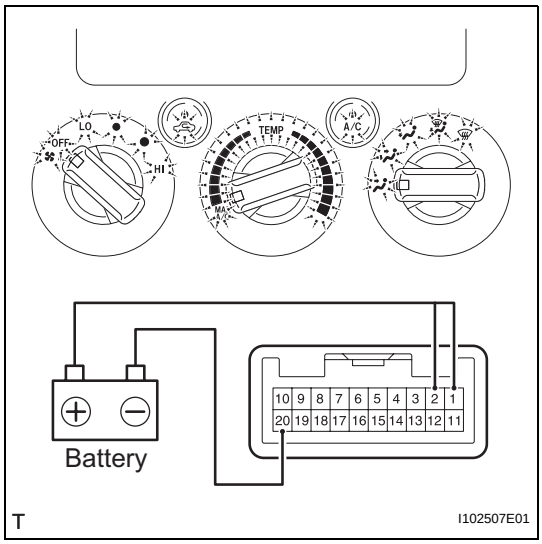

(b) Inspect the illumination operation.

(1) Connect the positive (+) lead from the battery to terminals 1 (IG+) and 2 (ILL+) and the negative (-) lead to terminal 20 (GND), then check that the illuminations light up.

Standard:

Illuminations light up

If the result is not as specified, replace the integration control and panel assembly.

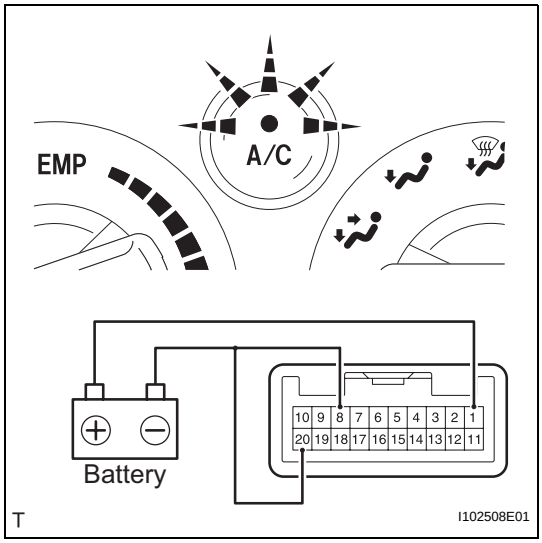

(c) Inspect the A/C indicator operation.

(1) Connect the positive (+) lead from the battery to terminal 1 (IG+) and the negative (-) lead to terminals 8 (BLW) and 20 (GND).

(2) Push the A/C button in and then check that the indicator lights up.

Standard

Switch Condition	Specified Condition
Switch ON	Indicator illuminates
Switch OFF	Indicator turns off

HINT:
Inspect the A/C indicator operation in any position except MAX COOL. The A/C indicator ON/OFF operation does not function in MAX COOL position (The A/C indicator is held in ON state).
If the result is not as specified, replace the integration control and panel assembly.

(3) Under the above condition, connect the positive (+) lead from the battery to terminal 2 (ILL+) and then check that the indicator dims.
Standard

Switch Condition	Specified Condition
Switch ON	Indicator dims
Switch OFF	Indicator turns off

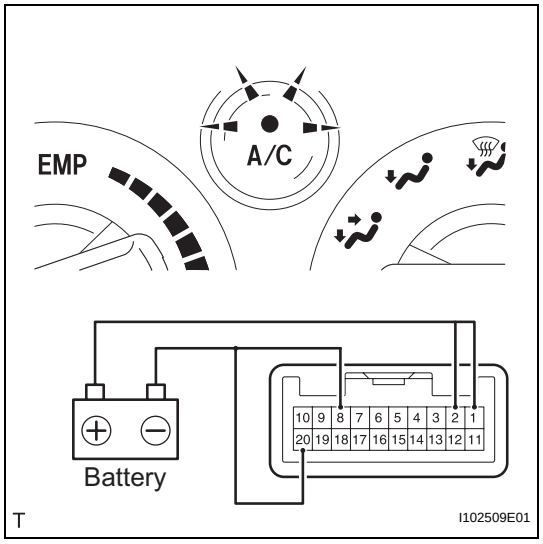

HINT:
Inspect the A/C indicator operation in any position except MAX COOL. The A/C indicator ON/OFF operation does not function in MAX COOL position (The A/C indicator is held in ON state).
If the result is not as specified, replace the integration control and panel assembly.

(d) Inspect the REC indicator operation.
(1) Connect the positive (+) lead from the battery to terminal 1 (IG+) and the negative (-) lead to terminal 20 (GND).
NOTICE:
Inspect the MODE switch in any position except DEF.
(2) Push the REC button in and check that the indicator lights up.
Standard

Switch Condition	Specified Condition
Switch ON	Indicator illuminates
Switch OFF	Indicator turns off

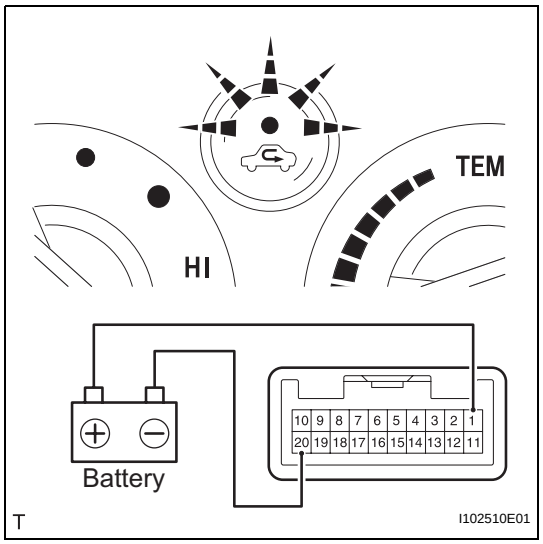

If the result is not as specified, replace the integration control and panel assembly.

AC

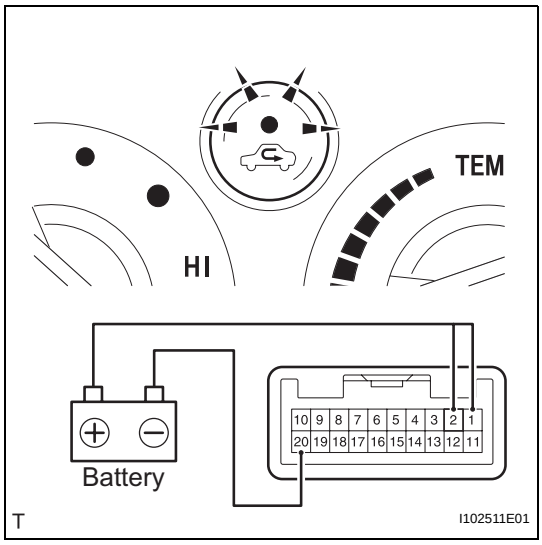

(3) Under the above condition, connect the positive (+) lead from the battery to terminal 2 (ILL+) and then check that the indicator dims.
NOTICE:
Inspect the MODE switch in any position except DEF.
Standard

Switch Condition	Specified Condition
Switch ON	Indicator dims
Switch OFF	Indicator turns off

If the result is not as specified, replace the integration control and panel assembly.

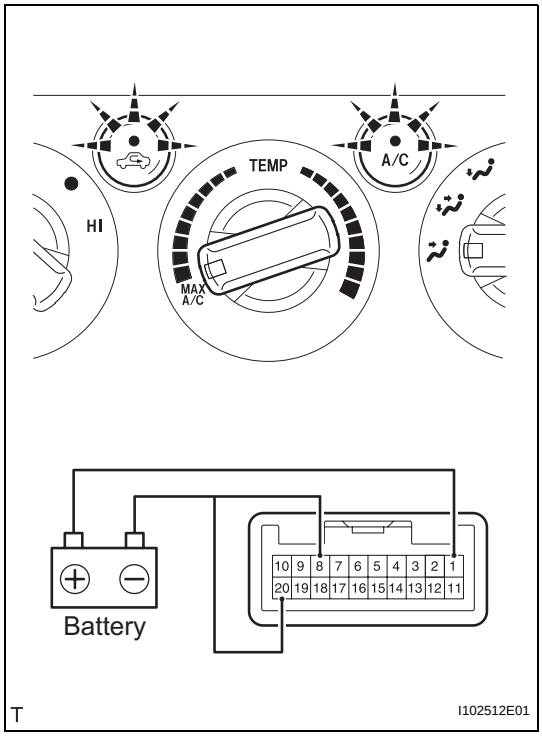

(e) Inspect the temperature control switch operation.
(1) Connect the positive (+) lead from the battery to terminal 1 (IG+) and the negative (-) lead to terminals 8 (BLW) and 20 (GND).
NOTICE:
Inspect the MODE switch in any position other than DEF and FOOT/DEF.
(2) Check the A/C indicator and REC indicator operations when the temperature switch is operated.
Standard

Temperature Switch Condition	Specified Condition (A/C indicator and REC indicator)
Except MAX A/C	Neither indicator illuminates
MAX A/C	Both indicators illuminate*1

HINT:
*1: The A/C indicator remains illuminated even after the temperature switch is turned from this position to another. The REC indicator returns to the condition prior to turning the switch to MAX A/C. Press the A/C switch in and check that the indicator turns off.
If the result is not as specified, replace the integration control and panel assembly.

AC

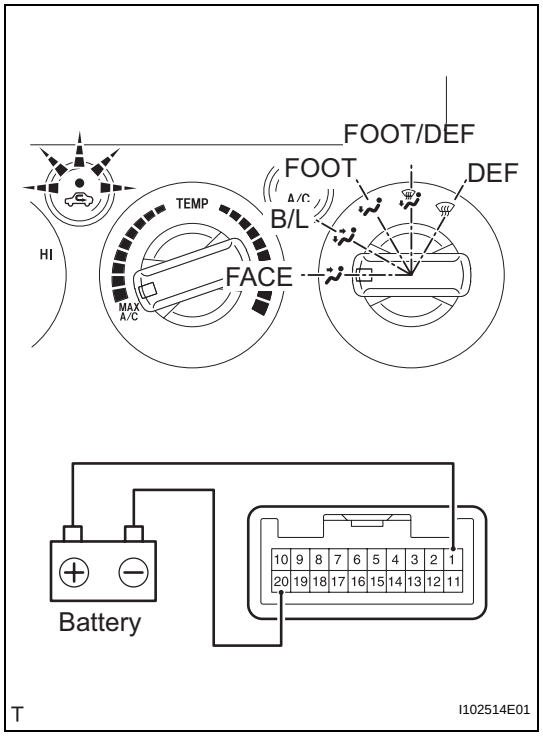

(f) Inspect MODE switch operation.
   (1) Connect the positive (+) lead from the battery to terminal 1 (IG+) and the negative (-) lead to terminal 20 (GND).
   (2) Check the REC indicator operation when the MODE switch is operated.

Standard

Condition	Specified Condition (REC indicator)
MODE switch except DEF REC switch ON ⟷ OFF	Indicator turns ON ⟷ OFF in accordance with REC switch operation
MODE switch DEF REC switch ON ⟷ OFF	Indicator turns off

If the result is not as specified, replace the integration control and panel assembly.

AC

REASSEMBLY

1. INSTALL AIR CONDITIONER AMPLIFIER ASSEMBLY

(a) Remove the air conditioner amplifier assembly.
(b) Engage the lock of the connector and connect the cable.

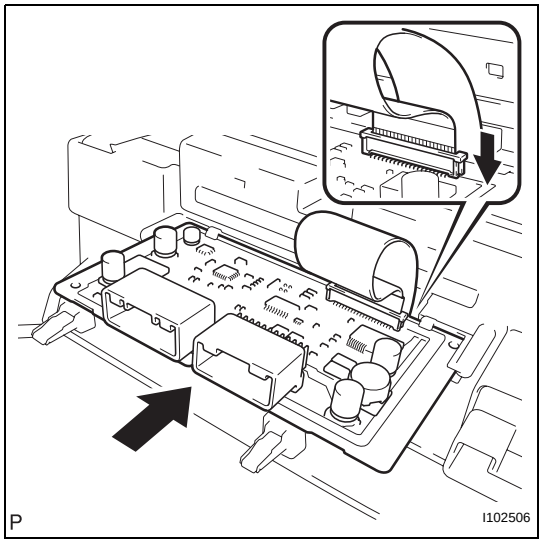

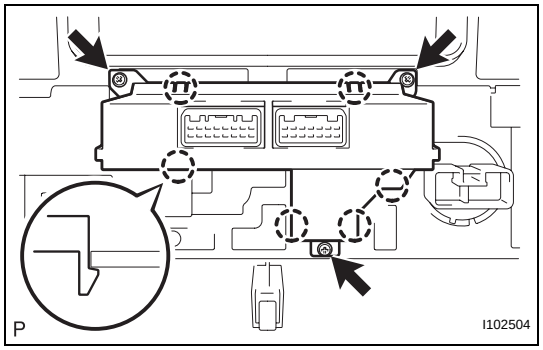

(c) Engage the 6 claws and install the rear panel.
(d) Install the 3 screws.

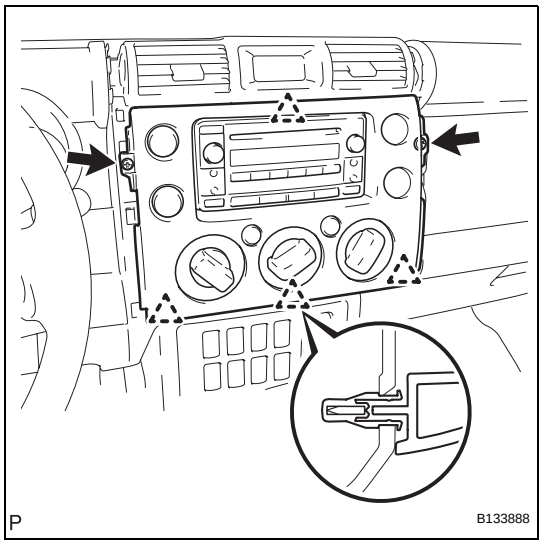

INSTALLATION

1. **INSTALL INTEGRATION CONTROL AND PANEL ASSEMBLY**
   (a) Connect the 3 connectors.
   (b) Engage the 4 clips and install the integration control assembly.
   (c) Install the 2 screws.
2. **INSTALL INSTRUMENT PANEL GARNISH LH (See page IP-33)**
3. **INSTALL INSTRUMENT PANEL GARNISH RH (See page IP-33)**
4. **CONNECT CABLE TO NEGATIVE BATTERY TERMINAL**
   Torque: 3.9 N*m (40 kgf*cm, 35 in.*lbf)

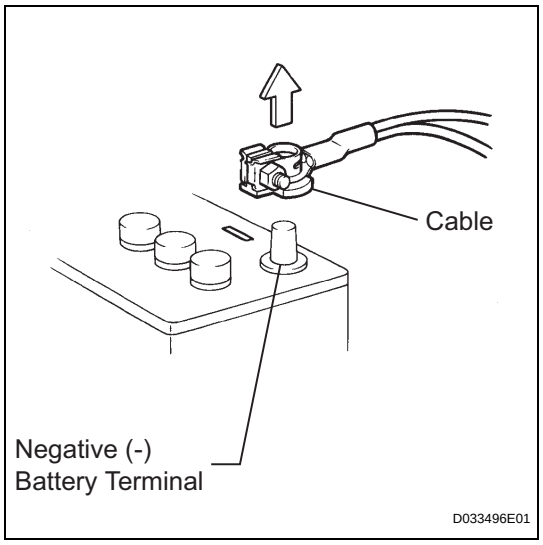

AUDIO AND VISUAL SYSTEM

PRECAUTION

1. DISCONNECT AND RECONNECT CABLE OF NEGATIVE BATTERY TERMINAL

(a) Before performing electronic work, disconnect the cable from the negative (-) battery terminal in order to prevent it from shorting and burning out.

(b) Before disconnecting and reconnecting the battery cable, turn the ignition switch OFF and the headlight dimmer switch OFF. Then loosen the terminal nut completely. Do not damage the cable or terminal.

(c) When the battery cable is disconnected, the clock and radio settings and stored DTCs are erased. Therefore, before disconnecting the battery cable, make a notes of them.

NOTICE:

When the cable is disconnected from the negative (-) battery terminal, initialize the following system(s) after the cable is reconnected.

System name	See procedure
METER / GAUGE SYSTEM	ME-10

AV

PARTS LOCATION

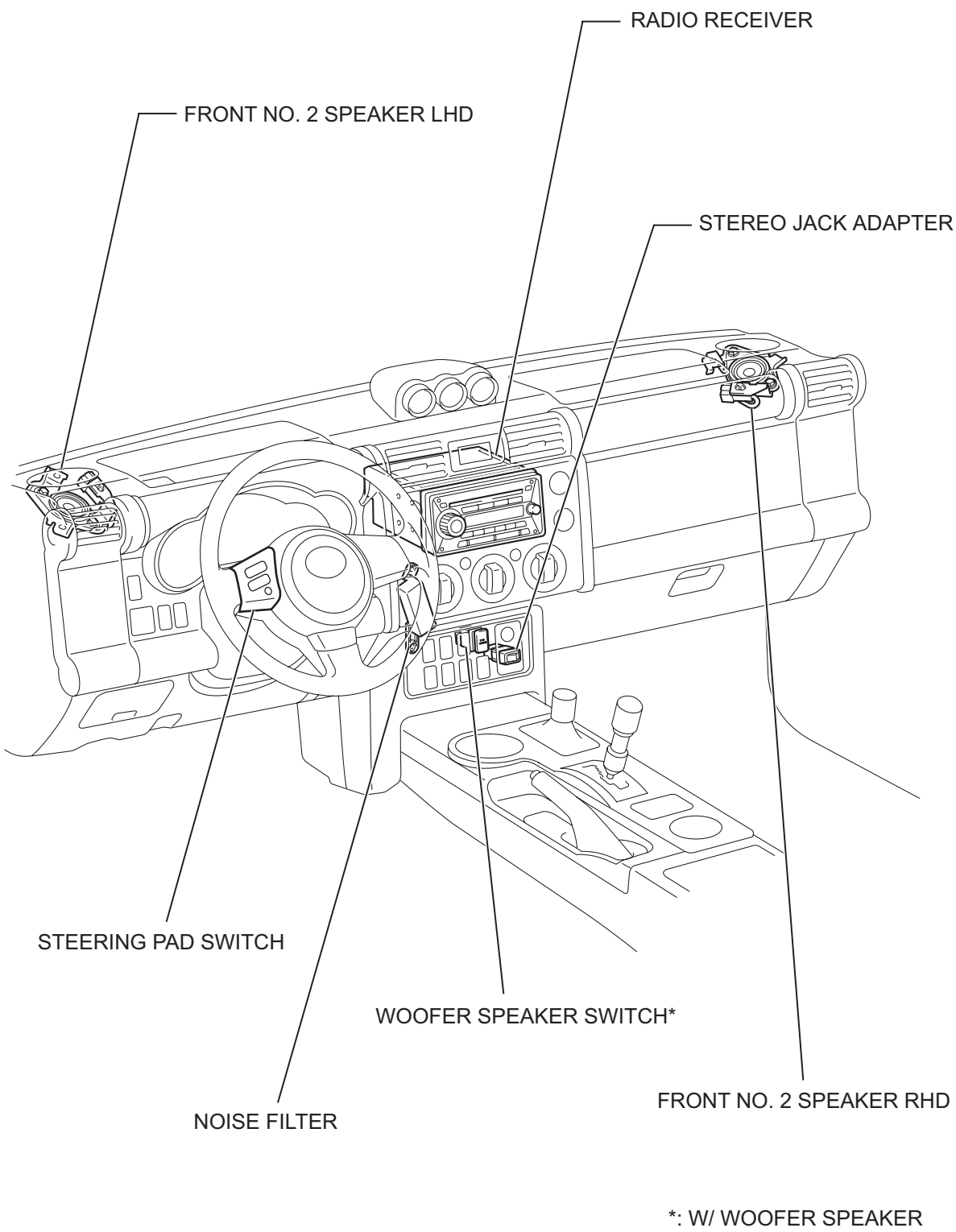

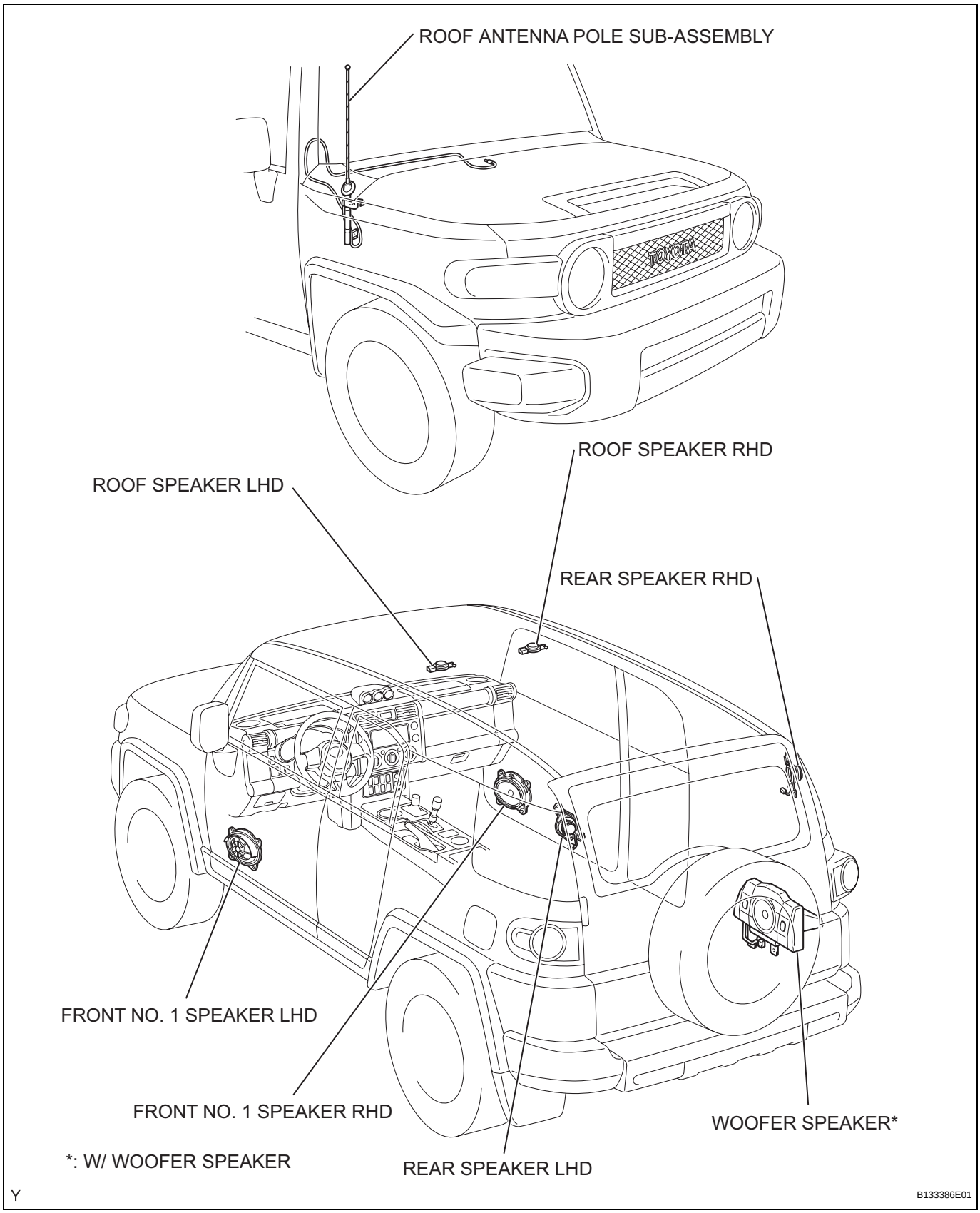
ROOF ANTENNA POLE SUB-ASSEMBLY
ROOF SPEAKER RHD
ROOF SPEAKER LHD
REAR SPEAKER RHD
FRONT NO. 1 SPEAKER LHD
FRONT NO. 1 SPEAKER RHD
WOOFER SPEAKER*
*: W/ WOOFER SPEAKER
REAR SPEAKER LHD
Y
B133386E01

AV

SYSTEM DIAGRAM

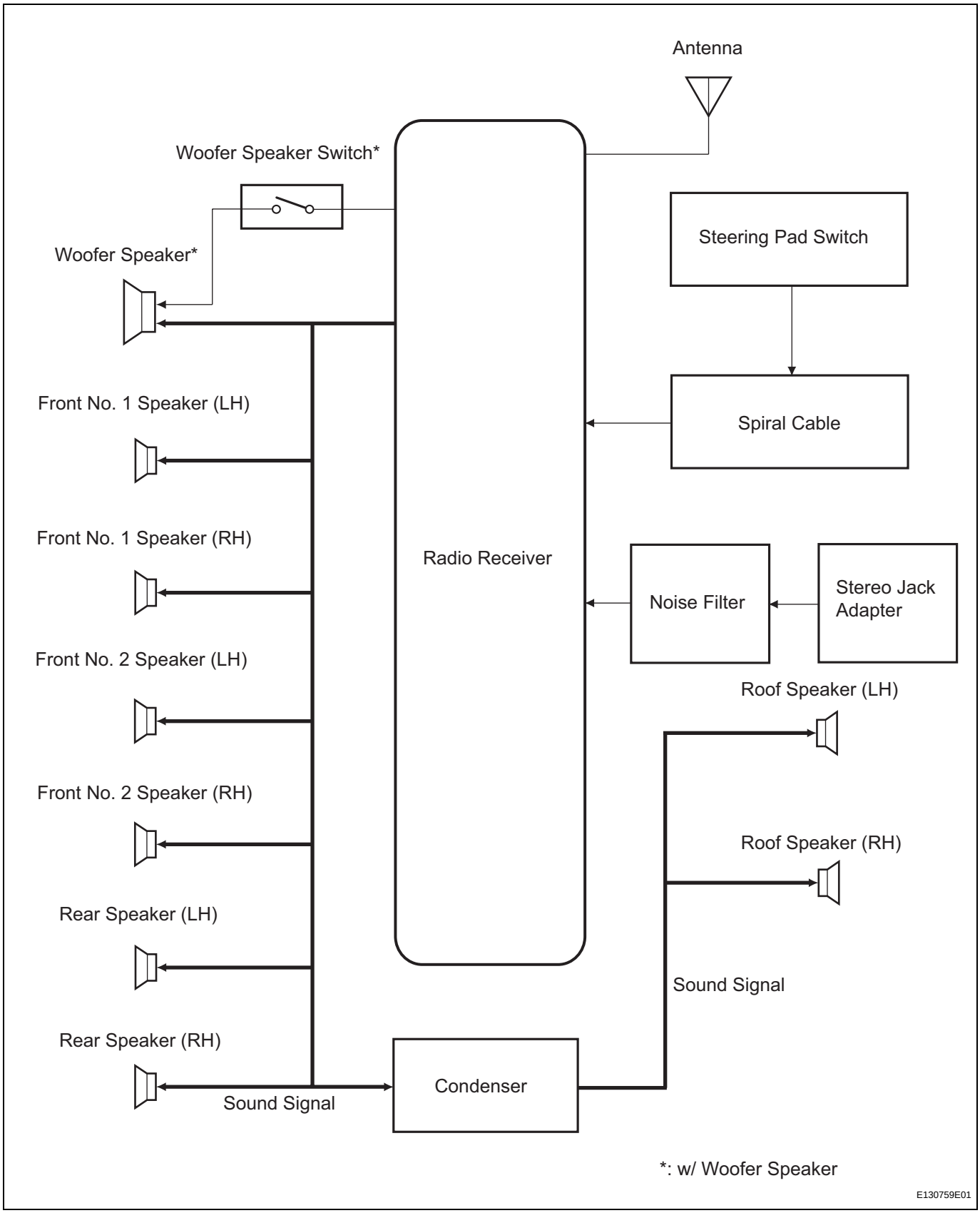

AV

SYSTEM DESCRIPTION

1. CD PLAYER OUTLINE

(a) A CD player uses a laser pickup to read digital signals recorded on CDs . By converting the digital signals to analog, music and other contents can be played.

CAUTION:

Do not look directly at the laser pickup because the CD player uses an invisible laser beam. Be sure to operate the player only as instructed.

NOTICE:

- **Do not disassemble any part of the CD player.**
- **Do not apply oil to the CD player.**
- **Do not insert anything but a CD into the CD player.**

(b) Usable CDs

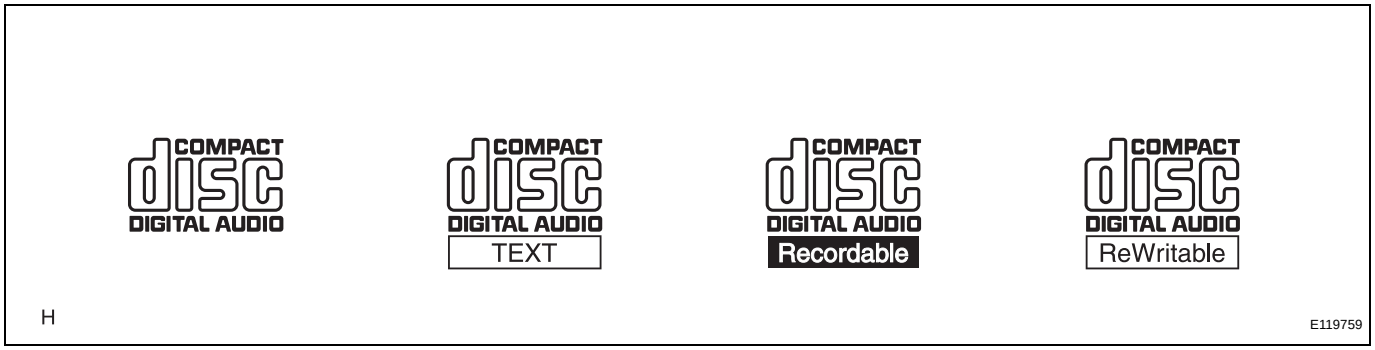

(c) Precautions for use of discs

NOTICE:

- **Copy-protected CDs cannot be played.**
- **Dual discs cannot be played. Playing dual discs may cause malfunctions of the CD player.**
- **CD-Rs and CD-RWs may not be played depending on the recording conditions or characteristics of the discs, or due to damage, dirt, or deterioration caused by leaving the discs in the cabin for a long time.**
- **Unfinalized CD-Rs and CD-RWs cannot be played.**
- **PAL or SECAM color television standard discs cannot be played. (Only NTSC discs can be played.)**
- **Keep the discs away from dirt. Be careful not to damage the discs or leave your fingerprints on them.**
- **Hold discs by the outer edge and center hole with the label side up.**
- **Leaving the disc exposed halfway out of the slot for a long time after pressing the disc eject button may cause deformation of the disc, making the disc unusable.**

- **If discs have adhesive tape, stickers, CDR labels, or any traces of such labels attached, the discs may not be ejected or player malfunctions may result.**
- **Keep the discs away from direct sunlight. (Exposure to direct sunlight may cause deformation of the disc, making the disc unusable.)**
- **Do not use odd-shaped CDs because these may cause player malfunctions.**
- **Do not use discs whose recording portion is transparent or translucent because they may not be inserted, ejected, or played normally.**

HINT:

- When it is cold or it is raining, if the windows mist up, mist and also dew may form in the player. In such a case, the CD may skip or the CD may stop in the middle of play. Ventilate or dehumidify the cabin for a while before using the player.
- The CD may skip if the player experiences strong vibrations when the vehicle is driven on rough road or similar uneven surface(s).

(d) Cleaning

NOTICE:

Do not use a lens cleaner because it may cause a malfunction in the pickup portion of the player.

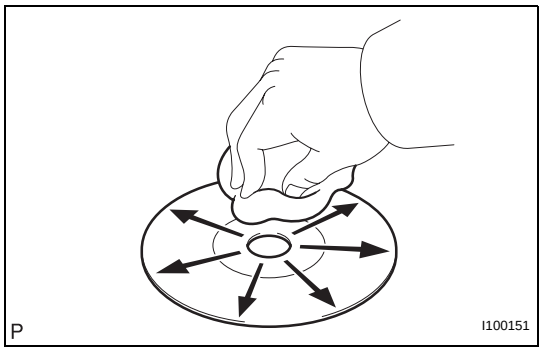

(1) If dirt is on the disc surface, wipe it clean with a soft dry cloth such as an eyeglass cleaner for plastic lenses from the center to the outside in a radial direction.

NOTICE:

- **Pressing on the disc by hand or rubbing the disc with a hard cloth may scratch the disc surface.**
- **Use of solvent such as a record spray, antistatic agent, alcohol, benzine, and thinner, or a chemical cloth may cause damage to the disc, making the disc unusable.**

2. MP3/WMA OUTLINE

(a) Playable MP3 file standards

Compatible standard	MP3 (MPEG1 LAYER3, MPEG2 LSF LAYER 3)
Compatible sampling frequency	• MPEG1 LAYER3: 32, 44.1, 48 (kHz) • MPEG2 LSF LAYER3: 16, 22.05, 24 (kHz)
Compatible bit rate	• MPEG1 LAYER3: 64, 80, 96, 112, 128, 160, 192, 224, 256, 320 (kbps) • MPEG2 LSF LAYER3: 64, 80, 96, 112, 128, 160 (kbps) • Compatible with VBR
Compatible channel mode	Stereo, joint stereo, dual channel, monaural

(b) Playable WMA file standards

Compatible standard	WMA Ver. 7, 8, and 9
Compatible sampling frequency	32, 44.1, 48 (kHz)

Compatible bit rate	• Ver. 7, 8: CBR48, 64, 80, 96, 128, 160, 192 (kbps) • Ver. 9: CBR48, 64, 80, 96, 128, 160, 192, 256, 320 (kbps) • Compatible with playback of channel 2 only

(c) ID3 tags and WMA tags

(1) Additional textual information called ID3 tags can be input to MP3 files. Information such as song titles and artist names can be stored.
HINT:
This player is compatible with the ID3 tags of ID3 Ver. 1.0 and 1.1, and ID3 Ver. 2.2 and 2.3. (Number of characters complies with ID3 Ver. 1.0 and 1.1.)

(2) Additional textual information called WMA tags can be input to WMA files. Information such as song titles and artist names can be stored.

(d) Usable media

(1) Only CD-ROMs, CD-Rs (CD-Recordable), and CD-RWs (CD-ReWritable) can be used to play MP3/WMA files.
NOTICE:
- **CD-Rs and CD-RWs are more easily affected by a hot and humid environment than discs used for normal audio CDs. For this reason, some CD-Rs and CD-RWs may not be played.**
- **If there are fingerprints or scratches on the disc, the disc may not be played or the CD may skip.**
- **Some CD-Rs and CD-RWs deteriorate if they are left in the cabin for a long time.**
- **Keep CD-Rs and CD-RWs in a storage case that is impenetrable to light.**

(e) Usable media format

(1) Usable media format

Disc format	CD-ROM Mode 1, CD-ROM XA Mode 2 Form1
File format	ISO9660 Level 1 and Level 2 (Joliet and Romeo)

HINT:
- As for MP3/WMA files written in any format other than those above, the contents of the files may not be played normally or the file names or folder names may not be displayed correctly.
- This player is compatible with multi-session discs and can play CD-Rs and CD-RWs on which MP3/WMA files are added. However, only the first session can be played.
- Discs whose first session includes both music data and MP3 or WMA format data cannot be played.

(2) Standard and restrictions

Maximum directory levels	8 levels
Maximum number of characters for a folder name/file name	32 characters

AV

Maximum number of folders	192 (Including empty folders, route folders, and folders that do not contain MP3/WMA files)
Maximum number of files in a disc	255 (Including non-MP3/WMA files)

(f) File names

(1) Only files with an extension of ".mp3" or ".wma" can be recognized and played as MP3 or WMA files.

(2) Save MP3 or WMA files with an extension of ".mp3" or ".wma".

NOTICE:

If saving non-MP3 or non-WMA files with an extension of ".mp3" or ".wma", those files are wrongly recognized as MP3 or WMA files and played. A loud noise may occur and damage to the speakers may result.

HOW TO PROCEED WITH TROUBLESHOOTING

HINT:
In accordance with the following procedures, troubleshoot the audio and visual system.

1 VEHICLE BROUGHT TO WORKSHOP

NEXT

2 INSPECT BATTERY VOLTAGE

Standard Voltage:
11 to 14 V
If the voltage is below 11 V, recharge or replace the battery before proceeding.

NEXT

3 BASIC INSPECTION

(a) Turn the ignition switch to ACC.
(b) Check whether the display appears on the radio receiver.

Result	Proceed to
Display appears	A
Display does not appear	B

B → **PROCEED TO PROBLEM SYMPTOMS TABLE**

A

4 PROBLEM SYMPTOMS TABLE

Result	Proceed to
Fault not listed in problem symptoms table	A
Fault listed in problem symptoms table	B

B → **Go to step 6**

A

5 OVERALL ANALYSIS AND TROUBLESHOOTING

(a) Terminals of ECU (See page AV-12)

NEXT

6	**ADJUST, REPAIR OR REPLACE**

NEXT

7	**CONFIRMATION TEST**

NEXT

END

IDENTIFICATION OF NOISE SOURCE

1. Radio Description

(a) Radio frequency band

(1) Radio broadcasts use the radio frequency bands shown in the table below.

Frequency	30 kHz	300 kHz	30 MHz	30 MHz	300 MHz
Designation	LF	MF	HF	VHF	
Radio Wave		AM ⟷		FM ⟷	
Modulation	Amplitude modulation			Frequency modulation	

LF: Low Frequency MF: Medium Frequency HF: High Frequency VHF: Very High Frequency

E108734E01

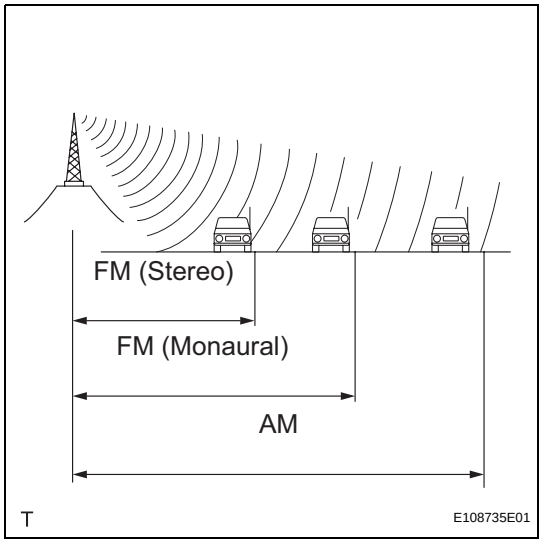

(b) Service area

(1) The service areas of AM and FM broadcasts are vastly different. Sometimes an AM broadcast can be received very clearly but an FM stereo cannot. FM stereo has the smallest service area, and is prone to pick up static and other types of interference such as noise.

(c) Radio reception problems

HINT:

In addition to static, other problems such as "phasing", "multipath", and "fade out" exist. These problems are not caused by electrical noise, but by the radio signal propagation method itself.

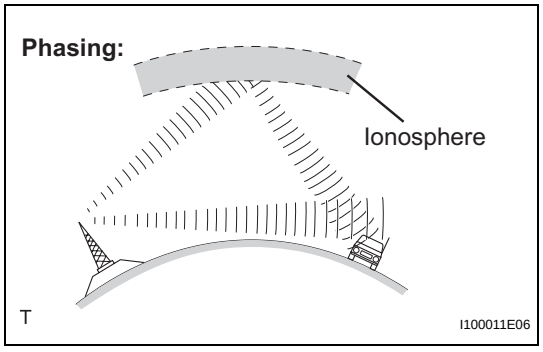

(1) Phasing

AM broadcasts are susceptible to electrical interference and another kind of interference called phasing. Occurring only at night, phasing is the interference created when a vehicle receives 2 radio wave signals from the same transmitter. One signal is reflected off the ionosphere and the other signal is received directly from the transmitter.

AV

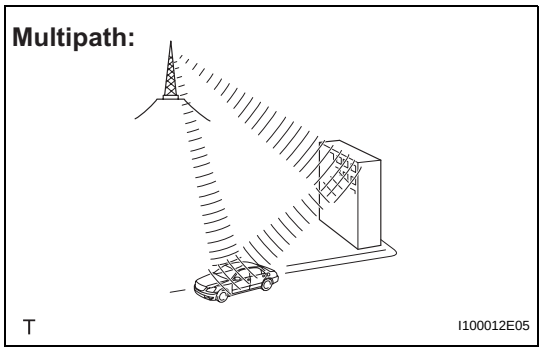

(2) Multipath
Multipath is a type of interference created when a vehicle receives 2 radio wave signals from the same transmitter. One signal is reflected off buildings or mountains and the other signal is received directly from the transmitter.

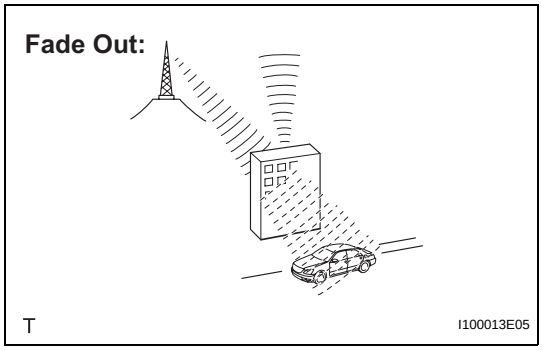

(3) Fade out
Fade out is caused by objects (buildings, mountains, and other such large obstacles) that deflect away part of a signal, resulting in a weaker signal when the object is between the transmitter and the vehicle. High frequency radio waves, such as FM broadcasts, are easily deflected by obstructions. Low frequency radio waves, such as AM broadcasts, are much more difficult to deflect.

(d) Noise problem
Technicians must have a clear understanding about each customer's noise complaint. Use the following table to diagnose noise problems.

Radio Frequency	Noise Occurrence Condition	Presumable Cause
AM	Noise occurs in a specified area	Foreign noise
AM	Noise occurs when listening to an intermittent broadcast	An identical program transmitted from multiple towers can cause noise where the signals overlap
AM	Noise occurs only at night	Music beat from a distant broadcast
FM	Noise occurs while driving in a specified area	Multipath or phasing noise resulting from a change in FM frequency

HINT:
If the noise does not match the examples above, refer to the descriptions about phasing and multipath.

PROBLEM SYMPTOMS TABLE

HINT:
Use the table below to determine the cause of the problem symptom. The potential causes of the symptom are listed in order of probability in the "Suspected Area" column of the table. Check each symptom by checking the suspected areas in the order they are listed. Replace parts as necessary.

Audio Function

Symptom	Suspected area	See page
Noise occurs	1. Proceed to Noise Occurs	AV-14
	2. Radio Receiver	-
Pressing power switch does not turn on system	1. Proceed to Pressing Power Switch does not Turn on System	AV-15
	2. Proceed to Radio Receiver Power Source Circuit	AV-49
	3. Radio Receiver	-
No sound can be heard from speakers (audio is mute)	1. Proceed to No Sound can be Heard from Speakers (Audio is Mute)	AV-16
	2. Proceed to Speaker Circuit	AV-35
	3. Proceed to Radio Receiver Power Source Circuit	AV-49
	4. Proceed to Woofer Speaker Power Source Circuit (w/ woofer speaker)	AV-46
	5. Radio Receiver	-
Sound quality is bad only when CD is played (volume is too low)	1. Proceed to Sound Quality is Bad Only when CD is played (Volume is too low)	AV-17
	2. Proceed to Speaker Circuit	AV-35
	3. Proceed to Woofer Speaker Power Source Circuit (w/ woofer speaker)	AV-51
	4. Radio Receiver	-
CD cannot be ejected	1. Proceed to CD cannot be Ejected	AV-18
	2. Proceed to Radio Receiver Power Source Circuit	AV-49
	3. Radio Receiver	-
CD cannot be inserted / played or CD is ejected right after insertion	1. Proceed to CD cannot be Inserted / Played or CD is Ejected Right After Insertion	AV-19
	2. Proceed to Radio Receiver Power Source Circuit	AV-49
	3. Radio Receiver	-
CD sound skips	1. Proceed to CD Sound Skips	AV-21
	2. Radio Receiver	-
Radio broadcast cannot be received (bad reception)	1. Proceed to Radio Broadcast cannot be Received (Bad Reception)	AV-23
Poor sound quality in all modes (low volume)	1. Proceed to Poor Sound Quality in All Modes (Low Volume)	AV-25
	2. Proceed to Speaker Circuit	AV-35
	3. Radio Receiver	-
Radio receiver cannot be illuminated at night	1. Proceed to Illumination Circuit	AV-30
	2. Radio Receiver	-
External device sound cannot be heard or sound quality is bad. (Stereo jack is used.)	1. Proceed to Sound Signal Circuit between Radio Receiver and Stereo Jack Adapter	AV-43
	2. Stereo Jack Adapter	-
	3. Noise Filter	-
	4. Radio Receiver	-
Woofer system cannot be operated with woofer speaker switch (w/ woofer speaker)	1. Proceed to Woofer Speaker Switch Circuit	AV-46
	2. Radio Receiver	-
	3. Proceed to Woofer Speaker Power Source Circuit	AV-51

Steering Pad Switch Function

Symptom	Suspected area	See page
Audio system cannot be operated with steering pad switch	1. Proceed to Steering Pad Switch Circuit	AV-26
	2. Radio Receiver	-
Steering pad switch cannot be illuminated at night	1. Proceed to Illumination Circuit	AV-30
	2. Radio Receiver	-

TERMINALS OF ECU

1. CHECK RADIO RECEIVER

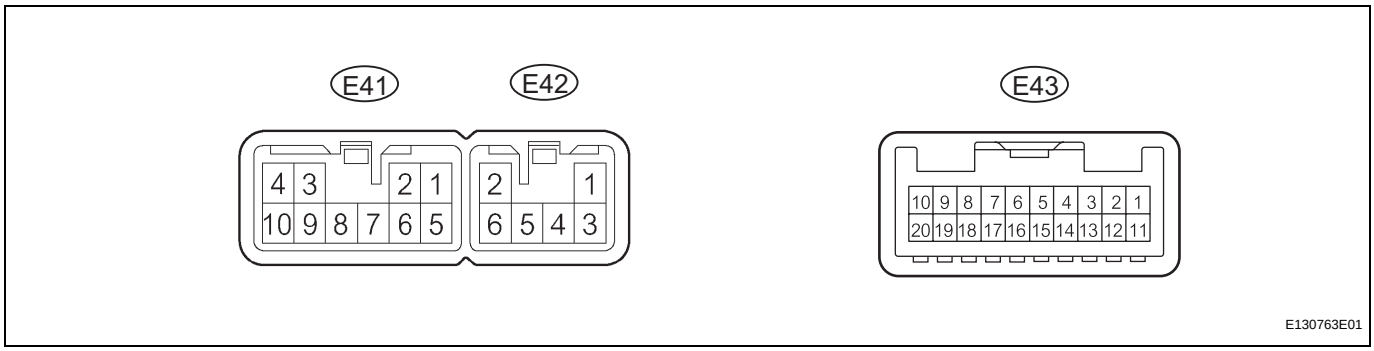

(a) Disconnect the E41 receiver connector.
(b) Measure the resistance and voltage of the wire harness side connector.

Standard:

Symbols (Terminal No.)	Wiring Color	Terminal Description	Condition	Specified Condition
GND (E41-7) - Body ground	BR - Body ground	Ground	Always	Below 1 Ω
B (E41-4) - GND (E41-7)	L-Y - BR	Battery	Always	11 to 14 V
ACC (E41-3) - GND (E41-7)	GR -BR	ACC power supply	Ignition switch OFF	Below 1 V
			Ignition switch ACC	11 to 14 V

HINT:
If the results are not as specified, there may be a malfunction in the wire harness.

(c) Reconnect the E41 receiver connector.
(d) Measure the voltage of the connector.

AV

Standard voltage:

Symbols (Terminal No.)	Wiring Color	Terminal Description	Condition	Specification
ILL+ (E41-10) - GND (E41-7)	G - BR	Illumination signal	Light control switch OFF	Below 1 V
			Light control switch TAIL	11 to 14 V
ILL- (E42-5) - GND (E41-7)	BR-W - BR	Illumination signal	Light control switch OFF	Below 1 V
			Light control switch TAIL	11 to 14 V
FR+ (E41-1) - GND (E41-7)	LG - BR	Sound signal (Front right)	Audio system is playing	A waveform synchronized with sound is output
FR- (E41-5) - GND (E41-7)	L - BR	Sound signal (Front right)	Audio system is playing	A waveform synchronized with sound is output
FL+ (E41-2) - GND (E41-7)	P - BR	Sound signal (Front left)	Audio system is playing	A waveform synchronized with sound is output
FL- (E41-6) - GND (E41-7)	V - BR	Sound signal (Front left)	Audio system is playing	A waveform synchronized with sound is output
RR+ (E42-1) - GND (E41-7)	R - BR	Sound signal (Rear right)	Audio system is playing	A waveform synchronized with sound is output
RR- (E42-3) - GND (E41-7)	W - BR	Sound signal (Rear right)	Audio system is playing	A waveform synchronized with sound is output
RL+ (E42-2) - GND (E41-7)	B - BR	Sound signal (Rear left)	Audio system is playing	A waveform synchronized with sound is output
RL- (E42-6) - GND (E41-7)	Y - BR	Sound signal (Rear left)	Audio system is playing	A waveform synchronized with sound is output
AMP (E41-9) - GND (E41-7)*1	P-L - BR	Woofer speaker signal	Woofer speaker switch OFF	Below 1 V
			Woofer speaker switch ON	11 to 14 V

Symbols (Terminal No.)	Wiring Color	Terminal Description	Condition	Specification
SWG (E43-6) - GND (E41-7)	W-R - BR	Steering pad switch ground	Always	Below 1 V
SW1 (E43-7) - GND (E41-7)	V-W - BR	Steering pad switch signal	Steering pad switch not operated	4 V or more
			SEEK+ switch pushed	Approximately 0.5 V
			SEEK- switch pushed	Approximately 0.9 V
			VOL+ switch pushed	Approximately 2.0 V
			VOL- switch pushed	Approximately 3.4 V
SW2 (E43-8) - GND (E41-7)	Y-B - BR	Steering pad switch signal	Steering pad switch not operated	4 V or more
			MODE switch pushed	Approximately 0.5 V
			ON HOOK switch pushed	Approximately 0.9 V
			OFF HOOK switch pushed	Approximately 2.0 V
			VOICE switch pushed	Approximately 3.4 V
ARI (E43-15) - GND (E41-7)	P - BR	Sound signal (Right)	External device is playing (When stereo jack adapter is used)	A waveform synchronized with sound is output
ASGN (E43-16) - GND (E41-7)	(Shielded) - BR	Ground (Shielded)	Always	Below 1 V
ALI (E43-17) - GND (E41-7)	L - BR	Sound signal (Left)	External device is playing (When stereo jack adapter is used)	A waveform synchronized with sound is output
AUXI (E43-19) - GND (E41-7)	P-G - BR	External device connection detection signal	External device is connected	Below 1 V

*1: w/ Woofer Speaker

HINT:

If the results are not as specified, there may be a malfunction in the wire harness.

Noise Occurs

INSPECTION PROCEDURE

1 CHECK SPEAKER INSTALLATION

(a) Check that each speaker is securely installed.
OK:
Speakers are installed securely.

HINT:
The radio has a noise prevention function to reduce noise when listening to the radio. If severe noise occurs, check whether the ground at the antenna mounting base and the noise prevention unit are installed and wired correctly.

Condition in Which Noise Occurs	Noise Type
Increases when accelerator pedal is depressed, and stops immediately when engine is stopped	Generator noise
When A/C or heater is operating	Blower motor noise
• When vehicle is rapidly accelerated on unpaved road • When ignition switch is ON	Fuel pump noise
• When horn switch is pressed and released • When horn switch is pressed and held down	Horn noise
Occurs faintly when engine is running, and stops immediately when engine is stopped	Ignition noise
When turn signal is operating	Flasher noise
When window washer is operating	Washer noise
When engine is running, and continues even when engine is stopped	Engine coolant temperature noise
When wipers are operating	Wiper noise
When brake pedal is depressed	Stop light switch noise
Other than above	Static electricity on vehicle

HINT:
- Use the table above to identify the part that is causing the noise. Check the noise filter on the part.
- To save time and avoid a misdiagnosis, first make sure that the noise is not originating from outside the vehicle.
- Troubleshoot noise problems in order of loudness, starting with the loudest noise.
- Setting the radio to a frequency that receives no signal may make recognition of the noise problem easier.

NG → **INSTALL SPEAKER PROPERLY**

OK

IDENTIFY NOISE SOURCE

AV

Pressing Power Switch does not Turn on System

INSPECTION PROCEDURE

1	CHECK WHETHER RAPID TEMPERATURE CHANGE OCCURRED IN CABIN

(a) Check whether or not a rapid temperature change occurred in the cabin.
OK:
Rapid temperature change occurred.
HINT:
Rapid temperature changes create condensation inside the radio receiver, which may cause a short circuit.

NG → **REPLACE RADIO RECEIVER**

OK

PROCEED TO NEXT CIRCUIT INSPECTION SHOWN IN PROBLEM SYMPTOMS TABLE

No Sound can be Heard from Speakers

INSPECTION PROCEDURE

1	CHECK RADIO RECEIVER (VOLUME AND MUTE SWITCH)

(a) Check the radio receiver setting.
  (1) Check that the volume is not set to minimum.
  (2) Check that MUTE is OFF.
  OK:
  Malfunction disappears.

NG → **PROCEED TO NEXT CIRCUIT INSPECTION SHOWN IN PROBLEM SYMPTOMS TABLE**

OK

END

Sound Quality is Bad Only when CD is Played (Volume is Too Low)

INSPECTION PROCEDURE

1	**OPERATION USING ANOTHER CD**

(a) Replace the CD with a normal one and check if the same problem occurs again.
OK:
Malfunction disappears.

NG → **PROCEED TO NEXT CIRCUIT INSPECTION SHOWN IN PROBLEM SYMPTOMS TABLE**

OK

CD IS FAULTY

CD cannot be Ejected

INSPECTION PROCEDURE

1	CHECK OPERATION

(a) Press the CD EJECT switch of the radio receiver for 2 seconds or more to check whether the CD can be ejected.
OK:
CD is ejected.

NG → **REPLACE RADIO RECEIVER**

OK ↓

2	OPERATION USING ANOTHER CD

(a) Replace the CD with a normal one and check that the CD can be ejected.
OK:
CD is ejected.

NG → **REPLACE RADIO RECEIVER**

OK ↓

CD IS FAULTY

CD cannot be Inserted or is Ejected Right After Insertion

INSPECTION PROCEDURE

1	CHECK CD

(a) Make sure that the CD is a normal audio CD, and that it is not deformed, flawed, stained, burred or otherwise defective.
OK:
Normal audio CD.
HINT:
Translucent or uniquely-shaped CDs cannot be played.

NG → **CD IS FAULTY**

OK ↓

2	CHECK THAT CD HAS BEEN INSERTED PROPERLY

(a) Check whether or not the CD was inserted upside down.
OK:
CD was properly inserted.

NG → **INSERT CD PROPERLY**

OK ↓

AV

3	CLEAN CD

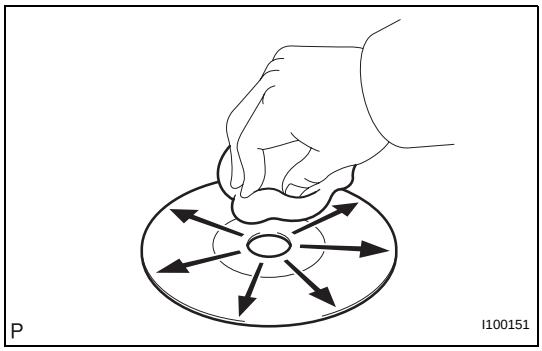

(a) Clean the disc by wiping the CD's dataside radially with a soft cloth.
OK:
Malfunction disappears.
NOTICE:
Do not use a conventional record cleaner or anti-static preservative.

OK → **CD WAS DIRTY**

NG ↓

4	REPLACE CD

(a) Replace the CD with a normal one and check if the same problem occurs again.
OK:
Malfunction disappears.

NG → **REPLACE RADIO RECEIVER**

OK

CD IS FAULTY

CD Sound Skips

INSPECTION PROCEDURE

HINT:
The sound may skip when driving on an unpaved road.

1	CLEAN CD

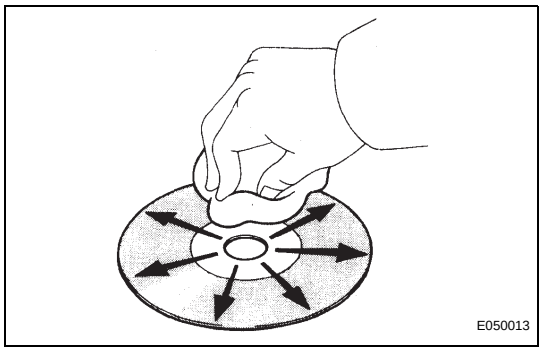

(a) If the disc is dirty, clean the disc by wiping the CD's dataside radially with a soft cloth.
OK:
Malfunction disappears.
NOTICE:
Do not use a conventional record cleaner or anti-static preservative.

OK → **CD WAS DIRTY**

NG

2	OPERATION USING ANOTHER CD

(a) Replace the CD with a normal one and check if the same problem occurs again.
OK:
Malfunction disappears.

OK → **CD IS FAULTY**

NG

3	CHECK RADIO RECEIVER INSTALLATION

(a) Check the installation condition of the radio receiver.
OK:
Installed properly.

NG → **INSTALL RADIO RECEIVER PROPERLY**

OK

4	CHECK WHETHER RAPID TEMPERATURE CHANGE OCCURRED IN CABIN

(a) Check whether or not a rapid temperature change occurred in the cabin.
OK:
Rapid temperature change occurred.
HINT:
Rapid temperature changes create condensation inside the CD player, which may prevent CDs from being played.

AV

NG → **REPLACE RADIO RECEIVER**

OK

CONDENSATION DUE TO TEMPERATURE CHANGE (LET IT SIT FOR A WHILE BEFORE USING)

Radio Broadcast cannot be Received (Bad Reception)

INSPECTION PROCEDURE

1	CHECK WHETHER RAPID TEMPERATURE CHANGE OCCURRED IN CABIN

(a) Check whether the radio auto-search functions properly.
(1) Tune the radio using the auto-search function and check that it operates normally.
OK:
The radio auto-search functions properly.

OK → **END**

NG

2	CHECK OPTIONAL COMPONENTS

(a) Check whether any optional components, such as telephone antenna, are installed.
OK:
Optional component(s) installed.

OK → **EFFECT FROM OPTIONAL COMPONENTS**

NG

AV

3	CHECK ANTENNA FOR NOISE PRODUCTION

(a) With the ignition switch ON, turn on the radio and select the AM mode.
(b) Place the tip of a screwdriver on the antenna and check that noise is heard from the speakers.
OK:
Noise occurs.

OK → **REPLACE RADIO RECEIVER**

NG

4	INSPECT RADIO RECEIVER (ANTENNA)

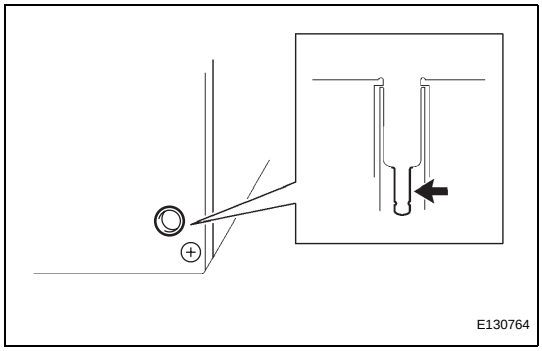

(a) Remove the antenna plug of the radio receiver.
(b) With the radio receiver connector connected, turn the ignition switch on (ACC).
(c) Turn on the radio and select the AM mode.
(d) Place a flat-head screwdriver or piece of metal, such as a thin wire, on the antenna jack of the radio receiver. Check that noise is heard from the speakers.
OK:
Noise occurs.

NG → **REPLACE ROOF ANTENNA POLE SUB-ASSEMBLY**

OK

REPLACE RADIO RECEIVER

Poor Sound Quality in All Modes (Low Volume)

INSPECTION PROCEDURE

1	ADJUST SOUND QUALITY

(a) Operate the radio receiver to adjust the sound quality.
OK:
Sound quality returns to normal.

OK → **SYSTEM IS OK (POOR SOUND QUALITY)**

NG

2	COMPARE WITH ANOTHER VEHICLE OF SAME MODEL

(a) Compare the vehicle with another vehicle that has a normally functioning audio system. Check if there is any difference in the sound quality.
OK:
No difference is found.

OK → **SYSTEM IS OK (POOR SOUND QUALITY)**

NG

PROCEED TO NEXT CIRCUIT INSPECTION SHOWN IN PROBLEM SYMPTOMS TABLE

Steering Pad Switch Circuit

DESCRIPTION

This circuit sends an operation signal from the steering pad switch to the radio receiver.
If there is an open in the circuit, the audio system cannot be operated using the steering pad switch.
If there is a short in the circuit, the same condition as that when the switch is continuously depressed occurs.
Therefore, the radio receiver cannot be operated using the steering pad switch, and also the radio receiver itself cannot function.

WIRING DIAGRAM

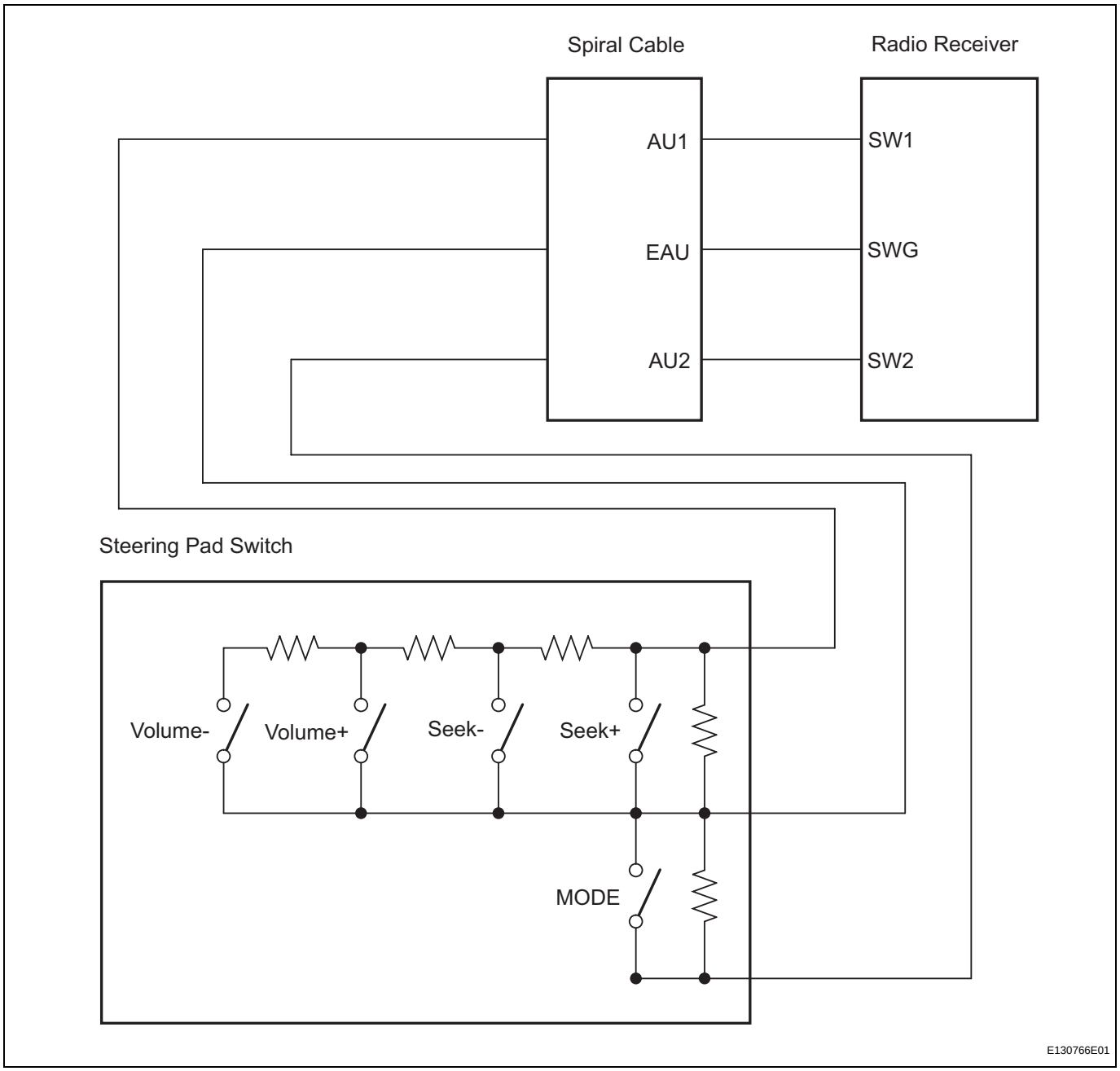

AV

INSPECTION PROCEDURE

NOTICE:

The vehicle is equipped with an SRS (Supplemental Restraint System) which includes components such as airbags. Before servicing (including removal or installation of parts), be sure to read the precautionary notice for the Supplemental Restraint System (See page RS-1).

1 INSPECT RADIO RECEIVER

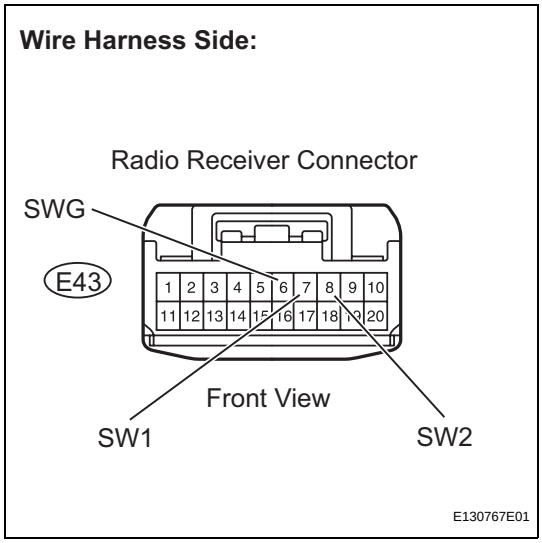

(a) Disconnect the E43 radio receiver connector.

(b) Measure the resistance.

Standard resistance

Tester connection	Condition	Specified condition
E43-7 (SW1) - E43-6 (SWG)	No switches pushed	Approximately 100 kΩ
E43-7 (SW1) - E43-6 (SWG)	SEEK+ switch pushed	Approximately 0 Ω
E43-7 (SW1) - E43-6 (SWG)	SEEK- switch pushed	Approximately 0.3 kΩ
E43-7 (SW1) - E43-6 (SWG)	VOL+ switch pushed	Approximately 1 kΩ
E43-7 (SW1) - E43-6 (SWG)	VOL- switch pushed	Approximately 3.2 kΩ
E43-8 (SW2) - E43-6 (SWG)	No switches pushed	Approximately 100 kΩ
E43-8 (SW2) - E43-6 (SWG)	MODE switch pushed	Approximately 0 Ω

(c) Reconnect the radio receiver connector.

NG → **Go to step 2**

OK

PROCEED TO NEXT CIRCUIT INSPECTION SHOWN IN PROBLEM SYMPTOMS TABLE

2 INSPECT STEERING PAD SWITCH ASSEMBLY

(a) Disconnect the E17 steering pad switch assembly connector.

Wire Harness Side:

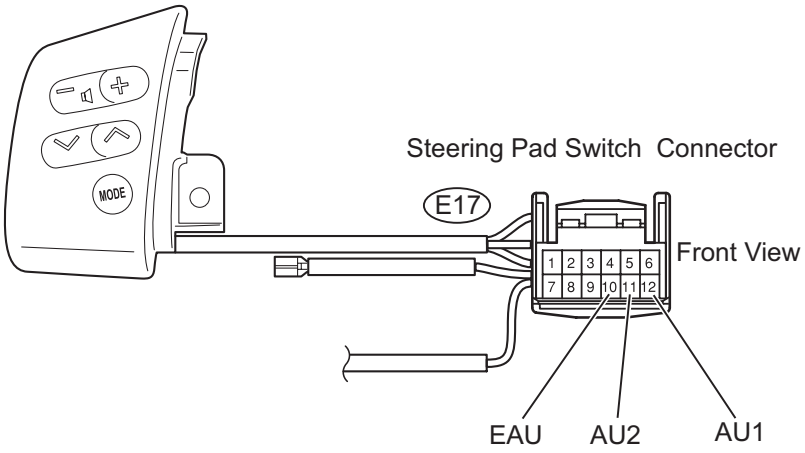

(b) Measure the resistance.

Standard resistance

Tester connection	Condition	Specified condition
E17-12 (AU1) - E17-10 (EAU)	No switches pushed	Approximately 100 kΩ
E17-12 (AU1) - E17-10 (EAU)	SEEK+ switch pushed	Approximately 0 Ω
E17-12 (AU1) - E17-10 (EAU)	SEEK- switch pushed	Approximately 0.3 kΩ
E17-12 (AU1) - E17-10 (EAU)	VOL+ switch pushed	Approximately 1 kΩ
E17-12 (AU1) - E17-10 (EAU)	VOL- switch pushed	Approximately 3.2 kΩ
E17-11 (AU2) - E17-10 (EAU)	No switches pushed	Approximately 100 kΩ
E17-11 (AU2) - E17-10 (EAU)	MODE switch pushed	Approximately 0 Ω

(c) Reconnect the steering pad switch assembly connector.

NG → **REPLACE STEERING PAD SWITCH ASSEMBLY**

OK

AV

3	INSPECT SPIRAL CABLE

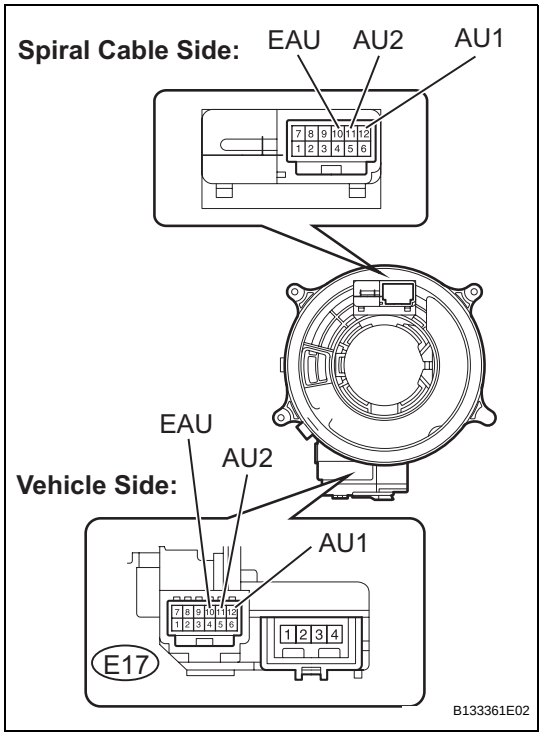

(a) Disconnect the E17 steering pad switch assembly and spiral cable connectors.
(b) Measure the resistance.
Standard resistance

Tester connection	Specified condition
Terminal 10 (EAU) main switch side - EAU (E17-10)	Below 1 Ω
Terminal 12 (AU1) main switch side - AU1 (E17-12)	Below 1 Ω
Terminal 11 (AU2) main switch side - AU2 (E17-11)	Below 1 Ω

NOTICE:
The spiral cable is an important part of the SRS airbag system. Incorrect removal or installation of the spiral cable may prevent the airbag from deploying. Be sure to read the page shown in the brackets.
HINT:
- Removal (See page RS-357)
- Installation (See page RS-358)

(c) Reconnect the steering pad switch assembly connector.
(d) Reconnect the spiral cable connector.

NG → **REPLACE SPIRAL CABLE**

AV

OK

REPAIR OR REPLACE HARNESS OR CONNECTOR (SPIRAL CABLE - RADIO RECEIVER)

Illumination Circuit

DESCRIPTION

Power is supplied to the radio receiver and steering pad switch assembly illumination when the light control switch is in the TAIL or HEAD position.

WIRING DIAGRAM

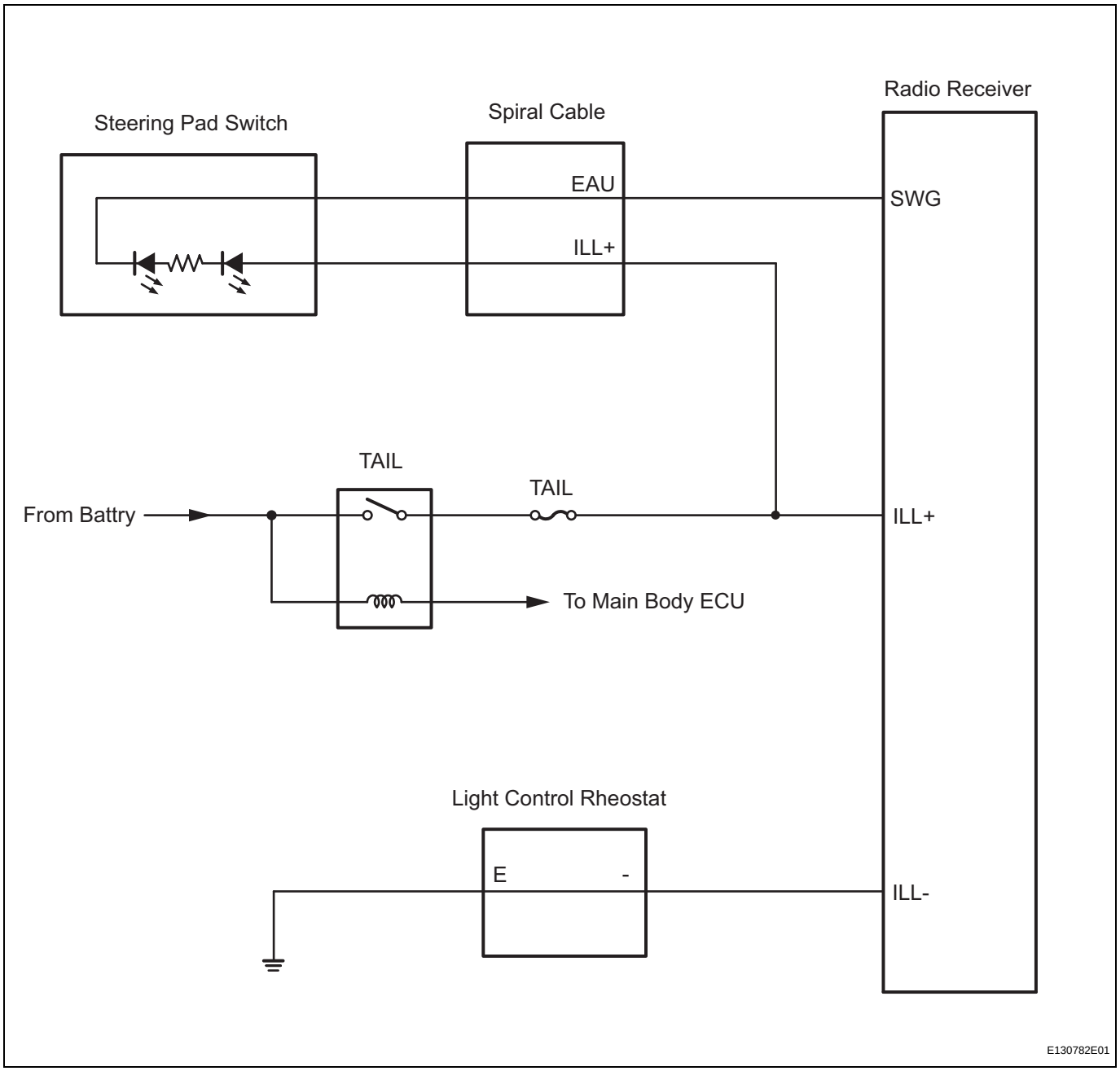

INSPECTION PROCEDURE

NOTICE:

The vehicle is equipped with an SRS (Supplemental Restraint System) which includes components such as airbags. Before servicing (including removal or installation of parts), be sure to read the precautionary notice for the supplemental restraint system (See page RS-1).

1	CHECK ILLUMINATION

(a) Check if the illumination for the radio receiver, steering pad switch, or others (back sonar switch, hazard switch, etc.) comes on when the light control switch is turned to the HEAD or TAIL position.

Result

Result	Proceed to
Illumination comes on for all components except steering pad switch.	A
Illumination comes on for all components except radio receiver.	B
No illumination comes on (radio receiver, back sonar switch, hazard switch, etc.).	C

B → GO TO LIGHTING SYSTEM

C → Go to step 6

A

2	INSPECT STEERING PAD SWITCH ASSEMBLY

(a) Disconnect the steering pad switch assembly connector.
(b) Connect the positive (+) lead to terminal ILL+ and the negative (-) lead to terminal EAU of the steering pad switch assembly connector.

AV

Wire Harness Side:

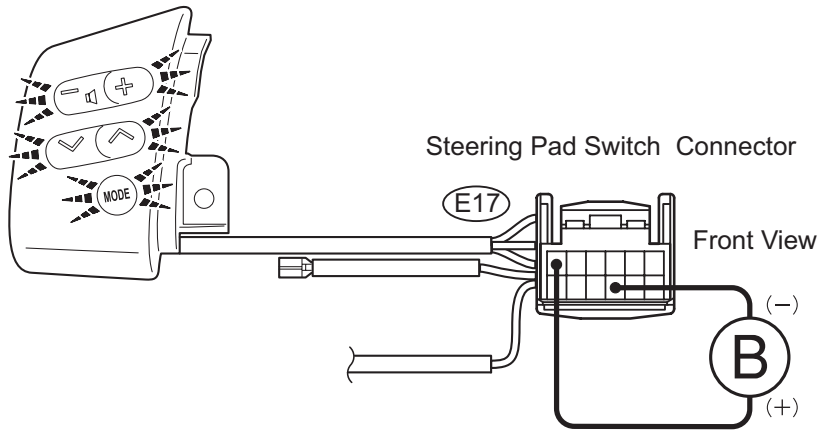

E130788E01

(c) Check if the illumination for the steering pad switch assembly comes on.

OK:

Illumination for the steering pad switch assembly comes on.

NG → REPLACE STEERING PAD SWITCH ASSEMBLY

OK

3 INSPECT SPIRAL CABLE

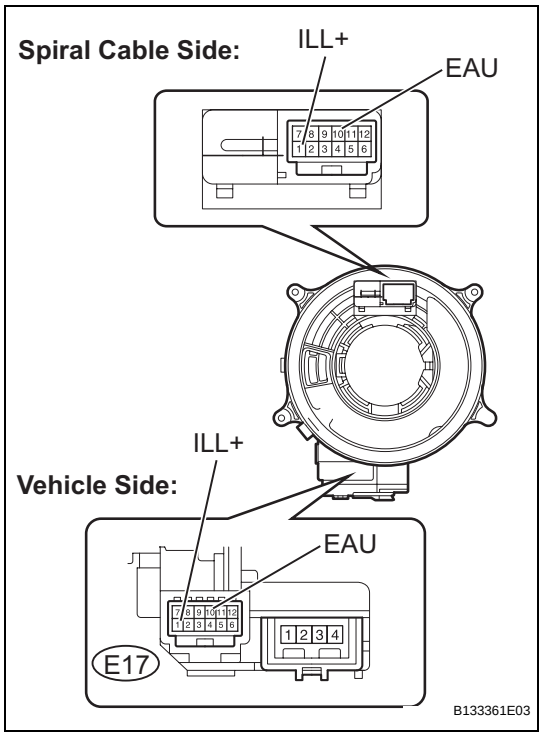

(a) Disconnect the E17 steering pad switch assembly and spiral cable connectors.
(b) Measure the resistance.
Standard resistance

Tester connection	Specified condition
Terminal 10 (EAU) main switch side - EAU (E17-10)	Below 1 Ω
Terminal 1 (ILL+) main switch side - ILL+ (E17-1)	Below 1 Ω

NOTICE:
The spiral cable is an important part of the SRS airbag system. Incorrect removal or installation of the spiral cable may prevent the airbag from deploying. Be sure to read the page shown in the brackets.
HINT:
- Removal (See page RS-357)
- Installation (See page RS-358)

(c) Reconnect the steering pad switch assembly connector.
(d) Reconnect the spiral cable connector.

NG → **REPLACE SPIRAL CABLE**

OK

4 CHECK HARNESS AND CONNECTOR (BATTERY - SPIRAL CABLE)

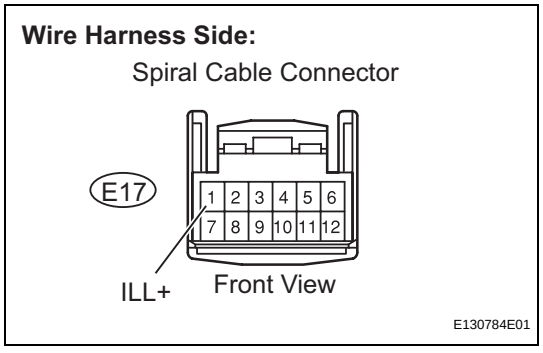

(a) Disconnect the E17 spiral cable connector.
(b) Measure the voltage.
Standard voltage

Tester connection	Condition	Specified condition
E17-1 (ILL+) - Body ground	Light control SW TAIL or HEAD	11 to 14 V

(c) Reconnect the spiral cable connector.

NG → **REPAIR OR REPLACE HARNESS OR CONNECTOR**

OK

AV

5 CHECK HARNESS AND CONNECTOR (SPIRAL CABLE - RADIO RECEIVER)

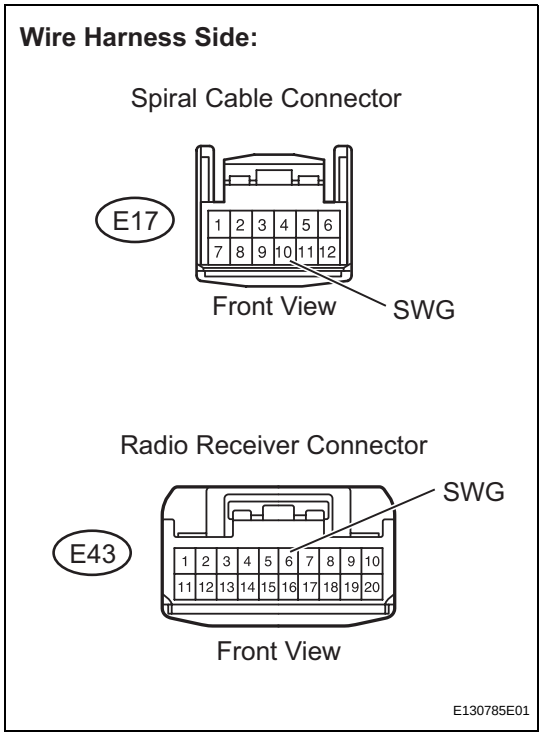

(a) Disconnect the E43 receiver connector.
(b) Disconnect the E17 spiral cable connector.
(c) Measure the resistance.

Standard resistance

Tester Connection	Specified Condition
E43-6 (SWG) - E17-10 (SWG)	Below 1 Ω
E43-6 (SWG) or E17-10 (SWG) - Body ground	10 kΩ or higher

(d) Reconnect the receiver connector.
(e) Reconnect the spiral cable connector.

NG → **REPAIR OR REPLACE HARNESS OR CONNECTOR**

OK

AV

REPLACE RADIO RECEIVER

6 CHECK HARNESS AND CONNECTOR (BATTERY - RADIO RECEIVER)

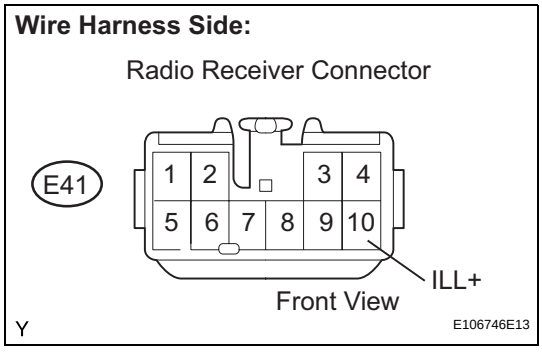

(a) Disconnect the E41 receiver connector.
(b) Measure the voltage.

Standard voltage

Tester connection	Condition	Specified condition
E41-10 (ILL+) - Body ground	Light control SW TAIL or HEAD	11 to 14 V

(c) Reconnect the receiver connector.

NG → **REPAIR OR REPLACE HARNESS OR CONNECTOR**

OK

7	CHECK HARNESS AND CONNECTOR (RADIO RECEIVER - LIGHT CONTROL RHEOSTAT)

Wire Harness Side:

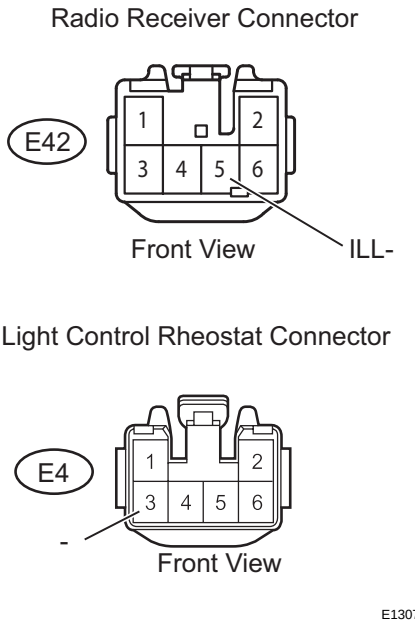

(a) Disconnect the E42 receiver connector.
(b) Disconnect the E4 light control rheostat connector.
(c) Measure the resistance.

Standard resistance

Tester Connection	Specified Condition
E42-6 (ILL-) - E4-3 (-)	Below 1 Ω
E42-6 (ILL-) or E4-3 (-) - Body ground	10 kΩ or higher

(d) Reconnect the receiver connector.
(e) Reconnect the light control rheostat connector.

NG → **REPAIR OR REPLACE HARNESS OR CONNECTOR**

OK

RADIO RECEIVER

Speaker Circuit

DESCRIPTION

Sound signals that have been amplified by the stereo component amplifier are sent to the speakers from the radio receiver through this circuit. If there is a short in this circuit, the sound cannot be heard from the speakers even though there is no malfunction in the speakers.

WIRING DIAGRAM

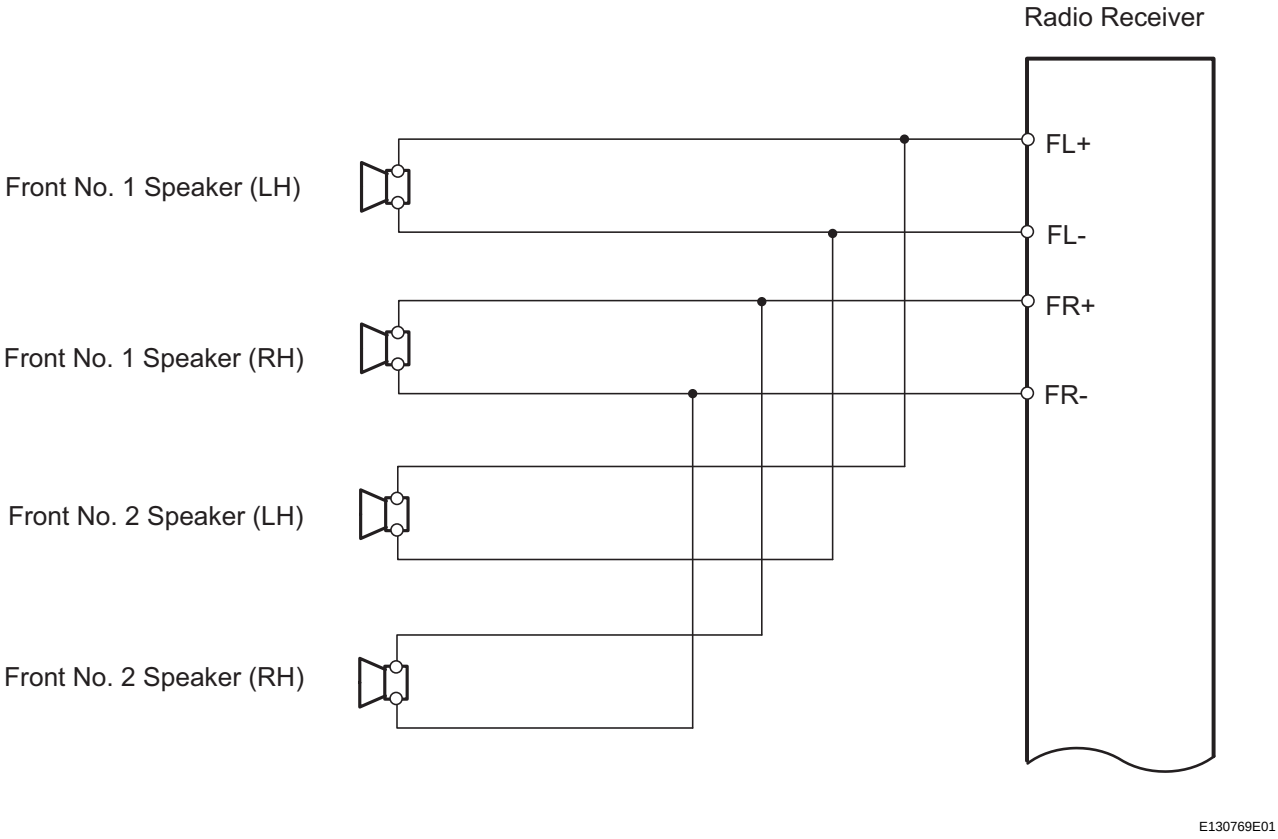

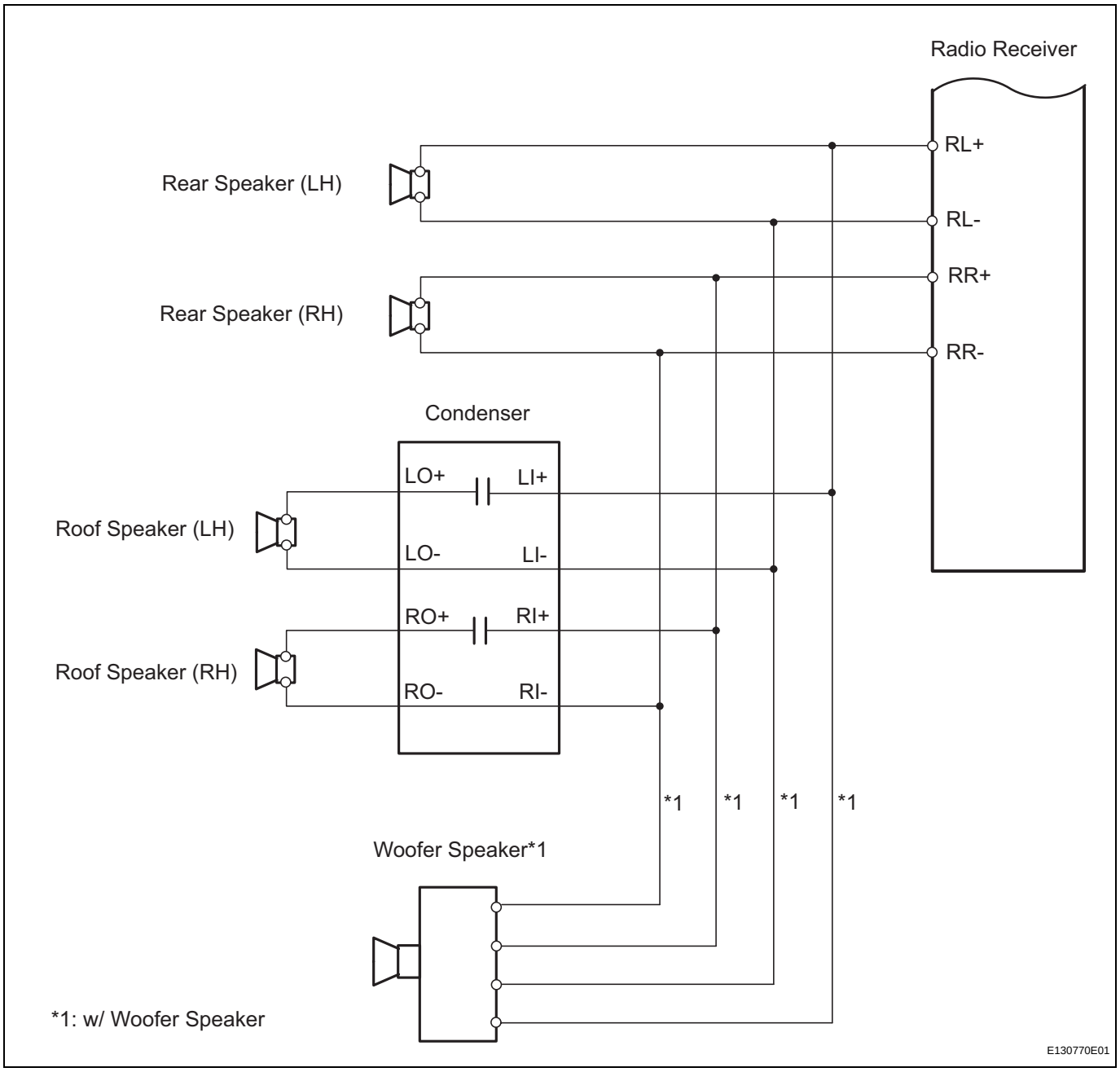

INSPECTION PROCEDURE

1	CHECK SPEAKER

(a) Check whether sound is emitted from each speaker.

Result

Result	Proceed to
Front No. 1 speakers have problems	A
Front No. 2 speakers have problems	B
Rear speakers have problems	C
Woofer speaker has problems (w/ woofer speaker)	D
Roof speakers have problems	E

AV

B	Go to step 4
C	Go to step 6
D	Go to step 8
E	Go to step 10

A

2 INSPECT FRONT NO. 1 SPEAKERS

(a) Check the left and right front No. 1 speakers (See page AV-58).
OK:
Front No. 1 speakers are normal.

NG → **REPLACE FRONT NO. 1 SPEAKER**

OK

3 CHECK HARNESS AND CONNECTOR (RADIO RECEIVER - FRONT NO. 1 SPEAKER)

(a) Disconnect the E41 receiver connector.
(b) Disconnect the G4 and H4 front No. 1 speaker connectors.
(c) Measure the resistance.
Standard resistance

Tester Connection	Specified Condition
E41-2 (FL+) - H4-1	Below 1 Ω
E41-6 (FL-) - H4-2	Below 1 Ω
E41-2 (FL+) or H4-1 - Body ground	10 kΩ or higher
E41-6 (FL-) or H4-2 - Body ground	10 kΩ or higher
E41-1 (FR+) - G4-1	Below 1 Ω
E41-5 (FR-) - G4-2	Below 1 Ω
E41-1 (FR+) or G4-1 - Body ground	10 kΩ or higher
E41-5 (FR-) or G4-2 - Body ground	10 kΩ or higher

(d) Reconnect the receiver connector.
(e) Reconnect the front No. 1 speaker connectors.

NG → **REPAIR OR REPLACE HARNESS OR CONNECTOR**

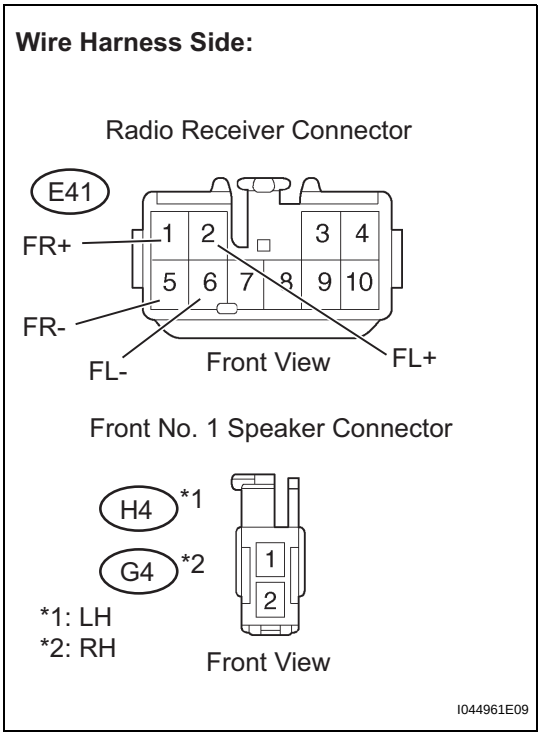

OK

PROCEED TO NEXT CIRCUIT INSPECTION SHOWN IN PROBLEM SYMPTOMS TABLE

4	INSPECT FRONT NO. 2 SPEAKERS

(a) Check the left and right front No. 2 speakers (See page AV-61).
OK:
Front No. 2 speakers are normal.

NG → **REPLACE FRONT NO. 2 SPEAKER**

OK ↓

5	CHECK HARNESS AND CONNECTOR (RADIO RECEIVER - FRONT NO. 2 SPEAKER)

Wire Harness Side:

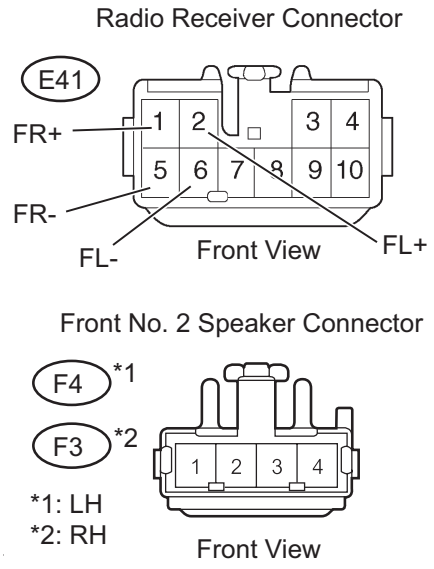

E130777E01

(a) Disconnect the E41 receiver connector.
(b) Disconnect the F3 and F4 front No. 2 speaker connectors.
(c) Measure the resistance.
Standard resistance

Tester Connection	Specified Condition
E41-2 (FL+) - F4-4	Below 1 Ω
E41-6 (FL-) - F4-3	Below 1 Ω
E41-2 (FL+) or F4-4 - Body ground	10 kΩ or higher
E41-6 (FL-) or F4-3 - Body ground	10 kΩ or higher
E41-1 (FR+) - F3-4	Below 1 Ω
E41-5 (FR-) - F3-3	Below 1 Ω
E41-1 (FR+) or F3-4 - Body ground	10 kΩ or higher
E41-5 (FR-) or F3-3 - Body ground	10 kΩ or higher

(d) Reconnect the receiver connector.
(e) Reconnect the front No. 2 speaker connectors.

NG → **REPAIR OR REPLACE HARNESS OR CONNECTOR**

OK ↓

PROCEED TO NEXT CIRCUIT INSPECTION SHOWN IN PROBLEM SYMPTOMS TABLE

6	INSPECT REAR SPEAKERS

(a) Check the left and right rear speakers (See page AV-69).
OK:
Rear speakers are normal.

NG → **REPLACE REAR SPEAKER**

OK ↓

AV

7	CHECK HARNESS AND CONNECTOR (RADIO RECEIVER - REAR SPEAKER)

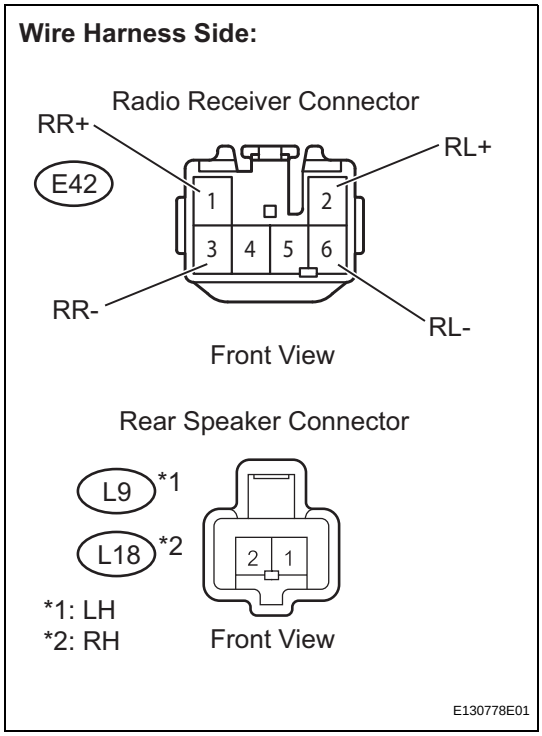

(a) Disconnect the E42 receiver connector.
(b) Disconnect the L9 and L18 rear speaker connectors.
(c) Measure the resistance.
Standard resistance

Tester Connection	Specified Condition
E42-2 (RL+) - L9-1	Below 1 Ω
E42-6 (RL-) - L9-2	Below 1 Ω
E42-2 (RL+) or L9-1 - Body ground	10 kΩ or higher
E42-6 (RL-) or L9-2 - Body ground	10 kΩ or higher
E42-1 (RR+) - L18-1	Below 1 Ω
E42-3 (RR-) - L18-2	Below 1 Ω
E42-1 (RR+) or L18-1 - Body ground	10 kΩ or higher
E42-3 (RR-) or L18-2 - Body ground	10 kΩ or higher

(d) Reconnect the receiver connector.
(e) Reconnect the rear speaker connectors.

NG → **REPAIR OR REPLACE HARNESS OR CONNECTOR**

OK

AV

PROCEED TO NEXT CIRCUIT INSPECTION SHOWN IN PROBLEM SYMPTOMS TABLE

8	INSPECT WOOFER SPEAKER

(a) Check the woofer speaker.
OK:
Woofer speaker is normal.

NG → **REPLACE WOOFER SPEAKER**

OK

9	CHECK HARNESS AND CONNECTOR (RADIO RECEIVER - WOOFER SPEAKER)

Wire Harness Side:

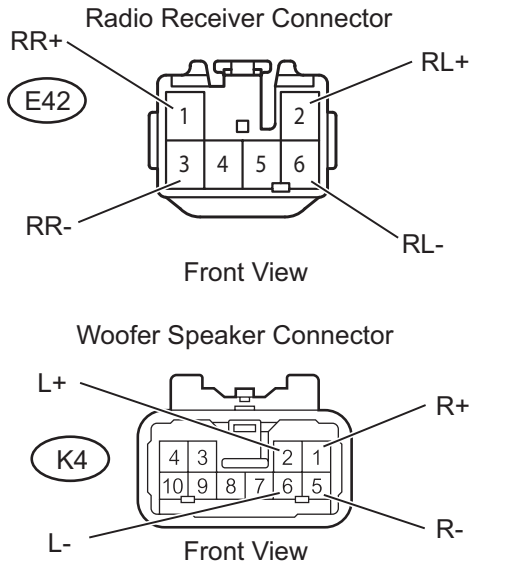

E130779E01

(a) Disconnect the E42 receiver connector.
(b) Disconnect the K4 woofer speaker connector.
(c) Measure the resistance.
Standard resistance

Tester Connection	Specified Condition
E42-2 (RL+) - K4-2 (L+)	Below 1 Ω
E42-6 (RL-) - K4-6 (L-)	Below 1 Ω
E42-2 (RL+) orK4-2 (L+) - Body ground	10 kΩ or higher
E42-6 (RL-) or K4-6 (L-) - Body ground	10 kΩ or higher
E42-1 (RR+) - K4-1 (R+)	Below 1 Ω
E42-3 (RR-) - K4-5 (R-)	Below 1 Ω
E42-1 (RR+) or K4-1 (R+) - Body ground	10 kΩ or higher
E42-3 (RR-) or K4-5 (R-) - Body ground	10 kΩ or higher

(d) Reconnect the receiver connector.
(e) Reconnect the woofer speaker connector.

NG → REPAIR OR REPLACE HARNESS OR CONNECTOR

OK

AV

PROCEED TO NEXT CIRCUIT INSPECTION SHOWN IN PROBLEM SYMPTOMS TABLE

10	INSPECT ROOF SPEAKERS

(a) Check the left and right roof speakers (See page AV-82).
OK:
Roof speakers are normal.

NG → REPLACE ROOF SPEAKER

OK

11 CHECK HARNESS AND CONNECTOR (RADIO RECEIVER - CONDENSER)

Wire Harness Side:

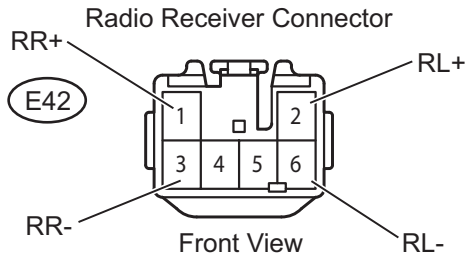

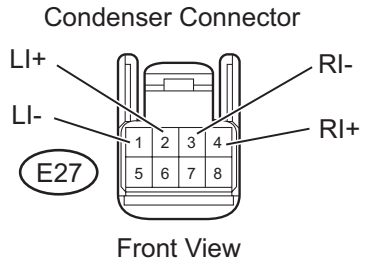

E130789E01

(a) Disconnect the E42 receiver connector.
(b) Disconnect the E27 condenser connector.
(c) Measure the resistance.

Standard resistance

Tester Connection	Specified Condition
E42-2 (RL+) - E27-2 (LI+)	Below 1 Ω
E42-6 (RL-) - E27-1 (LI-)	Below 1 Ω
E42-2 (RL+) or E27-2 (LI+) - Body ground	10 kΩ or higher
E42-6 (RL-) or E27-1 (LI-) - Body ground	10 kΩ or higher
E42-1 (RR+) - E27-4 (RI+)	Below 1 Ω
E42-3 (RR-) - E27-3 (RI-)	Below 1 Ω
E42-1 (RR+) or E27-4 (RI+) - Body ground	10 kΩ or higher
E42-3 (RR-) or E27-3 (RI-) - Body ground	10 kΩ or higher

(d) Reconnect the receiver connector.
(e) Reconnect the condenser connector.

NG → **REPAIR OR REPLACE HARNESS OR CONNECTOR**

OK

AV

12 CHECK HARNESS AND CONNECTOR (CONDENSER - ROOF SPEAKER)

Wire Harness Side:

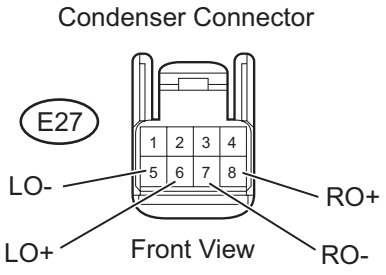

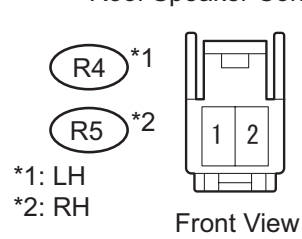

E130790E02

(a) Disconnect the E42 receiver connector.
(b) Disconnect the E27 condenser connector.
(c) Measure the resistance.

Standard resistance

Tester Connection	Specified Condition
E27-2 (LO+) - R4-1	Below 1 Ω
E27-5 (LO-) - R4-2	Below 1 Ω
E27-2 (LO+) or R4-1 - Body ground	10 kΩ or higher
E27-5 (LO-) or R4-2 - Body ground	10 kΩ or higher
E27-8 (RO+) - R5-1	Below 1 Ω
E27-7 (RO-) - R5-2	Below 1 Ω
E27-8 (RO+) or R5-1 - Body ground	10 kΩ or higher
E27-7 (RO-) or R5-2 - Body ground	10 kΩ or higher

(d) Reconnect the receiver connector.
(e) Reconnect the condenser connector.

NG → **REPAIR OR REPLACE HARNESS OR CONNECTOR**

OK

13	REPLACE CONDENSER

(a) Temporarily replace the condenser with a new or normally functioning one.
(b) Check that the sound is normal.
OK:
Sound is normal.

NG → **END**

OK

PROCEED TO NEXT CIRCUIT INSPECTION SHOWN IN PROBLEM SYMPTOMS TABLE

Sound Signal Circuit between Radio Receiver and Stereo Jack Adapter

DESCRIPTION

The stereo jack adapter sends an external device sound signal to the radio receiver through this circuit. The sound signal that has been sent is amplified by the stereo component amplifier, and then is sent to the speakers.
If there is an open or short in the circuit, sound cannot be heard from the speakers even if there is no malfunction in the stereo component amplifier, radio receiver, or speakers.

WIRING DIAGRAM

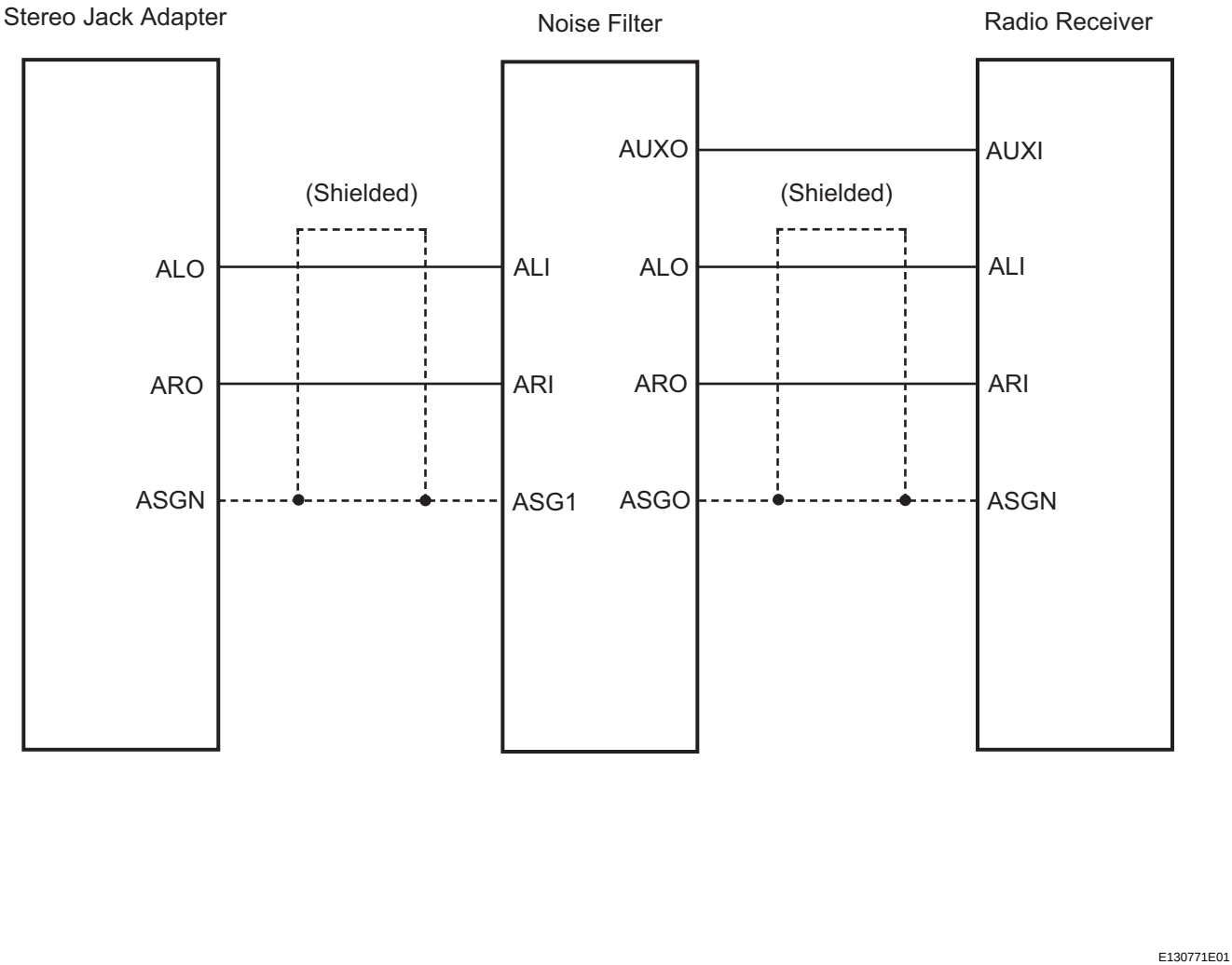

AV

INSPECTION PROCEDURE

1 CHECK HARNESS AND CONNECTOR (RADIO RECEIVER - NOISE FILTER)

Wire Harness Side:

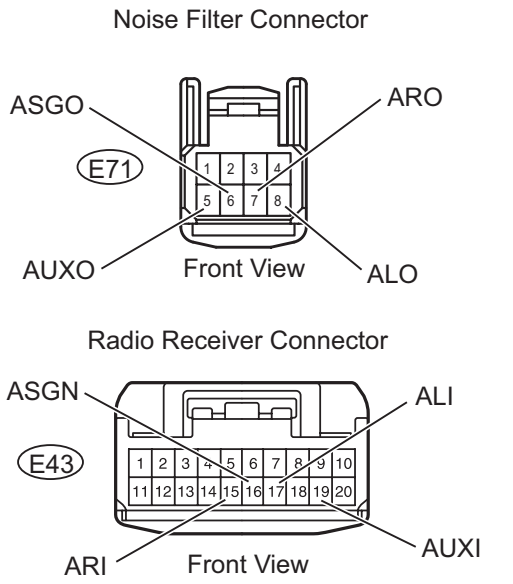

(a) Disconnect the E71 noise filter and E43 radio receiver connectors.
(b) Measure the resistance.
Standard resistance

Tester connection	Specified condition
E71-5 (AUXO) - E43-19 (AUXI)	Below 1 Ω
E71-8 (ALO) - E43-17 (ALI)	Below 1 Ω
E71-7 (ARO) - E43-15 (ARI)	Below 1 Ω
E71-6 (ASGO) - E43-16 (ASGN)	Below 1 Ω
E71-5 (AUXO) or E43-19 (AUXI) - Body ground	10 kΩ or higher
E71-8 (ALO) or E43-17 (ALI) - Body ground	10 kΩ or higher
E71-7 (ARO) or E43-15 (ARI) - Body ground	10 kΩ or higher
E71-6 (ASGO) or E43-16 (ASGN) - Body ground	10 kΩ or higher

(c) Reconnect the noise filter connector.
(d) Reconnect the radio receiver connector.

MG → **REPAIR OR REPLACE HARNESS OR CONNECTOR**

OK

2 CHECK HARNESS AND CONNECTOR (NOISE FILTER - STEREO JACK ADAPTER)

Wire Harness Side:

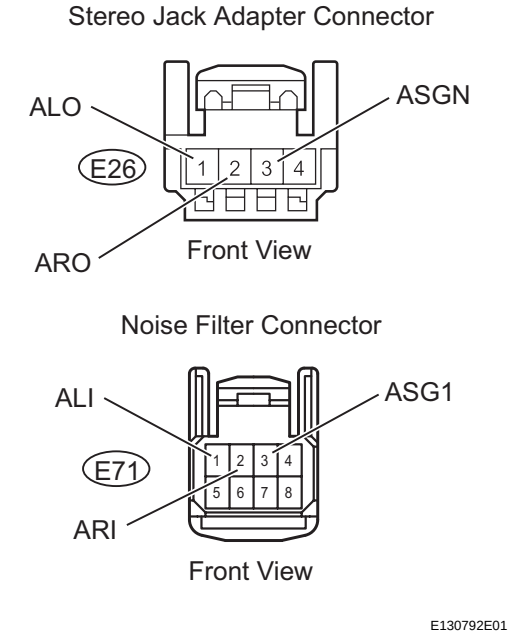

(a) Disconnect the E26 stereo jack adapter and E71 noise filter connectors.
(b) Measure the resistance.
Standard resistance

Tester connection	Specified condition
E26-1 (ALO) - E71-1 (ALI)	Below 1 Ω
E26-2 (ARO) - E71-2 (ARI)	Below 1 Ω
E26-3 (ASGN) - E71-3 (ASG1)	Below 1 Ω
E26-1 (ALO) or E71-1 (ALI) - Body ground	10 kΩ or higher
E26-2 (ARO) or E71-2 (ARI) - Body ground	10 kΩ or higher
E26-3 (ASGN) or E71-3 (ASG1) - Body ground	10 kΩ or higher

(c) Reconnect the stereo jack adapter connector.
(d) Reconnect the noise filter connector.

NG → **REPAIR OR REPLACE HARNESS OR CONNECTOR**

AV

OK

PROCEED TO NEXT CIRCUIT INSPECTION SHOWN IN PROBLEM SYMPTOMS TABLE

Woofer Speaker Switch Circuit

DESCRIPTION

This is the circuit between the radio receiver and the woofer speaker. When the woofer speaker switch is turned ON and OFF, the woofer speaker is activated and deactivated through control of the signals between the receiver and the woofer speaker.
If there is an open or short in the circuit, sound cannot be heard from the woofer speaker even if there is no malfunction in the radio receiver or woofer speaker.

WIRING DIAGRAM

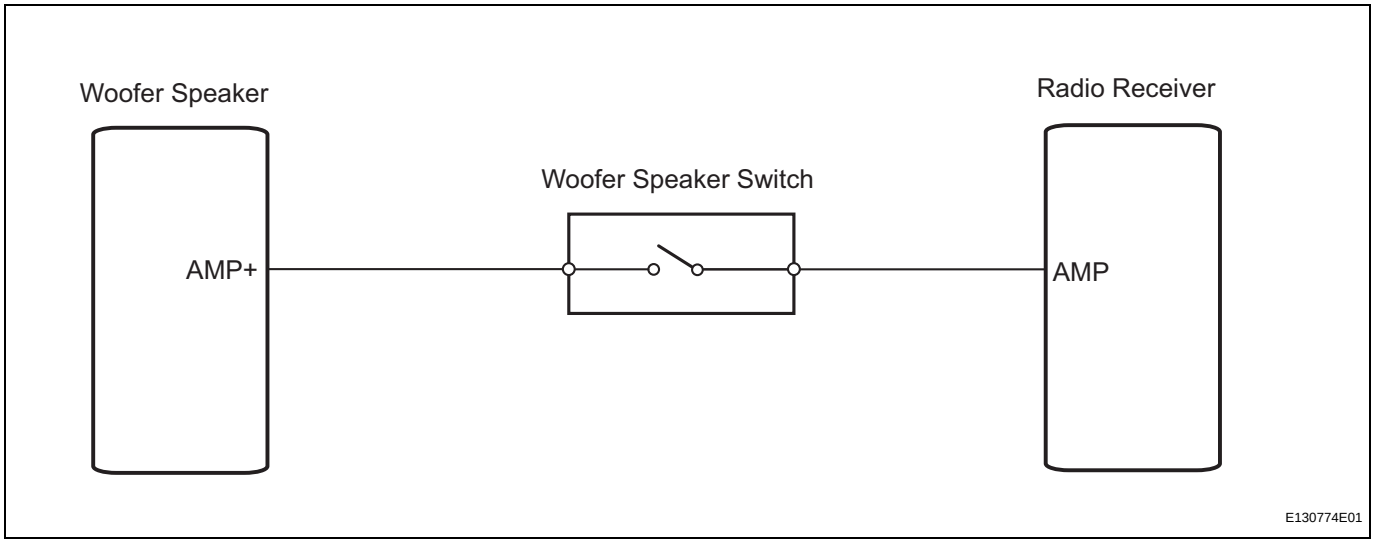

INSPECTION PROCEDURE

AV

1	INSPECT WOOFER SPEAKER SWITCH

(a) Check the woofer speaker switch (See page AV-127).
OK:
Woofer speaker switch is normal.

NG → **REPLACE WOOFER SPEAKER SWITCH**

OK

2	CHECK HARNESS AND CONNECTOR (RADIO RECEIVER - WOOFER SPEAKER SWITCH)

Wire Harness Side:

Woofer Speaker Switch Connector

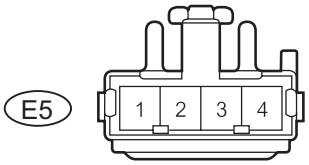

Front View

Radio Receiver Connector

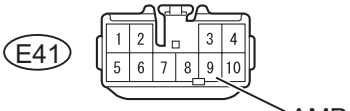

Front View

E130775E01

(a) Disconnect the E41 receiver connector.
(b) Disconnect the E5 woofer speaker switch connector.
(c) Measure the resistance.
Standard resistance

Tester Connection	Specified Condition
E41-9 (AMP) - E5-3	Below 1 Ω
E41-9 (AMP) or E5-3 - Body ground	10 kΩ or higher

(d) Reconnect the receiver connector.
(e) Reconnect the woofer speaker switch connector.

NG → **REPAIR OR REPLACE HARNESS OR CONNECTOR**

OK

AV

3	CHECK HARNESS AND CONNECTOR (WOOFER SPEAKER - WOOFER SPEAKER SWITCH)

Wire Harness Side:

Woofer Speaker Switch Connector

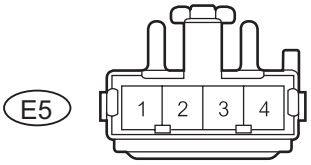

Front View

Woofer Speaker Connector

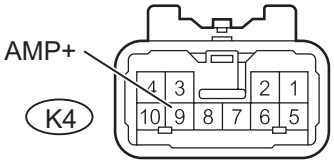

Front View

E130776E01

(a) Disconnect the K4 woofer speaker connector.
(b) Disconnect the E5 woofer speaker switch connector.
(c) Measure the resistance.
Standard resistance

Tester Connection	Specified Condition
K4-9 (AMP+) - E5-4	Below 1 Ω
K4-9 (AMP+) or E5-4 - Body ground	10 kΩ or higher

(d) Reconnect the woofer speaker connector.
(e) Reconnect the woofer speaker switch connector.

NG → **REPAIR OR REPLACE HARNESS OR CONNECTOR**

OK

PROCEED TO NEXT CIRCUIT INSPECTION SHOWN IN PROBLEM SYMPTOMS TABLE

Radio Receiver Power Source Circuit

DESCRIPTION

This circuit provides power to the radio receiver.

WIRING DIAGRAM

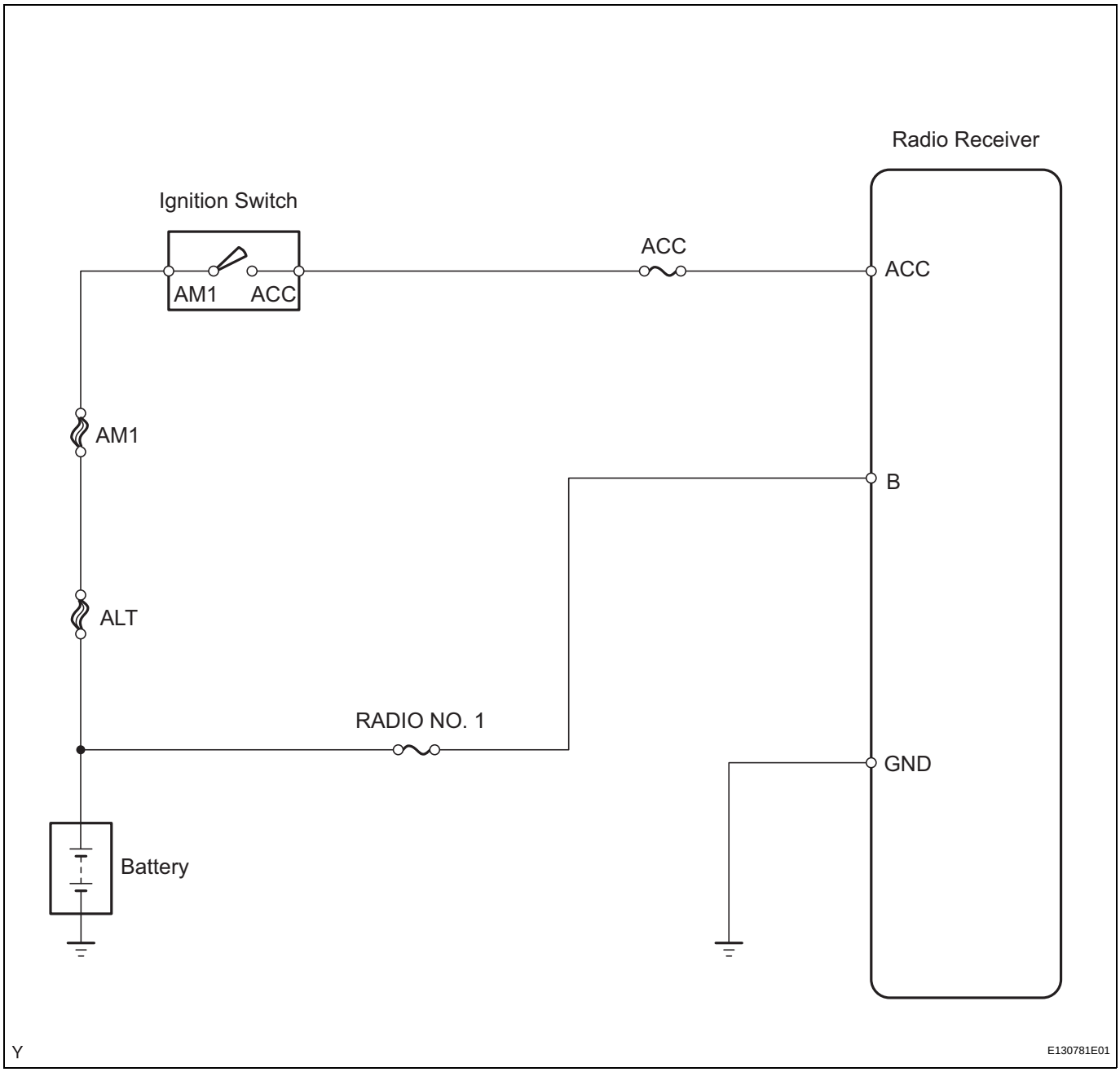

INSPECTION PROCEDURE

1	**INSPECT FUSE (ACC, AM1, RADIO NO. 1)**

(a) Remove the ACC fuse from the main body ECU.
(b) Remove the AM1 fuse and RADIO NO. 1 fuse from the engine room R/B.

(c) Measure the resistance of the fuses.
Standard resistance:
Below 1 Ω
(d) Reinstall the fuses.

NG → **REPLACE FUSE**

OK

2	CHECK HARNESS AND CONNECTOR (RADIO RECEIVER - BATTERY AND BODY GROUND)

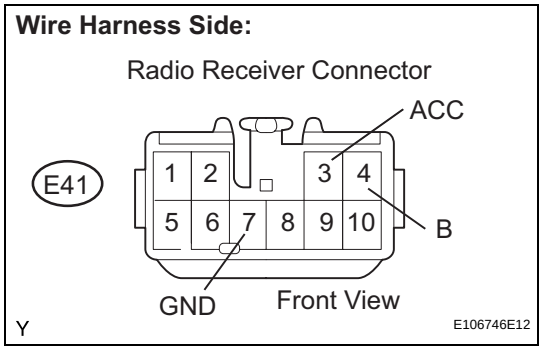

(a) Disconnect the E41 receiver connector.
(b) Measure the voltage.
Standard voltage

Tester Connection	Condition	Specified Condition
E41-4 (B) - Body ground	Always	11 to 14 V
E41-3 (ACC) - Body ground	Ignition switch ACC	11 to 14 V

(c) Measure the resistance.
Standard resistance

Tester Connection	Specified Condition
E41-7 (GND) - Body ground	Below 1 Ω

(d) Reconnect the receiver connector.

NG → **REPAIR OR REPLACE HARNESS OR CONNECTOR**

OK

PROCEED TO NEXT CIRCUIT INSPECTION SHOWN IN PROBLEM SYMPTOMS TABLE

AV

Woofer Speaker Power Source Circuit

DESCRIPTION

This circuit provides power to the woofer speaker.

WIRING DIAGRAM

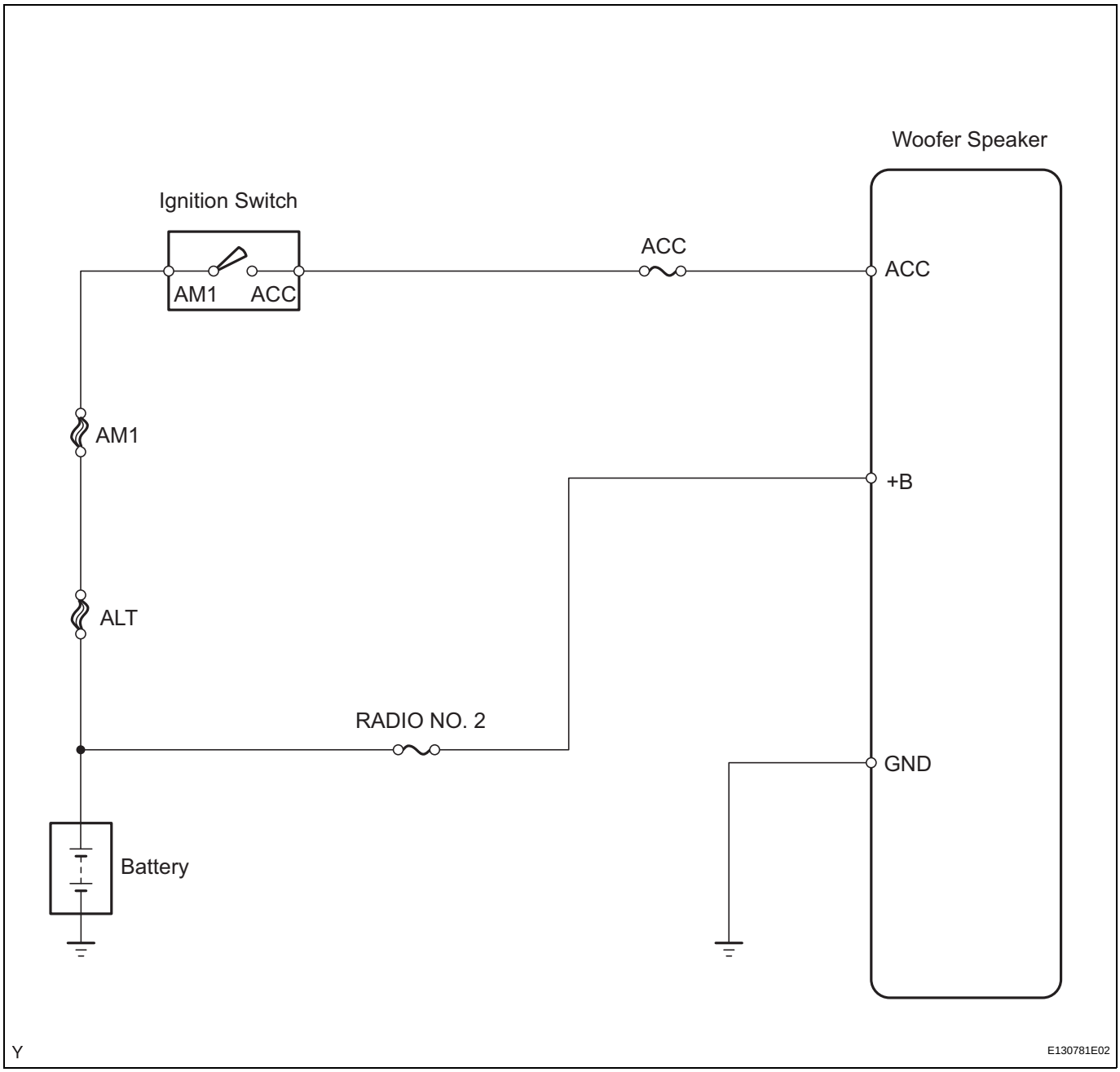

INSPECTION PROCEDURE

1	**INSPECT FUSE (ACC, AM1, RADIO NO. 2)**

(a) Remove the ACC fuse from the main body ECU.
(b) Remove the AM1 fuse and RADIO NO. 2 fuse from the engine room R/B.

(c) Measure the resistance of the fuses.
Standard resistance:
Below 1 Ω
(d) Reinstall the fuses.

NG → **REPLACE FUSE**

OK

2	CHECK HARNESS AND CONNECTOR (WOOFER SPEAKER - BATTERY AND BODY GROUND)

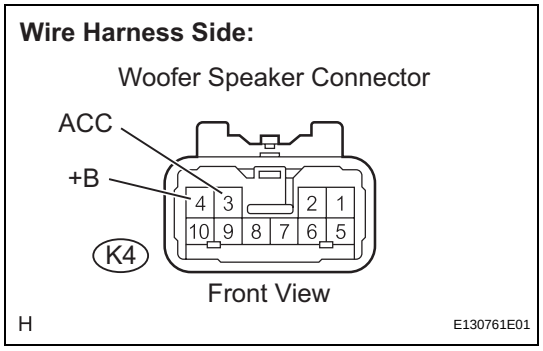

(a) Disconnect the K4 woofer speaker connector.
(b) Measure the voltage.
Standard voltage

Tester Connection	Condition	Specified Condition
K4-4 (+B) - Body ground	Always	11 to 14 V
K4-3 (ACC) - Body ground	Ignition switch ACC	11 to 14 V

(c) Measure the resistance.
Standard resistance

Tester Connection	Specified Condition
K4-7 (GND) - Body ground	Below 1 Ω

(d) Reconnect the woofer speaker connector.

NG → **REPAIR OR REPLACE HARNESS OR CONNECTOR**

OK

PROCEED TO NEXT CIRCUIT INSPECTION SHOWN IN PROBLEM SYMPTOMS TABLE

RADIO RECEIVER

COMPONENTS

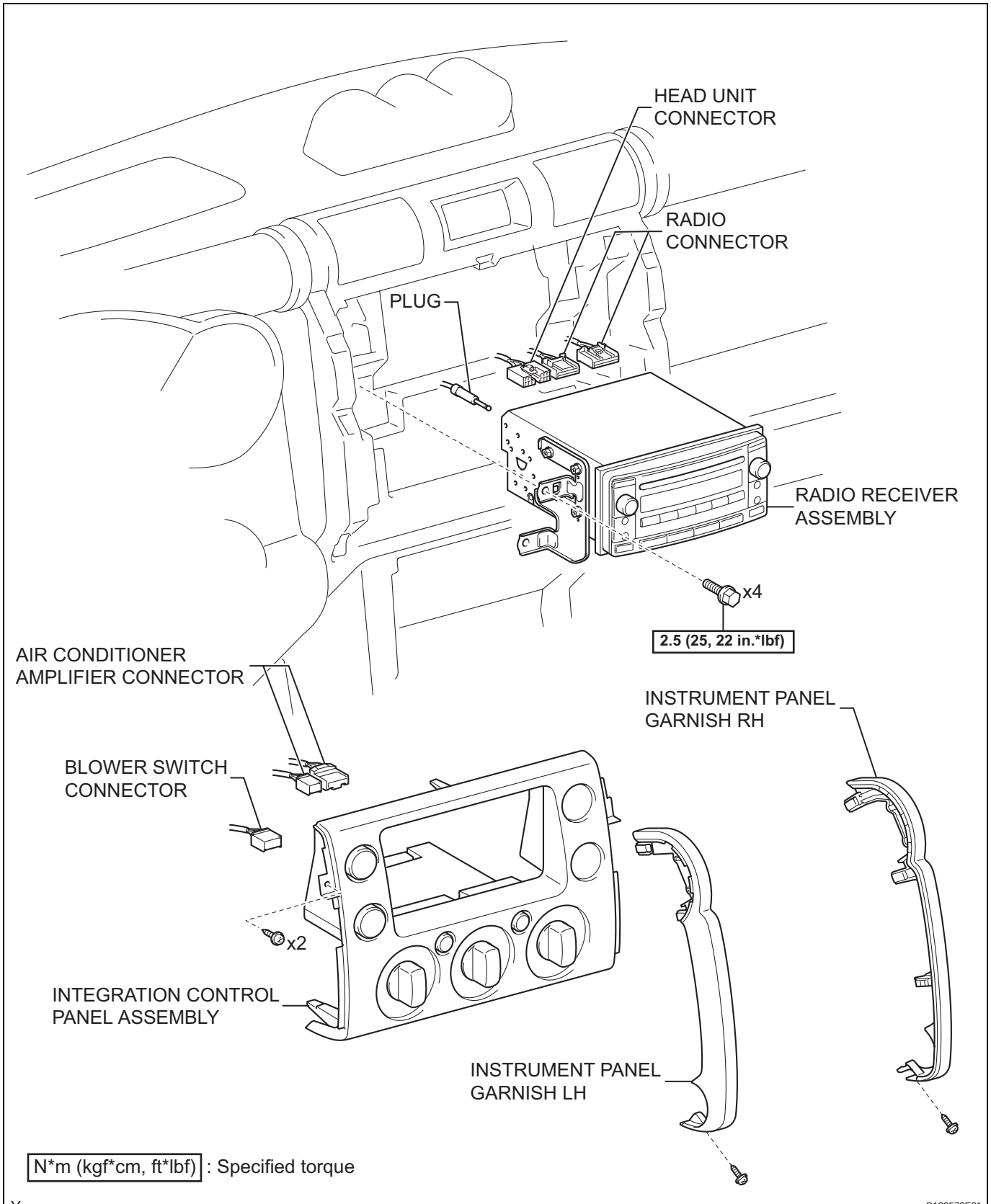

AV

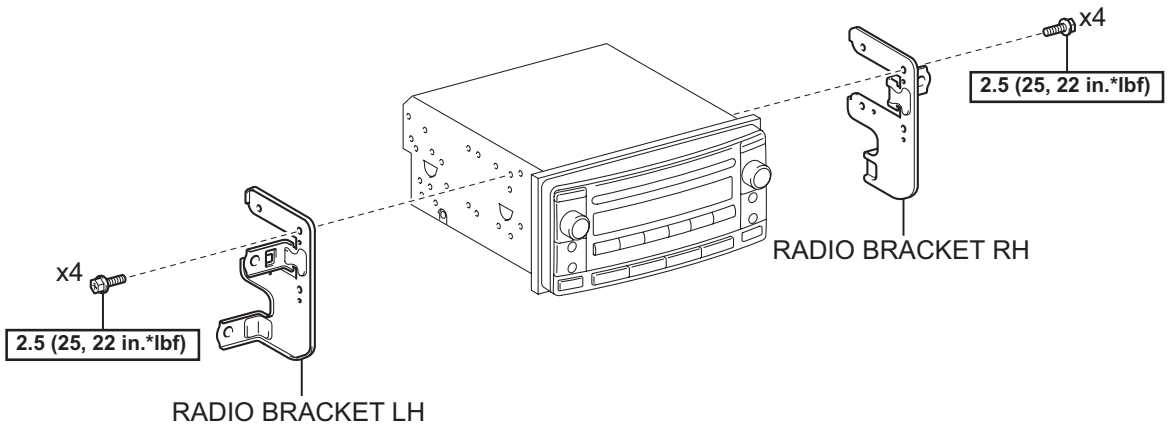

AV

N*m (kgf*cm, ft*lbf) : Specified torque

Y

B130574E01

REMOVAL

1. **DISCONNECT CABLE FROM NEGATIVE BATTERY TERMINAL**
2. **REMOVE INSTRUMENT PANEL GARNISH RH (See page IP-10)**
3. **REMOVE INSTRUMENT PANEL GARNISH LH (See page IR-18)**
4. **REMOVE INTEGRATION CONTROL PANEL ASSEMBLY (See page SB-2)**
5. **REMOVE RADIO RECEIVER ASSEMBLY**
   (a) Remove the 4 bolts and the radio receiver.

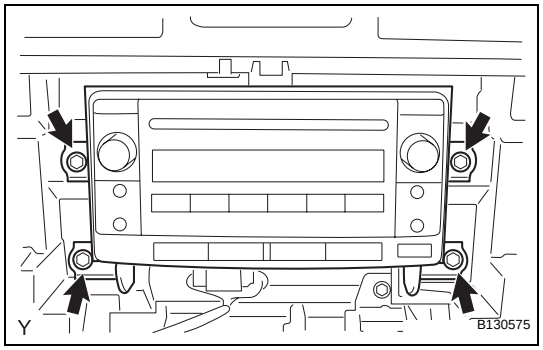

   (b) Disconnect the plug, the head unit connector and the 2 radio connectors.

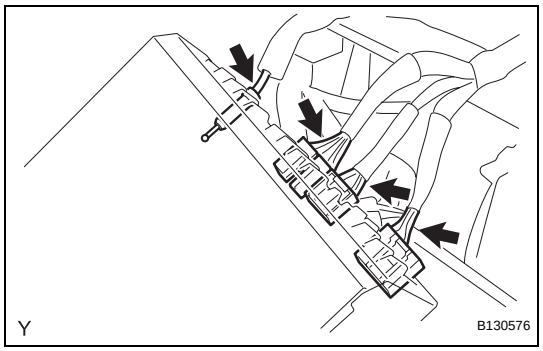

DISASSEMBLY

1. **REMOVE RADIO BRACKET RH**
   (a) Remove the 4 screws and the radio bracket.
2. **REMOVE RADIO BRACKET LH**
   HINT:
   Use the same procedure as for the RH side.

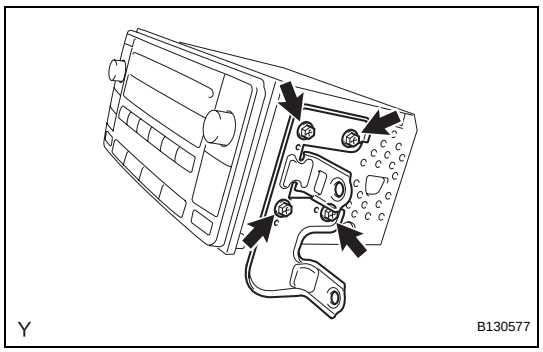

AV

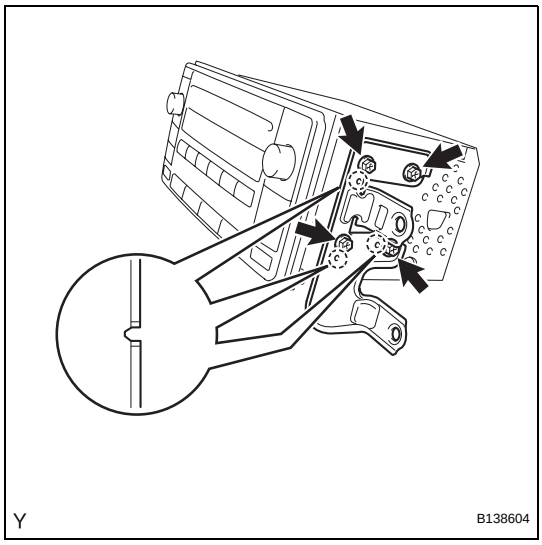

REASSEMBLY

1. **INSTALL RADIO BRACKET RH**
   (a) Align the 4 bosses of the radio bracket with the hole in the radio receiver and install the radio bracket with the 4 screws.
   Torque: 2.5 N*m (25 kgf*cm, 22 in.*lbf)
2. **INSTALL RADIO BRACKET LH**
   HINT:
   Use the same procedure as for the RH side.

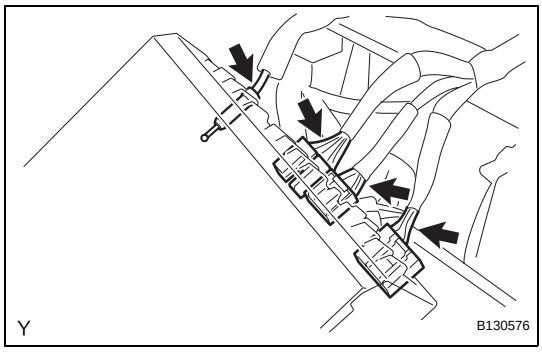

INSTALLATION

1. **INSTALL RADIO RECEIVER ASSEMBLY**
   (a) Connect the plug, the head unit connector and the 2 radio connectors.

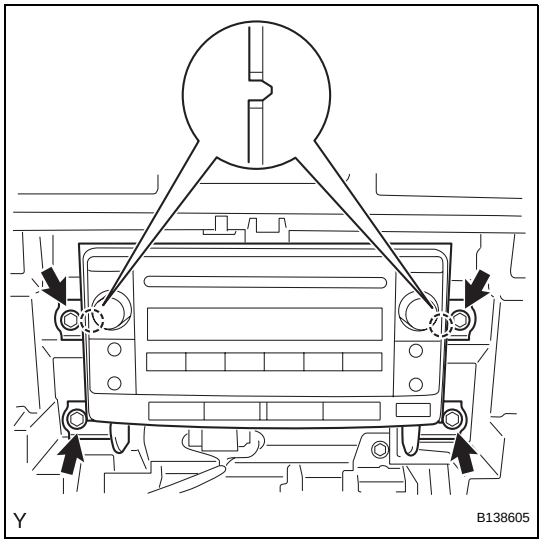

   (b) Align the 2 bosses of the radio bracket with the hole in the instrument panel and install the radio receiver with the 4 bolts.
   Torque: 2.5 N*m (25 kgf*cm, 22 in.*lbf)
2. **INSTALL INTEGRATION CONTROL PANEL ASSEMBLY (See page SB-3)**
3. **INSTALL INSTRUMENT PANEL GARNISH RH (See page IP-33)**
4. **INSTALL INSTRUMENT PANEL GARNISH LH (See page IP-33)**
5. **CONNECT CABLE TO NEGATIVE BATTERY TERMINAL**
   Torque: 3.9 N*m (40 kgf*cm, 35 in.*lbf)

AV

FRONT NO. 1 SPEAKER

COMPONENTS

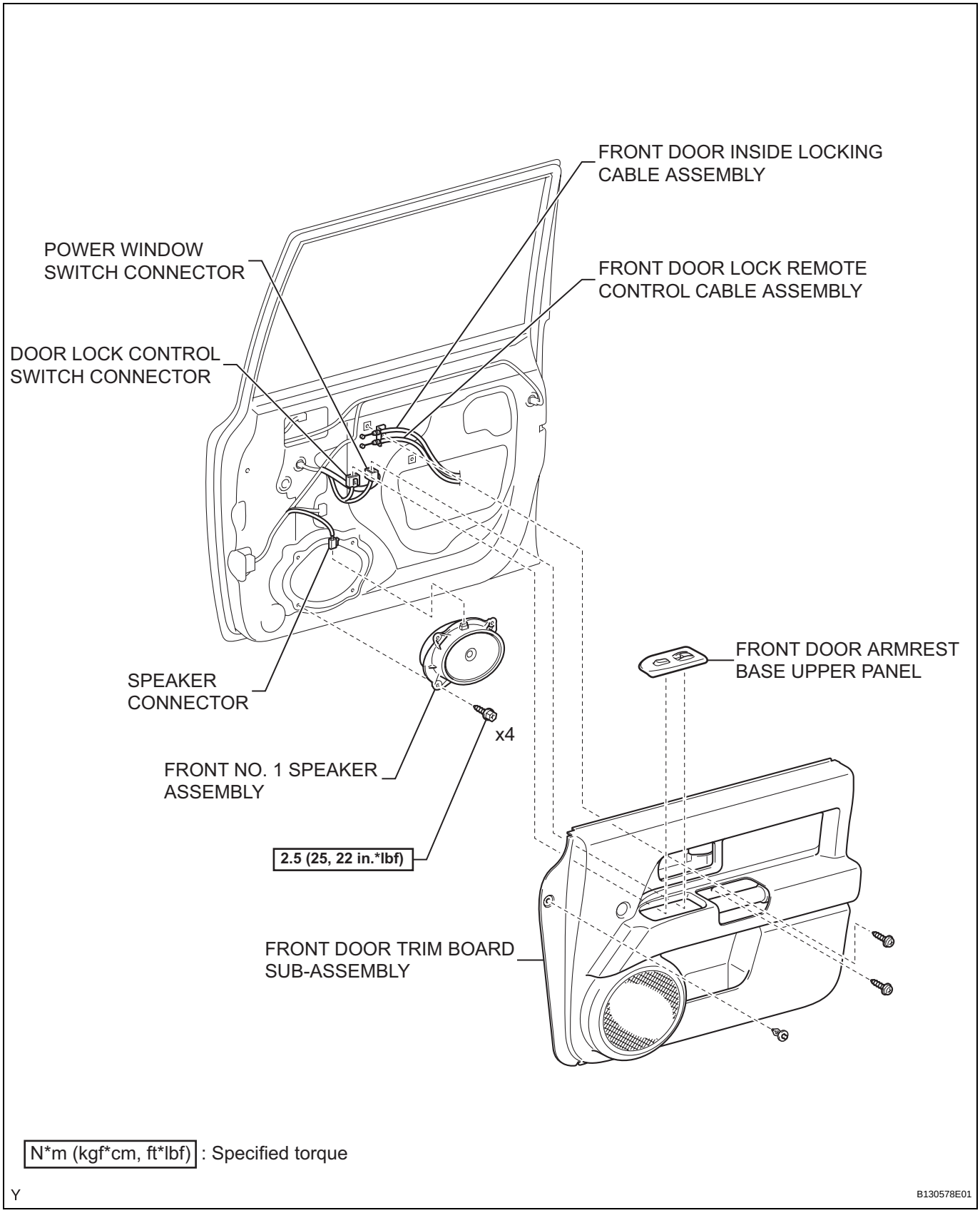

AV

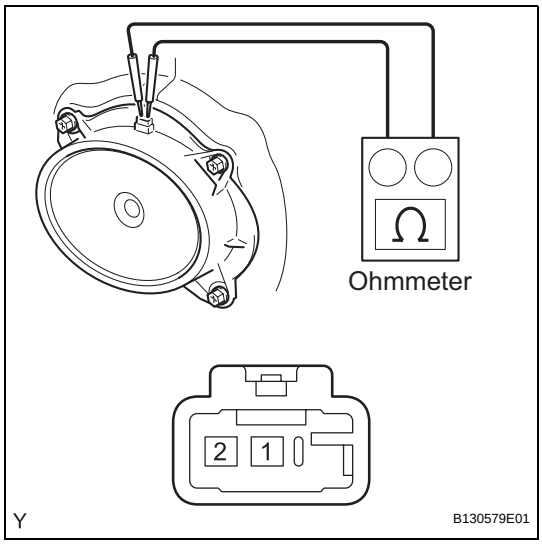

ON-VEHICLE INSPECTION

1. INSPECT FRONT NO. 1 SPEAKER ASSEMBLY

HINT:

Remove interior parts so that the front No. 1 speaker can be seen.

(a) Check the speaker installation.

OK:

The speaker is securely installed.

If the result is not as specified, reinstall the front No. 1 speaker.

(b) Visually check the speaker.

OK:

The cone paper of the speaker is not torn.

If the result is not as specified, replace the front No. 1 speaker.

(c) Check the resistance.

(1) Disconnect the speaker connector.

(2) Using an ohmmeter, measure the resistance between the terminals.

Standard resistance

Tester Connection	Specified Condition
1 - 2	Approximately 4 Ω

If the result is not as specified, replace the front No. 1 speaker.

REMOVAL

HINT:
The procedure described below is for the RH side. Use the same procedure for both the RH and LH sides, unless otherwise specified.

1. **DISCONNECT CABLE FROM NEGATIVE BATTERY TERMINAL**
2. **REMOVE FRONT DOOR ARMREST BASE UPPER PANEL (See page ED-9)**
3. **REMOVE FRONT DOOR TRIM BOARD SUB-ASSEMBLY (See page ED-9)**
4. **REMOVE FRONT NO. 1 SPEAKER ASSEMBLY**
   (a) Disconnect the speaker connector.

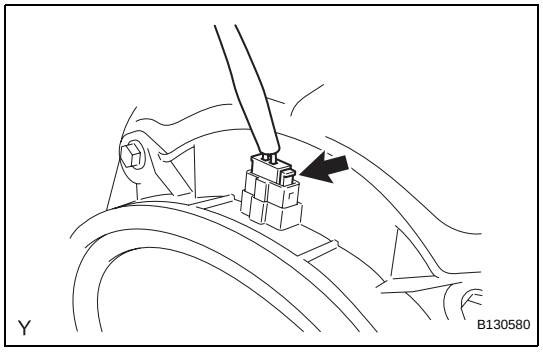

(b) Remove the 4 screws and the front No. 1 speaker.

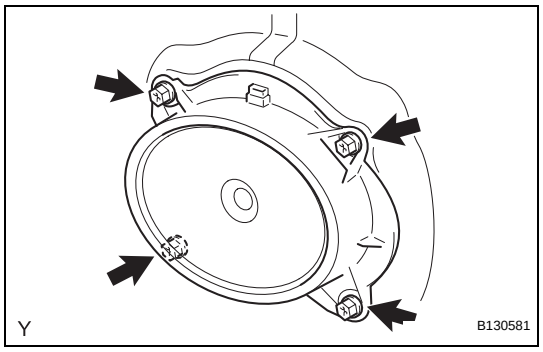

AV

INSTALLATION

HINT:
The procedure described below is for the RH side. Use the same procedure for both the RH and LH sides, unless otherwise specified.

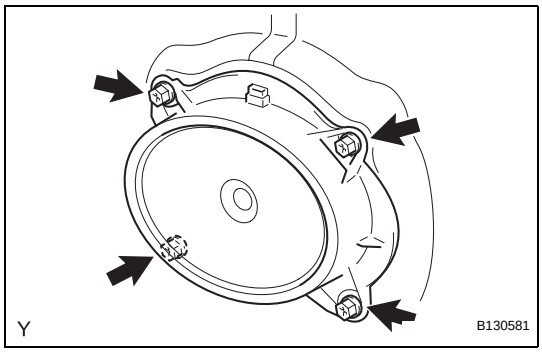

1. INSTALL FRONT NO. 1 SPEAKER ASSEMBLY

(a) Install the front No. 1 speaker with the 4 screws.
Torque: 2.5 N*m (25 kgf*cm, 22 in.*lbf)

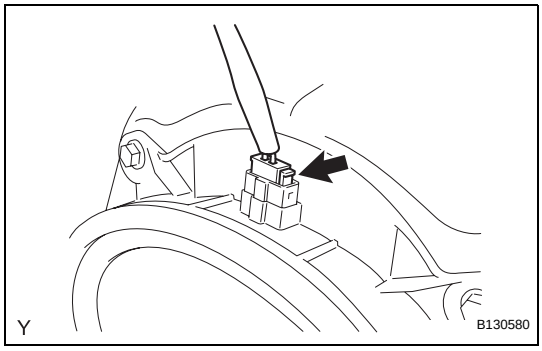

(b) Connect the speaker connector.

2. INSTALL FRONT DOOR TRIM BOARD SUB-ASSEMBLY (See page ED-24)

3. INSTALL FRONT DOOR ARMREST BASE UPPER PANEL (See page ED-25)

4. CONNECT CABLE TO NEGATIVE BATTERY TERMINAL
Torque: 3.9 N*m (40 kgf*cm, 35 in.*lbf)

FRONT NO. 2 SPEAKER

COMPONENTS

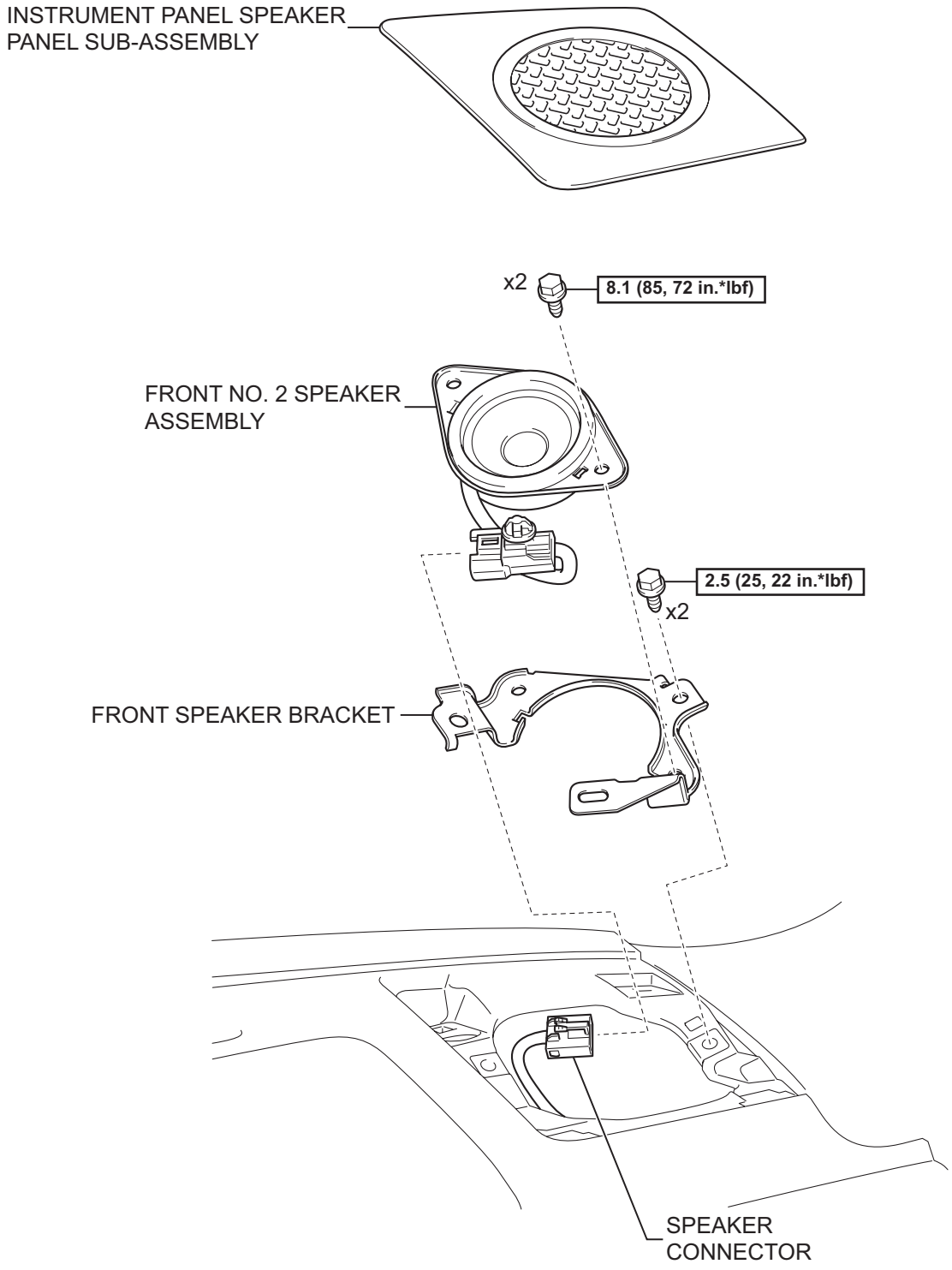

N*m (kgf*cm, ft*lbf) : Specified torque

Y

B135135E01

AV

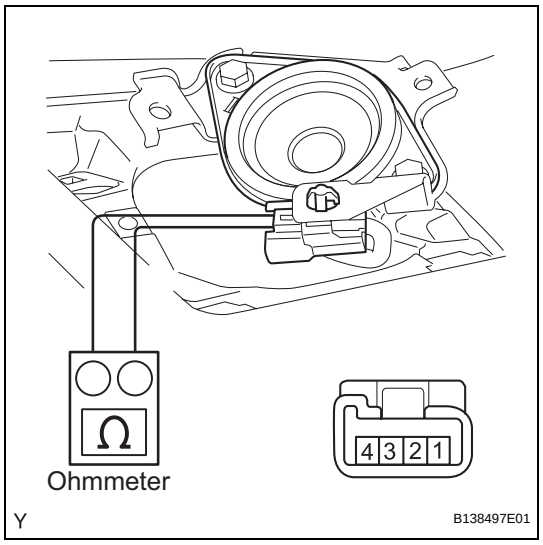

ON-VEHICLE INSPECTION

1. INSPECT FRONT NO. 2 SPEAKER ASSEMBLY

HINT:

Remove interior parts so that the front No. 2 speaker can be seen.

(a) Check the speaker installation.

OK:

The speaker is securely installed.

If the result is not as specified, reinstall the front No. 2 speaker.

(b) Visually check the speaker.

OK:

The cone paper of the speaker is not torn.

If the result is not as specified, replace the front No. 2 speaker.

(c) Check the resistance.

(1) Disconnect the speaker connector.

(2) Using an ohmmeter, measure the resistance between the terminals.

Standard resistance

Tester Connection	Specified Condition
3 - 4	Approximately 8 Ω

If the result is not as specified, replace the front No. 2 speaker.

REMOVAL

HINT:
The procedure described below is for the RH side. Use the same procedure for both the RH and LH sides, unless otherwise specified.

1. **DISCONNECT CABLE FROM NEGATIVE BATTERY TERMINAL**

2. **REMOVE INSTRUMENT PANEL SPEAKER PANEL SUB-ASSEMBLY (See page IP-16)**

3. **REMOVE FRONT SPEAKER BRACKET**
   (a) Remove the 2 bolts and the front speaker bracket.
   (b) Disconnect the speaker connector.

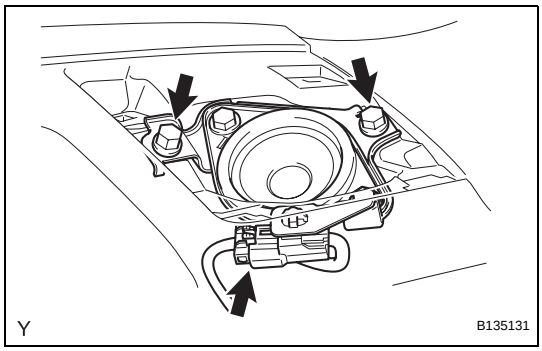

4. **REMOVE FRONT NO. 2 SPEAKER ASSEMBLY**
   (a) Remove the clamp.
   (b) Remove the 2 bolts and the front No. 2 speaker.

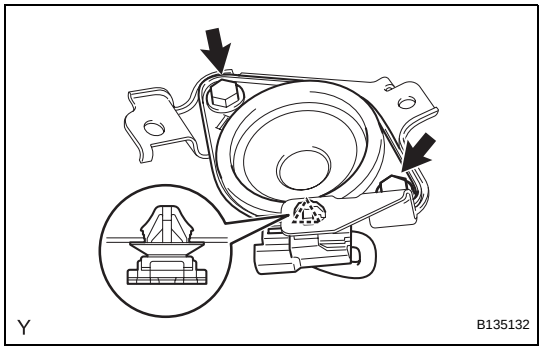

INSTALLATION

HINT:
The procedure described below is for the RH side. Use the same procedure for both the RH and LH sides, unless otherwise specified.

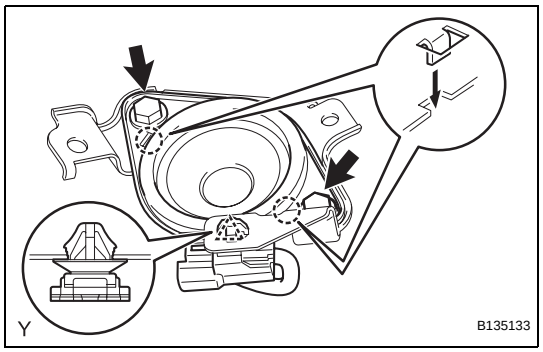

1. INSTALL FRONT NO. 2 SPEAKER ASSEMBLY
(a) Install the clamp.
(b) Insert the 2 hooks into the 2 cutout of the front speaker bracket and install the front No. 2 speaker with the 2 bolts.
Torque: 8.1 N*m (85 kgf*cm, 72 in.*lbf)

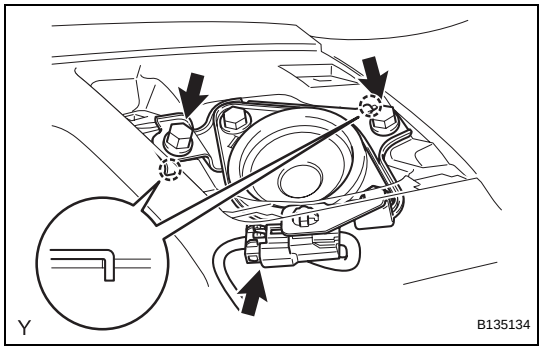

2. INSTALL FRONT SPEAKER BRACKET
(a) Connect the speaker connector.
(b) Insert the 2 hooks into the 2 instrument panel holes and install the front speaker bracket with the 2 bolts.
Torque: 2.5 N*m (25 kgf*cm, 22 in.*lbf)

3. INSTALL INSTRUMENT PANEL SPEAKER PANEL SUB-ASSEMBLY (See page IP-27)

4. CONNECT CABLE TO NEGATIVE BATTERY TERMINAL
Torque: 3.9 N*m (40 kgf*cm, 35 in.*lbf)

REAR SPEAKER

COMPONENTS

for RH Side:

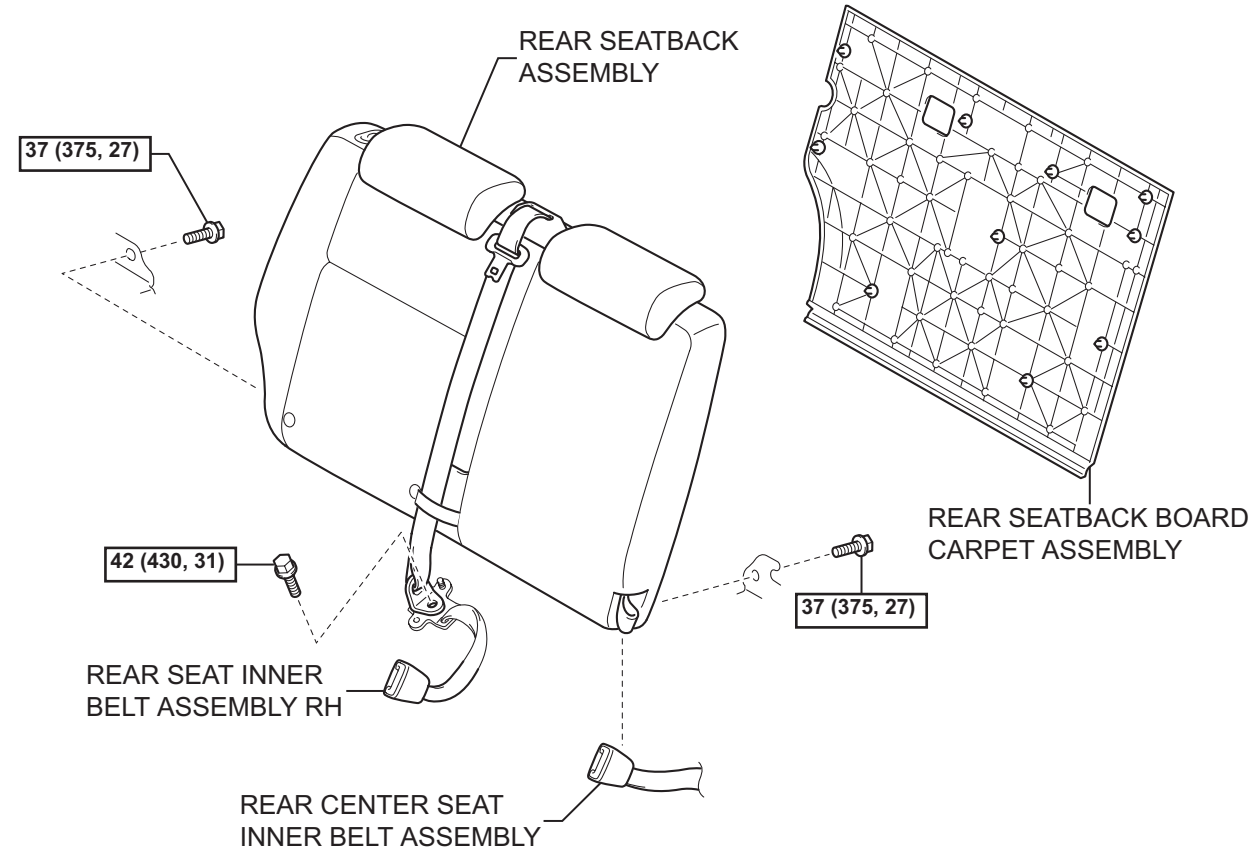

for LH Side:

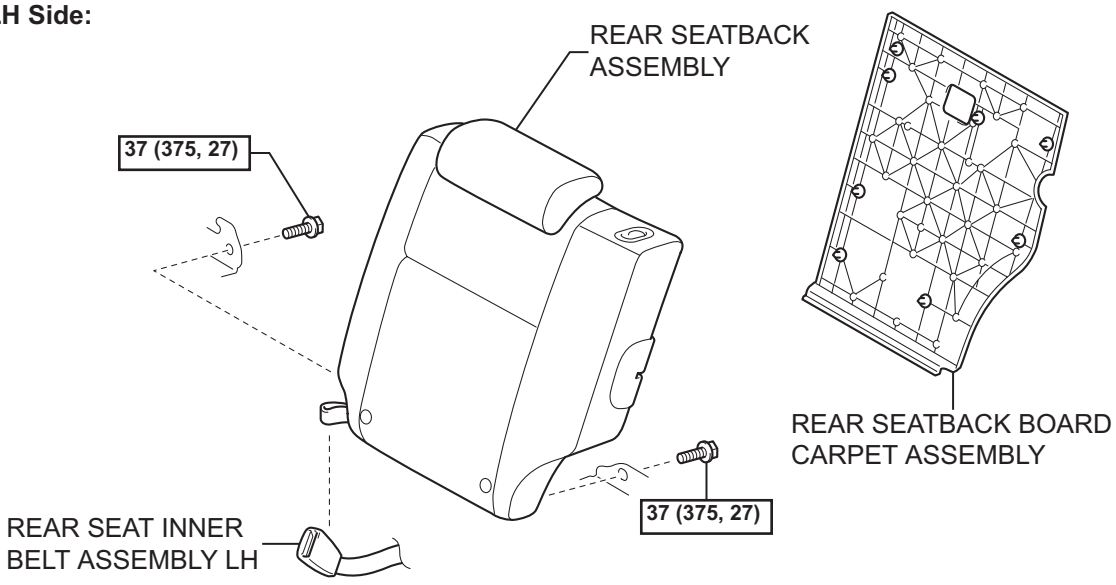

N*m (kgf*cm, ft*lbf) : Specified torque

Y

B130654E02

AV

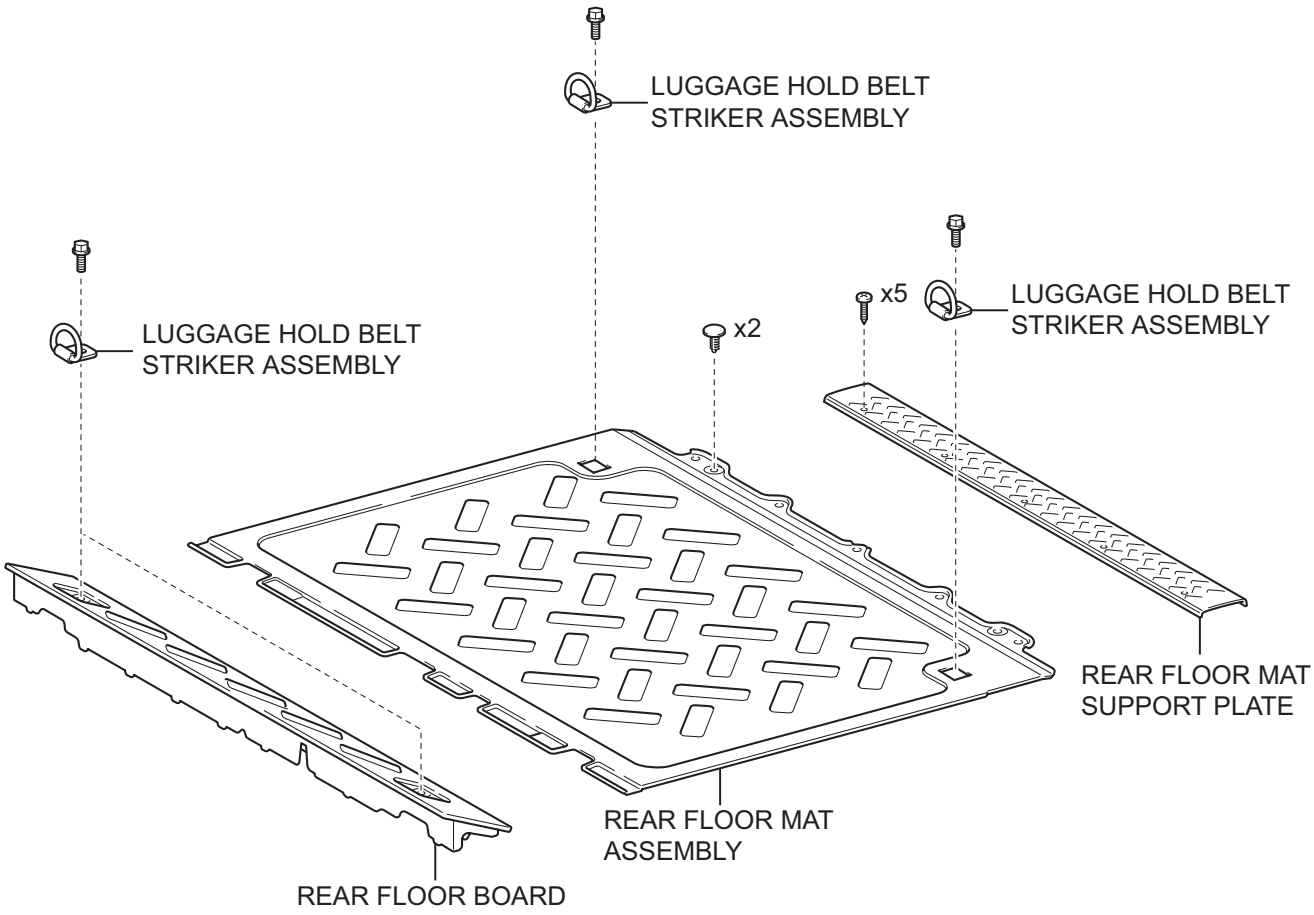

Y

B130655E01

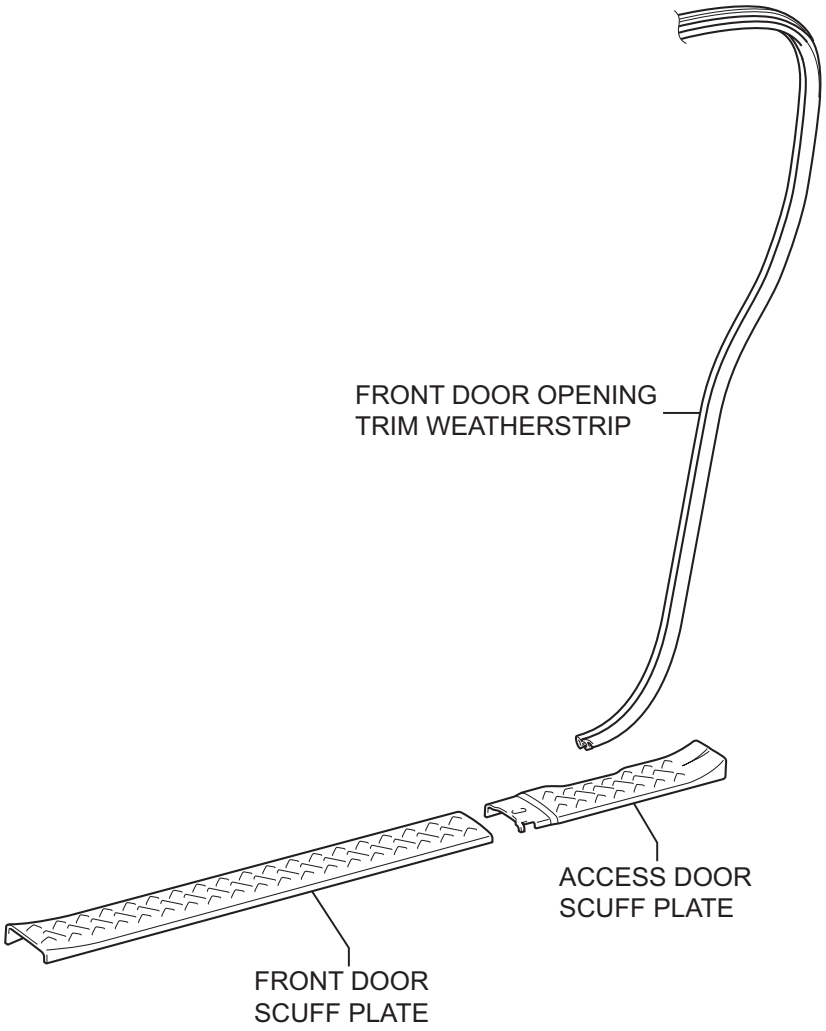

Y

B138381E01

for RH Side:

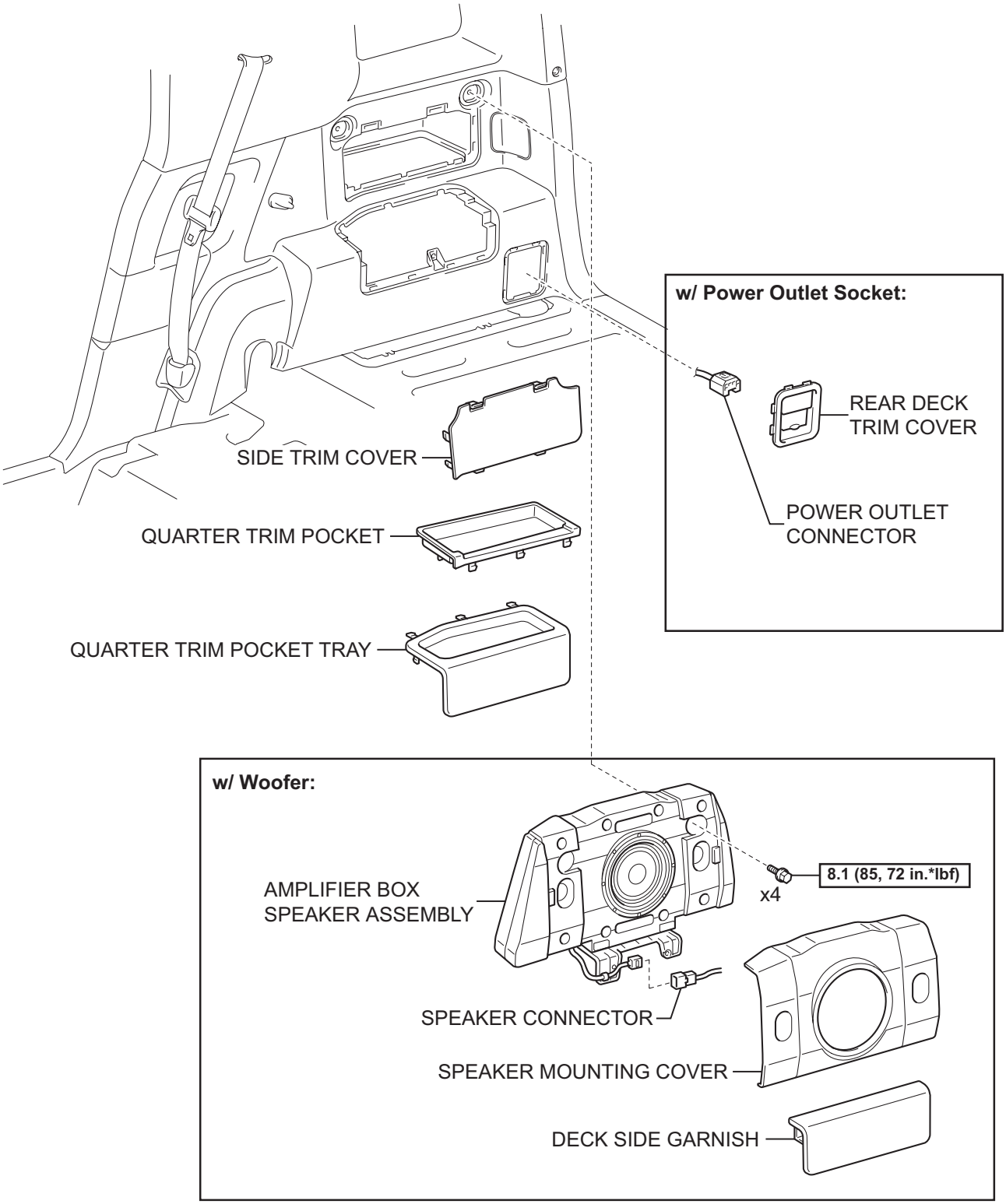

AV

N*m (kgf*cm, ft*lbf) : Specified torque

Y

B138473E01

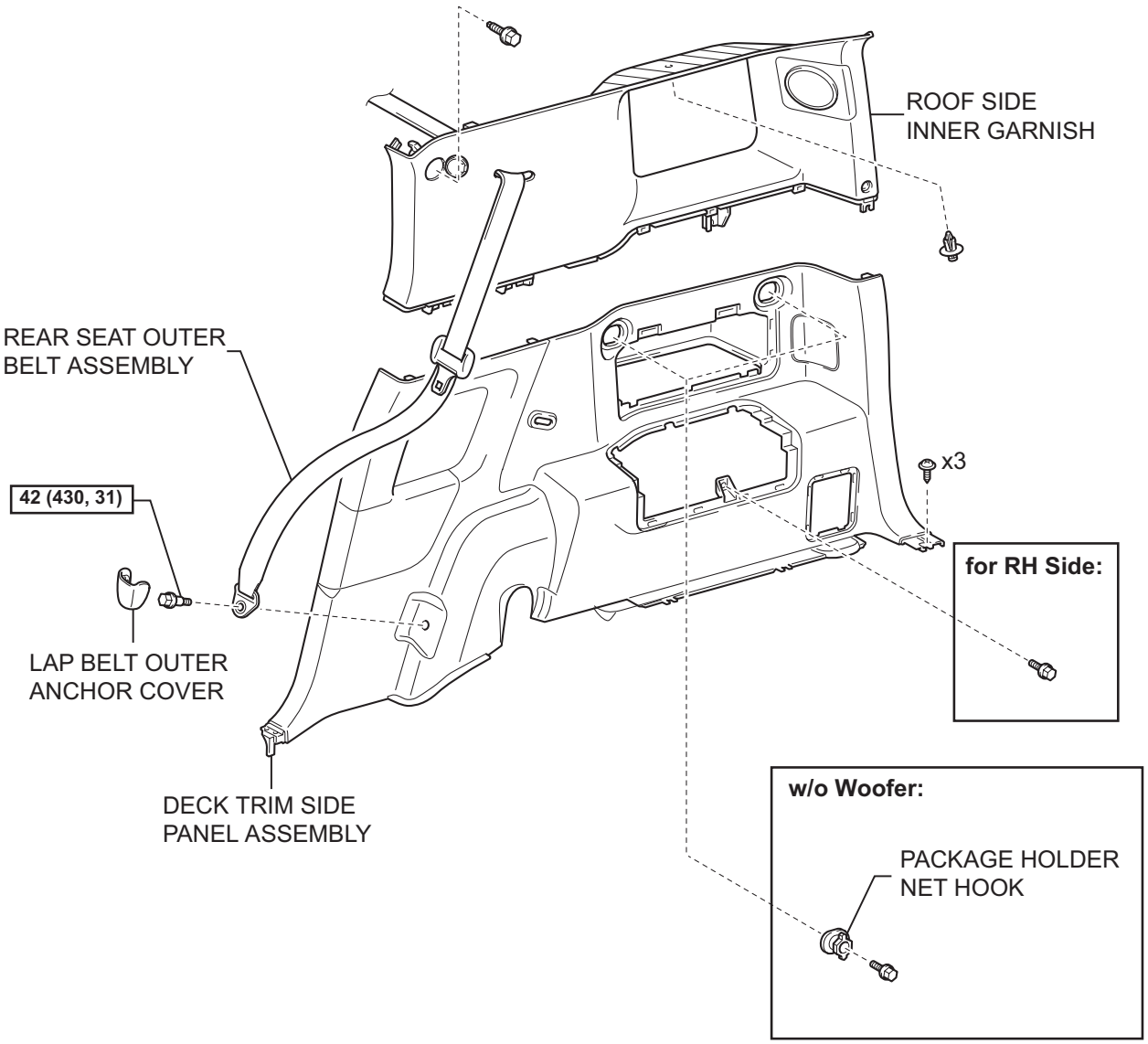

AV

N*m (kgf*cm, ft.*lbf) : Specified torque

Y

B138496E01

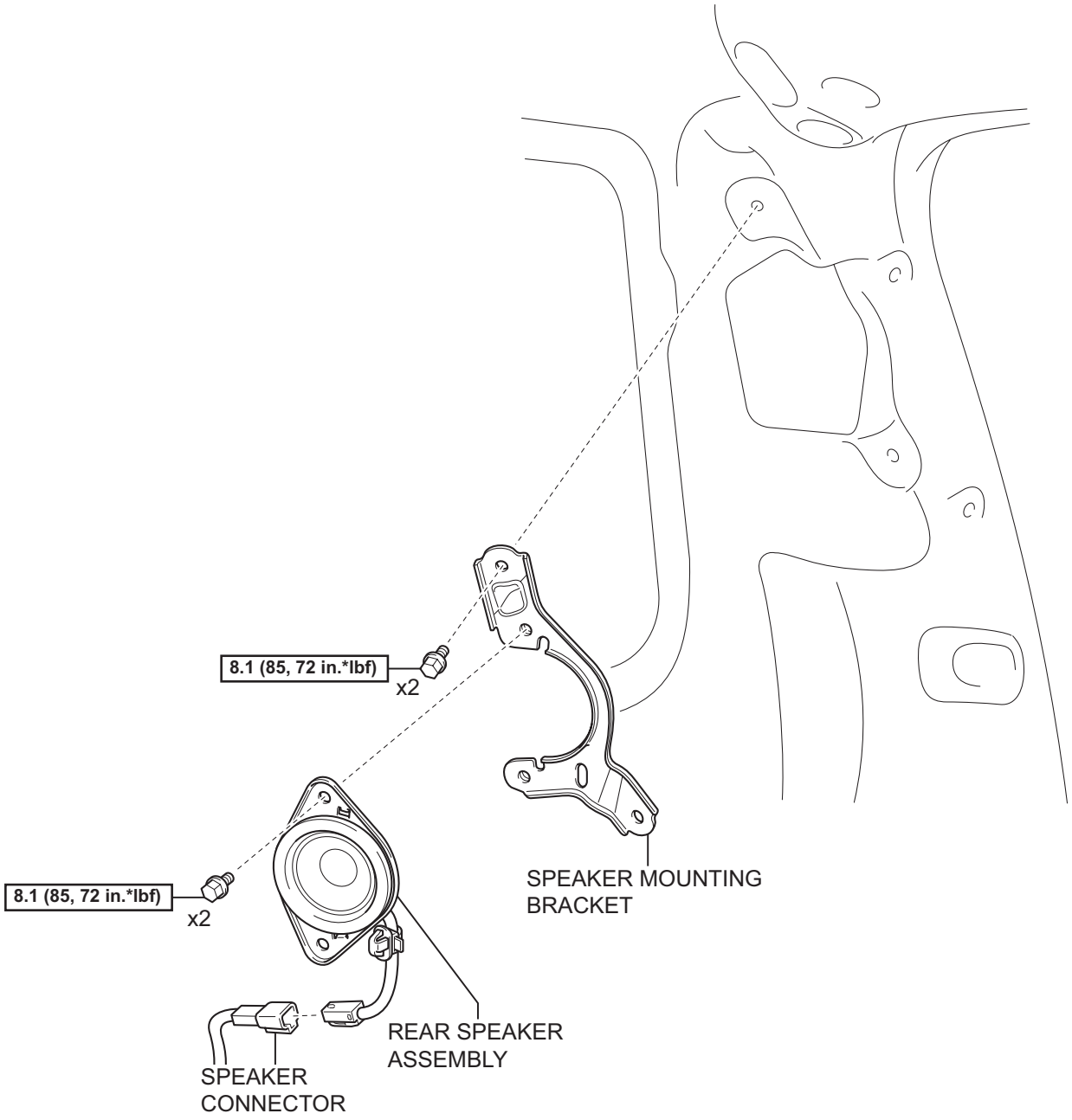

N*m (kgf*cm, ft.*lbf) : Specified torque

Y

B135123E01

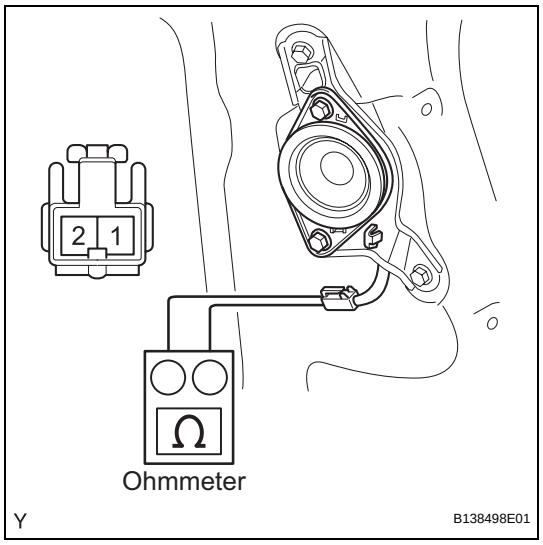

ON-VEHICLE INSPECTION

1. INSPECT REAR SPEAKER ASSEMBLY

HINT:

Remove interior parts so that the rear speaker can be seen.

(a) Check the speaker installation.

OK:

The speaker is securely installed.

If the result is not as specified, reinstall the rear speaker.

(b) Visually check the speaker.

OK:

The cone paper of the speaker is not torn.

If the result is not as specified, replace the rear speaker.

(c) Check the resistance.

(1) Disconnect the speaker connector.

(2) Using an ohmmeter, measure the resistance between the terminals.

Standard resistance

Tester Connection	Specified Condition
1 - 2	Approximately 8 Ω

If the result is not as specified, replace the rear speaker.

REMOVAL

HINT:
The procedure described below is for the RH side. Use the same procedure for both the RH and LH sides, unless otherwise specified.

1. **DISCONNECT CABLE FROM NEGATIVE BATTERY TERMINAL**
2. **REMOVE REAR SEATBACK BOARD CARPET ASSEMBLY**
   (a) for RH Side:
      (1) Remove the rear seatback board carpet assembly (See page SE-43).
   (b) for LH Side:
      (1) Remove the rear seatback board carpet assembly (See page SE-29).
3. **REMOVE REAR SEATBACK ASSEMBLY**
   (a) for RH Side:
      (1) Remove the rear seatback assembly (See page SE-43).
   (b) for LH Side:
      (1) Remove the rear seatback assembly (See page SE-29).
4. **REMOVE REAR FLOOR BOARD (See page IR-13)**
5. **REMOVE REAR FLOOR MAT SUPPORT PLATE (See page IR-14)**
6. **REMOVE LUGGAGE HOLD BELT STRIKER ASSEMBLY (See page IR-14)**
7. **REMOVE REAR FLOOR MAT ASSEMBLY (See page IR-15)**
8. **REMOVE FRONT DOOR SCUFF PLATE (See page IR-15)**
9. **REMOVE ACCESS DOOR SCUFF PLATE (See page IR-15)**
10. **REMOVE FRONT DOOR OPENING TRIM WEATHERSTRIP (See page SB-56)**
11. **REMOVE DECK SIDE GARNISH (w/ Woofer) (See page IR-18)**
12. **REMOVE SPEAKER MOUNTING COVER (w/ Woofer) (See page AV-90)**
13. **REMOVE AMPLIFIER BOX SPEAKER ASSEMBLY (w/ Woofer) (See page AV-90)**
14. **REMOVE PACKAGE HOLDER NET HOOK (w/o Woofer) (See page SB-57)**
15. **REMOVE QUARTER TRIM POCKET TRAY (w/o Woofer) (See page IR-19)**

16. **REMOVE SIDE TRIM COVER (w/o Woofer) (See page IR-19)**

17. **REMOVE QUARTER TRIM POCKET (w/o Woofer) (See page IR-19)**

18. **REMOVE LAP BELT OUTER ANCHOR COVER (See page SB-57)**

19. **REMOVE REAR SEAT OUTER BELT ASSEMBLY (See page IR-20)**

20. **REMOVE REAR DECK TRIM COVER (w/ Power Outlet Socket) (See page IR-20)**

21. **REMOVE DECK TRIM SIDE PANEL ASSEMBLY**
    (a) for RH Side:
        (1) Remove the deck trim side panel assembly (See page IR-21).
    (b) for LH Side:
        (1) Remove the deck trim side panel assembly (See page IR-21).

22. **REMOVE ROOF SIDE INNER GARNISH (See page IR-22)**

23. **REMOVE SPEAKER MOUNTING BRACKET**
    (a) Disconnect the speaker connector.
    (b) Remove the 2 bolts and the speaker mounting bracket.

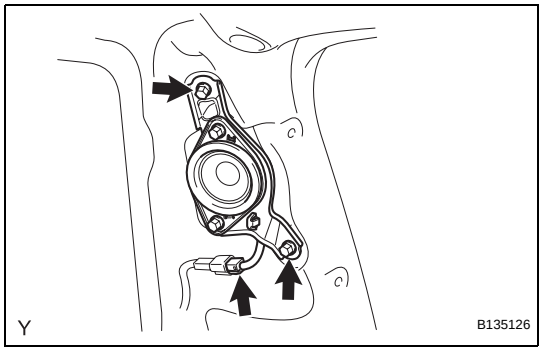

24. **REMOVE REAR SPEAKER ASSEMBLY**
    (a) Remove the clamp, the 2 bolts and the rear speaker.

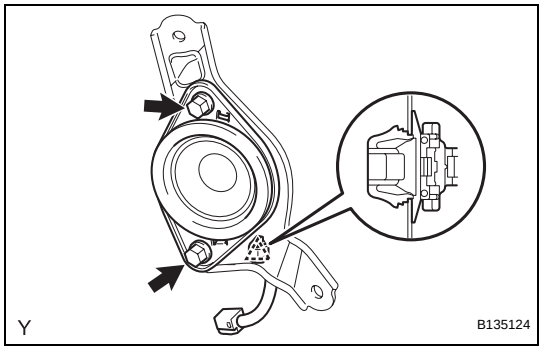

AV

INSTALLATION

HINT:
The procedure described below is for the RH side. Use the same procedure for both the RH and LH sides, unless otherwise specified.

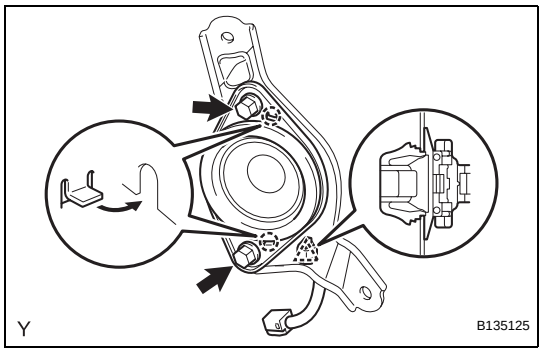

1. **INSTALL REAR SPEAKER ASSEMBLY**
   (a) Inert the 2 hooks into the 2 cutouts of the speaker mounting bracket and install the rear speaker with the 2 bolts.
   Torque: 8.1 N*m (85 kgf*cm, 72 in.*lbf)
   (b) Install the clamp.

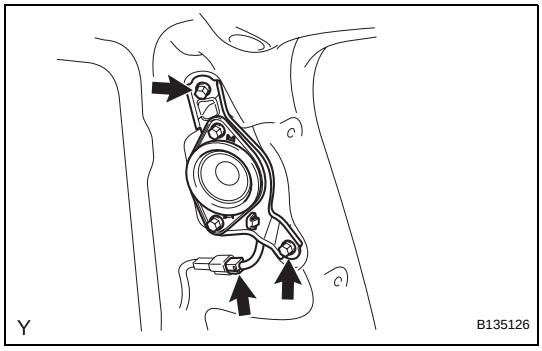

2. **INSTALL SPEAKER MOUNTING BRACKET**
   (a) Install the speaker mounting bracket with the 2 bolts.
   Torque: 8.1 N*m (85 kgf*cm, 72 in.*lbf)
   (b) Connect the speaker connector.
3. **INSTALL ROOF SIDE INNER GARNISH (See page IR-38)**
4. **INSTALL DECK TRIM SIDE PANEL ASSEMBLY**
   (a) for RH Side:
      (1) Install the deck trim side panel assembly (See page IR-39).
   (b) for LH Side:
      (1) Install the deck trim side panel assembly (See page IR-39).
5. **INSTALL REAR DECK TRIM COVER (w/ Power Outlet Socket) (See page IR-40)**
6. **INSTALL REAR SEAT OUTER BELT ASSEMBLY (See page IR-40)**
7. **INSTALL LAP BELT OUTER ANCHOR COVER (See page SB-61)**
8. **INSTALL AMPLIFIER BOX SPEAKER ASSEMBLY (w/ Woofer) (See page AV-90)**
9. **INSTALL SPEAKER MOUNTING COVER (w/ Woofer) (See page AV-91)**
10. **INSTALL DECK SIDE GARNISH (w/ Woofer) (See page IR-41)**
11. **INSTALL QUARTER TRIM POCKET (w/o Woofer) (See page IR-41)**
12. **INSTALL SIDE TRIM COVER (w/o Woofer) (See page IR-42)**
13. **INSTALL QUARTER TRIM POCKET TRAY (w/o Woofer) (See page IR-41)**

14. **INSTALL PACKAGE HOLDER NET HOOK (w/o Woofer) (See page SB-62)**

15. **INSTALL FRONT DOOR OPENING TRIM WEATHERSTRIP (See page SB-62)**

16. **INSTALL ACCESS DOOR SCUFF PLATE (See page IR-45)**

17. **INSTALL FRONT DOOR SCUFF PLATE (See page IR-45)**

18. **INSTALL REAR FLOOR MAT ASSEMBLY (See page IR-46)**

19. **INSTALL LUGGAGE HOLD BELT STRIKER ASSEMBLY (See page IR-46)**

20. **INSTALL REAR FLOOR MAT SUPPORT PLATE (See page IR-46)**

21. **INSTALL REAR FLOOR BOARD (See page IR-47)**

22. **INSTALL REAR SEATBACK ASSEMBLY**
    (a) for RH Side:
        (1) Install the rear seatback assembly (See page SE-54).
    (b) for LH Side:
        (1) Install the rear seatback assembly (See page SE-38).

23. **INSTALL REAR SEATBACK BOARD CARPET ASSEMBLY**
    (a) for RH Side:
        (1) Install the rear seatback board carpet assembly (See page SE-54).
    (b) for LH Side:
        (1) Install the rear seatback board carpet assembly (See page SE-38).

24. **CONNECT CABLE TO NEGATIVE BATTERY TERMINAL**
    Torque: 3.9 N*m (40 kgf*cm, 35 in.*lbf)

ROOF SPEAKER

COMPONENTS

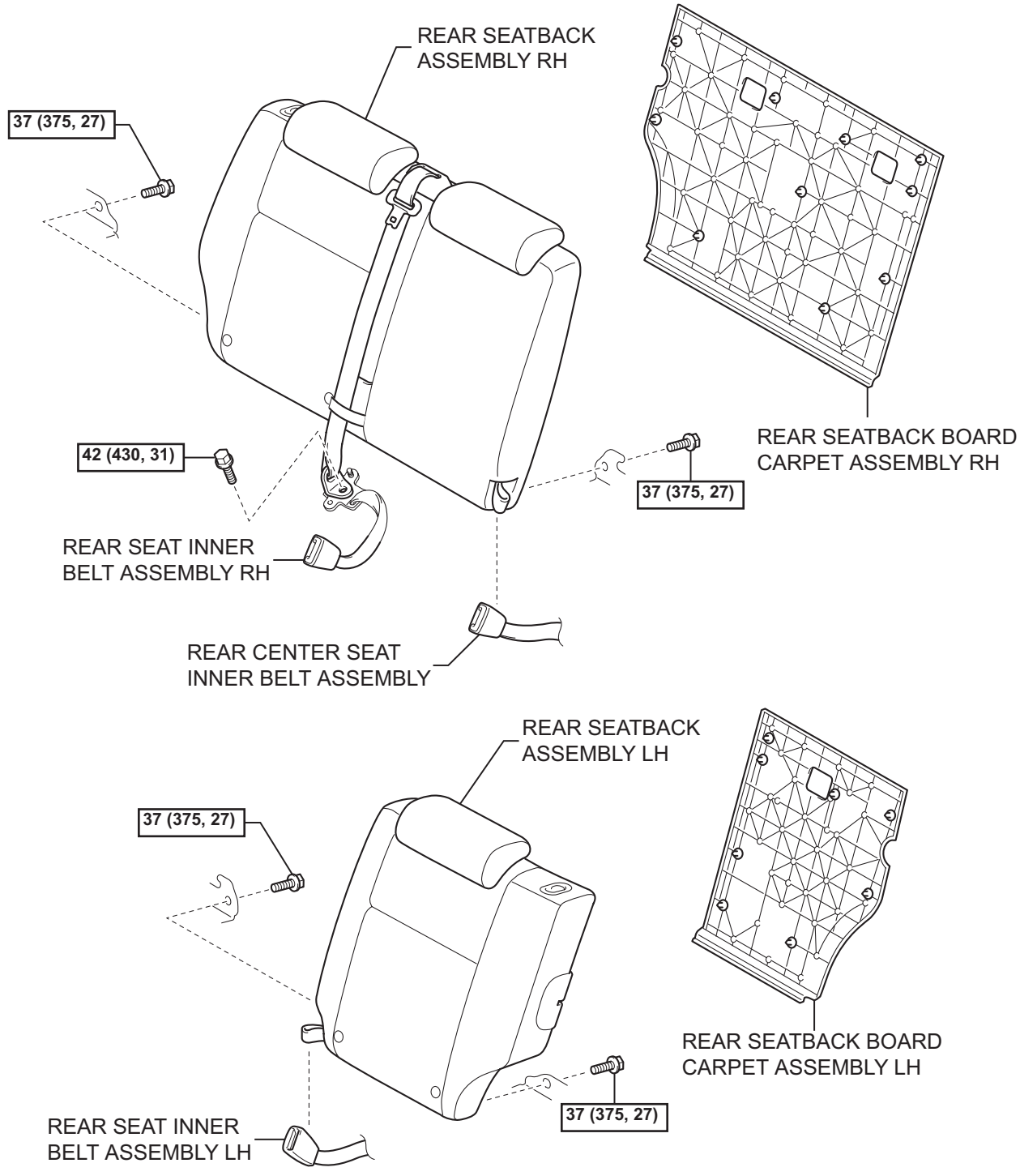

N*m (kgf*cm, ft*lbf) : Specified torque

Y

B130654E01

AV

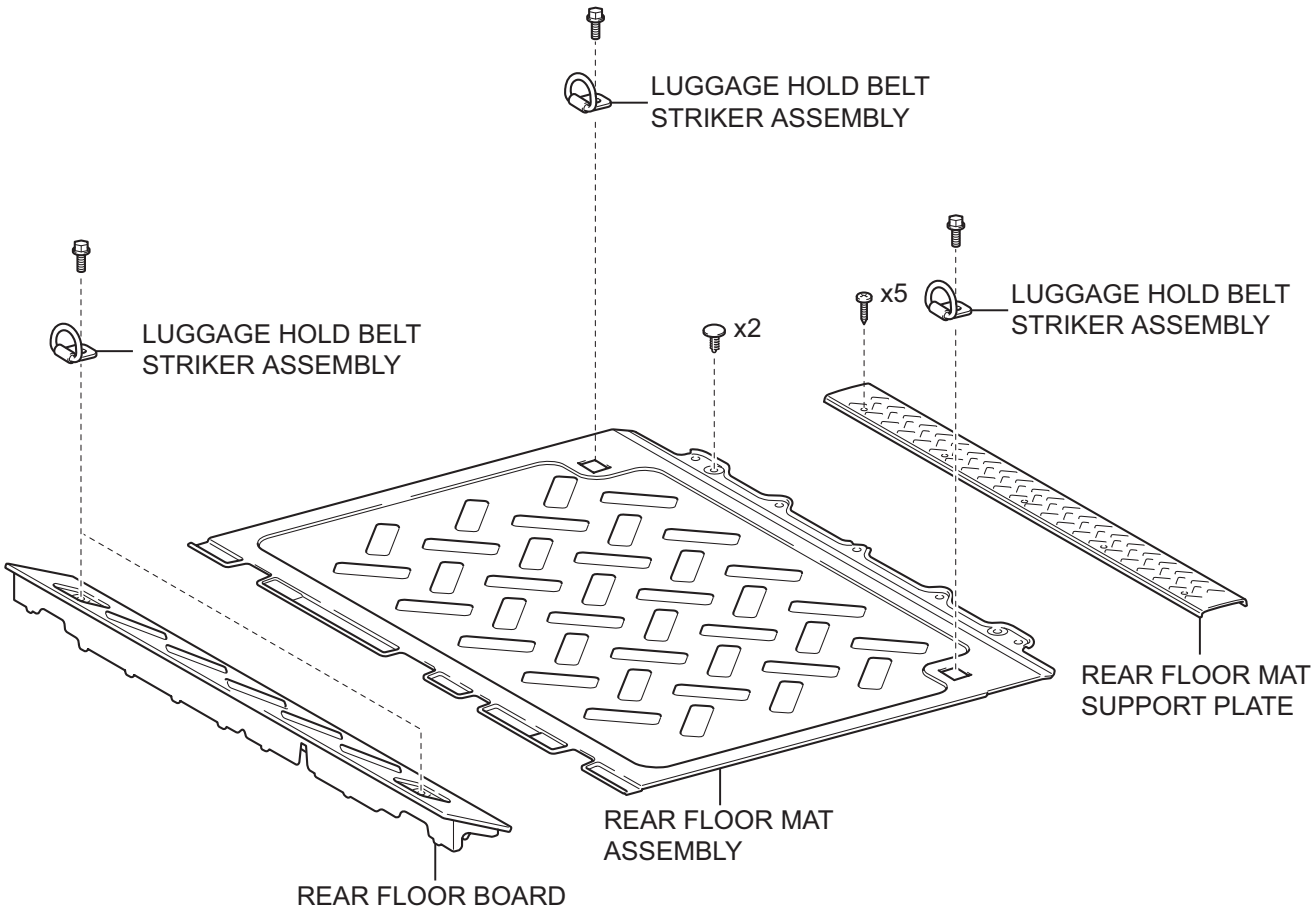

Y

B130655E01

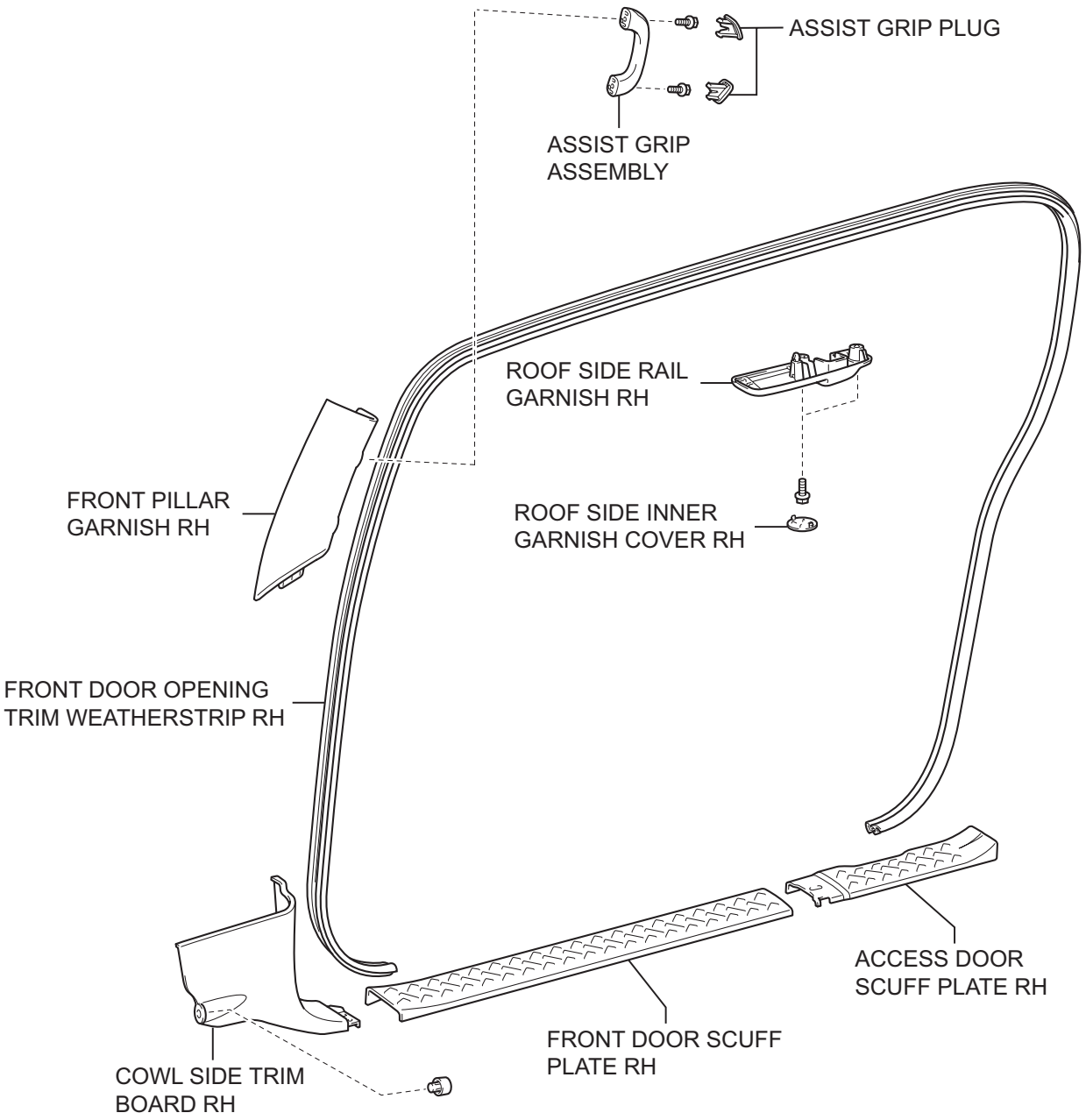

Y

B130656E01

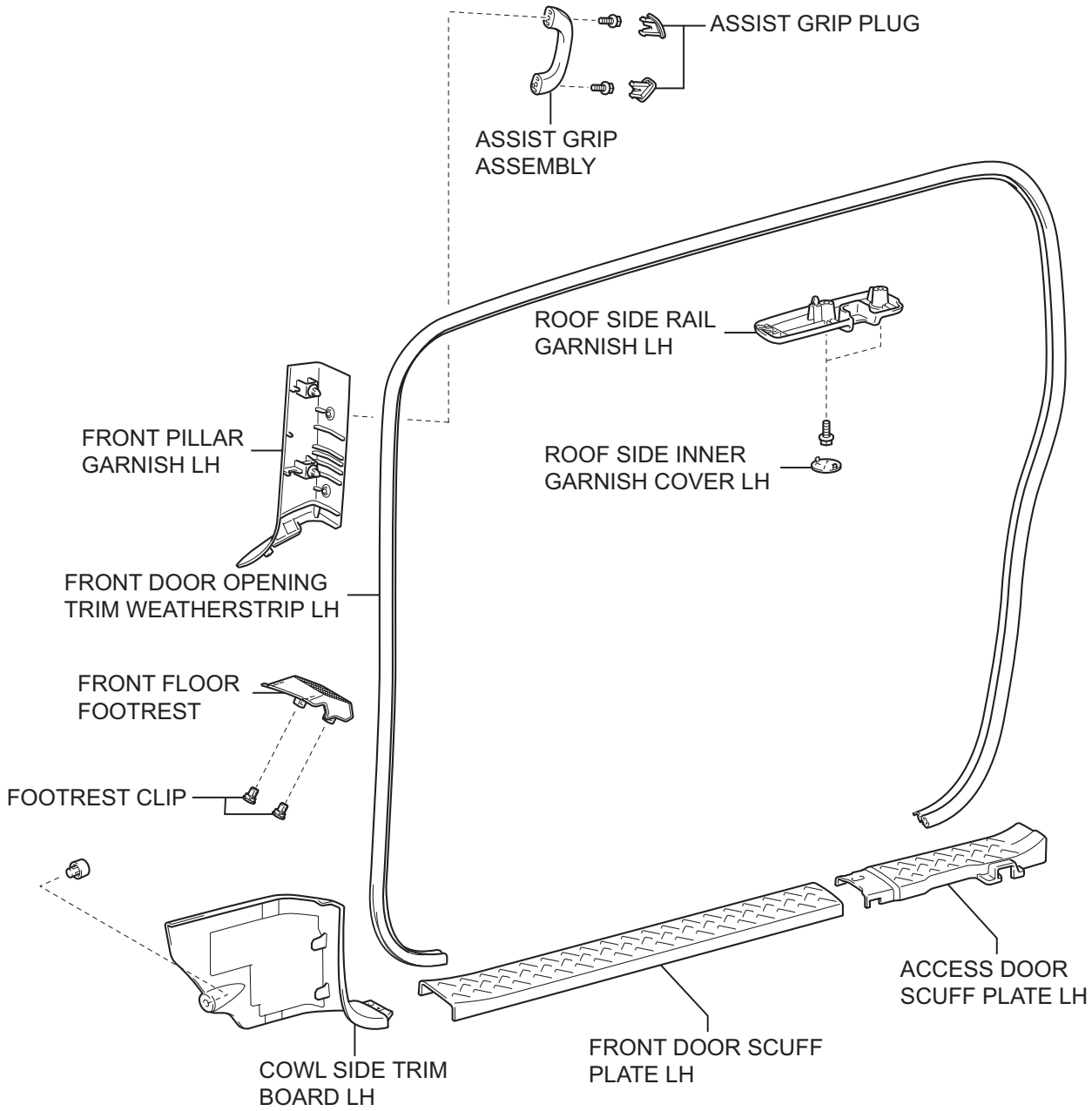

AV

Y

B130657E01

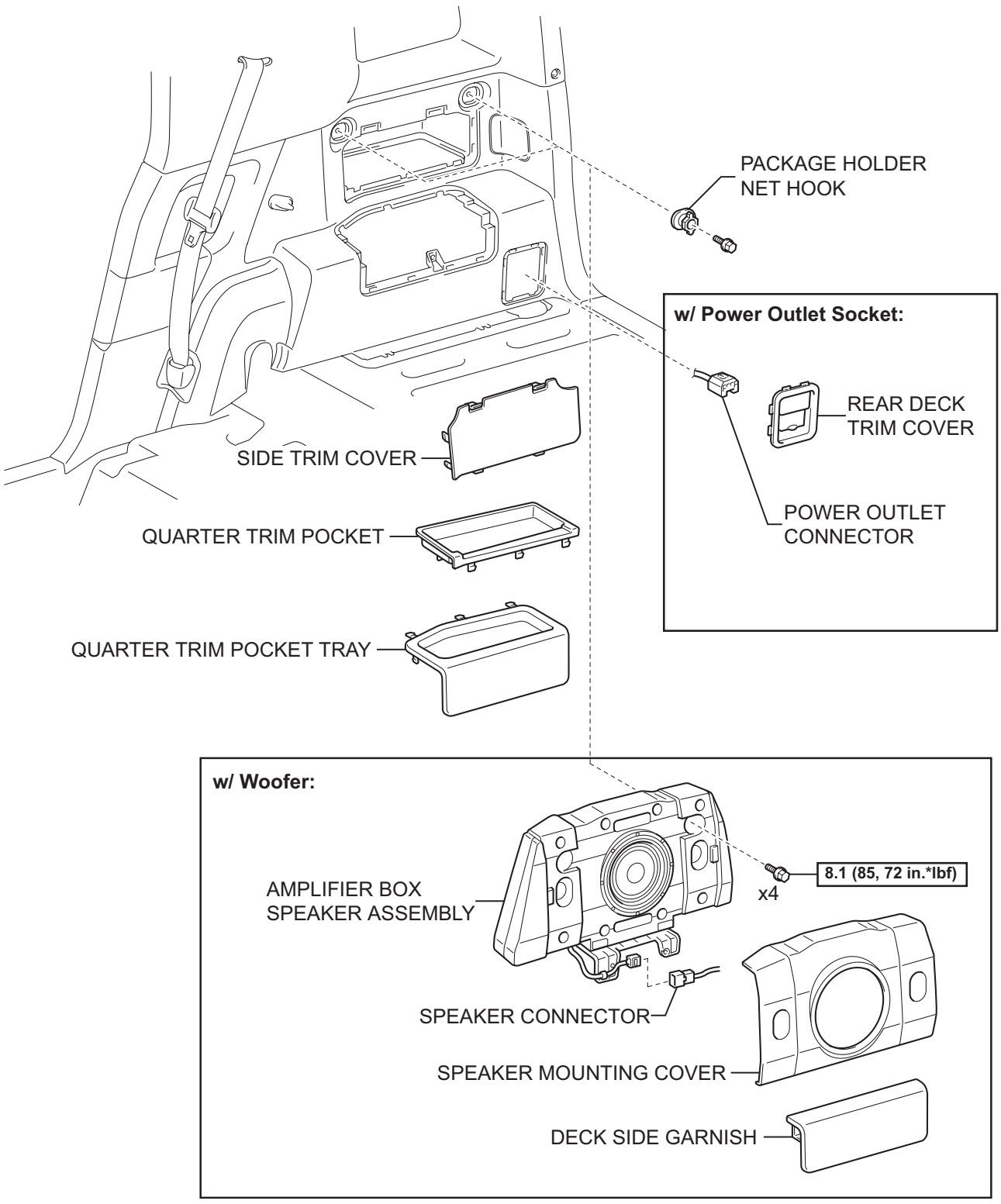

AV

N*m (kgf*cm, ft*lbf) : Specified torque

Y

B134989E01

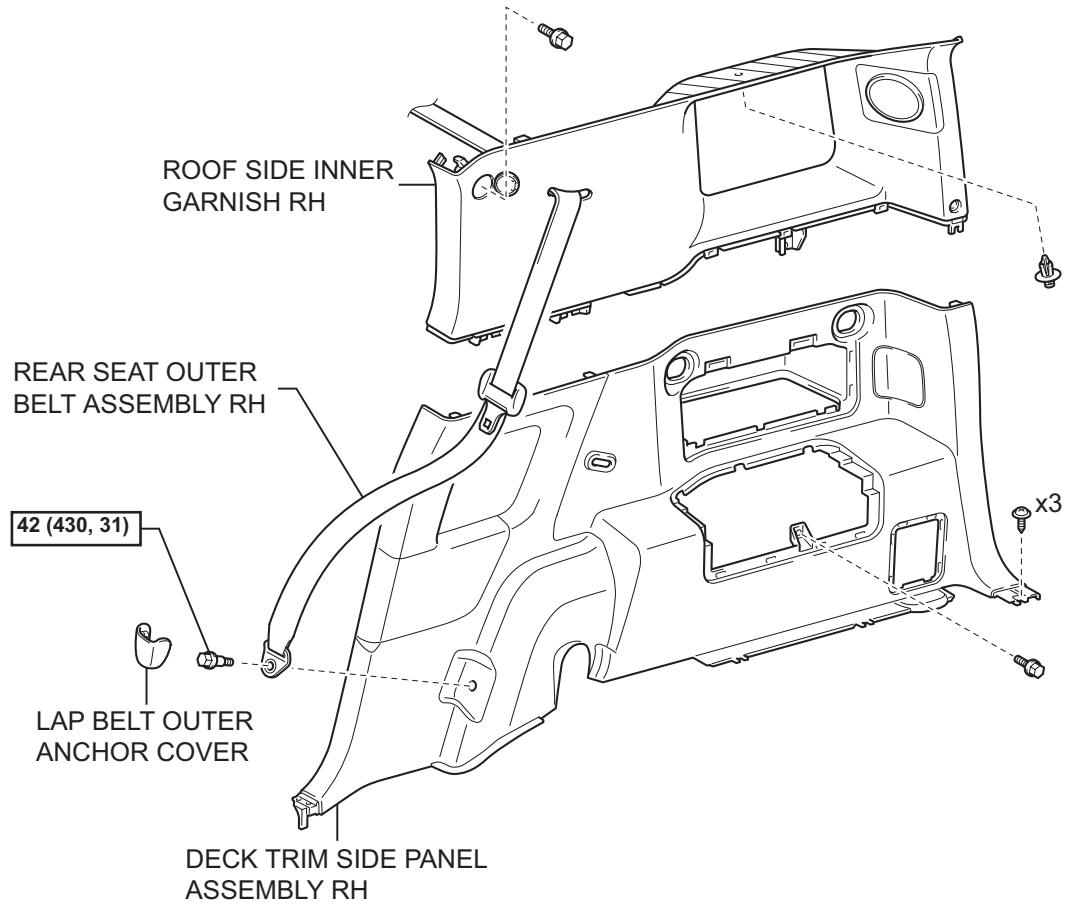

AV

N*m (kgf*cm, ft*lbf) : Specified torque

Y

B130658E01

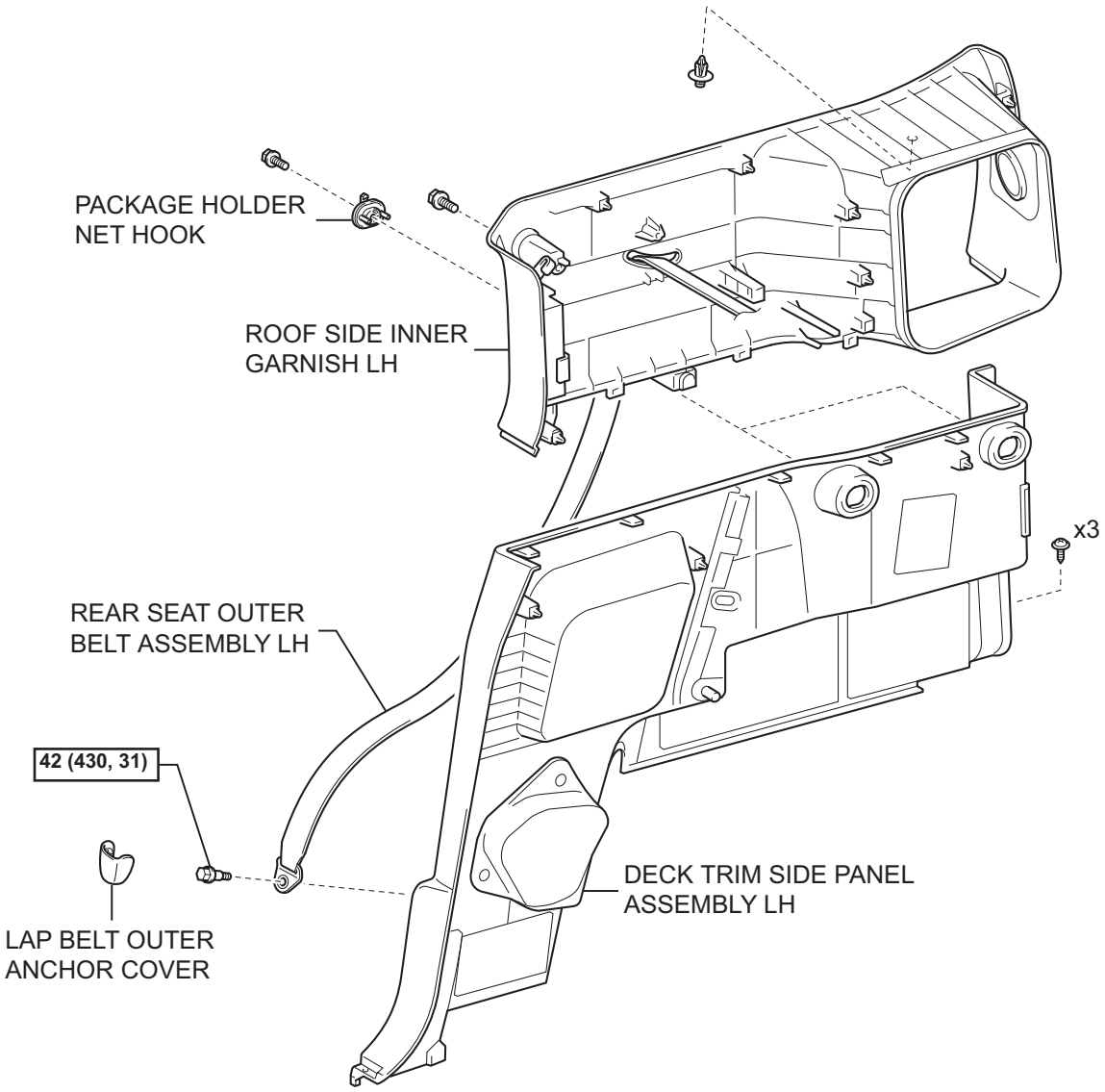

N*m (kgf*cm, ft*lbf) : Specified torque

Y

B130659E01

AV

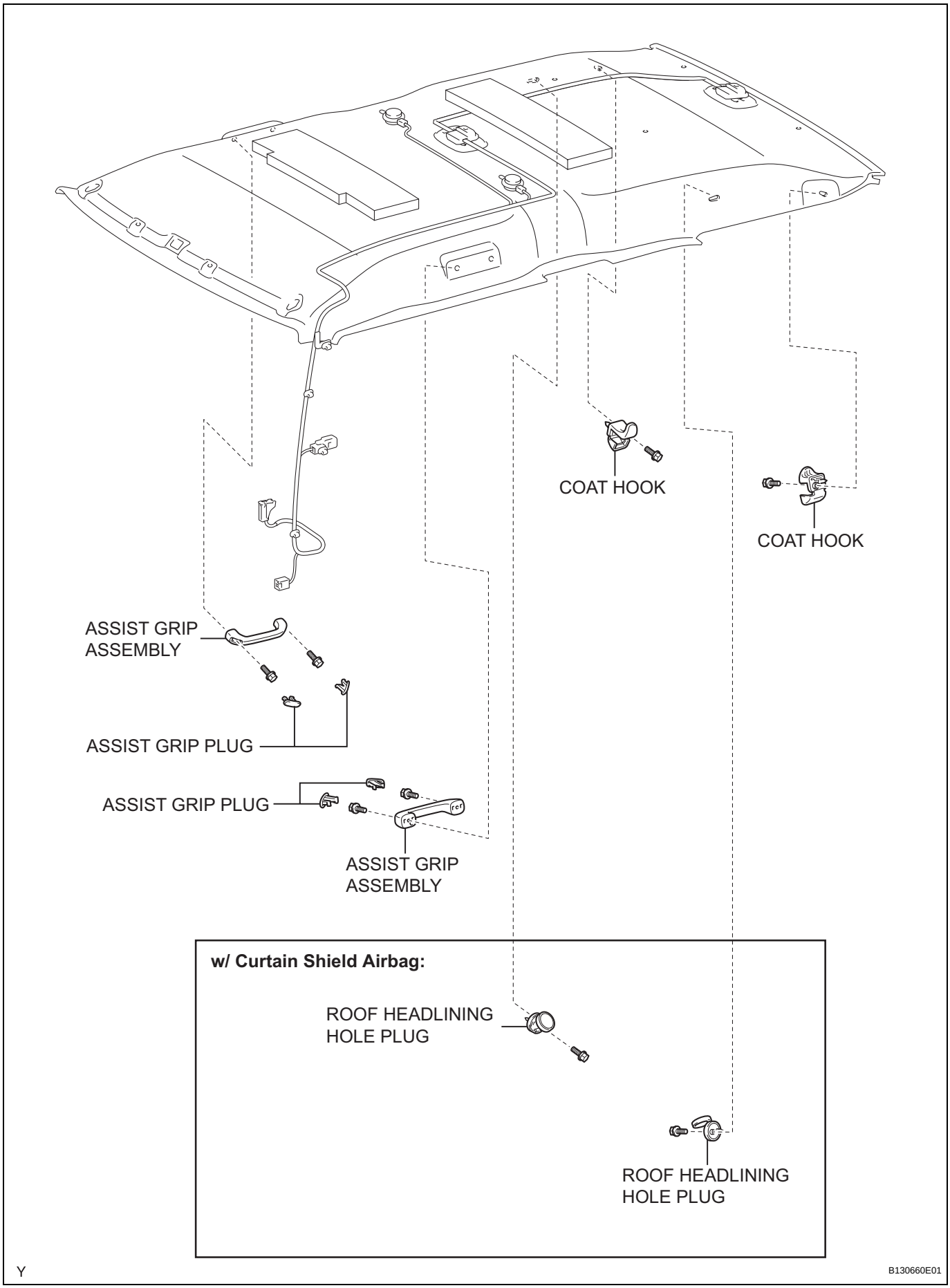
COAT HOOK
COAT HOOK
ASSIST GRIP ASSEMBLY
ASSIST GRIP PLUG
ASSIST GRIP PLUG
ASSIST GRIP ASSEMBLY
w/ Curtain Shield Airbag:
ROOF HEADLINING HOLE PLUG
ROOF HEADLINING HOLE PLUG
Y
B130660E01

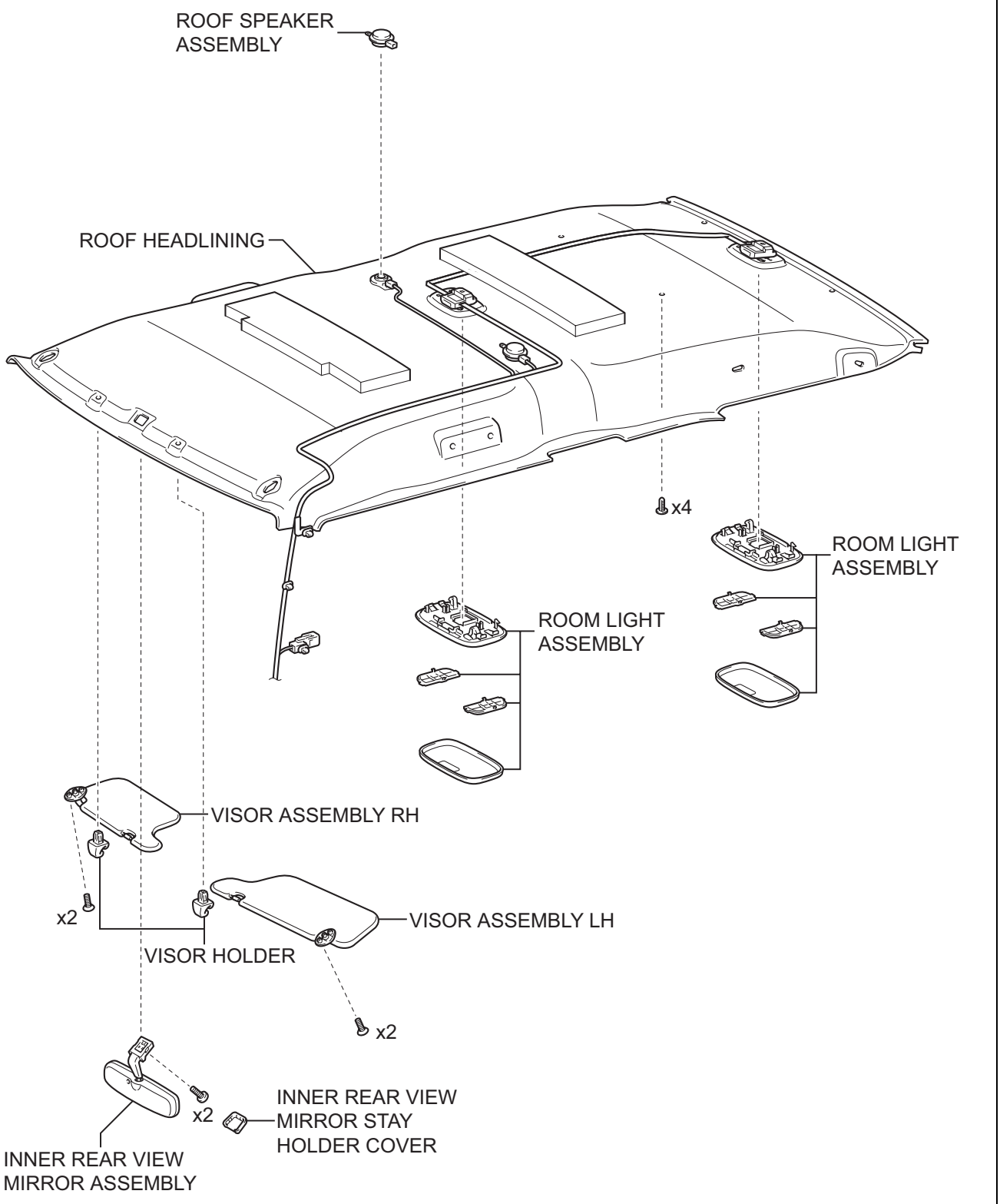

AV

Y

B135048E01

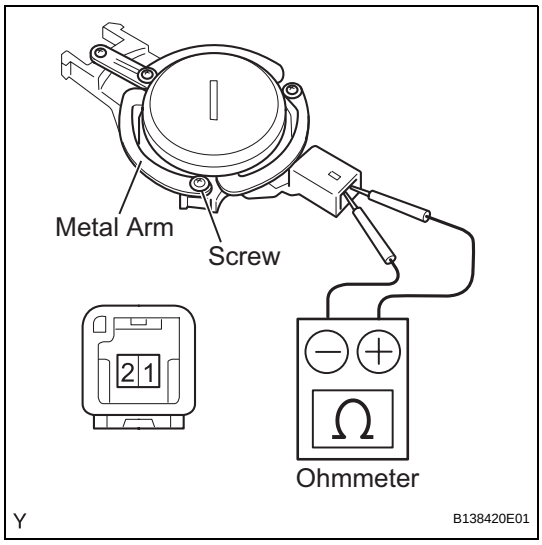

ON-VEHICLE INSPECTION

1. INSPECT ROOF SPEAKER ASSEMBLY

HINT:

Remove interior parts so that the roof speaker can be seen.

(a) Check the speaker installation.

OK:

The speaker is securely installed.

If the result is not as specified, reinstall the roof speaker.

(b) Visually check the speaker.

OK:

The metal arm of speaker is not bended.

The screw of speaker is not loosened.

If the result is not as specified, replace the roof speaker.

(c) Check the resistance.

(1) Disconnect the speaker connector.

(2) Using an ohmmeter, measure the resistance between the terminals.

Standard resistance

Tester connection	Specified Condition
1 - 2	Approximately 4 Ω

If the result is not as specified, replace the roof speaker.

REMOVAL

HINT:
The procedure described below is for the RH side. Use the same procedure for both the RH and LH sides, unless otherwise specified.

1. **DISCONNECT CABLE FROM NEGATIVE BATTERY TERMINAL**
2. **REMOVE REAR SEATBACK BOARD CARPET ASSEMBLY RH (See page SE-43)**
3. **REMOVE REAR SEATBACK ASSEMBLY RH (See page SE-43)**
4. **REMOVE REAR SEATBACK BOARD CARPET ASSEMBLY LH (See page SE-29)**
5. **REMOVE REAR SEATBACK ASSEMBLY LH (See page SE-29)**
6. **REMOVE REAR FLOOR BOARD (See page IR-13)**
7. **REMOVE REAR FLOOR MAT SUPPORT PLATE (See page IR-14)**
8. **REMOVE LUGGAGE HOLD BELT STRIKER ASSEMBLY (See page IR-14)**
9. **REMOVE REAR FLOOR MAT ASSEMBLY (See page IR-15)**
10. **REMOVE FRONT DOOR SCUFF PLATE RH (See page IR-15)**
11. **REMOVE FRONT DOOR SCUFF PLATE LH (See page IR-15)**
12. **REMOVE ACCESS DOOR SCUFF PLATE RH (See page IR-15)**
13. **REMOVE ACCESS DOOR SCUFF PLATE LH (See page IR-15)**
14. **REMOVE FRONT FLOOR FOOTREST (See page IR-2)**
15. **REMOVE FOOTREST CLIP (See page IR-2)**
16. **REMOVE COWL SIDE TRIM BOARD RH (See page IR-15)**
17. **REMOVE COWL SIDE TRIM BOARD LH (See page IR-15)**
18. **REMOVE ROOF SIDE INNER GARNISH COVER RH (See page IR-16)**
19. **REMOVE ROOF SIDE INNER GARNISH COVER LH (See page IR-16)**
20. **REMOVE ROOF SIDE RAIL GARNISH RH (See page IR-16)**
21. **REMOVE ROOF SIDE RAIL GARNISH LH (See page IR-16)**

22. REMOVE FRONT DOOR OPENING TRIM WEATHERSTRIP RH (See page IR-16)
23. REMOVE FRONT DOOR OPENING TRIM WEATHERSTRIP LH (See page IR-16)
24. REMOVE ASSIST GRIP PLUG (See page IR-17)
25. REMOVE ASSIST GRIP ASSEMBLY (See page IR-17)
26. REMOVE FRONT PILLAR GARNISH RH (See page IR-18)
27. REMOVE FRONT PILLAR GARNISH LH (See page IR-18)
28. REMOVE DECK SIDE GARNISH (w/ Woofer) (See page IR-18)
29. REMOVE SPEAKER MOUNTING COVER (w/ Woofer) (See page AV-90)
30. REMOVE AMPLIFIER BOX SPEAKER ASSEMBLY (w/ Woofer) (See page AV-90)
31. REMOVE PACKAGE HOLDER NET HOOK (See page IR-18)
32. REMOVE QUARTER TRIM POCKET TRAY (w/o Woofer) (See page IR-19)
33. REMOVE SIDE TRIM COVER (w/o Woofer) (See page IR-19)
34. REMOVE QUARTER TRIM POCKET (w/o Woofer) (See page IR-19)
35. REMOVE LAP BELT OUTER ANCHOR COVER (See page IR-20)
36. REMOVE REAR SEAT OUTER BELT ASSEMBLY RH (See page IR-20)
37. REMOVE REAR SEAT OUTER BELT ASSEMBLY LH (See page IR-20)
38. REMOVE REAR DECK TRIM COVER (w/ Power Outlet Socket) (See page IR-20)
39. REMOVE DECK TRIM SIDE PANEL ASSEMBLY RH (See page IR-21)
40. REMOVE DECK TRIM SIDE PANEL ASSEMBLY LH (See page IR-21)
41. REMOVE ROOF SIDE INNER GARNISH RH (See page IR-22)
42. REMOVE ROOF SIDE INNER GARNISH LH (See page IR-22)
43. REMOVE ROOF HEADLINING HOLE PLUG (w/ Curtain Shield Airbag) (See page IR-23)
44. REMOVE COAT HOOK (See page IR-24)
45. REMOVE VISOR ASSEMBLY RH (See page IR-24)

46. **REMOVE VISOR ASSEMBLY LH (See page IR-24)**
47. **REMOVE VISOR HOLDER (See page IR-25)**
48. **REMOVE INNER REAR VIEW MIRROR STAY HOLDER COVER (See page MI-6)**
49. **REMOVE INNER REAR VIEW MIRROR ASSEMBLY (See page MI-6)**
50. **REMOVE ROOM LIGHT ASSEMBLY (See page IR-25)**
51. **REMOVE ROOF HEADLINING**
    (a) Using a clip remover, remove the 3 clamps and the connector.
    (b) Using a clip remover, remove the 4 clips.

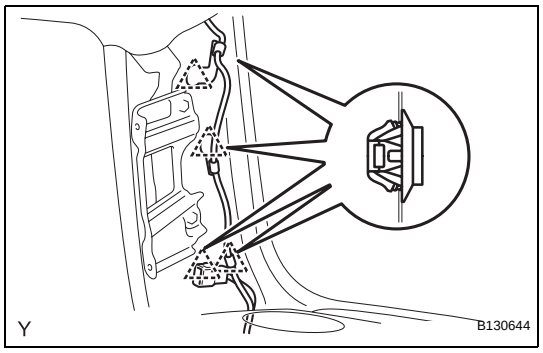

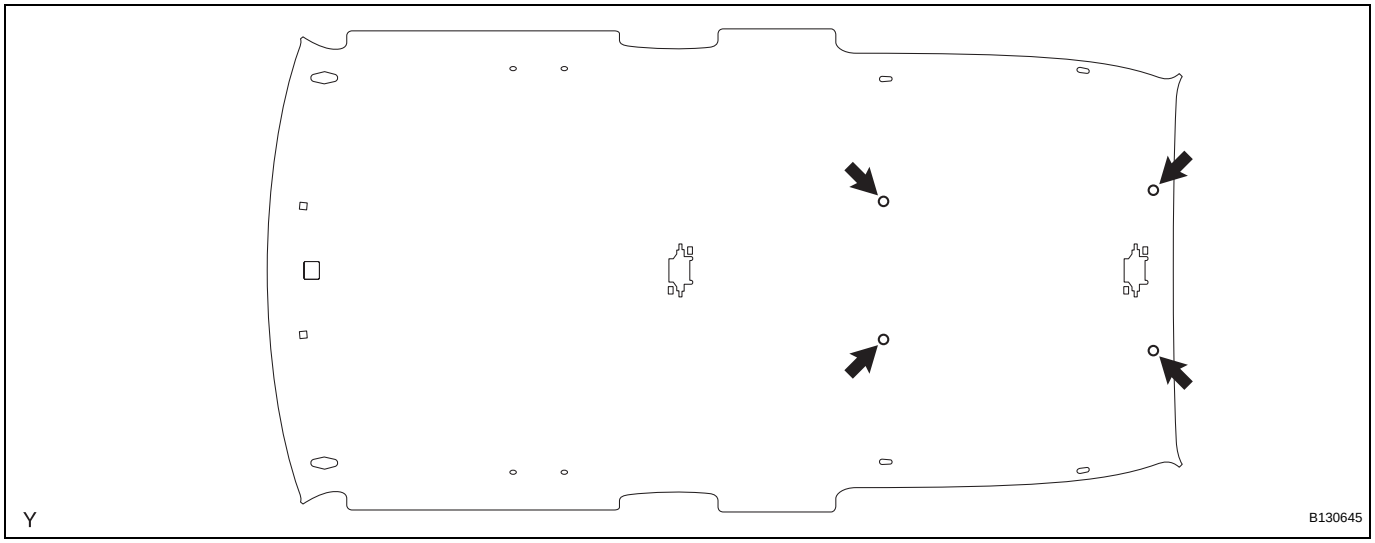

52. **REMOVE ROOF SPEAKER ASSEMBLY**
    (a) Disconnect the speaker connector.
    (b) Loosen the screw.

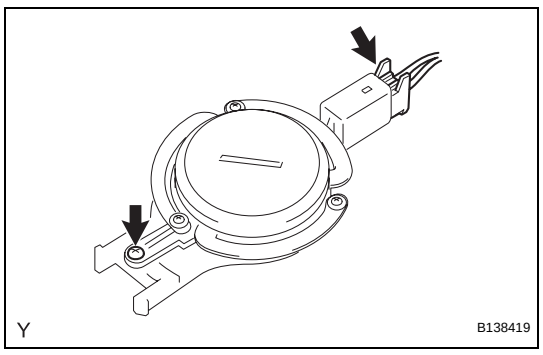

AV

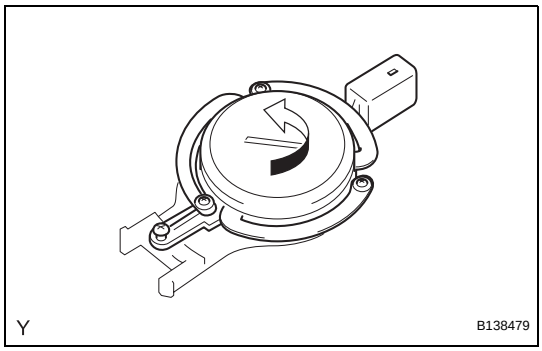

(c) Remove the roof speaker by turning it in the direction of the arrow shown in the illustration.

INSTALLATION

HINT:
The procedure described below is for the RH side. Use the same procedure for both the RH and LH sides, unless otherwise specified.

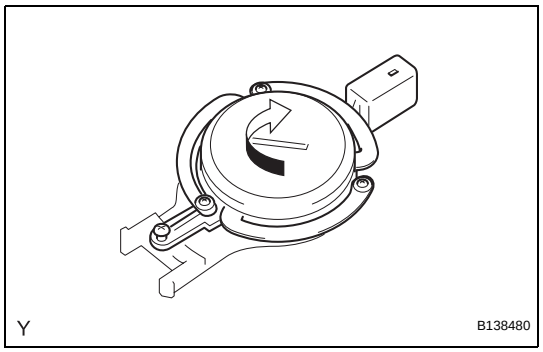

1. INSTALL ROOF SPEAKER ASSEMBLY

(a) Install the roof speaker by turning it in the direction of the arrow shown in the illustration.

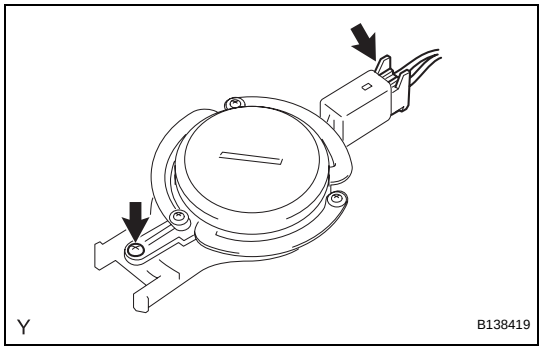

(b) Tighten the screw.

(c) Connect the speaker connector.

2. INSTALL ROOF HEADLINING

(a) Install the roof headlining with the 4 clips.

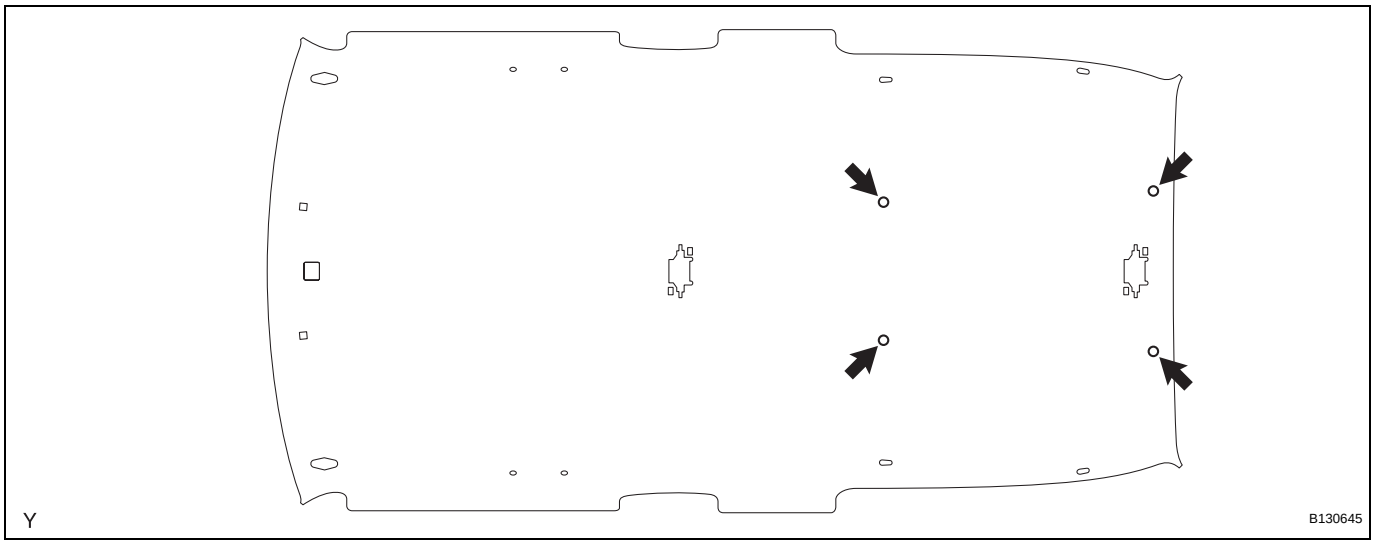

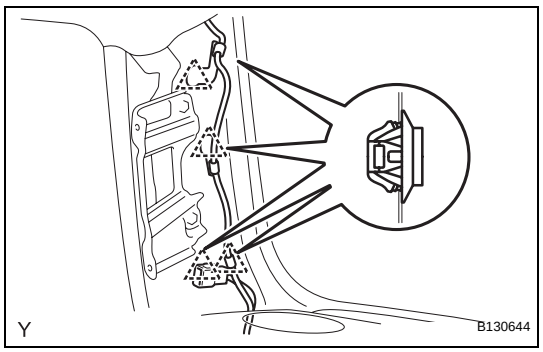

(b) Install the 3 clamps and the connector.

3. INSTALL ROOM LIGHT ASSEMBLY (See page IR-34)

4. INSTALL INNER REAR VIEW MIRROR ASSEMBLY (See page MI-6)

5. INSTALL INNER REAR VIEW MIRROR STAY HOLDER COVER (See page MI-6)

6. INSTALL VISOR HOLDER (See page IR-36)

7. INSTALL VISOR ASSEMBLY RH (See page IR-36)

AV

8. INSTALL VISOR ASSEMBLY LH (See page IR-36)
9. INSTALL COAT HOOK (See page IR-36)
10. INSTALL ROOF HEADLINING HOLE PLUG (w/ Curtain Shield Airbag) (See page IR-37)
11. INSTALL ROOF SIDE INNER GARNISH RH (See page IR-38)
12. INSTALL ROOF SIDE INNER GARNISH LH (See page IR-38)
13. INSTALL DECK TRIM SIDE PANEL ASSEMBLY RH (See page IR-39)
14. INSTALL DECK TRIM SIDE PANEL ASSEMBLY LH (See page IR-39)
15. INSTALL REAR DECK TRIM COVER (w/ Power Outlet Socket) (See page IR-40)
16. INSTALL REAR SEAT OUTER BELT ASSEMBLY RH (See page IR-40)
17. INSTALL REAR SEAT OUTER BELT ASSEMBLY LH (See page IR-40)
18. INSTALL LAP BELT OUTER ANCHOR COVER (See page IR-41)
19. INSTALL AMPLIFIER BOX SPEAKER ASSEMBLY (w/ Woofer) (See page AV-90)
20. INSTALL SPEAKER MOUNTING COVER (w/ Woofer) (See page AV-91)
21. INSTALL DECK SIDE GARNISH (w/ Woofer) (See page IR-41)
22. INSTALL QUARTER TRIM POCKET (w/o Woofer) (See page IR-41)
23. INSTALL SIDE TRIM COVER (w/o Woofer) (See page IR-42)
24. INSTALL QUARTER TRIM POCKET TRAY (w/o Woofer) (See page IR-42)
25. INSTALL PACKAGE HOLDER NET HOOK (See page IR-42)
26. INSTALL FRONT PILLAR GARNISH RH (See page IR-43)
27. INSTALL FRONT PILLAR GARNISH LH (See page IR-43)
28. INSTALL ASSIST GRIP ASSEMBLY (See page IR-43)
29. INSTALL ASSIST GRIP PLUG (See page IR-44)
30. INSTALL FRONT DOOR OPENING TRIM WEATHERSTRIP RH (See page IR-44)
31. INSTALL FRONT DOOR OPENING TRIM WEATHERSTRIP LH (See page IR-44)

32. INSTALL ROOF SIDE RAIL GARNISH RH (See page IR-44)
33. INSTALL ROOF SIDE RAIL GARNISH LH (See page IR-44)
34. INSTALL ROOF SIDE INNER GARNISH COVER RH (See page IR-45)
35. REMOVE ROOF SIDE INNER GARNISH COVER LH (See page IR-45)
36. INSTALL COWL SIDE TRIM BOARD RH (See page IR-45)
37. INSTALL COWL SIDE TRIM BOARD LH (See page IR-45)
38. INSTALL FOOTREST CLIP (See page IR-2)
39. INSTALL FRONT FLOOR FOOTREST (See page IR-2)
40. INSTALL ACCESS DOOR SCUFF PLATE RH (See page IR-45)
41. INSTALL ACCESS DOOR SCUFF PLATE LH (See page IR-45)
42. INSTALL FRONT DOOR SCUFF PLATE RH (See page IR-45)
43. INSTALL FRONT DOOR SCUFF PLATE LH (See page IR-45)
44. INSTALL REAR FLOOR MAT ASSEMBLY (See page IR-46)
45. INSTALL LUGGAGE HOLD BELT STRIKER ASSEMBLY (See page IR-46)
46. INSTALL REAR FLOOR MAT SUPPORT PLATE (See page IR-46)
47. INSTALL REAR FLOOR BOARD (See page IR-47)
48. INSTALL REAR SEATBACK ASSEMBLY RH (See page SE-54)
49. INSTALL REAR SEATBACK BOARD CARPET ASSEMBLY RH (See page SE-54)
50. INSTALL REAR SEATBACK ASSEMBLY LH (See page SE-38)
51. INSTALL REAR SEATBACK BOARD CARPET ASSEMBLY LH (See page SE-38)
52. CONNECT CABLE TO NEGATIVE BATTERY TERMINAL
    Torque: 3.9 N*m (40 kgf*cm, 35 in.*lbf)

AMPLIFIER BOX SPEAKER ASSEMBLY

COMPONENTS

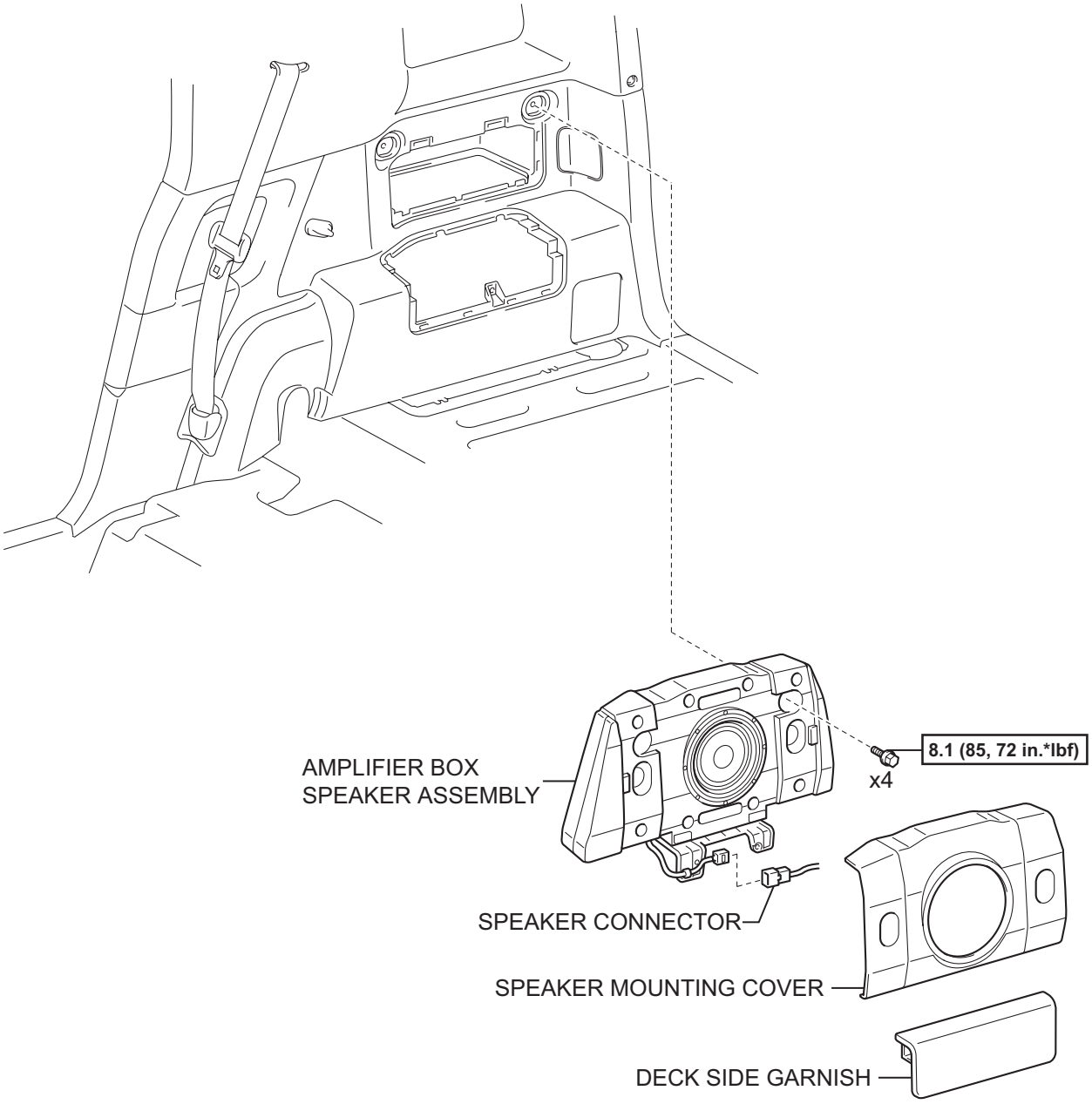

N*m (kgf*cm, ft*lbf) : Specified torque

Y

B134988E01

REMOVAL

1. **DISCONNECT CABLE FROM NEGATIVE BATTERY TERMINAL**
2. **REMOVE DECK SIDE GARNISH (See page IR-18)**
3. **REMOVE SPEAKER MOUNTING COVER**
   (a) Disengage the 8 clips and remove the speaker mounting cover.

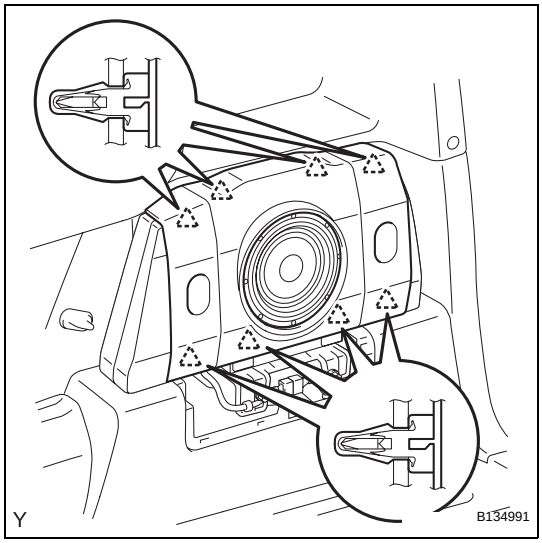

4. **REMOVE AMPLIFIER BOX SPEAKER ASSEMBLY**
   (a) Disconnect the speaker connector.
   (b) Remove the 4 screws and the amplifier box speaker.

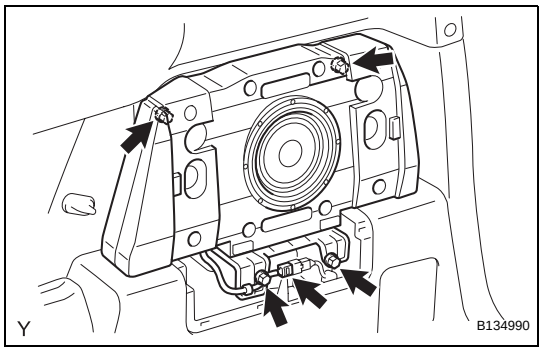

INSTALLATION

1. **INSTALL AMPLIFIER BOX SPEAKER ASSEMBLY**
   (a) Install the amplifier box speaker with the 4 screws.
   Torque: 8.1 N*m (85 kgf*cm, 72 in.*lbf)
   (b) Connect the speaker connector.

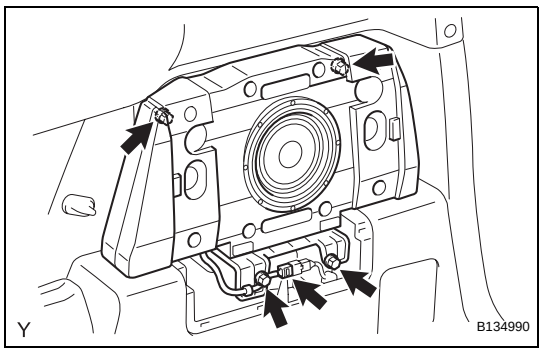

AV

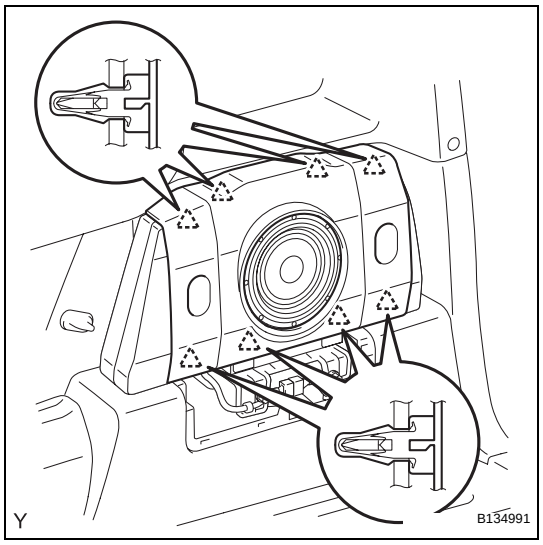

2. INSTALL SPEAKER MOUNTING COVER

(a) Engage the 8 clips and install the speaker mounting cover.

3. INSTALL DECK SIDE GARNISH (See page IR-41)

4. CONNECT CABLE TO NEGATIVE BATTERY TERMINAL

Torque: 3.9 N*m (40 kgf*cm, 35 in.*lbf)

RADIO ANTENNA CORD

COMPONENTS

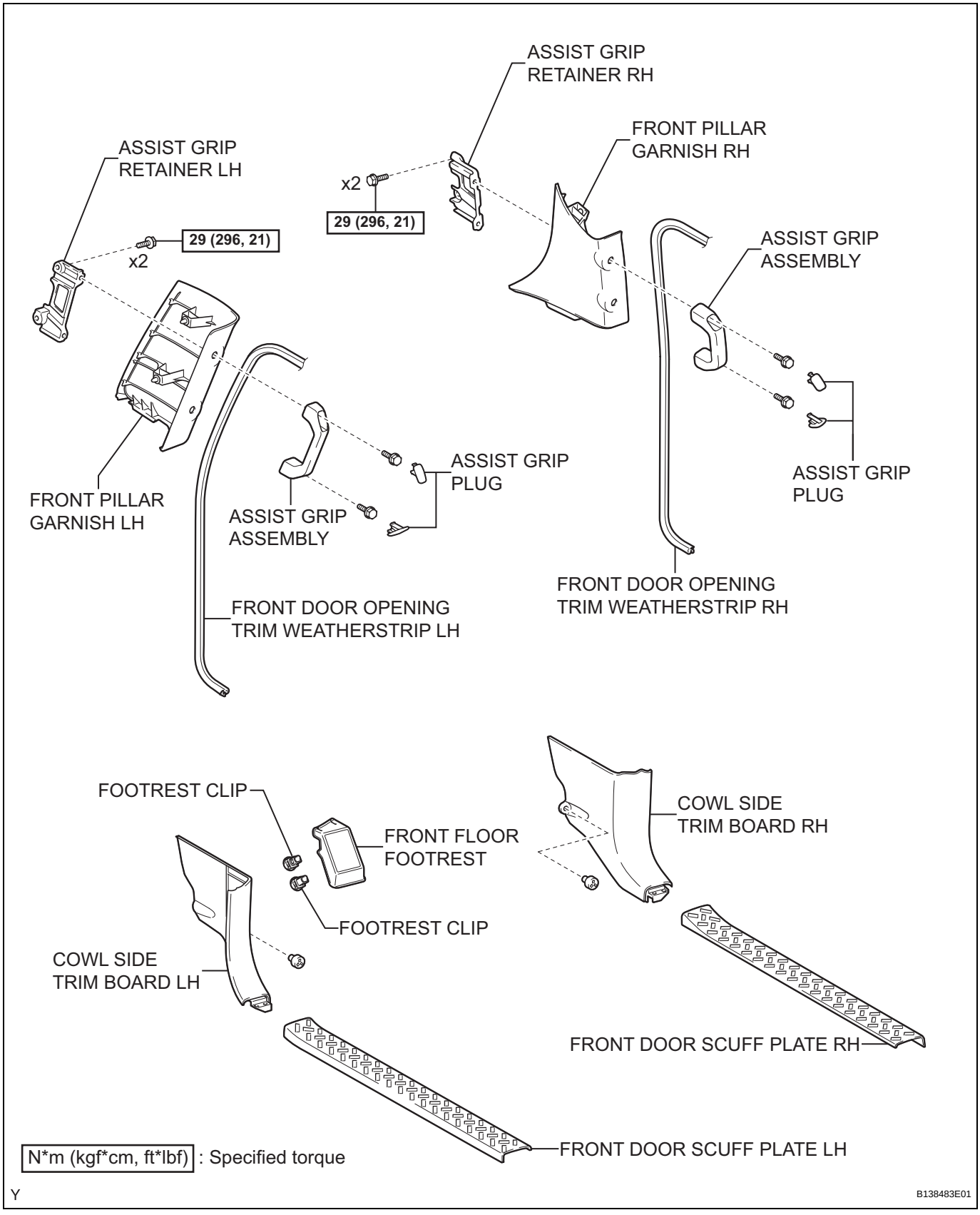

AV

for Automatic Transmission 4WD:

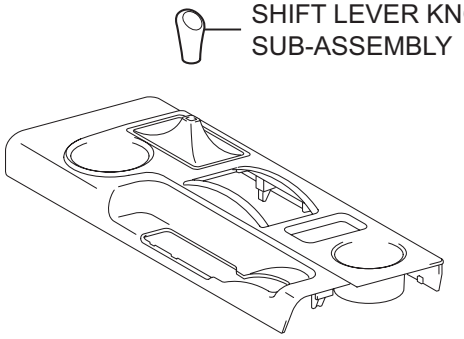

for Manual Transmission:

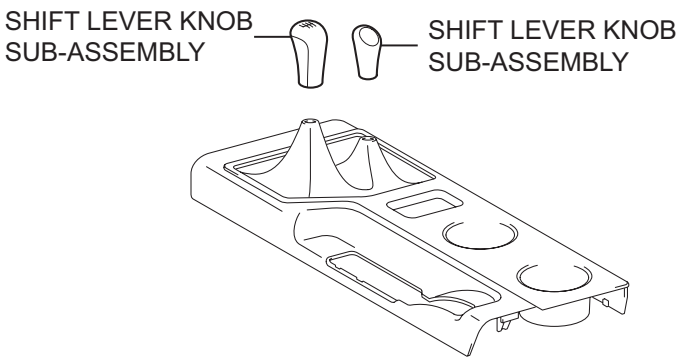

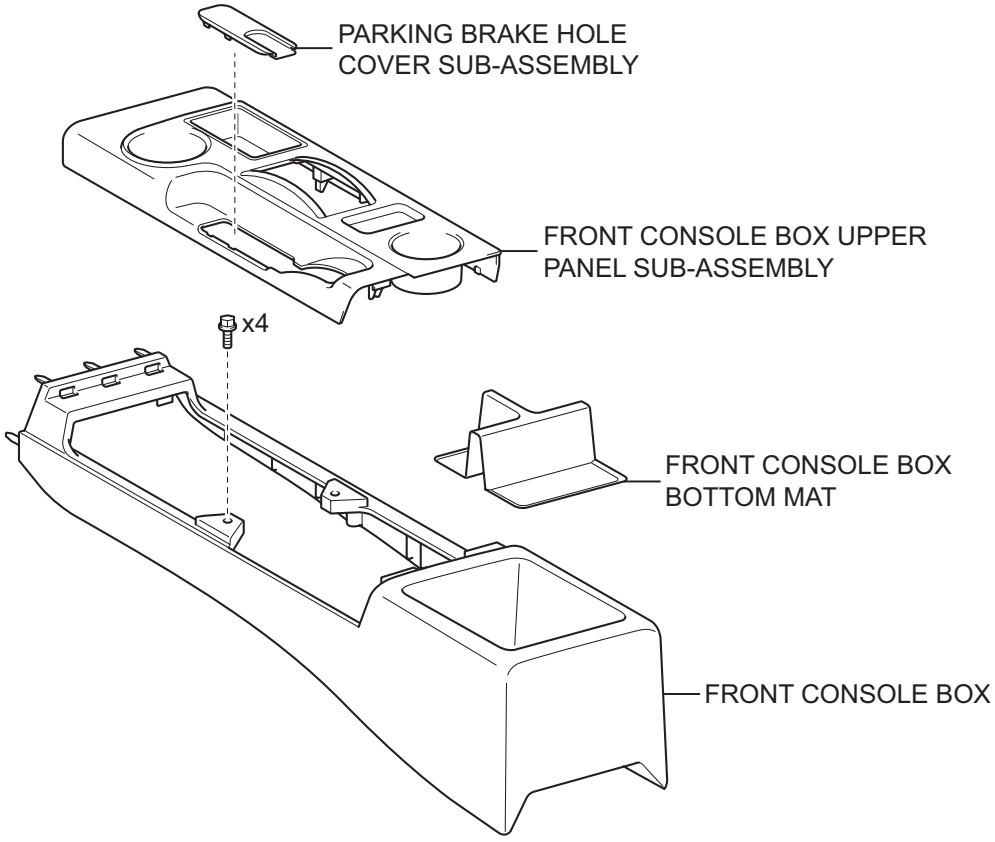

AV

Y

B138638E01

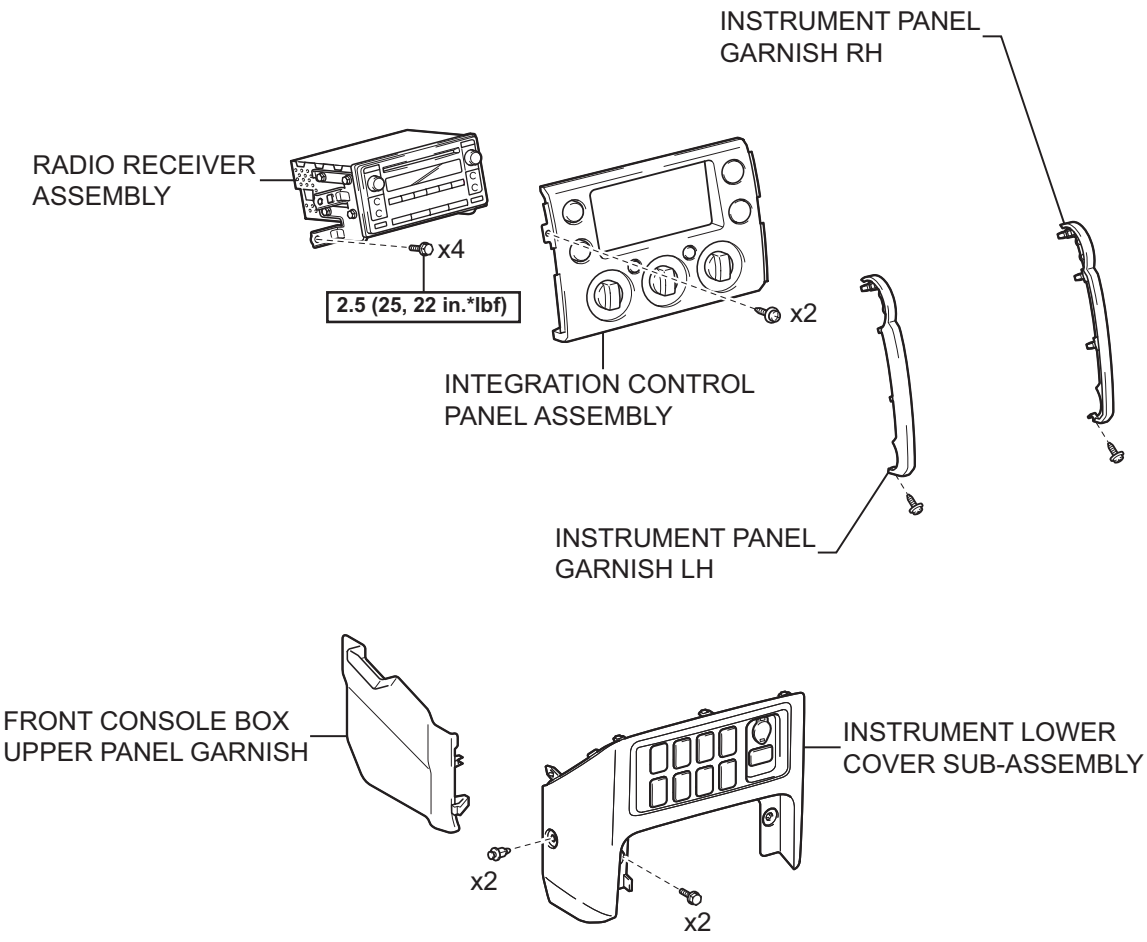

AV

N*m (kgf*cm, ft*lbf) : Specified torque

P

B138484E01

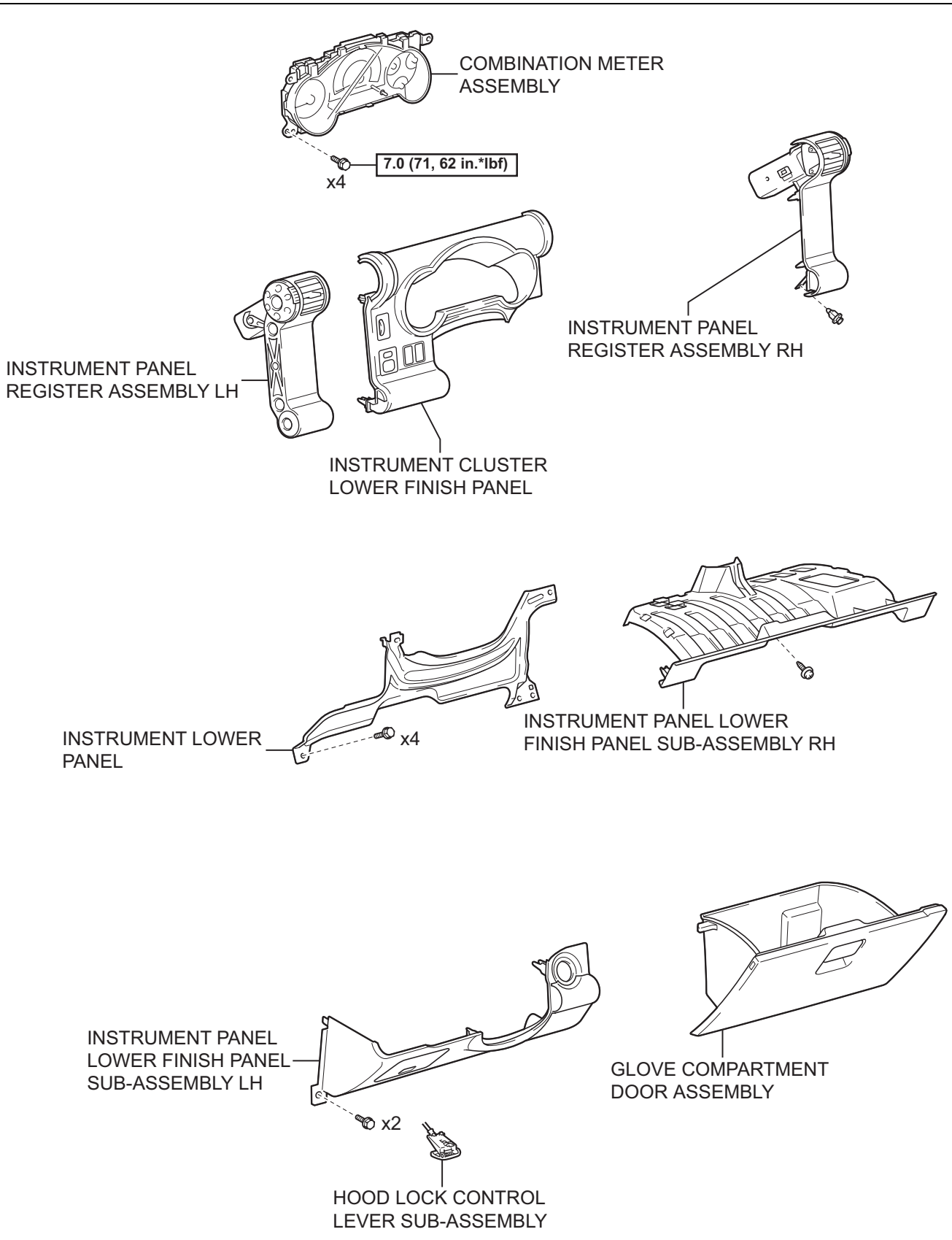

AV

N*m (kgf*cm, ft*lbf) : Specified torque

P

B138485E01

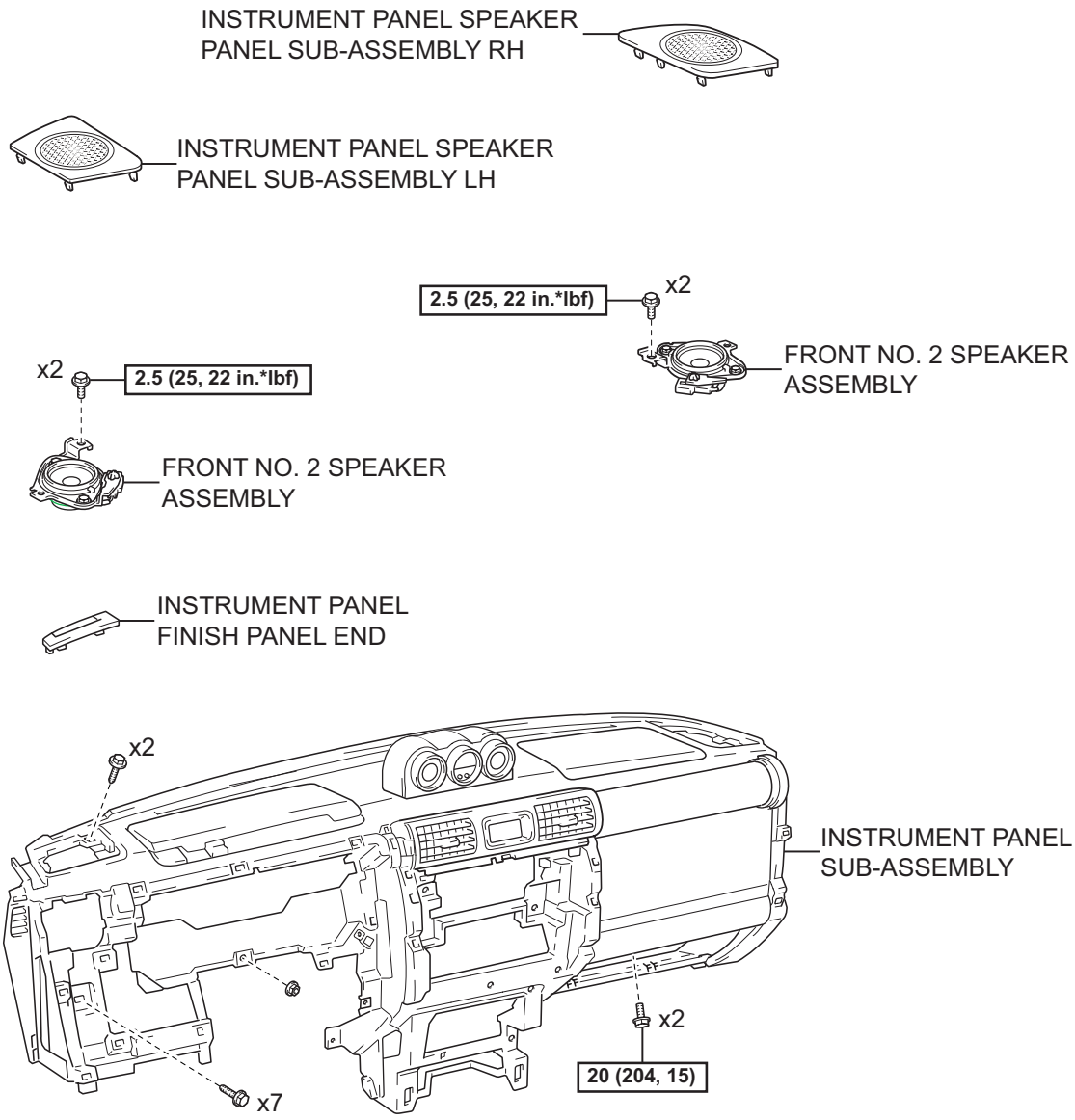

AV

N*m (kgf*cm, ft*lbf) : Specified torque

P

B138486E01

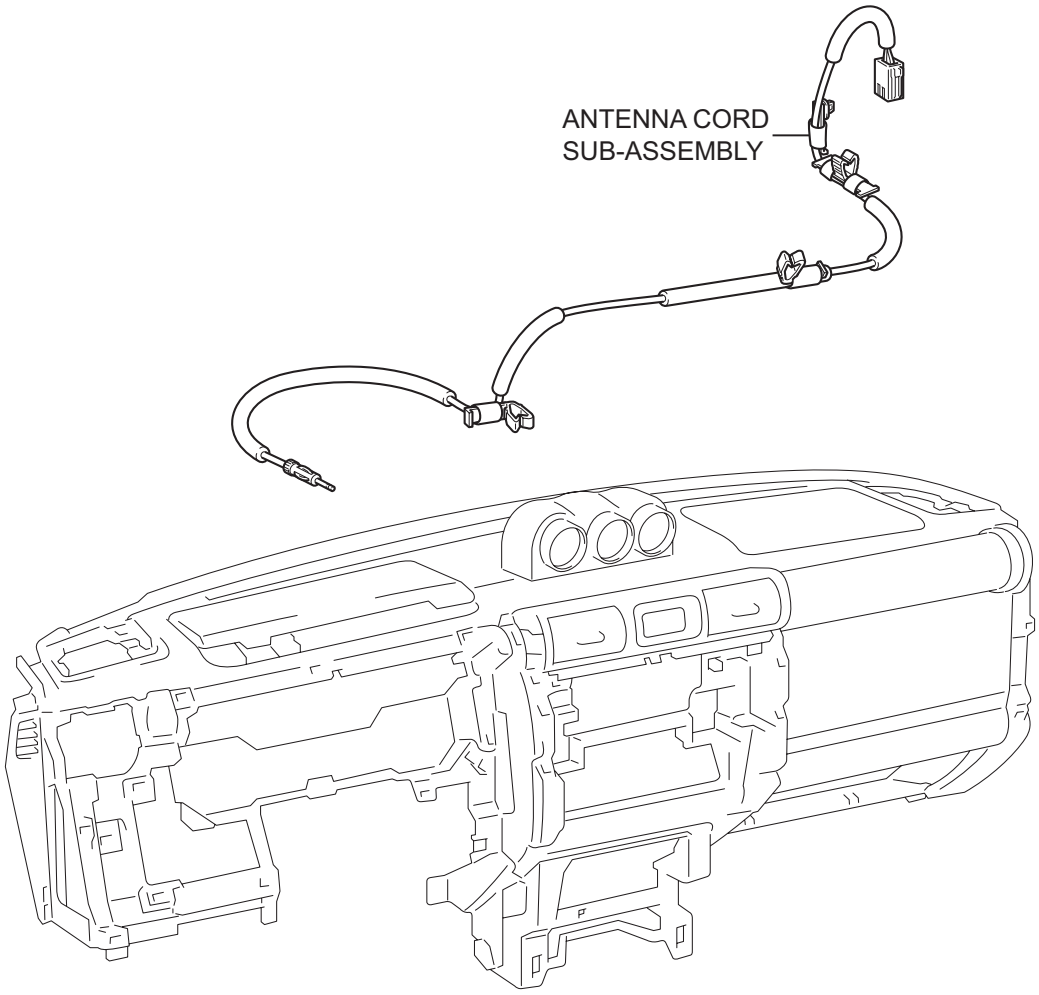

Y

B135180E01

REMOVAL

CAUTION:
Some of these service operations affect the SRS airbag system. Read the precautionary notices concerning the SRS airbag system before servicing (See page RS-1).

1. **DISCONNECT CABLE FROM NEGATIVE BATTERY TERMINAL**
   CAUTION:
   Wait for at least 90 seconds after disconnecting the cable to prevent the airbag from working.
2. **REMOVE FRONT DOOR SCUFF PLATE RH (See page IR-15)**
3. **REMOVE FRONT DOOR SCUFF PLATE LH (See page IR-15)**
4. **REMOVE FRONT FLOOR FOOTREST (See page IR-2)**
5. **REMOVE FOOTREST CLIP (See page IR-2)**
6. **REMOVE COWL SIDE TRIM BOARD RH (See page IR-15)**
7. **REMOVE COWL SIDE TRIM BOARD LH (See page IR-15)**
8. **SEPARATE FRONT DOOR OPENING TRIM WEATHERSTRIP RH**
   (a) Remove the front door opening trim weatherstrip to the extent that the front pillar garnish and the instrument panel lower finish panel can be removed.
9. **SEPARATE FRONT DOOR OPENING TRIM WEATHERSTRIP LH**
   HINT:
   Use the same procedure as for the RH side.

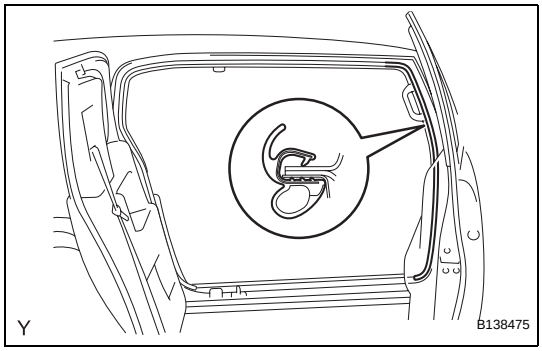

AV

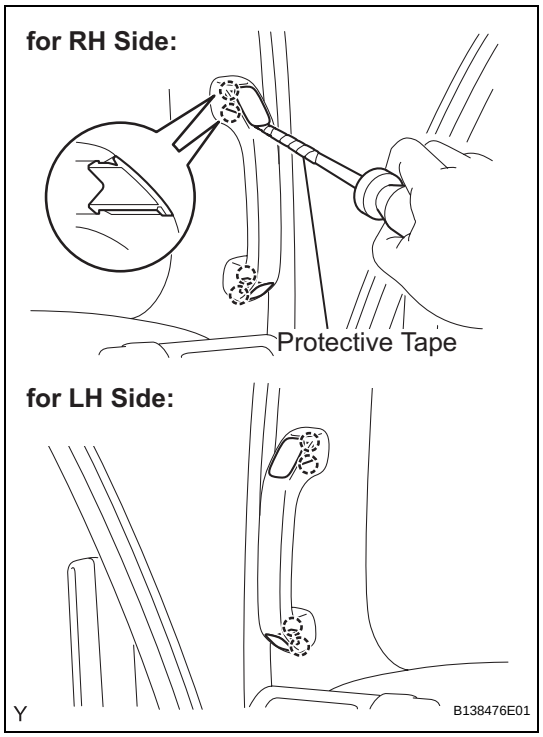

10. **REMOVE ASSIST GRIP PLUG**
HINT:
Use the same procedure to remove all the assist grip plugs.
(a) Using a screwdriver with its tip wrapped in protective tape, disengage the 2 claws and remove the assist grip plug.

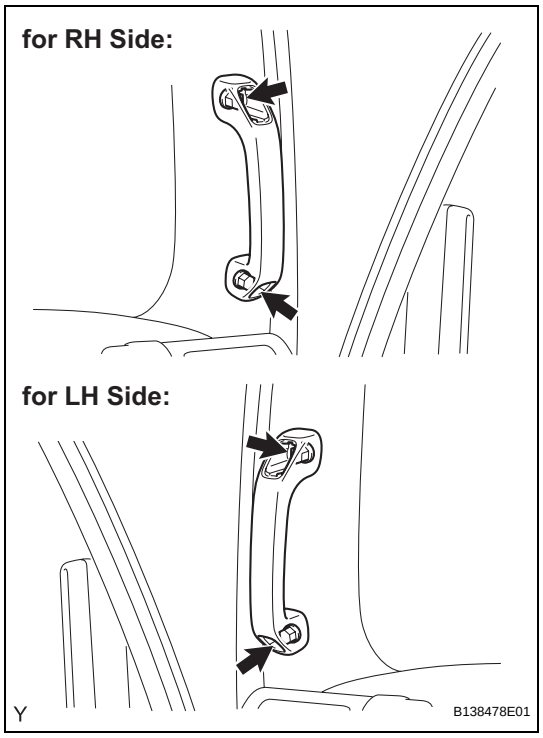

11. **REMOVE ASSIST GRIP ASSEMBLY**
HINT:
Use the same procedure to remove all the assist grips.
(a) Remove the 2 screws and the assist grip.
12. **REMOVE FRONT PILLAR GARNISH RH (See page IR-18)**
13. **REMOVE FRONT PILLAR GARNISH LH (See page IR-18)**
14. **REMOVE ASSIST GRIP RETAINER RH (See page IP-16)**
15. **REMOVE ASSIST GRIP RETAINER LH (See page IP-16)**
16. **REMOVE INSTRUMENT PANEL GARNISH LH (See page IP-10)**
17. **REMOVE INSTRUMENT PANEL GARNISH RH (See page IP-10)**
18. **REMOVE INTEGRATION CONTROL PANEL ASSEMBLY (See page IP-11)**
19. **REMOVE RADIO RECEIVER ASSEMBLY (See page AV-55)**
20. **REMOVE PARKING BRAKE HOLE COVER SUB-ASSEMBLY (See page IP-11)**
21. **REMOVE SHIFT LEVER KNOB SUB-ASSEMBLY (for Manual Transmission) (See page IP-11)**
22. **REMOVE SHIFT LEVER KNOB SUB-ASSEMBLY (for 4WD) (See page IP-11)**

23. **REMOVE FRONT CONSOLE BOX UPPER PANEL SUB-ASSEMBLY (See page IP-12)**
24. **REMOVE FRONT CONSOLE BOX BOTTOM MAT (See page IP-12)**
25. **REMOVE FRONT CONSOLE BOX (See page IP-12)**
26. **REMOVE FRONT CONSOLE BOX UPPER PANEL GARNISH (See page IP-12)**
27. **REMOVE INSTRUMENT LOWER COVER SUB-ASSEMBLY (See page IP-13)**
28. **REMOVE INSTRUMENT PANEL REGISTER ASSEMBLY LH (See page IP-13)**
29. **REMOVE HOOD LOCK CONTROL LEVER SUB-ASSEMBLY (See page IP-13)**
30. **REMOVE INSTRUMENT PANEL LOWER FINISH PANEL SUB-ASSEMBLY LH (See page IP-14)**
31. **REMOVE INSTRUMENT LOWER PANEL (See page IP-14)**
32. **REMOVE INSTRUMENT CLUSTER LOWER FINISH PANEL (See page IP-14)**
33. **REMOVE COMBINATION METER ASSEMBLY (See page IP-14)**
34. **REMOVE GLOVE COMPARTMENT DOOR ASSEMBLY (See page IP-15)**
35. **REMOVE INSTRUMENT PANEL LOWER FINISH PANEL SUB-ASSEMBLY RH (See page IP-15)**
36. **REMOVE INSTRUMENT PANEL REGISTER ASSEMBLY RH (See page IP-16)**
37. **REMOVE INSTRUMENT PANEL SPEAKER PANEL SUB-ASSEMBLY RH (See page IP-16)**
38. **REMOVE INSTRUMENT PANEL SPEAKER PANEL SUB-ASSEMBLY LH (See page IP-16)**

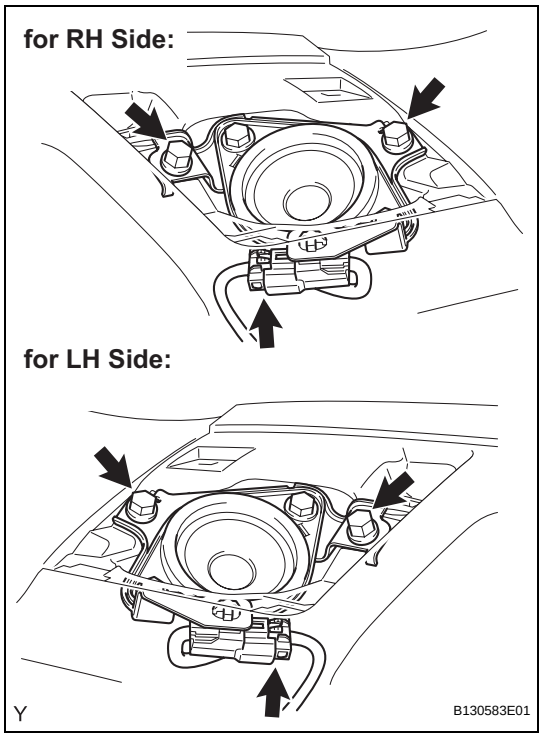

39. REMOVE FRONT NO. 2 SPEAKER ASSEMBLY

HINT:

Use the same procedure for both sides.

(a) Remove the 2 bolts and the front No. 2 speaker.

(b) Disconnect the speaker connector.

40. DISCONNECT PASSENGER AIRBAG CONNECTOR (See page IP-16)

41. REMOVE INSTRUMENT PANEL SUB-ASSEMBLY (See page IP-16)

42. REMOVE INSTRUMENT PANEL FINISH PANEL END (See page IP-21)

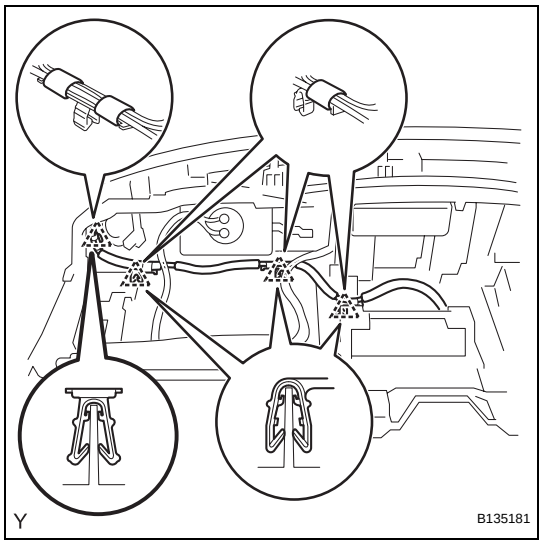

43. REMOVE ANTENNA CORD SUB-ASSEMBLY

(a) Disengage the 4 clamps.

(b) Remove the 3 pieces of tape and the antenna cord.

AV

INSTALLATION

CAUTION:
Some of these service operations affect the SRS airbag system. Read the precautionary notices concerning the SRS airbag system before servicing (See page RS-1).

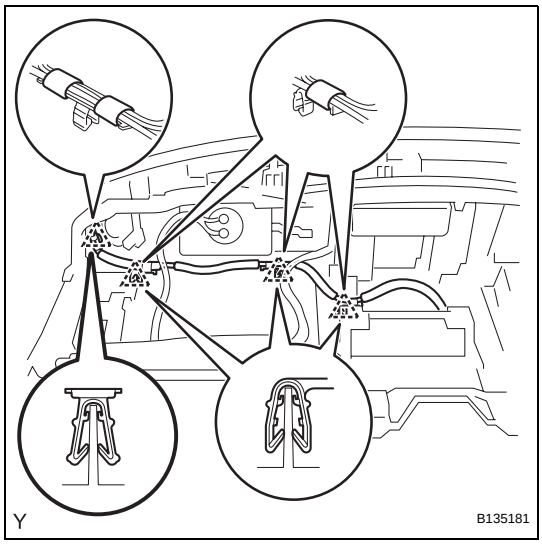

1. **INSTALL ANTENNA CORD SUB-ASSEMBLY**
   (a) Install the antenna cord with 3 new pieces of tape.
   (b) Engage the 4 clamps.
2. **INSTALL INSTRUMENT PANEL SUB-ASSEMBLY (See page IP-26)**
3. **CONNECT PASSENGER AIRBAG CONNECTOR (See page IP-26)**
4. **INSTALL INSTRUMENT PANEL FINISH PANEL END (See page IP-27)**

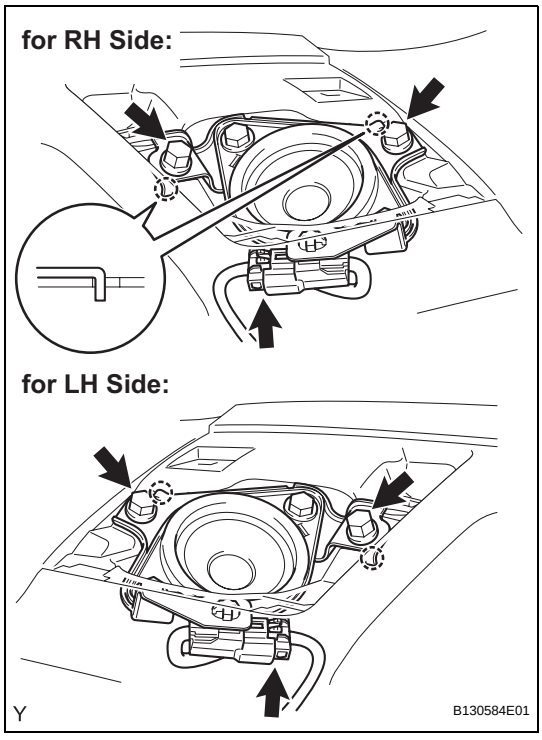

5. **INSTALL FRONT NO. 2 SPEAKER ASSEMBLY**
   HINT:
   Use the same procedure for both sides.
   (a) Connect the speaker connector.
   (b) Insert the 2 hooks into the instrument panel and install the front No. 2 speaker with the 2 bolts.
   Torque: 2.5 N*m (25 kgf*cm, 22 in.*lbf)
6. **INSTALL INSTRUMENT PANEL SPEAKER PANEL SUB-ASSEMBLY RH (See page IP-27)**
7. **INSTALL INSTRUMENT PANEL SPEAKER PANEL SUB-ASSEMBLY LH (See page IP-27)**
8. **INSTALL INSTRUMENT PANEL REGISTER ASSEMBLY RH (See page IP-27)**
9. **INSTALL INSTRUMENT PANEL LOWER FINISH PANEL SUB-ASSEMBLY RH (See page IP-28)**
10. **INSTALL GLOVE COMPARTMENT DOOR ASSEMBLY (See page IP-28)**
11. **INSTALL COMBINATION METER ASSEMBLY (See page IP-28)**
12. **INSTALL INSTRUMENT CLUSTER LOWER FINISH PANEL (See page IP-29)**
13. **INSTALL INSTRUMENT LOWER PANEL (See page IP-29)**
14. **INSTALL INSTRUMENT PANEL LOWER FINISH PANEL SUB-ASSEMBLY LH (See page IP-29)**
15. **INSTALL HOOD LOCK CONTROL LEVER SUB-ASSEMBLY (See page IP-30)**

AV

16. INSTALL INSTRUMENT PANEL REGISTER ASSEMBLY LH (See page IP-30)
17. INSTALL INSTRUMENT LOWER COVER SUB-ASSEMBLY (See page IP-30)
18. INSTALL FRONT CONSOLE BOX UPPER PANEL GARNISH (See page IP-31)
19. INSTALL FRONT CONSOLE BOX (See page IP-31)
20. INSTALL FRONT CONSOLE BOX BOTTOM MAT (See page IP-31)
21. INSTALL FRONT CONSOLE BOX UPPER PANEL SUB-ASSEMBLY (See page IP-31)
22. INSTALL SHIFT LEVER KNOB SUB-ASSEMBLY (for 4WD) (See page IP-32)
23. INSTALL SHIFT LEVER KNOB SUB-ASSEMBLY (for Manual Transmission) (See page IP-32)
24. INSTALL PARKING BRAKE HOLE COVER SUB-ASSEMBLY (See page IP-32)
25. INSTALL RADIO RECEIVER ASSEMBLY (See page AV-56)
26. INSTALL INTEGRATION CONTROL PANEL ASSEMBLY (See page IP-32)
27. INSTALL INSTRUMENT PANEL GARNISH LH (See page IP-33)
28. INSTALL INSTRUMENT PANEL GARNISH RH (See page IR-43)
29. INSTALL ASSIST GRIP RETAINER RH (See page IP-27)
30. INSTALL ASSIST GRIP RETAINER LH (See page IP-27)
31. INSTALL FRONT PILLAR GARNISH RH (See page IR-43)
32. INSTALL FRONT PILLAR GARNISH LH (See page IR-43)

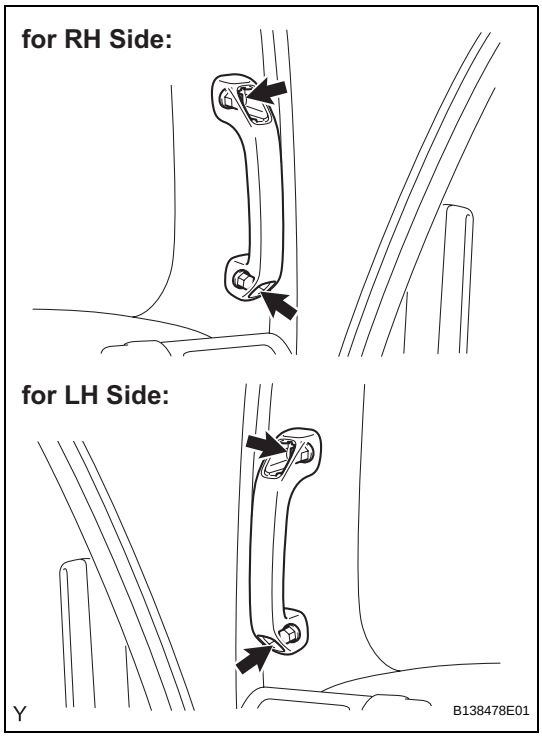

33. INSTALL ASSIST GRIP ASSEMBLY

HINT:

Use the same procedure to install all the assist grips.

(a) Install the assist grip with the 2 screws.

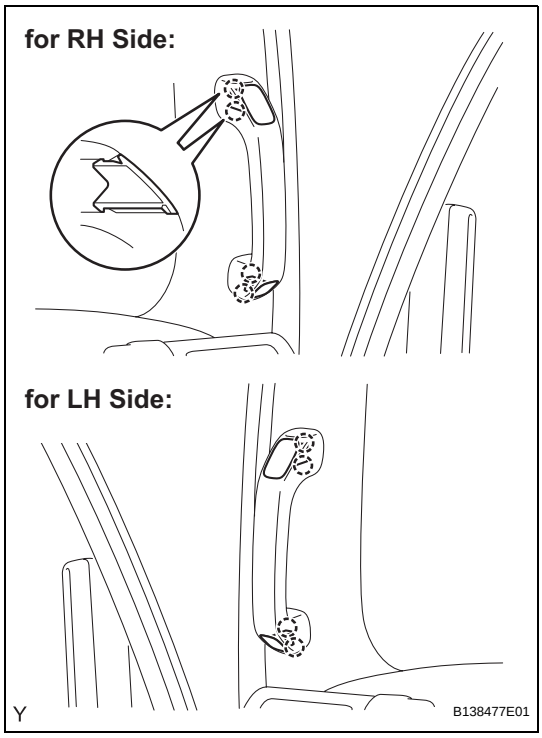

34. INSTALL ASSIST GRIP PLUG

HINT:

Use the same procedure to install all the assist grip plugs.

(a) Engage the 2 claws and install the assist grip plug.

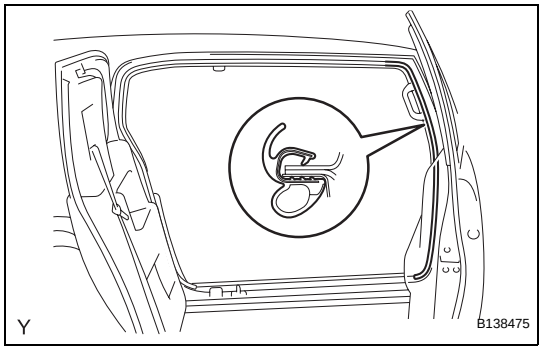

35. INSTALL FRONT DOOR OPENING TRIM WEATHERSTRIP RH

(a) Install the front door opening trim weatherstrip.

36. INSTALL FRONT DOOR OPENING TRIM WEATHERSTRIP LH

HINT:

Use the same procedure as for the RH side.

37. INSTALL COWL SIDE TRIM BOARD RH (See page IR-45)

38. **INSTALL COWL SIDE TRIM BOARD LH (See page IR-45)**
39. **INSTALL FOOTREST CLIP (See page IR-2)**
40. **INSTALL FRONT FLOOR FOOTREST (See page IR-2)**
41. **INSTALL FRONT DOOR SCUFF PLATE RH (See page IR-45)**
42. **INSTALL FRONT DOOR SCUFF PLATE LH (See page IR-45)**
43. **CONNECT CABLE TO NEGATIVE BATTERY TERMINAL**
    Torque: 3.9 N*m (40 kgf*cm, 35 in.*lbf)
44. **INSPECT SRS WARNING LIGHT**
    (See page RS-29)

RADIO ANTENNA HOLDER

COMPONENTS

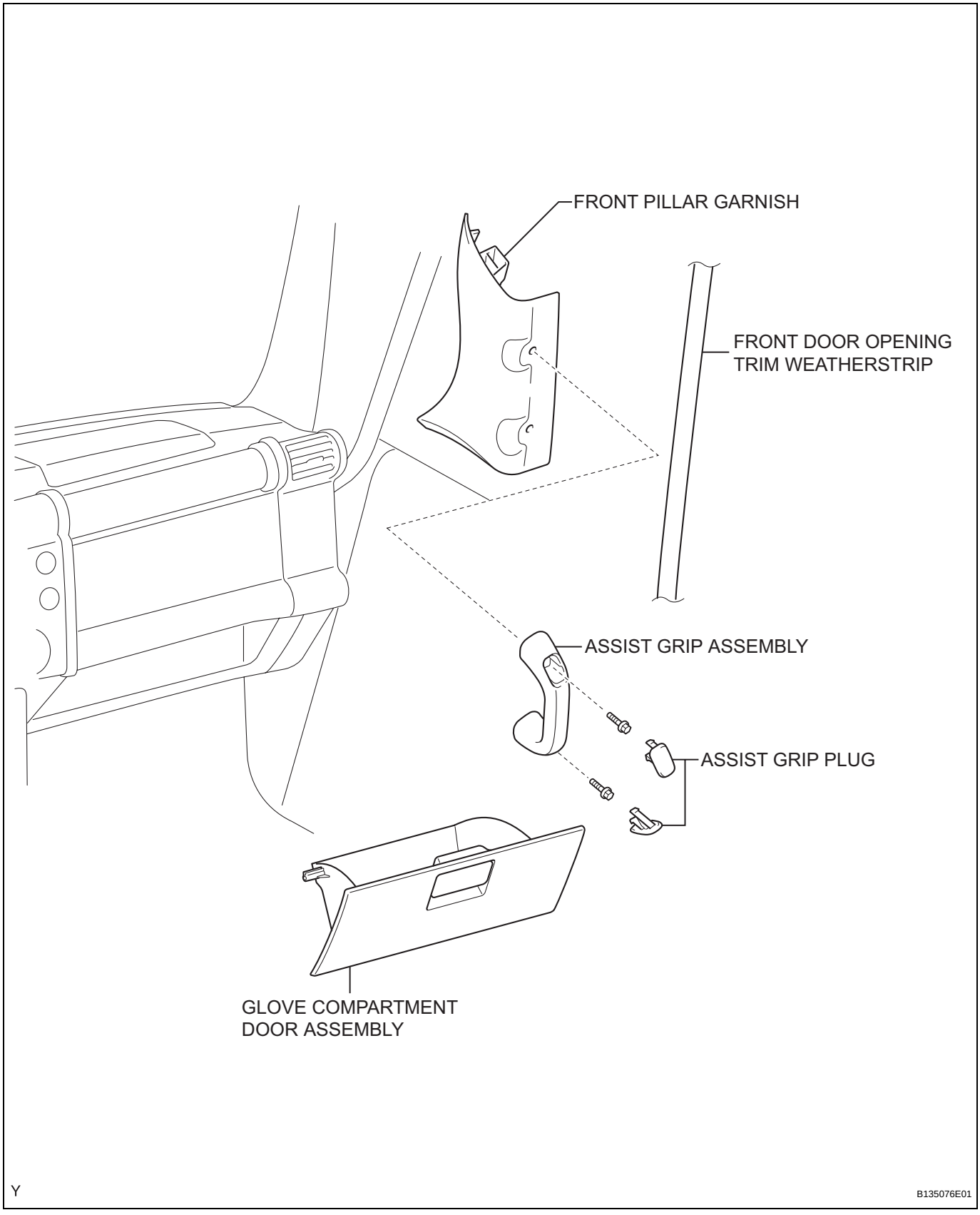

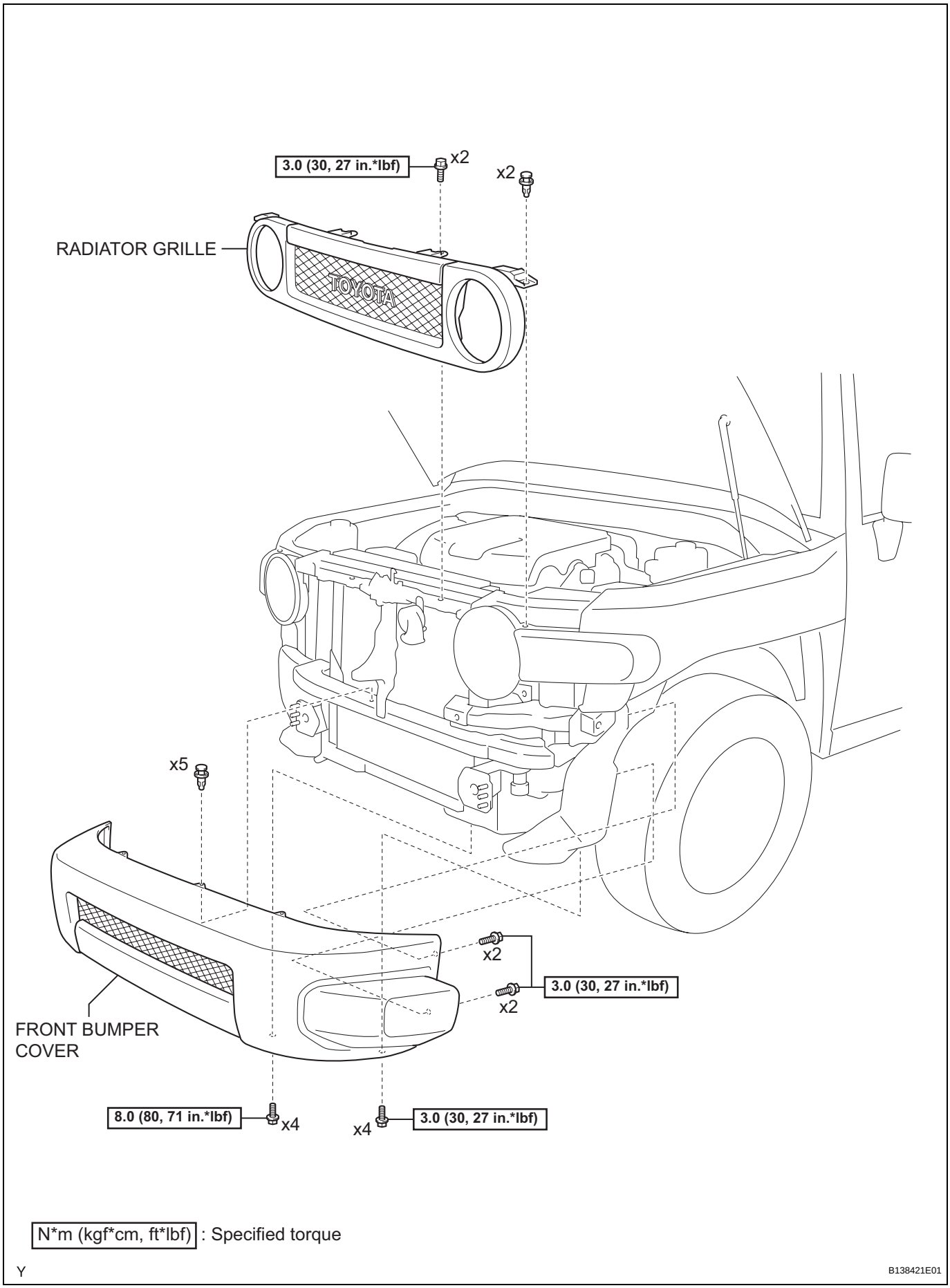

N*m (kgf*cm, ft*lbf) : Specified torque

Y

B138421E01

AV

w/ Side Step:

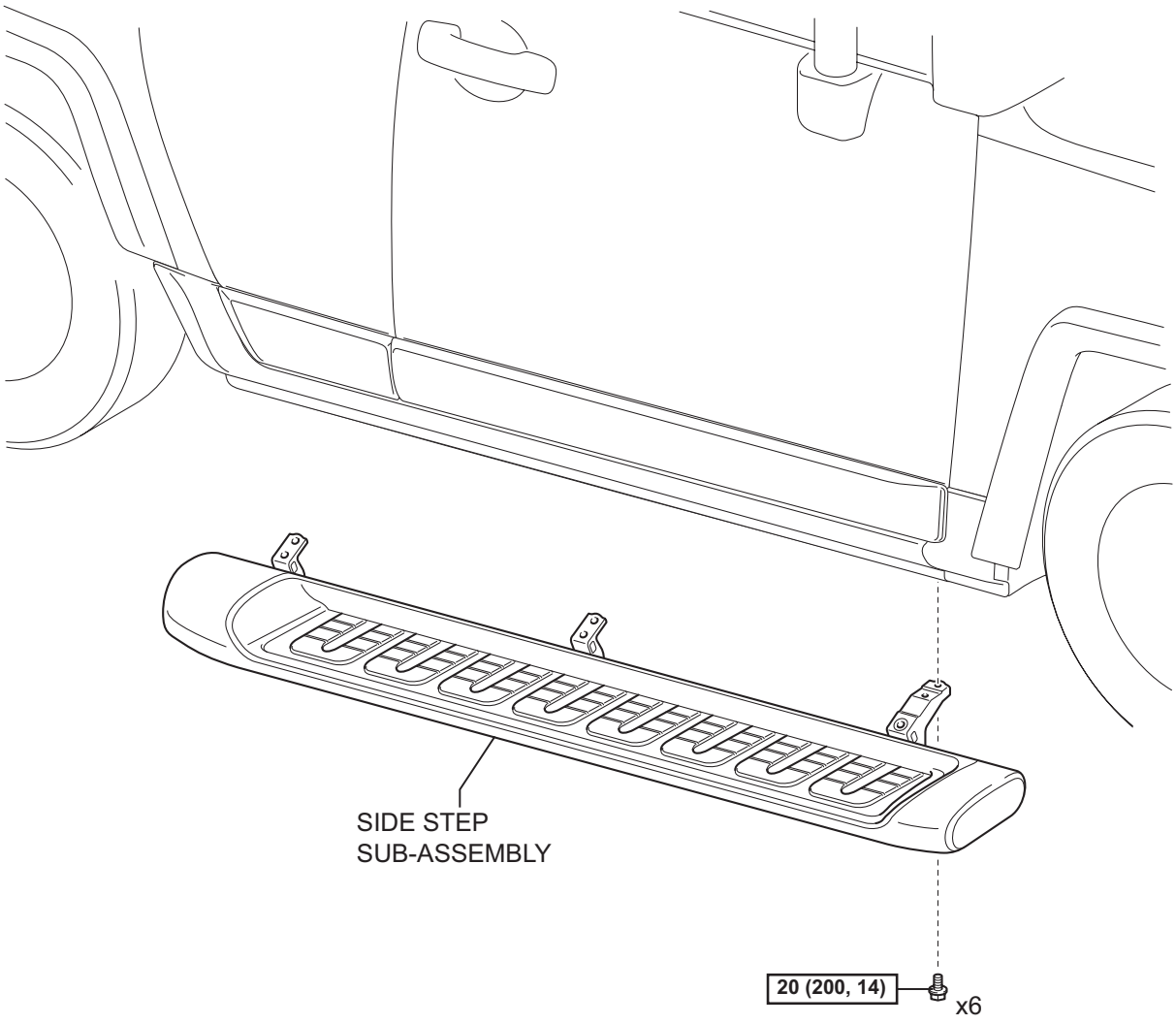

N*m (kgf*cm, ft*lbf) : Specified torque

Y

B138495E01

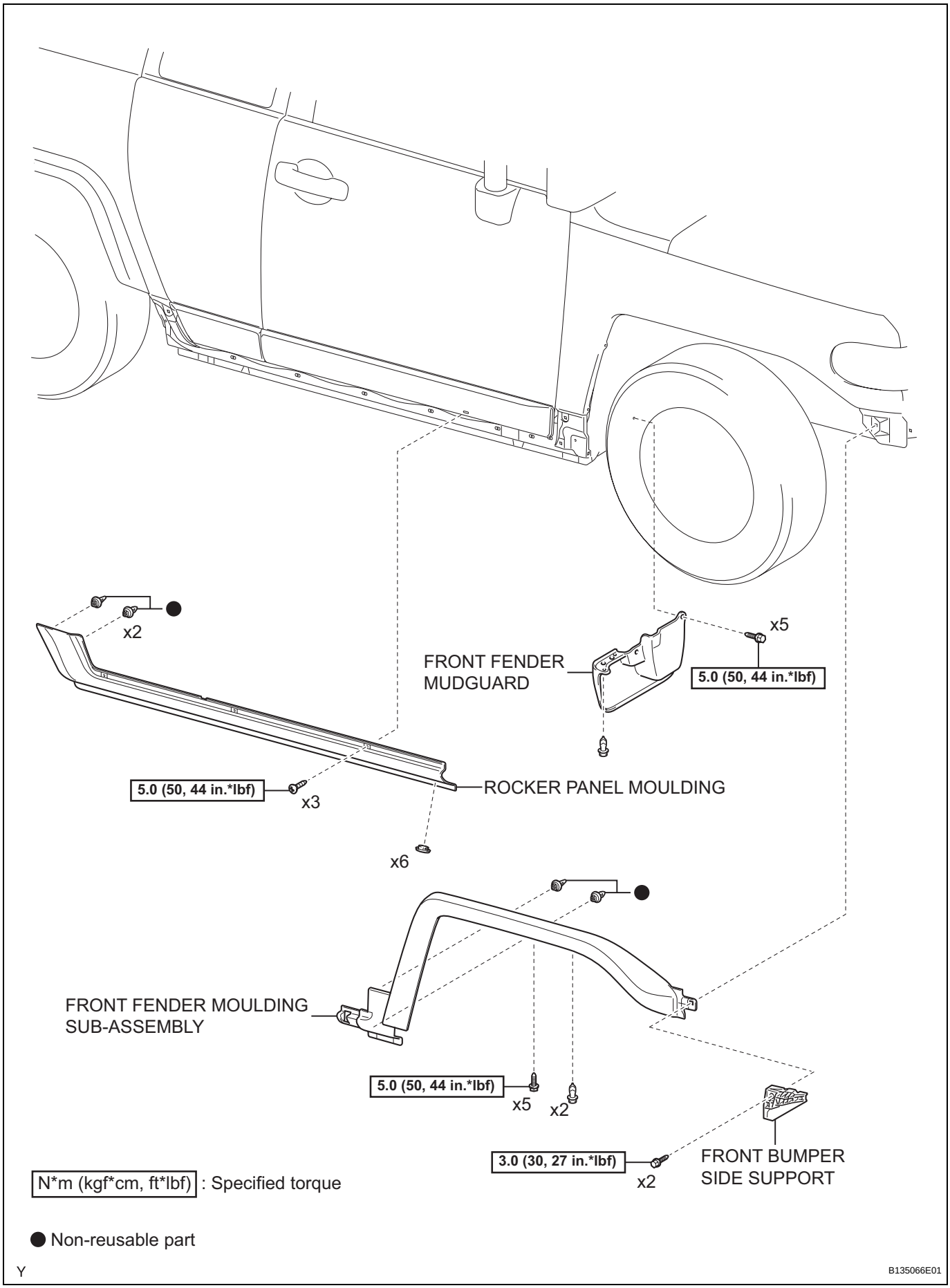

AV

Y

B135066E01

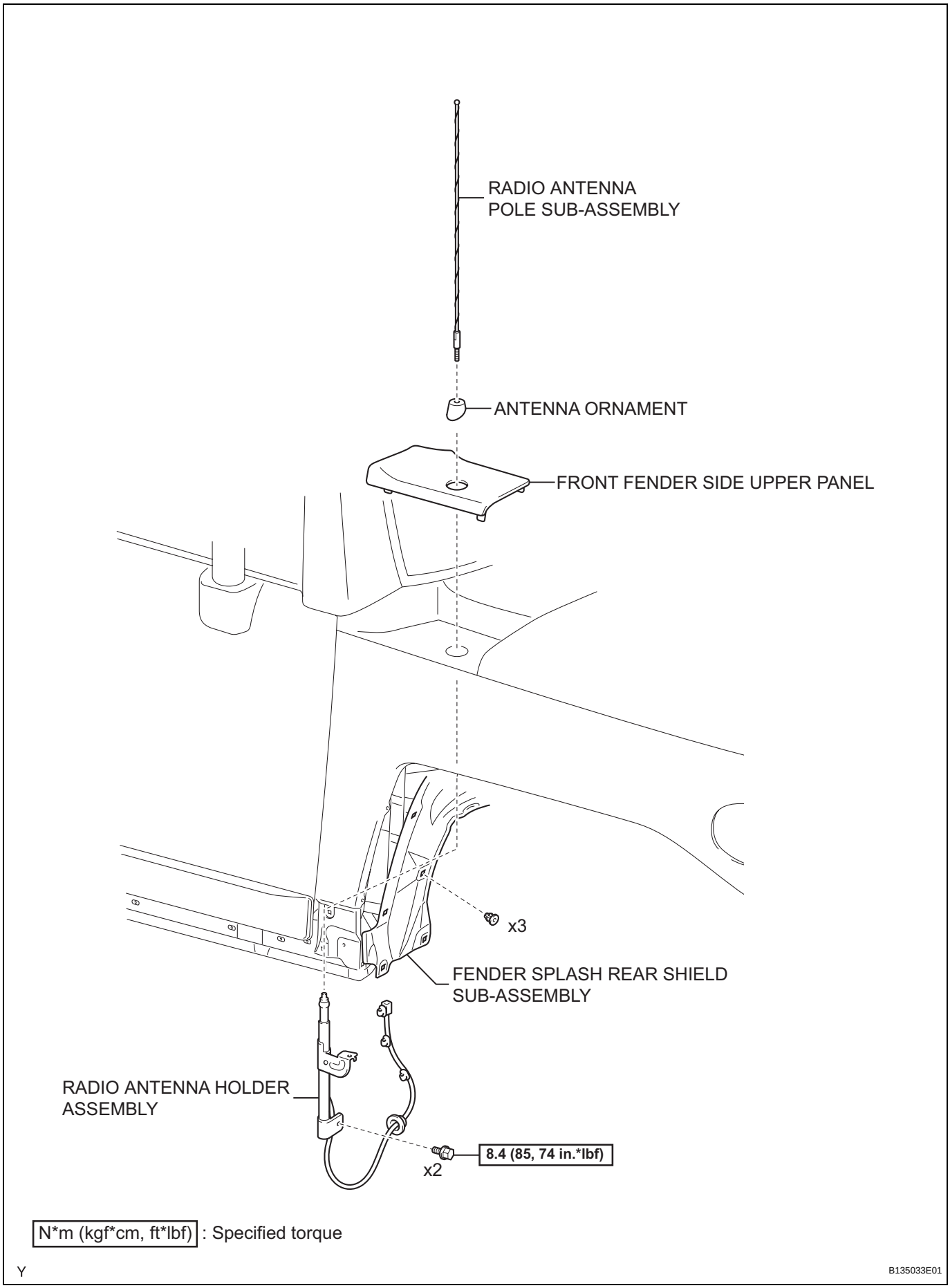

N*m (kgf*cm, ft*lbf) : Specified torque

Y

B135033E01

AV

REMOVAL

1. **DISCONNECT CABLE FROM NEGATIVE BATTERY TERMINAL**
2. **REMOVE GLOVE COMPARTMENT DOOR ASSEMBLY (See page IP-15)**
3. **REMOVE FRONT DOOR OPENING TRIM WEATHERSTRIP**
   (a) Remove the front door opening trim weatherstrip to the extent that the front pillar garnish can be removed.

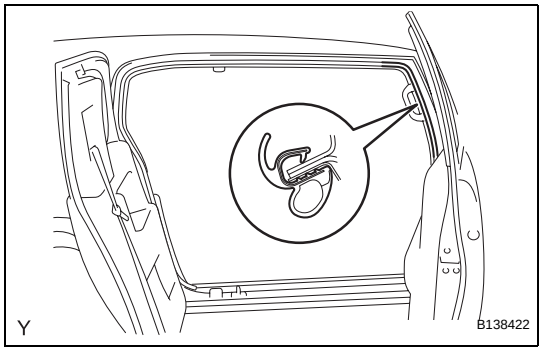

4. **REMOVE ASSIST GRIP PLUG**
   HINT:
   Use the same procedure for both sides.
   (a) Using a screwdriver with its tip wrapped in protective tape, disengage the 2 claws and remove the assist grip plug.

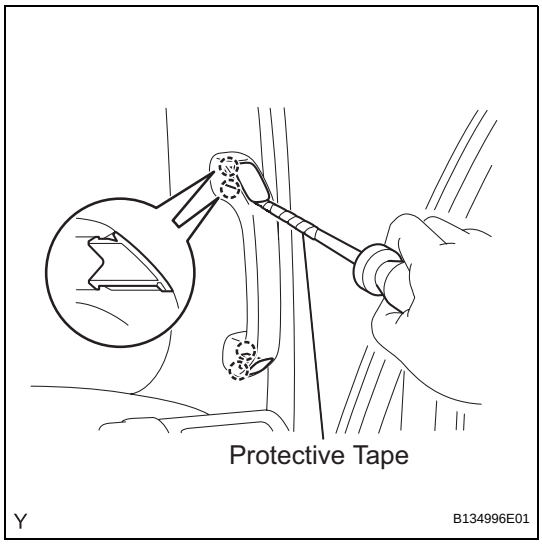

5. **REMOVE ASSIST GRIP ASSEMBLY**
   (a) Remove the 2 screws and the assist grip.
6. **REMOVE FRONT PILLAR GARNISH (See page IR-18)**
7. **REMOVE RADIATOR GRILLE (See page ET-4)**
8. **REMOVE FRONT BUMPER COVER (See page ET-65)**
9. **REMOVE SIDE STEP SUB-ASSEMBLY (w/ Side Step)**
   HINT:
   Use the same procedure as for the LH side (See page ET-86).
10. **REMOVE ROCKER PANEL MOULDING**
    HINT:
    Use the same procedure as for the LH side (See page ET-66).
11. **REMOVE FRONT FENDER MUDGUARD**
    HINT:
    Use the same procedure as for the LH side (See page ET-83).

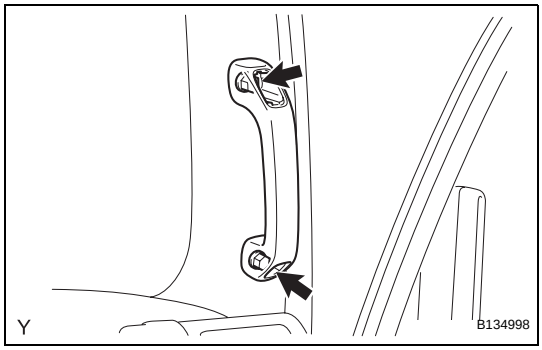

AV

12. REMOVE FRONT BUMPER SIDE SUPPORT

HINT:

Use the same procedure as for the LH side (See page ET-5).

13. REMOVE FRONT FENDER MOULDING SUB-ASSEMBLY

HINT:

Use the same procedure as for the LH side (See page ET-67).

14. REMOVE RADIO ANTENNA POLE SUB-ASSEMBLY (See page AV-116)

15. REMOVE ANTENNA ORNAMENT (See page WW-26)

16. REMOVE FRONT FENDER SIDE UPPER PANEL (See page WW-26)

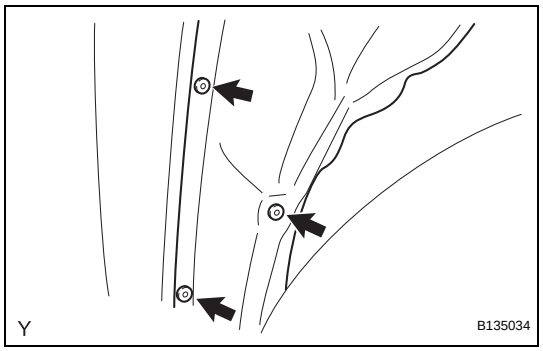

17. REMOVE FENDER SPLASH REAR SHIELD SUB-ASSEMBLY

(a) Remove the 3 clips and the fender splash rear shield to extent that the radio antenna holder can be removed.

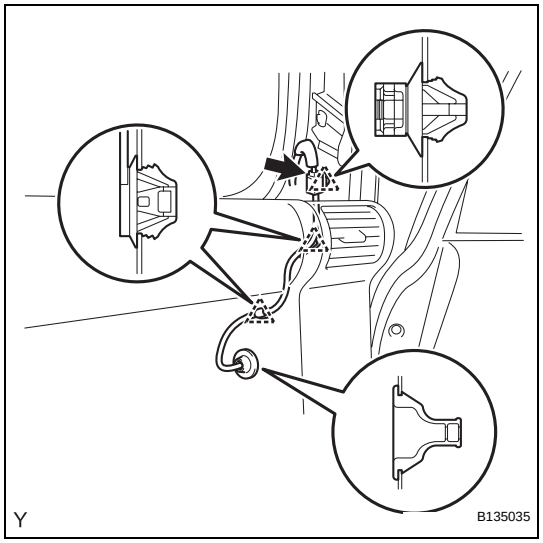

18. REMOVE RADIO ANTENNA HOLDER ASSEMBLY

(a) Disconnect the connector.

(b) Using a clip remover, remove the 2 clamps and the connector.

(c) Remove the grommet and insert the feeder line through the body hole.

AV

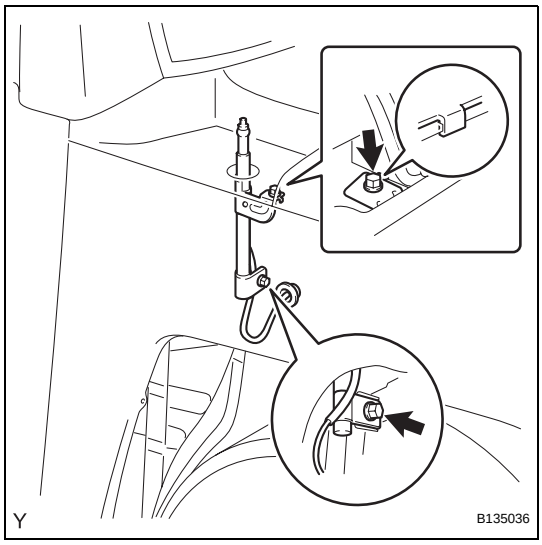

(d) Remove the 2 bolts, the hook and the radio antenna holder.

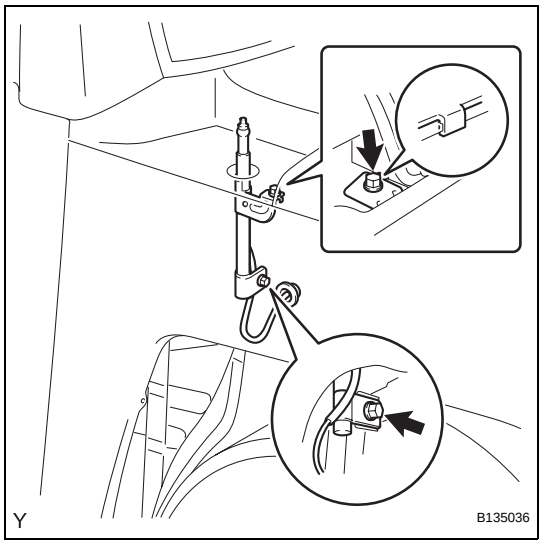

INSTALLATION

1. INSTALL RADIO ANTENNA HOLDER ASSEMBLY

(a) Hook the body side bracket onto the hook of the radio antenna holder and provisionally install the radio antenna holder.

(b) Insert the feeder line through the body hole and install the grommet.

(c) Tighten bolt A and then bolt B.
Torque: 8.4 N*m (85 kgf*cm, 74 in.*lbf)

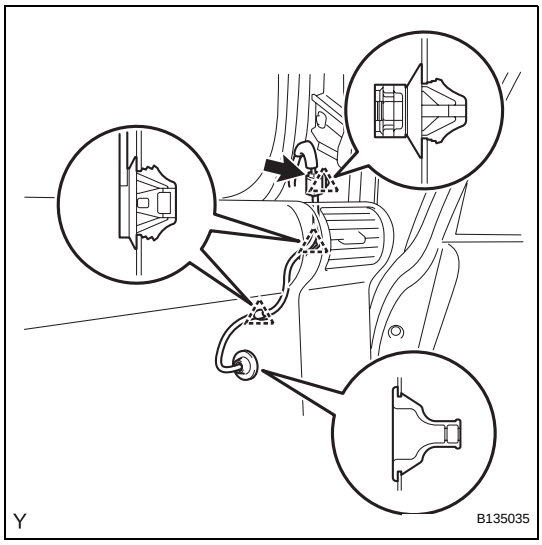

(d) Install the 2 clamps and the connector.

(e) Connect the connector.

AV

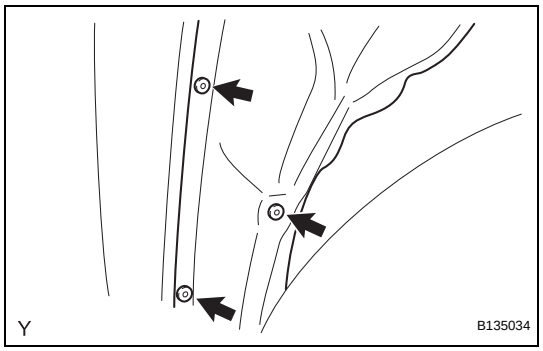

2. **INSTALL FENDER SPLASH REAR SHIELD SUB-ASSEMBLY**
   (a) Install the fender splash rear shield with the 3 clips.
3. **INSTALL FRONT FENDER SIDE UPPER PANEL (See page WW-31)**
4. **INSTALL ANTENNA ORNAMENT (See page WW-31)**
5. **INSTALL RADIO ANTENNA POLE SUB-ASSEMBLY (See page AV-116)**
6. **INSTALL FRONT FENDER MOULDING SUB-ASSEMBLY**
   HINT:
   Use the same procedure as for the LH side (See page ET-77).
7. **INSTALL FRONT BUMPER SIDE SUPPORT**
   HINT:
   Use the same procedure as for the LH side (See page ET-9).
8. **INSTALL FRONT FENDER MUDGUARD**
   HINT:
   Use the same procedure as for the LH side (See page ET-84).
9. **INSTALL ROCKER PANEL MOULDING**
   HINT:
   Use the same procedure as for the LH side (See page ET-78).
10. **INSTALL SIDE STEP SUB-ASSEMBLY (w/ Side Step)**
    HINT:
    Use the same procedure as for the LH side (See page ET-87).
11. **INSTALL FRONT BUMPER COVER (See page ET-79)**
12. **INSTALL RADIATOR GRILLE (See page ET-11)**
13. **INSTALL FRONT PILLAR GARNISH (See page IR-43)**
14. **INSTALL ASSIST GRIP ASSEMBLY**
    (a) Install the assist grip with the 2 screws.

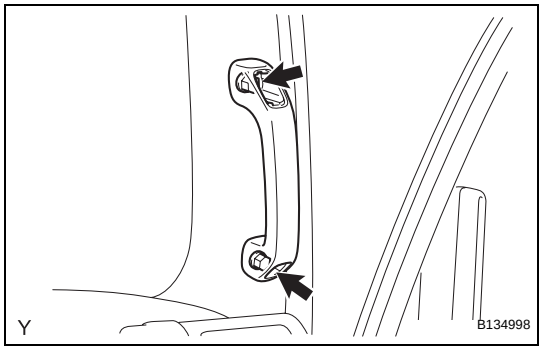

AV

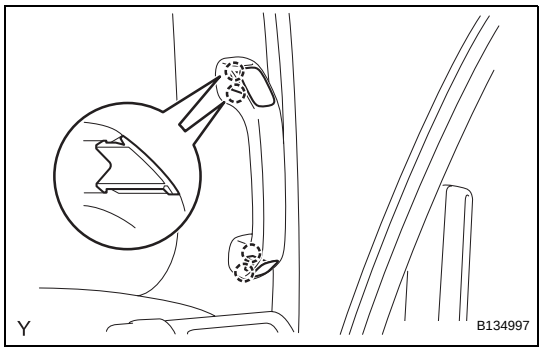

15. INSTALL ASSIST GRIP PLUG

HINT:

Use the same procedure for both sides.

(a) Engage the 2 claws and install the assist grip plug.

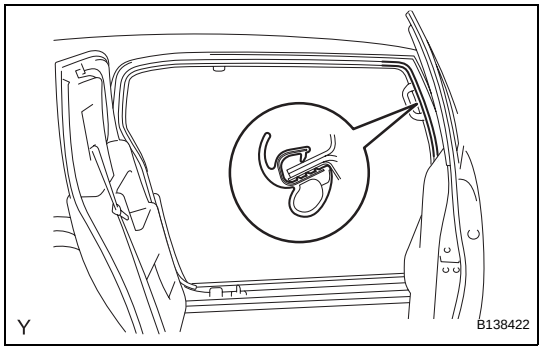

16. INSTALL FRONT DOOR OPENING TRIM WEATHERSTRIP

(a) Install the front door opening trim weatherstrip.

17. INSTALL GLOVE COMPARTMENT DOOR ASSEMBLY (See page IP-28)

18. CONNECT CABLE TO NEGATIVE BATTERY TERMINAL

Torque: 3.9 N*m (40 kgf*cm, 35 in.*lbf)

RADIO ANTENNA POLE

COMPONENTS

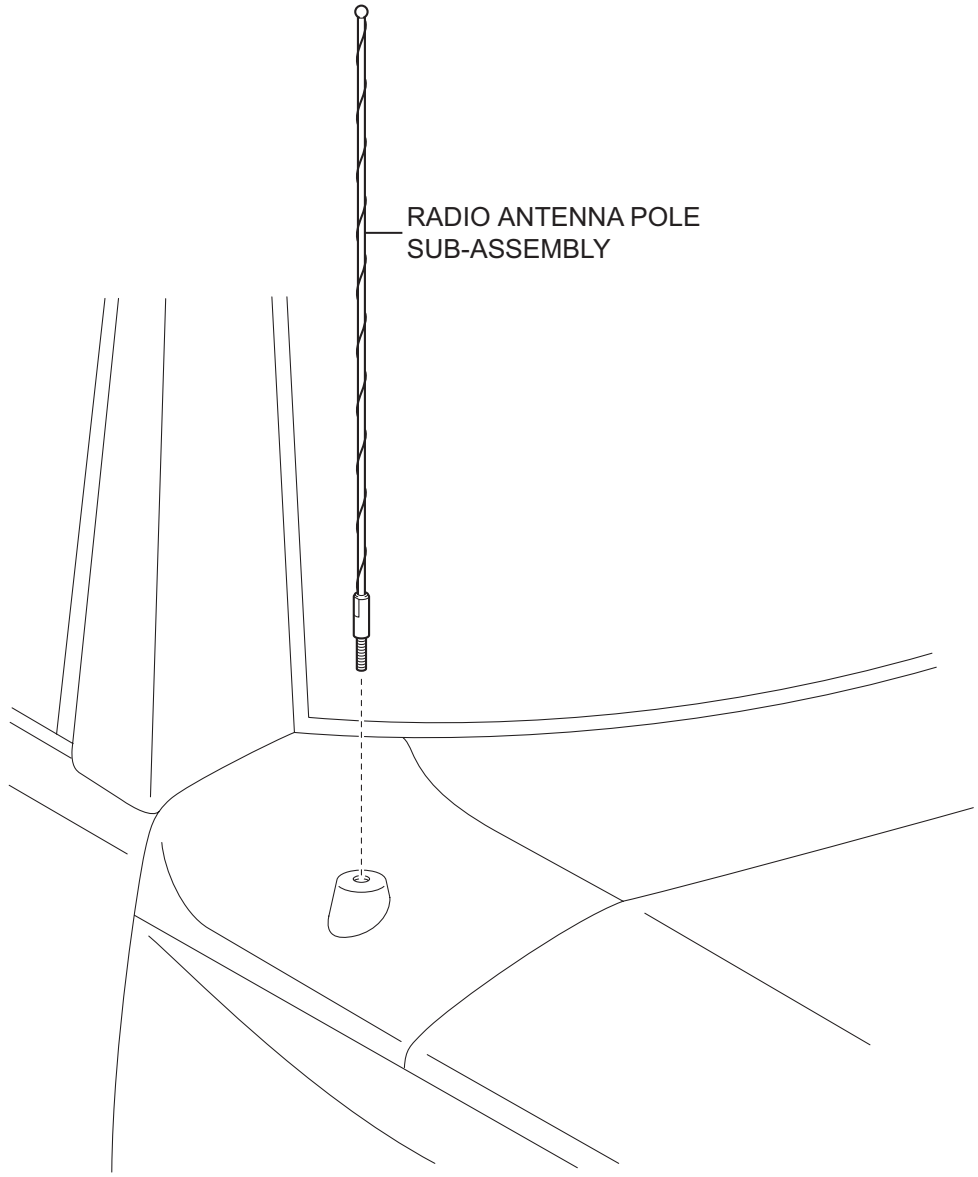

Y

B135010E01

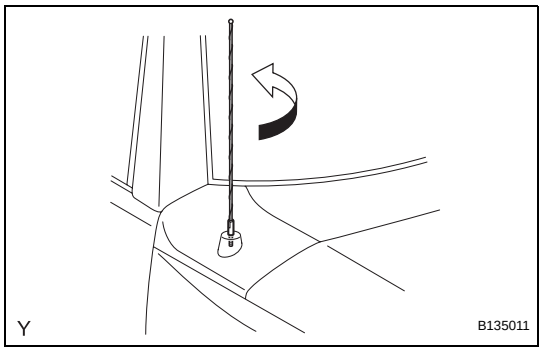

REMOVAL

1. REMOVE RADIO ANTENNA POLE SUB-ASSEMBLY

(a) Remove the radio antenna pole by turning it in the direction of the arrow shown in the illustration.

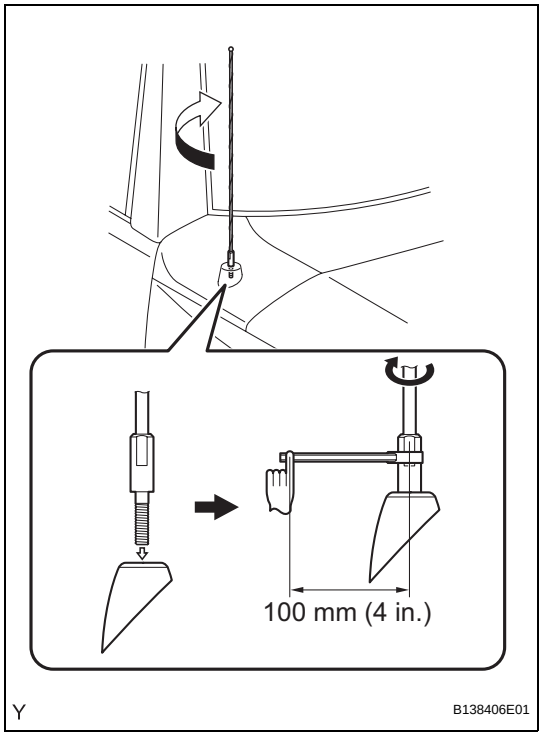

INSTALLATION

1. INSTALL RADIO ANTENNA POLE SUB-ASSEMBLY

(a) Install the radio antenna pole by turning it in the direction of the arrow shown in the illustration.
Torque: 3.3 N*m (35 kgf*cm, 29 in.*lbf)
NOTICE:
Use a short wrench, tighten with your finger, not your hand.

STEREO JACK ADAPTER ASSEMBLY

COMPONENTS

for Automatic Transmission 4WD:

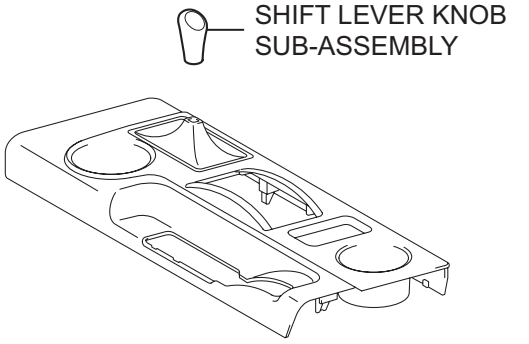

for Manual Transmission:

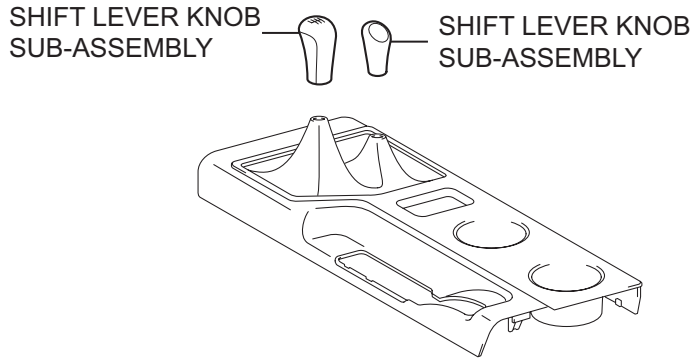

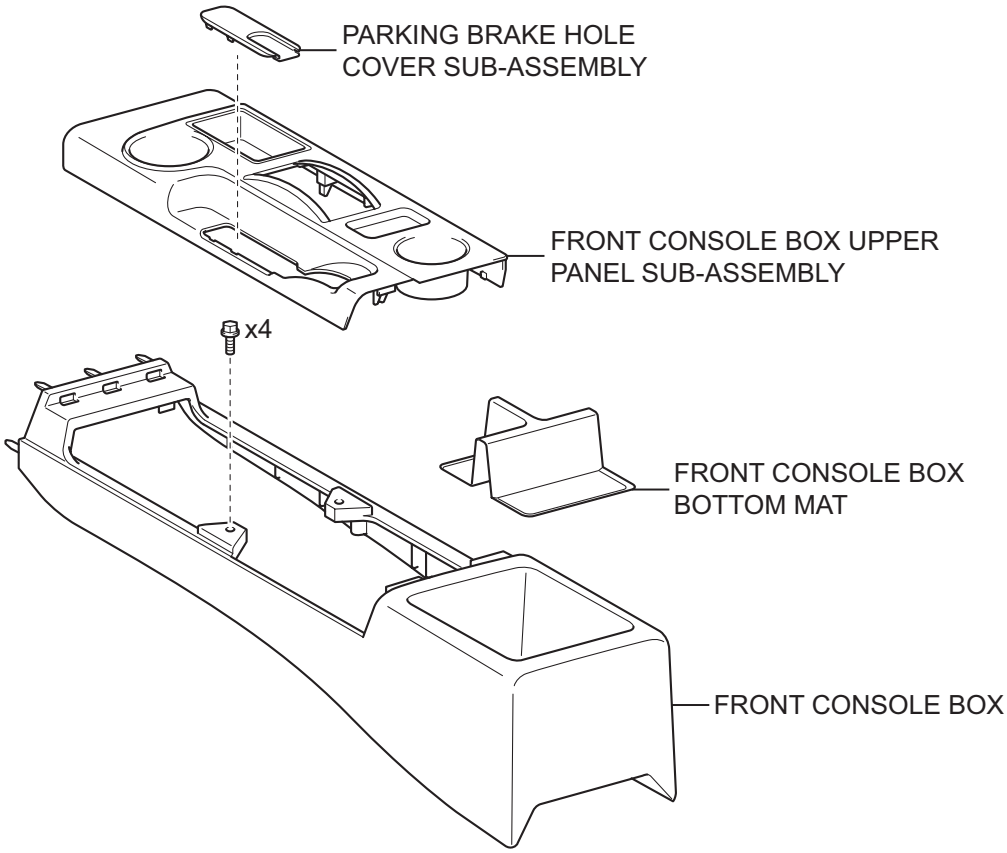

Y

B135184E01

AV

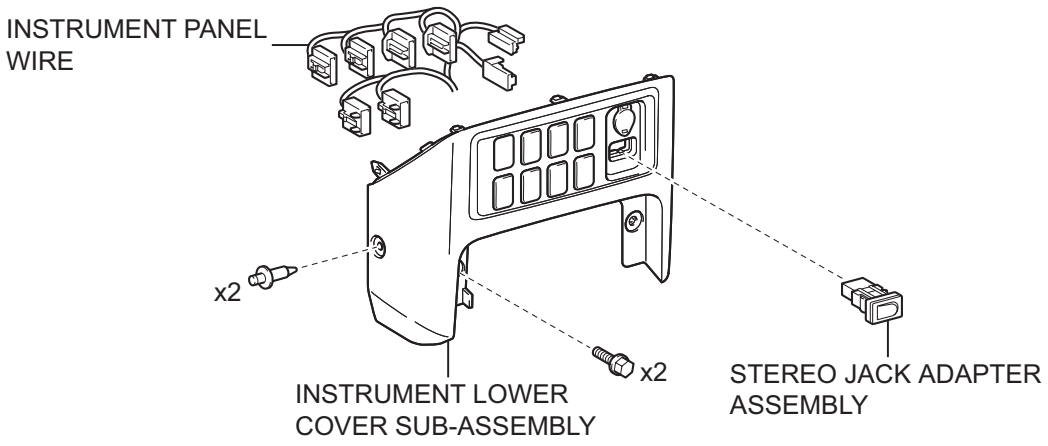

AV

Y

B135182E01

REMOVAL

1. **DISCONNECT CABLE FROM NEGATIVE BATTERY TERMINAL**
2. **REMOVE SHIFT LEVER KNOB SUB-ASSEMBLY (for Manual Transmission) (See page IP-11)**
3. **REMOVE SHIFT LEVER KNOB SUB-ASSEMBLY (for 4WD) (See page IP-11)**
4. **REMOVE PARKING BRAKE HOLE COVER SUB-ASSEMBLY (See page IP-11)**
5. **REMOVE FRONT CONSOLE BOX UPPER PANEL SUB-ASSEMBLY (See page IP-12)**
6. **REMOVE FRONT CONSOLE BOX BOTTOM MAT (See page IP-12)**
7. **REMOVE FRONT CONSOLE BOX (See page IP-12)**
8. **REMOVE INSTRUMENT LOWER COVER SUB-ASSEMBLY (See page IP-13)**
9. **REMOVE STEREO JACK ADAPTER ASSEMBLY**
   (a) Disengage the 2 claws and remove the stereo jack adapter.

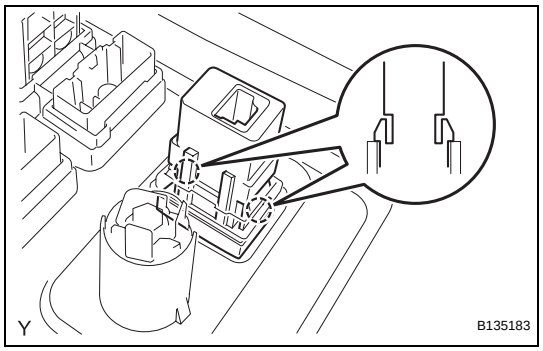

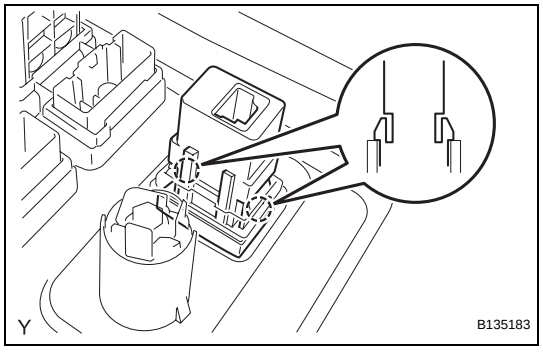

INSTALLATION

1. **INSTALL STEREO JACK ADAPTER ASSEMBLY**
   (a) Engage the 2 claws and install the stereo jack adapter.
2. **INSTALL INSTRUMENT LOWER COVER SUB-ASSEMBLY (See page IP-30)**
3. **INSTALL FRONT CONSOLE BOX (See page IP-31)**
4. **INSTALL FRONT CONSOLE BOX BOTTOM MAT (See page IP-31)**
5. **INSTALL FRONT CONSOLE BOX UPPER PANEL SUB-ASSEMBLY (See page IP-31)**
6. **INSTALL PARKING BRAKE HOLE COVER SUB-ASSEMBLY (See page IP-32)**
7. **INSTALL SHIFT LEVER KNOB SUB-ASSEMBLY (for 4WD) (See page IP-32)**
8. **INSTALL SHIFT LEVER KNOB SUB-ASSEMBLY (for Manual Transmission) (See page IP-32)**

9. CONNECT CABLE TO NEGATIVE BATTERY TERMINAL
Torque: 3.9 N*m (40 kgf*cm, 35 in.*lbf)

STEERING PAD SWITCH

COMPONENTS

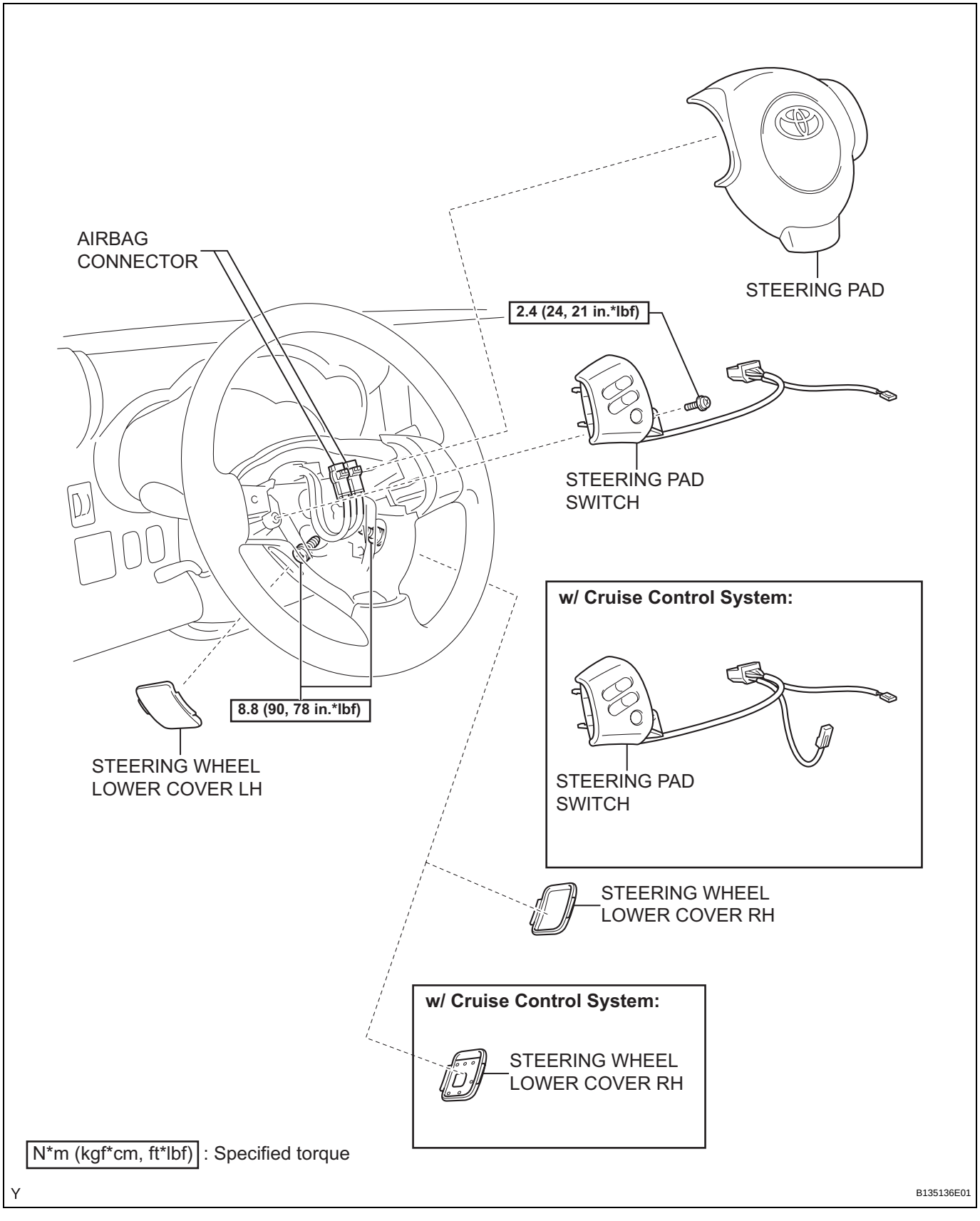

AV

REMOVAL

CAUTION:
Some of these service operations affect the SRS airbag system. Read the precautionary notices concerning the SRS airbag system before servicing (See page RS-1).

1. **DISCONNECT CABLE FROM NEGATIVE BATTERY TERMINAL**
   CAUTION:
   Wait for at least 90 seconds after disconnecting the cable to prevent the airbag from working.
2. **REMOVE STEERING WHEEL LOWER COVER LH (See page RS-345)**
3. **REMOVE STEERING WHEEL LOWER COVER RH (See page RS-345)**
4. **REMOVE STEERING PAD (See page RS-346)**
5. **REMOVE STEERING PAD SWITCH**
   (a) w/ Cruise Control System:
   (1) Disconnect the cruise control switch connector.
   (b) Disconnect the connector.
   (c) Remove the screw.
   (d) Disengage the 2 claws and the pin and remove the steering pad switch.

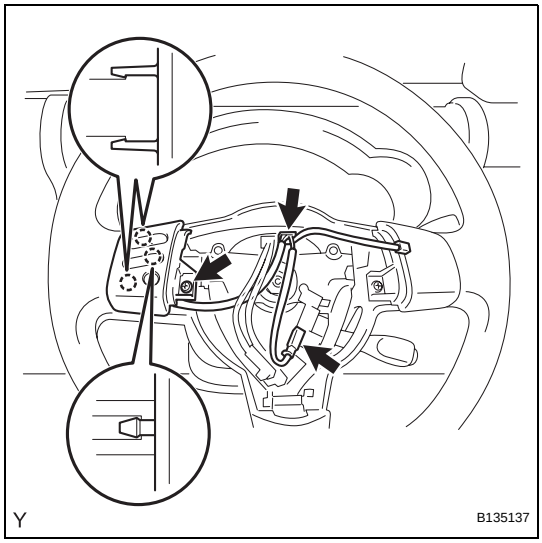

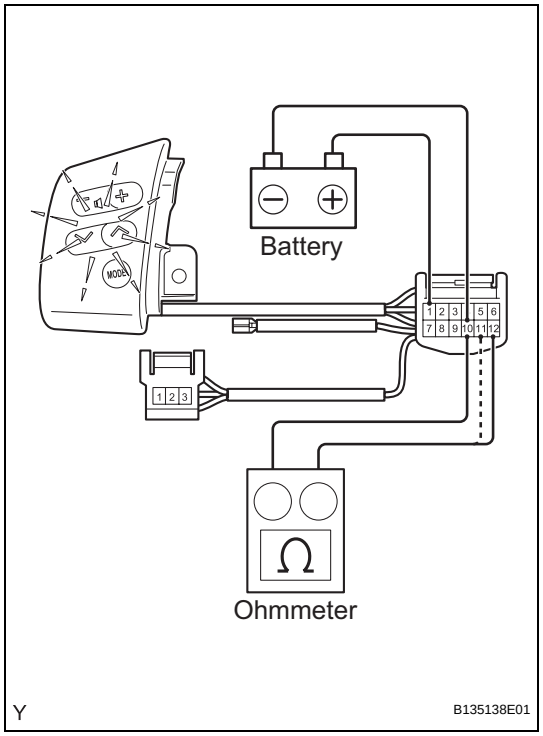

INSPECTION

1. INSPECT STEERING PAD SWITCH

(a) Check the resistance.

(1) Using an ohmmeter, measure the resistance between the terminals.

Standard resistance

Tester Connection	Condition	Specified Condition
12 (AU1) - 10 (EAU)	All switches released	Approximately 100 kΩ
	SEEK+ switch: pushed in	2.5 Ω or less
	SEEK- switch: pushed in	Approximately 329 Ω
	VOL+ switch: pushed in	Approximately 1000 Ω
	VOL-+ switch: pushed in	Approximately 3110 Ω
11 (AU2) - 10 (EAU)	All switches released	Approximately 100 kΩ
	MODE switch: push in	2.5 Ω or less

If the result is not as specified, replace the steering pad switch.

(b) Check the operation.

(1) Apply battery voltage to the terminals and check that the indicator illuminates.

Standard

Condition	Standard
Positive battery - Terminal 1 (IL+2) Negative battery - Terminal 10 (EAU)	Illuminates

If the result is not as specified, replace the steering switch.

INSTALLATION

CAUTION:
Some of these service operations affect the SRS airbag system. Read the precautionary notices concerning the SRS airbag system before servicing (See page RS-1).

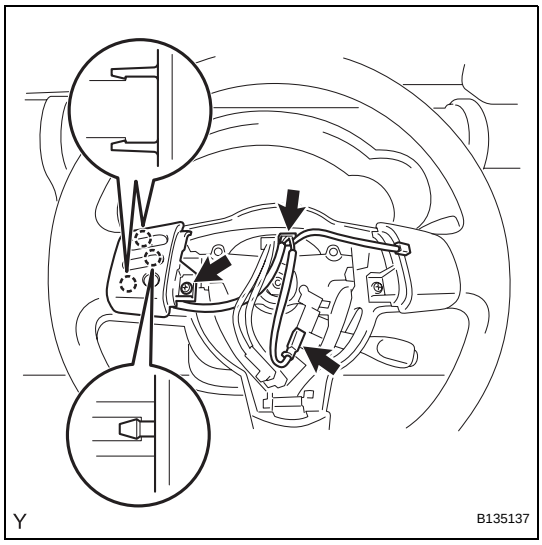

1. **INSTALL STEERING PAD SWITCH**
   (a) Engage the 2 claws and the pin and install the steering pad.
   (b) Tighten the screw.
   Torque: 2.4 N*m (24 kgf*cm, 21 in.*lbf)
   (c) Connect the connector.
   (d) w/ Cruise Control System:
   (1) Connect the cruise control switch connector.
2. **INSTALL STEERING PAD (See page RS-346)**
3. **INSTALL STEERING WHEEL LOWER COVER LH (See page RS-347)**
4. **INSTALL STEERING WHEEL LOWER COVER RH (See page RS-347)**
5. **CONNECT CABLE TO NEGATIVE BATTERY TERMINAL**
   Torque: 3.9 N*m (40 kgf*cm, 35 in.*lbf)
6. **INSPECT SRS WARNING LIGHT**
   (See page RS-29)

WOOFER SPEAKER SWITCH

COMPONENTS

for Automatic Transmission 4WD:

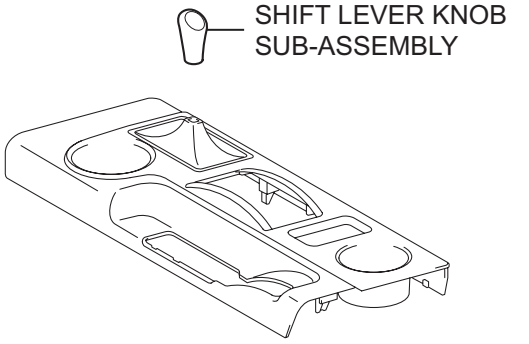

for Manual Transmission:

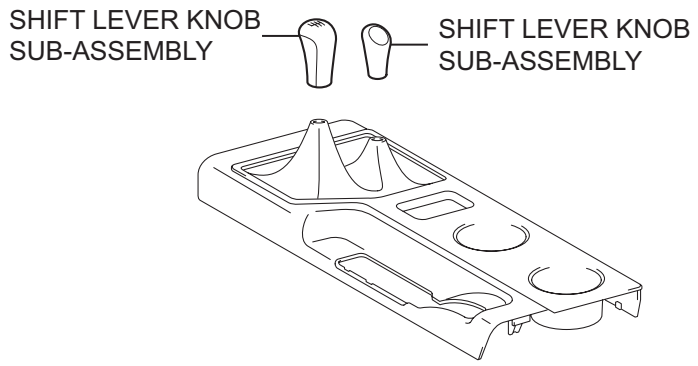

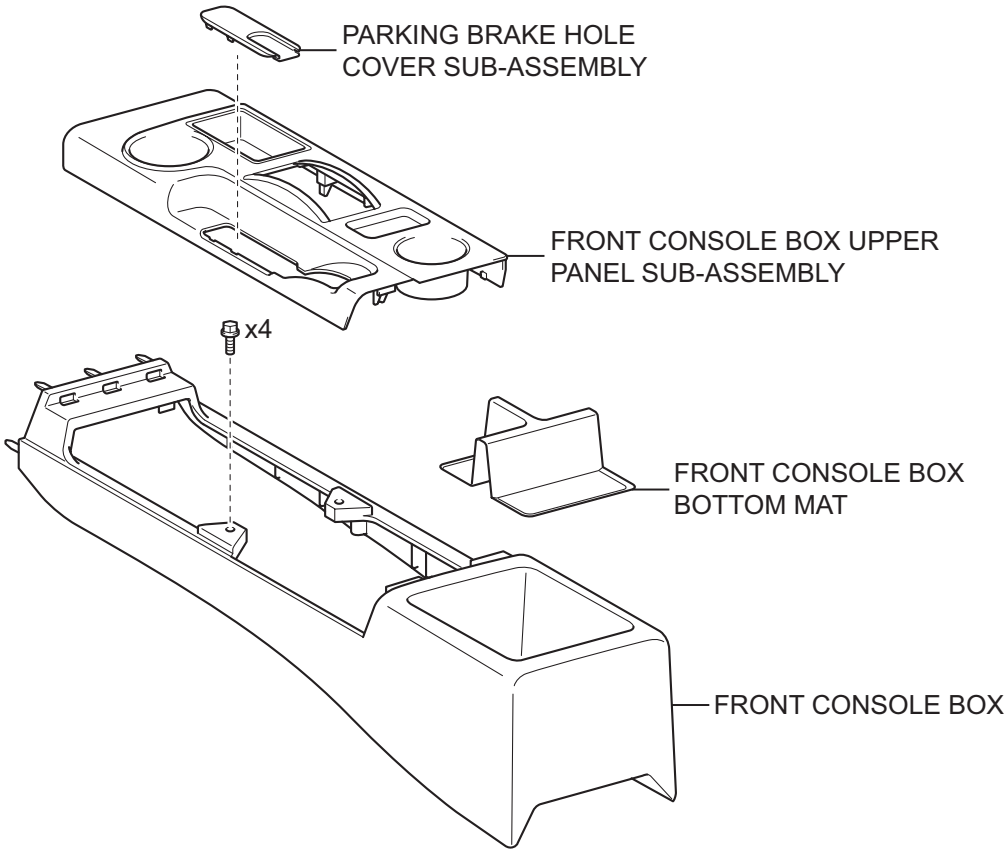

Y

B135184E01

AV

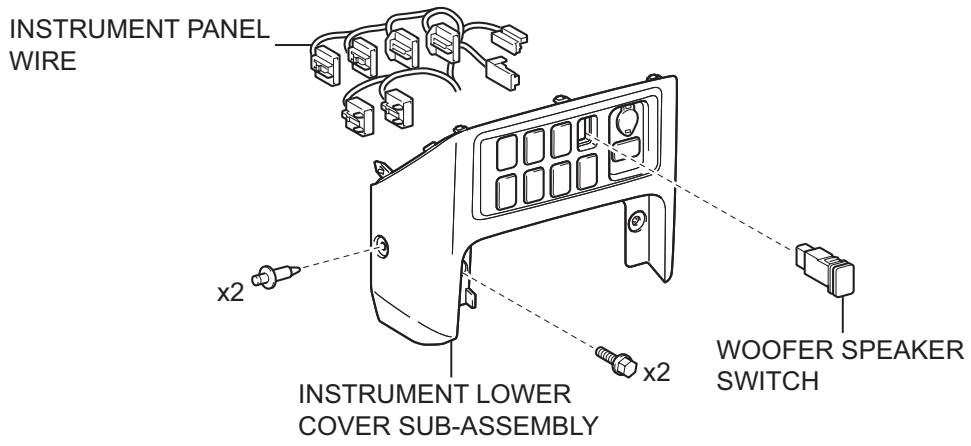

Y

B135189E01

REMOVAL

1. **DISCONNECT CABLE FROM NEGATIVE BATTERY TERMINAL**
2. **REMOVE SHIFT LEVER KNOB SUB-ASSEMBLY (for Manual Transmission) (See page IP-11)**
3. **REMOVE SHIFT LEVER KNOB SUB-ASSEMBLY (for 4WD) (See page IP-11)**
4. **REMOVE PARKING BRAKE HOLE COVER SUB-ASSEMBLY (See page IP-11)**
5. **REMOVE FRONT CONSOLE BOX UPPER PANEL SUB-ASSEMBLY (See page IP-12)**
6. **REMOVE FRONT CONSOLE BOX BOTTOM MAT (See page IP-12)**
7. **REMOVE FRONT CONSOLE BOX (See page IP-12)**
8. **REMOVE INSTRUMENT LOWER COVER SUB-ASSEMBLY (See page IP-13)**
9. **REMOVE WOOFER SPEAKER SWITCH**
   (a) Disengage the 2 claws and remove the woofer speaker switch.

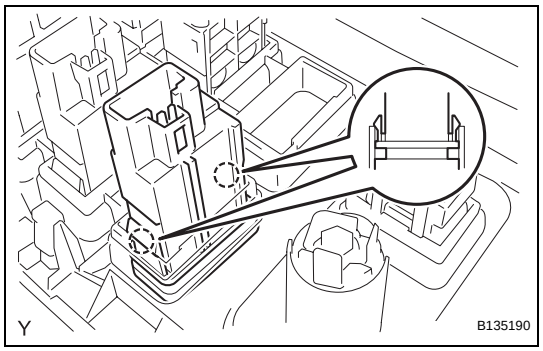

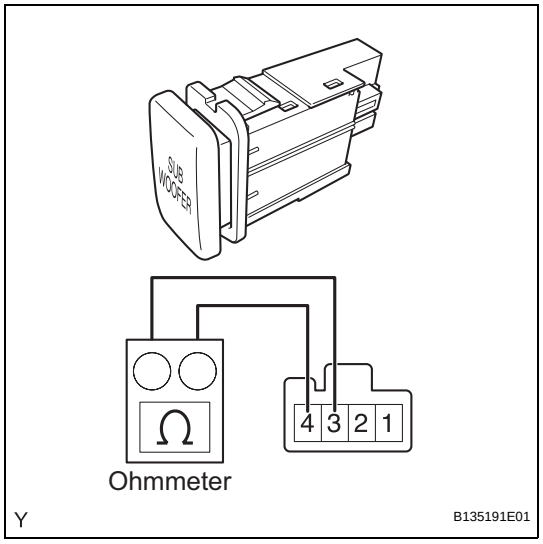

INSPECTION

1. **INSPECT WOOFER SPEAKER SWITCH**
   (a) Check the resistance.
      (1) Using an ohmmeter, measure the resistance between the terminals.
      Standard resistance

Tester Connection	Condition	Specified Condition
3 (IN) - 4 (OUT)	OFF	10 kΩ or higher
	ON	Below 1 Ω

If the result is not as specified, replace the woofer speaker switch.

AV

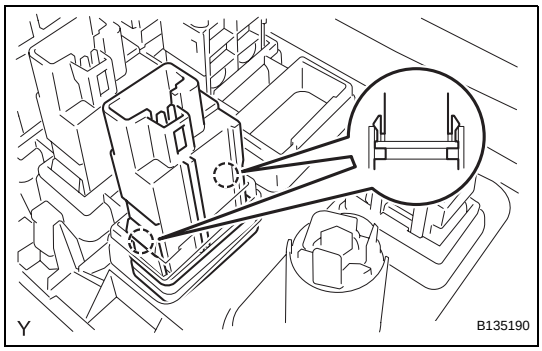

INSTALLATION

1. **INSTALL WOOFER SPEAKER SWITCH**
   (a) Engage the 2 claws and install the woofer speaker switch.
2. **INSTALL INSTRUMENT LOWER COVER SUB-ASSEMBLY (See page IP-30)**
3. **INSTALL FRONT CONSOLE BOX (See page IP-31)**
4. **INSTALL FRONT CONSOLE BOX BOTTOM MAT (See page IP-31)**
5. **INSTALL FRONT CONSOLE BOX UPPER PANEL SUB-ASSEMBLY (See page IP-31)**
6. **INSTALL PARKING BRAKE HOLE COVER SUB-ASSEMBLY (See page IP-32)**
7. **INSTALL SHIFT LEVER KNOB SUB-ASSEMBLY (for 4WD) (See page IP-32)**
8. **INSTALL SHIFT LEVER KNOB SUB-ASSEMBLY (for Manual Transmission) (See page IP-32)**
9. **CONNECT CABLE TO NEGATIVE BATTERY TERMINAL**
   Torque: 3.9 N*m (40 kgf*cm, 35 in.*lbf)

AXLE SYSTEM

PROBLEM SYMPTOMS TABLE

HINT:
Use the table below to help you find the cause of the problem. The numbers indicate the ranked order of probability of each of the possible causes. Check each part in the order suggested. If necessary, replace the applicable parts.

Symptom	Suspected area	See page
Vehicle unstable	1. Tire (Worn or improperly inflated)	TW-1
	2. Wheel alignment (Incorrect)	SP-2
	3. Steering linkage (Loosen or worn)	-
	4. Hub bearing (Worn)	AH-1
	5. Steering gear (Out of adjustment or broken)	-
	6. Suspension parts (Worn)	-
Front wheel shimmy	1. Tire (Worn or improperly inflated)	TW-1
	2. Wheel (Out of balance)	TW-1
	3. Front shock absorber (Worn)	SP-11
	4. Wheel alignment (Incorrect)	SP-2
	5. Upper ball joint (Worn)	SP-17
	6. Lower ball joint (Worn)	SP-22
	7. Hub bearing (Worn)	AH-1
	8. Steering linkage (Loose or worn)	-
Rear wheel shimmy	1. Tire (Worn or improperly inflated)	TW-1
	2. Wheel (Out of balance)	TW-1
	3. Rear shock absorber (Worn)	SP-32
	4. Hub bearing (Worn)	AH-2

ON-VEHICLE INSPECTION

1. **REMOVE FRONT WHEEL**
2. **REMOVE FRONT DISC BRAKE CALIPER ASSEMBLY (See page AH-7)**
3. **REMOVE FRONT DISC (See page BR-42)**
4. **REMOVE FRONT AXLE HUB GREASE CAP (for 4WD) (See page DS-3)**
5. **INSPECT FRONT AXLE HUB BEARING**

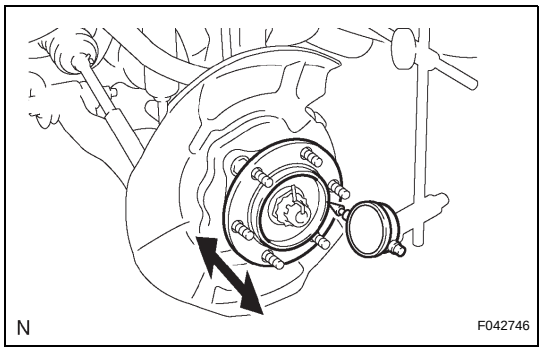

(a) Inspect the axle hub backlash.
(1) Using a dial indicator, check the backlash near the center of the axle hub.
Maximum:
0.05 mm (0.0020 in.)
If the backlash is greater than the maximum, replace the bearing.

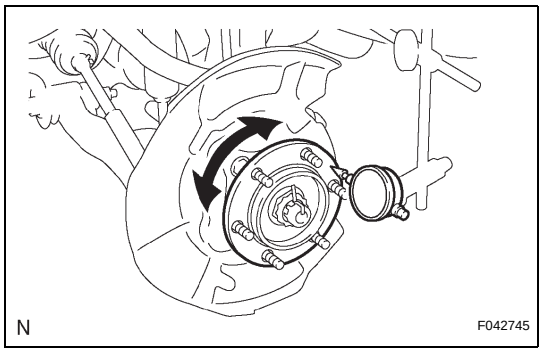

(b) Inspect the axle hub runout.
(1) Using a dial indicator, check the runout of the surface of the axle hub.
Maximum:
0.05 mm (0.0020 in.)
If the runout is greater than the maximum, replace the bearing.

6. **INSTALL FRONT AXLE HUB GREASE CAP (for 4WD)**
7. **INSTALL FRONT DISC (See page BR-45)**
8. **INSTALL FRONT DISC BRAKE CALIPER ASSEMBLY (See page AH-11)**
9. **FILL RESERVOIR WITH BRAKE FLUID (See page BR-5)**
10. **BLEED BRAKE LINE (See page BR-5)**
11. **CHECK FLUID LEVEL IN RESERVOIR (See page BR-7)**
12. **INSTALL FRONT WHEEL**
Torque: 112 N*m (1,137 kgf*cm, 82 ft.*lbf)
13. **REMOVE REAR WHEEL**
14. **SEPARATE REAR DISC BRAKE CALIPER ASSEMBLY (See page PB-17)**
15. **REMOVE REAR DISC (See page PB-17)**

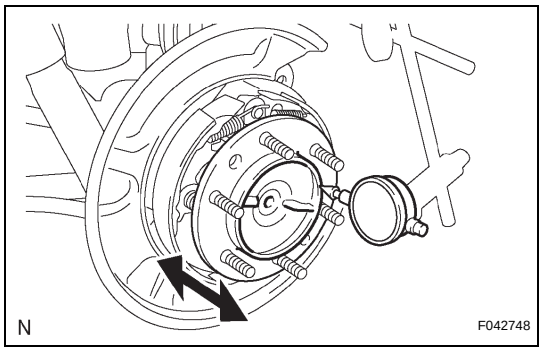

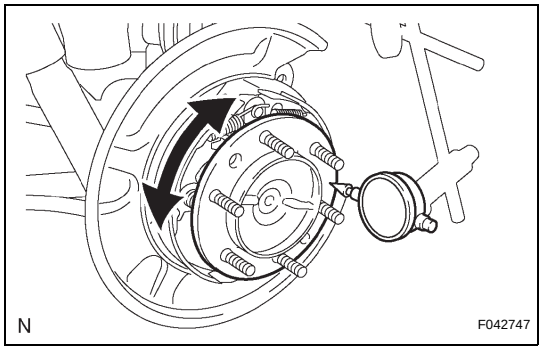

16. INSPECT REAR AXLE SHAFT BEARING

(a) Inspect the axle shaft backlash.

(1) Using a dial indicator, check the backlash near the center of the axle shaft.

Maximum:

0.05 mm (0.0020 in.)

If the backlash is greater than the maximum, replace the bearing.

(b) Inspect the axle shaft runout.

(1) Using a dial indicator, check the runout of the surface of the axle shaft.

Maximum:

0.05 mm (0.0020 in.)

If the runout is greater than the maximum, replace the bearing.

17. INSTALL REAR DISC (See page PB-20)

18. ADJUST PARKING BRAKE SHOE CLEARANCE (See page PB-20)

19. INSTALL REAR DISC BRAKE CALIPER ASSEMBLY (See page PB-20)

20. INSTALL REAR WHEEL

Torque: 112 N*m (1,137 kgf*cm, 82 ft.*lbf)

FRONT AXLE HUB BOLT

COMPONENTS

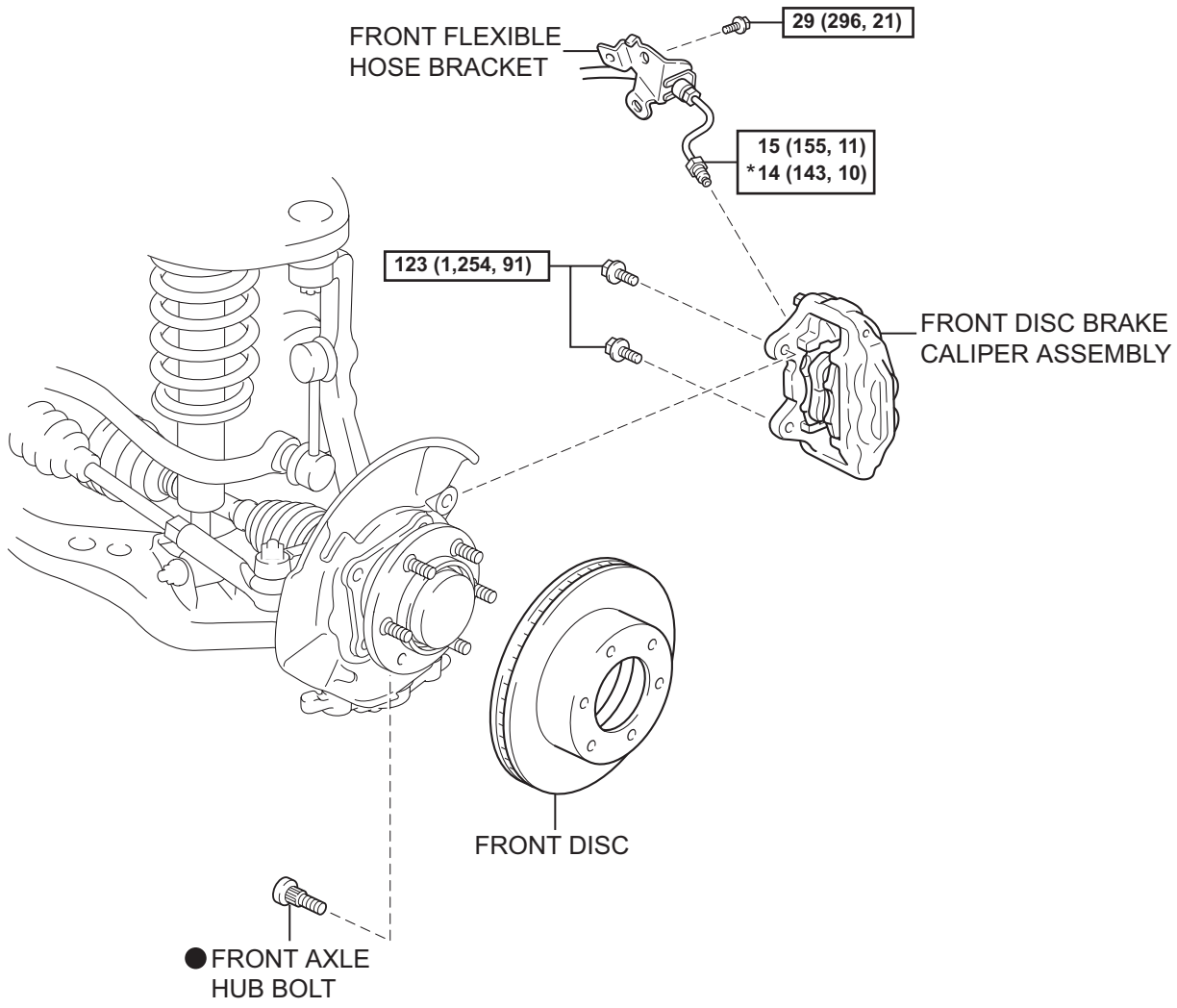

N*m (kgf*cm, ft*lbf) : Specified torque

● Non-reusable part

* For use with SST

N

C133101E01

AH

REMOVAL

1. **REMOVE FRONT WHEEL**
2. **DRAIN BRAKE FLUID**
   NOTICE:
   Immediately wash off any brake fluid that comes into contact with painted surfaces.
3. **REMOVE FRONT DISC BRAKE CALIPER ASSEMBLY (See page AH-7)**
4. **REMOVE FRONT DISC (See page BR-42)**
5. **REMOVE FRONT AXLE HUB BOLT**
   (a) Using SST and a screwdriver or the equivalent to hold the axle hub, remove the hub bolt.
   SST 09650-17011

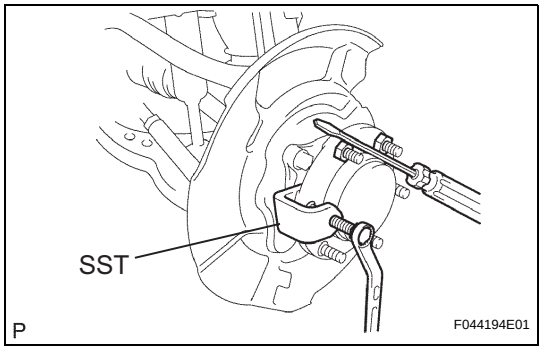

INSTALLATION

1. **INSTALL FRONT AXLE HUB BOLT**
   (a) Install the washer and the nut onto a new hub bolt, as shown in the illustration.
   (b) Using a screwdriver or the equivalent to hold the axle hub, install the hub bolt by tightening the nut.
2. **INSTALL FRONT DISC (See page BR-45)**
3. **INSTALL FRONT DISC BRAKE CALIPER ASSEMBLY (See page AH-11)**
4. **INSTALL FRONT WHEEL**
   Torque: 112 N*m (1,137 kgf*cm, 82 ft.*lbf)
5. **FILL RESERVOIR WITH BRAKE FLUID (See page BR-5)**
6. **BLEED BRAKE LINE (See page BR-5)**
7. **CHECK FLUID LEVEL IN RESERVOIR (See page BR-7)**
8. **CHECK FOR BRAKE FLUID LEAKAGE**

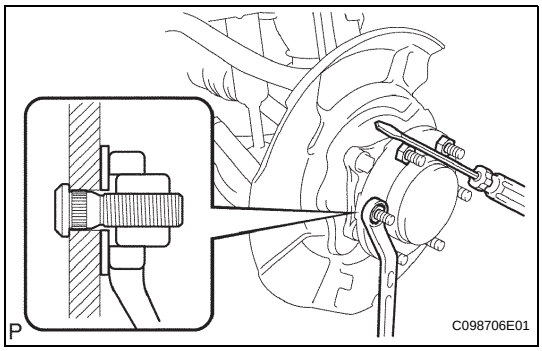

FRONT AXLE HUB

COMPONENTS

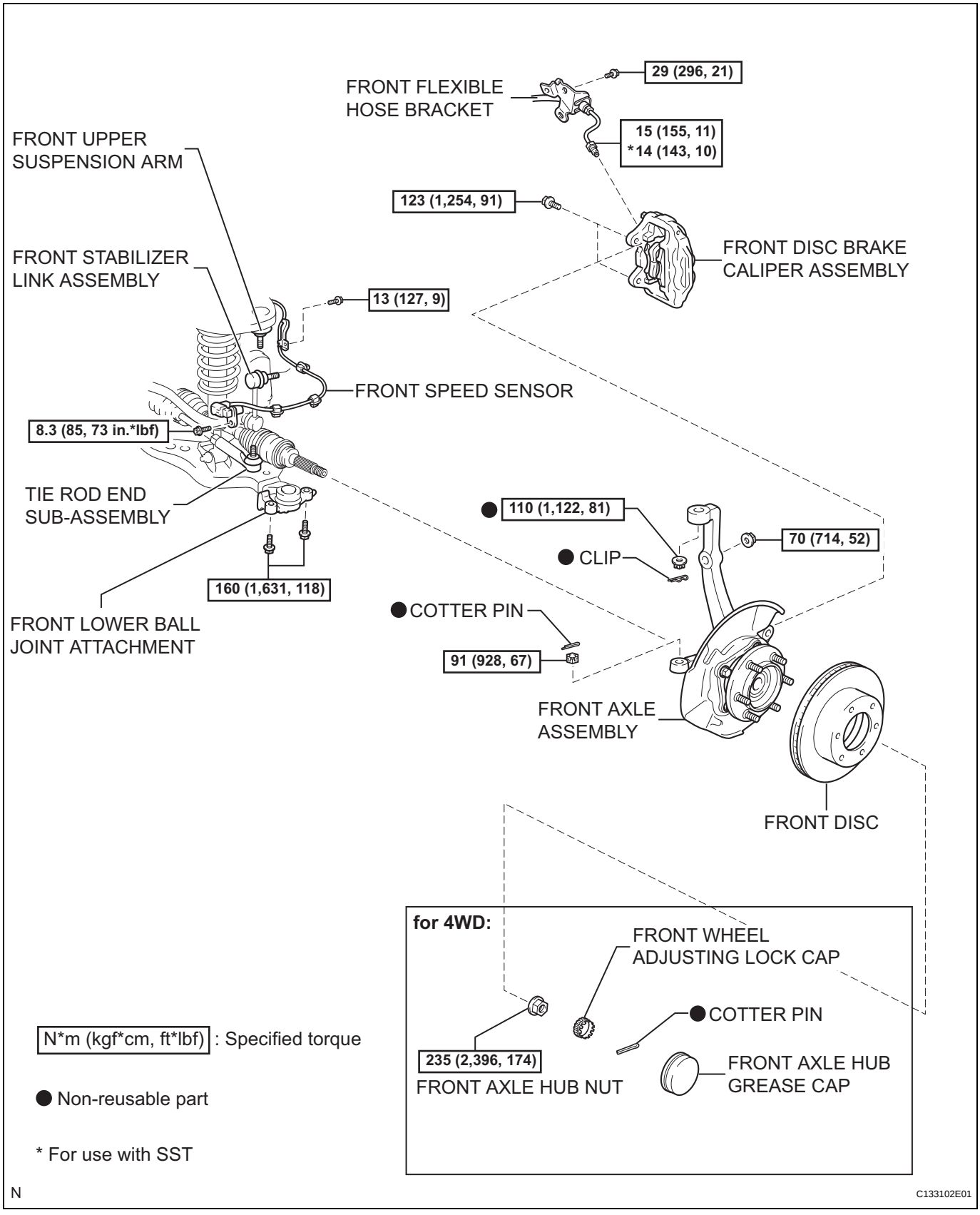

AH

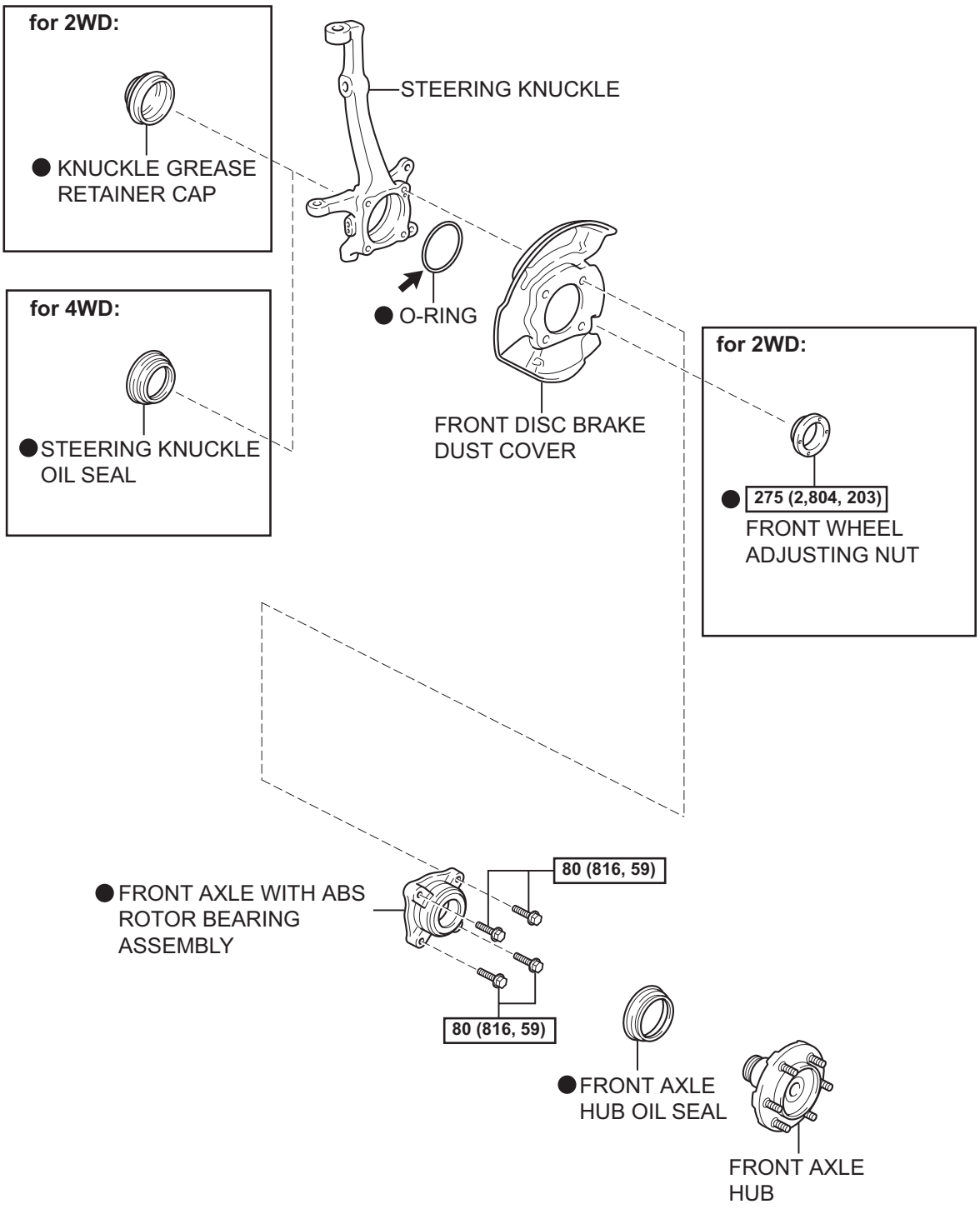

N*m (kgf*cm, ft*lbf) : Specified torque

● Non-reusable part

⬅ MP grease

N

C114110E02

REMOVAL

1. **DISCONNECT CABLE FROM NEGATIVE BATTERY TERMINAL**
2. **REMOVE FRONT WHEEL**
3. **DRAIN BRAKE FLUID**
   NOTICE:
   Immediately wash off any brake fluid that comes into contact with painted surfaces.
4. **REMOVE FRONT DISC BRAKE CALIPER ASSEMBLY**
   (a) Remove the bolt and separate the brake tube bracket from the steering knuckle.

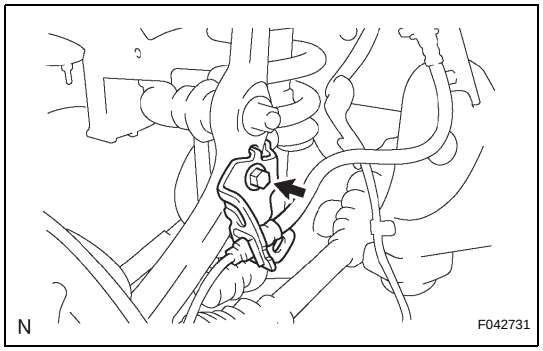

   (b) Using SST, separate the brake tube from the disc brake cylinder.
   SST 09023-00101
   HINT:
   Use a container to collect the brake fluid as it drains out.

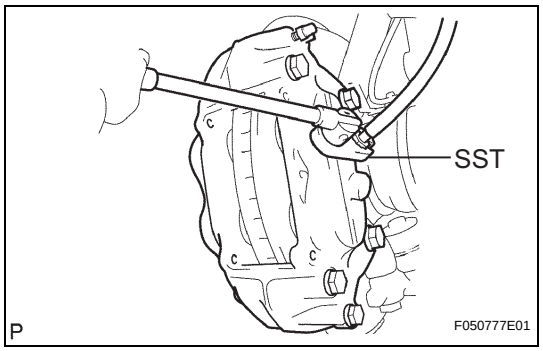

   (c) Remove the 2 bolts and disc brake caliper assembly.

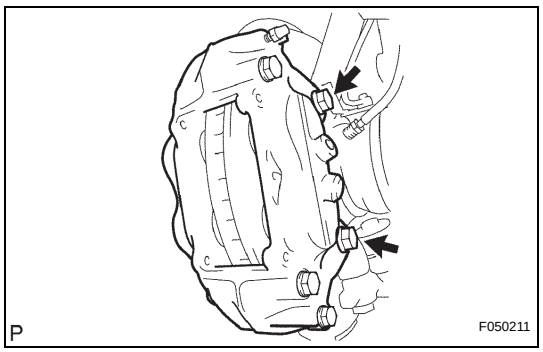

5. **REMOVE FRONT DISC (See page BR-42)**
6. **SEPARATE FRONT SPEED SENSOR (See page DS-3)**
7. **REMOVE FRONT AXLE HUB GREASE CAP (for 4WD) (See page DS-3)**
8. **REMOVE FRONT AXLE HUB NUT (for 4WD) (See page DS-3)**
9. **SEPARATE FRONT STABILIZER LINK ASSEMBLY (See page SP-10)**
10. **SEPARATE TIE ROD END SUB-ASSEMBLY (See page DS-3)**
11. **SEPARATE FRONT LOWER BALL JOINT ATTACHMENT (See page DS-4)**
12. **SEPARATE FRONT UPPER SUSPENSION ARM**
    (a) Support the lower arm with a jack.
    (b) Remove the clip and nut.

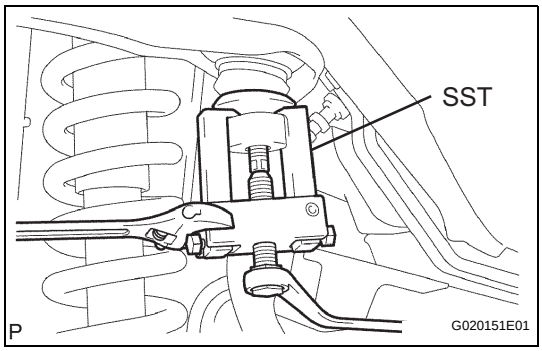

(c) Using SST, separate the upper ball joint from the steering knuckle.
SST 09628-62011

13. REMOVE FRONT AXLE ASSEMBLY
(a) for 4WD:
(1) Using a plastic hammer, separate the front axle hub from the front drive shaft.
(b) Remove the front axle assembly.

DISASSEMBLY

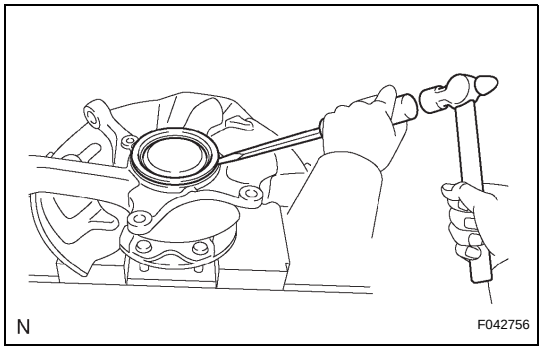

1. REMOVE KNUCKLE GREASE RETAINER CAP (for 2WD)
(a) Using a screwdriver and hammer, remove the retainer cap.

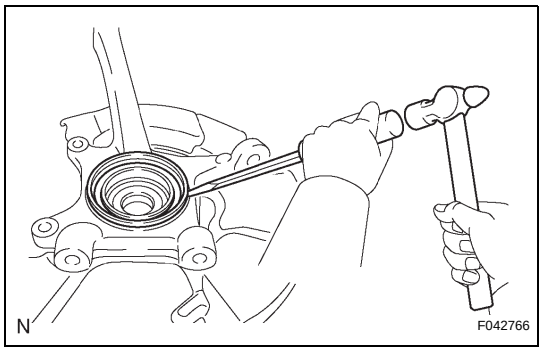

2. REMOVE STEERING KNUCKLE OIL SEAL (for 4WD)
(a) Using a screwdriver and hammer, remove the oil seal.

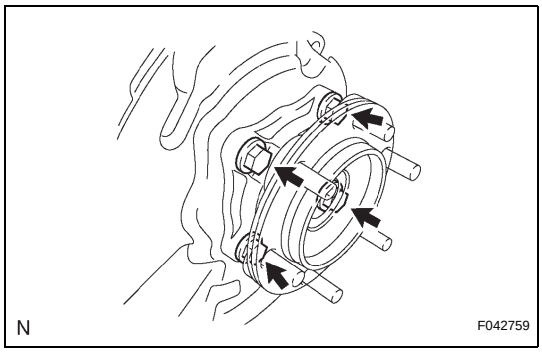

3. REMOVE FRONT AXLE HUB
(a) Remove the 4 bolts, axle hub and dust cover from the steering knuckle.
(b) Remove the O-ring from the axle hub.

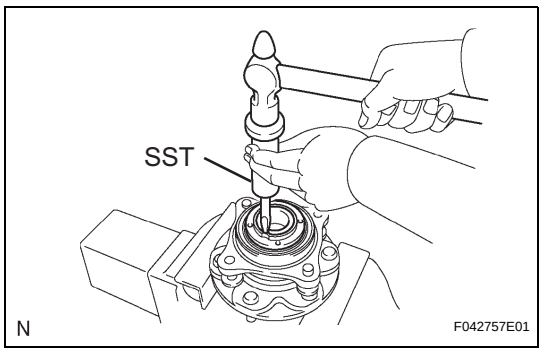

4. REMOVE FRONT WHEEL ADJUSTING NUT (for 2WD)
(a) Using SST and a hammer, unstake the adjusting nut.
SST 09930-00010

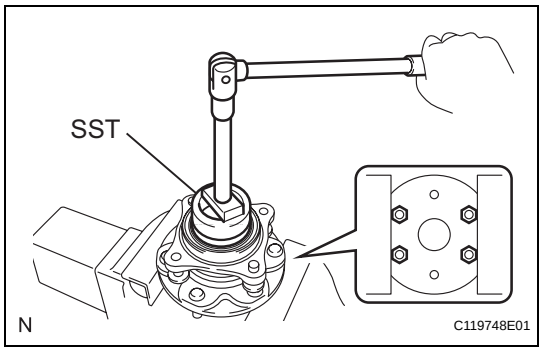

(b) Using SST, remove the front wheel adjusting nut.
SST 09318-12010

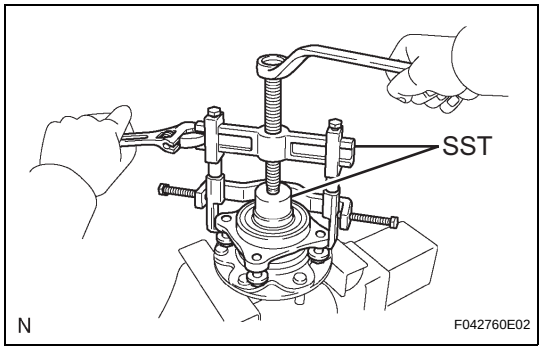

5. REMOVE FRONT AXLE WITH ABS ROTOR BEARING ASSEMBLY

(a) Gently fix the front axle hub in a vise.

(b) Using SST, remove the bearing.
SST 09710-30021 (09710-03051), 09950-40011 (09951-04020, 09952-04010, 09953-04020, 09954-04010, 09955-04061, 09957-04010, 09958-04011)

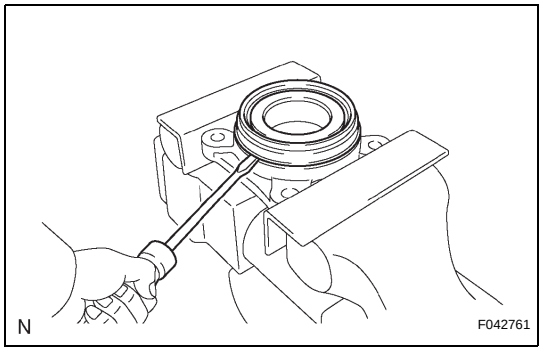

6. REMOVE FRONT AXLE HUB OIL SEAL

(a) Using a screwdriver, remove the oil seal.

REASSEMBLY

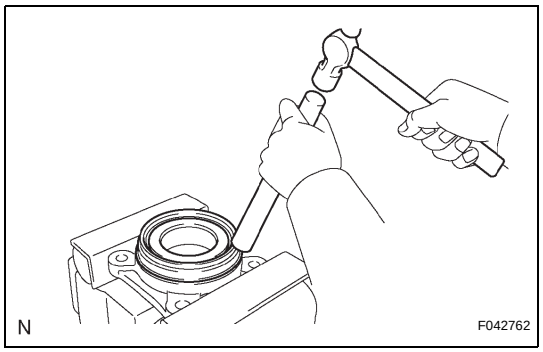

1. INSTALL FRONT AXLE HUB OIL SEAL

(a) Using a brass bar and a hammer, install a new oil seal.
NOTICE:
Do not damage the oil seal.

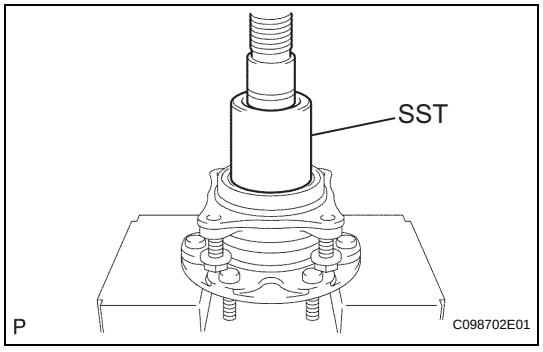

2. INSTALL FRONT AXLE WITH ABS ROTOR BEARING ASSEMBLY

(a) Using SST and a press, install a new bearing onto the axle hub.
SST 09649-17010

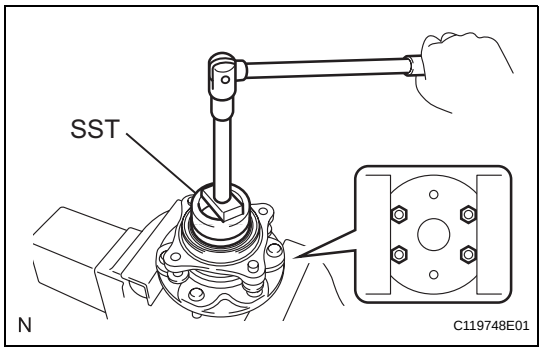

3. INSTALL FRONT WHEEL ADJUSTING NUT (for 2WD)

(a) Using SST, install a new adjusting nut.
SST 09318-12010
Torque: 275 N*m (2,804 kgf*cm, 203 ft.*lbf)

4. INSTALL FRONT AXLE HUB

(a) Apply MP grease to a new O-ring.

(b) Install the new O-ring onto the axle hub.

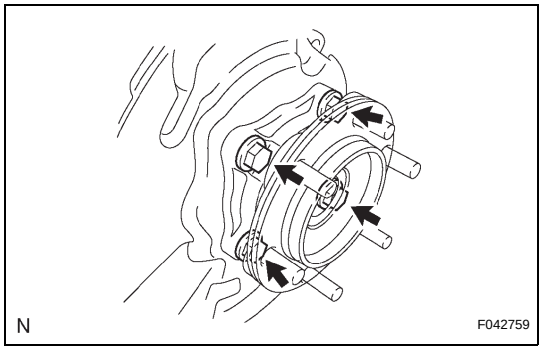

(c) Install the dust cover and axle hub onto the steering knuckle with the 4 bolts.
Torque: 80 N*m (816 kgf*cm, 59 ft.*lbf)

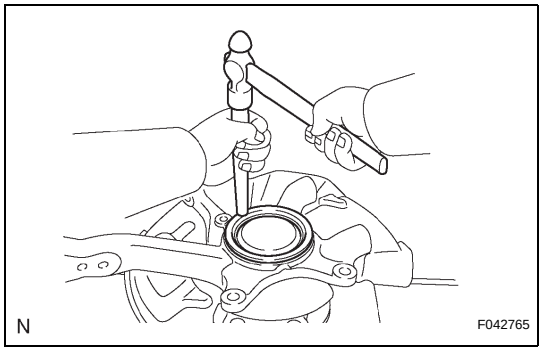

5. INSTALL KNUCKLE GREASE RETAINER CAP (for 2WD)

(a) Using a brass bar and a hammer, install a new retainer cap.
NOTICE:
Do not damage the retainer cap.

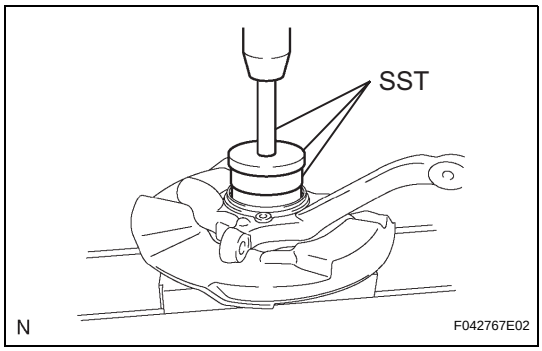

6. INSTALL STEERING KNUCKLE OIL SEAL (for 4WD)

(a) Using SST and a press, install a new oil seal.
SST 09527-17011, 09950-70010 (09951-07100), 09951-01000

INSTALLATION

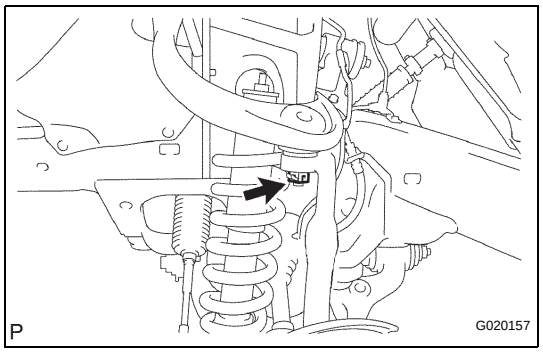

1. **INSTALL FRONT AXLE ASSEMBLY**
2. **INSTALL FRONT UPPER SUSPENSION ARM**
   (a) Install a new nut and a new clip.
   Torque: 110 N*m (1,122 kgf*cm, 81 ft.*lbf)
3. **INSTALL FRONT LOWER BALL JOINT ATTACHMENT (See page DS-10)**
4. **INSTALL TIE ROD END SUB-ASSEMBLY (See page DS-10)**
5. **INSTALL FRONT STABILIZER LINK ASSEMBLY (See page SP-13)**
6. **INSTALL FRONT AXLE HUB NUT (for 4WD) (See page DS-10)**
7. **INSPECT FRONT AXLE HUB BEARING (See page AH-1)**
8. **INSTALL FRONT AXLE HUB GREASE CAP (for 4WD)**
9. **INSTALL FRONT SPEED SENSOR (See page DS-10)**
10. **INSTALL FRONT DISC (See page BR-45)**
11. **INSTALL FRONT DISC BRAKE CALIPER ASSEMBLY**
    (a) Install the front disc brake caliper assembly with the 2 bolts.
    Torque: 123 N*m (1,254 kgf*cm, 91 ft.*lbf)

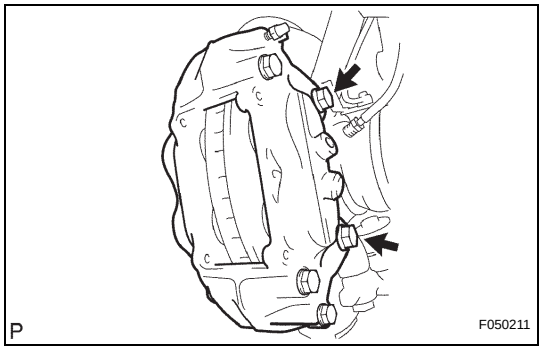

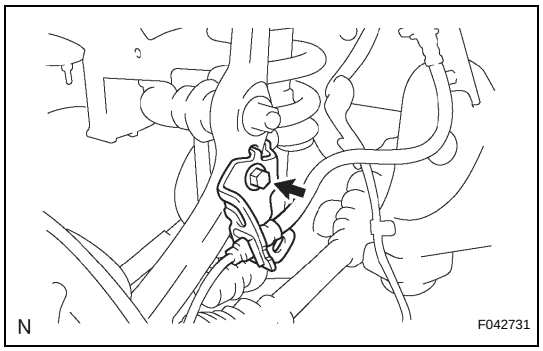

(b) Install the brake tube bracket onto the steering knuckle with the bolt.
Torque: 29 N*m (296 kgf*cm, 21 ft.*lbf)

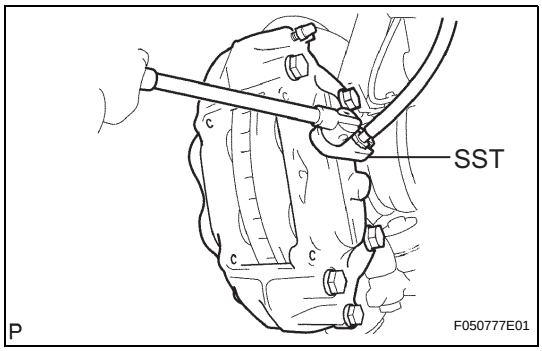

(c) Using SST, install the brake tube onto the disc brake cylinder.
SST 09023-00101
Torque: for use without SST
15 N*m (155 kgf*cm, 11 ft.*lbf)
for use with SST
14 N*m (143 kgf*cm, 10 ft.*lbf)
HINT:
- Use a torque wrench with a fulcrum length of 300 mm (11.81 in.).
- This torque value is effective when SST is parallel to the torque wrench.

12. **INSTALL FRONT WHEEL**
Torque: 112 N*m (1,137 kgf*cm, 82 ft.*lbf)
13. **CONNECT CABLE TO NEGATIVE BATTERY TERMINAL**
Torque: 3.9 N*m (40 kgf*cm, 35 in.*lbf)
14. **FILL RESERVOIR WITH BRAKE FLUID (See page BR-5)**
15. **BLEED BRAKE LINE (See page BR-5)**
16. **CHECK FLUID LEVEL IN RESERVOIR (See page BR-7)**
17. **CHECK FOR BRAKE FLUID LEAKAGE**
18. **CHECK VSC SENSOR SIGNAL**
(See page BC-28)
19. **INSPECT AND ADJUST FRONT WHEEL ALIGNMENT**
(See page SP-2)

REAR AXLE HUB BOLT

COMPONENTS

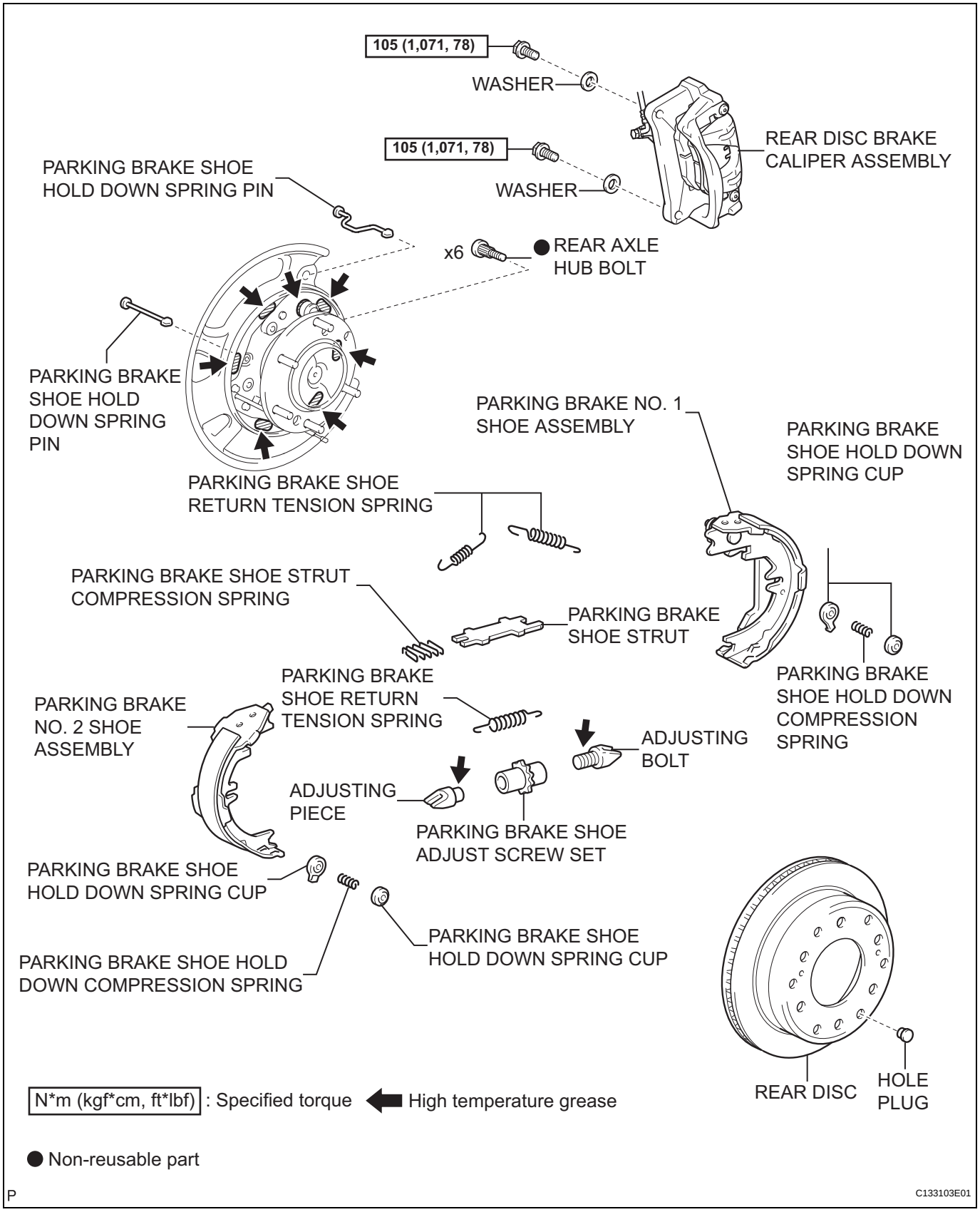

AH

REMOVAL

1. **REMOVE REAR WHEEL**
2. **SEPARATE REAR DISC BRAKE CALIPER ASSEMBLY (See page PB-17)**
3. **REMOVE REAR DISC (See page PB-17)**
4. **REMOVE PARKING BRAKE SHOE RETURN TENSION SPRING (See page PB-17)**
5. **REMOVE PARKING BRAKE SHOE STRUT (See page PB-17)**
6. **REMOVE PARKING BRAKE SHOE (See page PB-17)**
7. **REMOVE REAR AXLE HUB BOLT**
   (a) Using SST and a screwdriver or the equivalent to hold the axle hub, remove the hub bolt.
   SST 09650-17011

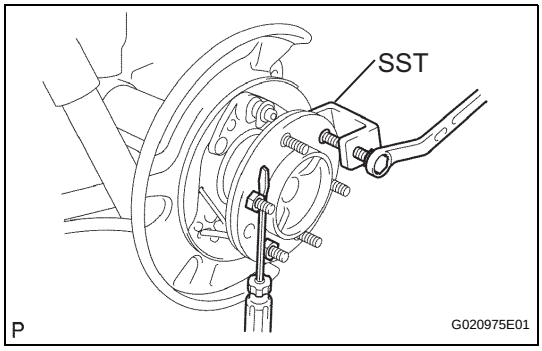

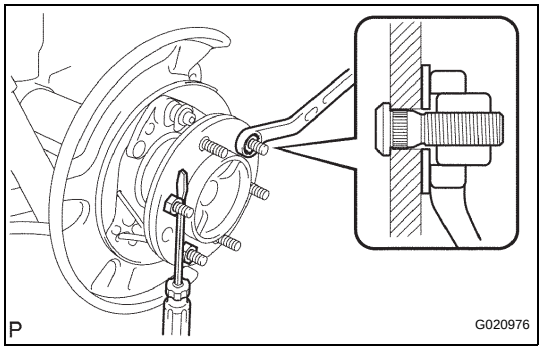

INSTALLATION

1. **INSTALL REAR AXLE HUB BOLT**
   (a) Install the washer and the nut onto a new hub bolt, as shown in the illustration.
   (b) Using a screwdriver or the equivalent to hold the axle hub, install the hub bolt by tightening the nut.
2. **APPLY HIGH TEMPERATURE GREASE (See page PB-19)**
3. **INSTALL PARKING BRAKE SHOE (See page PB-19)**
4. **INSTALL PARKING BRAKE SHOE STRUT (See page PB-19)**
5. **INSTALL PARKING BRAKE SHOE RETURN TENSION SPRING (See page PB-19)**
6. **CHECK PARKING BRAKE INSTALLATION (See page PB-20)**
7. **INSTALL REAR DISC (See page PB-20)**
8. **ADJUST PARKING BRAKE SHOE CLEARANCE (See page PB-20)**
9. **INSTALL REAR DISC BRAKE CALIPER ASSEMBLY (See page PB-20)**
10. **INSTALL REAR WHEEL**
    Torque: 112 N*m (1,137 kgf*cm, 82 ft.*lbf)
11. **INSPECT PARKING BRAKE LEVER TRAVEL (See page PB-4)**

12. **ADJUST PARKING BRAKE LEVER TRAVEL (See page PB-4)**

REAR AXLE SHAFT

COMPONENTS

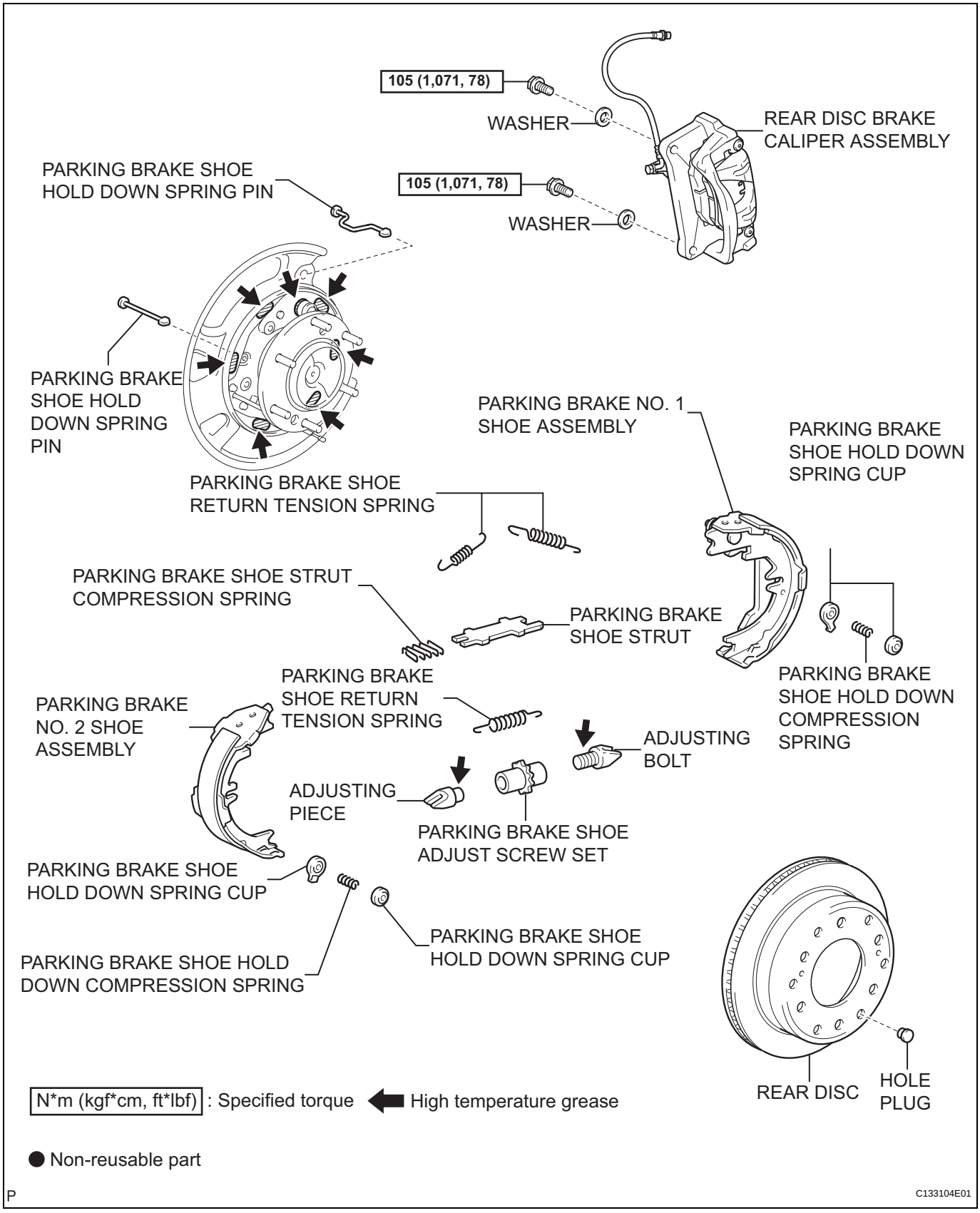

AH

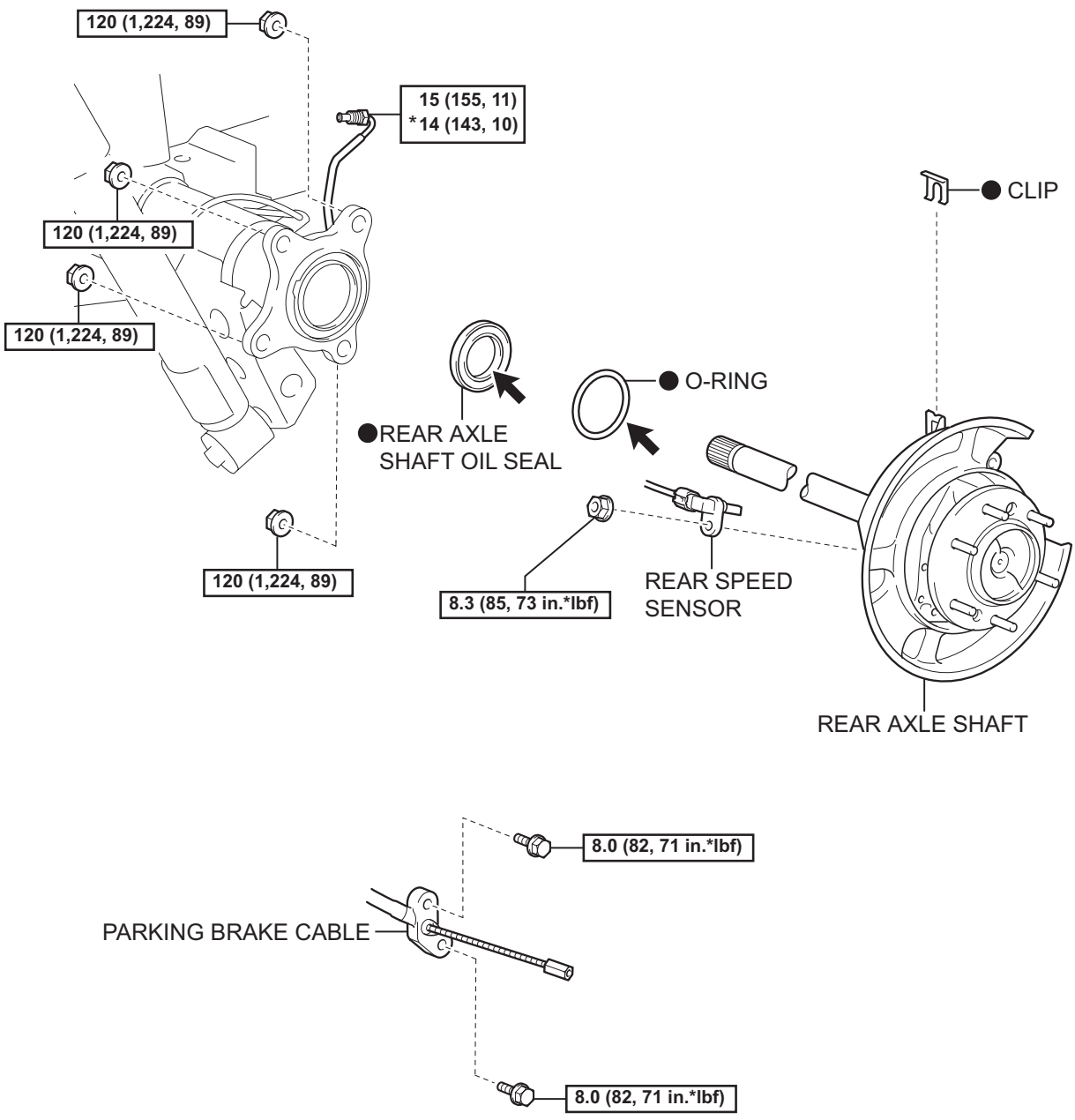

N*m (kgf*cm, ft*lbf) : Specified torque

● Non-reusable part

* For use with SST ⬅ MP grease

P

C133105E01

AH

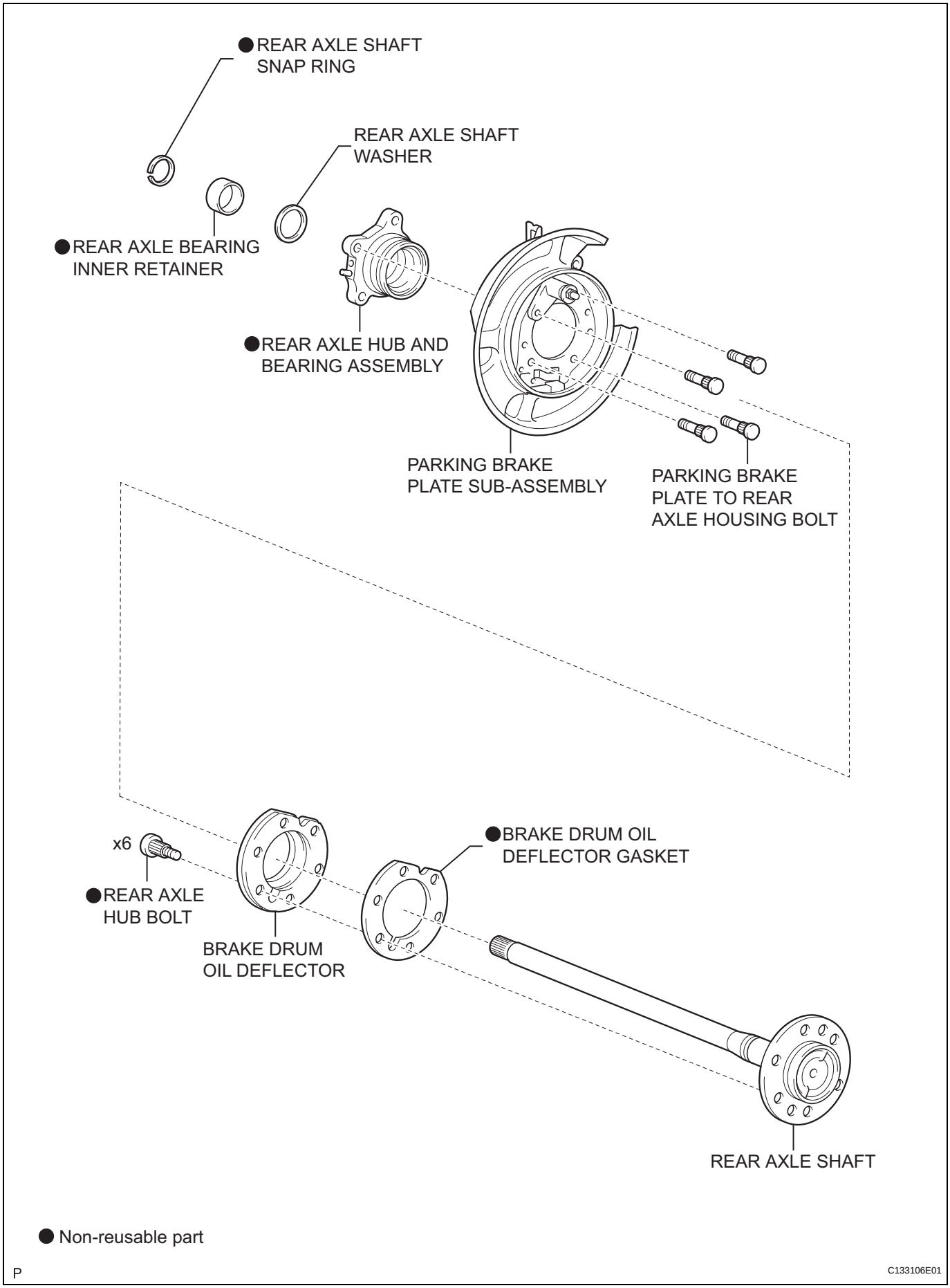

● Non-reusable part

P

C133106E01

AH

REMOVAL

1. **DISCONNECT CABLE FROM NEGATIVE BATTERY TERMINAL**

2. **REMOVE REAR WHEEL**

3. **DRAIN BRAKE FLUID**
   HINT:
   Immediately wash off any brake fluid that comes into contact with any painted surfaces.

4. **REMOVE REAR DISC BRAKE CALIPER ASSEMBLY**
   (a) Using SST, separate the brake tube.
   SST 09023-00101
   HINT:
   Use a container to catch the brake fluid.
   (b) Remove the clip and flexible hose.

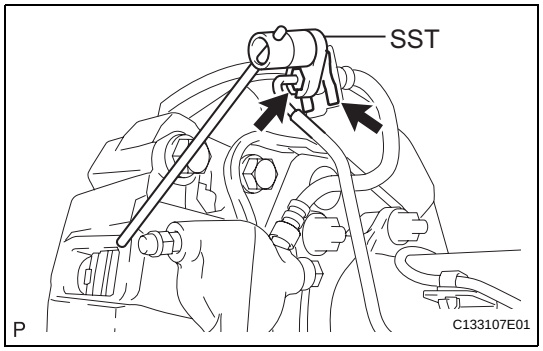

   (c) Remove the 2 bolts and 2 washers and remove the disc brake caliper assembly.

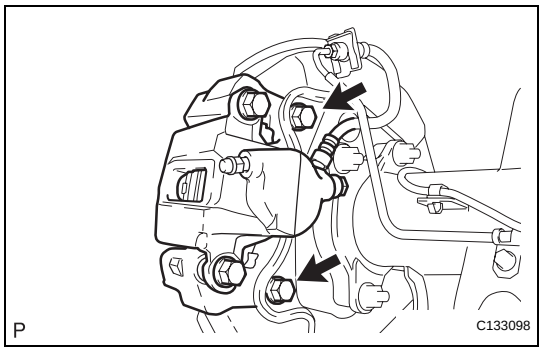

5. **REMOVE REAR DISC (See page PB-17)**

6. **REMOVE PARKING BRAKE SHOE RETURN TENSION SPRING (See page PB-17)**

7. **REMOVE PARKING BRAKE SHOE STRUT (See page PB-17)**

8. **REMOVE PARKING BRAKE SHOE (See page PB-17)**

9. **SEPARATE PARKING BRAKE CABLE**
   (a) Remove the 2 bolts and separate the parking brake cable from the parking brake plate.

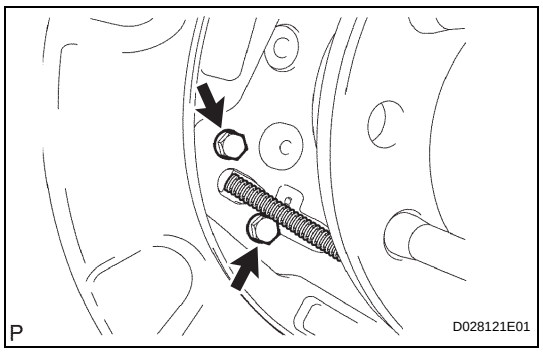

10. **REMOVE REAR SPEED SENSOR (See page BC-198)**

11. **REMOVE REAR AXLE SHAFT**
    (a) Remove the 4 nuts and rear axle shaft with parking brake plate.
    (b) Remove the O-ring.

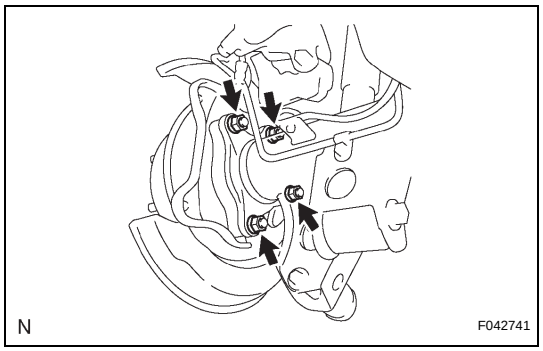

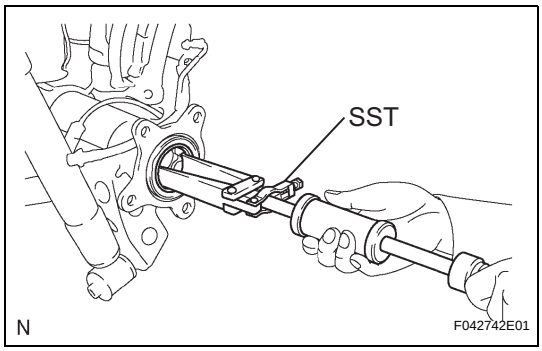

12. REMOVE REAR AXLE SHAFT OIL SEAL

(a) Using SST, remove the oil seal.
SST 09308-00010

DISASSEMBLY

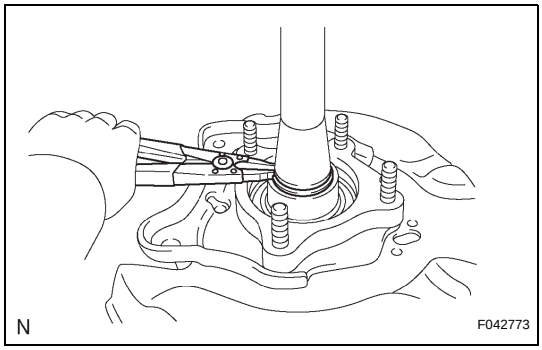

1. REMOVE REAR AXLE SHAFT SNAP RING

(a) Using a snap expander, remove the snap ring.

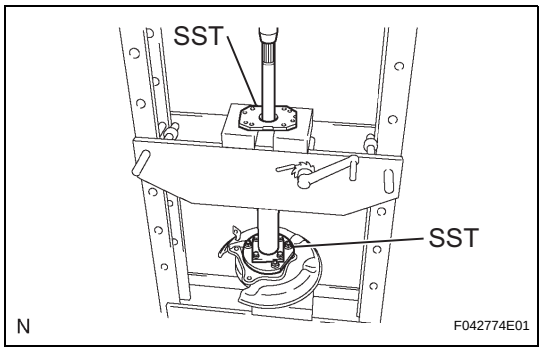

2. REMOVE REAR AXLE SHAFT

(a) Using SST and press, remove the rear axle shaft.
SST 09521-25011, 09521-25021

(b) Remove the rear axle bearing inner retainer from the axle hub.

(c) Remove the rear axle shaft washer from the axle hub.

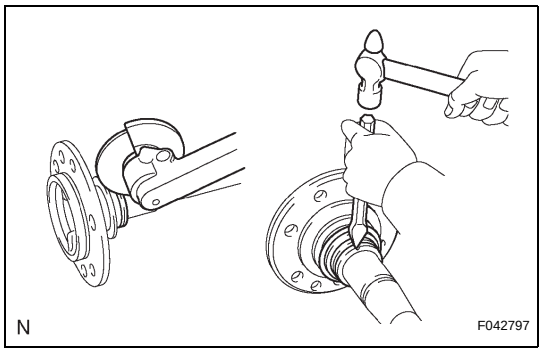

(d) Grind the rear axle bearing inner race surface using a grinder, then remove it with a chisel.

(e) Remove the rear axle shaft oil seal from the rear axle shaft.

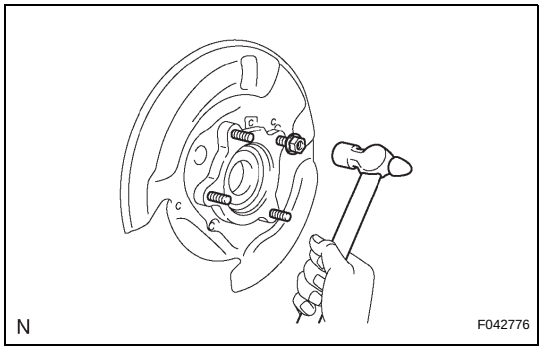

3. REMOVE REAR AXLE HUB AND BEARING ASSEMBLY

(a) Attach the 4 nuts to the housing bolts.

(b) Using a hammer, remove the 4 housing bolts and rear axle hub and bearing assembly.
NOTICE:
Do not reuse the nuts previously removed from the vehicle.

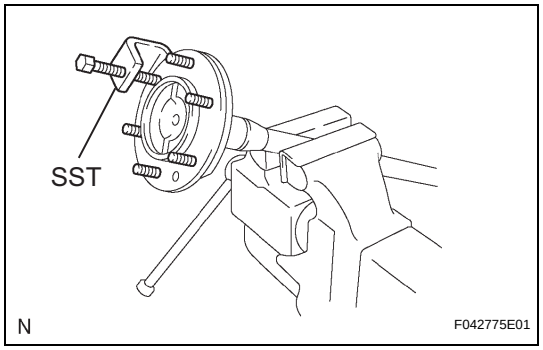

4. REMOVE BRAKE DRUM OIL DEFLECTOR

(a) Remove the deflector and deflector gasket to the rear axle shaft.

(b) Using SST, remove the 6 hub bolts.
SST 09650-17011

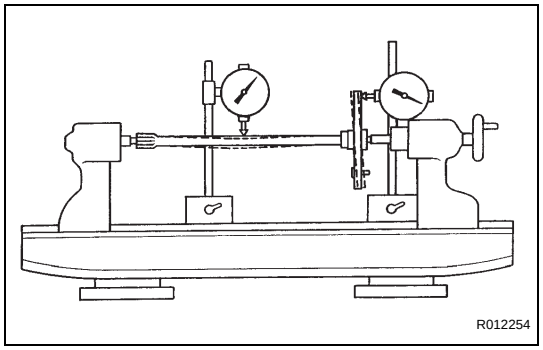

INSPECTION

1. INSPECT REAR AXLE SHAFT

(a) Using a dial indicator, measure the rear axle shaft runout and flange runout.
Maximum runout:
Shaft runout:
1.5 mm (0.0591 in.)
Flange runout:
0.05 mm (0.0020 in.)
If the rear axle shaft or flange is damaged or worn, or of runout of greater than the maximum, replace the rear axle shaft.

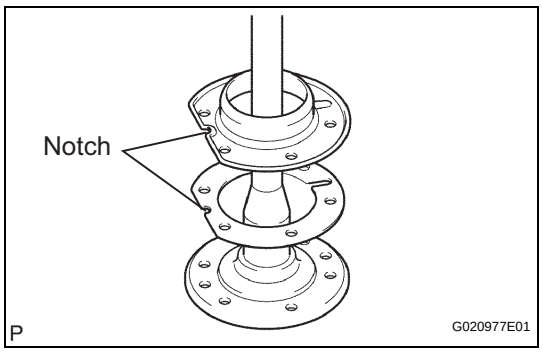

REASSEMBLY

1. INSTALL BRAKE DRUM OIL DEFLECTOR

(a) Install a new deflector gasket and deflector onto the rear axle shaft.
HINT:
Align the 2 notches.

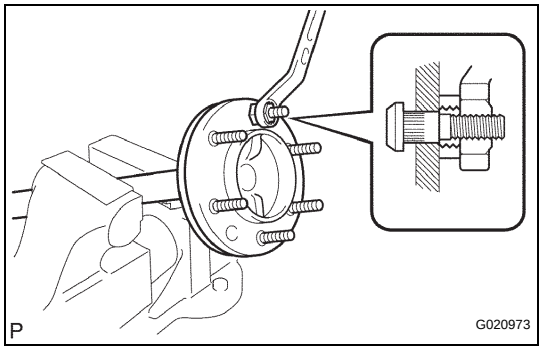

(b) Install the washer and nut onto a new hub bolt, as shown in the illustration.

(c) Install the hub bolt by tightening the nut.

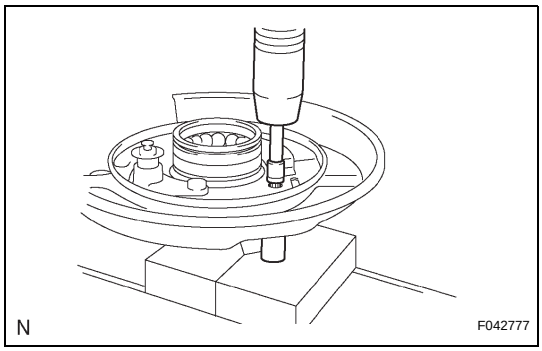

2. INSTALL REAR AXLE HUB AND BEARING ASSEMBLY

(a) Position the parking brake plate on a new rear axle hub and bearing assembly and install the 4 housing bolts using 2 socket wrenches and a press.

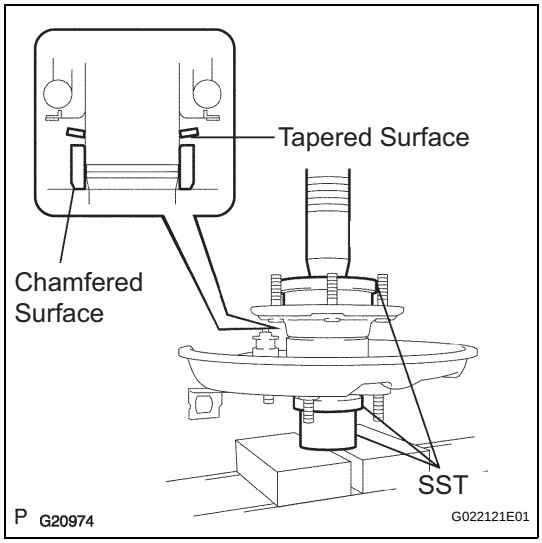

3. INSTALL REAR AXLE SHAFT

(a) Install the washer and a new retainer onto the axle hub in the orientations shown in the illustration.
NOTICE:
- **Install the washer with its tapered surface facing downward.**
- **Install the retainer with its chamfered surface facing downward.**

(b) Using SST and a press, install the rear axle shaft onto the rear axle hub and bearing.
SST 09631-12090, 09726-40010, 09951-01100

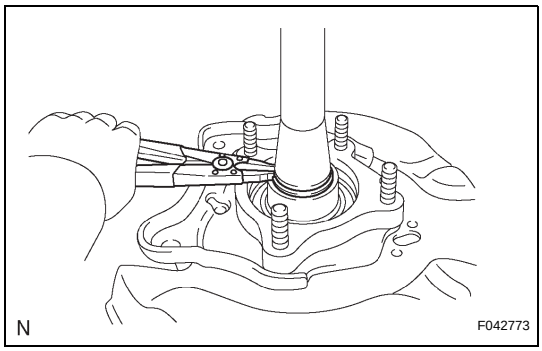

4. INSTALL REAR AXLE SHAFT SNAP RING

(a) Using a snap ring expander, install a new snap ring.

INSTALLATION

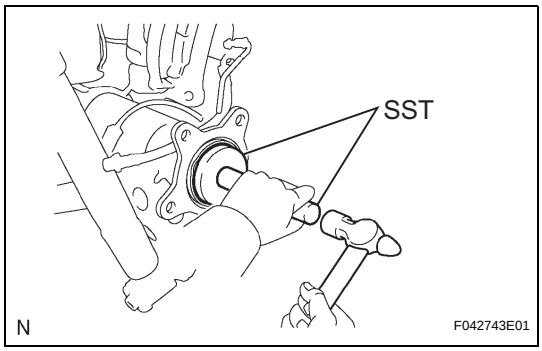

1. INSTALL REAR AXLE SHAFT OIL SEAL

(a) Using SST and a hammer, install a new oil seal.
SST 09950-60020 (09951-00770), 09950-70010 (09951-07150)

(b) Coat the lip of the oil seal with MP grease.

2. INSTALL REAR AXLE SHAFT

(a) Coat a new O-ring with MP grease and install it.

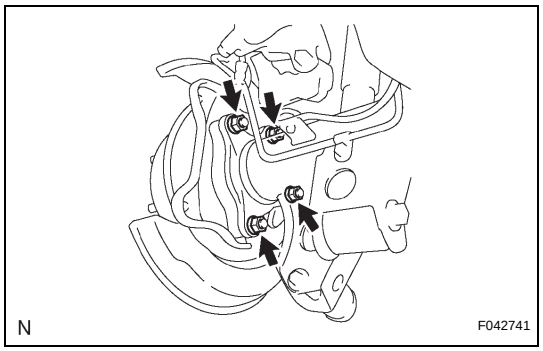

(b) Install the rear axle shaft together with the parking brake plate with the 4 nuts.
Torque: 120 N*m (1,224 kgf*cm, 89 ft.*lbf)

3. **INSPECT REAR AXLE SHAFT BEARING (See page AH-2)**
4. **INSTALL REAR SPEED SENSOR (See page BC-198)**

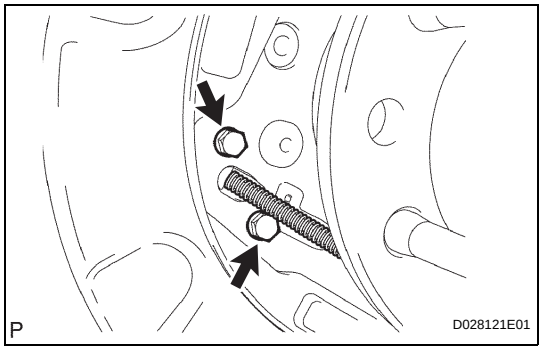

5. **INSTALL PARKING BRAKE CABLE**
(a) Install the parking brake cable onto the parking brake plate with the 2 bolts.
Torque: 8.0 N*m (82 kgf*cm, 71 in.*lbf)
6. **APPLY HIGH TEMPERATURE GREASE (See page PB-19)**
7. **INSTALL PARKING BRAKE SHOE (See page PB-19)**
8. **INSTALL PARKING BRAKE SHOE STRUT (See page PB-19)**
9. **INSTALL PARKING BRAKE SHOE RETURN TENSION SPRING (See page PB-19)**
10. **CHECK PARKING BRAKE INSTALLATION (See page PB-20)**
11. **INSTALL REAR DISC (See page PB-20)**
12. **ADJUST PARKING BRAKE SHOE CLEARANCE (See page PB-20)**
13. **INSTALL REAR DISC BRAKE CALIPER ASSEMBLY**
(a) Install the disc brake caliper assembly with the 2 bolts and 2 washers.
Torque: 105 N*m (1,071 kgf*cm, 78 ft.*lbf)
(b) Install the flexible hose with a new clip.

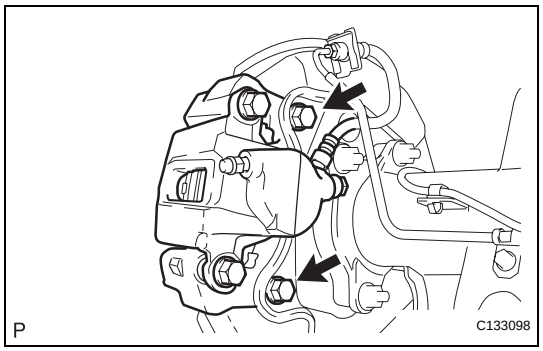

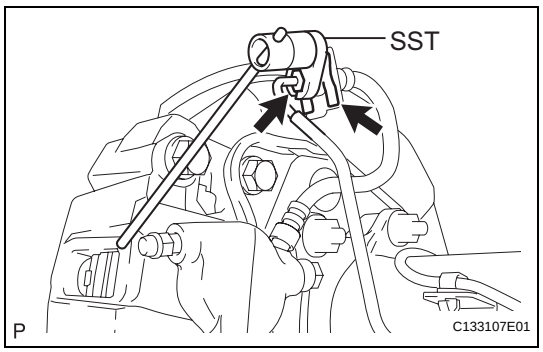

(c) Using SST, install the brake tube onto the flexible hose.
SST 09023-00101
Torque: for use without SST
15 N*m (155 kgf*cm, 11 ft.*lbf)
for use with SST
14 N*m (143 kgf*cm, 10 ft.*lbf)
HINT:
- Use a torque wrench with a fulcrum length of 300 mm (11.81 in.).
- This torque value is effective when SST is parallel to the torque wrench.

14. **INSTALL REAR WHEEL**
    Torque: 112 N*m (1,137 kgf*cm, 82 ft.*lbf)
15. **CONNECT CABLE TO NEGATIVE BATTERY TERMINAL**
    Torque: 3.9 N*m (40 kgf*cm, 35 in.*lbf)
16. **INSPECT DIFFERENTIAL OIL (See page DF-3)**
17. **CHECK FOR DIFFERENTIAL OIL LEAKAGE**
18. **FILL RESERVOIR WITH BRAKE FLUID (See page BR-5)**
19. **BLEED BRAKE LINE (See page BR-5)**
20. **CHECK FLUID LEVEL IN RESERVOIR (See page BR-7)**
21. **CHECK FOR BRAKE FLUID LEAKAGE**
22. **INSPECT PARKING BRAKE LEVER TRAVEL (See page PB-4)**
23. **ADJUST PARKING BRAKE LEVER TRAVEL (See page PB-4)**
24. **CHECK VSC SENSOR SIGNAL**
    (See page BC-28)

BRAKE SYSTEM

PRECAUTION

1. **Necessary care must be taken to replace each part properly as it could affect the brake system performance. This could cause driving hazards. Replace each part with an identical part with the same number.**
2. **It is very important to keep parts and the area clean when repairing the brake system.**
3. **If the vehicle is equipped with a mobile communication system, refer to the precautions in the INTRODUCTION section.**

SYSTEM DIAGRAM

BR

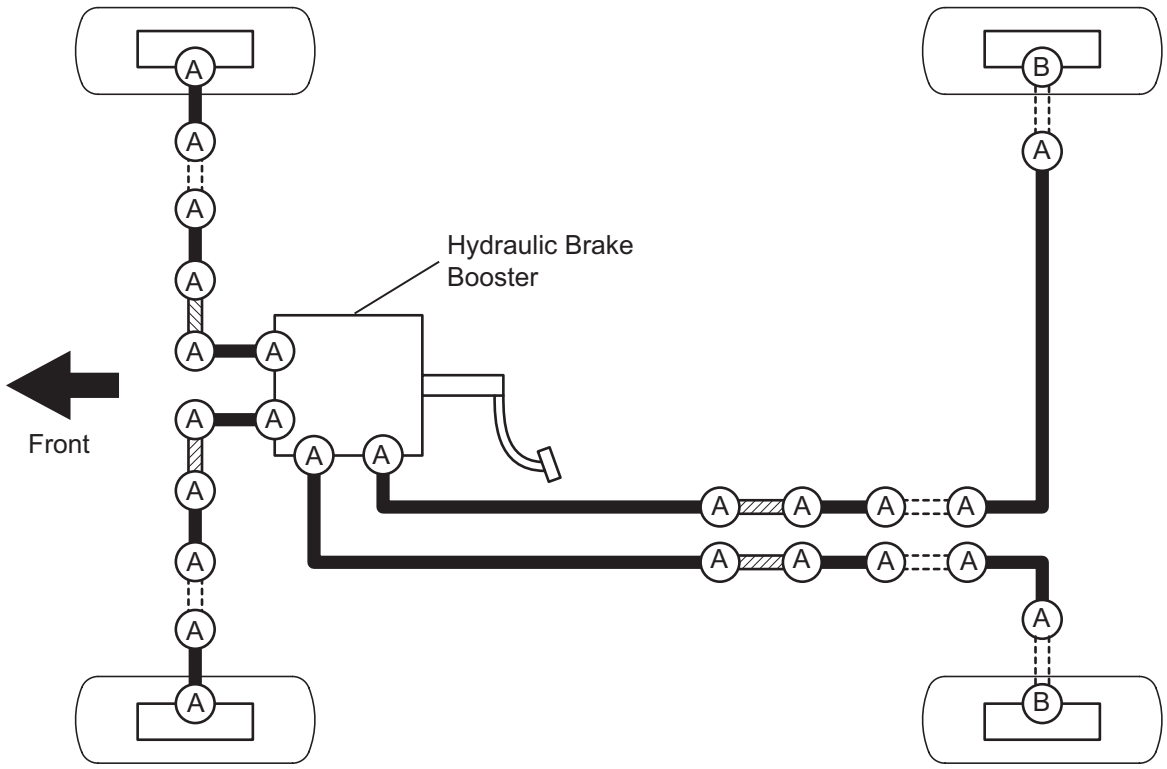

: Brake Tube

: Flexible Hose

: Brake Tube Way

Ⓐ : **for use without SST:**

Union Nut Torque: 15 N*m (155 kgf*cm, 11 ft*lbf)

for use with SST:

Union Nut Torque: 14 N*m (143 kgf*cm, 10 ft*lbf)

Ⓑ : Torque: 31 N*m (316 kgf*cm, 23 ft*lbf)

P

C133081E01

PROBLEM SYMPTOMS TABLE

HINT:
Use the table below to help you find the cause of the problem. The numbers indicate the ranked order of probability of each of the possible causes. Check each part in the order suggested. If necessary, replace these applicable parts.

Symptom	Suspected area	See page
Low pedal or spongy pedal	1. Fluid leakage in brake system	-
	2. Air in brake system	BR-5
	3. Piston seal (Worn or damaged) (Front brake)	BR-43
	4. Piston seal (Worn or damaged) (Rear brake)	BR-43
	5. Hydraulic brake booster (Faulty)	BR-30
Brake drag	1. Brake pedal free play (Minimum)	BR-10
	2. Parking brake lever travel (Out of adjustment)	PB-4
	3. Parking brake wire (Sticking)	PB-11
	4. Parking brake (Shoe clearance out of adjustment)	PB-20
	5. Pad (Cracked or distorted) (Front brake)	BR-43
	6. Pad (Cracked or distorted) (Rear brake)	BR-51
	7. Piston (Stuck) (Front brake)	BR-43
	8. Piston (Stuck) (Rear brake)	BR-51
	9. Piston (Frozen) (Front brake)	BR-43
	10. Piston (Frozen) (Rear brake)	BR-51
	11. Tension or return spring (Faulty)	PB-17
	12. Hydraulic brake booster (Faulty)	BR-30
Brake pull	1. Piston (Stuck) (Front brake)	BR-43
	2. Piston (Stuck) (Rear brake)	BR-51
	3. Pad (Oily) (Front brake)	BR-43
	4. Pad (Oily) (Rear brake)	BR-51
	5. Piston (Frozen) (Front brake)	BR-43
	6. Piston (Frozen) (Rear brake)	BR-51
	7. Front disc (Scored)	BR-44
	8. Rear disc (Scored)	BR-52
	9. Pad (Cracked or distorted) (Front brake)	BR-43
	10. Pad (Cracked or distorted) (Rear brake)	BR-51
	11. Hydraulic brake booster (Faulty)	BR-30
Firm pedal but braking inefficient	1. Fluid leakage in brake system	-
	2. Air in brake system	BR-5
	3. Pad (Worn) (Front brake)	BR-43
	4. Pad (Worn) (Rear brake)	BR-51
	5. Pad (Cracked or distorted) (Front brake)	BR-43
	6. Pad (Cracked or distorted) (Rear brake)	BR-51
	7. Pad (Oily) (Front brake)	BR-43
	8. Pad (Oily) (Rear brake)	BR-51
	9. Pad (Glazed) (Front brake)	BR-43
	10. Pad (Glazed) (Rear brake)	BR-51
	11. Front disc (Scored)	BR-44
	12. Rear disc (Scored)	BR-52
	13. Hydraulic brake booster (Faulty)	BR-30

Symptom	Suspected area	See page
Noise from brakes	1. Pad (Cracked or distorted) (Front brake)	BR-43
	2. Pad (Cracked or distorted) (Rear brake)	BR-51
	3. Installation bolt (Loose)	BR-50
	4. Front disc (Scored)	BR-44
	5. Rear disc (Scored)	BR-52
	6. Pad support plate (Loose)	BR-50
	7. Sliding pin (Worn)	BR-50
	8. Pad (Dirty) (Front brake)	BR-43
	9. Pad (Dirty) (Rear brake)	BR-51
	10. Pad (Glazed) (Front brake)	BR-43
	11 Pad (Glazed) (Rear brake)	BR-51
	12. Tension or return spring (Faulty)	PB-17
	13. Anti-squeal shim (Damaged) (Front brake)	BR-42
	14. Anti-squeal shim (Damaged) (Rear brake)	BR-50
	15. Shoe hold-down spring (Damaged)	PB-17
Noise from hydraulic brake booster (Abnormal pump motor operation noise)	1. Accumulator bracket clearance (Out of adjustment)	BR-30
Brake warning light illuminates (Parking brake lever released)	1. Brake fluid level	BR-19
	2. Brake master cylinder power supply system (Faulty)	BR-30
Brake warning light illuminates and skid control buzzer sounds	1. Brake master cylinder power supply system (Faulty)	BR-30
ABS warning light illuminates	1. Anti-lock brake system (Faulty)	-
	2. Brake master cylinder power supply system (Faulty)	BR-30

BRAKE FLUID

BLEEDING

NOTICE:

- **Immediately wash off any brake fluid that comes into contact with any painted surfaces.**
- **Depressing the brake pedal with the reservoir cap removed will cause the fluid to spray.**

HINT:

- If any work is done on the brake system or if air in the brake lines is suspected, bleed the air from the system.
- When bleeding, maintain the amount of fluid in the reservoir between the Min. and Max. lines.

1. FILL RESERVOIR WITH BRAKE FLUID

Fluid:

SAE J1703 or FMVSS NO. 116 DOT3

2. BLEED BRAKE BOOSTER WITH ACCUMULATOR PUMP ASSEMBLY

HINT:

If the brake master cylinder is disassembled, the brake line is disconnected from the brake master cylinder or if the reservoir becomes empty, bleed the brake master cylinder.

(a) Turn the ignition switch to ON, and wait until the pump motor has stopped (step A).

HINT:

Pump operating sound can be heard.

(b) Turn the ignition switch to OFF, and depress the brake pedal more than 20 times (step B).

HINT:

When pressure in the accumulator is released, the reaction force becomes lighter and the stroke becomes longer.

(c) Repeat steps A and B 5 times (step C).

(d) Turn the ignition switch to ON, and check that the pump stops after approximately 8 to 14 seconds.

NOTICE:

If the pump does not stop, repeat step C again.

3. BLEED BRAKE LINE

(a) Turn the ignition switch to ON, and wait until the pump motor has stopped.

HINT:

Pump operating sound can be heard.

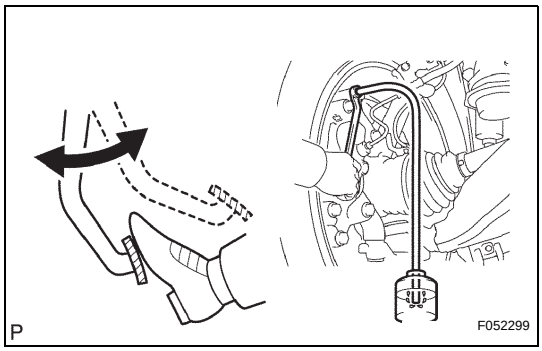

(b) Front brake line.
(1) Connect the vinyl tube to the brake caliper.
(2) Depress the brake pedal several times, then loosen the bleeder plug with the pedal held down (step D).
(3) At the point when the fluid stops coming out, tighten the bleeder plug, then release the brake pedal (step E).
(4) Repeat steps D and E until all the air in the fluid has been bled out.
Torque: 11 N*m (110 kgf*cm, 8 ft.*lbf)
(5) Repeat the above procedures to bleed the other brake line.

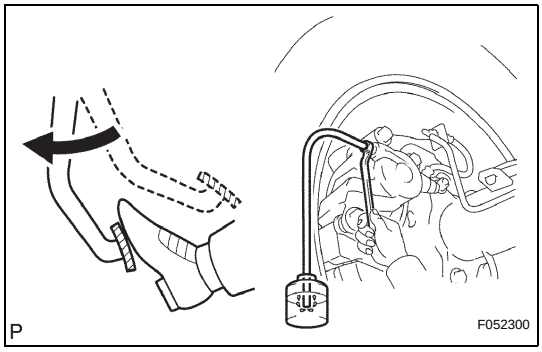

(c) Rear brake line.
(1) Connect the vinyl tube to the brake caliper.
(2) Depress the brake pedal, hold it, and then loosen the bleeder plug.
HINT:
Brake fluid is pumped out automatically.
(3) Loosen the bleeder plug and release the air.
NOTICE:
Keep the brake fluid in the reservoir tank above the MIN line during the above procedures.
(4) When the air is completely bled out of the brake fluid through the bleeder plug, tighten the bleeder plug.
Torque: 11 N*m (110 kgf*cm, 8 ft.*lbf)
(5) Repeat the above procedures to bleed the other brake line.

4. BLEED MASTER CYLINDER SOLENOID

HINT:
If the brake master cylinder is disassembled, the brake line is disconnected from the brake master cylinder or if the reservoir becomes empty, bleed the brake master cylinder.

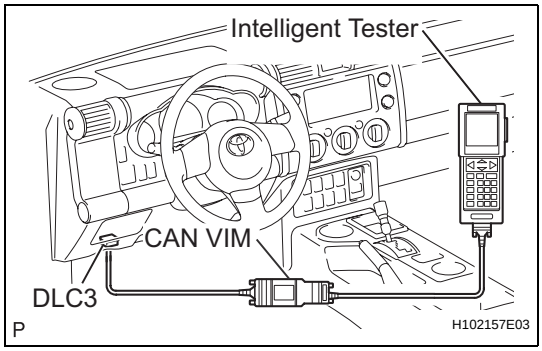

(a) Connect the intelligent tester to the DLC3.
(b) Turn the ignition switch to ON.
(c) Select "ACTIVE TEST" mode on the intelligent tester.
(d) Connect the vinyl tube to the rear brake caliper.
(e) Loosen the bleeder plug.
(f) Select "SRMF" to drive the solenoids and bleed air from the rear brake caliper (step F).
NOTICE:
- **Do not depress the brake pedal.**
- **Keep the brake fluid in the reservoir tank above the MIN line during the above procedures.**

HINT:
- Brake fluid is sent through the pump.

- To protect the solenoids, the intelligent tester turns OFF automatically 2 seconds after every solenoid has been turned ON.

(g) Repeat step F until all the air in the brake fluid is bled out.
(h) When the air is completely bled out of the brake fluid through the bleeder plug, tighten the bleeder plug.
Torque: 11 N*m (110 kgf*cm, 8 ft.*lbf)
(i) Repeat the above procedures to bleed the other brake line.
(j) Turn the ignition switch to OFF.
(k) Turn the ignition switch to ON.
(l) Clear DTC (see page BC-45).

5. CHECK FLUID LEVEL IN RESERVOIR

(a) Turn the ignition switch to OFF, and depress the brake pedal more than 20 times (until the pedal reaction feels light and pedal stroke becomes longer), and adjust the fluid level to the MAX level.
(b) When the ignition switch is turned to ON, brake fluid is sent to the accumulator and the fluid level decreases by approximately 5 mm from the level when the ignition switch is OFF (normal).

BRAKE PEDAL

COMPONENTS

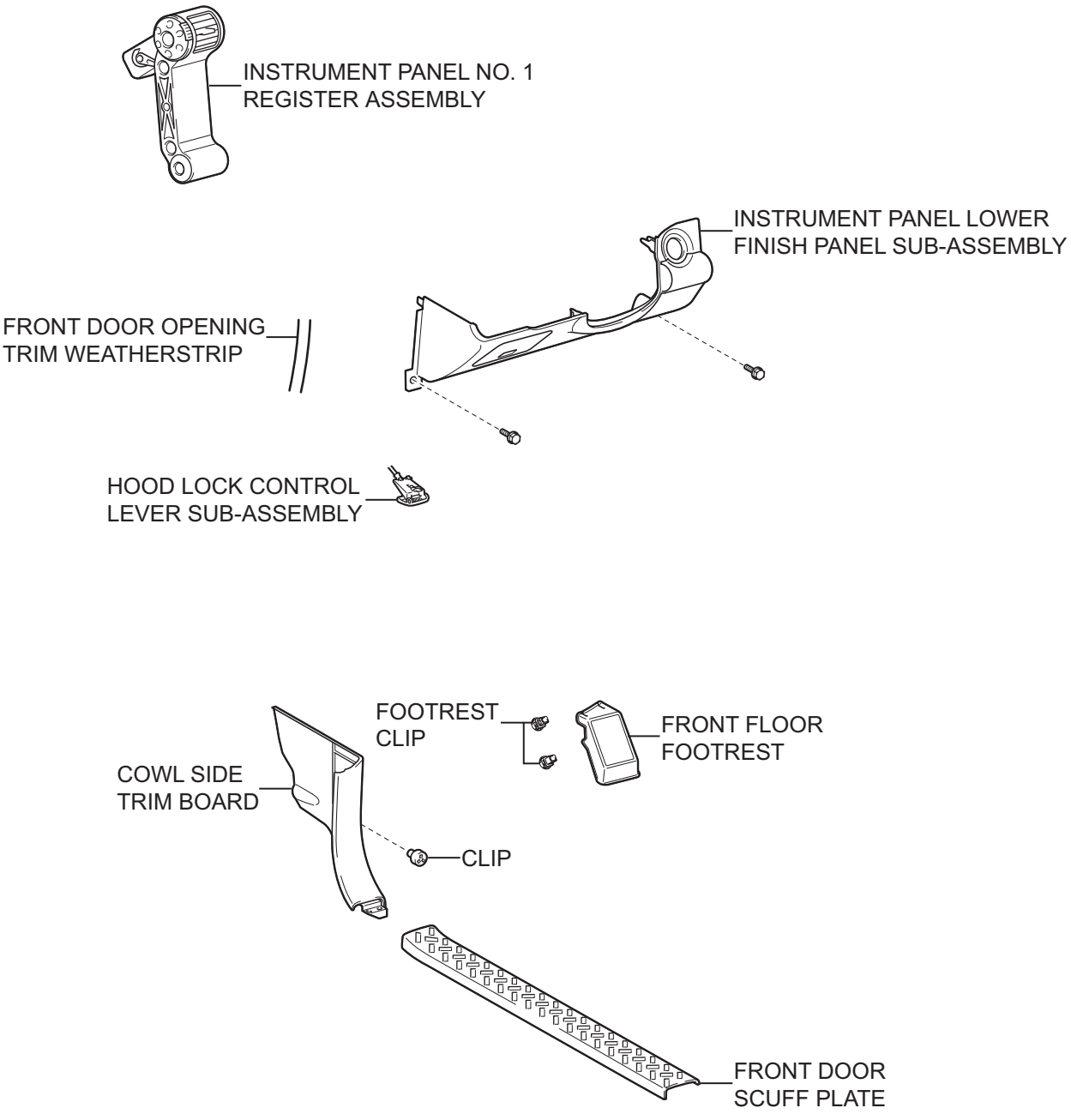

P

C133076E01

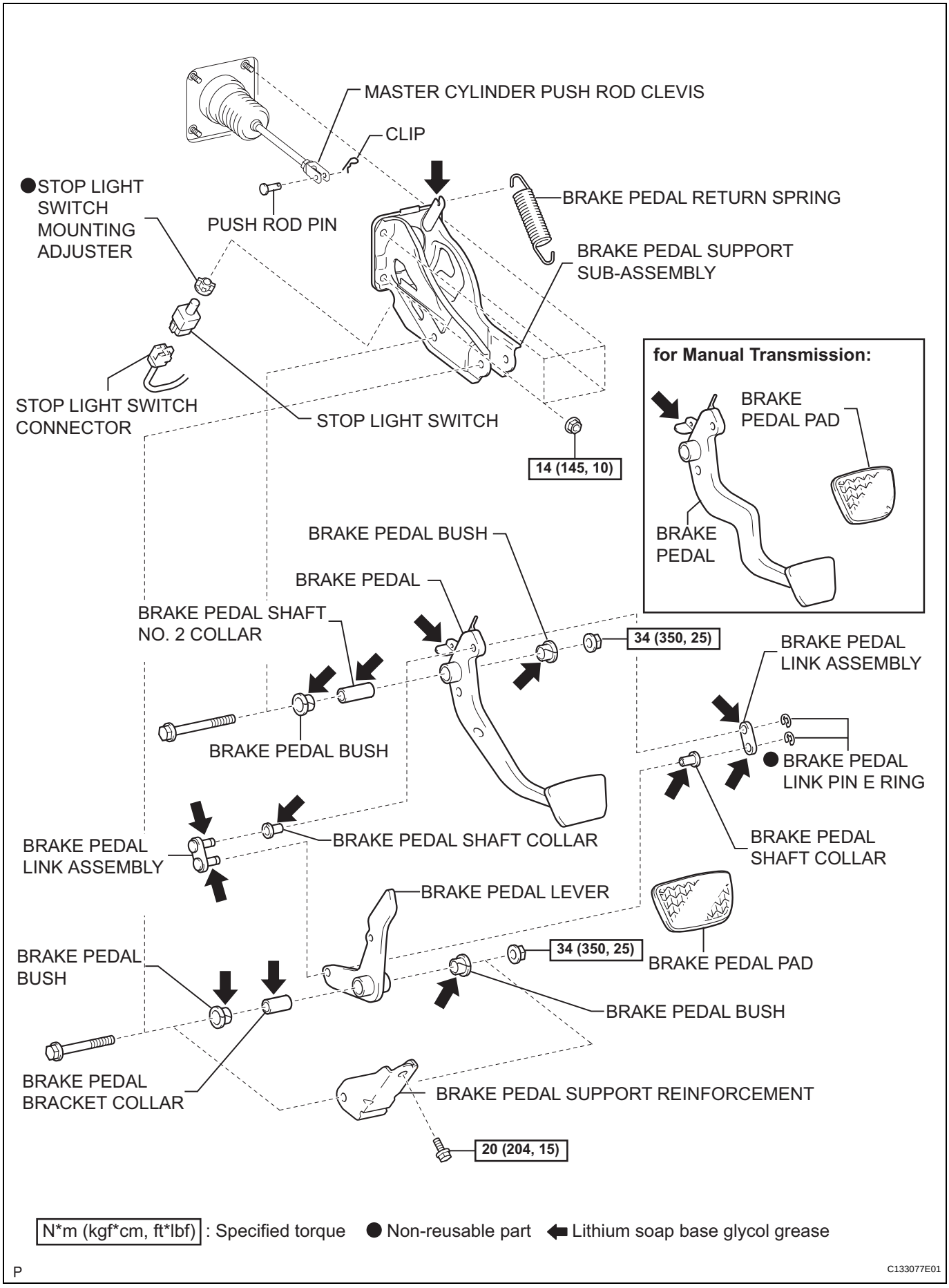

N*m (kgf*cm, ft*lbf) : Specified torque ● Non-reusable part ⬅ Lithium soap base glycol grease

P

C133077E01

BR

ON-VEHICLE INSPECTION

1. INSPECT AND ADJUST BRAKE PEDAL

(a) Inspect the brake pedal height.
Pedal height from dash panel:
168.7 to 178.7 mm (6.642 to 7.035 in.)
If the pedal height is incorrect, adjust the rod operating adapter length.

(b) Adjust the brake pedal height.

(1) Disconnect the connector from the stop light switch.

(2) Turn the stop light switch counterclockwise, and remove the stop light switch.

(3) Remove the hydraulic brake booster (See page BR-28).

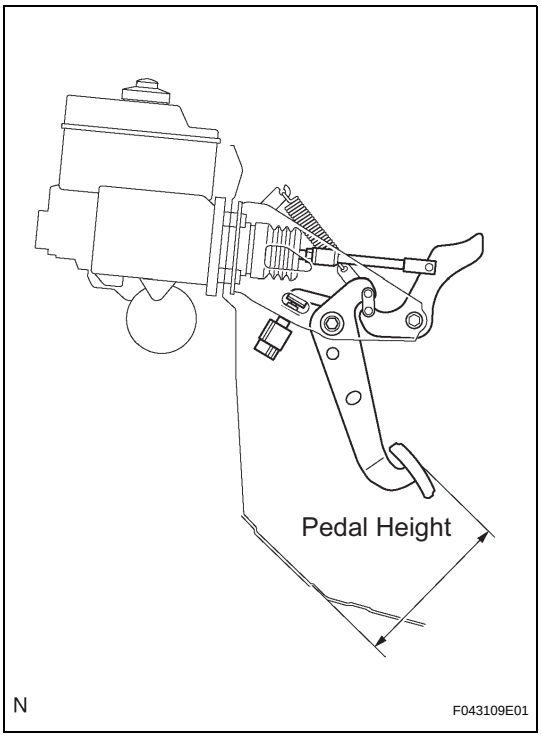

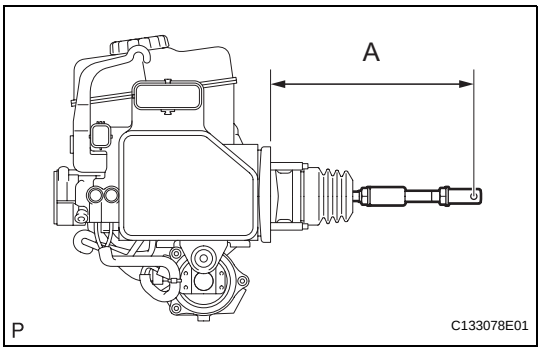

(4) Loosen the clevis lock nut.

(5) Adjust the rod operating adapter length by turning the pedal push rod clevis.
Rod operating adapter length A:
201.7 to 202.7 mm (7.941 to 7.980 in.)

(6) Tighten the clevis lock nut.
Torque: 26 N*m (260 kgf*cm, 19 ft.*lbf)

(7) Install the hydraulic brake booster (See page BR-38).

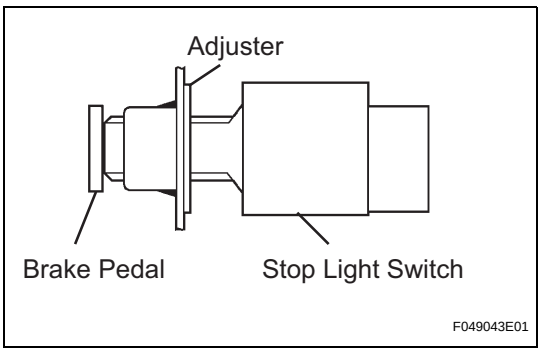

(8) Insert the stop light switch into the adjuster until it just touches the brake pedal.
NOTICE:
Do not depress the brake pedal.

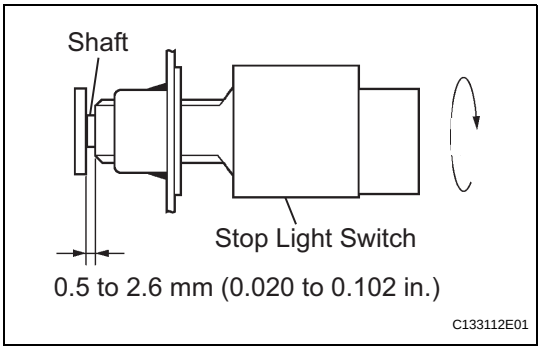

(9) Make a quarter turn clockwise to install the stop light switch.
NOTICE:
Do not depress the brake pedal.
HINT:
The turning torque for installing the stop light switch:
Torque: 1.5 N*m (15 kgf*cm, 13 in.*lbf) or less

(10) Check the stop light switch clearance.
Stop light switch clearance:
0.5 to 2.6 mm (0.020 to 0.102 in.)
(11) Connect the connector to the stop light switch.

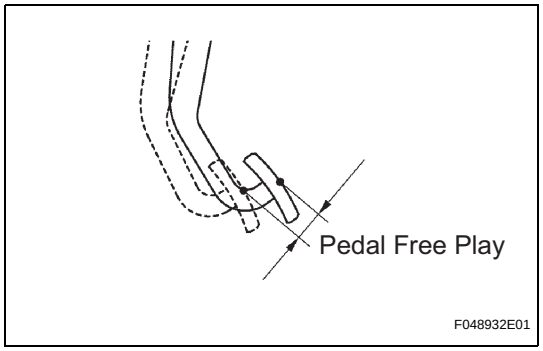

(c) Inspect the brake pedal free play.
(1) Stop the engine and depress the brake pedal several times until there is no vacuum left in the booster.
(2) Push in the pedal until the beginning of the resistance is felt. Measure the distance as shown.
Pedal free play:
1.0 to 6.0 mm (0.039 to 0.236 in.)
If incorrect, troubleshoot the brake system.

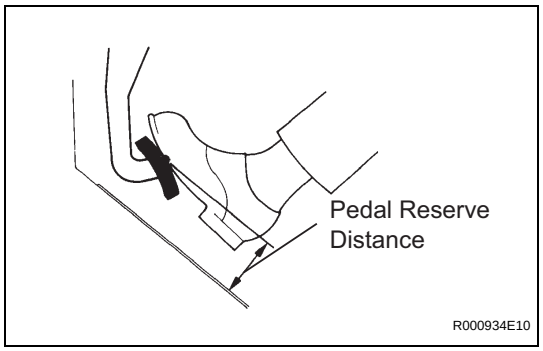

(d) Inspect the brake pedal reserve distance.
(1) Release the parking brake pedal.
With the engine running, depress the pedal and measure the pedal reserve distance as shown.
Pedal reserve distance from asphalt sheet at 490 N (50 kgf, 110.2 lbf):
More than 56 mm (2.20 in.)
If incorrect, troubleshoot the brake system.

BR

REMOVAL

1. **DISCONNECT CABLE FROM NEGATIVE BATTERY TERMINAL**
2. **REMOVE FRONT DOOR SCUFF PLATE (See page IR-15)**
3. **REMOVE FRONT FLOOR FOOTREST (See page IR-2)**
4. **REMOVE FOOTREST CLIP (See page IR-2)**
5. **REMOVE COWL SIDE TRIM BOARD (See page IR-15)**
6. **SEPARATE FRONT DOOR OPENING TRIM WEATHERSTRIP (See page IP-10)**
7. **REMOVE INSTRUMENT PANEL NO. 1 REGISTER ASSEMBLY (See page IP-13)**
8. **SEPARATE HOOD LOCK CONTROL LEVER SUB-ASSEMBLY (See page IP-13)**
9. **REMOVE INSTRUMENT PANEL LOWER FINISH PANEL SUB-ASSEMBLY (See page IP-14)**
10. **REMOVE STOP LIGHT SWITCH**
    (a) Disconnect the stop light switch connector from the stop light switch.
    (b) Turn the stop light switch counterclockwise and remove the stop light switch.
11. **SEPARATE MASTER CYLINDER PUSH ROD CLEVIS**
    (a) Remove the clip and push rod pin and separate the push rod clevis.

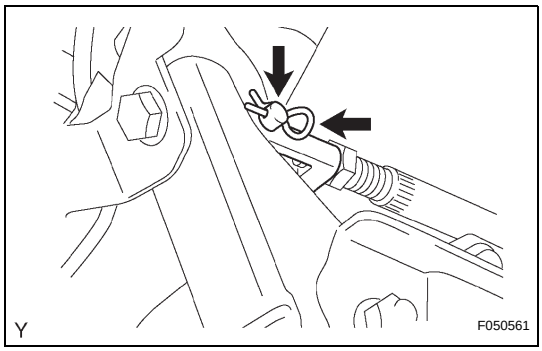

12. **REMOVE BRAKE PEDAL SUPPORT REINFORCEMENT**
    (a) Remove the bolt.
    (b) Remove the bolt and nut and remove the reinforcement from the brake pedal support.

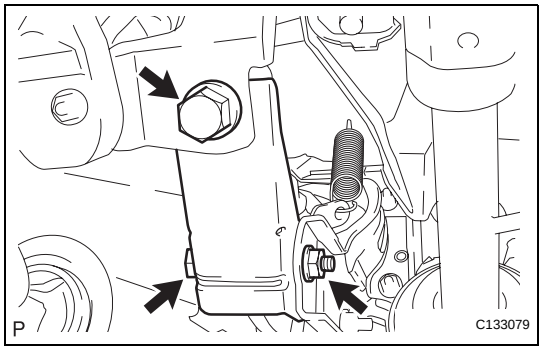

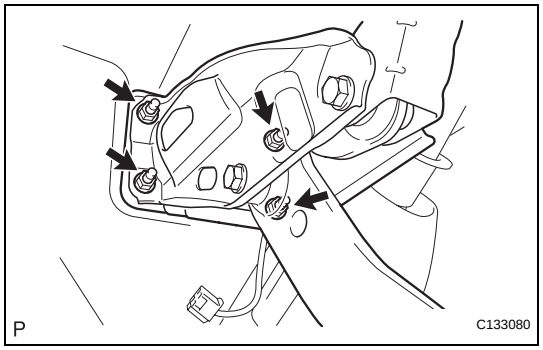

13. REMOVE BRAKE PEDAL SUPPORT SUB-ASSEMBLY

(a) Remove the 4 nuts and the brake pedal support.

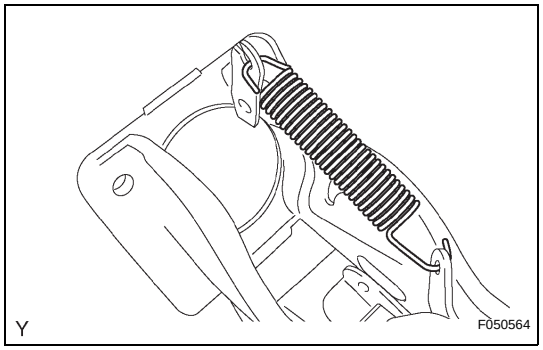

14. REMOVE BRAKE PEDAL RETURN SPRING

(a) Remove the return spring from the brake pedal support and brake pedal.

15. REMOVE STOP LIGHT SWITCH MOUNTING ADJUSTER

(a) Remove the stop light switch mounting adjuster from the brake pedal support.

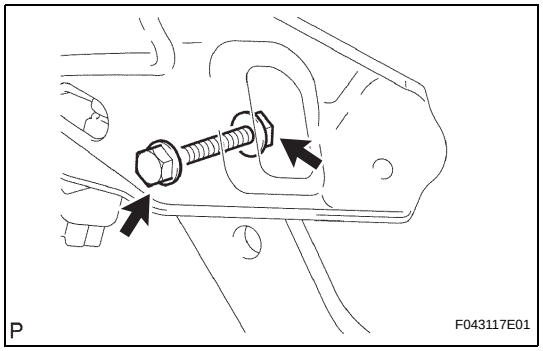

16. REMOVE BRAKE PEDAL

(a) Remove the bolt and nut and remove the brake pedal and brake pedal lever from the brake pedal support.

(b) Remove the 4 brake pedal bushes from the brake pedal and brake pedal lever.

(c) Remove the 2 collars from the brake pedal and brake pedal lever.

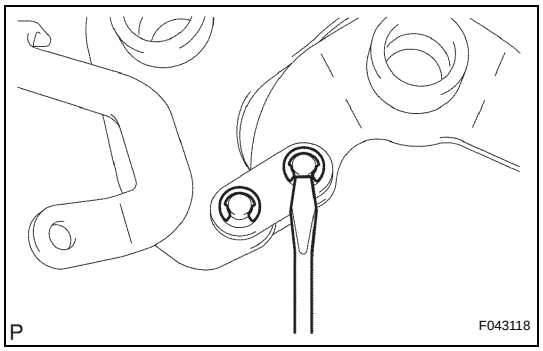

17. REMOVE BRAKE PEDAL LEVER

(a) Using a screwdriver, remove the 2 E-rings from the brake pedal link.

(b) Remove the 2 brake pedal links and the brake pedal lever.

(c) Remove the 2 brake pedal shaft collars from the brake pedal and brake pedal lever.

18. REMOVE BRAKE PEDAL PAD

(a) Remove the brake pedal pad from the brake pedal.

INSTALLATION

1. INSTALL BRAKE PEDAL PAD

(a) Install the brake pedal pad onto the brake pedal.

2. INSTALL BRAKE PEDAL LEVER

(a) Apply lithium soap base glycol grease to the 2 brake pedal links and 2 brake pedal shaft collars.

(b) Install the 2 brake pedal shaft collars into the brake pedal and brake pedal lever.

(c) Install the brake pedal lever with the 2 brake pedal links onto the brake pedal.

(d) Install 2 new E-rings onto the brake pedal link.

3. INSTALL BRAKE PEDAL

(a) Apply lithium soap base glycol grease to the 2 collars and 4 brake pedal bushes.

(b) Install the 2 collars and 4 brake pedal bushes onto the brake pedal and brake pedal lever.

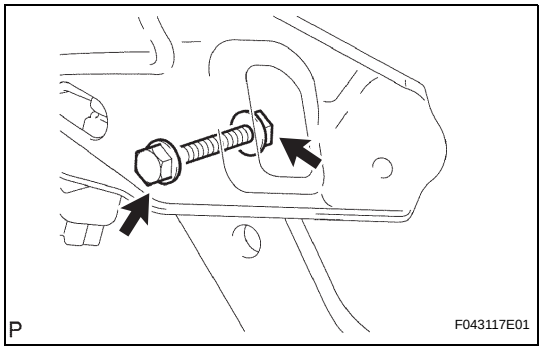

(c) Install the brake pedal onto the brake pedal support with the bolt and nut.
Torque: 34 N*m (350 kgf*cm, 25 ft.*lbf)

4. INSTALL STOP LIGHT SWITCH MOUNTING ADJUSTER

(a) Install a new stop light switch mounting adjuster onto the pedal support.

5. INSTALL BRAKE PEDAL RETURN SPRING

(a) Apply lithium soap base glycol grease to the inner surface of the hole in the brake pedal support and brake pedal.

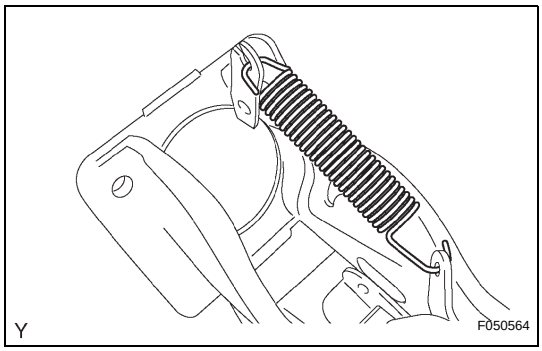

(b) Install the return spring onto the brake pedal support and brake pedal.

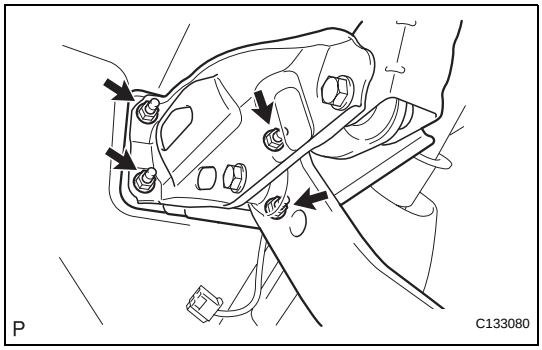

6. INSTALL BRAKE PEDAL SUPPORT SUB-ASSEMBLY

(a) Install the 4 nuts and the brake pedal support.
Torque: 14 N*m (145 kgf*cm, 10 ft.*lbf)

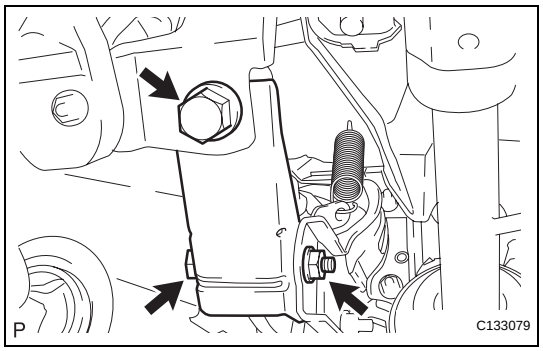

7. INSTALL BRAKE PEDAL SUPPORT REINFORCEMENT

(a) Provisionally install the reinforcement onto the brake pedal support with the bolt and nut.

(b) Install the reinforcement with the bolt.
Torque: 20 N*m (204 kgf*cm, 15 ft.*lbf)

(c) Fully tighten the bolt and nut.
Torque: 34 N*m (350 kgf*cm, 25 ft.*lbf)

8. INSTALL MASTER CYLINDER PUSH ROD CLEVIS

(a) Apply lithium soap base glycol grease to the inner surface of the hole in the brake pedal lever.

(b) Install the push rod clevis onto the brake pedal lever with the push rod pin and clip.

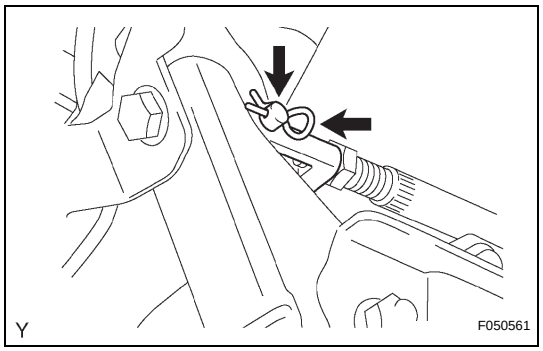

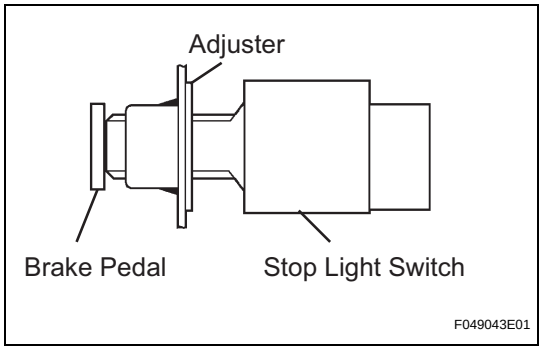

9. INSTALL STOP LIGHT SWITCH

(a) Insert the stop light switch into the adjuster until it just touches the brake pedal.
NOTICE:
Do not depress the brake pedal.

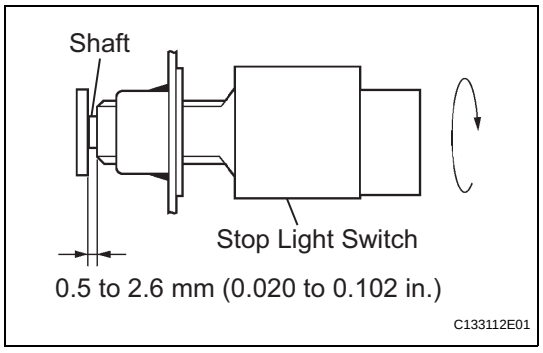

(b) Make a quarter turn clockwise to install the stop light switch.
NOTICE:
Do not depress the brake pedal.
HINT:
The turning torque for installing the stop light switch:
Torque: 1.5 N*m (15 kgf*cm, 13 in.*lbf) or less

(c) Check the stop light switch clearance.
Stop light switch clearance:
0.5 to 2.6 mm (0.020 to 0.102 in.)

(d) Connect the connector to the stop light switch.

10. INSPECT AND ADJUST BRAKE PEDAL (See page BR-10)

11. INSTALL INSTRUMENT PANEL LOWER FINISH PANEL SUB-ASSEMBLY (See page IP-29)

12. CONNECT HOOD LOCK CONTROL LEVER SUB-ASSEMBLY (See page IP-30)

13. INSTALL INSTRUMENT PANEL NO. 1 REGISTER ASSEMBLY (See page IP-30)

14. **INSTALL FRONT DOOR OPENING TRIM WEATHERSTRIP (See page IP-33)**
15. **INSTALL COWL SIDE TRIM BOARD (See page IR-45)**
16. **INSTALL FOOTREST CLIP (See page IR-2)**
17. **INSTALL FRONT FLOOR FOOTREST (See page IR-2)**
18. **INSTALL FRONT DOOR SCUFF PLATE (See page IR-45)**
19. **CONNECT CABLE TO NEGATIVE BATTERY TERMINAL**
    Torque: 3.9 N*m (40 kgf*cm, 35 in.*lbf)

HYDRAULIC BRAKE BOOSTER

COMPONENTS

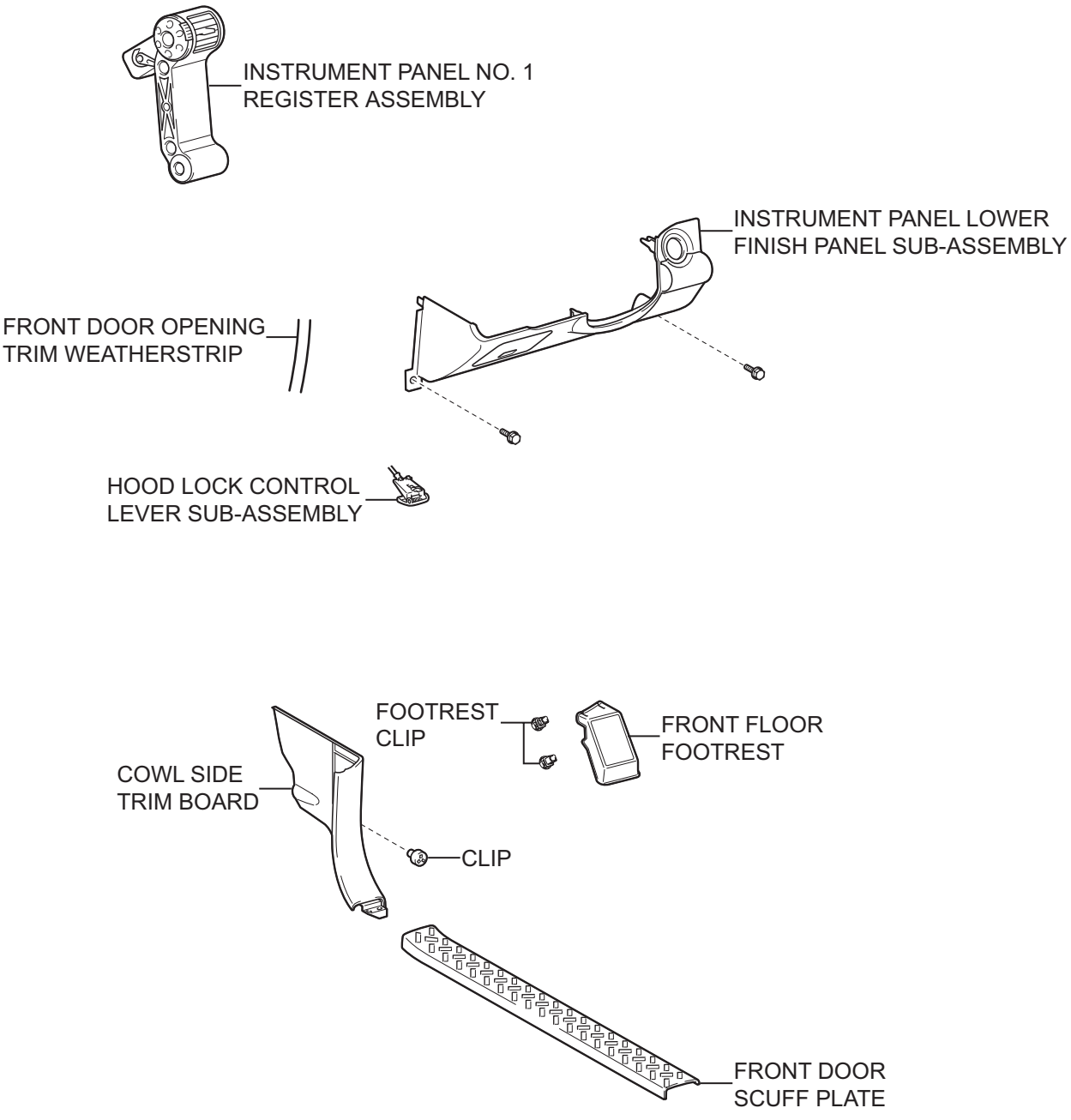

P

C133076E01

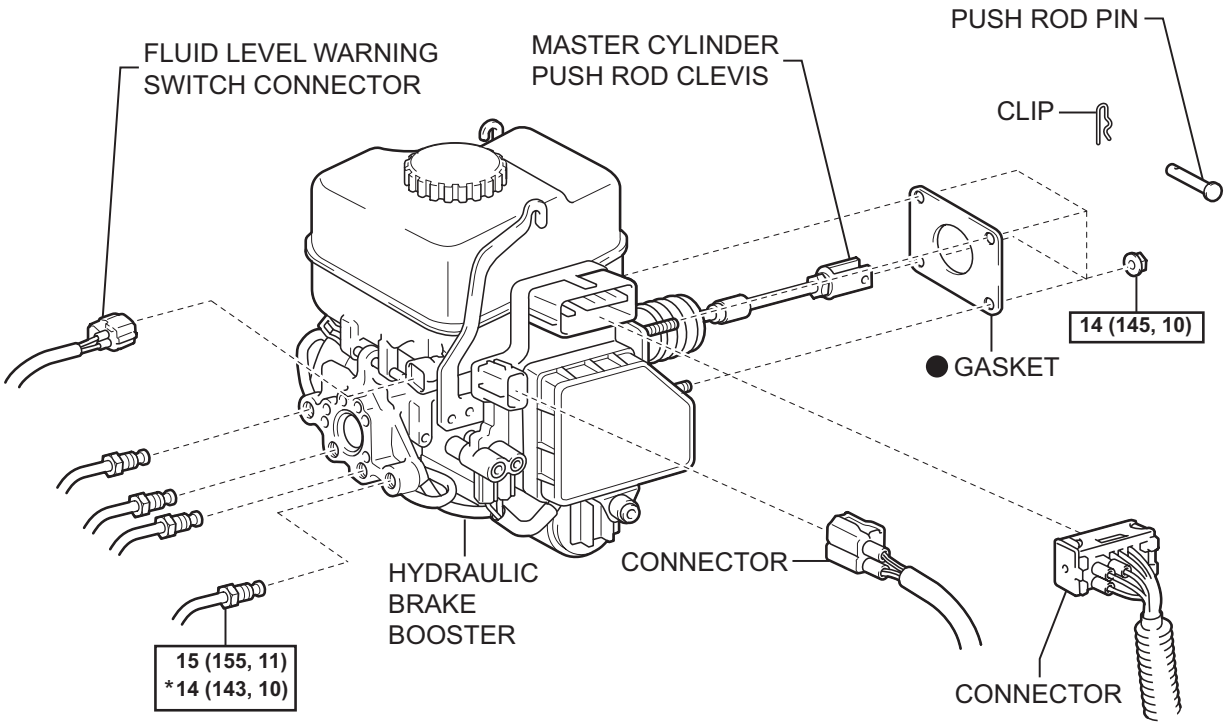

N*m (kgf*cm, ft*lbf) : Specified torque

● Non-reusable part

* For use with SST

P

C133082E01

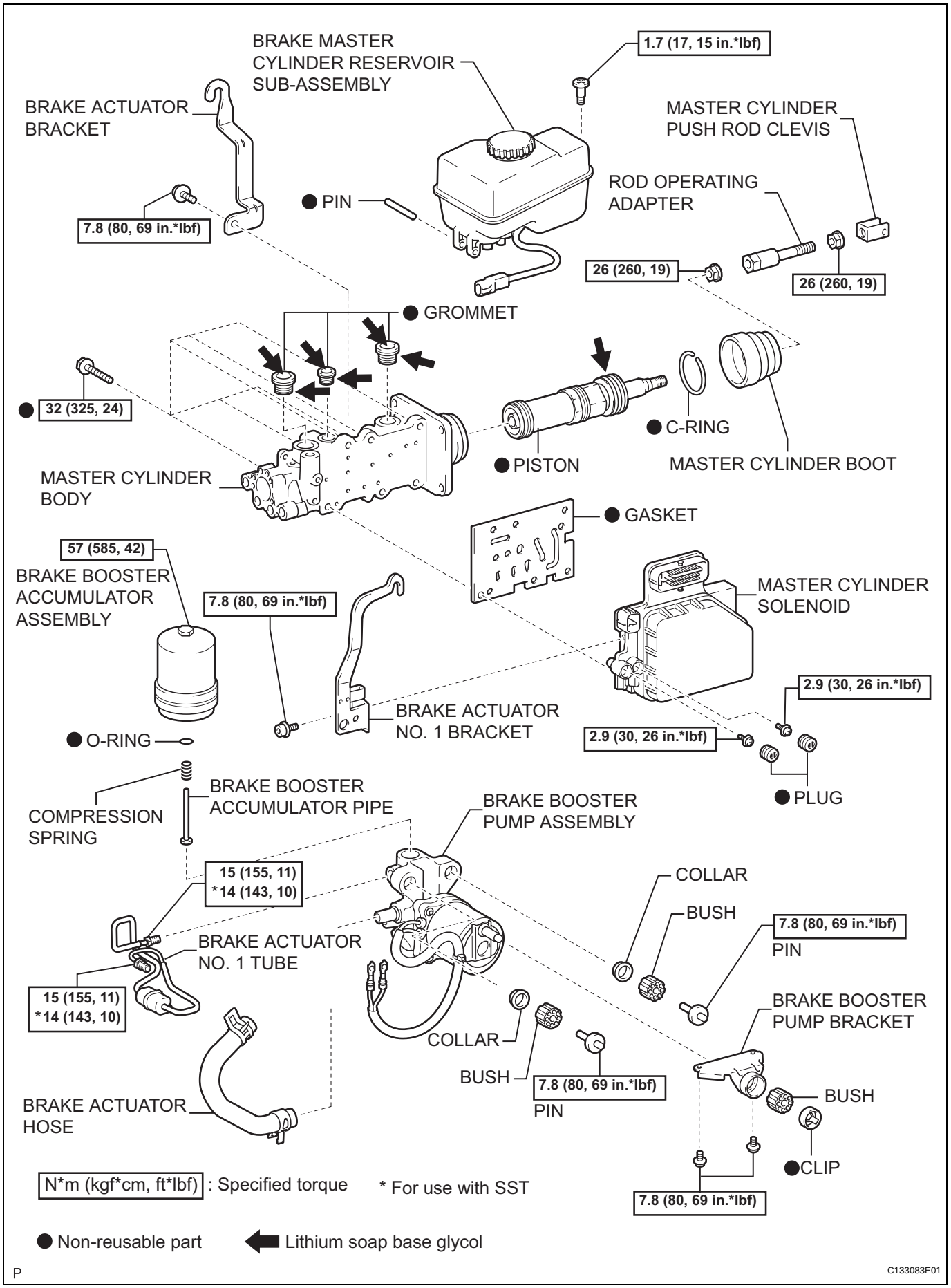
BRAKE MASTER CYLINDER RESERVOIR SUB-ASSEMBLY
1.7 (17, 15 in.*lbf)
BRAKE ACTUATOR BRACKET
MASTER CYLINDER PUSH ROD CLEVIS
PIN
ROD OPERATING ADAPTER
7.8 (80, 69 in.*lbf)
26 (260, 19)
26 (260, 19)
GROMMET
32 (325, 24)
C-RING
PISTON
MASTER CYLINDER BOOT
MASTER CYLINDER BODY
GASKET
57 (585, 42)
BRAKE BOOSTER ACCUMULATOR ASSEMBLY
7.8 (80, 69 in.*lbf)
MASTER CYLINDER SOLENOID
2.9 (30, 26 in.*lbf)
BRAKE ACTUATOR NO. 1 BRACKET
2.9 (30, 26 in.*lbf)
O-RING
PLUG
COMPRESSION SPRING
BRAKE BOOSTER ACCUMULATOR PIPE
BRAKE BOOSTER PUMP ASSEMBLY
15 (155, 11)
*14 (143, 10)
COLLAR
BUSH
7.8 (80, 69 in.*lbf)
PIN
BRAKE ACTUATOR NO. 1 TUBE
15 (155, 11)
*14 (143, 10)
BRAKE BOOSTER PUMP BRACKET
COLLAR
BUSH
7.8 (80, 69 in.*lbf)
PIN
BUSH
BRAKE ACTUATOR HOSE
CLIP
7.8 (80, 69 in.*lbf)
N*m (kgf*cm, ft*lbf) : Specified torque
* For use with SST
Non-reusable part
Lithium soap base glycol
P
C133083E01

ON-VEHICLE INSPECTION

1. INSPECT BRAKE MASTER CYLINDER FLUID PRESSURE CHANGE

(a) Inspect the positive battery voltage.
Standard voltage:
11 to 14 V

(b) Turn the ignition switch to OFF, and depress the brake pedal more than 20 times.
HINT:
When pressure in the accumulator is released, the reaction force becomes lighter and the stroke becomes longer.

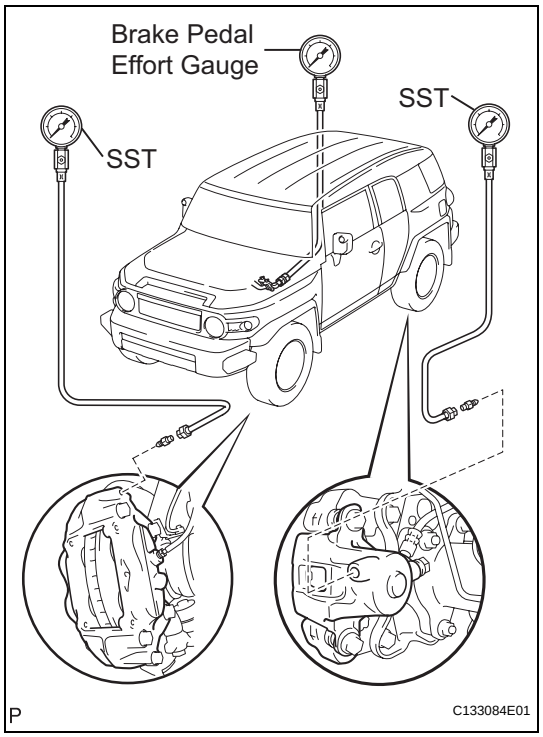

(c) Install a LSPV gauge (SST) and brake pedal effort gauge, and bleed the air.
SST 09709-29018

(d) When the booster does not operate:

(1) Depress the brake pedal and check the fluid pressure.
At 245 N (25 kgf, 55 lbf)

Front brake pressure	Rear brake pressure
3,150kPa (32.1 kgf/cm^2, 457 psi) or more	0 kPa (0 kgf/cm^2, 0 psi)

At 343 N (35 kgf, 77 lbf)

Front brake pressure	Rear brake pressure
4,540 kPa (46.3 kgf/cm^2, 659 psi) or more	0 kPa (0 kgf/cm^2, 0 psi)

(e) When the booster operates:

(1) Turn the ignition switch to ON, and wait until the pump motor has stopped (step A).
HINT:
Pump operating sound can be heard.

(2) Turn the ignition switch to OFF, and depress the brake pedal more than 20 times (step B).
HINT:
When the pressure in the accumulator is released, the reaction force becomes lighter and the stroke becomes longer.

(3) Repeat steps A and B 5 times (step C).

(4) Turn the ignition switch to ON, and check that the pump stops after approximately 8 to 14 seconds.
NOTICE:
If the pump does not stop, repeat step C again.

(5) Depress the brake pedal and check the fluid pressure.
At 49 N (5 kgf, 11 lbf)

Front brake pressure	Rear brake pressure
1,120 to 2,320 kPa (11.4 to 23.7 kgf/cm^2, 162 to 337 psi)	1,220 to 2,420 kPa (12.4 to 24.7kgf/cm^2, 177 to 351 psi)

BR

At 98 N (10 kgf, 22 lbf)

Front brake pressure	Rear brake pressure
3,840 to 5,040 kPa (39.2 to 51.4 kgf/cm^2, 557 to 731 psi)	3,990 to 5,190 kPa (40.7 to 52.9 kgf/cm^2, 579 to 753 psi)

At 147 N (15 kgf, 33 lbf)

Front brake pressure	Rear brake pressure
6,460 to 7,660 kPa (65.9 to 78.1 kgf/cm^2, 937 to 1,111 psi)	6,660 to 7,860 kPa (67.9 to 80.1 kgf/cm^2, 966 to 1,140 psi)

At 196 N (20 kgf, 44 lbf)

Front brake pressure	Rear brake pressure
8,720 to 9,920 kPa (88.9 to 101.2 kgf/cm^2, 1,265 to 1,439 psi)	11,330 to 12,530 kPa (115.5 to 127.8 kgf/cm^2, 1,644 to 1,818 psi)

2. INSPECT BRAKE MASTER CYLINDER OPERATION

(a) Inspect the positive battery voltage.
Standard voltage:
11 to 14 V

(b) Turn the ignition switch to OFF, and depress the brake pedal more than 20 times.
HINT:
When pressure in the accumulator is released, the reaction force becomes lighter and the stroke becomes longer.

(c) Check that the brake pedal becomes easy to depress.
If the pedal does not become easy to depress, check and replace the brake line and hydraulic brake booster.

(d) Turn the ignition switch to ON and check the pump motor operation noise.
If the pump motor does not operate, check and replace the wire harness and pump motor (see page BR-34).

(e) Connect the intelligent tester.
(1) Connect the intelligent tester to the DLC3.
(2) Turn the ignition switch to ON.
(3) Select "ACTIVE TEST" mode on the intelligent tester.
HINT:
- Refer to the intelligent tester operator manual for further details.
- To protect the solenoids, intelligent tester turns off automatically 2 seconds after every solenoid has been turned on.

(f) Check the master cylinder solenoid operation.

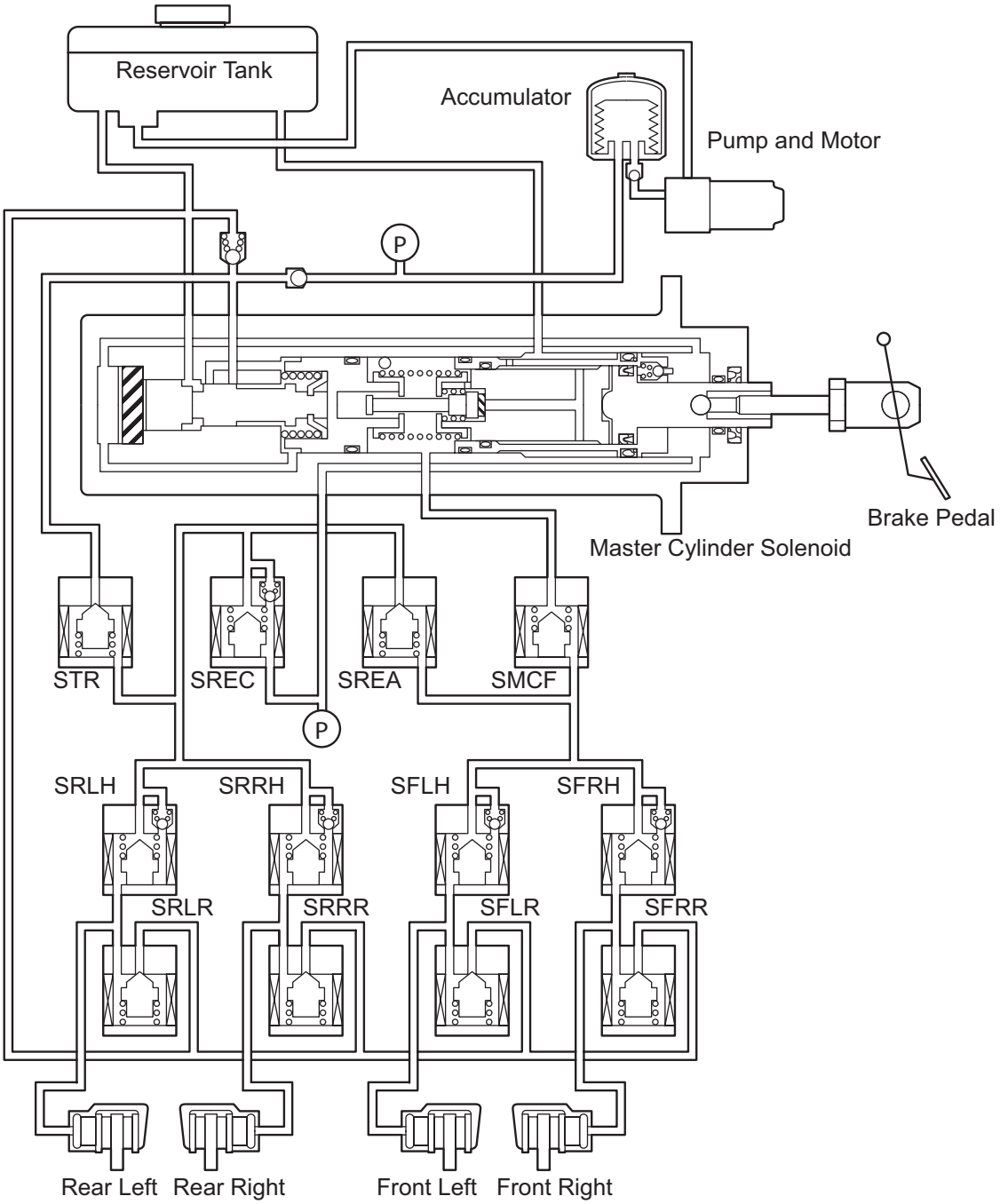

Inspection Order (Step)	SOL Selected By Active Test	SOL To Be Activated
D	SRCF (SA1)	SMCF
E	SFRH	SFRH

Inspection Order (Step)	SOL Selected By Active Test	SOL To Be Activated
F	SFLH	SFLH
G	SFRR	SFRR
H	SFLR	SFLR
I	SRMF (SMCF, SA3)	SREC
J	SRMR (SMCR, STR)	STR
K	SRRH	SRRH
L	SRLH	SRLH
M	SRRR	SRRR
N	SRLR	SRLR

(g) Prepare the vehicle.
  (1) Jack up and support the vehicle.
  (2) Release the parking brake lever.
  (3) Shift the shift lever to the "N" position and check the rear wheels by rotating them by hand.

(h) Inspect front VSC solenoid (SMCF) operation (step D).
  HINT:
  - ON: Activate SMCF and check that the brake pedal cannot be depressed (the pedal feels tight).
  - OFF: Deactivate SMCF and check that the brake pedal can be depressed.

  (1) Select "SRCF (SA1)" on the intelligent tester.
  (2) Turn the "SRCF (SA1)" on by the intelligent tester, then depress the brake pedal with stable force and check that the pedal cannot be depressed.
    If the pedal can be depressed, replace the hydraulic brake booster.
    HINT:
    To protect the solenoids, intelligent tester turns off automatically 2 seconds after every solenoid has been turned on.
    NOTICE:
    When operating it continuously, set the interval of more than 20 seconds.
  (3) Release the brake pedal.
  (4) When the solenoid is off, depress the brake pedal again and check that the brake pedal can be depressed.
    If the pedal cannot be depressed, replace the hydraulic brake booster.

(i) Inspect front ABS solenoid (SFRH) operation (step E).
  HINT:
  - ON: Activate SFRH, depress the brake pedal, and then check that the right front wheel rotates.
  - OFF: Deactivate SFRH, depress the brake pedal, and then check that the right front wheel does not rotate.

(1) Select "SFRH" on the intelligent tester.
(2) Turn the "SFRH" on by the intelligent tester, then depress the brake pedal with stable force.
(3) When the solenoid is on, check the right front wheel by rotating it by hand.
If the right front wheel stops, replace the hydraulic brake booster.
HINT:
- To protect the solenoid, intelligent tester turns off automatically 2 seconds after every solenoid has been turned on.
- When rotating the wheel fast, the fail-safe function is activated and judgement cannot be made properly. So rotate the wheel as slowly as possible.

NOTICE:
When operating it continuously, set the interval of more than 20 seconds.

(4) When the solenoid is off, depress the brake pedal again and check that the right front wheel does not rotate by hand.
If the right front wheel rotates, replace the hydraulic brake booster.

(j) Inspect front ABS solenoid (SFLH) operation (step F).
HINT:
- ON: Activate SFLH, depress the brake pedal, and then check that the left front wheel rotates.
- OFF: Deactivate SFLH, depress the brake pedal, and then check that the front left wheel does not rotate.

(1) Select "SFLH" on the intelligent tester.
(2) Turn the "SFLH" on by the intelligent tester, then depress the brake pedal with stable force.
(3) When the solenoid is on, check the left front wheel by rotating it by hand.
If the left front wheel stops, replace the hydraulic brake booster.
HINT:
- To protect the solenoid, intelligent tester turns off automatically 2 seconds after every solenoid has been turned on.
- When rotating the wheel fast, the fail-safe function is activated and judgement cannot be made properly. So rotate the wheel as slowly as possible.

NOTICE:
When operating it continuously, set the interval of more than 20 seconds.

(4) When the solenoid is off, depress the brake pedal again and check that the left front wheel does not rotate by hand.
If the left front wheel rotates, replace the hydraulic brake booster.

(k) Inspect front ABS solenoid (SFRR) operation (step G).
HINT:
- ON: Depress the brake pedal, activate SFRR, and then check that the right front wheel rotates.
- OFF: Deactivate SFRR, depress the brake pedal, and then check that the right front wheel does not rotate.

(1) Select "SFRR" on the intelligent tester.
(2) Depress the brake pedal with stable force, then turn the "SFRR" on by the intelligent tester.
(3) When the solenoid is on, check the right front wheel by rotating it by hand.
If the right front wheel stops, replace the hydraulic brake booster.
HINT:
- To protect the solenoids, intelligent tester turns off automatically 2 seconds after every solenoid has been turned on.
- When rotating the wheel fast, the fail-safe function is activated and judgement cannot be made properly. So rotate the wheel as slowly as possible.

NOTICE:
When operating it continuously, set the interval of more than 20 seconds.

(4) When the solenoid is off, depress the brake pedal again and check that the right front wheel does not rotate by hand.
If the right front wheel rotates, replace the hydraulic brake booster.

(l) Inspect front ABS solenoid (SFLR) operation (step H).
HINT:
- ON: Depress the brake pedal, activate SFLR, and then check that the left front wheel rotates.
- OFF: Deactivate SFLR, depress the brake pedal, and then check that the left front wheel does not rotate.

(1) Select "SFLR" on the intelligent tester.
(2) Depress the brake pedal with stable force, then turn the "SFLR" on by the intelligent tester.
(3) When the solenoid is on, check the left front wheel by rotating it by hand.
If the left front wheel stops, replace the hydraulic brake booster.
HINT:
- To protect the solenoids, intelligent tester turns off automatically 2 seconds after every solenoid has been turned on.
- When rotating the wheel fast, the fail-safe function is activated and judgement cannot be made properly. So rotate the wheel as slowly as possible.

NOTICE:
When operating it continuously, set the interval of more than 20 seconds.

(4) When the solenoid is off, depress the brake pedal again and check that the left front wheel does not rotate by hand.
If the left front wheel rotates, replace the hydraulic brake booster.

(m) Inspect rear VSC solenoid (SREC) operation (step I).
HINT:
- ON: Depress the brake pedal, activate SREC. Release the brake pedal and check that the rear wheels do not rotate.
- OFF: Deactivate SREC and check that the rear wheels rotate.

(1) Select "SRMF (SMCF, SA3)" on the intelligent tester.
(2) Depress the brake pedal with stable force, then turn the "SRMF (SMCF, SA3)" on by the intelligent tester.
(3) Release the brake pedal when the solenoid is on, and check that the rear wheels do not rotate by hand.
If the rear wheels rotate, replace the hydraulic brake booster.
HINT:
- To protect the solenoids, intelligent tester turns off automatically 2 seconds after every solenoid has been turned on.
- When rotating the wheels fast, the fail-safe function is activated and judgement cannot be made properly. So rotate the wheels as slowly as possible.

NOTICE:
When operating it continuously, set the interval of more than 20 seconds.

(4) When the solenoid is off, check the rear wheels by rotating them by hand.
If the rear wheels stop, replace the hydraulic brake booster.

(n) Inspect rear VSC solenoid (STR) operation (step J).
HINT:
- ON: Activate STR, depress the brake pedal, and then check that the rear wheels rotate.
- OFF: Deactivate STR, depress the brake pedal, and then check that the rear wheels do not rotate.

(1) Select "SRMR (SMCR, STR)" on the intelligent tester.
(2) Turn the "SRMR (SMCR, STR) on by the intelligent tester.

(3) When the solenoid is on, check that the rear wheels rotate by hand.
If the rear wheels do not rotate, replace the hydraulic brake booster.
HINT:
- To protect the solenoids, intelligent tester turns off automatically 2 seconds after every solenoid has been turned on.
- When rotating the wheels fast, the fail-safe function is activated and judgement cannot be made properly. So rotate the wheels as slowly as possible.

NOTICE:
When operating it continuously, set the interval of more than 20 seconds.

(4) When the "SRMR (SMCR, STR)" is off, depress the brake pedal again and check that the rear wheels do not rotate by hand.
If the rear wheels rotate, replace the hydraulic brake booster.

(o) Inspect rear ABS solenoid (SRRH) operation (step K).
HINT:
- ON: Activate SRRH, depress the brake pedal, and then check that the right rear wheel rotates.
- OFF: Deactivate SRRH, depress the brake pedal, and then check that the right rear wheel does not rotate.

(1) Select "SRRH" on the intelligent tester.
(2) Turn the "SRRH" on by the intelligent tester, then depress the brake pedal with stable force.
(3) When the solenoid is on, check the right rear wheel by rotating it by hand.
If the right rear wheel stops, replace the hydraulic brake booster.
HINT:
- To protect the solenoids, intelligent tester turns off automatically 2 seconds after every solenoid has been turned on.
- When rotating the wheel fast, the fail-safe function is activated and judgement cannot be made properly. So rotate the wheel as slowly as possible.

NOTICE:
When operating it continuously, set the interval of more than 20 seconds.

(4) When the solenoid is off, depress the brake pedal again and check that the right rear wheel does not rotate by hand.
If the right rear wheel rotates, replace the hydraulic brake booster.

(p) Inspect rear ABS solenoid (SRLH) operation (step L).
HINT:
- ON: Activate SRLH, depress the brake pedal, and then check that the left rear wheel rotates.
- OFF: Deactivate SRLH, depress the brake pedal, and then check that the left rear wheel does not rotate.

(1) Select "SRLH" on the intelligent tester.
(2) Turn the "SRLH" on by the intelligent tester, then depress the brake pedal with stable force.
(3) When the solenoid is on, check the left rear wheel by rotating it by hand.
If the left rear wheel stops, replace the hydraulic brake booster.
HINT:
- To protect the solenoid, intelligent tester turns off automatically 2 seconds after every solenoid has been turned on.
- When rotating the wheel fast, the fail-safe function is activated and judgement cannot be made properly. So rotate the wheel as slowly as possible.

NOTICE:
When operating it continuously, set the interval of more than 20 seconds.

(4) When the solenoid is off, depress the brake pedal again and check that the left rear wheel does not rotate by hand.
If the left rear wheel rotates, replace the hydraulic brake booster.

(q) Inspect rear ABS solenoid (SRRR) operation (step M).
HINT:
- ON: Depress the brake pedal, activate SRRR, and then check that the right rear wheel rotates.
- OFF: Deactivate SRRR, depress the brake pedal, and then check that the right rear wheel does not rotate.

(1) Select "SRRR" on the intelligent tester.
(2) Depress the brake pedal with stable force, then turn the "SRRR" on by the intelligent tester.
(3) When the solenoid is on, check the right rear wheel by rotating it by hand.
If the right rear wheel stops, replace the hydraulic brake booster.
HINT:
- To protect the solenoids, intelligent tester turns off automatically 2 seconds after every solenoid has been turned on.
- When rotating the wheel fast, the fail-safe function is activated and judgement cannot be made properly. So rotate the wheel as slowly as possible.

NOTICE:
When operating it continuously, set the interval of more than 20 seconds.

(4) When the solenoid is off, depress the brake pedal again and check that the right rear wheel does not rotate by hand.
If the right rear wheel rotates, replace the hydraulic brake booster.

BR

(r) Inspect rear ABS solenoid (SRLR) operation (step N).
HINT:
- ON: Depress the brake pedal, activate SRLR, and then check that the left rear wheel rotates.
- OFF: Deactivate SRLR, depress the brake pedal, and then check that the left rear wheel does not rotate.

(1) Select "SRLR" on the intelligent tester.
(2) Depress the brake pedal with stable force, then turn the "SRLR" on by the intelligent tester.
(3) When the solenoid is on, check the left rear wheel by rotating it by hand.
If the left rear wheel stops, replace the hydraulic brake booster.
HINT:
- To protect the solenoids, intelligent tester turns off automatically 2 seconds after every solenoid has been turned on.
- When rotating the wheel fast, the fail-safe function is activated and judgement cannot be made properly. So rotate the wheel as slowly as possible.

NOTICE:
When operating it continuously, set the interval of more than 20 seconds.

(4) When the solenoid is off, depress the brake pedal again and check that the left rear wheel does not rotate by hand.
If the left rear wheel rotates, replace the hydraulic brake booster.

(s) Lower the vehicle.
(t) Disconnect the intelligent tester.

REMOVAL

NOTICE:

- **Before starting the work, make sure that the ignition switch is OFF and depress the brake pedal more than 20 times.**
- **As high pressure is applied to the brake actuator No. 1 tube, never deform it.**
- **Do not turn the ignition switch to ON until the work is completed.**

HINT:

When the pressure in the accumulator is released, the reaction force becomes lighter and the stroke becomes longer.

1. **DISCONNECT CABLE FROM NEGATIVE BATTERY TERMINAL**
2. **DRAIN BRAKE FLUID**
   NOTICE:
   Immediately wash off any brake fluid that comes into contact with a painted surface.
3. **REMOVE FRONT DOOR SCUFF PLATE (See page IR-15)**
4. **REMOVE FRONT FLOOR FOOTREST (See page IR-2)**
5. **REMOVE FOOTREST CLIP (See page IR-2)**
6. **REMOVE COWL SIDE TRIM BOARD (See page IR-15)**
7. **SEPARATE FRONT DOOR OPENING TRIM WEATHERSTRIP (See page IP-10)**
8. **REMOVE INSTRUMENT PANEL NO. 1 REGISTER ASSEMBLY (See page IP-13)**
9. **SEPARATE HOOD LOCK CONTROL LEVER SUB-ASSEMBLY (See page IP-13)**
10. **REMOVE INSTRUMENT PANEL LOWER FINISH PANEL SUB-ASSEMBLY (See page IP-14)**
11. **SEPARATE MASTER CYLINDER PUSH ROD CLEVIS (See page BR-12)**

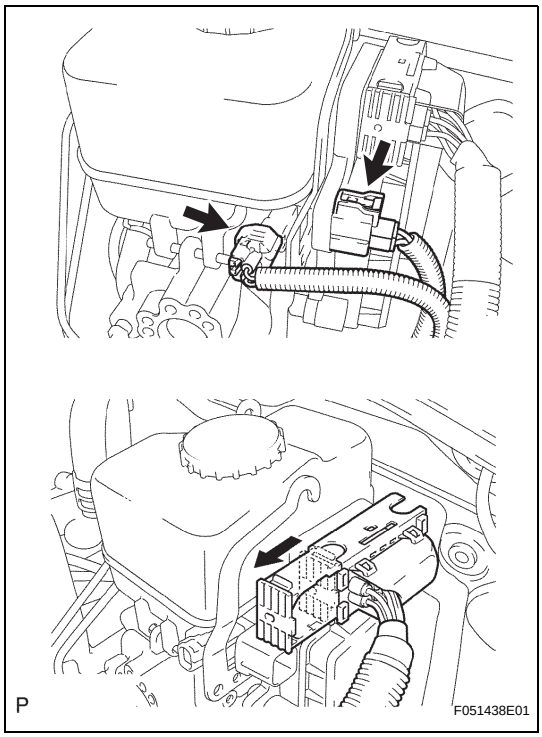

12. REMOVE HYDRAULIC BRAKE BOOSTER

(a) Disconnect the 3 connectors from the hydraulic brake booster.

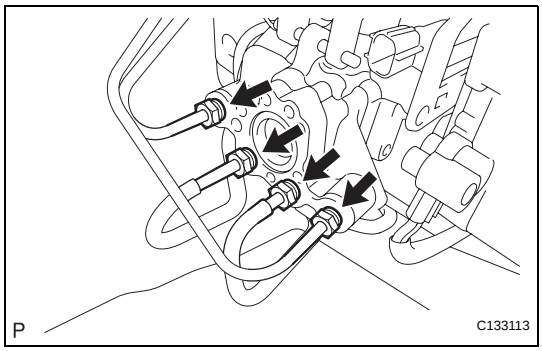

(b) Using SST, disconnect the 4 brake tubes from the hydraulic brake booster.
SST 09023-00101

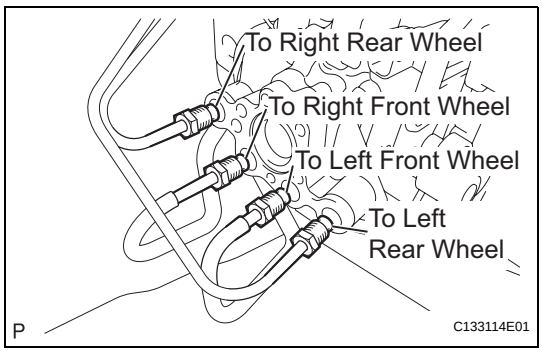

(c) Use tags or labels to identify the place to reconnect each line.

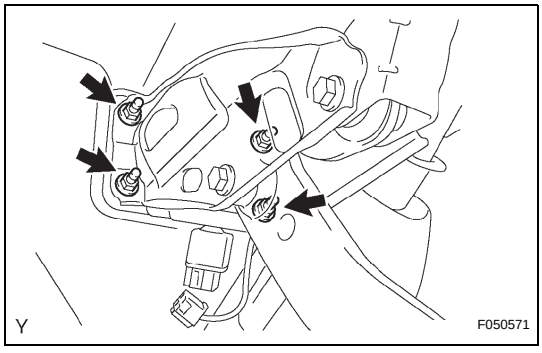

(d) Remove the 4 nuts and pull out the hydraulic brake booster.
(e) Remove the gasket from the hydraulic brake booster.

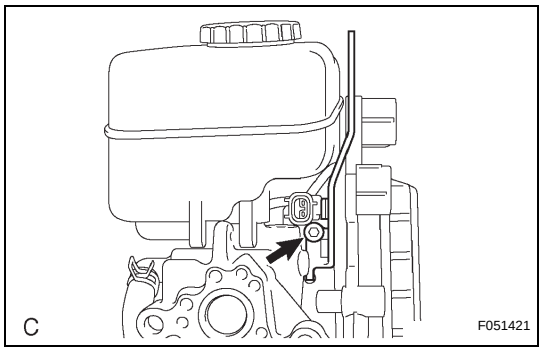

DISASSEMBLY

1. REMOVE BRAKE ACTUATOR NO. 1 BRACKET

(a) Using a 5 mm hexagon wrench, remove the bolt and brake actuator bracket.

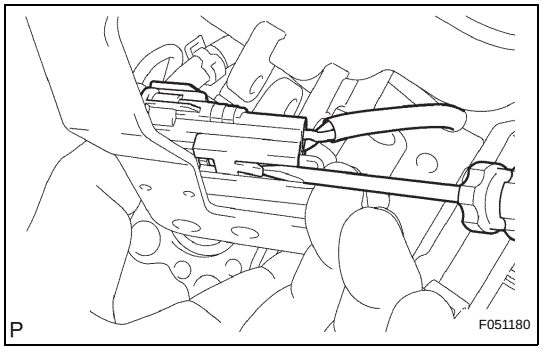

(b) Using a screwdriver, remove the fluid level warning switch connector.

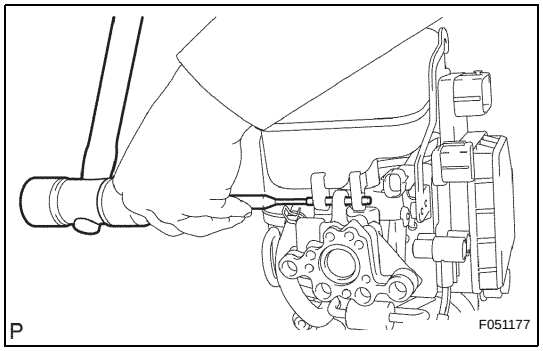

2. REMOVE BRAKE MASTER CYLINDER RESERVOIR SUB-ASSEMBLY

(a) Using a pin punch and hammer, remove the pin from the master cylinder reservoir.

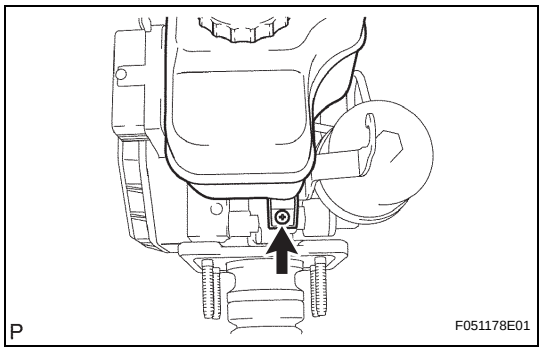

(b) Remove the screw and pull out the master cylinder reservoir.

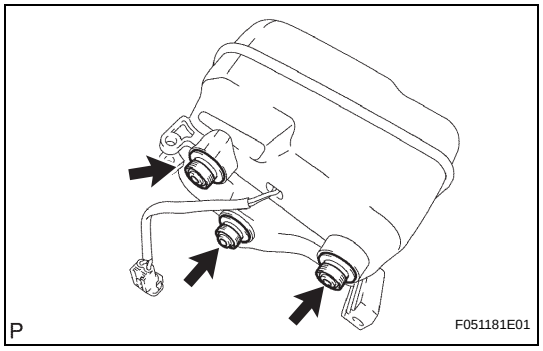

(c) Remove the 3 grommets from the master cylinder reservoir.

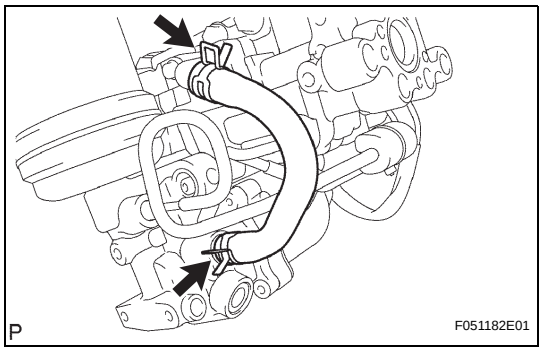

3. REMOVE BRAKE ACTUATOR HOSE

(a) Using needle-nose pliers, slide the 2 clips and remove the brake actuator hose.

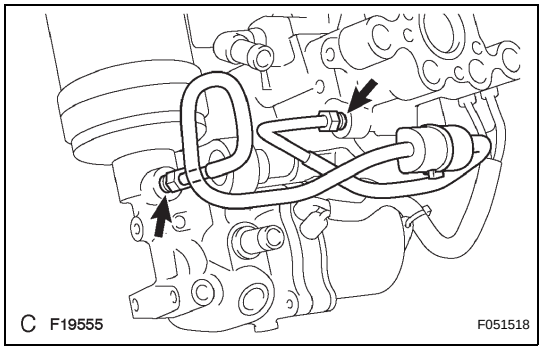

4. REMOVE BRAKE ACTUATOR NO. 1 TUBE

(a) Using SST, remove the brake actuator tube.
SST 09023-00101

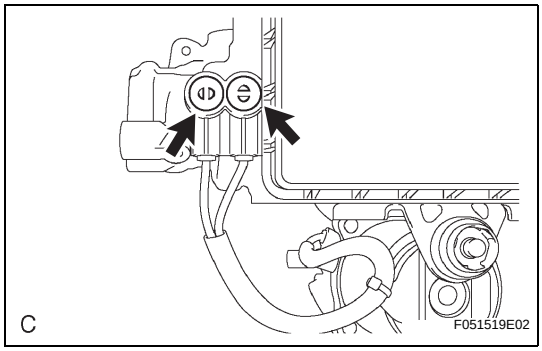

5. REMOVE BRAKE BOOSTER WITH ACCUMULATOR PUMP ASSEMBLY

(a) Using a screwdriver, remove the 2 plugs.

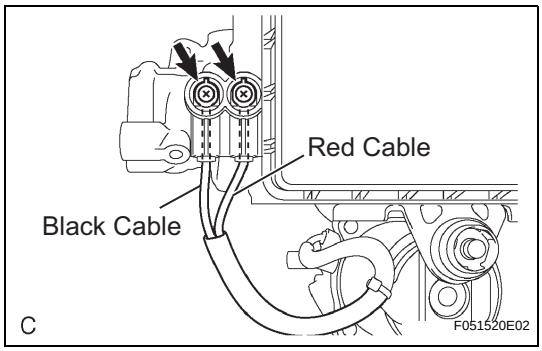

(b) Remove the 2 screws and pull the wire harness.

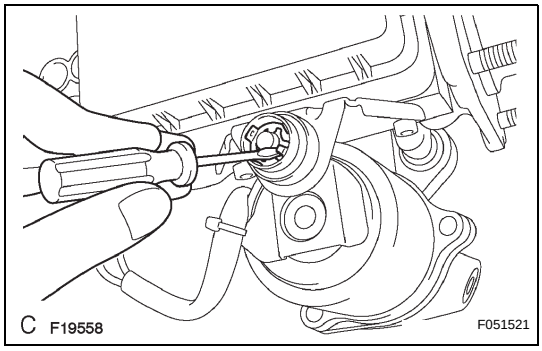

(c) Using a screwdriver, remove the clip.

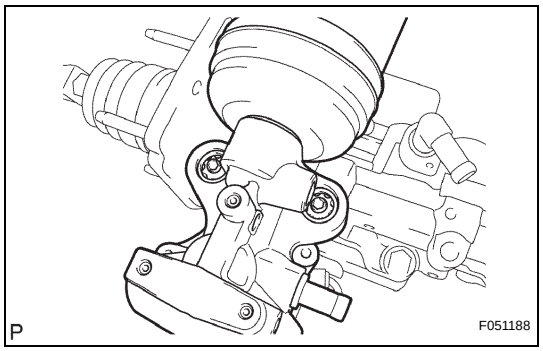

(d) Remove the brake booster with accumulator pump assembly.
(e) Remove the 2 bushes and 2 collars from the brake booster with accumulator pump assembly.

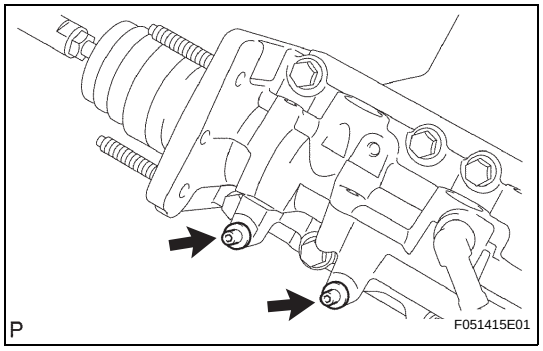

(f) Using a 4 mm hexagon wrench, remove the 2 pins.

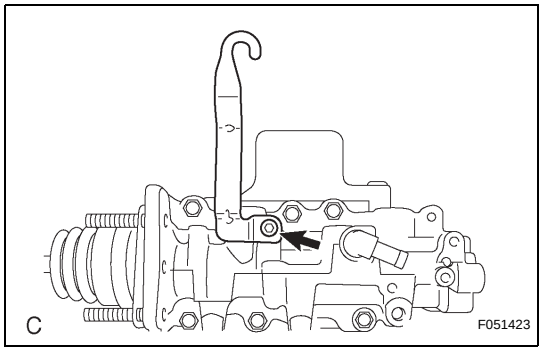

6. REMOVE BRAKE ACTUATOR BRACKET
(a) Using a 5 mm hexagon wrench, remove the bolt and brake actuator bracket.

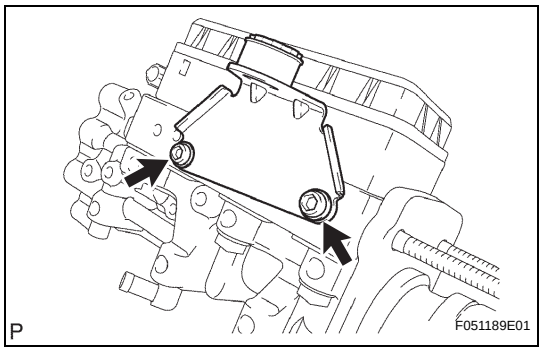

7. REMOVE BRAKE BOOSTER PUMP BRACKET
(a) Using a 5 mm hexagon wrench, remove the 2 bolts and the brake booster pump bracket.
(b) Remove the bush from the brake booster pump bracket.

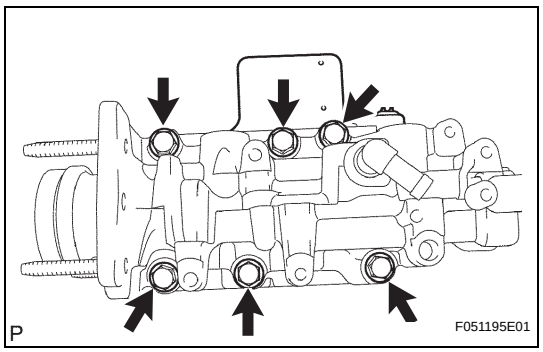

8. REMOVE MASTER CYLINDER SOLENOID
(a) Remove the 6 bolts and the master cylinder solenoid.

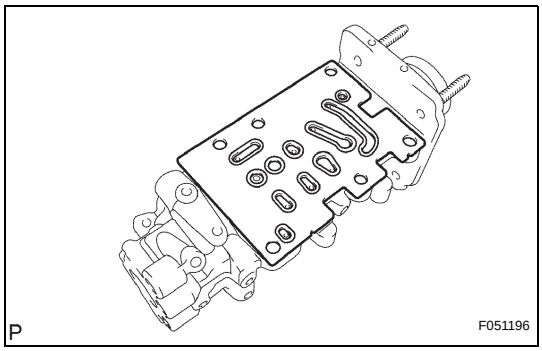

(b) Remove the gasket.

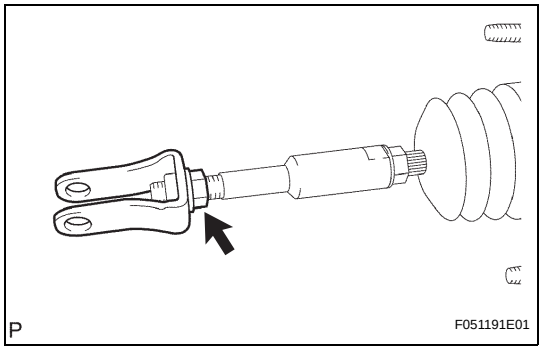

9. REMOVE MASTER CYLINDER PUSH ROD CLEVIS

(a) Loosen the lock nut on the rod operating adapter, and then remove the push rod clevis and lock nut.

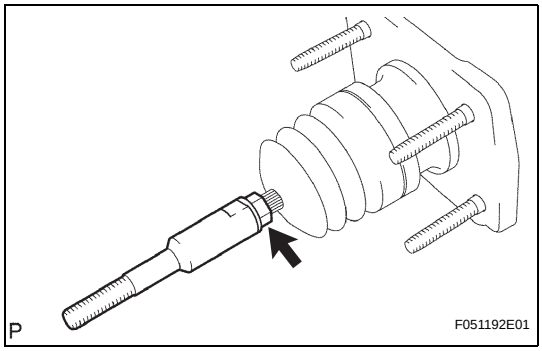

(b) Loosen the lock nut on the brake master cylinder side, and then remove the rod operating adapter and lock nut.

10. REMOVE MASTER CYLINDER BOOT

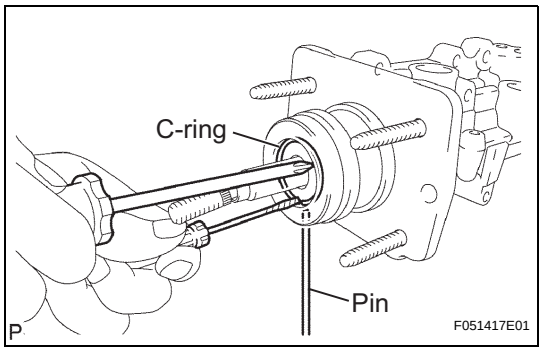

11. REMOVE PISTON

(a) When pressing in the piston with a screwdriver, use a pin or the equivalent to push the C-ring from the hole in the master cylinder body. Then remove the C-ring with another screwdriver.

(b) Remove the piston by pulling it straight out, not at an angle.

NOTICE:

If the piston is pulled out at an angle, there is a possibility that the cylinder bore could be damaged.

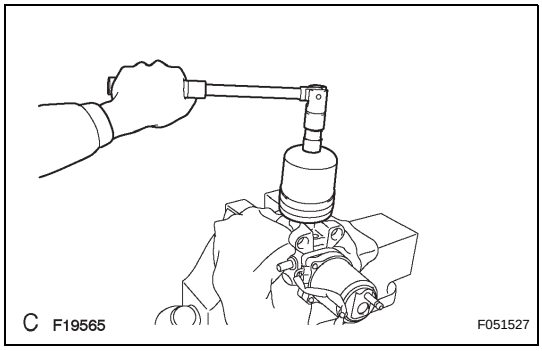

12. REMOVE BRAKE BOOSTER ACCUMULATOR ASSEMBLY

(a) Place the brake booster with accumulator pump assembly in a vise lined with a cloth.

(b) Remove the brake booster accumulator.

(c) Remove the brake booster accumulator pipe, compression spring and O-ring.

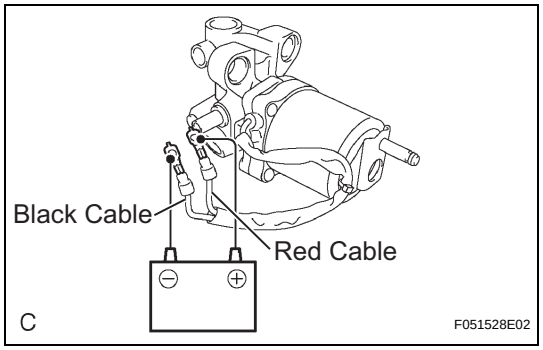

INSPECTION

1. INSPECT BRAKE BOOSTER PUMP ASSEMBLY

(a) Connect the positive (+) lead from the battery to the red cable of the pump, and the negative (-) lead to the black cable.

(b) Check the brake booster pump operation.
OK:
Operation sound is heard.

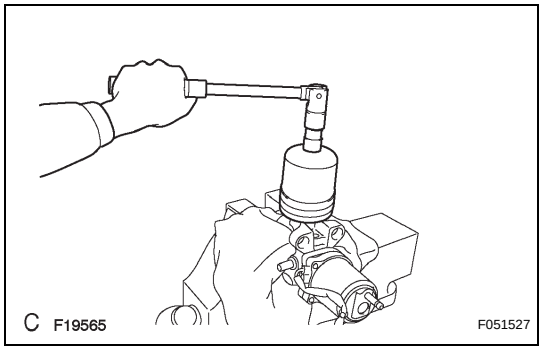

REASSEMBLY

1. INSTALL BRAKE BOOSTER ACCUMULATOR ASSEMBLY

(a) Place the brake booster pump in a vise lined with a cloth.

(b) Install the brake booster accumulator pipe, compression spring and a new O-ring.
NOTICE:
Ensure that no foreign matter enters the pump.

(c) Install the brake booster accumulator onto the brake booster pump.
Torque: 57 N*m (585 kgf*cm, 42 ft.*lbf)

2. INSTALL PISTON

(a) Apply lithium soap base glycol grease to a new piston.

(b) Install the piston into the master cylinder body.

(c) Using 2 screwdrivers, install a new C-ring while pressing the piston.
NOTICE:
Do not damage the rubber lips on the piston when reassembling.

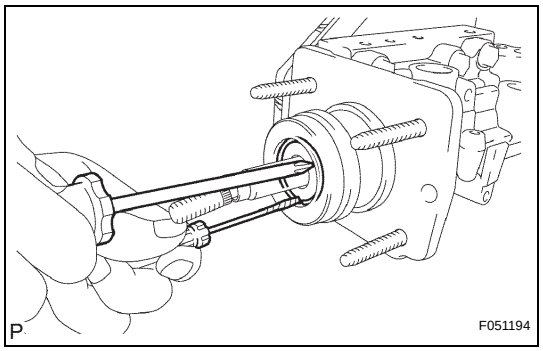

3. INSTALL MASTER CYLINDER BOOT

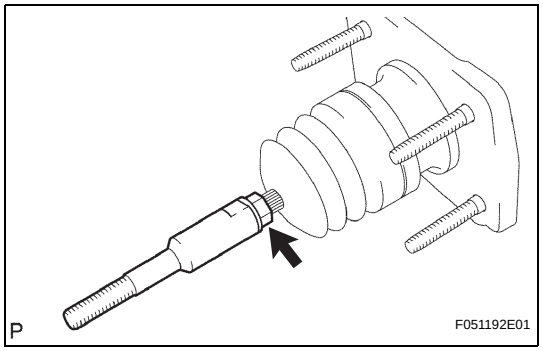

4. INSTALL MASTER CYLINDER PUSH ROD CLEVIS

(a) Install the master cylinder side lock nut and rod operating adapter.
Torque: 26 N*m (260 kgf*cm, 19 ft.*lbf)

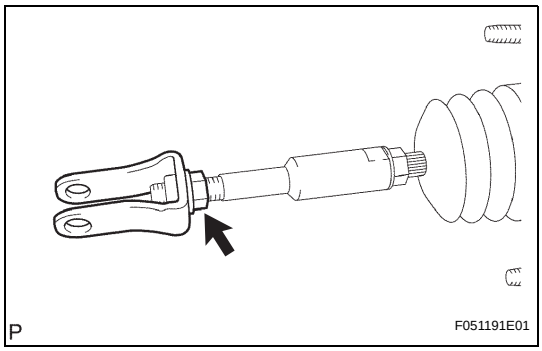

(b) Install the lock nut and push rod clevis.
Torque: 26 N*m (260 kgf*cm, 19 ft.*lbf)

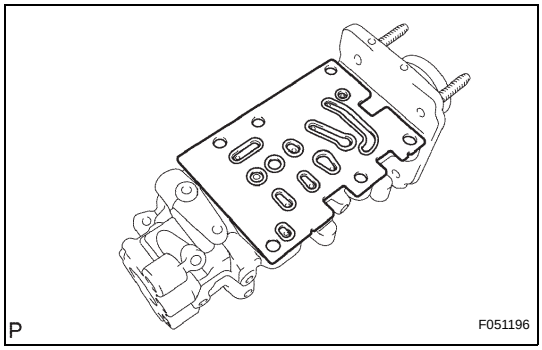

5. INSTALL MASTER CYLINDER SOLENOID

(a) Place a new gasket onto the master cylinder solenoid.

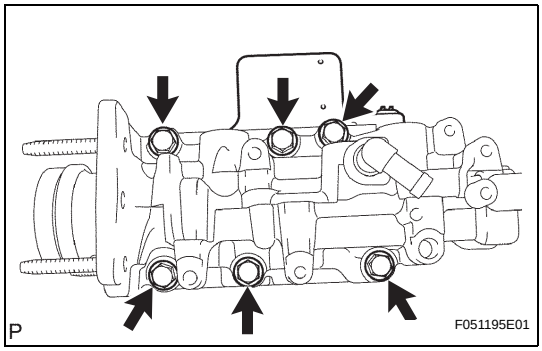

(b) Install the master cylinder solenoid with 6 new bolts.
Torque: 32 N*m (325 kgf*cm, 24 ft.*lbf)
NOTICE:
Do not let water, dust, or other foreign matter adhere to the surface or fitting surfaces of the master cylinder solenoid, master cylinder body and gasket.

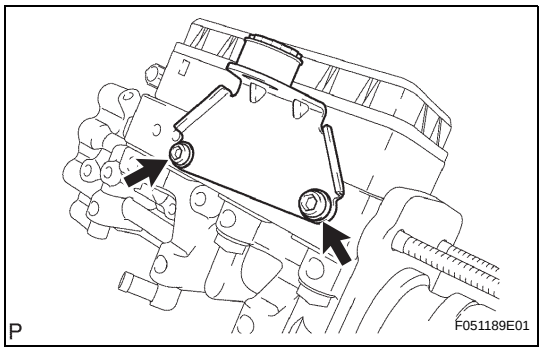

6. INSTALL BRAKE BOOSTER PUMP BRACKET

(a) Using a 5 mm hexagon wrench, install the brake booster pump bracket with the 2 bolts.
Torque: 7.8 N*m (80 kgf*cm, 69 in.*lbf)

(b) Install the bush onto the brake booster pump bracket.

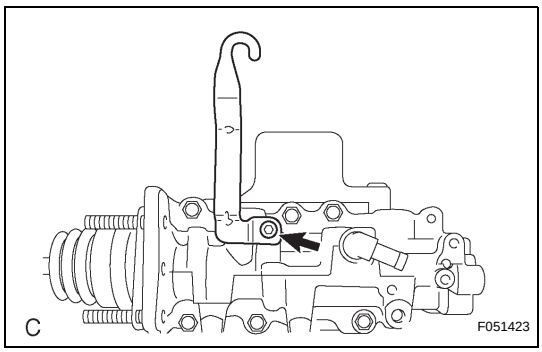

7. INSTALL BRAKE ACTUATOR BRACKET

(a) Using a 5 mm hexagon wrench, install the brake actuator bracket with the bolt.
Torque: 7.8 N*m (80 kgf*cm, 69 in.*lbf)

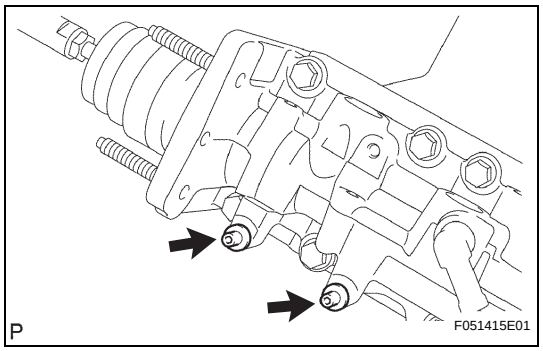

8. INSTALL BRAKE BOOSTER WITH ACCUMULATOR PUMP ASSEMBLY

(a) Using a 4 mm hexagon wrench, install the 2 pins.
Torque: 7.8 N*m (80 kgf*cm, 69 in.*lbf)

(b) Install the 2 collars and 2 bushes onto the brake booster with accumulator pump assembly.

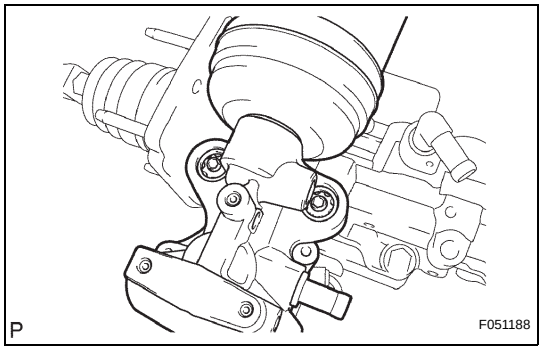

(c) Install the brake booster with accumulator pump assembly.

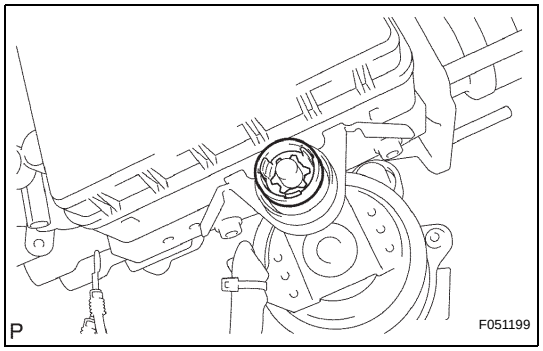

(d) Install a new clip.

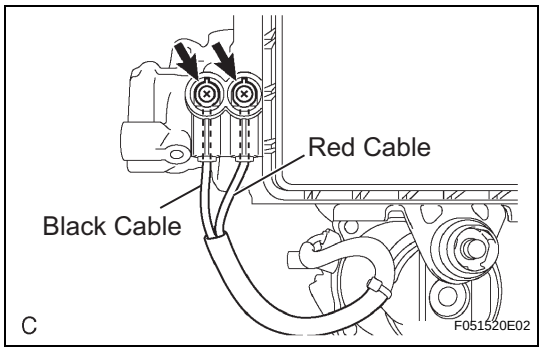

(e) Install the wire harnesses with the 2 screws.
Torque: 2.9 N*m (30 kgf*cm, 26 in.*lbf)

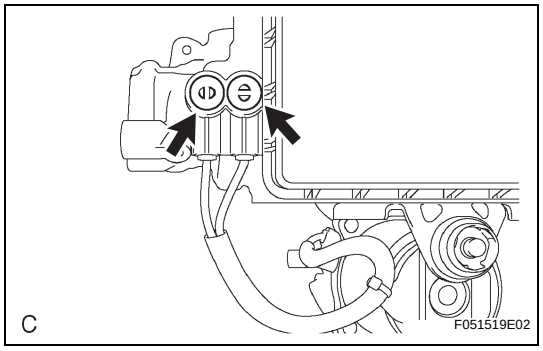

(f) Install 2 new plugs.

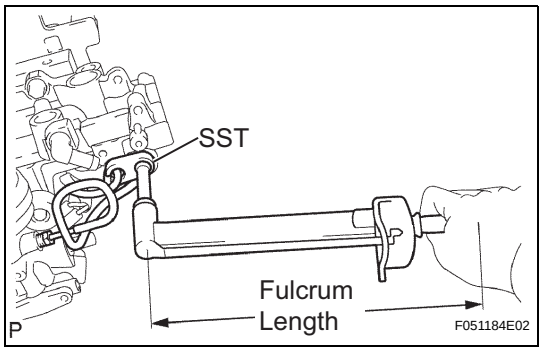

9. INSTALL BRAKE ACTUATOR NO. 1 TUBE

(a) Using SST, install the brake actuator tube.
SST 09023-00101
Torque: for use without SST
15 N*m (155 kgf*cm, 11 ft.*lbf)
for use with SST
14 N*m (143 kgf*cm, 10 ft.*lbf)
HINT:
- Use a torque wrench with a fulcrum length of 300 mm (11.81 in.).
- This torque value is effective when SST is parallel to the torque wrench.

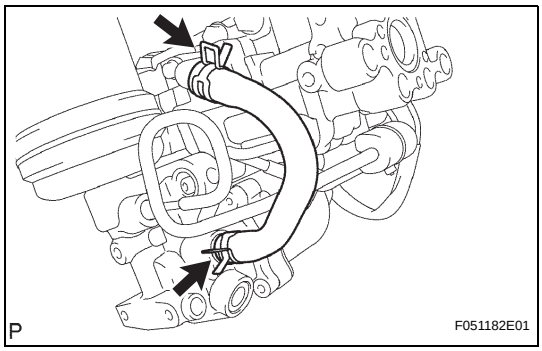

10. INSTALL BRAKE ACTUATOR HOSE

(a) Using needle-nose pliers, install the brake actuator hose with the 2 clips.

11. INSTALL BRAKE MASTER CYLINDER RESERVOIR SUB-ASSEMBLY

(a) Apply lithium soap base glycol grease to 3 new grommets.

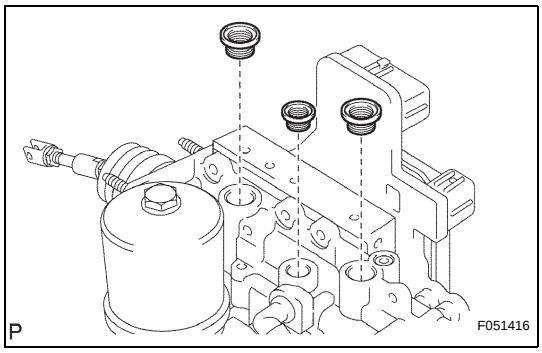

(b) Install the 3 grommets onto the master cylinder body.
NOTICE:
The grommets are different sizes. Install the grommets in their correct positions.

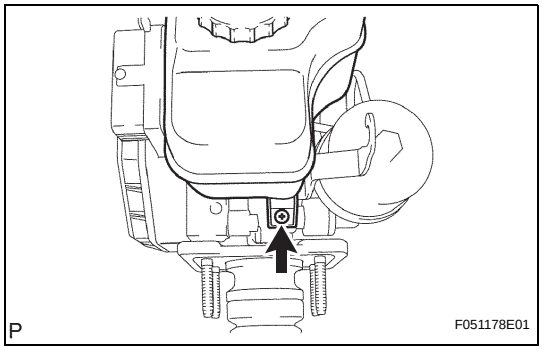

(c) Install the master cylinder reservoir with the screw.
Torque: 1.7 N*m (17 kgf*cm, 15 in.*lbf)

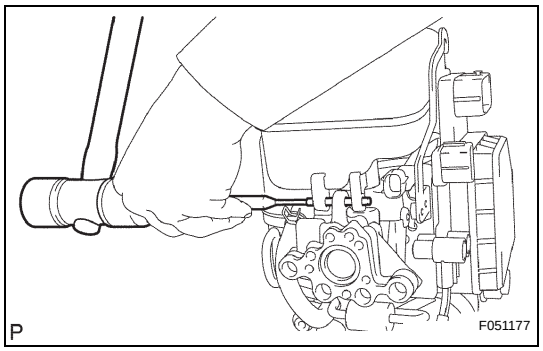

(d) Using a pin punch and hammer, install a new pin onto the master cylinder reservoir.

12. INSTALL BRAKE ACTUATOR NO. 1 BRACKET

(a) Install the fluid level warning switch connector.

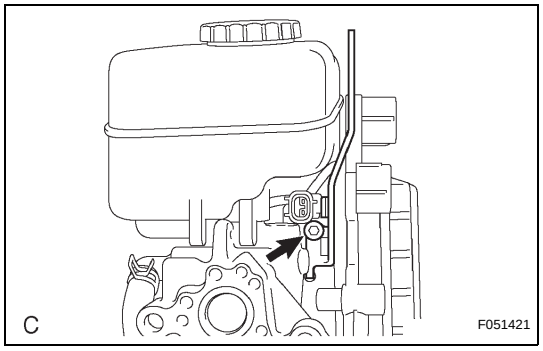

(b) Using a 5 mm hexagon wrench, install the brake actuator bracket with the bolt.
Torque: 7.8 N*m (80 kgf*cm, 69 in.*lbf)

INSTALLATION

1. INSTALL HYDRAULIC BRAKE BOOSTER

(a) Install a new gasket onto the hydraulic brake booster.

(b) Install the hydraulic brake booster with the 4 nuts.
Torque: 14 N*m (145 kgf*cm, 10 ft.*lbf)

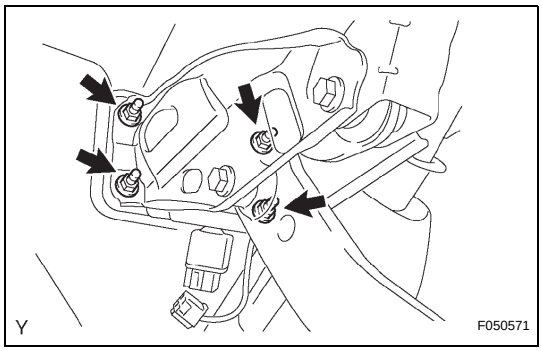

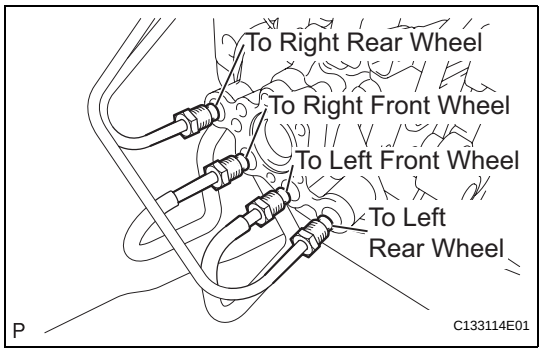

(c) Using SST, connect the 4 brake tubes to the correct positions on the hydraulic brake booster, as shown in the illustration.
SST 09023-00101
Torque: for use without SST
15 N*m (155 kgf*cm, 11 ft.*lbf)
for use with SST
14 N*m (143 kgf*cm, 10 ft.*lbf)
HINT:
- Use a torque wrench with a fulcrum length of 300 mm (11.81 in.).
- This torque value is effective when SST is parallel to the torque wrench.

(d) Connect the 3 connectors.

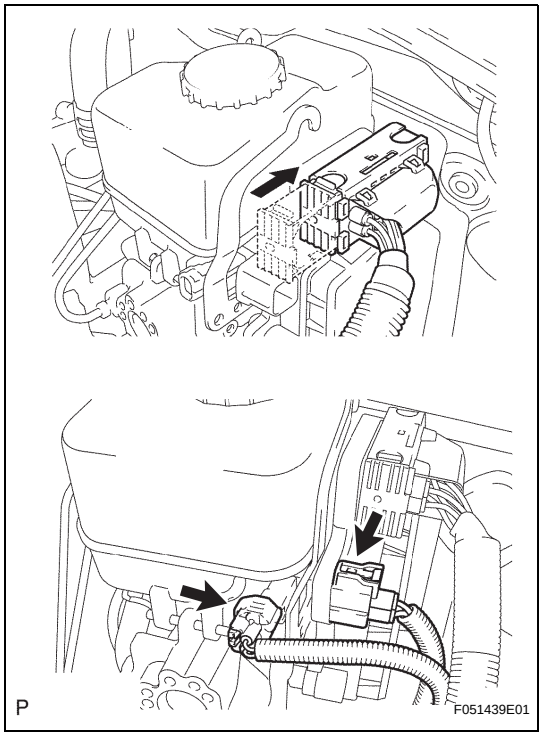

2. INSTALL MASTER CYLINDER PUSH ROD CLEVIS (See page BR-14)

3. CONNECT CABLE TO NEGATIVE BATTERY TERMINAL
Torque: 3.9 N*m (40 kgf*cm, 35 in.*lbf)

4. FILL RESERVOIR WITH BRAKE FLUID (See page BR-5)

5. BLEED BRAKE BOOSTER WITH ACCUMULATOR PUMP ASSEMBLY (See page BR-5)

6. BLEED BRAKE LINE (See page BR-5)

7. BLEED MASTER CYLINDER SOLENOID (See page BR-6)

8. CHECK FLUID LEVEL IN RESERVOIR (See page BR-7)

9. CHECK FOR BRAKE FLUID LEAKAGE

10. INSPECT AND ADJUST BRAKE PEDAL (See page BR-10)

11. INSTALL INSTRUMENT PANEL LOWER FINISH PANEL SUB-ASSEMBLY (See page IP-29)

12. **CONNECT HOOD LOCK CONTROL LEVER SUB-ASSEMBLY (See page IP-30)**
13. **INSTALL INSTRUMENT PANEL NO. 1 REGISTER ASSEMBLY (See page IP-30)**
14. **INSTALL FRONT DOOR OPENING TRIM WEATHERSTRIP (See page IP-33)**
15. **INSTALL COWL SIDE TRIM BOARD (See page IR-45)**
16. **INSTALL FOOTREST CLIP (See page IR-2)**
17. **INSTALL FRONT FLOOR FOOTREST (See page IR-2)**
18. **INSTALL FRONT DOOR SCUFF PLATE (See page IR-45)**
19. **INSTALL BRAKE MASTER CYLINDER OPERATION (See page BR-20)**

DISPOSAL

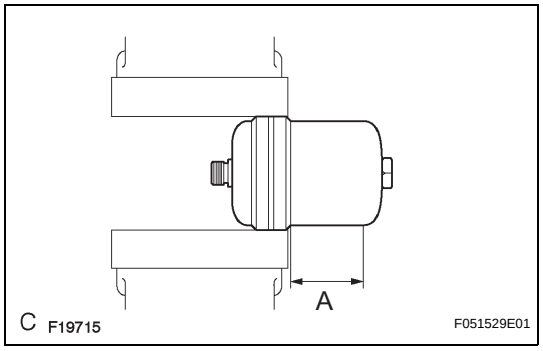

1. **DISPOSE OF BRAKE BOOSTER ACCUMULATOR ASSEMBLY**
   (a) Place the brake booster accumulator in a vise and cover it with a cloth.
   (b) Slowly cut a hole in area A on the brake booster accumulator as shown in the illustration. And discharge the gas and liquid inside.
   NOTICE:
   - **As gas may spray out, cover the brake booster accumulator with a cloth when performing the operation.**
   - **Work slowly and do not cut the hole too quickly or suddenly.**
   - **Wear protective glasses during the operation.**

   (c) When the outer body of the brake booster accumulator is cut, gas and liquid discharge.
   HINT:
   - The gas is colorless, odorless and nonpoisonous nitrogen gas.
   - The liquid is brake fluid.

FRONT BRAKE

COMPONENTS

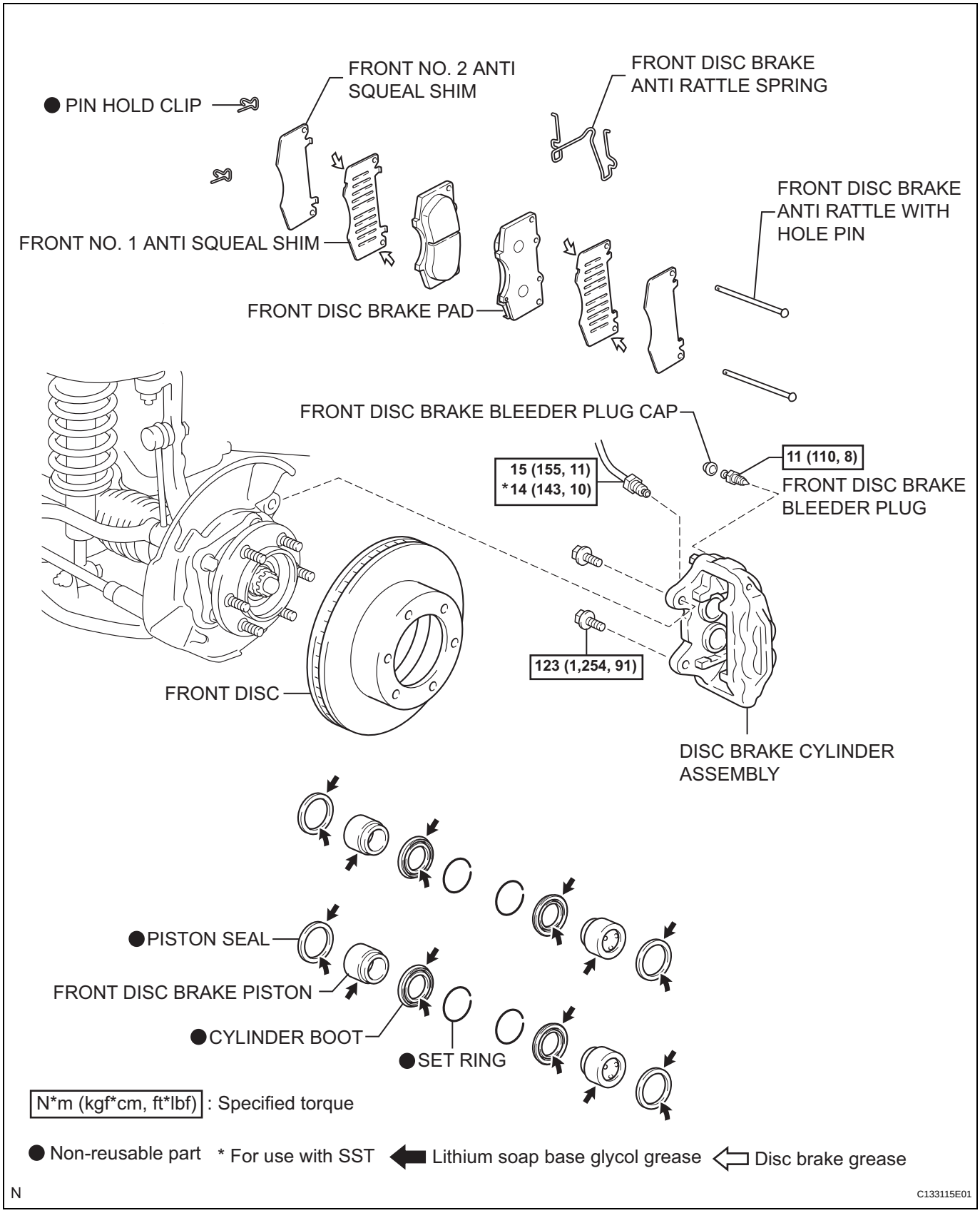

BR

REMOVAL

1. **REMOVE FRONT WHEEL**
2. **DRAIN BRAKE FLUID**
   NOTICE:
   Immediately wash off any brake fluid that comes into contact with any painted surfaces.

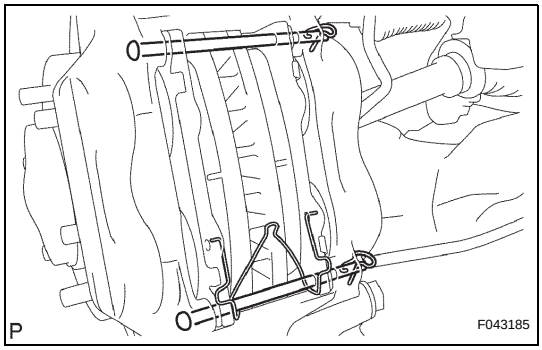

3. **REMOVE FRONT DISC BRAKE ANTI RATTLE WITH HOLE PIN**
   (a) Remove the 2 pin hold clips, then remove the 2 hole pins from the disc brake cylinder.
   (b) Remove the anti rattle spring from the disc brake pad.
4. **REMOVE FRONT DISC BRAKE PAD**
   (a) Remove the 2 disc brake pads with anti squeal shims from the disc brake cylinder.
5. **REMOVE FRONT ANTI SQUEAL SHIM KIT**
   (a) Remove the No. 1 and No. 2 anti squeal shims from each of the disc brake pads.

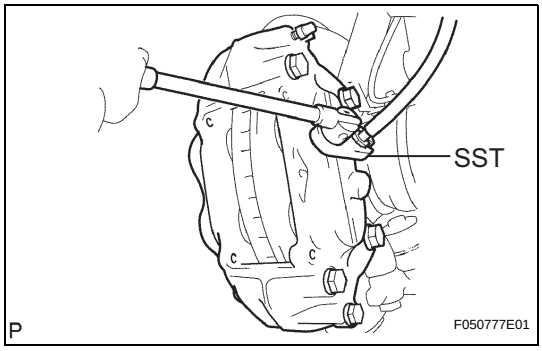

6. **REMOVE DISC BRAKE CYLINDER ASSEMBLY**
   (a) Using SST, separate the brake tube from the disc brake cylinder.
   SST 09023-00101
   HINT:
   Use a container to collect the brake fluid as it drains out.
   (b) Remove the 2 bolts and disc brake cylinder.

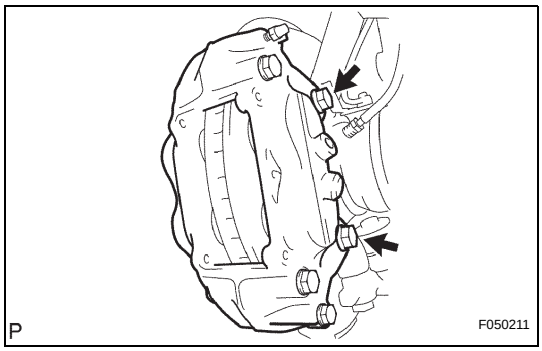

7. **REMOVE FRONT DISC**
   (a) Place matchmarks on the disc and the axle hub and remove the disc.

DISASSEMBLY

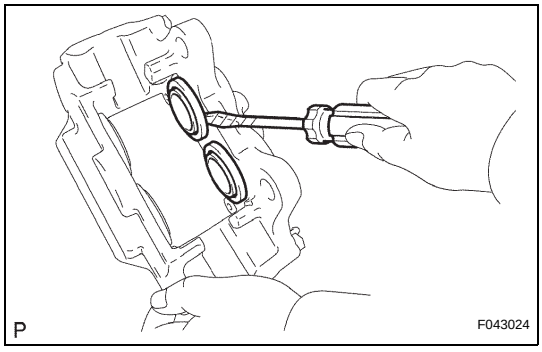

1. **REMOVE CYLINDER BOOT**
   (a) Using a screwdriver, remove the 4 set rings and 4 cylinder boots from the disc brake cylinder.

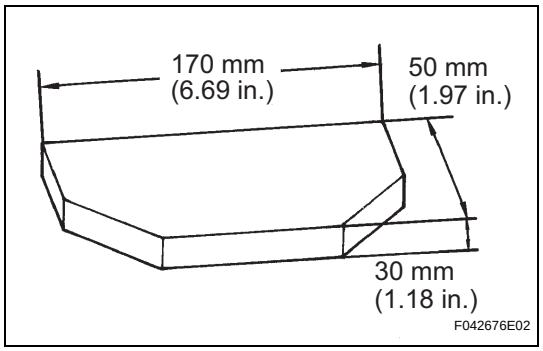

2. REMOVE FRONT DISC BRAKE PISTON

(a) Prepare a wooden plate to hold the pistons.

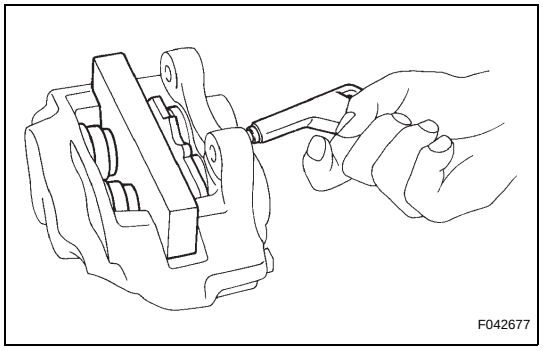

(b) Place the plate between the pistons and insert a pad into one side.

(c) Apply compressed air to remove the pistons one side at a time from the disc brake cylinder.

CAUTION:
Do not place your fingers in front of the piston when applying compressed air.
NOTICE:
Do not spatter the brake fluid.

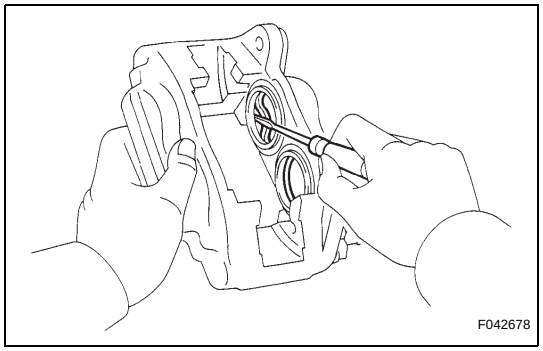

3. REMOVE PISTON SEAL

(a) Using a screwdriver, remove the 4 piston seals from the cylinder.

NOTICE:
Do not damage the inner surface or piston seal groove of the cylinder.

4. REMOVE FRONT DISC BRAKE BLEEDER PLUG CAP

5. REMOVE FRONT DISC BRAKE BLEEDER PLUG

BR

INSPECTION

1. INSPECT BRAKE CYLINDER AND PISTON

(a) Check the cylinder bore and piston for rust and scoring.
If necessary, replace the disc brake cylinder and piston.

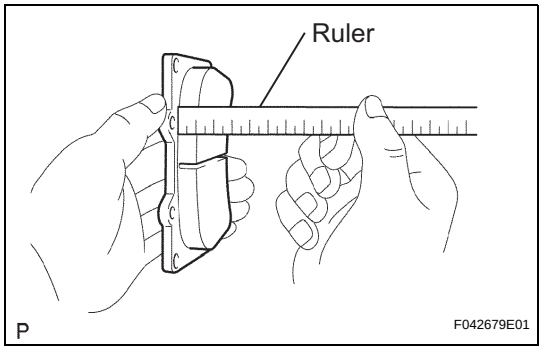

2. INSPECT PAD LINING THICKNESS

(a) Using a ruler, measure the pad lining thickness.
Standard thickness:
11.5 mm (0.453 in.)
Minimum thickness:
1.0 mm (0.039 in.)
If the pad lining thickness is equal to or less than the minimum thickness, replace the disc brake pad kit.

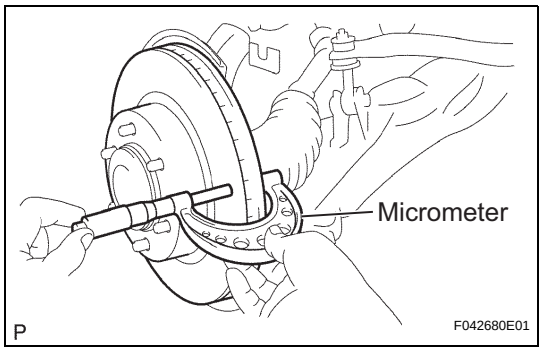

3. INSPECT DISC THICKNESS

(a) Using a micrometer, measure the disc thickness.
Standard thickness:
28.0 mm (1.102 in.)
Minimum thickness:
26.0 mm (1.024 in.)
If the disc thickness is less than the minimum, replace the front disc.

4. INSPECT DISC RUNOUT

(a) Check the bearing play in the axial direction and check for the axle hub runout (See page AH-1).

(b) Provisionally fasten the front disc together with the hub nuts.
Torque: 112 N*m (1,137 kgf*cm, 82 ft.*lbf)

(c) Using a dial indicator, measure the disc runout 10 mm (0.39 in.) away from the outer edge of the front disc.
Maximum disc runout:
0.05 mm (0.0020 in.)
If the runout exceeds the maximum value, change the installation positions of the disc and axle to make the minimum runout. If the runout exceeds the maximum even when the installation positions are changed, grind the disc. If the disc thickness is less than the minimum, replace the front disc.

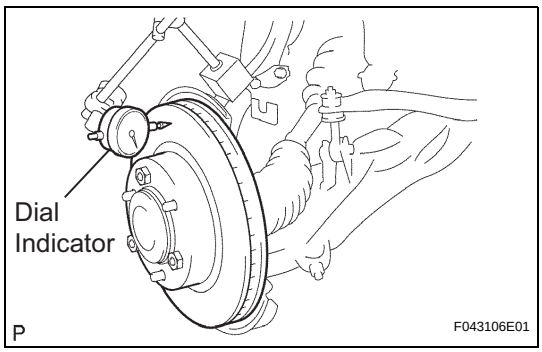

REASSEMBLY

1. TEMPORARILY TIGHTEN FRONT DISC BRAKE BLEEDER PLUG

2. INSTALL FRONT DISC BRAKE BLEEDER PLUG CAP

3. INSTALL PISTON SEAL

(a) Apply lithium soap base glycol grease to 4 new piston seals.

(b) Install the 4 piston seals onto the disc brake cylinder.

NOTICE:

Securely install the piston seal into the groove of the disc brake cylinder.

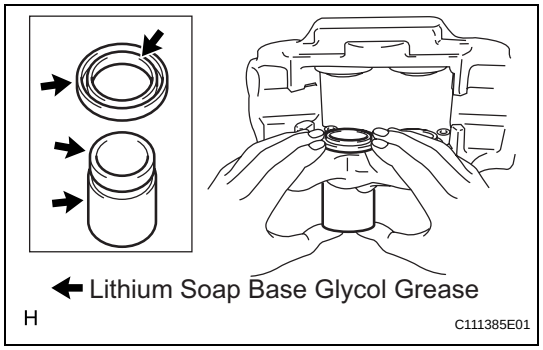

4. INSTALL FRONT DISC BRAKE PISTON

(a) Apply lithium soap base glycol grease to the 4 disc brake pistons and 4 new cylinder boots.

(b) Install the 4 cylinder boots to the 4 disc brake pistons.

(c) Install the 4 disc brake pistons onto the disc brake cylinder.

NOTICE:

Do not forcibly install the piston into the disc brake cylinder.

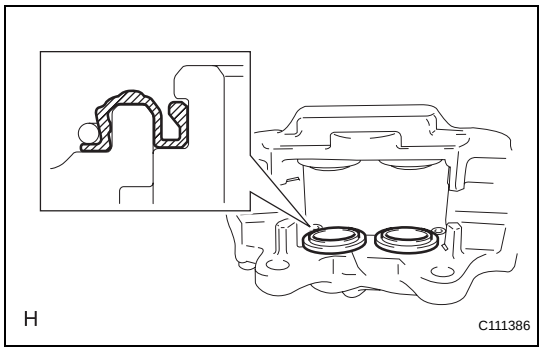

5. INSTALL CYLINDER BOOT

(a) Install the 4 cylinder boots onto the disc brake cylinder.

NOTICE:

Securely install the cylinder boot into the grooves of the disc brake cylinder and piston.

(b) Using a screwdriver, install 4 new set rings.

NOTICE:

Do not damage the boot.

INSTALLATION

1. INSTALL FRONT DISC

(a) Align the matchmarks of the disc and axle hub and install the disc.
HINT:
When replacing the disc, select the position that gives the minimum disc runout.

BR

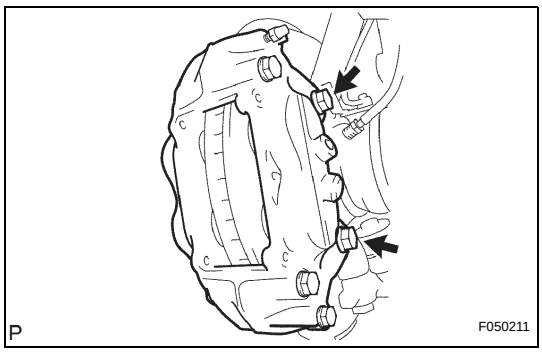

2. INSTALL DISC BRAKE CYLINDER ASSEMBLY

(a) Install the disc brake cylinder with the 2 bolts.
Torque: 123 N*m (1,254 kgf*cm, 91 ft.*lbf)

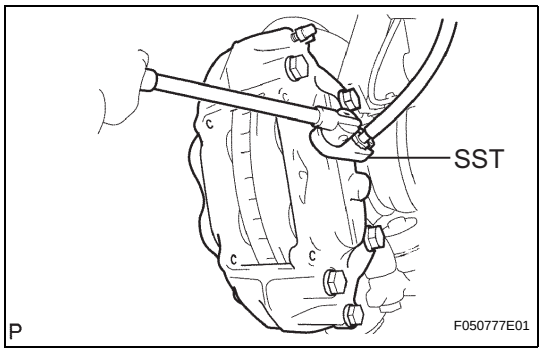

(b) Using SST, install the brake tube onto the disc brake cylinder.
SST 09023-00101
Torque: for use without SST
15 N*m (155 kgf*cm, 11 ft.*lbf)
for use with SST
14 N*m (143 kgf*cm, 10 ft.*lbf)
HINT:
- Use a torque wrench with a fulcrum length of 300 mm (11.81 in.).
- This torque value is effective when SST is parallel to the torque wrench.

3. INSTALL FRONT ANTI SQUEAL SHIM KIT
NOTICE:
If necessary, replace the anti squeal shim when replacing the brake pad.

(a) Apply disc brake grease to both sides of each No. 1 shim.
(b) Install the No. 1 and No. 2 anti squeal shims onto each brake pad.

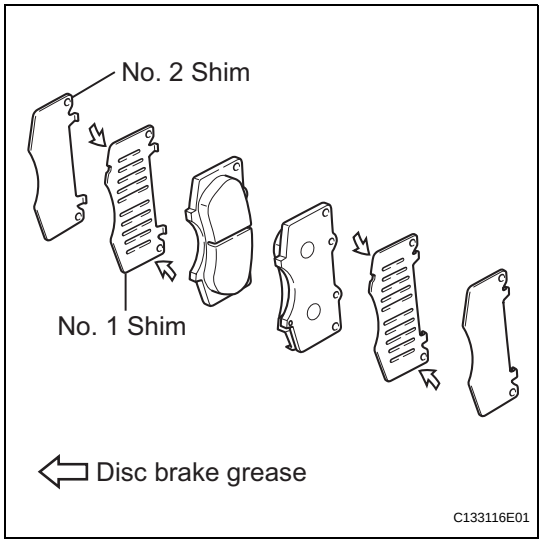

4. INSTALL FRONT DISC BRAKE PAD

(a) Install the 2 disc brake pads with anti squeal shims onto the disc brake cylinder.
NOTICE:
There should be no oil or grease on the friction surfaces of the disc brake pads or the front disc.

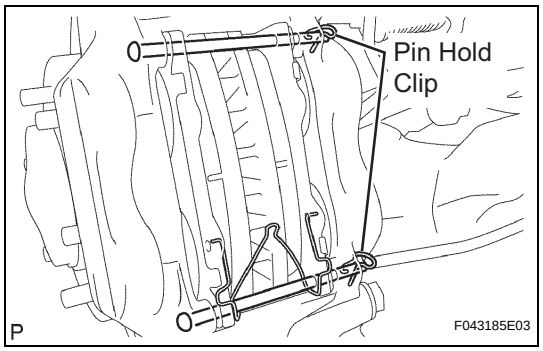

5. **INSTALL FRONT DISC BRAKE ANTI RATTLE WITH HOLE PIN**
   (a) Install the anti rattle spring and 2 hole pins onto the disc brake cylinder.
   HINT:
   The anti rattle spring is installed onto the lower hole pin.
   (b) Install the 2 new pin hold clips onto the hole pin.
   NOTICE:
   Install the pin hold clip with its handle oriented in the center of the vehicle.
6. **FILL RESERVOIR WITH BRAKE FLUID (See page BR-5)**
7. **BLEED BRAKE LINE (See page BR-5)**
8. **CHECK FLUID LEVEL IN RESERVOIR (See page BR-7)**
9. **CHECK FOR BRAKE FLUID LEAKAGE**
10. **INSTALL FRONT WHEEL**
    Torque: 112 N*m (1,137 kgf*cm, 82 ft.*lbf)

FRONT BRAKE FLEXIBLE HOSE

COMPONENTS

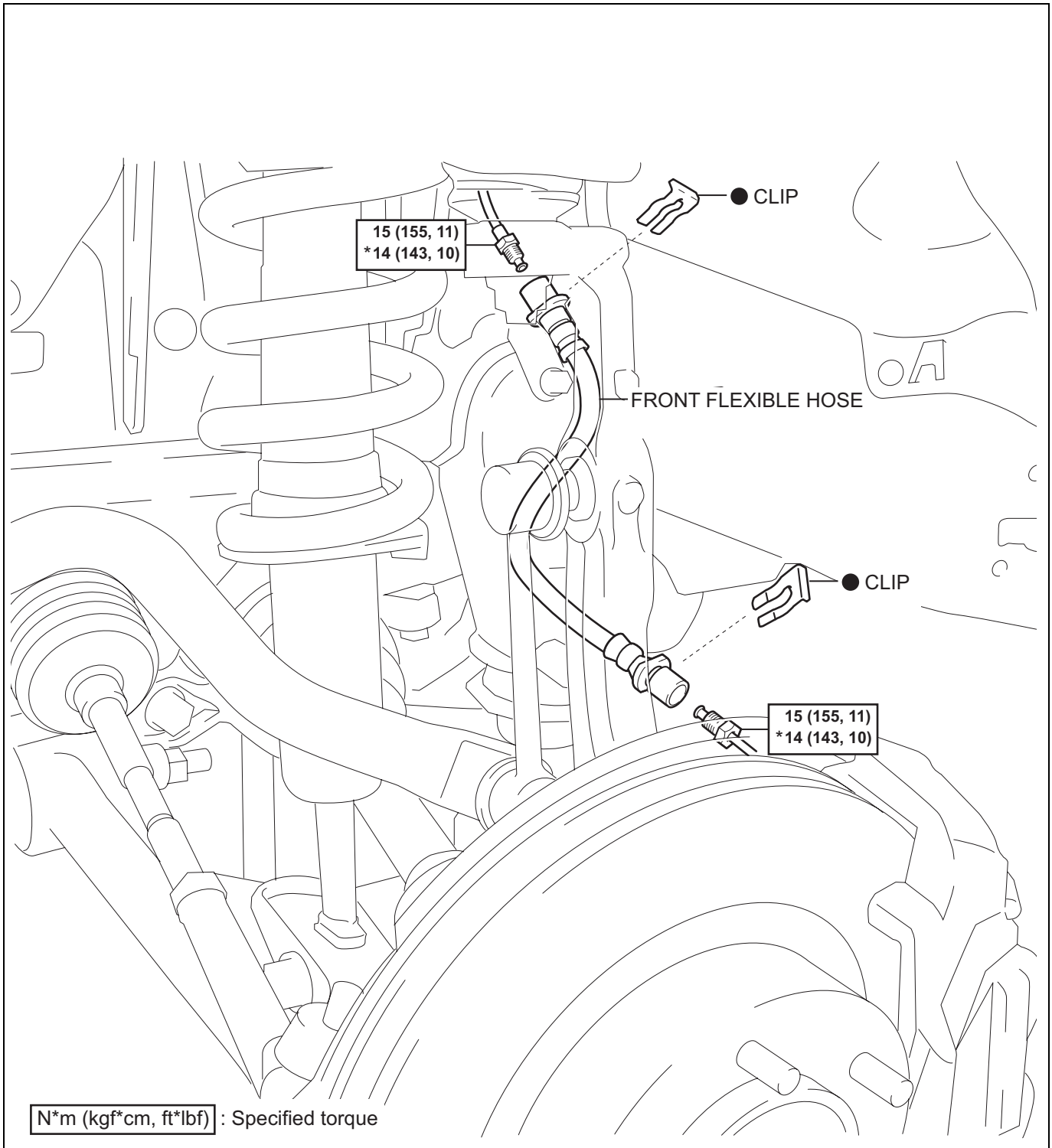

N*m (kgf*cm, ft*lbf) : Specified torque

● Non-reusable part

* For use with SST

P

C133086E01

BR

REMOVAL

1. **REMOVE FRONT WHEEL**
2. **DRAIN BRAKE FLUID**
   NOTICE:
   Immediately wash off any brake fluid that comes into contact with any painted surfaces.
3. **REMOVE FRONT FLEXIBLE HOSE**
   (a) Using SST, separate the brake tubes.
   SST 09023-00101
   HINT:
   Use a container to collect the brake fluid as it drains out.
   (b) Remove the 2 clips and flexible hose.

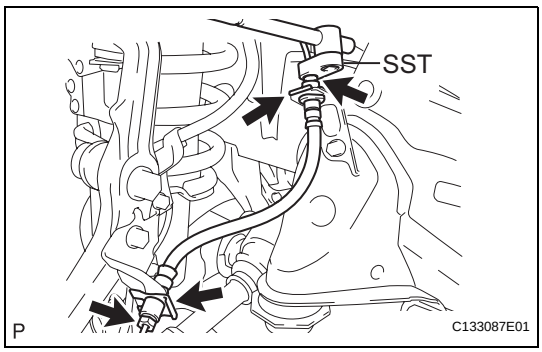

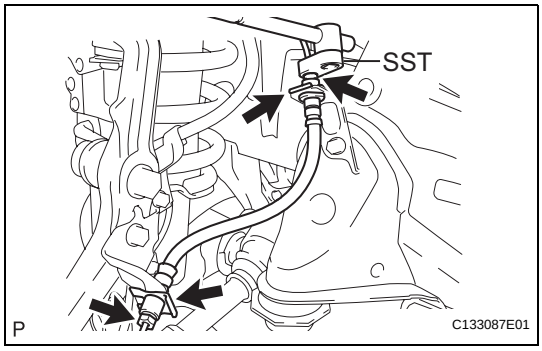

INSTALLATION

1. **INSTALL FRONT FLEXIBLE HOSE**
   (a) Install the flexible hose with 2 new clips.
   (b) Using SST, install the 2 brake tubes onto the flexible hose.
   SST 09023-00101
   Torque: for use without SST
   15 N*m (155 kgf*cm, 11 ft.*lbf)
   for use with SST
   14 N*m (143 kgf*cm, 10 ft.*lbf)
   HINT:
   - Use a torque wrench with a fulcrum length of 300 mm (11.81 in.).
   - This torque value is effective when SST is parallel to the torque wrench.
2. **FILL RESERVOIR WITH BRAKE FLUID (See page BR-5)**
3. **BLEED BRAKE LINE (See page BR-5)**
4. **CHECK FLUID LEVEL IN RESERVOIR (See page BR-7)**
5. **CHECK FOR BRAKE FLUID LEAKAGE**
6. **INSTALL FRONT WHEEL**
   Torque: 112 N*m (1,137 kgf*cm, 82 ft.*lbf)

REAR BRAKE

COMPONENTS

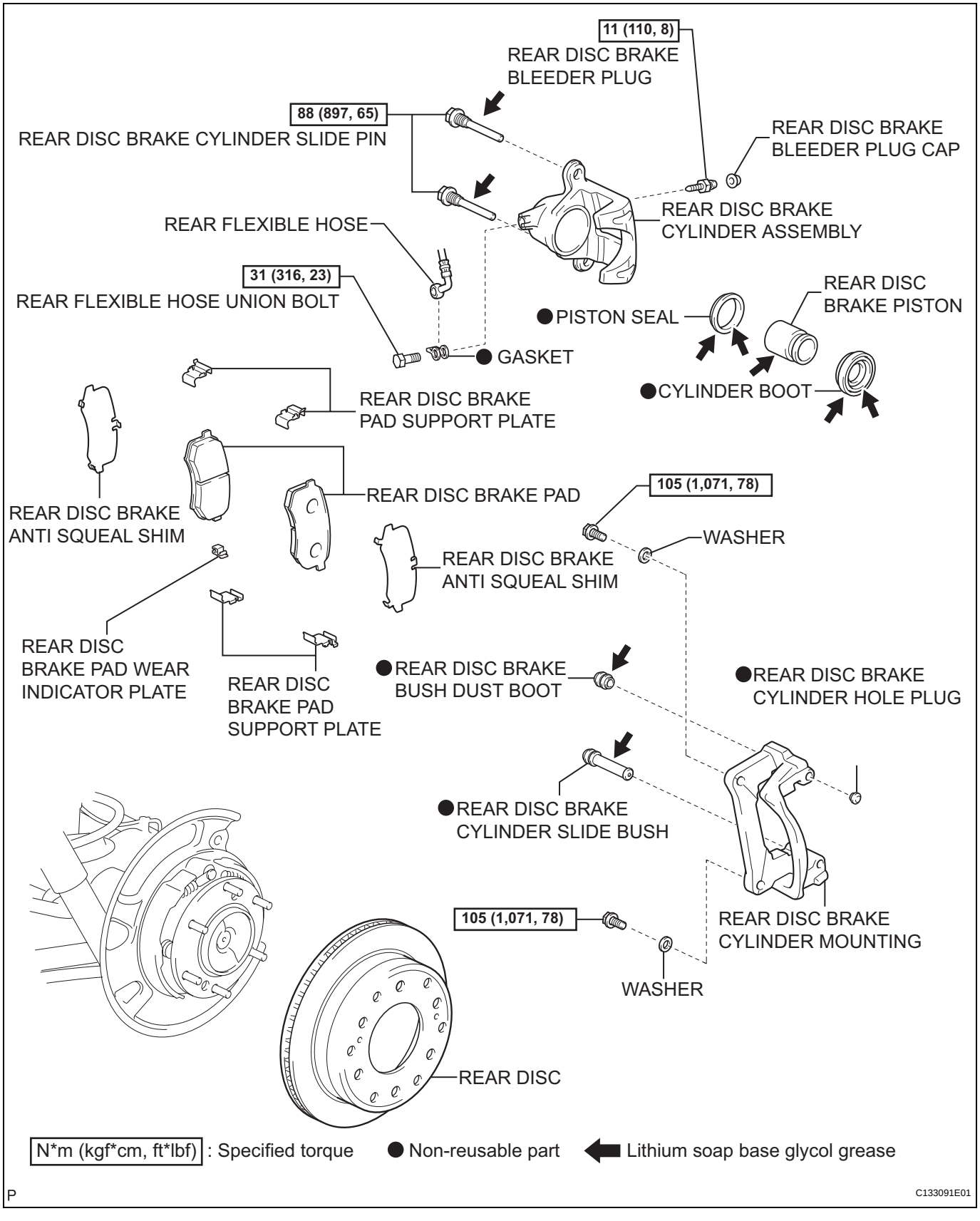

BR

REMOVAL

1. **REMOVE REAR WHEEL**

2. **DRAIN BRAKE FLUID**
   NOTICE:
   Immediately wash off any brake fluid that comes into contact with any painted surfaces.

3. **SEPARATE REAR FLEXIBLE HOSE**
   (a) Remove the union bolt and gasket and separate the flexible hose from the disc brake cylinder.
   HINT:
   Use a container to collect the brake fluid as it drains out.

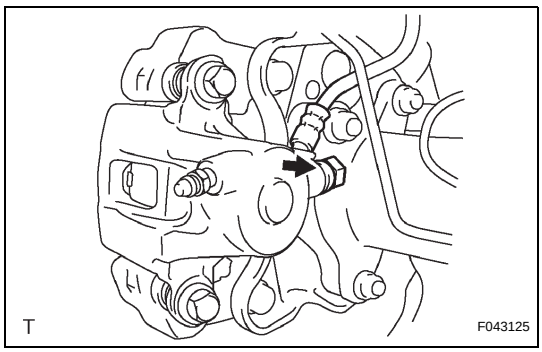

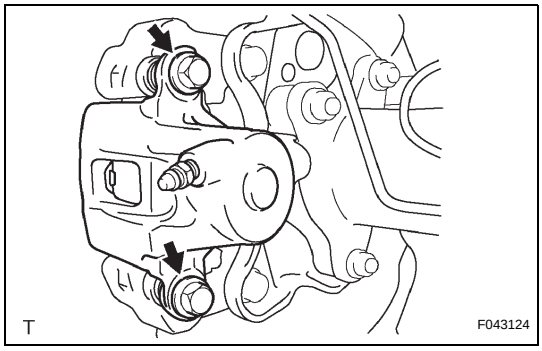

4. **REMOVE REAR DISC BRAKE CYLINDER ASSEMBLY**
   (a) Remove the 2 slide pins and remove the disc brake cylinder from the disc brake cylinder mounting.

5. **REMOVE REAR DISC BRAKE PAD**
   (a) Remove the 2 disc brake pads with anti squeal shim from the disc brake cylinder mounting.

6. **REMOVE REAR DISC BRAKE ANTI SQUEAL SHIM**
   (a) Remove the 2 anti squeal shims from each brake pad.

7. **REMOVE REAR DISC BRAKE PAD WEAR INDICATOR PLATE**
   (a) Remove the indicator plate from the inner side of the brake pad.

8. **REMOVE REAR DISC BRAKE PAD SUPPORT PLATE**
   (a) Remove the 4 pad support plates from the disc brake cylinder mounting.

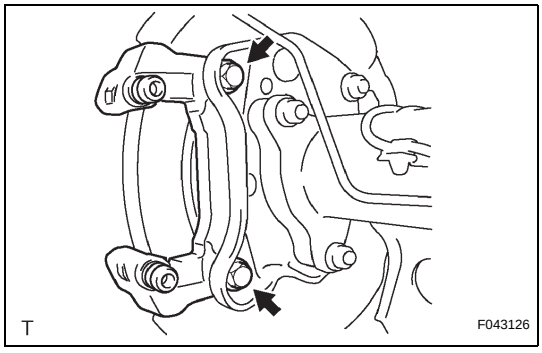

9. **REMOVE REAR DISC BRAKE CYLINDER MOUNTING**
   (a) Remove the 2 bolts and disc brake cylinder mounting.

10. **REMOVE REAR DISC BRAKE CYLINDER SLIDE BUSH**
    (a) Remove the slide bush from the disc brake cylinder mounting.

11. **REMOVE REAR DISC BRAKE BUSH DUST BOOT**
    (a) Remove the dust boot from the disc brake cylinder mounting.

12. **REMOVE REAR DISC BRAKE CYLINDER HOLE PLUG**
    (a) Remove the hole plug from the disc brake cylinder mounting.

13. REMOVE REAR DISC

(a) Place matchmarks on the disc and axle hub and remove the disc.

DISASSEMBLY

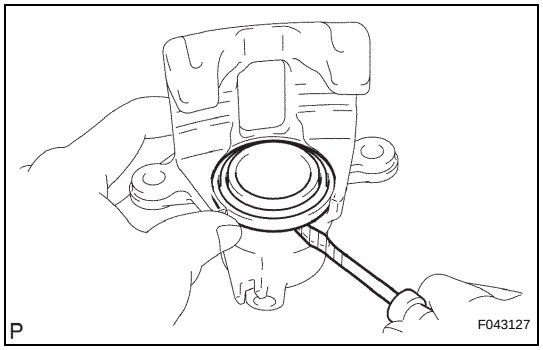

1. REMOVE CYLINDER BOOT

(a) Using a screwdriver, remove the cylinder boot from the disc brake cylinder.

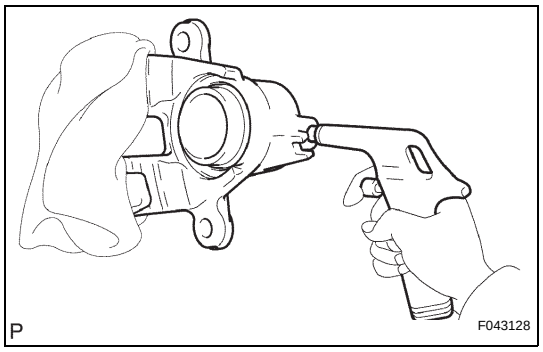

2. REMOVE REAR DISC BRAKE PISTON

(a) Place a shop rag or piece of cloth between the piston and disc brake cylinder.

(b) Apply compressed air to remove the piston from the disc brake cylinder.

CAUTION:
Do not place your fingers in front of the piston when applying compressed air.
NOTICE:
Do not spatter the brake fluid.

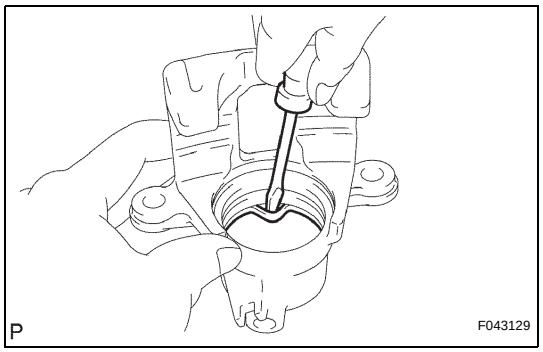

3. REMOVE PISTON SEAL

(a) Using a screwdriver, remove the piston seal from the disc brake cylinder.

NOTICE:
Do not damage the inner surface or piston seal groove of the cylinder.

4. REMOVE REAR DISC BRAKE BLEEDER PLUG CAP

5. REMOVE REAR DISC BRAKE BLEEDER PLUG

BR

INSPECTION

1. INSPECT BRAKE CYLINDER AND PISTON

(a) Check the cylinder bore and piston for rust and scoring.
If necessary, replace the disc brake cylinder and piston.

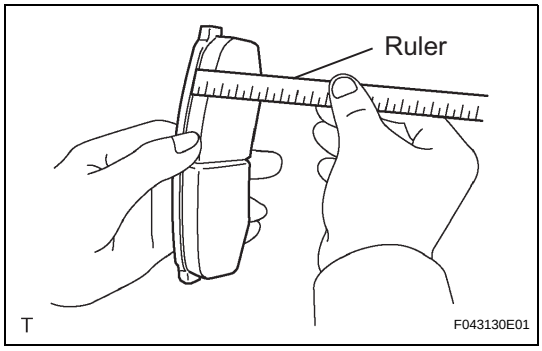

2. INSPECT PAD LINING THICKNESS

(a) Using a ruler, measure the pad lining thickness.
Standard thickness:
10.0 mm (0.394 in.)
Minimum thickness:
1.0 mm (0.039 in.)
If the pad lining thickness is equal to or less than the minimum thickness, replace the disc brake pad kit.

3. INSPECT REAR DISC BRAKE PAD SUPPORT PLATE

(a) Make sure that the support plates have sufficient rebound, that there is no deformation, cracks or wear, and that all rust and dirt are removed.
If necessary, replace the disc brake pad support plate.

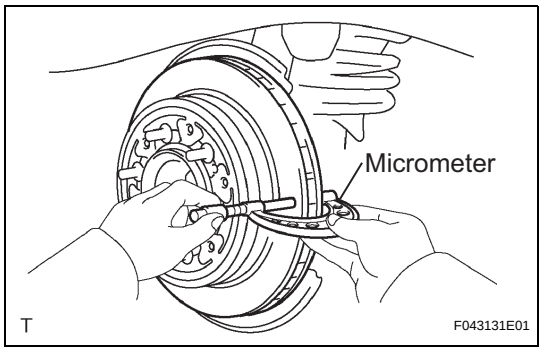

4. INSPECT DISC THICKNESS

(a) Using a micrometer, measure the disc thickness.
Standard thickness:
18.0 mm (0.709 in.)
Minimum thickness:
16.0 mm (0.630 in.)
If the disc thickness is less than the minimum, replace the rear disc.

5. INSPECT DISC RUNOUT

(a) Check the bearing play in the axial direction and check for the axle hub runout (See page AH-2).

(b) Provisionally fasten the rear disc together with the hub nuts.
Torque: 112 N*m (1,137 kgf*cm, 82 ft.*lbf)

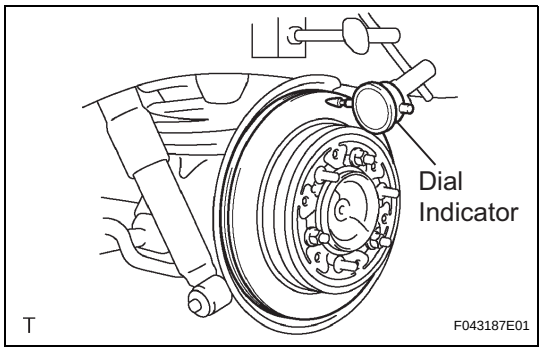

(c) Using a dial indicator, measure the disc runout 10 mm (0.39 in.) away from the outer edge of the rear disc.
Maximum disc runout:
0.20 mm (0.0079 in.)
If the runout exceeds the maximum value, change the installation positions of the disc and axle to make the minimum runout. If the runout exceeds the maximum even when the installation positions are changed, grind the disc. If the disc thickness is less than the minimum, replace the rear disc.

REASSEMBLY

1. TEMPORARILY TIGHTEN REAR DISC BRAKE BLEEDER PLUG

2. INSTALL REAR DISC BRAKE BLEEDER PLUG CAP

3. INSTALL PISTON SEAL

(a) Apply lithium soap base glycol grease to a new piston seal.

(b) Install the piston seal onto the disc brake cylinder.

NOTICE:
Securely install the piston seal into the groove of the disc brake cylinder.

4. INSTALL REAR DISC BRAKE PISTON

(a) Apply lithium soap base glycol grease to the piston.

(b) Install the piston into the disc brake cylinder.

NOTICE:
Do not forcibly install the piston into the disc brake cylinder.

5. INSTALL CYLINDER BOOT

(a) Apply lithium soap base glycol grease to a new cylinder boot.

(b) Install the cylinder boot onto the disc brake cylinder.

NOTICE:
Securely install the cylinder boot into the grooves of the disc brake cylinder and piston.

BR

INSTALLATION

1. INSTALL REAR DISC

(a) Align the matchmarks of the disc and axle hub and install the disc.

NOTICE:

When replacing the disc, select the position that gives the minimum disc runout.

2. INSTALL REAR DISC BRAKE CYLINDER HOLE PLUG

(a) Install a new hole plug onto the disc brake cylinder mounting.

3. INSTALL REAR DISC BRAKE BUSH DUST BOOT

(a) Apply lithium soap base glycol grease to a new dust boot.

(b) Install the dust boot onto the disc brake cylinder mounting.

4. INSTALL REAR DISC BRAKE CYLINDER SLIDE BUSH

(a) Apply lithium soap base glycol grease to a new slide bush.

(b) Install the slide bush onto the disc brake cylinder mounting.

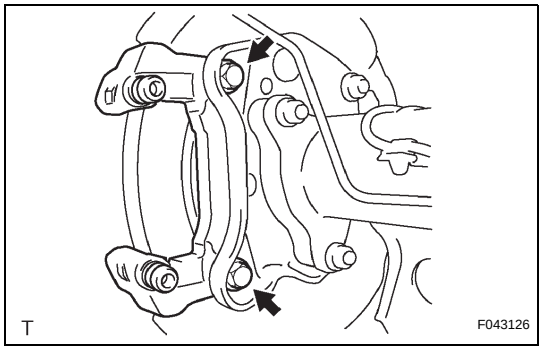

5. INSTALL REAR DISC BRAKE CYLINDER MOUNTING

(a) Install the disc brake cylinder mounting with the 2 bolts and 2 washers.

Torque: 105 N*m (1,071 kgf*cm, 78 ft.*lbf)

6. INSTALL REAR DISC BRAKE PAD SUPPORT PLATE

(a) Install the 4 pad support plates onto the disc brake cylinder mounting.

7. INSTALL REAR DISC BRAKE PAD WEAR INDICATOR PLATE

(a) Install the indicator plate onto the inner side brake pad.

HINT:

Install the indicator plate facing downward.

8. INSTALL REAR DISC BRAKE ANTI SQUEAL SHIM

NOTICE:

If necessary, replace the anti squeal shim when replacing the brake pad.

(a) Install the 2 anti squeal shims onto the brake pads.

9. INSTALL REAR DISC BRAKE PAD

(a) Install the 2 disc brake pads with anti squeal shims onto the disc brake cylinder mounting.

NOTICE:

There should be no oil or grease on the friction surfaces of the disc brake pads or the rear disc.

10. INSTALL REAR DISC BRAKE CYLINDER ASSEMBLY

(a) Apply lithium soap base glycol grease to the 2 slide pins.

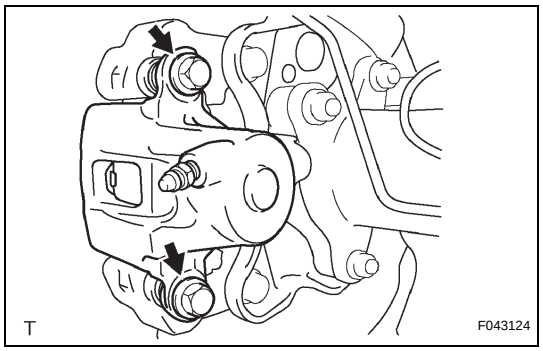

(b) Install the disc brake cylinder onto the disc brake cylinder mounting with the 2 slide pins.
Torque: 88 N*m (897 kgf*cm, 65 ft.*lbf)

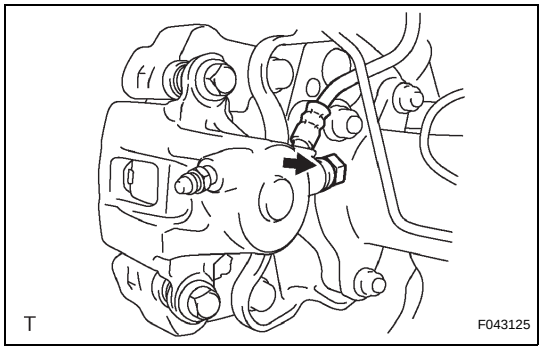

11. INSTALL REAR FLEXIBLE HOSE
(a) Install the flexible hose with the union bolt and a new gasket.
Torque: 31 N*m (316 kgf*cm, 23 ft.*lbf)

12. FILL RESERVOIR WITH BRAKE FLUID (See page BR-5)

13. BLEED BRAKE LINE (See page BR-5)

14. CHECK FLUID LEVEL IN RESERVOIR (See page BR-7)

15. CHECK FOR BRAKE FLUID LEAKAGE

16. INSTALL REAR WHEEL
Torque: 112 N*m (1,137 kgf*cm, 82 ft.*lbf)

REAR BRAKE FLEXIBLE HOSE

COMPONENTS

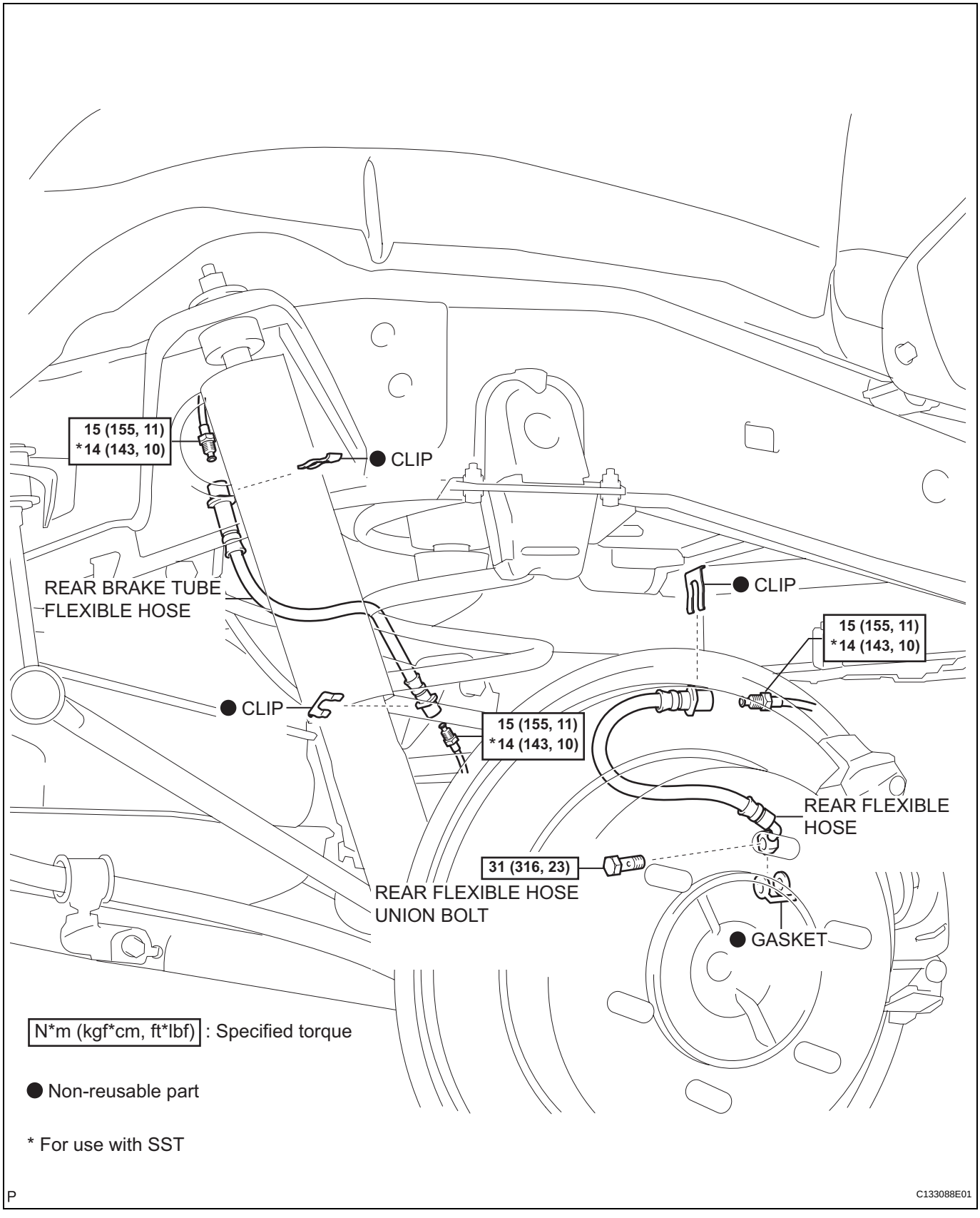

BR

REMOVAL

1. REMOVE REAR WHEEL

2. DRAIN BRAKE FLUID

NOTICE:

Immediately wash off any brake fluid that comes into contact with any painted surfaces.

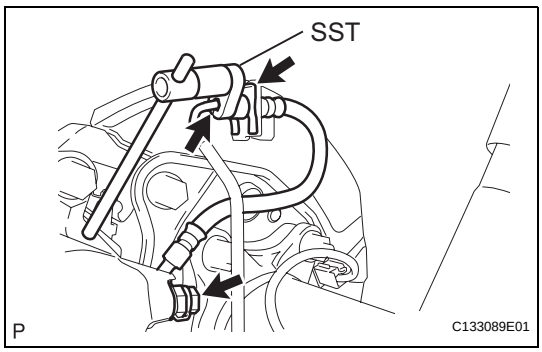

3. REMOVE REAR FLEXIBLE HOSE

(a) Remove the union bolt and gasket and separate the flexible hose from the disc brake cylinder.

HINT:

Use a container to collect the brake fluid as it drains out.

(b) Using SST, separate the brake tube.

SST 09023-00101

HINT:

Use a container to collect the brake fluid as it drains out.

(c) Remove the clip and flexible hose.

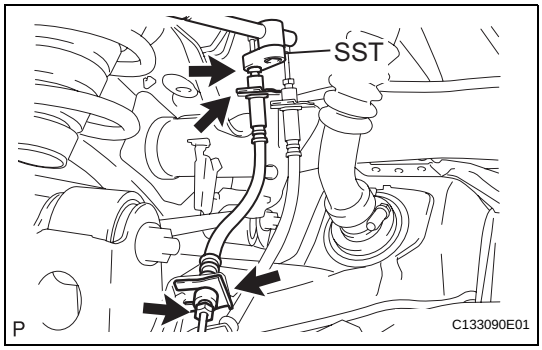

4. REMOVE REAR BRAKE TUBE FLEXIBLE HOSE

(a) Using SST, separate the brake tubes.

SST 09023-00101

HINT:

Use a container to collect the brake fluid as it drains out.

(b) Remove the 2 clips and flexible hose.

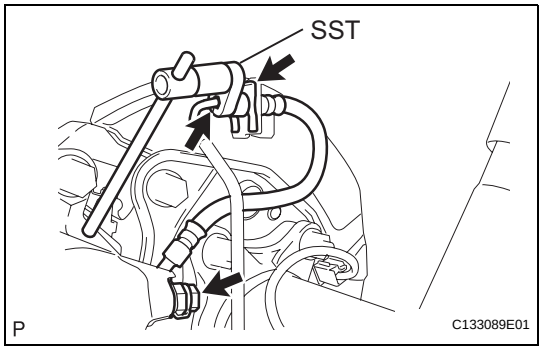

INSTALLATION

1. INSTALL REAR FLEXIBLE HOSE

(a) Install the flexible hose with a new clip.

(b) Using SST, install the brake tube onto the flexible hose.

SST 09023-00101

Torque: for use without SST

15 N*m (155 kgf*cm, 11 ft.*lbf)

for use with SST

14 N*m (143 kgf*cm, 10 ft.*lbf)

HINT:

- Use a torque wrench with a fulcrum length of 300 mm (11.81 in.).
- This torque value is effective when SST is parallel to the torque wrench.

(c) Install the flexible hose onto the disc brake cylinder with the union bolt and a new gasket.

Torque: 31 N*m (316 kgf*cm, 23 ft.*lbf)

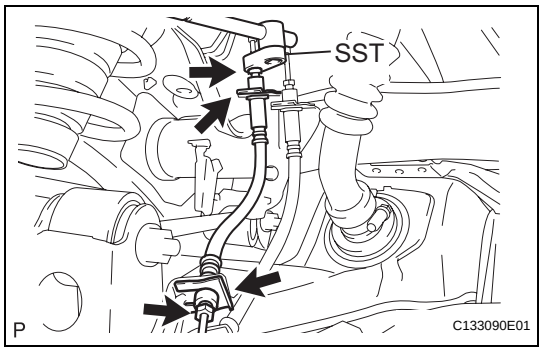

2. INSTALL REAR BRAKE TUBE FLEXIBLE HOSE

(a) Install the flexible hose with 2 new clips.

(b) Using SST, install the 2 brake tubes onto the flexible hose.

SST 09023-00101

Torque: for use without SST

15 N*m (155 kgf*cm, 11 ft.*lbf)

for use with SST

14 N*m (143 kgf*cm, 10 ft.*lbf)

HINT:

- Use a torque wrench with a fulcrum length of 300 mm (11.81 in.).
- This torque value is effective when SST is parallel to the torque wrench.

3. FILL RESERVOIR WITH BRAKE FLUID (See page BR-5)

4. BLEED BRAKE LINE (See page BR-5)

5. CHECK FLUID LEVEL IN RESERVOIR (See page BR-7)

6. CHECK FOR BRAKE FLUID LEAKAGE

7. INSTALL REAR WHEEL

Torque: 112 N*m (1,137 kgf*cm, 82 ft.*lbf)

VEHICLE STABILITY CONTROL SYSTEM

PRECAUTION

1. TROUBLESHOOTING PRECAUTION

- When there is a malfunction in the contact points of the terminals or installation problems with parts, removal and reinstallation of the suspected problem parts may return the system to its normal condition either completely or temporarily.
- In order to determine the location of the malfunction, be sure to check the engine conditions at the time the malfunction occurred, through data such as DTC and freeze frame data outputs. Record this information before disconnecting any connectors and removing or installing any parts.
- Since the Vehicle Stability Control system may be influenced by malfunctions in other systems, be sure to check for DTCs in other systems.
- Be sure to remove and reinstall the hydraulic brake booster and each sensor with the ignition switch OFF unless specified in the inspection procedure.
- When removing and installing the hydraulic brake booster and each sensor, be sure to check that the normal display is output during a test mode inspection and a DTC output inspection after reinstalling all the parts.
- After replacing the master cylinder solenoid (skid control ECU) and/or the yaw rate sensor and deceleration sensor, be sure to perform the yaw rate sensor and deceleration sensor zero point calibration (See page BC-24).
- The CAN communication system is used for data communication between the skid control ECU, the steering angle sensor, and the yaw rate sensor (the deceleration sensor is included).
- If there is trouble in the CAN communication line, the DTC relating to the communication line is output. If a DTC relating to the CAN communication line is output, repair the malfunction in the communication line and troubleshoot the Vehicle Stability Control system.
- Since the CAN communication line has a specific length and route, it cannot be repaired temporarily with a bypass wire.

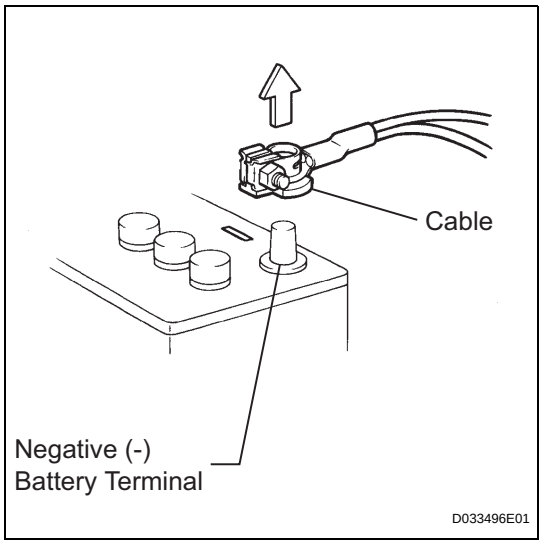

2. DISCONNECT AND RECONNECT CABLE OF NEGATIVE BATTERY TERMINAL

(a) Before performing electronic work, disconnect the cable from the negative (-) battery terminal in order to prevent it from shorting and burning out.

(b) Before disconnecting and reconnecting the battery cable, turn the ignition switch OFF and the headlight dimmer switch OFF. Then loosen the terminal nut completely. Do not damage the cable or terminal.

(c) When the battery cable is disconnected, the clock and radio settings and stored DTCs are erased. Therefore, before disconnecting the battery cable, make a note of them.

NOTICE:

When the cable is disconnected from the negative (-) battery terminal, initialize the following system(s) after the cable is reconnected.

System name	See procedure
METER / GAUGE SYSTEM	ME-10

PARTS LOCATION

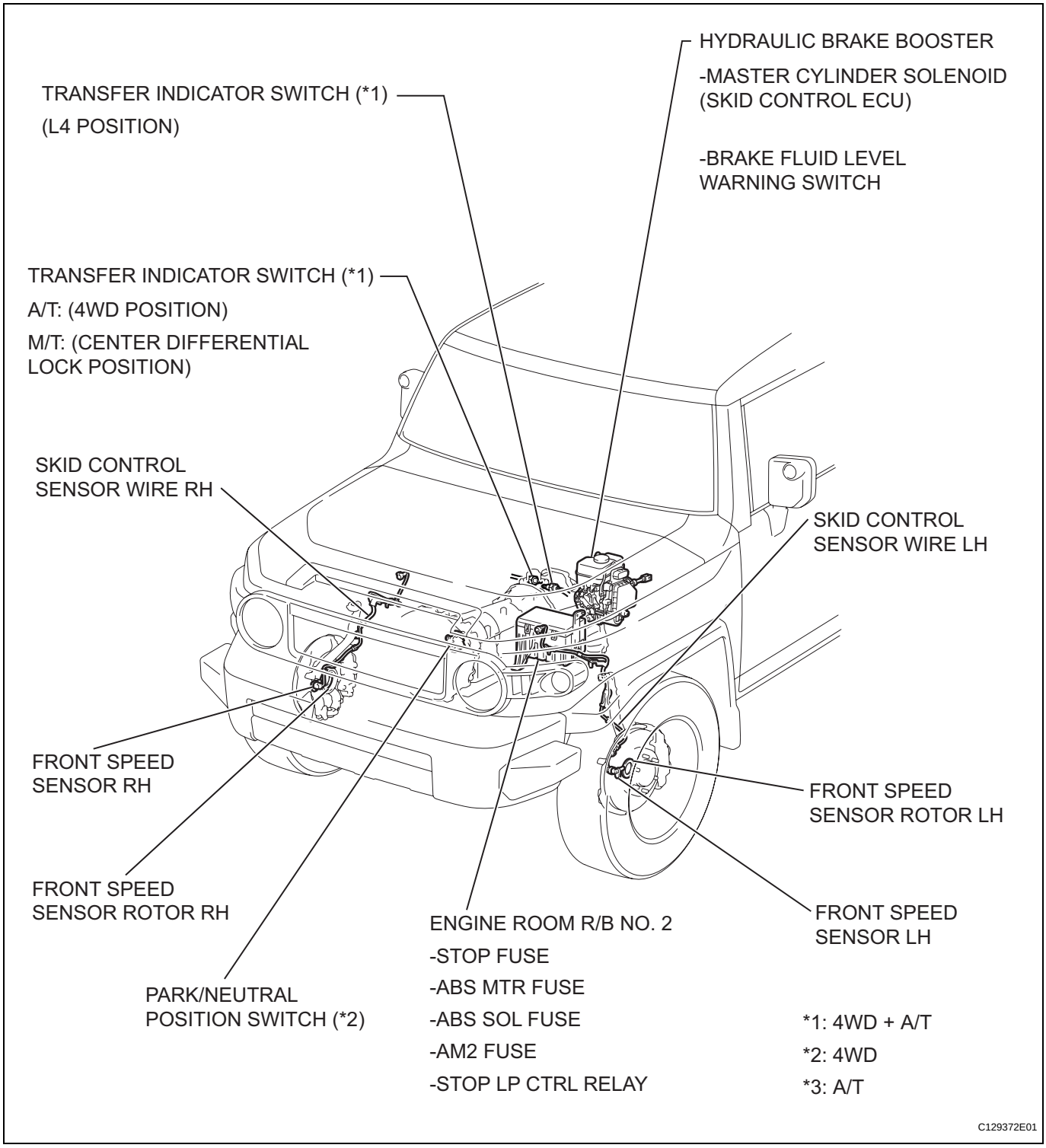

BC

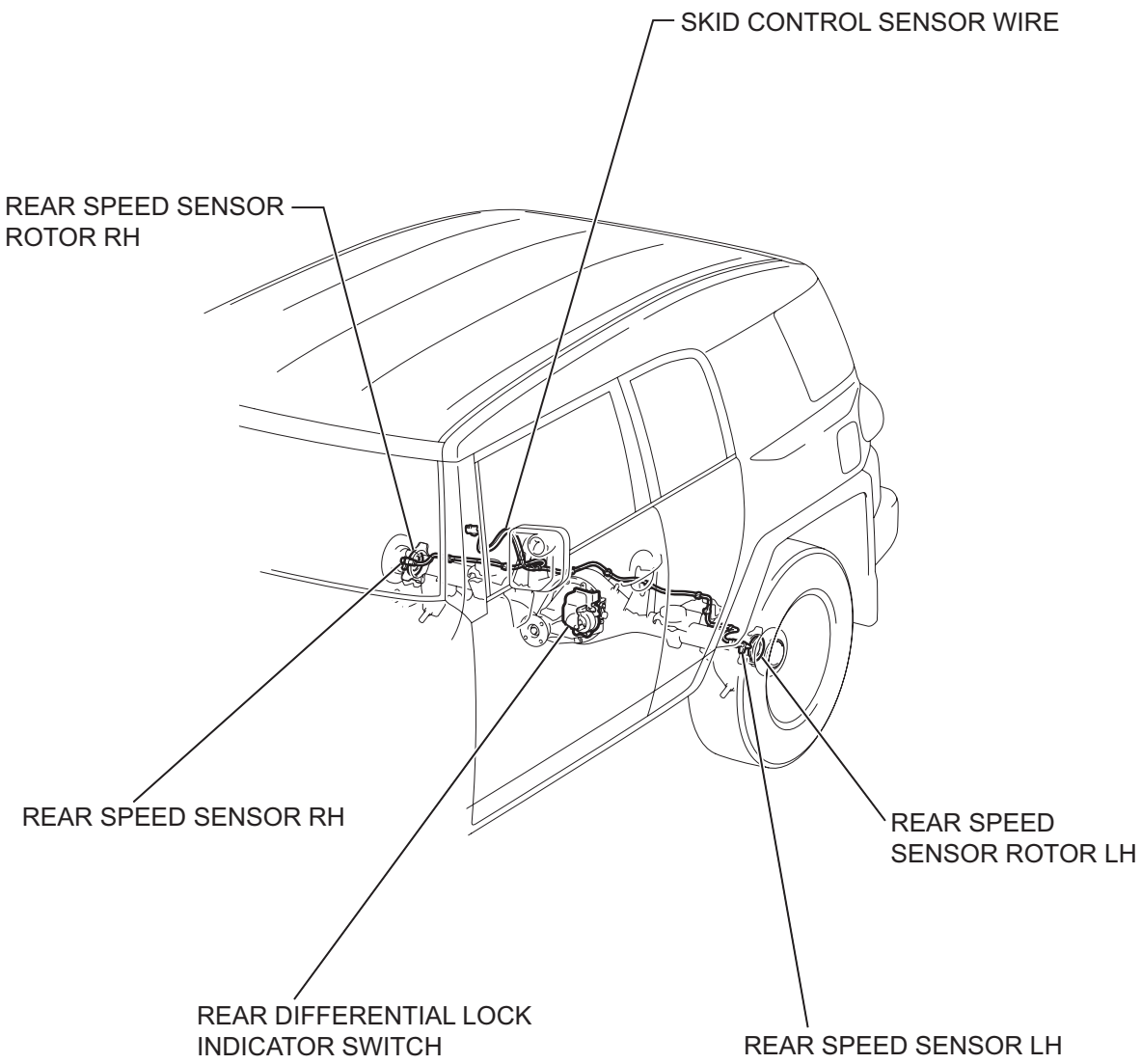
SKID CONTROL SENSOR WIRE
REAR SPEED SENSOR ROTOR RH
REAR SPEED SENSOR RH
REAR SPEED SENSOR ROTOR LH
REAR DIFFERENTIAL LOCK INDICATOR SWITCH
REAR SPEED SENSOR LH
C139135E01

BC

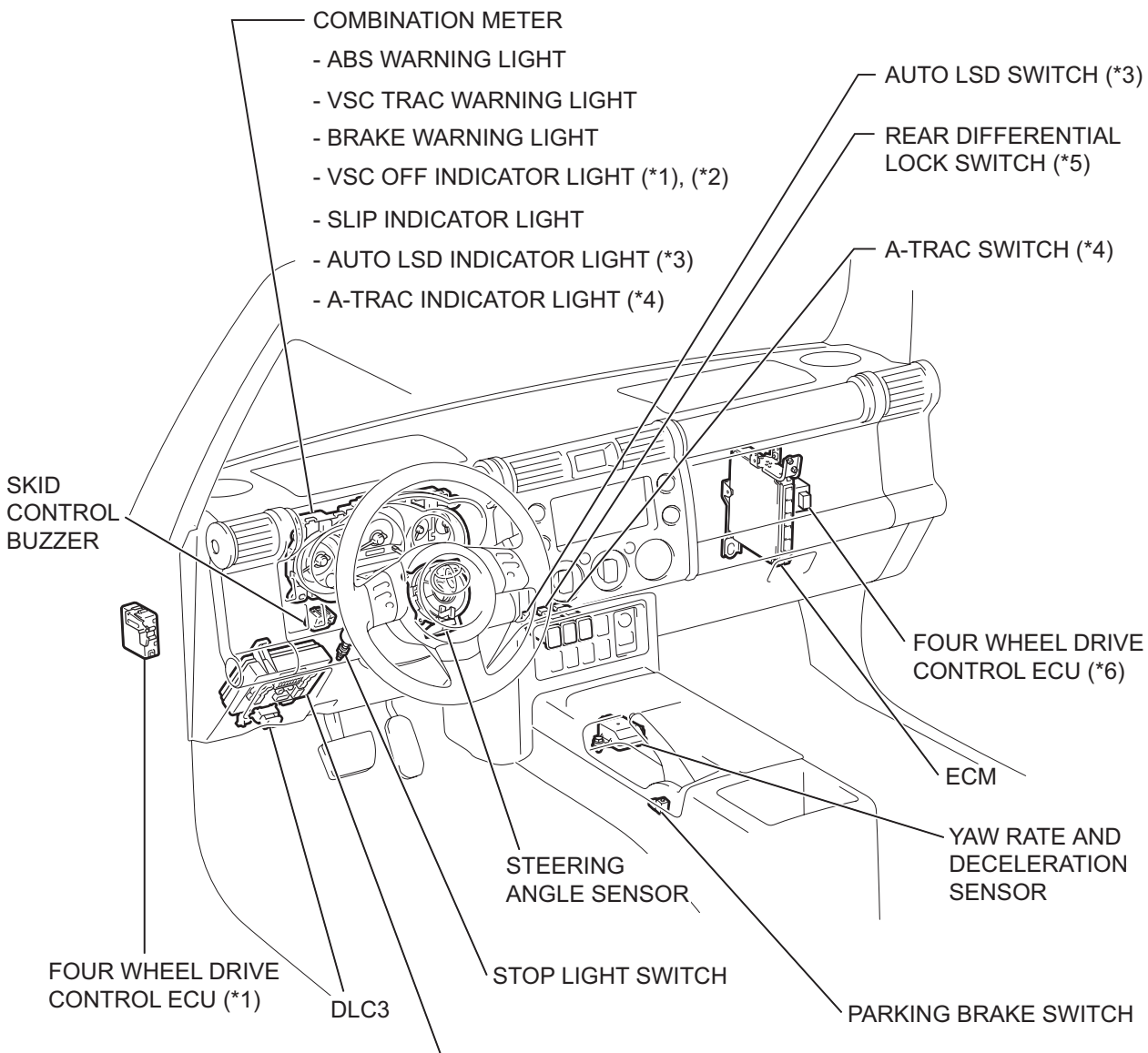

*1: 2WD with rear differential lock
*2: 4WD
*3: with AUTO LSD
*4: with A-TRAC
*5: with rear differential lock
*6: 4WD + A/T

P

C135288E01

SYSTEM DIAGRAM

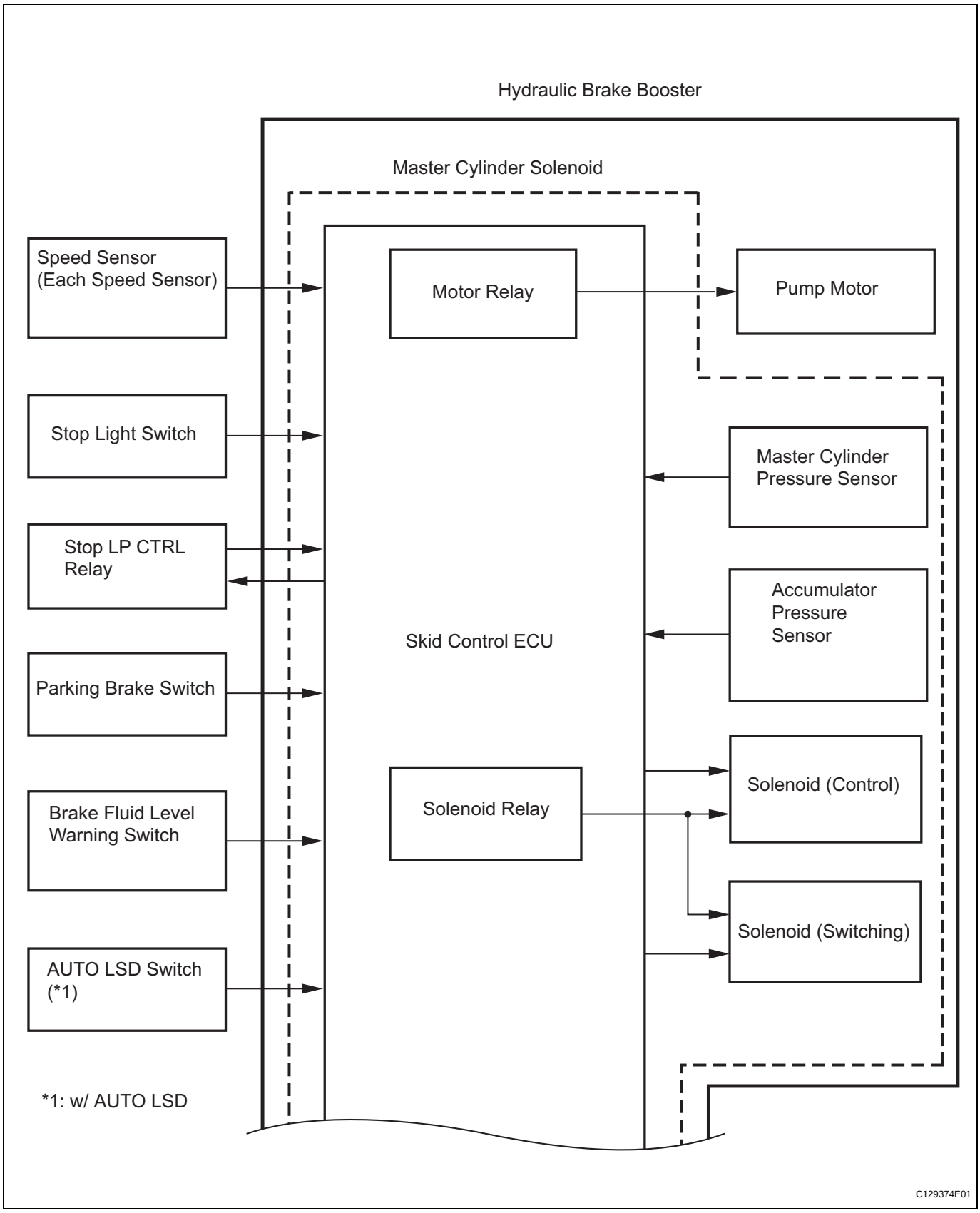

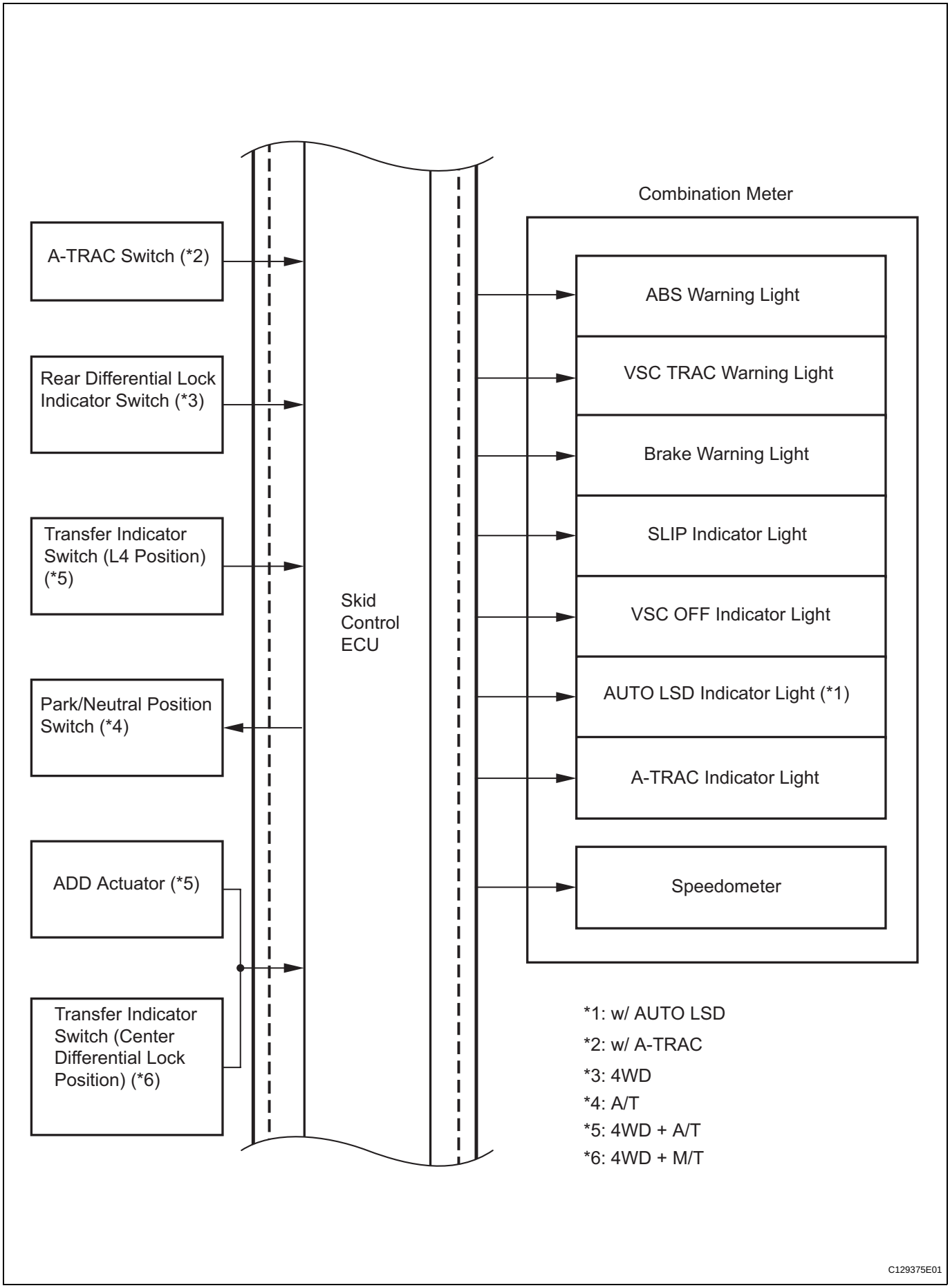
A-TRAC Switch (*2)
Rear Differential Lock Indicator Switch (*3)
Transfer Indicator Switch (L4 Position) (*5)
Park/Neutral Position Switch (*4)
ADD Actuator (*5)
Transfer Indicator Switch (Center Differential Lock Position) (*6)
Skid Control ECU
Combination Meter
ABS Warning Light
VSC TRAC Warning Light
Brake Warning Light
SLIP Indicator Light
VSC OFF Indicator Light
AUTO LSD Indicator Light (*1)
A-TRAC Indicator Light
Speedometer
*1: w/ AUTO LSD
*2: w/ A-TRAC
*3: 4WD
*4: A/T
*5: 4WD + A/T
*6: 4WD + M/T
C129375E01

BC

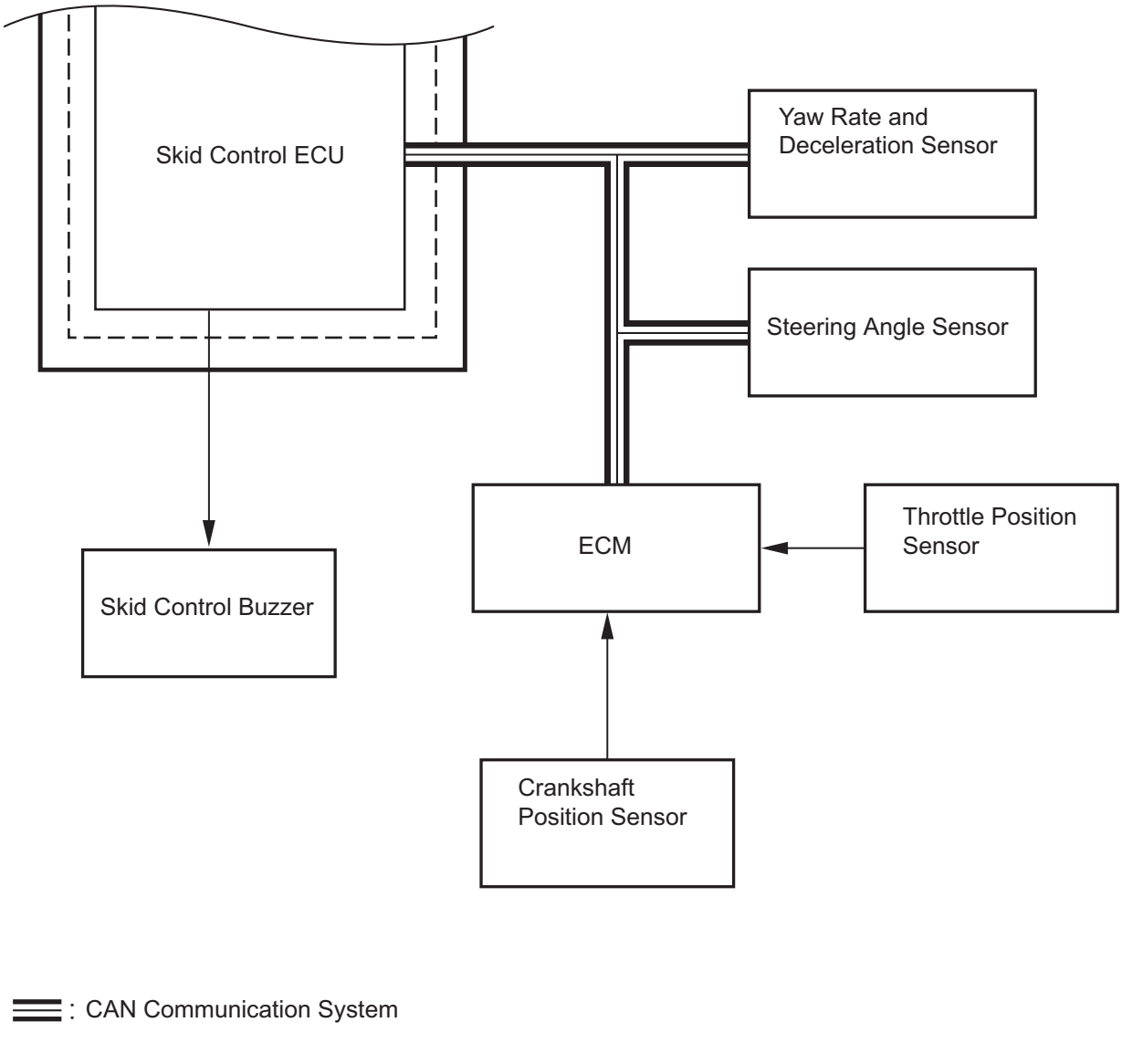

Transmitting ECU (Transmitter)	Receiving ECU	Signals	Communication Method
ECM	Skid control ECU	Throttle position signal	CAN communication system
ECM	Skid control ECU	Engine revolution signal	CAN communication system
ECM	Skid control ECU	Accelerator pedal position signal	CAN communication system
ECM	Skid control ECU	Intake temperature signal	CAN communication system
Skid control ECU	ECM	Yaw rate and deceleration signal	CAN communication system
Skid control ECU	ECM	Steering angle signal	CAN communication system
Skid control ECU	ECM	Throttle opening angle request signal	CAN communication system

SYSTEM DESCRIPTION

1. SYSTEM DESCRIPTION

HINT:
The skid control ECU forms a single unit with the hydraulic brake booster.

(a) ABS (Anti-lock Brake System)
The ABS helps prevent the wheels from locking when the brakes are applied firmly or when braking on a slippery surface.

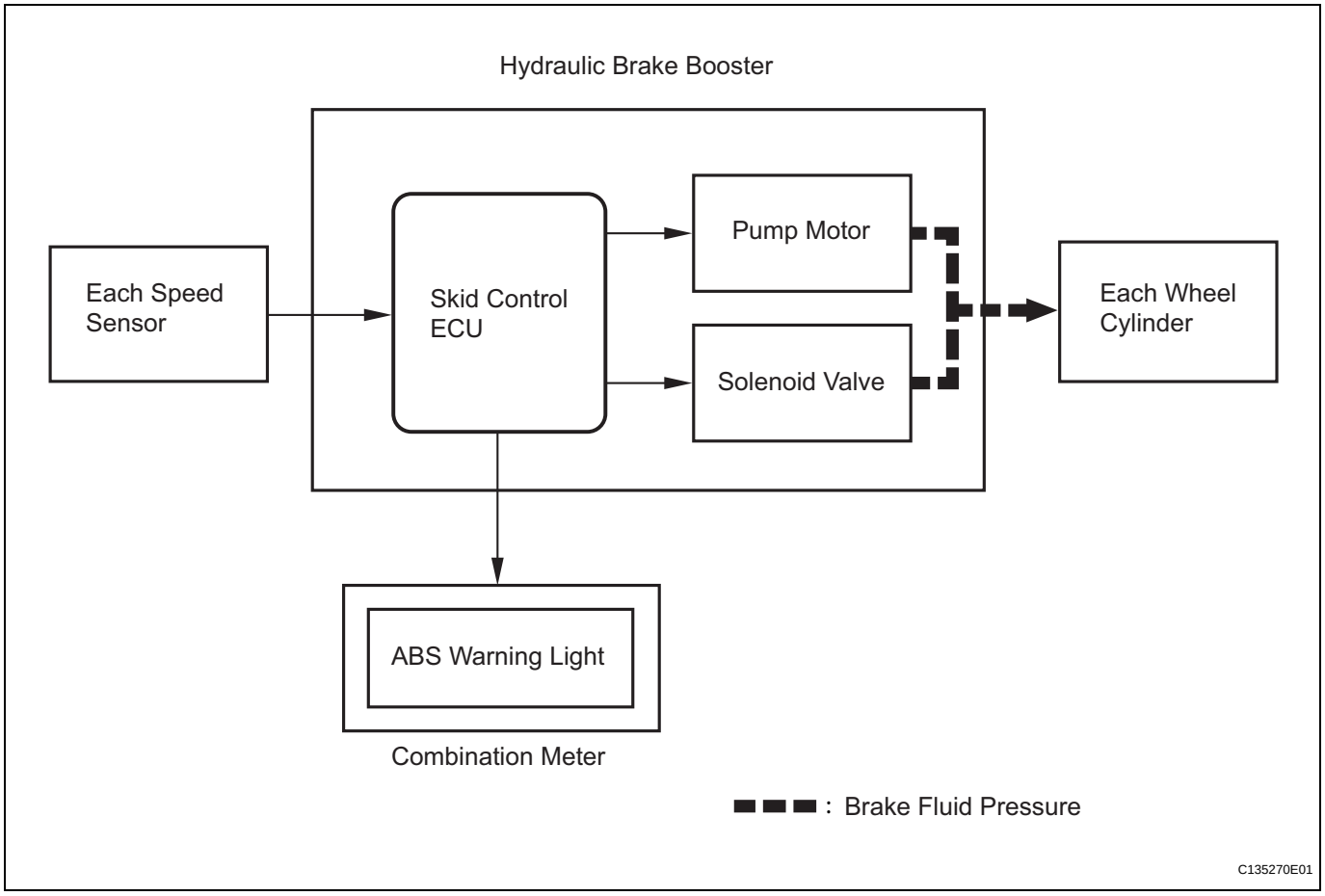

(1) Operation description
The skid control ECU detects the wheel lock condition by receiving vehicle speed signals from each speed sensor, and sends control signals to the pump motor and solenoid valves to prevent the wheels from locking by controlling the oil pressure of each wheel cylinder.
The ABS warning light comes on when the ABS system malfunctions.

(b) EBD (Electronic Brake force Distribution)
The EBD control utilizes ABS, realizing proper brake force distribution between the front and rear wheels in accordance with the driving conditions and vehicle load.
In addition, when braking while cornering, it also controls the brake forces of the right and left wheels, helping to maintain the vehicle behavior.

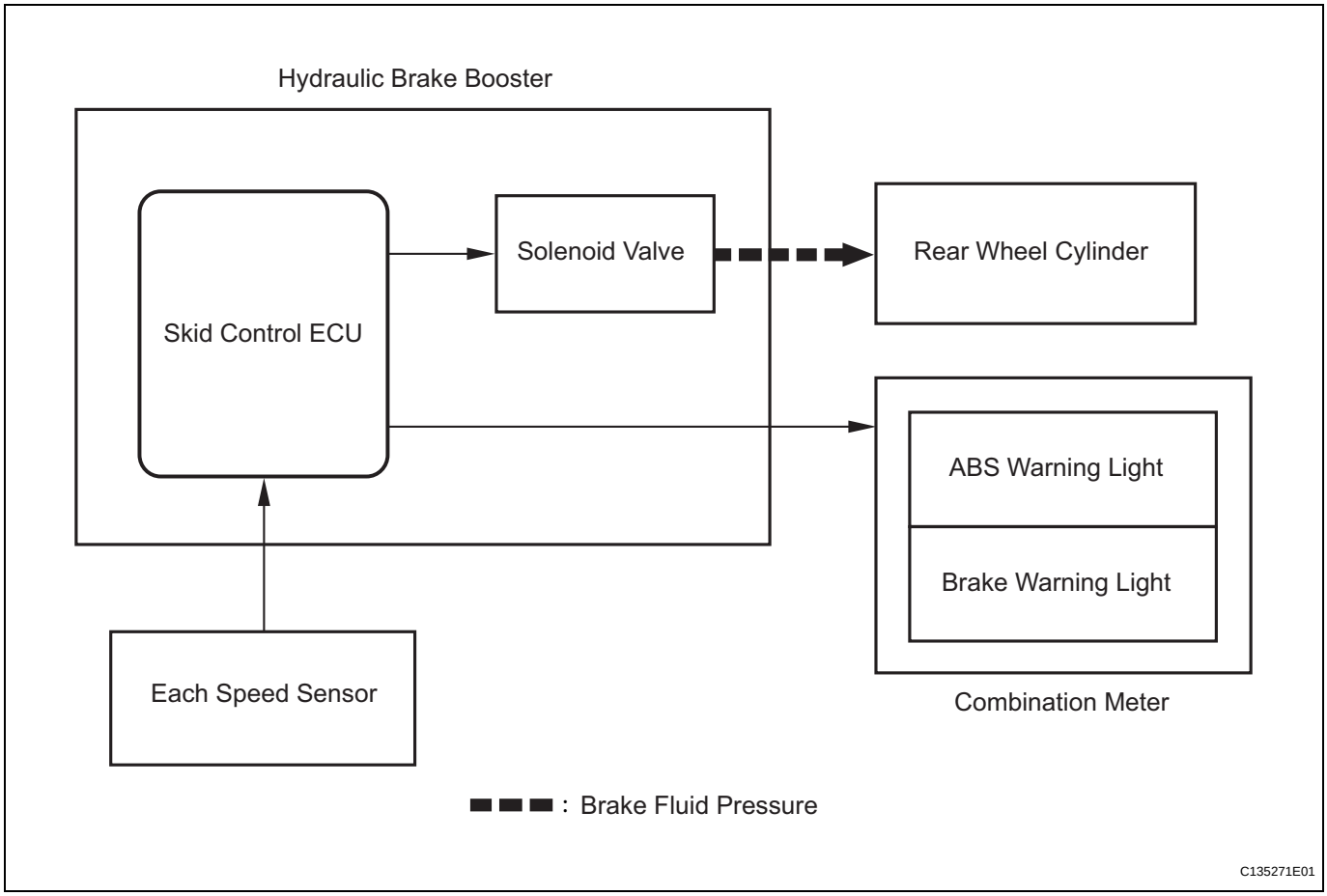

(1) Operation description
The skid control ECU receives the speed signals from each speed sensor to detect the slip condition of the wheels and sends the control signal to the solenoid.
The solenoid valves control the oil pressure of the rear wheel cylinder and divide the control power appropriately between the front and rear wheels and the right and left wheels.
Both of the ABS and the brake warning lights come on when the EBD system malfunctions.

(c) BA (Brake Assist)
The primary purpose of the brake assist system is to provide an auxiliary brake force to assist drivers who cannot generate a large enough brake force during emergency braking, thus helping to maximize the vehicle's brake performance.

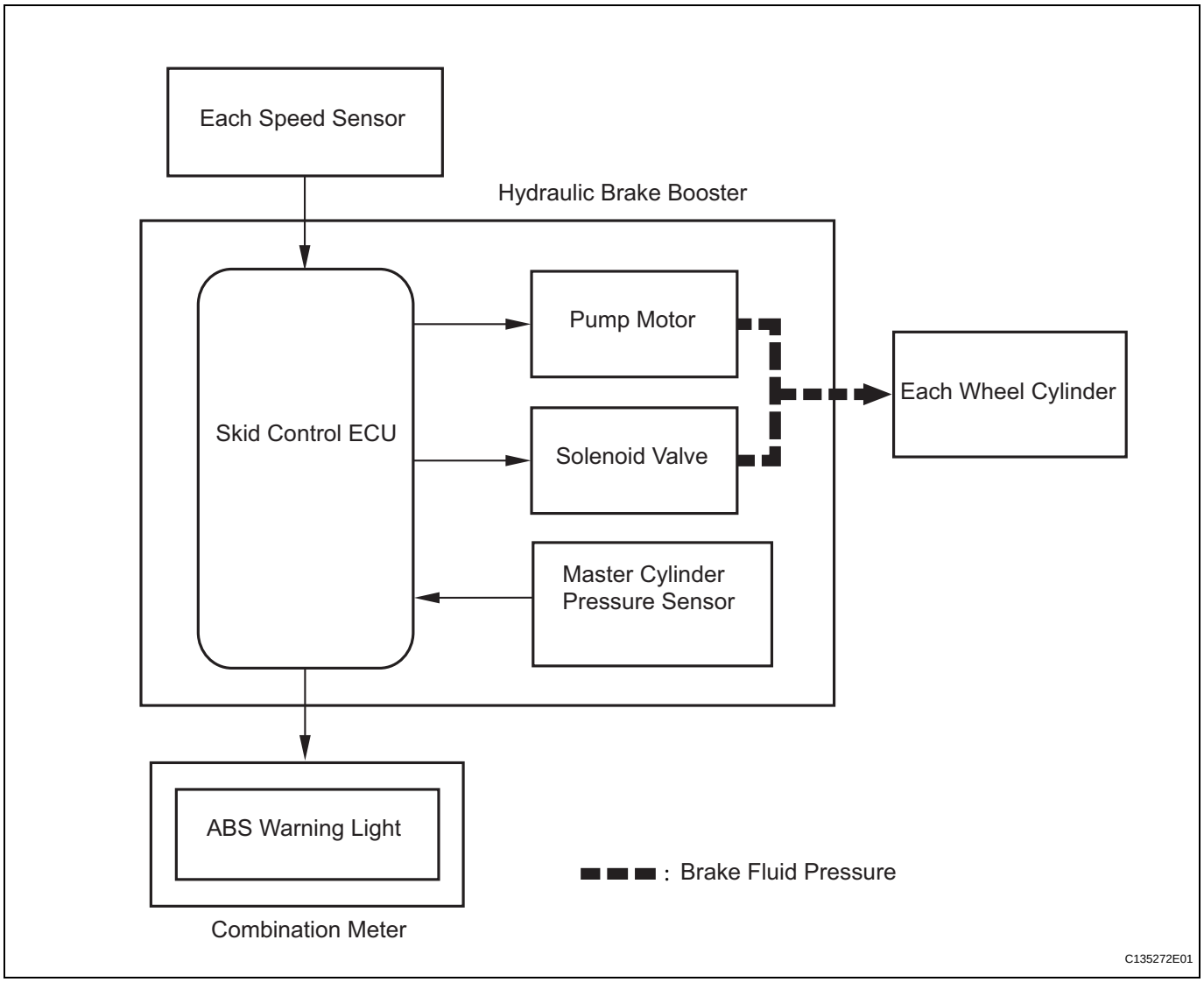

(1) Operation description
The skid control ECU receives the speed signals from each speed sensor and the fluid pressure signal from the master cylinder pressure sensor to determine whether brake assist is necessary. If brake assist is deemed necessary, the skid control ECU sends control signals to the pump motor and solenoid. The pump and the solenoid valves then control the pressure applied to each wheel cylinder.
The ABS warning light comes on when the BA system malfunctions.

(d) VSC (Vehicle Stability Control)
The VSC system helps prevent the vehicle from slipping sideways as a result of strong front wheel skid or strong rear wheel skid during cornering.

BC

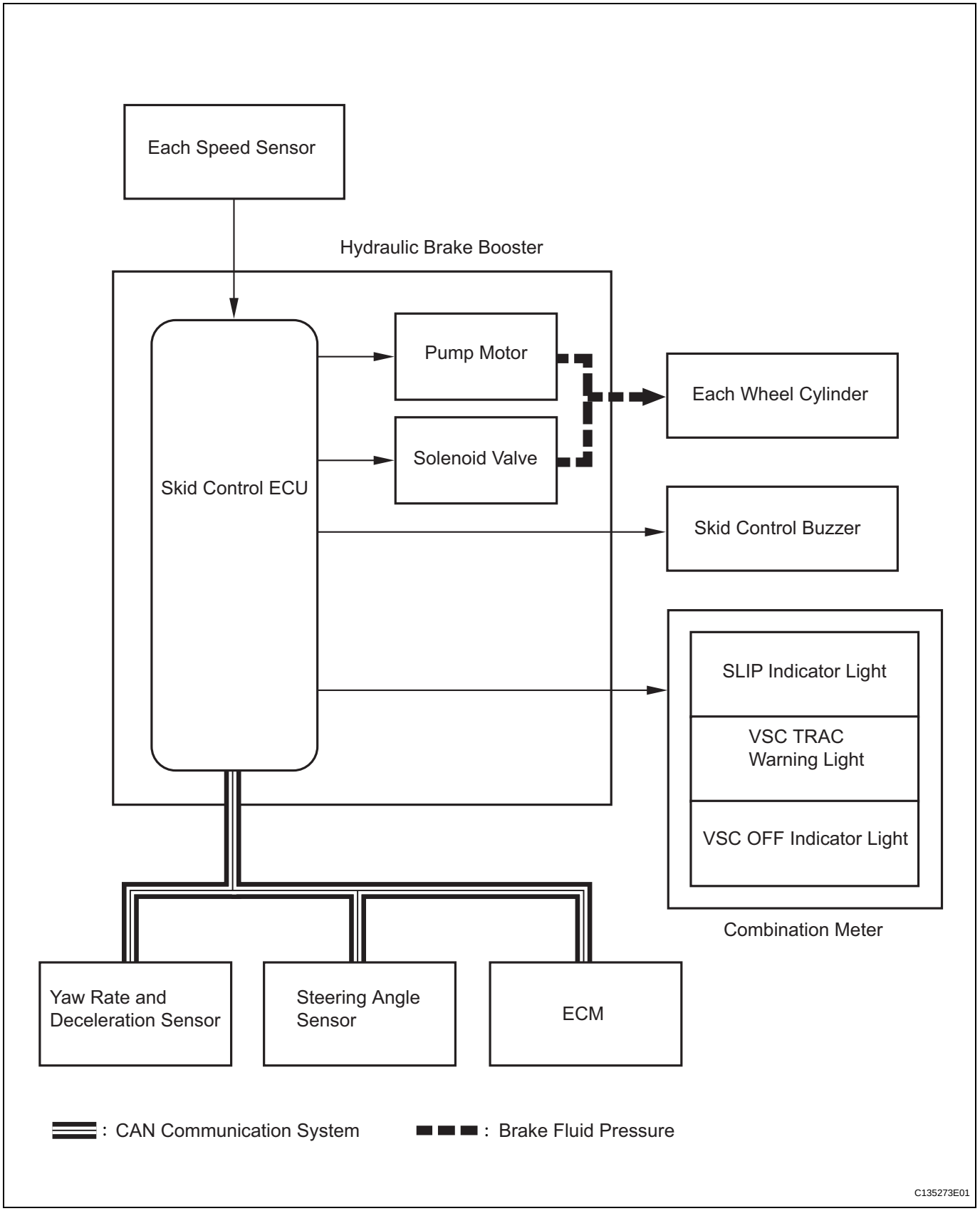

(1) Operation description
The skid control ECU determines the vehicle condition by receiving signals from the speed sensors, yaw rate and deceleration sensor and steering angle sensor. The skid control ECU controls the engine torque through the ECM via CAN communication, and brake fluid pressure through the pump and solenoid valves.
The SLIP indicator light blinks and the skid control buzzer sounds when the system is operating. The VSC TRAC warning light and the VSC OFF indicator light (for 2WD with rear differential lock or 4WD) come on when the VSC system malfunctions.

(e) TRAC (Traction Control)
The TRAC system helps prevent the drive wheels from slipping if the driver presses down on the accelerator pedal excessively when starting off or accelerating on a slippery surface.

BC

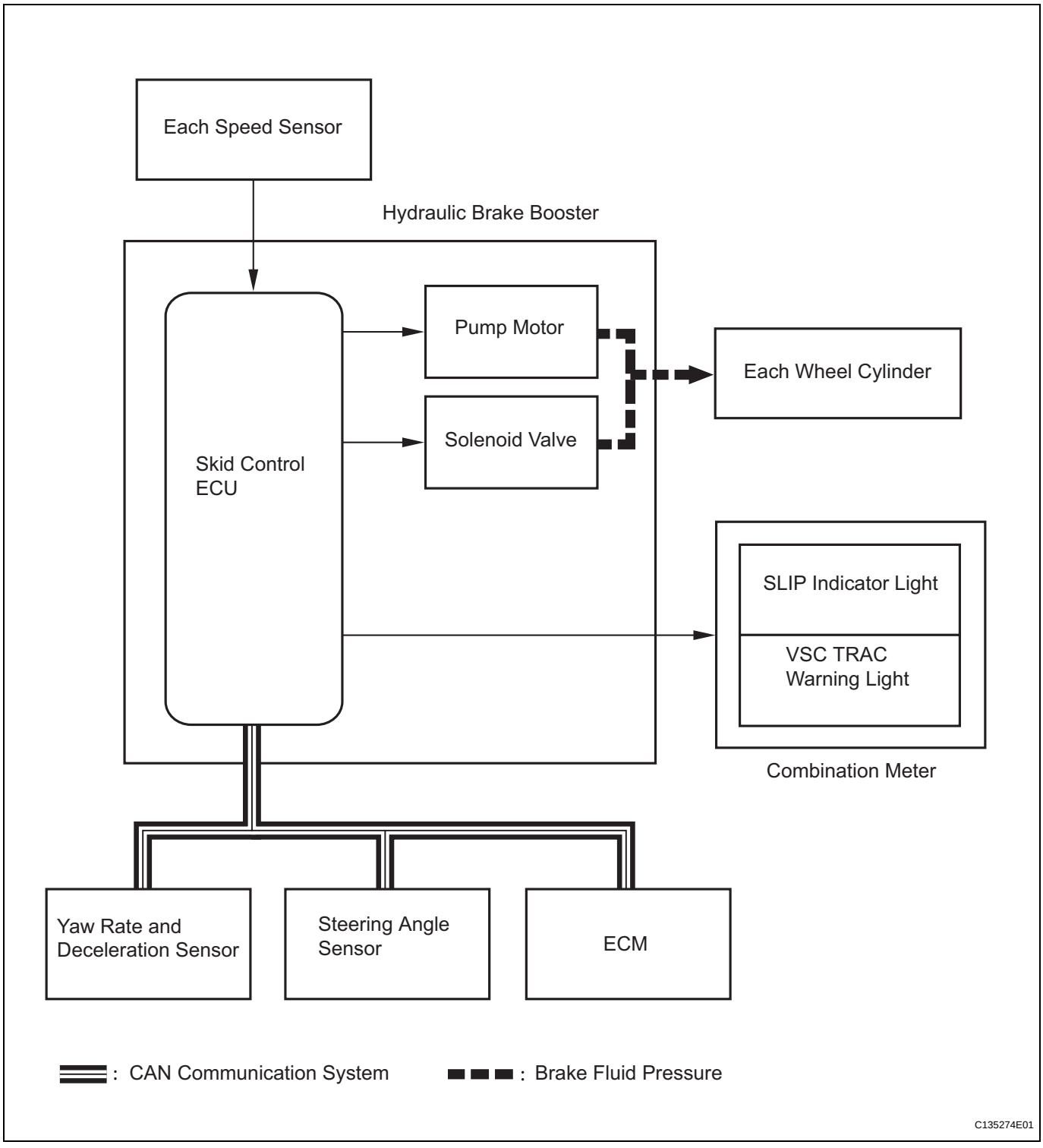

(1) Operation description

The skid control ECU detects the vehicle's slip condition by receiving signals from each speed sensor and the ECM via CAN communication. The skid control ECU controls engine torque through the ECM via CAN communication, and brake fluid pressure through the pump and solenoid valves.

The SLIP indicator light blinks when the system is operating. The VSC TRAC warning light and SLIP indicator light come on when the TRAC system malfunctions.

(f) A-TRAC (Active Traction Control)

During rugged off-road driving, this function controls the engine output and the brake fluid pressure that is applied to slipping wheels, and distributes the drive force that would have been lost through the slippage to the remaining wheels in order to achieve a LSD (Limited Slip Differential) effect. As a result, the vehicle's off-road drivability and ability to free itself from moguls have been increased.

HINT:

The A-TRAC system operates when 4WD mode is selected (4WD vehicles only).

BC

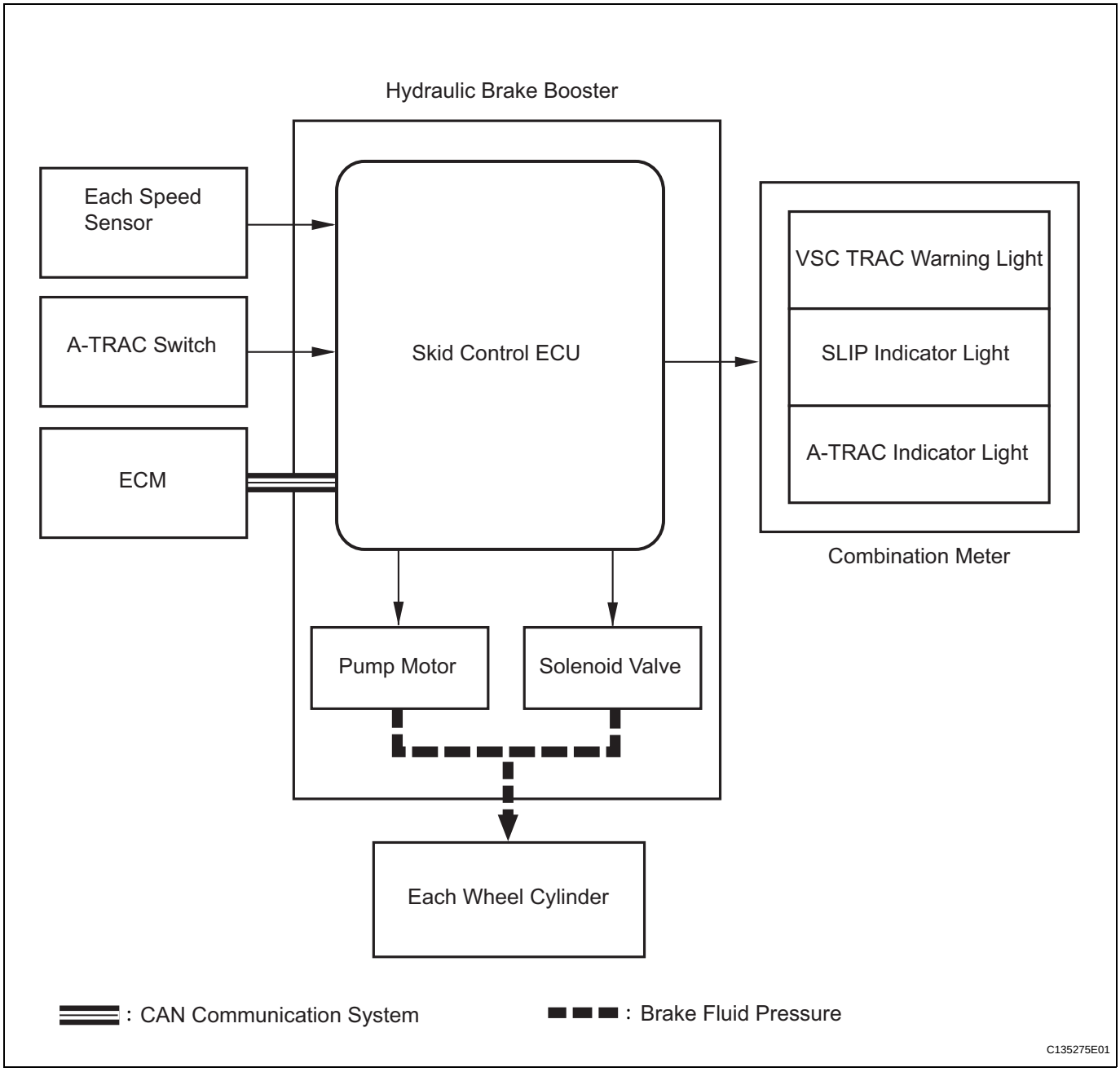
Hydraulic Brake Booster
Each Speed Sensor
A-TRAC Switch
ECM
Skid Control ECU
VSC TRAC Warning Light
SLIP Indicator Light
A-TRAC Indicator Light
Combination Meter
Pump Motor
Solenoid Valve
Each Wheel Cylinder
: CAN Communication System
: Brake Fluid Pressure
C135275E01

(1) Operation description

When the A-TRAC switch is pressed and the A-TRAC system is operative, the A-TRAC indicator light comes on. When the system is operating, the SLIP indicator light blinks.

The VSC TRAC warning light and SLIP indicator light come on when the A-TRAC system malfunctions.

HINT:

If the A-TRAC system operates constantly for a long time, the temperature of the actuator in the hydraulic brake booster may increase excessively. In such cases, the skid control buzzer sounds intermittently and the SLIP indicator light comes on. If this condition continues, the skid control buzzer sounds for approximately 1 second and the A-TRAC system is temporarily deactivated. After a while, the SLIP indicator light goes off and the A-TRAC system is reactivated. The vehicle can be driven normally while the A-TRAC system is deactivated.

(g) AUTO-LSD (Auto Limited Slip Differential)

The AUTO LSD operates with the AUTO LSD switch on and the accelerator pedal depressed. The TRAC system restrains brake pressure and reduces differential move, thus transmitting the drive torque to the other drive wheel to ensure stability under the following conditions:

- Wheels run off the road.
- Drive wheels run idle when starting on a slope with one wheel on snow/ice.

HINT:

Depressing the brake pedal cancels control of the AUTO LSD system.

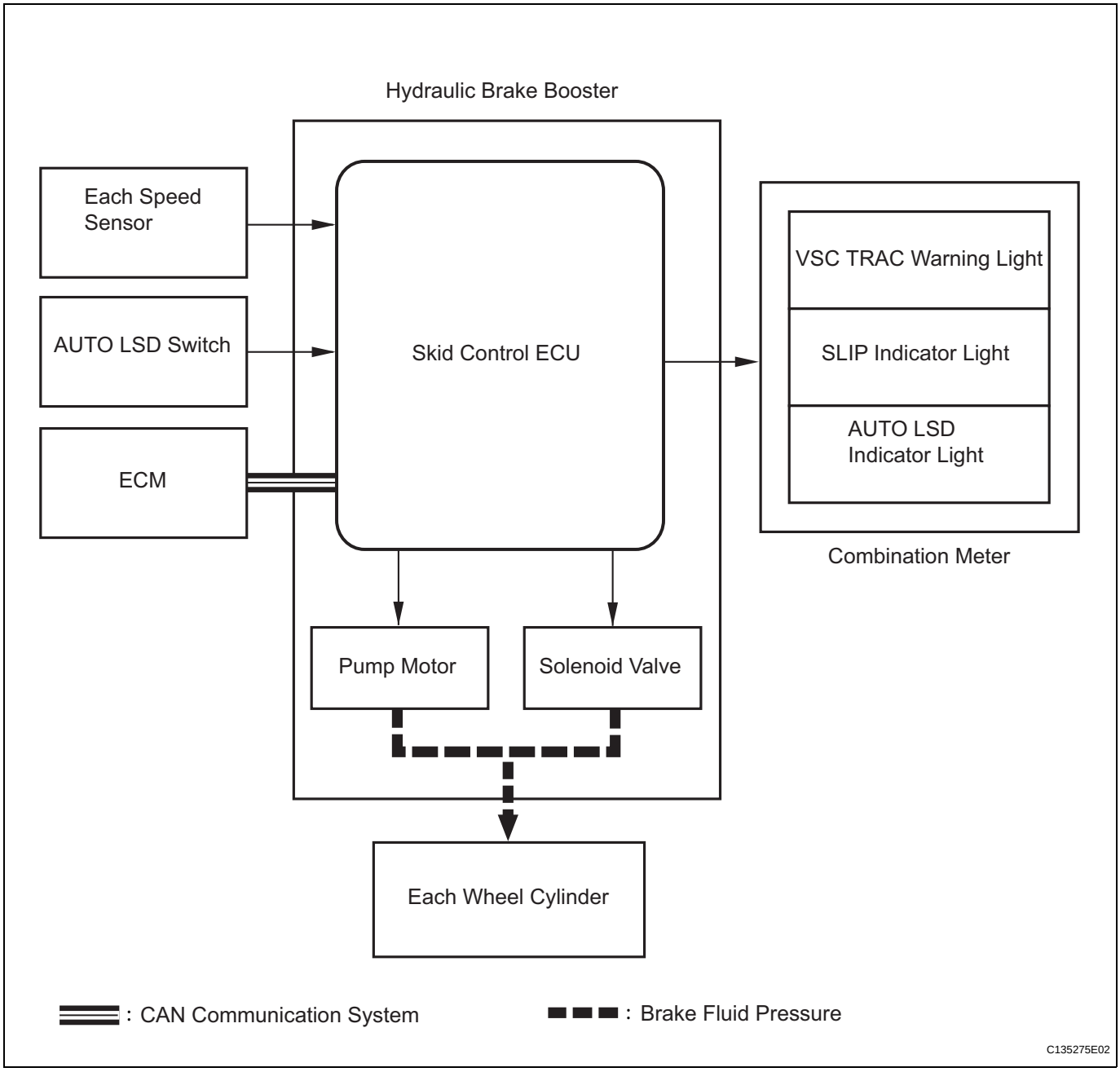
Hydraulic Brake Booster
Each Speed Sensor
AUTO LSD Switch
ECM
Skid Control ECU
VSC TRAC Warning Light
SLIP Indicator Light
AUTO LSD Indicator Light
Combination Meter
Pump Motor
Solenoid Valve
Each Wheel Cylinder
: CAN Communication System
: Brake Fluid Pressure
C135275E02

(1) Operation description

When the AUTO LSD switch is pressed and the AUTO LSD system is operative, the AUTO LSD indicator light comes on. When the system is operating, the SLIP indicator light blinks.

The VSC TRAC warning light and SLIP indicator light come on when the AUTO LSD system malfunctions.

HINT:

If the AUTO LSD system operates constantly for a long time, the temperature of the actuator in the hydraulic brake booster may increase excessively. In such cases, the skid control buzzer sounds intermittently and the SLIP indicator light comes on. If this condition continues, the skid control buzzer sounds for approximately 1 second and the AUTO LSD system is temporarily deactivated. After a while, the SLIP indicator light goes off and the AUTO LSD system is reactivated. The vehicle can be driven normally while the AUTO LSD system is deactivated.

2. ABS with EBD, BA, TRAC, AUTO LSD, A-TRAC and VSC OPERATION

(a) The skid control ECU calculates vehicle stability tendency based on the signals from the 4 wheel speed sensors, the yaw rate and deceleration sensor and the steering angle sensor. In addition, it evaluates the results of the calculations to determine whether any control actions (control of the engine output torque by electronic throttle control and of the brake fluid pressure by the hydraulic brake booster) should be implemented.

3. FAIL SAFE FUNCTION

(a) When a failure occurs in the ABS with BA, TRAC, AUTO LSD, A-TRAC and VSC systems, the ABS and VSC TRAC warning lights, and VSC OFF and SLIP indicator lights come on, and the operation of those systems is prohibited. In addition to this, when a failure which disables the EBD operation occurs, the brake warning light comes on and its operation is prohibited.

(b) If control is prohibited due to a malfunction during operation, control is disabled gradually to avoid sudden vehicle instability.

4. INITIAL CHECK

(a) When the vehicle speed first reaches approximately 4 mph (6 km/h) or more after the ignition switch is turned on, each solenoid valve and the motor of the hydraulic brake booster are sequentially activated to perform electrical checks. During the initial check, the operating sound of the motor can be heard from the engine compartment, but this does not indicate a malfunction.

5. FUNCTION OF COMPONENTS

Components	Function
Hydraulic brake booster	• Consists of master cylinder solenoid, pump motor and accumulator reservoir, and adjusts brake fluid pressure applied to each wheel cylinder. • Houses skid control ECU.
Skid control ECU	• Processes signals from each sensor to control ABS, BA, TRC, VSC, A-TRAC and AUTO LSD. • Sends and receives control signals to and from ECM, yaw rate and deceleration sensor, steering angle sensor, etc. via CAN communication. • Housed in hydraulic brake booster.
Master cylinder pressure sensor	• Detects brake fluid pressure in master cylinder. • Housed in hydraulic brake booster.
Accumulator pressure sensor	• Detects accumulator pressure in accumulator. • Housed in hydraulic brake booster.
Front speed sensor	• Detects wheel speed and sends signal to skid control ECU. • Front speed sensor (semiconductor speed sensor) with integrated bearing and sensor rotor (magnetic sensor rotor) are installed on front axle hub. • Magnetic sensor rotor is equipped with north and south poles (48 poles each), which are evenly spaced around its circumference. • Magnetic field changes as magnetic sensor rotor rotates. Semiconductor speed sensor detects change and outputs it as vehicle speed pulse.
Rear speed sensor	• Rear speed sensor (semiconductor speed sensor) and sensor rotor (magnetic sensor rotor) are installed on rear axle carrier. • Rear speed sensor has same structure and functions as front speed sensor.
ABS warning light	Illuminates to inform driver that skid control ECU has detected ABS system malfunction and terminated ABS system operation.
BRAKE warning light	Illuminates to inform driver that skid control ECU has detected BRAKE system malfunction.
VSC TRAC warning light	Illuminates to inform driver that skid control ECU has detected VSC system malfunction and terminated VSC system operation.
SLIP indicator light	Blinks to inform driver that VSC, TRAC, A-TRAC or AUTO LSD is in operation.
A-TRAC indicator light	Illuminates to inform driver that A-TRAC is ready to operate.
AUTO LSD indicator light	Illuminates to inform driver that AUTO LSD is ready to operate.
Yaw rate and deceleration sensor	Detects vehicle's yaw rate and deceleration and sends signal to skid control ECU via CAN communication system.
Steering angle sensor	Detects steering wheel's steering angle and amount of movement, then sends signal to skid control ECU via CAN communication system.
Skid control buzzer	• Sounds intermittently to inform driver that VSC activating. • Sounds intermittently to inform driver if temperature of hydraulic brake booster has increased excessively due to continuous operation of TRAC, A-TRAC and AUTO LSD. • Sounds continuously to alert driver that hydraulic pressure of accumulator in hydraulic brake booster has decreased.
ECM	• Sends sensor signals (throttle opening angle, engine rpm) to skid control ECU. • Engine controlled based on traction control signal from skid control ECU via CAN communication system.
A-TRAC switch	Allows driver to turn A-TRAC on and off.
AUTO LSD switch	Allows driver to turn AUTO LSD on and off.

HOW TO PROCEED WITH TROUBLESHOOTING

The intelligent tester can be used in steps 3, 5 and 6.

1 VEHICLE BROUGHT TO WORKSHOP

NEXT

2 CUSTOMER PROBLEM ANALYSIS

NEXT

3 DTCS AND FREEZE FRAME DATA CHECK AND CLEARANCE

NEXT

4 PROBLEM SYMPTOM CONFIRMATION

Result

Result	Proceed to
Symptom does not occur	A
Symptom occurs	B

B → SYMPTOM SIMULATION

A

5 CHECK CAN COMMUNICATION SYSTEM

(a) Check for the output DTCs relating to the CAN communication system.
HINT:
The ECU of this system is connected to the CAN communication system. Therefore, before starting troubleshooting, be sure to check that there is no trouble in the CAN communication system.

Result

Result	Proceed to
CAN communication system DTC not output	A
CAN communication system DTC output	B

B → CAN COMMUNICATION SYSTEM

A

6	DTC CHECK

HINT:
See page BC-45.

BC

Result

Result	Proceed to
DTC output	A
DTC not output	B

B → PROBLEM SYMPTOMS TABLE

A

7	DTC CHART

HINT:
See page BC-53.

NEXT

8	CIRCUIT INSPECTION

HINT:
When 2 or more DTCs are detected, perform circuit inspections one by one until the problem is identified.

NEXT

9	PROBLEM IDENTIFICATION

NEXT

10	REPAIR OR REPLACEMENT

NEXT

11	CONFIRMATION TEST

NEXT

END

CHECK FOR INTERMITTENT PROBLEMS

1. DESCRIPTION

HINT:

A momentary interruption (open circuit) in the connectors and/or wire harness between the sensors and ECUs can be detected through the ECU data monitor function of the intelligent tester.

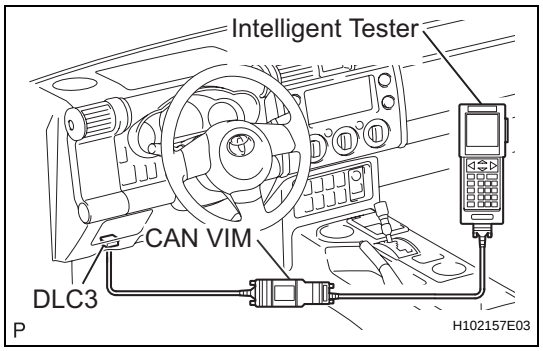

(a) Turn the ignition switch off and connect the intelligent tester to the DLC3.

(b) Turn the ignition switch on. Follow the on-screen directions on the intelligent tester to display the DATA LIST and select areas which should be monitored for momentary interruptions.

HINT:

A momentary interruption (open circuit) cannot be detected for 3 seconds after the ignition switch is turned on (initial check).

Item	Measurement Item / Range (Display)	Normal Condition	Diagnostic Note
SPD SEN FR	FR speed sensor open detection / OPN_DET or NORMAL	OPN_DET : Momentary interruption NORMAL : Normal	-
SPD SEN FL	FL speed sensor open detection / OPN_DET or NORMAL	OPN_DET : Momentary interruption NORMAL : Normal	-
SPD SEN RR	RR speed sensor open detection / OPN_DET or NORMAL	OPN_DET : Momentary interruption NORMAL : Normal	-
SPD SEN RL	RL speed sensor open detection / OPN_DET or NORMAL	OPN_DET : Momentary interruption NORMAL : Normal	-
EFI COM	EFI communication open detection / OPN_DET or NORMAL	OPN_DET : Momentary interruption NORMAL : Normal	-
YAWRATE SEN	Yaw rate sensor open detection / OPN_DET or NORMAL	OPN_DET : Momentary interruption NORMAL : Normal	-
DECELE SEN	Deceleration sensor open detection / OPN_DET or NORMAL	OPN_DET : Momentary interruption NORMAL : Normal	-
STEERING SEN	Steering angle sensor open detection / OPN_DET or NORMAL	OPN_DET : Momentary interruption NORMAL : Normal	-
ACC SEN	Accumulator pressure sensor open detection / OPN_DET or NORMAL	OPN_DET : Momentary interruption NORMAL : Normal	-

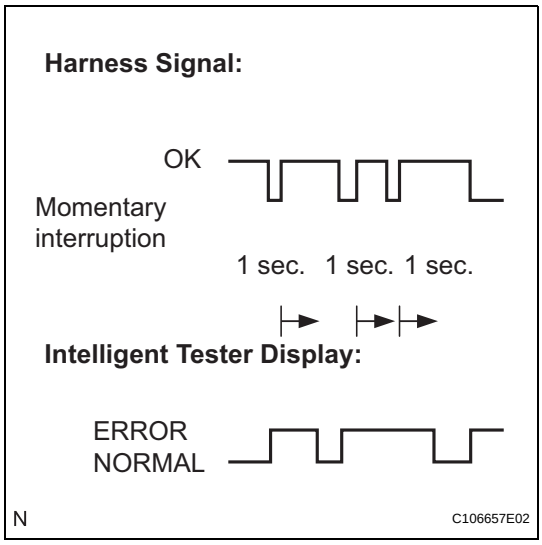

HINT:

- If the intelligent tester status remains open, check the continuity between the ECU and the sensors, or between ECUs.
- The OPEN display on the intelligent tester remains on for 1 second after the harness signal changes from momentary interruption (open circuit) to normal condition.

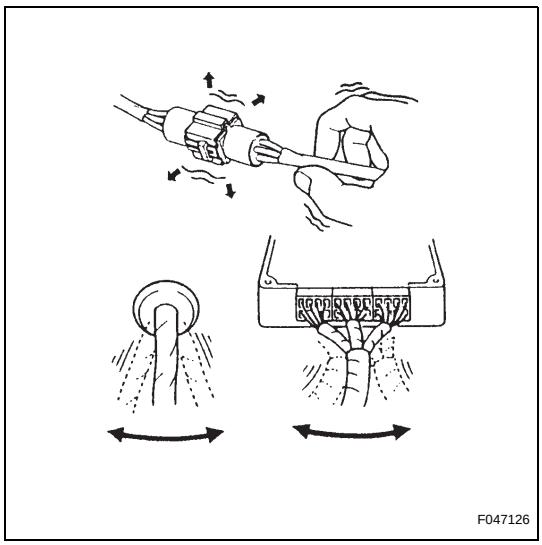

(c) While observing the screen, gently jiggle the connector or wire harness between the ECU and sensors, or between ECUs.

OK:

OPEN-screen display does not change.

CALIBRATION

1. DESCRIPTION

(a) After replacing the VSC relevant components or performing "Front wheel alignment adjustment", clearing and reading the sensor calibration data are necessary.

(b) Follow the chart to perform calibration.

Replacing Parts	Necessary Operations
Skid Control ECU	Yaw rate sensor and deceleration sensor zero point calibration.
Yaw Rate Sensor	1. Clearing zero point calibration data. 2. Yaw rate sensor and deceleration sensor zero point calibration.
Front Wheel Alignment	1. Clearing zero point calibration data. 2. Yaw rate sensor and deceleration sensor zero point calibration.

2. CLEAR ZERO POINT CALIBRATION (for Using a Intelligent Tester)

HINT:

After replacing the yaw rate and deceleration sensor or adjusting the front wheel alignment, be sure to clear the zero point calibration data in the skid control ECU and perform zero point calibration.

(a) Connect the intelligent tester to the DLC3.

(b) Turn the ignition switch on.

(c) Operate the intelligent tester to erase the DTCs.

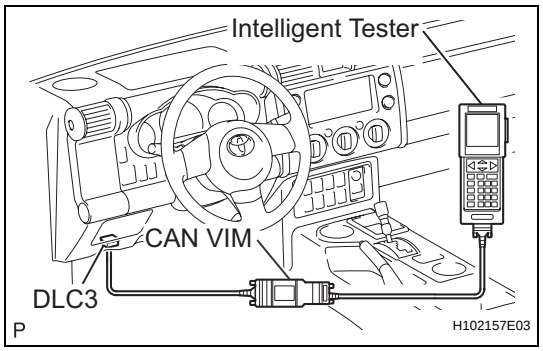

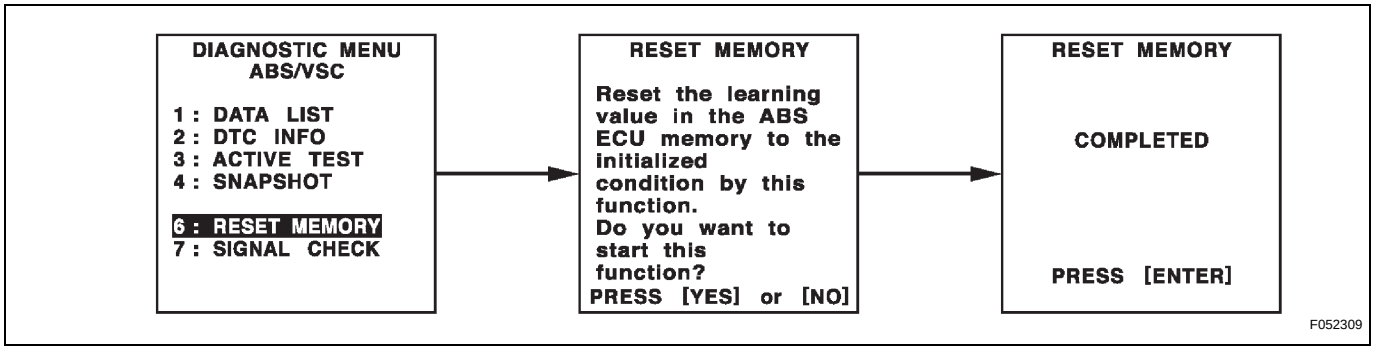

3. PERFORM ZERO POINT CALIBRATION OF YAW RATE SENSOR AND DECELERATION SENSOR (for Using a Intelligent Tester)

HINT:

After replacing the skid control ECU and/or yaw rate and deceleration sensor, or adjusting the front wheel alignment, be sure to perform yaw rate sensor and deceleration sensor zero point calibration.

BC

NOTICE:

- **While obtaining the zero point, do not vibrate the vehicle by tilting, moving or shaking it and keep it stationary. (Do not start the engine.)**
- **Be sure to do this on a level surface (with an inclination of less than 1 degree).**

(a) Procedures for test mode.

(1) Turn the ignition switch off.

(2) Check that the steering wheel is in the straight-ahead position.

(3) A/T: Check that the shift lever is in the P position and apply the parking brake.
M/T: Check that the shift lever is in neutral and apply the parking brake.
NOTICE:
DTC C1210/36 and C1336/39 will be recorded if the shift lever is not in the P position.

(4) Connect the intelligent tester to the DLC3.

(5) Turn the ignition switch on.

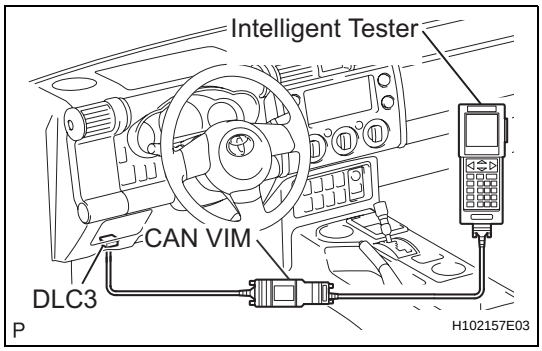

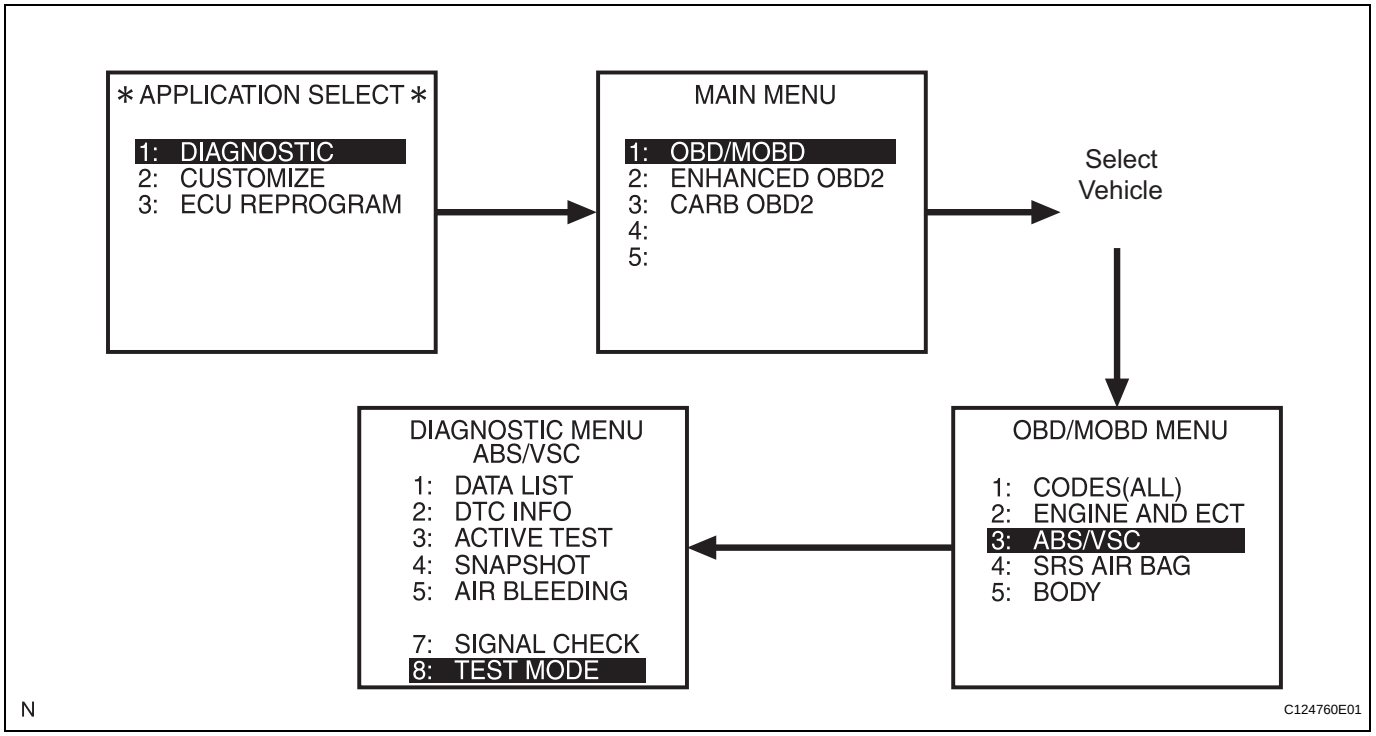

Switch the ECU to test mode using the intelligent tester.
Select the following menu items: DIAGNOSTIC / OBD/MOBD / select vehicle / ABS/VSC / TEST MODE.

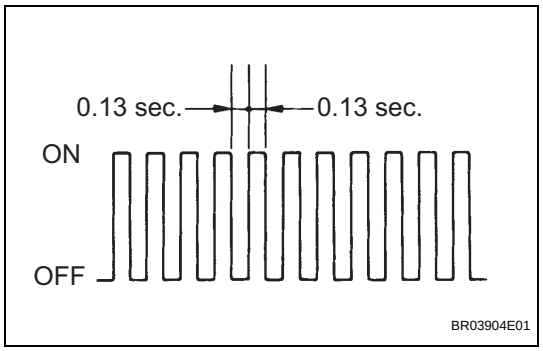

(7) Keep the vehicle stationary on a level surface for 2 seconds or more.

(8) Check that the VSC TRAC warning light blinks as shown in the illustration.
NOTICE:
The VSC TRAC warning light (and VSC OFF indicator light (4WD or 2WD with rear differential lock)) stay ON when obtaining the zero point.
HINT:
- If the VSC TRAC warning light does not blink, perform the zero point calibration again.
- The zero point calibration is performed only once after the system enters test mode.
- Calibration cannot be performed again until the stored data is cleared once.

4. CLEAR ZERO POINT CALIBRATION (for Using a SST Check Wire)

HINT:
After replacing the yaw rate and deceleration sensor or adjusting the front wheel alignment, be sure to clear the zero point calibration data in the skid control ECU and perform zero point calibration.

(a) Turn the ignition switch on.

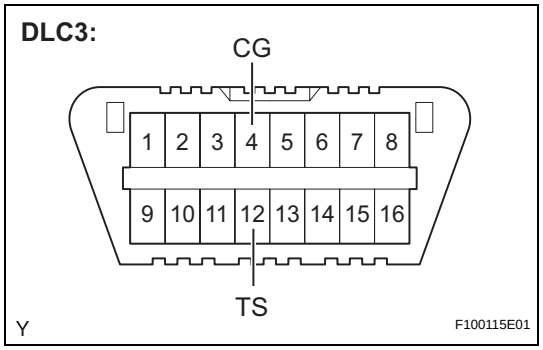

(b) Using SST, connect and disconnect terminals TS and CG of the DLC3 4 times or more within 8 seconds.
SST 09843-18040

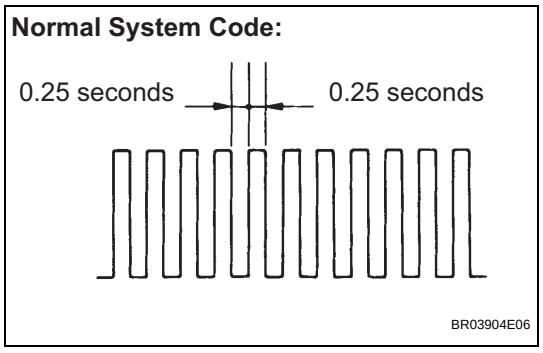

(c) Check that the warning light blinks in a normal system indication pattern.

5. PERFORM ZERO POINT CALIBRATION OF YAW RATE SENSOR AND DECELERATION SENSOR (for Using a SST Check Wire)

HINT:
After replacing the skid control ECU and/or yaw rate and deceleration sensor, or adjusting the front wheel alignment, be sure to perform yaw rate sensor and deceleration sensor zero point calibration.
NOTICE:
- **While obtaining the zero point, do not vibrate the vehicle by tilting, moving or shaking it and keep it stationary. (Do not start the engine.)**
- **Be sure to do this on a level surface (with an inclination of less than 1 degree).**

(a) Procedures for test mode:
(1) Turn the ignition switch off.

BC

(2) Check that the steering wheel is in the straight-ahead position.
(3) A/T: Check that the shift lever is in the P position and apply the parking brake.
M/T: Check that the shift lever is in neutral and apply the parking brake.
NOTICE:
DTC C1210/36 and C1336/39 will be recorded if the shift lever is not in the P position.

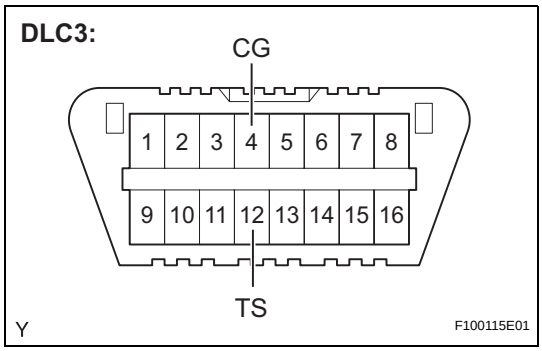

(4) Using SST, connect terminals TS and CG of the DLC3.
SST 09843-18040
(5) Turn the ignition switch on.
(6) Keep the vehicle stationary on a level surface for 2 seconds or more.

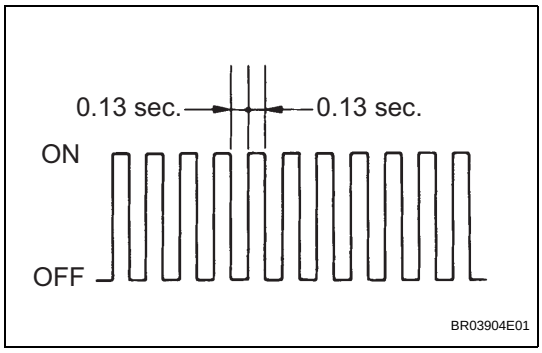

(7) Check that the VSC TRAC warning light blinks as shown in the illustration.
NOTICE:
The VSC TRAC warning light (and VSC OFF indicator light (4WD or 2WD with rear differential lock)) stay ON when obtaining the zero point.
HINT:
- If the VSC TRAC warning light does not blink, perform the zero point calibration again.
- The zero point calibration is performed only once after the system enters test mode.
- Calibration cannot be performed again until the stored data is cleared once.

TEST MODE PROCEDURE

1. TEST MODE PROCEDURE (for Using a Intelligent Tester)

HINT:

- After replacing the yaw rate and deceleration sensor, be sure to clear the zero point calibration data in the skid control ECU and perform zero point calibration.
- If the ignition switch is turned from the ON to the ACC or LOCK position during test mode, DTCs related to the signal check function will be erased.
- During test mode, the skid control ECU records all DTCs related to the signal check function. By performing the signal check, the codes are erased if normality is confirmed. The codes left over are the codes where an abnormality was found.

(a) Turn the ignition switch off.

(b) Check that the steering wheel is in the straight-ahead position.

(c) A/T: Check that the shift lever is in the P position and apply the parking brake.
M/T: Check that the shift lever is in neutral and apply the parking brake.

(d) Connect the intelligent tester to the DLC3.

(e) Start the engine.

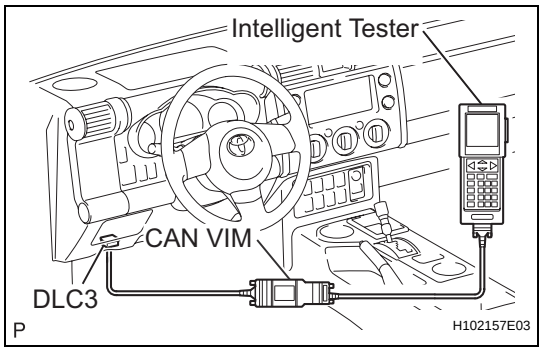

(f) Switch the ECU to test mode using the intelligent tester. Select the following menu items: DIAGNOSIS / OBD/MOBD /select vehicle / ABS/ VSC / SIGNAL CHECK.

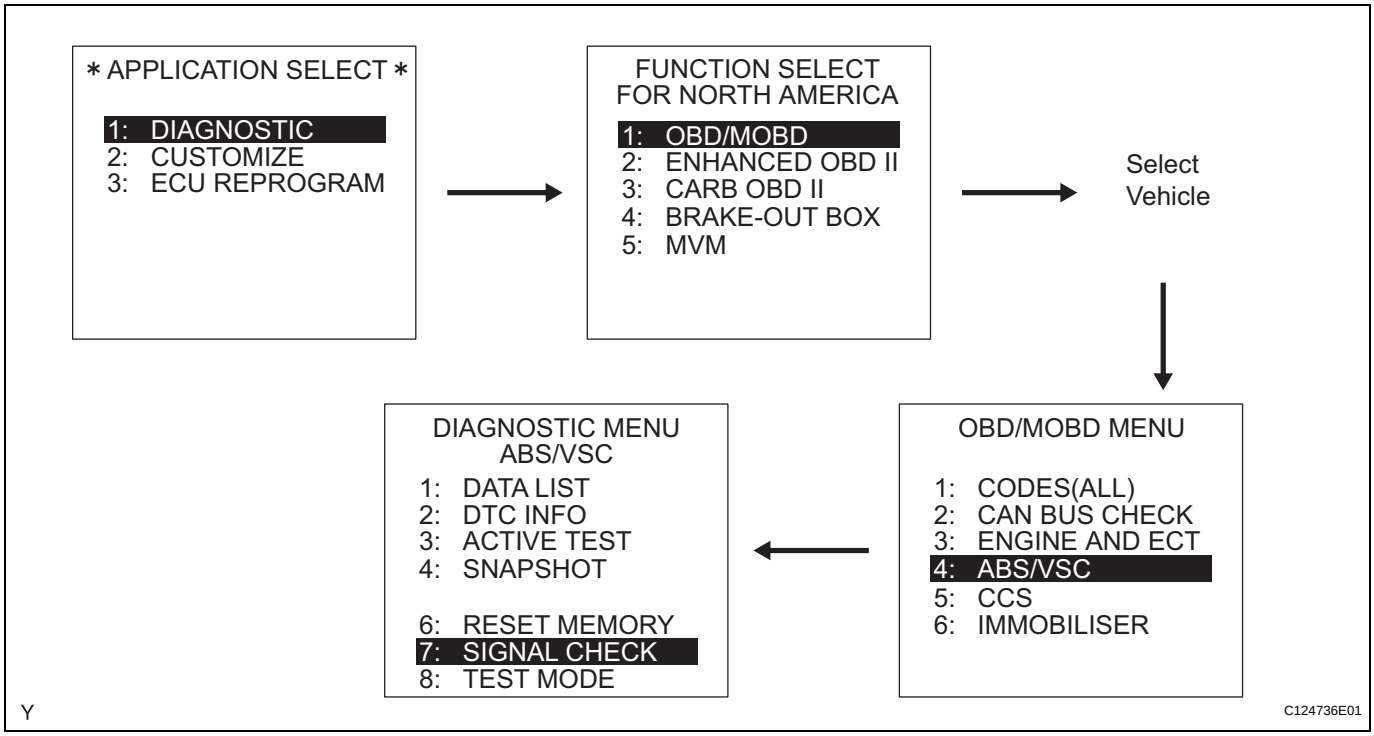

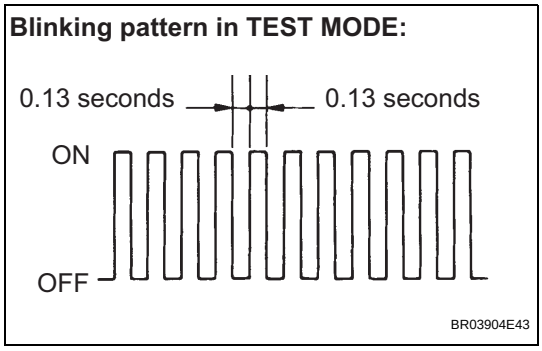

(g) Check that the ABS and VSC TRAC warning lights blink as shown in the illustration.
HINT:
If the ABS warning light and VSC TRAC warning light do not blink, inspect the ABS warning light circuit and VSC TRAC warning light circuit.

Trouble area	See page
ABS warning light circuit	BC-151 BC-154
VSC TRAC warning light circuit	BC-156 BC-159

(h) Activate the ABS sensors (deceleration sensor, master cylinder pressure sensor, 4WD detection switch, L4 detection switch and speed sensor) and VSC sensor (yaw rate and deceleration sensor) in test mode (SIGNAL CHECK) using a intelligent tester.

2. TEST MODE PROCEDURE (for Using a SST Check Wire)

HINT:

- After replacing the yaw rate and deceleration sensor, be sure to clear the zero point calibration data in the skid control ECU and perform zero point calibration.

- If the ignition switch is turned from the ON to the ACC or LOCK position during test mode, DTCs relating to the signal check function will be erased.
- During test mode, the skid control ECU records all DTCs relating to the signal check function. By performing the signal check, the codes are erased if normality is confirmed. The remaining codes are those indicating where an abnormality was found.

(a) Turn the ignition switch off.

(b) Check that the steering wheel is in the straight-ahead position.

(c) A/T: Check that the shift lever is in the P position and apply the parking brake.
M/T: Check that the shift lever is in neutral and apply the parking brake.

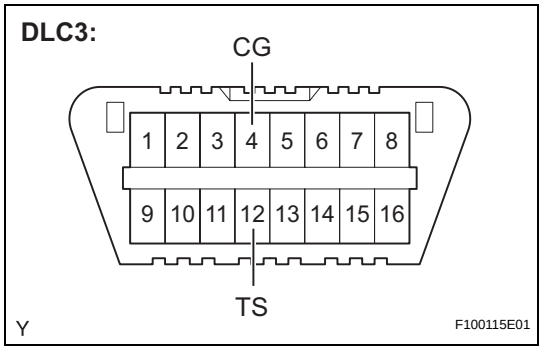

(d) Using SST, connect terminals TS and CG of the DLC3.
SST 09843-18040

(e) Start the engine.

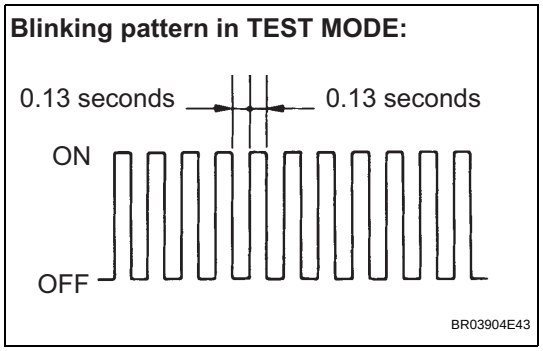

(f) Check that the ABS and VSC TRAC warning lights blink as shown in the illustration.
HINT:
If the ABS warning light and VSC TRAC warning light do not blink, inspect the TS and CG terminal circuit, the ABS warning light circuit and VSC TRAC warning light circuit.

Trouble area	See page
ABS warning light circuit	BC-151 BC-154
VSC TRAC warning light circuit	BC-156 BC-159
TS and CG terminal circuit	BC-193

(g) Activate the ABS sensors (deceleration sensor, master cylinder pressure sensor, 4WD detection switch, L4 detection switch and speed sensor) and VSC sensor (yaw rate and deceleration sensor) in test mode (SIGNAL CHECK) using a check wire.

3. DECELERATION SENSOR SIGNAL CHECK

(a) Keep the vehicle stationary on a level surface for 1 second or more.
HINT:
The ABS warning light continues blinking at this time.

4. MASTER CYLINDER PRESSURE SENSOR CHECK

(a) Keep the vehicle stationary and release the brake pedal for 1 second or more, and quickly depress the brake pedal with a force of 98 N (10 kgf) or more for 1 second or more.

(b) Check that the ABS warning light comes on for 3 seconds.

HINT:

- While the ABS warning light stays on, continue to depress the brake pedal with a force of 98 N (10 kgf) or more.
- The ABS warning light comes on for 3 seconds every time the above brake pedal operation is performed.

5. 4WD DETECTION SWITCH SIGNAL CHECK (for 4WD models)

(a) M/T:

(1) Move the transfer high and low shift lever to HL or HH to lock the center differential.

(2) Move the transfer high and low shift lever to H to unlock the center differential.

(b) A/T:

(1) Move the transfer high and low shift lever to H4 or L4 to put the vehicle in 4WD mode.

(2) Move the transfer high and low shift lever to H2 to put the vehicle in 2WD mode.

6. L4 DETECTION SWITCH SIGNAL CHECK (for 4WD models of A/T)

(a) Move the transfer high and low shift lever to the L4 position.

(b) Move the transfer high and low shift lever to H2 or H4.

HINT:

Move the vehicle either a little forward or a little backward to engage the L4 position.

7. SPEED SENSOR CHECK

(a) Drive the vehicle straight rearward at a speed of 1.9 mph (3 km/h) or more for 1 second or more.

NOTICE:

At this time, if the vehicle speed exceeds 28 mph (45 km/h), a signal check code will be stored again. Decelerate or stop the vehicle before the speed reaches 28 mph (45 km/h).

(b) Drive the vehicle straight forward at a speed of 56 mph (90 km/h) or more.

(c) Check that the ABS warning light goes off.

NOTICE:

- **Before performing the speed sensor signal check, complete the deceleration sensor, master cylinder pressure sensor, 4WD detection switch and L4 detection switch signal checks.**

- **The speed sensor signal check may not be completed if the speed sensor signal check is started while turning the steering wheel or spinning the wheels.**
- **After the ABS warning light goes off, if the vehicle speed exceeds 28 mph (45 km/h), a signal check code will be stored again. Decelerate or stop the vehicle before the speed reaches 28 mph (45 km/h).**
- **If the signal check has not been completed, the ABS warning light blinks while driving and the ABS system does not operate.**

Blinking pattern in speed sensor check:

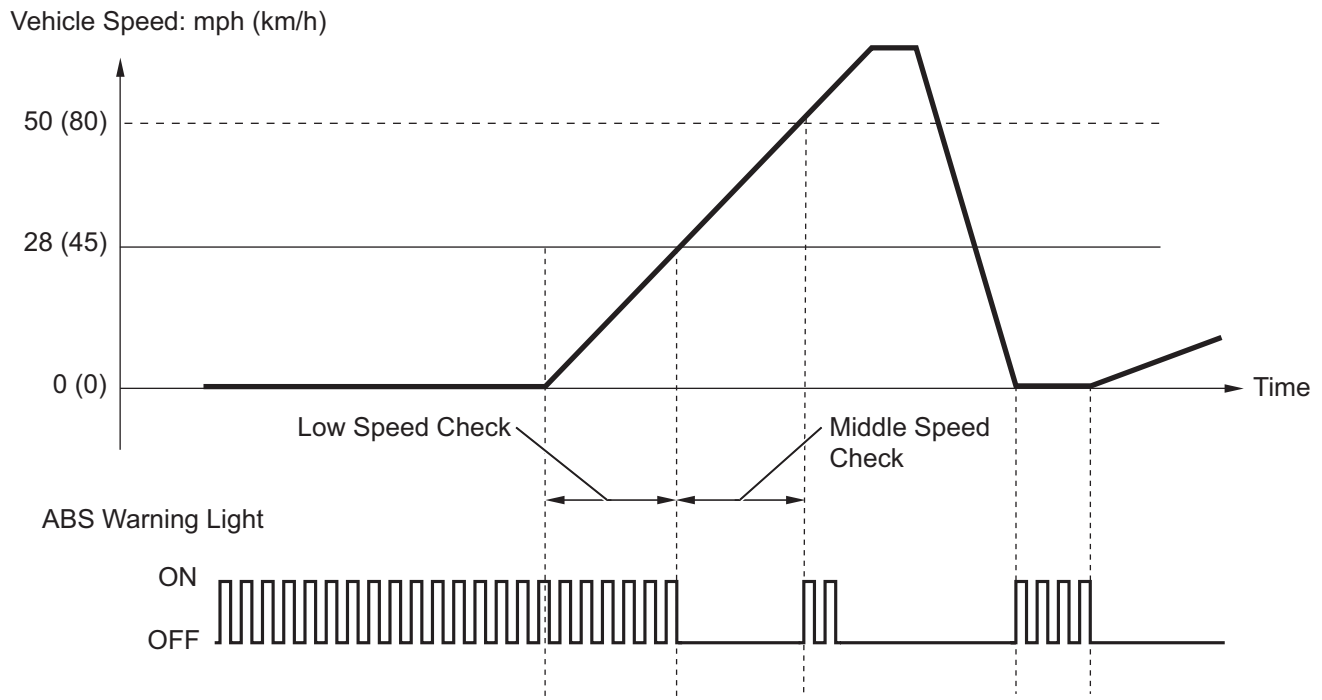

(d) Stop the vehicle.
HINT:
When the signal check has been completed, the ABS warning light goes off while driving and blinks in test mode while stationary.

8. READ DTC OF ABS SENSOR (for Using a Intelligent Tester)

(a) Read the DTC(s) by following the tester screen.
HINT:
Refer to the intelligent tester operator's manual for further details.

BC

Normal System Code:

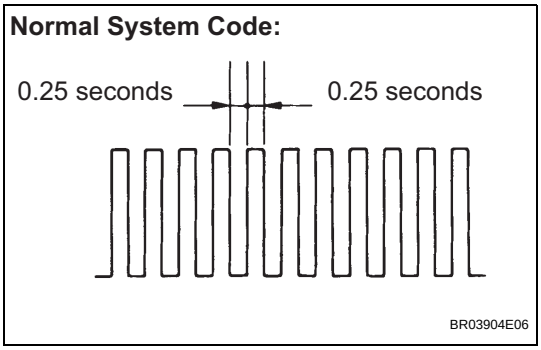

9. **READ DTC OF ABS SENSOR (for Using a SST Check Wire)**
   (a) Using SST, connect terminals TC and CG of the DLC3.
   SST 09843-18040
   (b) Turn the ignition switch on.
   (c) Read the number of blinks of the ABS warning light.
   - If every sensor is normal, the normal code is displayed (A cycle of 0.25 seconds ON and 0.25 seconds OFF is repeated).
   - If 2 or more malfunctions are detected at the same time, the lowest numbered DTC is displayed first.

Example: Indication of DTCs 72 and 76

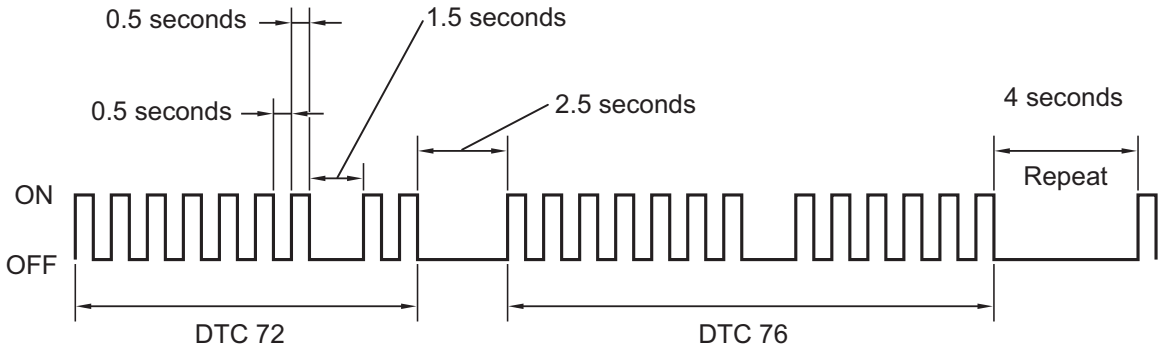

   (d) After the check, disconnect the SST from terminals TC and CG of the DLC3.
   (e) Turn the ignition switch off.

10. **AUTO LSD SWITCH CHECK (for vehicles with AUTO LSD)**
   (a) Press the AUTO LSD switch.
   (b) Check that the AUTO LSD indicator light comes on.
   (c) Press the AUTO LSD switch again to turn the AUTO LSD indicator off.

11. **A-TRAC SWITCH CHECK (for vehicles with A-TRAC)**
   (a) Press the A-TRAC switch.
   (b) Check that the A-TRAC indicator light comes on.
   (c) Press the A-TRAC switch again to turn the A-TRAC indicator off.

12. **YAW RATE SENSOR CHECK**
   (a) Keep the vehicle stationary on a level surface for 1 second or more.

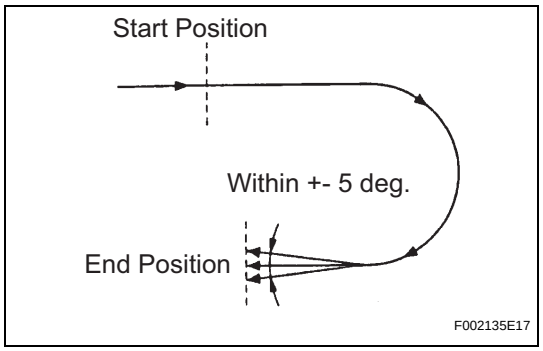

(b) Shift the shift lever to the D position (A/T) and drive the vehicle at a speed of approximately 3 mph (5 km/h), turn the steering wheel either to the left or right 90°or more, and turn the vehicle through 180 degrees.

(c) A/T: Stop the vehicle, check that the shift lever is in the P position, and then apply the parking brake.
M/T: Stop the vehicle, check that the shift lever is in neutral, and then apply the parking brake.

(d) Check that the skid control (VSC warning) buzzer sounds for 3 seconds.
HINT:
- If the skid control (VSC warning) buzzer sounds, the signal check has been completed normally.
- If the skid control (VSC warning) buzzer does not sound, check the skid control buzzer circuit (See page BC-187), then perform the signal check again.
- If the skid control (VSC warning) buzzer still doesn't sound, there is a malfunction in the yaw rate sensor, so check the DTC.
- Drive the vehicle in a 180° semi circle. At the end of the turn, the direction of the vehicle should be within 180+-5° of its start position.
- The vehicle turn should be completed within 20 seconds.
- Do not spin the wheels.

13. READ DTC OF VSC SENSOR (for Using a Intelligent Tester)

(a) Read the DTC(s) by following the tester screen.
- Refer to the intelligent tester operator's manual for further details.

14. READ DTC OF VSC SENSOR (for Using a SST Check Wire)

(a) Using SST, connect terminals TC and CG of the DLC3.
SST 09843-18040

(b) Turn the ignition switch on.

(c) Read the number of blinks of the VSC TRAC warning light.
- If every sensor is normal, the normal code is displayed (A cycle of 0.25 seconds ON and 0.25 seconds OFF is repeated).

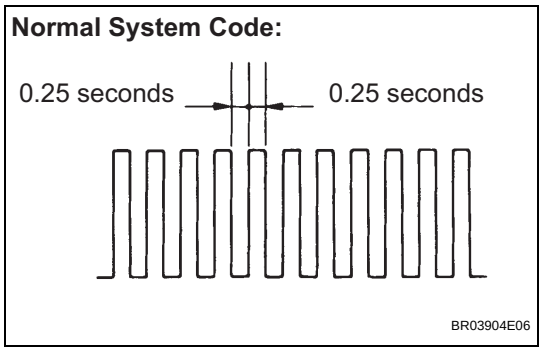

- If 2 or more malfunctions are detected at the same time, the lowest numbered DTC is displayed first.

Example: Indication of DTCs 72 and 76

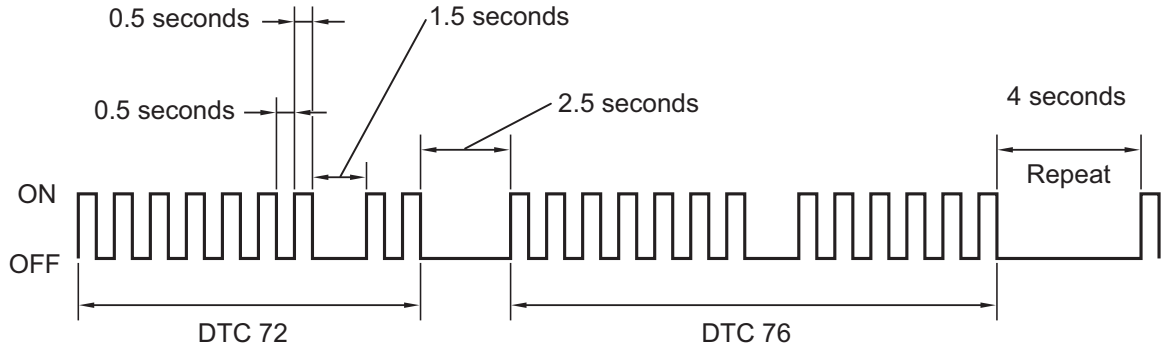

(d) After the check, disconnect the SST from terminals TC and CG of the DLC3.
(e) Turn the ignition switch off.

15. DTC OF SIGNAL CHECK FUNCTION

ABS sensor

DTC No.	Diagnosis	Trouble Areas
C1271/71	Low output voltage of right front speed sensor	• Front speed sensor RH • Front speed sensor RH circuit • Sensor installation • Skid control sensor wire • Master cylinder solenoid (skid control ECU)
C1272/72	Low output voltage of left front speed sensor	• Front speed sensor LH • Front speed sensor LH circuit • Sensor installation • Skid control sensor wire • Master cylinder solenoid (skid control ECU)
C1273/73	Low output voltage of right rear speed sensor	• Rear speed sensor RH • Rear speed sensor RH circuit • Sensor installation • Skid control sensor wire • Master cylinder solenoid (skid control ECU)
C1274/74	Low output voltage of left rear speed sensor	• Rear speed sensor LH • Rear speed sensor LH circuit • Sensor installation • Skid control sensor wire • Master cylinder solenoid (skid control ECU)
C1275/75	Abnormal change in output voltage of right front speed sensor	• Front speed sensor RH • Front speed sensor RH circuit • Master cylinder solenoid (skid control ECU)
C1276/76	Abnormal change in output voltage of left front speed sensor	• Front speed sensor LH • Front speed sensor LH circuit • Master cylinder solenoid (skid control ECU)
C1277/77	Abnormal change in output voltage of right rear speed sensor	• Rear speed sensor RH • Rear speed sensor RH circuit • Master cylinder solenoid (skid control ECU)
C1278/78	Abnormal change in output voltage of left rear speed sensor	• Rear speed sensor LH • Rear speed sensor LH circuit • Master cylinder solenoid (skid control ECU)
C1279/79	Deceleration sensor faulty	• Yaw rate and deceleration sensor • Yaw rate and deceleration sensor circuit

DTC No.	Diagnosis	Trouble Areas
C1281/81	Master cylinder pressure sensor output malfunction	• Hydraulic brake booster (master cylinder pressure sensor) • Master cylinder solenoid (skid control ECU) • Stop light switch circuit
C1282/82 (*1)	Center differential lock position switch malfunction	• Transfer indicator switch (4WD position) (A/T) • Transfer indicator switch (4WD position) circuit (A/T) • Transfer indicator switch (center differential lock position) (M/T) • Transfer indicator switch (center differential lock position) circuit (M/T)
C1283/83 (*2)	L4 detection switch malfunction	• Transfer indicator switch (L4 position) • Transfer indicator switch (L4 position) circuit

HINT:

- *1: 4WD only
- *2: 4WD + A/T

VSC sensor

DTC No.	Diagnosis	Trouble Areas
C0371/71	Yaw rate sensor output signal malfunction	Yaw rate and deceleration sensor

HINT:

The codes in this table are output only in test mode (signal check).

BC

PROBLEM SYMPTOMS TABLE

If a normal code is displayed during the DTC check but the problem still occurs, check the circuits for each problem symptom in the order given in the table below and proceed to the relevant troubleshooting page.

NOTICE:

When replacing the skid control ECU, sensor or etc., turn the ignition switch off.

VEHICLE STABILITY CONTROL SYSTEM

Symptom	Suspected area	See page
ABS, BA and/or EBD does not operate	1. Check for DTCs again and make sure that normal system code displayed.	BC-45
	2. IG1 power source circuit	BC-97
	3. IG2 power source circuit	BC-101
	4. Front speed sensor circuit	BC-59
	5. Rear speed sensor circuit	BC-67
	6. Check hydraulic brake booster using intelligent tester (Check hydraulic brake booster operation using active test function) If abnormal, check hydraulic circuit for leakage.	BR-19
	7. If symptoms still occur even after above circuits in suspected areas inspected and proved to be normal, replace master cylinder solenoid.	BR-33
ABS, BA and/or EBD does not operate efficiently	1. Check for DTCs again and make sure that normal system code displayed.	BC-45
	2. Front speed sensor circuit	BC-59
	3. Rear speed sensor circuit	BC-67
	4. Stop light switch circuit	BC-111
	5. Check hydraulic brake booster using intelligent tester (Check hydraulic brake booster operation using active test function) If abnormal, check hydraulic circuit for leakage.	BR-19
	6. If symptoms still occur even after above circuits in suspected areas inspected and proved to be normal, replace master cylinder solenoid.	BR-33
VSC and/or TRC does not operate	1. Check for DTCs again and make sure that normal system code displayed.	BC-45
	2. IG1 power source circuit	BC-97
	3. IG2 power source circuit	BC-101
	4. Front speed sensor circuit	BC-59
	5. Rear speed sensor circuit	BC-67
	6. Yaw rate and deceleration sensor circuit	BC-79
	7. Steering angle sensor circuit	BC-93
	8. Check hydraulic brake booster using intelligent tester (Check hydraulic brake booster operation using active test function) If abnormal, check hydraulic circuit for leakage.	BR-19
	9. If symptoms still occur even after above circuits in suspected areas inspected and proved to be normal, replace master cylinder solenoid.	BR-33
AUTO LSD does not operate	1. Check for DTCs again and make sure that normal system code displayed.	BC-45
	2. Check hydraulic brake booster using intelligent tester (Check hydraulic brake booster operation using active test function) If abnormal, check hydraulic circuit for leakage.	BR-19
	3. If symptoms still occur even after above circuits in suspected areas inspected and proved to be normal, replace master cylinder solenoid.	BR-33

Symptom	Suspected area	See page
A-TRAC does not operate	1. Check for DTCs again and make sure that normal system code displayed.	BC-45
	2. Check hydraulic brake booster using intelligent tester (Check hydraulic brake booster operation using active test function) If abnormal, check hydraulic circuit for leakage.	BR-19
	3. If symptoms still occur even after above circuits in suspected areas inspected and proved to be normal, replace master cylinder solenoid.	BR-33
DTC check cannot be performed	1. Check for DTCs again and make sure that normal system code displayed.	BC-45
	2. TC and CG terminal circuit	BC-190
	3. If symptoms still occur even after above circuits in suspected areas inspected and proved to be normal, replace master cylinder solenoid.	BR-33
Sensor signal check cannot be performed	1. TS and CG terminal circuit	BC-193
	2. If symptoms still occur even after above circuits in suspected areas inspected and proved to be normal, replace master cylinder solenoid.	BR-33
ABS warning light remains on	1. ABS warning light circuit	BC-151
	2. Master cylinder solenoid	BR-33
ABS warning light does not come on	1. ABS warning light circuit	BC-154
	2. Master cylinder solenoid	BR-33
VSC TRAC warning light remains on	1. VSC TRAC warning light circuit	BC-156
	2. Master cylinder solenoid	BR-33
VSC TRAC warning light does not come on	1. VSC TRAC warning light circuit	BC-159
	2. Master cylinder solenoid	BR-33
BRAKE warning light remains on	1. BRAKE warning light circuit	BC-161
	2. Master cylinder solenoid	BR-33
BRAKE warning light does not come on	1. BRAKE warning light circuit	BC-166
	2. Master cylinder solenoid	BR-33
VSC OFF indicator light remains on	1. VSC OFF indicator light circuit	BC-168
	2. Master cylinder solenoid	BR-33
VSC OFF indicator light does not come on	1. VSC OFF indicator light circuit	BC-171
	2. Master cylinder solenoid	BR-33
SLIP indicator light remains on	1. SLIP indicator light circuit	BC-173
	2. Master cylinder solenoid	BR-33
SLIP indicator light does not come on	1. SLIP indicator light circuit	BC-175
	2. Master cylinder solenoid	BR-33
AUTO LSD indicator light remains on	1. AUTO LSD indicator light circuit	BC-177
	2. Master cylinder solenoid	BR-33
AUTO LSD indicator light does not come on	1. AUTO LSD indicator light circuit	BC-180
	2. Master cylinder solenoid	BR-33
A-TRAC indicator light remains on	1. A-TRAC indicator light circuit	BC-182
	2. Master cylinder solenoid	BR-33
A-TRAC indicator light does not come on	1. A-TRAC indicator light circuit	BC-185
	2. Master cylinder solenoid	BR-33
Skid control buzzer abnormal	1. Skid control buzzer circuit	BC-187
	2. Master cylinder solenoid	BR-33

TERMINALS OF ECU

1. TERMINALS OF ECU

Skid control ECU:

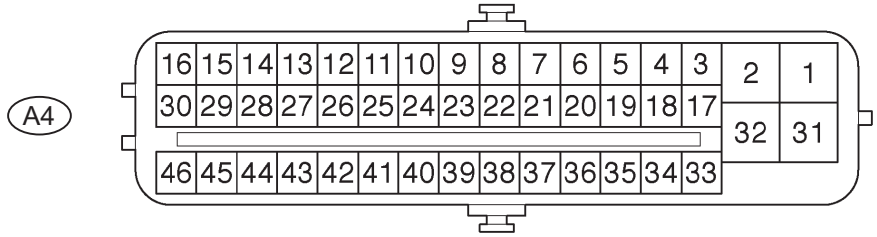

N

C110610E06

Symbols (Terminal No.)	Terminal Description
GND1 (1)	Skid control ECU ground
+BM1 (2)	Power supply for motor
FR+ (3)	Front right wheel speed sensor power supply output
FL- (4)	Front left wheel speed signal input
RR+ (5)	Rear right wheel speed sensor power supply output
RL- (6)	Rear left wheel speed signal input
STP (7)	Stop light switch input
NEO (10) (*1)	2WD/4WD change over switch input
CANH (11)	CAN communication line H
SP1 (12) (*2)	Speed signal output for combination meter
D/G (13)	Diagnosis tester communication line
P (14) (*2)	Shift position indicator P signal input
INFR (15) (*3)	AUTO LSD indicator light output
STPO (16)	Stop light operated relay output
FR- (17)	Front right wheel speed sensor input
FL+ (18)	Front left wheel speed sensor power supply output
RR- (19)	Rear right wheel speed sensor input
RL+ (20)	Rear left wheel speed sensor power supply output
EXI4 (21) (*4)	Transfer indicator switch (L4) input
TS (24)	Sensor test terminal (Sensor check switch) input
CANL (25)	CAN communication line L
EXI3 (26) (*5)	Rear differential lock position switch input
EXI (27) (*4)	Transfer indicator switch (A/T: 4WD position, M/T: center differential lock position) input
PKB (28)	Parking brake switch input
WA (29)	ABS warning light input
BZ (30)	Skid control buzzer output
+BS (31)	Power supply for solenoid
GND2 (32)	Skid control ECU ground
HDCW (33) (*6)	A-TRAC indicator light output
IND (34)	SLIP indicator light output
WT (35) (*7)	VSC OFF indicator light output
VSCW (36)	VSC TRAC warning light output
LBL (41)	Brake fluid level warning switch input
WFSE (42)	Write flash enable input
CSW (43) (*3)	AUTO LSD switch input

Symbols (Terminal No.)	Terminal Description
HDCS (44) (*6)	A-TRAC switch input
STP2 (45)	Stop light switch input
IG1 (46)	IG1 power supply

BC

Skid Control ECU:

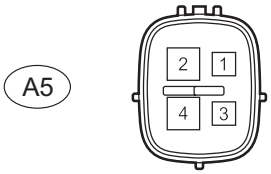

H

C124763E03

Symbols (Terminal No.)	Terminal Description
IG2 (1)	IG2 power supply
+BM2 (2)	Power supply for motor
BRL (3)	BRAKE warning light output
GND3 (4)	Skid control ECU ground

(*1): 4WD, A/T
(*2): A/T
(*3): with AUTO LSD
(*4): 4WD
(*5): with rear differential lock
(*6): with A-TRAC
(*7): 4WD or 2WD with rear differential lock

2. TERMINAL INSPECTION

Disconnect the connector and measure the voltage or resistance on the wire harness side.

HINT:

Voltage cannot be measured with the connector connected to the skid control ECU as the connector is water resistant.

Skid Control ECU (Wire Harness Side)
Connector Front View:

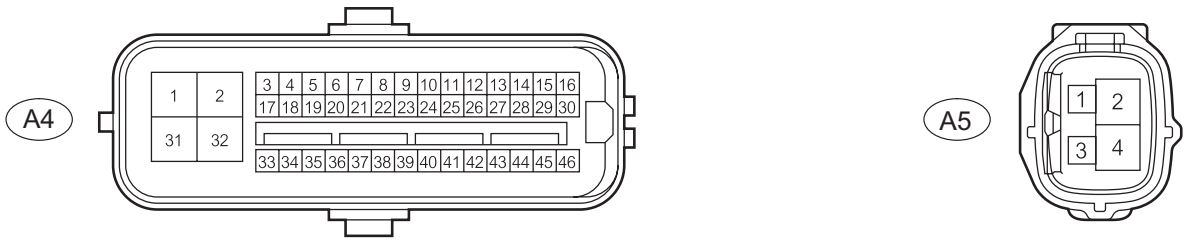

H

C124764E03

BC

Standard

Symbols (Terminal No.)	Wiring Color	Terminal Description	Condition	Specified Condition
+BM1 (A4-2) - GND1, GND2 (A4-1, 32)	L-Y - W-B	Power supply for motor from battery	Always	11 to 14 V
IG1 (A4-46) - GND1, GND2 (A4-1, 32)	B-R - W-B	IG1 power supply	IG switch OFF	Below 1 V
IG1 (A4-46) - GND1, GND2 (A4-1, 32)	B-R - W-B	IG1 power supply	IG switch ON	11 to 14 V
STP (A4-7) - GND1, GND2 (A4-1, 32)	G-B - W-B	Stop light switch input	Stop light switch OFF (Brake pedal released)	Below 1.5 V
STP (A4-7) - GND1, GND2 (A4-1, 32)	G-B - W-B	Stop light switch input	Stop light switch ON (Brake pedal released)	8 to 14 V
P (A4-14) - GND1, GND2 (A4-1, 32) (*1)	Y-B - W-B	Shift position indicator P signal input	IG switch ON, shift P position	8 to 14 V
P (A4-14) - GND1, GND2 (A4-1, 32) (*1)	Y-B - W-B	Shift position indicator P signal input	IG switch ON, any shift position except P	Below 1 V
EXI4 (A4-21) - GND1, GND2 (A4-1, 32) (*1) (*2)	W-L - W-B	Transfer indicator switch (L4) input	IG switch ON, transfer position L4	Below 1.5 V
EXI4 (A4-21) - GND1, GND2 (A4-1, 32) (*1) (*2)	W-L - W-B	Transfer indicator switch (L4) input	IG switch ON, transfer condition except L4	8 to 14 V
EXI3 (A4-26) - GND1, GND2 (A4-1, 32) (*3)	L-Y - W-B	Rear differential lock detection switch input	IG switch ON, rear differential lock switch ON	Below 1.5 V
EXI3 (A4-26) - GND1, GND2 (A4-1, 32) (*3)	L-Y - W-B	Rear differential lock detection switch input	IG switch ON, rear differential lock switch OFF	8 to 14 V
EXI (A4-27) - GND1, GND2 (A4-1, 32) (*2)	GR - W-B	Transfer indicator switch (A/T: 4WD position, M/T: center differential lock position) input	A/T: IG switch ON, transfer condition H4 or L4 M/T: IG switch ON, transfer condition HH or HL	8 to 14 V
EXI (A4-27) - GND1, GND2 (A4-1, 32) (*2)	GR - W-B	Transfer indicator switch (A/T: 4WD position, M/T: center differential lock position) input	A/T: IG switch ON, transfer condition H2 M/T: IG switch ON, transfer condition H	Below 1.5 V
PKB (A4-28) - GND1, GND2 (A4-1, 32)	W-R - W-B	Parking brake switch input	IG switch ON, parking brake switch ON	Below 1.5 V
PKB (A4-28) - GND1 , GND2 (A4-1, 32)	W-R - W-B	Parking brake switch input	IG switch ON, parking brake switch OFF	11 to 14 V
+BS (A4-31) - GND1, GND2 (A4-1, 32)	Y - W-B	Power supply for solenoid from battery	Always	11 to 14 V
LBL (A4-41) - GND1, GND2 (A4-1, 32)	V-R - W-B	Brake fluid level warning switch input	Brake fluid level min. -5mm	Below 1 Ω
LBL (A4-41) - GND1, GND2 (A4-1, 32)	V-R - W-B	Brake fluid level warning switch input	Brake fluid level max.	1.9 k to 2.1 kΩ
CSW (A4-43) - GND1, GND2 (A4-1, 32) (*4)	R-L - W-B	AUTO LSD switch input	Ignition switch ON, AUTO LSD switch ON	Below 1.5 V
CSW (A4-43) - GND1, GND2 (A4-1, 32) (*4)	R-L - W-B	AUTO LSD switch input	Ignition switch ON, AUTO LSD switch OFF	8 to 14 V
HDCS (A4-44) - GND1, GND2 (A4-1, 32) (*5)	P-G - W-B	A-TRAC switch input	Ignition switch ON, A-TRAC switch ON	Below 1.5 V
HDCS (A4-44) - GND1, GND2 (A4-1, 32) (*5)	P-G - W-B	A-TRAC switch input	Ignition switch ON, A-TRAC switch OFF	8 to 14 V
STP2 (A4-45) - GND1, GND2 (A4-1, 32)	G-Y - W-B	Stop light switch input	Stop light switch OFF (Brake pedal released)	Below 1.5 V
STP2 (A4-45) - GND1, GND2 (A4-1, 32)	G-Y - W-B	Stop light switch input	Stop light switch ON (Brake pedal released)	8 to 14 V
IG2 (A5-1) - GND3 (A5-4)	B-O - W-B	IG2 power supply	IG switch OFF	Below 1 V
IG2 (A5-1) - GND3 (A5-4)	B-O - W-B	IG2 power supply	IG switch ON	11 to 14 V

Symbols (Terminal No.)	Wiring Color	Terminal Description	Condition	Specified Condition
+BM2 (A5-2) - GND3 (A5-4)	L-Y - W-B	Power supply for motor from battery	Always	11 to 14 V

HINT:

- (*1): A/T
- (*2): 4WD
- (*3): with rear differential lock
- (*4): with AUTO LSD
- (*5): with A-TRAC

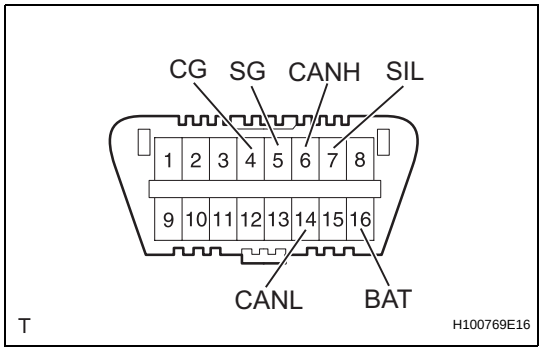

DIAGNOSIS SYSTEM

1. CHECK DLC3

(a) The ECU uses ISO 15765-4 for communication. The terminal arrangement of the DLC3 complies with ISO 15031-3 and matches the ISO 15765-4 format.

Symbols (Terminal No.)	Terminal Description	Condition	Specified Condition
SIL (7) - SG (5)	Bus "+" line	During transmission	Pulse generation
CG (4) - Body ground	Chassis ground	Always	Below 1 Ω
SG (5) - Body ground	Signal ground	Always	Below 1 Ω
BAT (16) - Body ground	Battery positive	Always	10 to 14 V
CANH (6) - CANL (14)	HIGH-level CAN bus line	Ignition switch OFF*	54 to 69 Ω
CANH (6) - CG (4)	HIGH-level CAN bus line	Ignition switch OFF*	200 Ω or more
CANL (14) - CG (4)	LOW-level CAN bus line	Ignition switch OFF*	200 Ω or more
CANH (6) - BAT (16)	HIGH-level CAN bus line	Ignition switch OFF*	6 kΩ or more
CANL (14) - BAT (16)	LOW-level CAN bus line	Ignition switch OFF*	6 kΩ or more

NOTICE:

***: Before measuring the resistance, leave the vehicle as is for at least 1 minute and do not operate the ignition switch, any other switches or the doors.**

If the result is not as specified, the DLC3 may have a malfunction. Repair or replace the harness and connector.

HINT:

Connect the cable of the intelligent tester to the CAN VIM, connect the CAN VIM to the DLC3, turn the ignition switch ON and attempt to use the tester. If the display indicates that a communication error has occurred, there is a problem either with the vehicle or with the tester.

- If communication is normal when the tester is connected to another vehicle, inspect the DLC3 of the original vehicle.

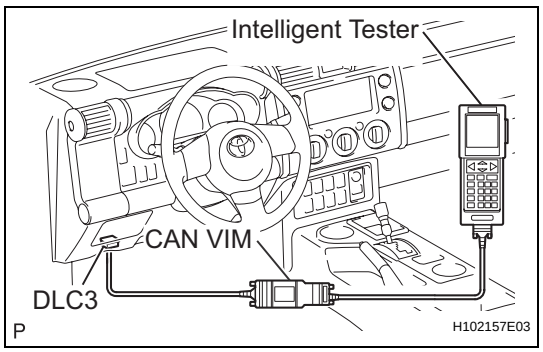

- If communication is still not possible when the tester is connected to another vehicle, the problem is probably in the tester itself. Consult the Service Department listed in the tester's instruction manual.

2. DIAGNOSIS

(a) If the skid control ECU detects a malfunction, the ABS warning light, VSC TRAC warning light, BRAKE warning light, VSC OFF indicator light and/or SLIP indicator light come on in accordance with the trouble area to warn the driver.
The table below indicates which lights come on when there is a malfunction in a particular function.

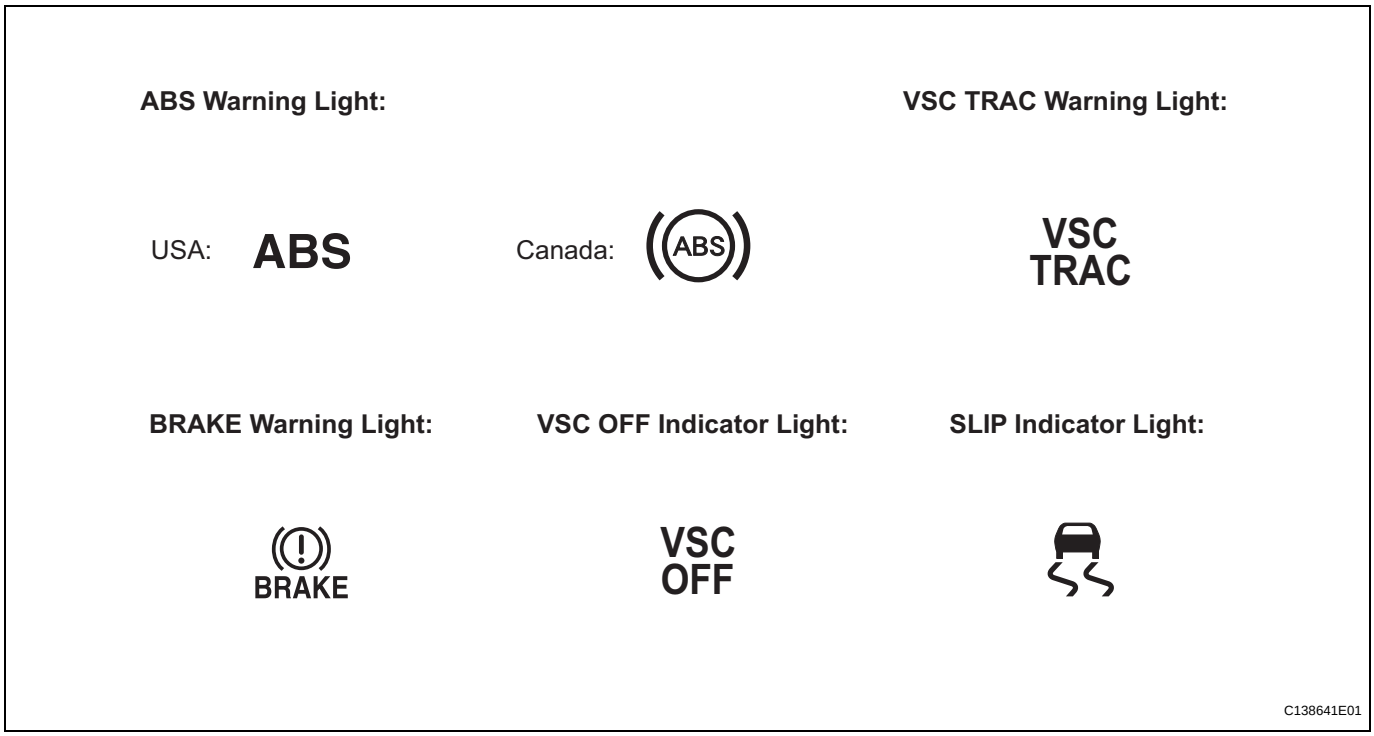

Indicator / Trouble Area	ABS	EBD	BA	VSC	TRAC	AUTO LSD	A-TRAC
ABS Warning Light	○	○	○	-	-	-	-
VSC TRAC Warning Light	-	-	-	○	○	○	○
Brake Warning Light	-	○	-	-	-	-	-
VSC OFF Indicator Light	-	-	-	○	-	-	-
Slip Indicator Light	-	-	-	-	○	○	○

○: Light ON, -: Light OFF

HINT:

- The DTCs are simultaneously stored in the memory. The DTCs can be read by connecting the intelligent tester.

- This system has a sensor signal check function (See page BC-28). The DTCs can be read by connecting SST (09843-18040) between terminals TS and CG of the DLC3 and observing the blinking of the ABS warning light and VSC TRAC warning light, or by connecting the intelligent tester.

3. WARNING LIGHT AND INDICATOR LIGHT CHECK

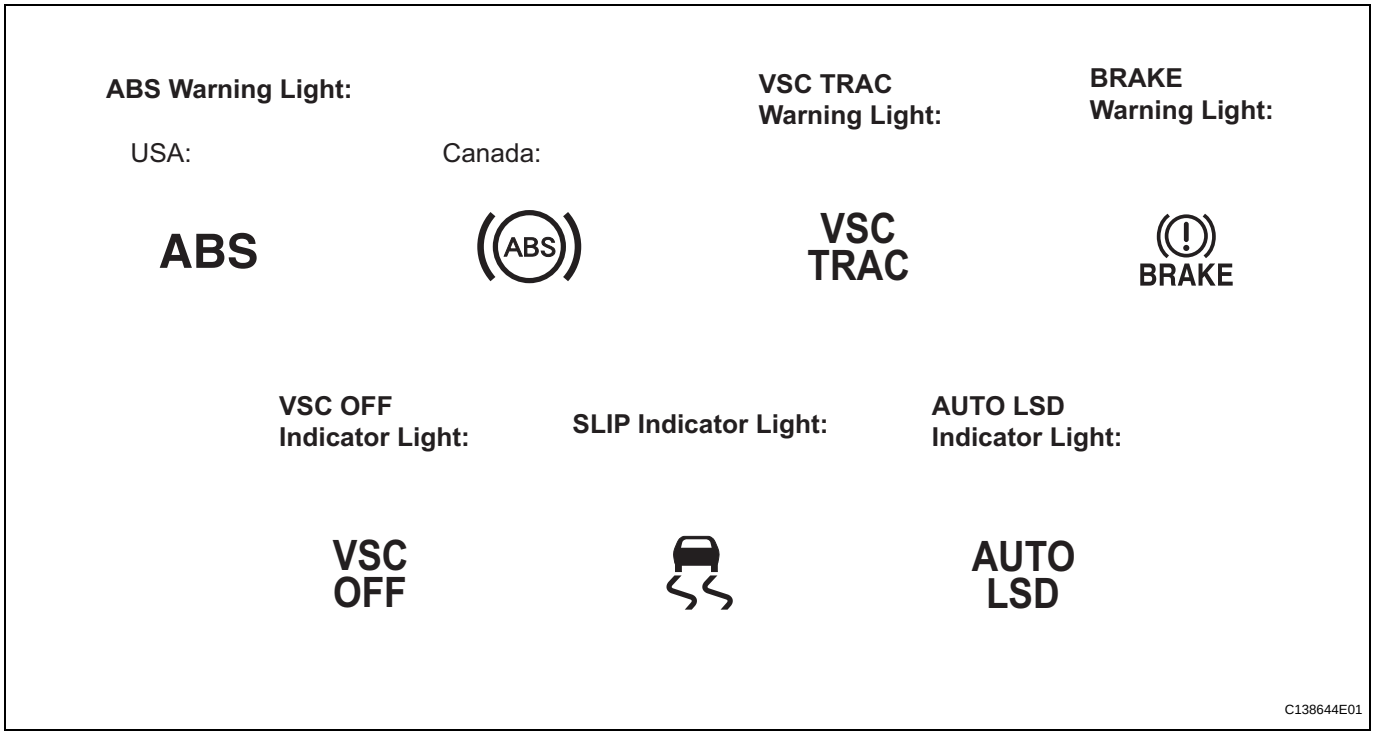

(a) Release the parking brake.
NOTICE:
When releasing the parking brake, set chocks to hold the vehicle for safety.
HINT:
When the parking brake is applied or the level of the brake fluid is low, the BRAKE warning light comes on.

(b) Check that the ABS warning light, VSC TRAC warning light, BRAKE warning light, VSC OFF indicator light, SLIP indicator light and AUTO LSD indicator light come on when the ignition switch is turned on, and go off in about 3 seconds.
HINT:
If the lights do not illuminate, confirm whether the bulbs have burned out, and also check the wire harness between the skid control ECU and the combination meter.
If the light remains on, troubleshoot the effected light circuit by proceeding to the page indicated below.

Trouble Area	See Page
ABS warning light circuit	BC-151
VSC TRAC warning light circuit	BC-156
BRAKE warning light circuit	BC-161

Trouble Area	See Page
VSC OFF indicator light circuit	BC-168
SLIP indicator light circuit	BC-173
AUTO LSD indicator light	BC-177

BC

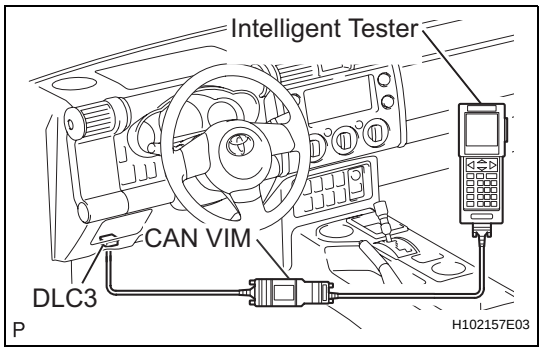

DTC CHECK / CLEAR

1. DTC CHECK (for Using a Intelligent Tester)

(a) Check DTCs.

(1) Connect the intelligent tester to the DLC3.

(2) Turn the ignition switch on.

(3) Turn the tester on.

(4) Read the DTCs using the intelligent tester. Select the following menu items: DIAGNOSIS / OBD/MOBD/ select vehicle / ABS/VSC / DTC INFO / TROUBLE CODES.

2. DTC CLEAR (for Using a Intelligent Tester)

(a) Clear DTCs.

(1) Connect the intelligent tester to the DLC3.

(2) Turn the ignition switch on.

(3) Turn the tester on.

(4) Clear the DTCs using the intelligent tester. Select the following menu items: DIAGNOSIS / OBD/MOBD/ select vehicle / ABS/VSC / DTC INFO / CLEAR CODES.

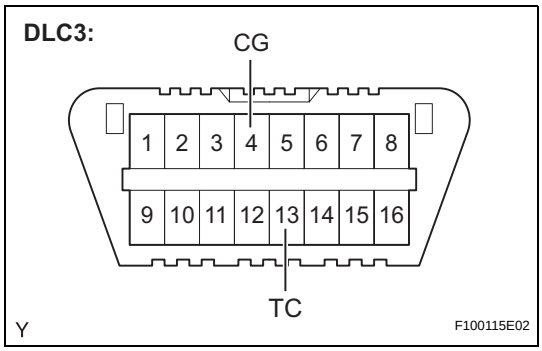

3. DTC CHECK (for Using a SST Check Wire)

(a) Check DTCs.

(1) Using SST, connect terminals TC and CG of the DLC3.

SST 09843-18040

(2) Turn the ignition switch on.

(3) Read 2-digit DTCs by observing the blinking of the ABS warning light and the VSC TRAC warning light on the combination meter.

HINT:

- If no code appears, inspect the ABS warning light circuit, VSC TRAC warning light circuit or TC and CG terminal circuit.

Trouble Area	See page
ABS warning light circuit	BC-151 BC-154
VSC TRAC warning light circuit	BC-156 BC-159
TC and CG terminal circuit	BC-190

- As an example, the blinking patterns of the normal system indication and DTCs 11 and 21 are shown below.

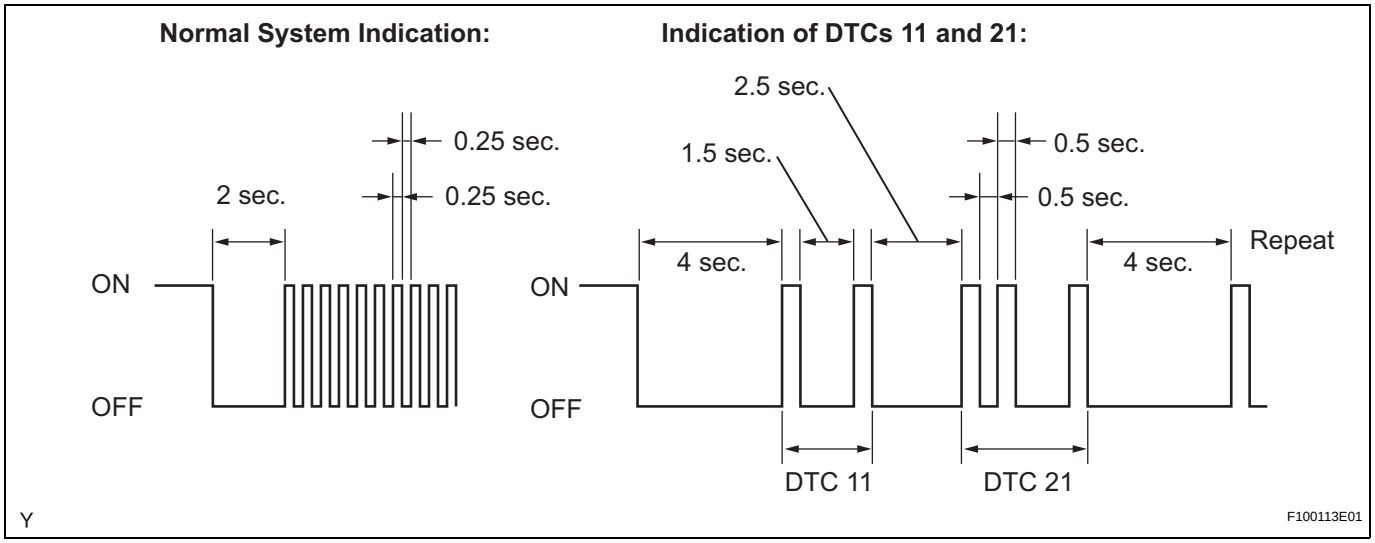

- DTCs are explained in DTC chart (See page BC-53).

(4) After completing the check, disconnect SST from terminals TC and CG of the DLC3, and turn the ignition switch off.
If 2 or more malfunctions are detected at the same time, the lowest numbered DTC is displayed first.

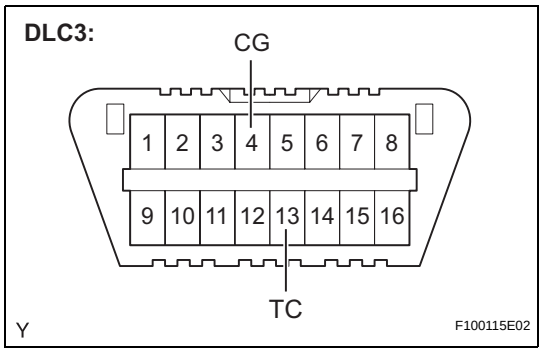

4. DTC CLEAR (for Using a Intelligent Tester)

(a) Clear DTCs.

(1) Using SST, connect terminals TC and CG of the DLC3.

(2) Turn the ignition switch on.
SST 09843-18040

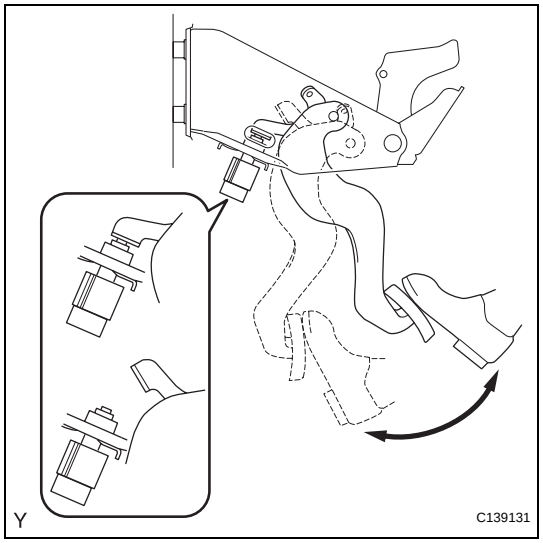

(3) Clear the DTCs stored in the ECU by depressing the brake pedal 8 times or more within 5 seconds.

(4) Check that the ABS warning light and VSC TRAC warning light blink in normal code pattern.

(5) Remove SST from the terminals of the DLC3.

(6) Turn the ignition switch off.
HINT:
Clearing the DTCs cannot be performed by removing the battery cable.

5. END OF DTC CHECK/CLEAR

(a) Turn the ignition switch to the ON position

(b) Check that the ABS warning light and VSC TRAC warning light go off within approximately 3 seconds.

(c) Turn the ignition switch to OFF.

BC

FREEZE FRAME DATA

HINT:

- Whenever a DTC is detected or the ABS operates, the skid control ECU stores the current vehicle (sensor) state as freeze frame data.
- The skid control ECU stores the number of times (maximum: 31) the ignition switch has been turned from OFF to the ON position since the last time the ABS was activated. However, if the vehicle was stopped or at low speed (4.3 mph (7 km/h) or less), or if a DTC is detected, the skid control ECU will not count the number after that.
- Freeze frame data at the time the ABS operates: The skid control ECU stores and updates the data whenever the ABS system operates. When the ECU stores data at the time a DTC is detected, the data stored when the ABS operated is erased.
- Freeze frame data at the time a DTC is detected: When the skid control ECU stores data at the time a DTC is detected, no updates will be performed until the data is cleared.

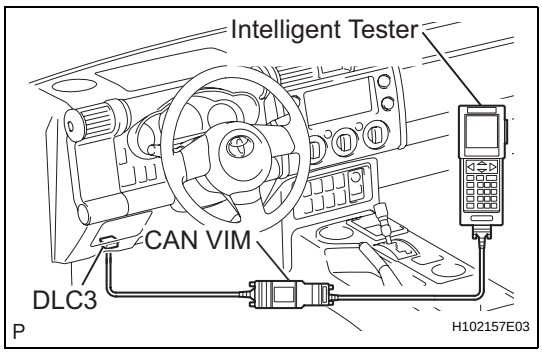

(a) Connect the intelligent tester to the DLC3.
(b) Turn the ignition switch on.
(c) Turn the tester on.
(d) From the display on the tester, select the FREEZE FRAME DATA.

Intelligent Tester	Measurement Item	Reference Value
TROUBLE CODE	Freeze DTC	min.: 0, max.: 65535
STOP LIGHT SW	Stop light switch signal	Stop light switch ON: ON, OFF: OFF
VSC/TRC OFF SW	VSC OFF switch signal	VSC OFF SW ON: ON, OFF: OFF
SHIFT POSITION	Shift lever position	FAIL P,N R D 4 3 2 L
SYSTEM	System status	ABS activated: ABS VSC/TRAC activated: VSC/TRAC BA activated: BA Fail safe mode activated: FAIL SF No system activated: NO SYS
# IG ON	Number of operations turning ignition switch to ON since freeze frame data stored	0 to 31
VEHICLE SPD	Wheel speed sensor reading	Speed indicated on speedometer
STEERING ANG	Steering sensor reading	Left turn: Increase Right turn: Drop (Deceleration)
YAW RATE	Yaw rate angle sensor reading	-128 to 127

Intelligent Tester	Measurement Item	Reference Value
MAS CYL PRESS	Master cylinder pressure sensor reading	Brake pedal released: 0.3 to 0.9 V Brake pedal depressed: 0.8 to 4.5 V
MAS PRESS GRADE	Master cylinder pressure sensor change	-30 to 225 MPa/s
G (RIGHT & LEFT)	Right and left G (Yaw Rate)	-1.869 to 1.869
G (BACK & FORTH)	Back and forth G (Deceleration)	-1.869 to 1.869
WHEEL DIR FR	Front right wheel direction	Wheel direction BACK: BACK Wheel direction FORWARD: FORWARD
WHEEL DIR FL	Front left wheel direction	Wheel direction BACK: BACK Wheel direction FORWARD: FORWARD
WHEEL DIR RR	Rear right wheel direction	Wheel direction BACK: BACK Wheel direction FORWARD: FORWARD
WHEEL DIR RL	Rear left wheel direction	Wheel direction BACK: BACK Wheel direction FORWARD: FORWARD
BUZZER	VSC buzzer signal	VSC buzzer ON: ON, OFF: OFF
RESERVOIR SW	Reservoir level warning switch signal	Reservoir level warning Switch ON: ON, OFF: OFF
PKB SW	Parking brake switch signal	Parking brake Switch ON: ON, OFF: OFF

BC

FAIL-SAFE CHART

1. FAIL SAFE OPERATION

- If there is a problem with any sensor signals or hydraulic brake booster systems, the skid control ECU prohibits the power supply to the actuator in the hydraulic brake booster and informs the ECM of VSC system failure.
  The hydraulic brake booster turns off solenoids and the ECM shuts off the VSC control (traction control signal) from the skid control ECU accordingly, the result of which is as if the ABS, TRAC and VSC systems were not installed.
  ABS control is prohibited, but EBD control continues as far as possible. If EBD control is impossible, the BRAKE warning light comes on to warn the driver (See page BC-41).
- If system components have any malfunctions before starting control, the operation stops immediately.
  If system components have any malfunctions during control, the control stops gradually so as not to trigger a sudden change in vehicle conditions.
  If it is impossible to control the systems, the warning light comes on to inform the driver of the malfunction in the systems (See page BC-41).

HINT:

- If the ABS, BA, TRAC, A-TRAC, VSC and AUTO LSD systems malfunction, the brake system will operate normally without ABS, BA, TRAC, VSC and AUTO LSD controls.
- If the hydraulic brake booster malfunctions, a gradual loss of brake performance is expected, and ABS, BA, TRAC, A-TRAC, VSC and AUTO LSD system controls are prohibited.

(a) ABS, EBD and BA systems:
HINT:
If the ABS, BA or EBD system malfunctions, the following controls are prohibited as shown in the table below.

Malfunction Area	Fail-Safe Operation
ABS system	ABS, BA, TRAC, A-TRAC, VSC and AUTO LSD control prohibited
BA system	ABS, BA, TRAC, A-TRAC, VSC and AUTO LSD control prohibited
EBD system	ABS, BA, EBD, TRAC, A-TRAC, VSC and EBD control prohibited

(b) TRAC, A-TRAC, VSC and AUTO LSD systems:
HINT:
If TRAC, A-TRAC, VSC and/or AUTO LSD malfunction, the following controls are prohibited as shown in the table below.

Malfunction Area	Fail-Safe Operation
Engine control system (TRAC, A-TRAC and VSC systems)	Before control: Disables control During control: Uses only brakes to effect control
Brake control system (VSC system)	Before control Disables control During control Uses only brakes to effect control

Malfunction Area	Fail-Safe Operation
Brake control system (TRAC, A-TRAC and AUTO LSD systems)	Before control: Disables control During control: Disables control (by gradually ending control)

2. SYSTEM TEMPERATURE PROTECTION OPERATION

If the TRAC, A-TRAC or AUTO LSD system has been used constantly for a long time, the temperature of the hydraulic brake booster may increase excessively. If the temperature increases excessively, the skid control buzzer sounds intermittently. If the temperature increases further, the skid control buzzer sounds for 3 seconds repeatedly and the indicator light either comes on or blinks.

System	Indicator Condition
TRAC or A-TRAC system	SLIP indicator light comes on
AUTO LSD system	SLIP indicator light comes on AUTO LSD indicator light stays on

BC

DATA LIST / ACTIVE TEST

1. DATA LIST

HINT:

By referring to the DATA LIST displayed on the intelligent tester, the value and status of parts such as switches, sensors and actuator can be read without removing any parts. Reading the DATA LIST as the first step of troubleshooting is one method of shortening diagnostic time.

(a) Connect the intelligent tester to the DLC3.
(b) Turn the ignition switch on.
(c) Turn the intelligent tester on.
(d) Select the following menu items: Chassis / ABS/ VSC/TRC / Data List.

Item	Measurement Item : Range (Display)	Normal Condition	Diagnostic Note
HB MOT RELAY	HB motor relay : ON or OFF	ON : Motor relay ON OFF : Motor relay OFF	-
SOL RELAY	Solenoid relay : ON or OFF	ON : Solenoid relay ON OFF : Solenoid relay OFF	-
IDLE SW	Main idle switch : ON or OFF	ON : Accelerator pedal released OFF : Accelerator pedal depressed	-
STOP LIGHT SW	Stop light switch : ON or OFF	ON : Brake pedal depressed OFF : Brake pedal released	-
PKB SW	Parking brake switch : ON or OFF	ON : Parking brake applied OFF : Parking brake released	-
RESERVOIR SW	Reservoir level warning switch : ON or OFF	ON : Switch ON OFF : Switch OFF	-
ABS OPERT FR	ABS operation (FR) : BEFORE or OPERATE	BEFORE : No ABS operation (FR) OPERATE : During ABS operation (FR)	-
ABS OPERT FL	ABS operation (FL) : BEFORE or OPERATE	BEFORE : No ABS operation (FL) OPERATE : During ABS operation (FL))	-
ABS OPERT RR	ABS operation (RR) : BEFORE or OPERATE	BEFORE : No ABS operation (RR) OPERATE : During ABS operation (RR)	-
ABS OPERT RL	ABS operation (RL) : BEFORE or OPERATE	BEFORE : No ABS operation (RL) OPERATE : During ABS operation (RL)	-
WHEEL SPD FR	Wheel speed sensor (FR) reading : min.: 0 MPH (0 km:h), max.: 202 MPH (326 km:h)	Actual wheel speed	Similar speed to that indicated on speedometer
WHEEL SPD FL	Wheel speed sensor (FL) reading : min.: 0 MPH (0 km:h), max.: 202 MPH (326 km:h)	Actual wheel speed	Similar speed to that indicated on speedometer
WHEEL SPD RR	Wheel speed sensor (RR) reading : min.: 0 MPH (0 km:h), max.: 202 MPH (326 km:h)	Actual wheel speed	Similar speed to that indicated on speedometer
WHEEL SPD RL	Wheel speed sensor (RL) reading : min.: 0 MPH (0 km:h), max.: 202 MPH (326 km:h)	Actual wheel speed	Similar speed to that indicated on speedometer
DECELERAT SEN	Deceleration sensor 1 reading : min.: -1.869 G, max.: 1.869 G	Approximately 0 +- 0.13G in still condition	Reading changes when vehicle bounced

Item	Measurement Item : Range (Display)	Normal Condition	Diagnostic Note
DECELERAT SEN2	Deceleration sensor 2 reading : min.: -1.869 G, max.: 1.869 G	Approximately 0 +- 0.13G in still condition	Reading changes when vehicle bounced
IG VOLTAGE	ECU power supply voltage : TOO LOW : NORMAL : TOO HIGH	TOO HIGH: 14 V or more NORMAL: 9.5 V or 14V TOO LOW: Below 9.5 V	-
SFRR	ABS solenoid (SFRR) : ON or OFF	ON: Operates OFF: Does not operate	-
SFRH	ABS solenoid (SFRH) : ON or OFF	ON: Operates OFF: Does not operate	-
SFLR	ABS solenoid (SFLR) : ON or OFF	ON: Operates OFF: Does not operate	-
SFLH	ABS solenoid (SFLH) : ON or OFF	ON: Operates OFF: Does not operate	-
SRRR (SRR)	ABS solenoid (SRRR [SRR]) : ON or OFF	ON: Operates OFF: Does not operate	-
SRRH (SRH)	ABS solenoid (SRRH [SRH]) : ON or OFF	ON: Operates OFF: Does not operate	-
SRLR	ABS solenoid (SRLR) : ON or OFF	ON: Operates OFF: Does not operate	-
SRLH	ABS solenoid (SRLH) : ON or OFF	ON: Operates OFF: Does not operate	-
SRCF (SA1)	TRAC solenoid (SRCF [SMCF]) : ON or OFF	ON: Operates OFF: Does not operate	-
SRCR (SA2)	TRAC solenoid (SRCR [SREA]) : ON or OFF	ON: Operates OFF: Does not operate	-
SRMF (SMCF, SA3)	TRAC solenoid (SRMF [SREC]) : ON or OFF	ON: Operates OFF: Does not operate	-
SRMR (SMCR, STR)	TRAC solenoid (SRMR [SMCR, STR]) : ON or OFF	ON: Operates OFF: Does not operate	-
VEHICLE SPD	Maximum wheel speed sensor reading : min.: 0 MPH (0 km:h), max.: 202 MPH (326 km:h)	Actual engine speed	Speed indicated on speedometer
MAS CYL PRS 1	Master cylinder pressure sensor 1 reading : min.: 0 V, max.: 5 V	When brake pedal released : 0.3 V to 0.9 V	Reading increases when brake pedal depressed
WHEEL DIR FR	Front right wheel direction	Wheel direction BACK: BACK, FORWARD: FORWARD	-
WHEEL DIR FL	Front left wheel direction	Wheel direction BACK: BACK, FORWARD: FORWARD	-
WHEEL DIR RR	Rear right wheel direction	Wheel direction BACK: BACK, FORWARD: FORWARD	-
WHEEL DIR RL	Rear left wheel direction	Wheel direction BACK: BACK, FORWARD: FORWARD	-
SPD SEN FR	FR speed sensor open detection : OPN_DET or NORMAL	OPN_DET: Momentary interruption NORMAL: Normal	-
SPD SEN FL	FL speed sensor open detection : OPN_DET or NORMAL	OPN_DET: Momentary interruption NORMAL: Normal	-
SPD SEN RR	RR speed sensor open detection : OPN_DET or NORMAL	OPN_DET: Momentary interruption NORMAL: Normal	-
SPD SEN RL	RL speed sensor open detection : OPN_DET or NORMAL	OPN_DET: Momentary interruption NORMAL: Normal	-
EFI COM	EFI communication open detection : OPN_DET or NORMAL	OPN_DET: Momentary interruption NORMAL: Normal	-

Item	Measurement Item : Range (Display)	Normal Condition	Diagnostic Note
YAWRATE SEN	Yaw rate sensor open detection : OPN_DET or NORMAL	OPN_DET: Momentary interruption NORMAL: Normal	-
DECELE SEN	Deceleration sensor open detection : OPN_DET or NORMAL	OPN_DET: Momentary interruption NORMAL: Normal	-
STEERING SEN	Steering angle sensor open detection : OPN_DET or NORMAL	OPN_DET: Momentary interruption NORMAL: Normal	-
ACC SEN	Accumulator pressure sensor open detection : OPN_DET or NORMAL	OPN_DET: Momentary interruption NORMAL: Normal	-
ACCELERATOR %	Different % of present accelerator	min.: 0 max.: 128	-
TORQUE	Real output torque	min.: -1024 max.: 1016	-
TEST MODE	Test mode : Normal or TEST	NORMAL: Normal mode TEST: During test mode	-
MAS CYL PRESS 1	Master cylinder pressure sensor 1 reading : min.: 0V, max.: 5V	When brake pedal released: 0.3 to 0.9V	Reading increases when brake pedal depressed
ACC PRESS SENS	Accumulator pressure sensor reading : min.: 0 V, max.: 5 V	min.: 3 V max.: 5 V	If value constant regardless of pump operation, accumulator pressure sensor malfunction suspected.
#CODES	Number of DTC recorded : min.: 0, max.: 255	min.: 0 max.: 255	-

2. ACTIVE TEST

HINT:

Performing the ACTIVE TEST using the intelligent tester allows relays and actuators to be operated without removing any parts. Performing the ACTIVE TEST as the first step of troubleshooting is one method of shortening diagnostic time.

It is possible to display the DATA LIST during the ACTIVE TEST.

(a) Connect the intelligent tester to the DLC3.
(b) Turn the ignition switch on.
(c) Turn the tester on.
(d) By following the prompts on the tester, perform the ACTIVE TEST.

HINT:

- The ignition switch must be turned on to proceed to the ACTIVE TEST using the intelligent tester.
- The motors stop automatically after 5 seconds of activation to prevent them from being damaged. When repeatedly activated, certain intervals are required.
- Each solenoid stops automatically after 2 seconds of activation to prevent them from being damaged, and can be operated again after a certain interval.
- Do not depress the brake pedal while only the pressure reduction solenoid valves are on.

- Do not drive 2 or more solenoids simultaneously except to operate the pressure holding solenoid valves and pressure reduction solenoid valves of each wheel.

Item	Test Details	Diagnostic Note
SFRR	Turns ABS solenoid (SFRR) ON or OFF	Operation of solenoid (clicking sound) can be heard
SFRH	Turns ABS solenoid (SFRH) ON or OFF	Operation of solenoid (clicking sound) can be heard
SFLR	Turns ABS solenoid (SFLR) ON or OFF	Operation of solenoid (clicking sound) can be heard
SFLH	Turns ABS solenoid (SFLH) ON or OFF	Operation of solenoid (clicking sound) can be heard
SRRR	Turns ABS solenoid (SrRR) ON or OFF	Operation of solenoid (clicking sound) can be heard
SRRH	Turns ABS solenoid (SRRH) ON or OFF	Operation of solenoid (clicking sound) can be heard
SRLR	Turns ABS solenoid (SRLR) ON or OFF	Operation of solenoid (clicking sound) can be heard
SRLH	Turns ABS solenoid (SFLH) ON or OFF	Operation of solenoid (clicking sound) can be heard
SRCF (SA1)	Turns TRAC solenoid SRCF (SMCF) ON or OFF	Operation of solenoid (clicking sound) can be heard
SRCR (SA2)	Turns TRAC solenoid SRCR (SREA) ON or OFF	Operation of solenoid (clicking sound) can be heard
SRMF (SMCF, SA3)	Turns TRAC solenoid SRMF (SREC) ON or OFF	Operation of solenoid (clicking sound) can be heard
SRMR (SMCR, STR)	Turns TRAC solenoid SRMR (STR) ON or OFF	Operation of solenoid (clicking sound) can be heard
SOL RELAY	Turns ABS solenoid relay ON or OFF	Operation of solenoid (clicking sound) can be heard
ABS MOT RELAY	Turns ABS motor relay ON or OFF	Operation of motor can be heard
ABS WARN LIGHT	Turns ABS warning light ON or OFF	Operation of motor can be heard
VSC WARN LIGHT	Turns VSC TRAC warning light ON or OFF	Operation of motor can be heard
VSC/TRC OFF IND	Turns VSC OFF indicator ON or OFF	Operation of motor can be heard
SLIP INDI LIGHT	Turn SLIP indicator light ON or OFF	Operation of motor can be heard
BRAKE WRN LIGHT	Turns BRAKE warning light ON or OFF	Operation of motor can be heard
VSC/BR WARN BUZ	Turns skid control buzzer ON or OFF	Buzzer can be heard
STP LIGHT RELAY	Turns stop light relay ON or OFF	Observe stop light

BC

DIAGNOSTIC TROUBLE CODE CHART

NOTICE:
When removing any parts, turn the ignition switch off.
HINT:

- If no abnormality is found when inspecting parts, check the skid control ECU and check for poor contact at ground points.
- If a DTC is displayed during the DTC check, check the circuit for the DTC listed in the table below. For details of each DTC, refer to the page indicated.
- When 2 or more DTCs are detected, perform circuit inspections one by one until the problem is identified.
- All DTCs in the table below are detected in accordance with 1 trip detection logic.

DTC chart of ABS

DTC No.	Detection Item	Trouble Areas	See page
C0200/31 (*1)	Front Speed Sensor RH Circuit	1. Front speed sensor RH 2. Front speed sensor RH circuit 3. Sensor installation 4. Skid control sensor wire 5. Master cylinder solenoid (skid control ECU)	BC-59
C0205/32 (*1)	Front Speed Sensor LH Circuit	1. Front speed sensor LH 2. Front speed sensor LH circuit 3. Sensor installation 4. Skid control sensor wire 5. Master cylinder solenoid (skid control ECU)	BC-59
C0210/33 (*1)	Rear Speed Sensor RH Circuit	1. Rear speed sensor RH 2. Rear speed sensor RH circuit 3. Sensor installation 4. Skid control sensor wire 5. Master cylinder solenoid (skid control ECU)	BC-67
C0215/34 (*1)	Rear Speed Sensor LH Circuit	1. Rear speed sensor LH 2. Rear speed sensor LH circuit 3. Sensor installation 4. Skid control sensor wire 5. Master cylinder solenoid (skid control ECU)	BC-67
C0226/21	SFR Solenoid Circuit	Master cylinder solenoid	BC-74
C0236/22	SFL Solenoid Circuit	Master cylinder solenoid	BC-74
C0246/23	SRR Solenoid Circuit	Master cylinder solenoid	BC-74
C0256/24	SRL Solenoid Circuit	Master cylinder solenoid	BC-74
C0278/11	Open in ABS Solenoid Relay Circuit	1. ABS SOL fuse 2. +BS terminal circuit 3. Master cylinder solenoid (skid control ECU)	BC-76
C0279/12	Short to B+ in ABS Solenoid Relay Circuit	1. ABS SOL fuse 2. +BS terminal circuit 3. Master cylinder solenoid (skid control ECU)	BC-76
C1202/58	Brake Fluid Level Low / Open Circuit in Brake Fluid Level Warning Switch Circuit	1. Brake fluid level 2. Brake master cylinder reservoir sub-assembly (brake fluid level warning switch) 3. Brake fluid level warning switch circuit 4. Master cylinder solenoid (skid control ECU)	BC-83

DTC No.	Detection Item	Trouble Areas	See page
C1225/25	SMC Solenoid Circuit	Master cylinder solenoid	BC-74
C1226/26	SPC Solenoid Circuit	Master cylinder solenoid	BC-74
C1227/27	SRC Solenoid Circuit	Master cylinder solenoid	BC-74
C1228/28	STR Solenoid Circuit	Master cylinder solenoid	BC-74
C1235/35	Foreign Object is Attached on Tip of Front Speed Sensor RH	1. Front speed sensor RH 2. Front speed sensor RH circuit 3. Master cylinder solenoid (skid control ECU)	BC-59
C1236/36	Foreign Object is Attached on Tip of Front Speed Sensor LH	1. Front speed sensor LH 2. Front speed sensor LH circuit 3. Master cylinder solenoid (skid control ECU)	BC-59
C1238/38	Foreign Object is Attached on Tip of Rear Speed Sensor RH	1. Rear speed sensor RH 2. Rear speed sensor RH circuit 3. Master cylinder solenoid (skid control ECU)	BC-67
C1239/39	Foreign Object is Attached on Tip of Rear Speed Sensor LH	1. Rear speed sensor LH 2. Rear speed sensor LH circuit 3. Master cylinder solenoid (skid control ECU)	BC-67
C1241/41	Low Battery Positive Voltage	1. Battery 2. Charging system 3. ECU-IG fuse 4. Power source circuit 5. Master cylinder solenoid (skid control ECU)	BC-97
C1242/42	IG2 Power Source Circuit	1. Battery 2. Charging system 3. IGN fuse 4. Power source circuit 5. Master cylinder solenoid (skid control ECU)	BC-101
C1243/43 (*1)	Deceleration Sensor Stuck Malfunction	1. Yaw rate and deceleration sensor 2. Yaw rate and deceleration sensor circuit	BC-79
C1244/44	Open or Short in Deceleration Sensor Circuit	1. Yaw rate and deceleration sensor 2. Yaw rate and deceleration sensor circuit	BC-79
C1245/45 (*1)	Deceleration Sensor Output Malfunction	1. Yaw rate and deceleration sensor 2. Yaw rate and deceleration sensor circuit	BC-79
C1246/46	Master Cylinder Pressure Sensor Malfunction	1. Hydraulic brake booster (master cylinder pressure sensor) 2. Stop light switch circuit 3. Master cylinder solenoid (skid control ECU)	BC-104
C1248/48	Open Circuit in Rear Differential Lock	1. Rear differential lock position switch 2. Rear differential lock position switch circuit 3. Master cylinder solenoid (skid control ECU)	BC-108
C1249/49	Open in Stop Light Switch Circuit	1. Stop light switch assembly 2. Stop light switch circuit 3. Master cylinder (skid control ECU)	BC-111
C1251/51 (*4)	Open in Pump Motor Circuit	1. Brake booster pump assembly 2. Master cylinder solenoid (skid control ECU)	BC-115

DTC No.	Detection Item	Trouble Areas	See page
C1252/52 (*2) (*4)	Brake Booster Pump Motor on Time Abnormally Long	1. Brake booster pump assembly 2. Hydraulic brake booster (accumulator pressure sensor) 3. Master cylinder solenoid (skid control ECU)	BC-117
C1253/53 (*2)	Hydro Booster Pump Motor Relay Malfunction	1. ABS MTR fuse 2. +BS terminal circuit 3. Master cylinder solenoid (skid control ECU)	BC-120
C1254/54	Pressure Switch Circuit	1. Master cylinder solenoid (skid control ECU) 2. Hydraulic brake booster (accumulator pressure sensor) 3. Hydraulic brake booster (master cylinder pressure sensor)	BC-124
C1256/56 (*2) (*4)	Accumulator Low Pressure	1. Hydraulic circuit 2. Hydraulic brake booster (accumulator pressure sensor) 3. Master cylinder solenoid (skid control ECU)	BC-127
C1257/57	IG Power Source	1. Brake booster pump assembly 2. Master cylinder solenoid (skid control ECU)	BC-130
C1268/68 (*3)	Transfer "L4" Position Switch Circuit	1. Transfer indicator switch (L4 position) 2. Transfer indicator switch (L4 position) circuit 3. Master cylinder solenoid (skid control ECU)	BC-138
C1337/37	Different Diameter Tire Malfunction	1. Speed sensor circuit 2. Tire sizes 3. Master cylinder solenoid (skid control ECU)	BC-142
C1381/97	Yaw Rate and / or Acceleration Sensor Power Supply Voltage Malfunction	1. Yaw rate and deceleration sensor 2. Yaw rate and deceleration sensor circuit	BC-79
U0073/94	Control Module Communication Bus OFF	CAN communication system	BC-149
U0124/95	Lost Communication with Lateral Acceleration Sensor Module	CAN communication system	BC-149

HINT:

(*1), (*2):

Even after the trouble areas are repaired, the ABS warning light will not go off unless the following operations are performed.

- (*1):
  (a) Drive the vehicle at 12 mph (20 km/h) for 30 seconds or more and check that the ABS warning light goes off.
  (b) Clear the DTC.
- (*2):
  (a) Keep the vehicle stationary for 5 seconds or more and depress the brake pedal several times.
  (b) Repeat the above operation 3 times or more and check that the ABS warning light goes off.
  (c) Clear the DTC.
- (*3): 4WD only
- (*4): Skid control buzzer sounds.

DTC chart of VSC

DTC No.	Detection Item	Trouble Areas	See page
C1201/51	Engine Control System Malfunction	Engine control system	BC-82
C1203/53	ECM Communication Circuit Malfunction	1. CAN communication system 2. ECM	BC-86
C1210/36	Zero Point Calibration of Yaw Rate Sensor Undone	1. Yaw rate sensor and deceleration sensor 2. Zero point calibration not complete 3. PNP switch circuit (P position) (A/T) 4. Parking brake switch circuit (M/T) 5. Master cylinder solenoid (skid control ECU)	BC-87
C1223/43	ABS Control System Malfunction	ABS control system	BC-92
C1231/31	Steering Angle Sensor Circuit Malfunction	1. Steering angle sensor 2. Steering angle sensor circuit 3. CAN communication system 4. Master cylinder solenoid (skid control ECU)	BC-93
C1232/32	Stuck in Deceleration Sensor	1. Yaw rate and deceleration sensor 2. Yaw rate and deceleration sensor circuit	BC-79
C1234/34	Yaw Rate Sensor Malfunction	1. Yaw rate and deceleration sensor 2. Yaw rate and deceleration sensor circuit	BC-79
C1258/58	Transfer 4WD Position Switch Circuit	1. Transfer indicator switch (4WD position) (A/T) 2. Transfer indicator switch (4WD position) circuit (A/T) 3. Transfer indicator switch (center differential lock position) (M/T) 4. Transfer indicator switch (center differential lock position) circuit (A/T) 5. Master cylinder solenoid (skid control ECU)	BC-131
C1290/66	Steering Angle Sensor Zero Point Malfunction	Steering angle sensor	BC-93
C1336/39	Zero Point Calibration of Acceleration Sensor Undone	1. Yaw rate sensor and deceleration sensor 2. Zero point calibration not complete 3. PNP switch circuit (P position) (A/T) 4. Parking brake switch circuit (M/T) 5. Master cylinder solenoid (skid control ECU)	BC-87
C1380/64	Stop Light Control Relay Malfunction	1. Stop light switch assembly 2. Stop light switch circuit 3. Stop LP CTRL relay 4. Master cylinder solenoid (skid control ECU)	BC-144
U0100/65	Lost Communication with ECM / PCM	CAN communication system	BC-149
U0123/62	Lost Communication with Yaw Rate Sensor Module	CAN communication system	BC-149
U0126/63	Lost Communication with Steering Angle Sensor Module	CAN communication system	BC-149

Test Mode DTC of ABS

DTC No.	Detection Item	Trouble Areas	See page
C1271/71	Low Output Signal of Front Speed Sensor RH (Test Mode DTC)	1. Front speed sensor RH 2. Front speed sensor RH circuit 3. Sensor installation 4. Skid control sensor wire 5. Master cylinder solenoid (skid control ECU)	BC-59
C1272/72	Low Output Signal of Front Speed Sensor LH (Test Mode DTC)	1. Front speed sensor LH 2. Front speed sensor LH circuit 3. Sensor installation 4. Skid control sensor wire 5. Master cylinder solenoid (skid control ECU)	BC-59
C1273/73	Low Output Signal of Rear Speed Sensor RH (Test Mode DTC)	1. Rear speed sensor RH 2. Rear speed sensor RH circuit 3. Sensor installation 4. Skid control sensor wire 5. Master cylinder solenoid (skid control ECU)	BC-67
C1274/74	Low Output Signal of Rear Speed Sensor LH (Test Mode DTC)	1. Rear speed sensor LH 2. Rear speed sensor LH circuit 3. Sensor installation 4. Skid control sensor wire 5. Master cylinder solenoid (skid control ECU)	BC-67
C1275/75	Abnormal Change in Output Signal of Front Speed Sensor RH (Test Mode DTC)	1. Front speed sensor RH 2. Front speed sensor RH circuit 3. Master cylinder solenoid (skid control ECU)	BC-59
C1276/76	Abnormal Change in Output Signal of Front Speed Sensor LH (Test Mode DTC)	1. Front speed sensor LH 2. Front speed sensor LH circuit 3. Master cylinder solenoid (skid control ECU)	BC-59
C1277/77	Abnormal Change in Output Signal of Rear Speed Sensor RH (Test Mode DTC)	1. Rear speed sensor RH 2. Rear speed sensor RH circuit 3. Master cylinder solenoid (skid control ECU)	BC-67
C1278/78	Abnormal Change in Output Signal of Rear Speed Sensor LH (Test Mode DTC)	1. Rear speed sensor LH 2. Rear speed sensor LH circuit 3. Master cylinder solenoid (skid control ECU)	BC-67
C1279/79	Deceleration Sensor Output Voltage Malfunction (Test Mode DTC)	1. Yaw rate and deceleration sensor 2. Yaw rate and deceleration sensor circuit	BC-79
C1281/81	Master Cylinder Pressure Sensor Output Malfunction (Test Mode DTC)	1. Hydraulic brake booster (master cylinder pressure sensor) 2. Stop light switch circuit 3. Master cylinder solenoid (skid control ECU)	BC-104
C1282/82	Center Differential Lock Position Switch Malfunction (Test Mode DTC)	1. Transfer indicator switch (4WD position) (A/T) 2. Transfer indicator switch (4WD position) circuit (A/T) 3. Transfer indicator switch (center differential lock position) (M/T) 4. Transfer indicator switch (center differential lock position) circuit (A/T) 5. Master cylinder solenoid (skid control ECU)	BC-131

DTC No.	Detection Item	Trouble Areas	See page
C1283/83	L4 Position Switch Malfunction (Test Mode DTC)	1. Transfer indicator switch (L4 position) 2. Transfer indicator switch (L4 position) circuit 3. Master cylinder solenoid (skid control ECU)	BC-138

Test Mode DTC of VSC

DTC No.	Detection Item	Trouble Areas	See page
C0371/71	Yaw Rate Sensor (Test Mode DTC)	1. Yaw rate and deceleration sensor 2. Yaw rate and deceleration sensor circuit	BC-79

DTC	C0200/31	Front Speed Sensor RH Circuit
DTC	C0205/32	Front Speed Sensor LH Circuit
DTC	C1235/35	Foreign Object is Attached on Tip of Front Speed Sensor RH
DTC	C1236/36	Foreign Object is Attached on Tip of Front Speed Sensor LH
DTC	C1271/71	Low Output Signal of Front Speed Sensor RH (Test Mode DTC)
DTC	C1272/72	Low Output Signal of Front Speed Sensor LH (Test Mode DTC)
DTC	C1275/75	Abnormal Change in Output Signal of Front Speed Sensor RH (Test Mode DTC)
DTC	C1276/76	Abnormal Change in Output Signal of Front Speed Sensor LH (Test Mode DTC)

BC

DESCRIPTION

The speed sensors detect the wheel speeds and send appropriate signals to the skid control ECU. Speed sensor rotors have rows of alternating N and S magnetic poles, and their magnetic fields change as the rotors turn.

The speed sensors detect those magnetic changes and send pulse signals to the skid control ECU. The ECU monitors the wheel speeds through these pulse signals to control the ABS system.

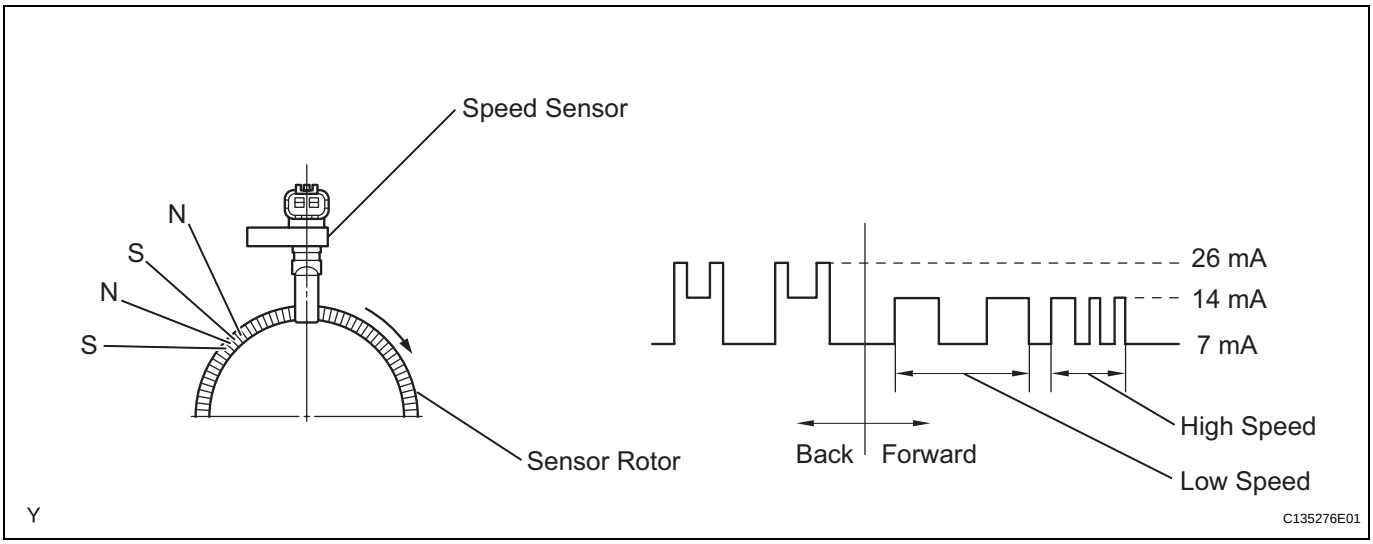

DTC No.	DTC Detecting Conditions	Trouble Areas
C0200/31 C0205/32	When any one of following conditions met: 1. At vehicle speed of 6 mph (10 km/h) or more, speed sensor signal circuit open or short for 1 second or more. 2. Speed sensor signal open circuit occurs at least 255 times. 3. Speed sensor signal circuit open for 0.5 seconds or more. 4. With ignition switch on and vehicle speed at 2 mph (3 km/h) or more, 3 wheels output reverse rotation signals and 1 wheel outputs high-frequency pulse 75 times. 5. At vehicle speed of 6 mph (10 km/h) or more, speed sensor output halves for 5 seconds. 6. At vehicle speed of 6 mph (10 km/h) or more, changing of normal rotation signal and reverse rotation signal occurs 7 times within 0.006 seconds while ignition switch on. 7. Signal output of any one wheel different from signals of other 3 wheels for 1 second, at vehicle speed of 18 mph (30 km/h) or more. 8. Reverse rotation signal produced for 1 second or more at vehicle speed of 62 mph (100 km/h) or more. 9. At vehicle speed of 18 mph (30 km/h) or more, one speed sensor malfunctions and differs in signal direction from other 3 wheels. 10. When voltage at IG1 terminal 9.5 V or more, voltage of sensor power supply decreases for 0.5 seconds or more.	• Front speed sensor • Front speed sensor circuit • Sensor installation • Skid control sensor wire • Master cylinder solenoid (skid control ECU)
C1235/35 C1236/36	When either of following conditions (1 or 2) detected: 1. At vehicle speed of 12 mph (20 km/h) or more, noise in speed sensor signal continues for 5 seconds or more. 2. At vehicle speed of 6 mph (10 km/h) or more, noise detected as rotor turns, for 15 seconds or more.	• Front speed sensor • Front speed sensor circuit • Master cylinder solenoid (skid control ECU)
C1271/71 C1272/72	Detected only during test mode.	• Front speed sensor • Front speed sensor circuit • Sensor installation • Skid control sensor wire • Master cylinder solenoid (skid control ECU)
C1275/75 C1276/76	Detected only during test mode.	• Front speed sensor • Front speed sensor rotor • Master cylinder solenoid (skid control ECU)

BC

WIRING DIAGRAM

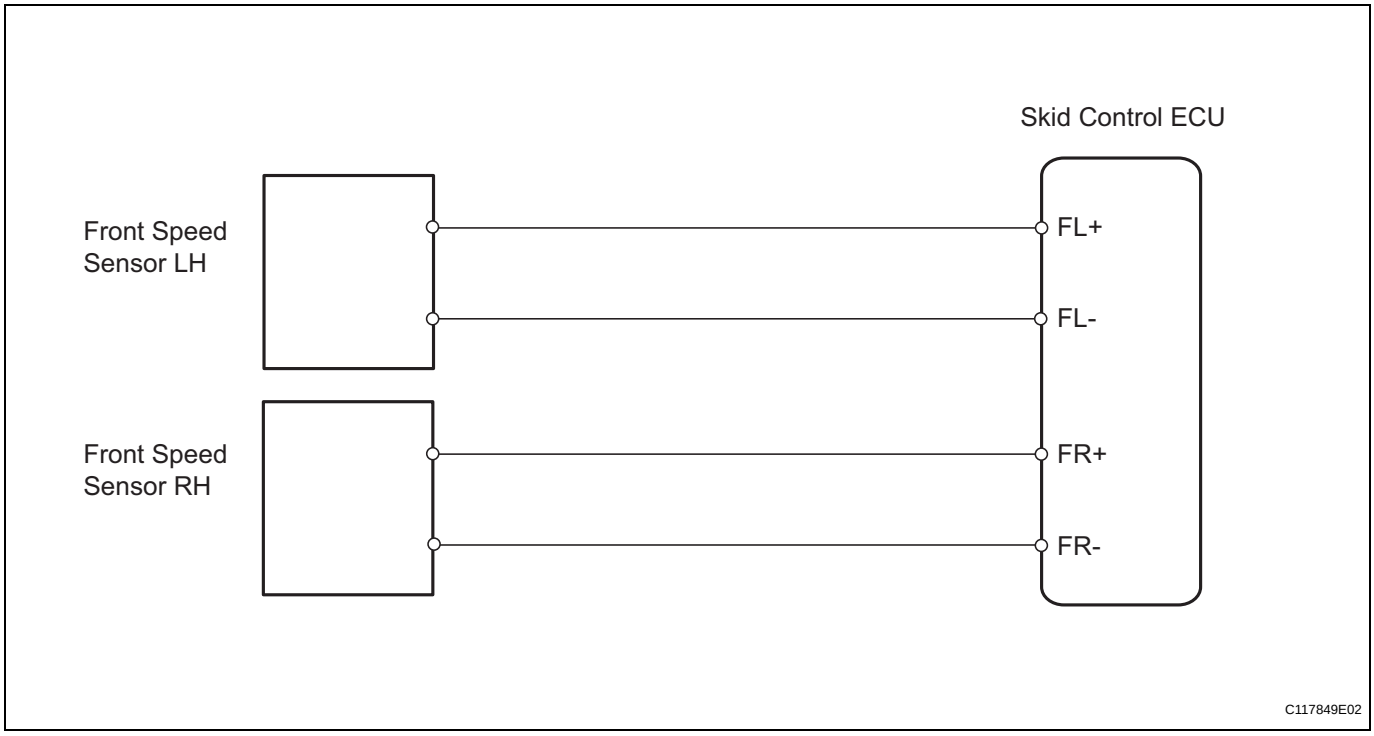

INSPECTION PROCEDURE

NOTICE:

- **When replacing the master cylinder solenoid, perform zero point calibration (See page BC-24).**
- **Check the speed sensor signal in test mode after clearing or replacement (See page BC-28).**

1	CHECK HARNESS AND CONNECTOR (MOMENTARY INTERRUPTION)

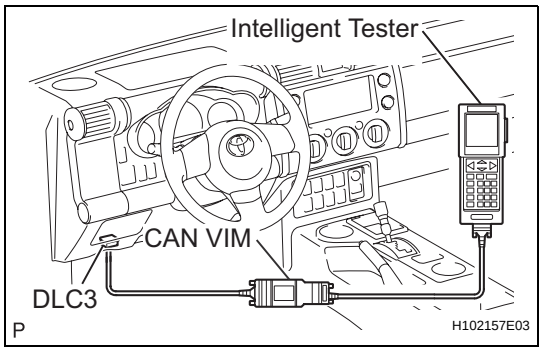

(a) Connect the intelligent tester to the DLC3.
(b) Turn the ignition switch on.
(c) Turn the tester on.
(d) Using a intelligent tester, check for any momentary interruption in the wire harness and connector corresponding to a DTC.
Select the following menu items: DIAGNOSIS / OBD/ MOBD / select vehicle / ABS/VSC / DATA LIST.

DATA LIST: ABS/VSC

Item (Display)	Measurement Item / Range (Display)	Normal Condition
SPD SEN FR	FR speed sensor open detection: OPN_DET or NORMAL	OPN_DET: Momentary interruption NORMAL: Normal
SPD SEN FL	FL speed sensor open detection: OPN_DET or NORMAL	OPN_DET: Momentary interruption NORMAL: Normal

OK:

There are no momentary interruptions.

HINT:

Perform the above inspection before removing the sensor and connector.

NG → REPAIR OR REPLACE HARNESS OR CONNECTOR

OK

2	READ VALUE OF DATA LIST (FRONT SPEED SENSOR)

BC

(a) Connect the intelligent tester to the DLC3.
(b) Turn the ignition switch on.
(c) Turn the tester on.
(d) Read the wheel speed value using the intelligent tester. Select the following menu items: DIAGNOSIS / OBD/ MOBD / select vehicle / ABS/VSC / DATA LIST.
(e) Select the item "FR (FL) Wheel Speed" in the DATA LIST and read the value displayed on the intelligent tester.

DATA LIST: ABS/VSC

Item (Display)	Measurement Item / Range (Display)	Normal Condition	Diagnostic Note
WHEEL SPD FR	Wheel speed sensor (FR) reading : min.: 0 mph (0 km/h), max.: 202 mph (326 km/h)	Actual wheel speed	Similar to speed indicated on speedometer
WHEEL SPD FL	Wheel speed sensor (FL) reading : min.: 0 mph (0 km/h), max.: 202 mph (326 km/h)	Actual wheel speed	Similar to speed indicated on speedometer

(f) Check that there is no significant difference between the speed value displayed on the intelligent tester and the speed value displayed on the speedometer when driving the vehicle.
OK:
There is almost no difference in the displayed speed values.
HINT:
There is a tolerance of +- 10% in the speedometer indication.

NG → Go to step 5

OK

3	PERFORM TEST MODE INSPECTION (SIGNAL CHECK)

(a) Perform a TEST MODE inspection and check for DTCs (See page BC-28).
OK:
No DTC output.

NG → REPAIR OR REPLACE HARNESS OR CONNECTOR

OK

4	RECONFIRM DTC

(a) Clear the DTC(s) (See pageBC-45).

(b) Start the engine.
(c) Drive the vehicle at a speed of 12 mph (20 km/h) or more for at least 60 seconds.
(d) Check if the same DTC(s) is output (See page BC-45).

Result

BC

Result	Proceed to
DTC not output	A
DTC output	B

B → **Go to step 11**

A

END

5 CHECK FRONT SPEED SENSOR INSTALLATION

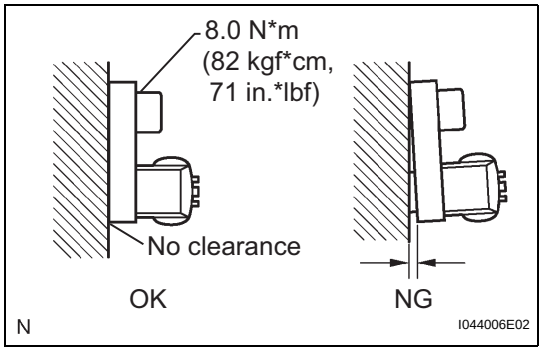

(a) Check that the speed sensor installation bolt is tightened properly.
OK:
The installation bolt is tightened properly.
Torque: 8.0 N*m (82 kgf*cm, 72 in.*lbf)

NG → **TIGHTEN BOLT PROPERLY**

OK

6 CHECK FRONT SPEED SENSOR

(a) Visually check the speed sensor for deformation and damage.
OK:
No scratches or foreign matter on the speed sensor tip.
No deformation or damage.
There is no gap between the sensor and steering knuckle.

NG → **REPLACE FRONT SPEED SENSOR**

OK

7 INSPECT SKID CONTROL SENSOR WIRE

Skid Control Sensor Wire:

Sensor Side Connector:



Vehicle Side Connector:

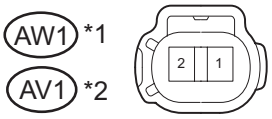

C135284E01

(a) Disconnect the skid control sensor wire.
(b) Measure the resistance.

Standard resistance (LH)

Tester Connection	Specified Condition
W1-1 - AW1-1	Below 1 Ω
W1-1 - AW1-2	10 kΩ or higher
W1-1 - Body ground	10 kΩ or higher
W1-2 - AW1-1	10 kΩ or higher
W1-2 - AW1-2	Below 1 Ω
W1-2 - Body ground	10 kΩ or higher

Standard resistance (RH)

Tester Connection	Specified Condition
V1-1 - AV1-1	Below 1 Ω
V1-1 - AV1-2	10 kΩ or higher
V1-1 - Body ground	10 kΩ or higher
V1-2 - AV1-1	10 kΩ or higher
V1-2 - AV1-2	Below 1 Ω
V1-2 - Body ground	10 kΩ or higher

NG → REPLACE SKID CONTROL SENSOR WIRE

OK

8 CHECK HARNESS AND CONNECTOR (SKID CONTROL ECU - FRONT SPEED SENSOR)

Skid Control ECU (harness side connector): A4

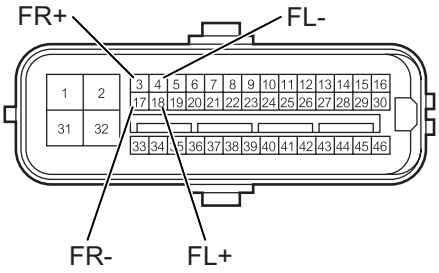

Front Speed Sensor (harness side connector):

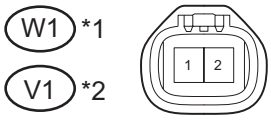

C138455E01

(a) Disconnect the skid control ECU connector and the front speed sensor connector.
(b) Measure the resistance.

Standard resistance (LH)

Tester Connection	Specified Condition
A4-18 (FL+) - W1-2	Below 1 Ω
A4-18 (FL+) - Body ground	10 kΩ or higher
A4-4 (FL-) - W1-1	Below 1 Ω
A4-4 (FL-) - Body ground	10 kΩ or higher

Standard resistance (RH)

Tester Connection	Specified Condition
A4-3 (FR+) - V1-2	Below 1 Ω
A4-3 (FR+) - Body ground	10 kΩ or higher
A4-17 (FR-) - V1-1	Below 1 Ω
A4-17 (FR-) - V1-1	10 kΩ or higher

NG → REPAIR OR REPLACE HARNESS OR CONNECTOR

OK

9	INSPECT FRONT SPEED SENSOR (INPUT VOLTAGE)

BC

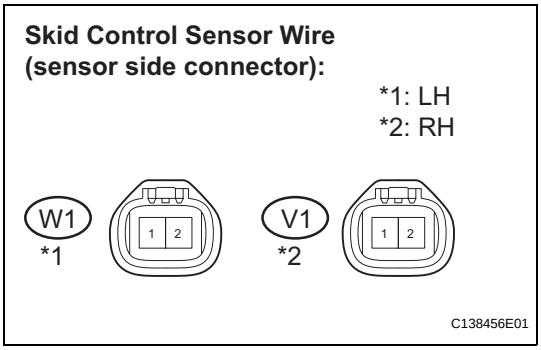

(a) Disconnect the speed sensor connector.
(b) Turn the ignition switch on.
(c) Measure the voltage.

Standard voltage (LH)

Tester Connection	Specified Condition
W1-2 - Body ground	5.7 to 17.3 V

Standard voltage (RH)

Tester Connection	Specified Condition
V1-2 - Body ground	5.7 to 17.3 V

NG → REPLACE MASTER CYLINDER SOLENOID

OK

10	RECONFIRM DTC

(a) Clear the DTC(s) (See page BC-45).
(b) Start the engine.
(c) Drive the vehicle at a speed of 12 mph (20 km/h) or more for at least 60 seconds.
(d) Check if the same DTC(s) is output (See page BC-45).

Result

Result	Proceed to
DTC output	A
DTC not output	B

B → END

A

11	REPLACE FRONT SPEED SENSOR

(a) Replace the front speed sensor.

NEXT

12	RECONFIRM DTC

(a) Clear the DTC(s) (See page BC-45).
(b) Start the engine.
(c) Drive the vehicle at a speed of 12 mph (20 km/h) or more for at least 60 seconds.
(d) Check if the same DTC(s) is output (See page BC-45).

Result

Result	Proceed to
DTC output	A
DTC not output	B

B → **END**

A

REPLACE MASTER CYLINDER SOLENOID

DTC	C0210/33	Rear Speed Sensor RH Circuit
DTC	C0215/34	Rear Speed Sensor LH Circuit
DTC	C1238/38	Foreign Object is Attached on Tip of Rear Speed Sensor RH
DTC	C1239/39	Foreign Object is Attached on Tip of Rear Speed Sensor LH
DTC	C1273/73	Low Output Signal of Rear Speed Sensor RH (Test Mode DTC)
DTC	C1274/74	Low Output Signal of Rear Speed Sensor LH (Test Mode DTC)
DTC	C1277/77	Abnormal Change in Output Signal of Rear Speed Sensor RH (Test Mode DTC)
DTC	C1278/78	Abnormal Change in Output Signal of Rear Speed Sensor LH (Test Mode DTC)

DESCRIPTION

Refer to DTC C0200/31 (See page BC-59).

DTC No.	DTC Detecting Conditions	Trouble Areas
C0210/33 C0215/34	When any of following conditions detected: 1. At vehicle speed of 6 mph (10 km/h) or more, open or short in sensor signal circuit continues for 1 second or more. 2. Momentary interruption of sensor signal from abnormal wheel occurs 255 times or more. 3. Open in speed sensor signal circuit continues for 0.5 seconds or more. 4. With IG1 terminal voltage 9.5 V or more, sensor power supply voltage decreases for 0.5 seconds or more. 5. When vehicle driven at speed of more than 10 km/h (6 mph), one of wheel speeds below one-seventh of other wheel speeds for 15 seconds or more.	• Rear speed sensor • Rear speed sensor circuit • Sensor installation • Skid control sensor wire • Master cylinder solenoid (skid control ECU)
C1238/38 C1239/39	When either of following conditions (1 or 2) detected: 1. At vehicle speed of 12 mph (20 km/h) or more, noise in speed sensor signal continues for 5 seconds or more. 2. At vehicle speed of 6 mph (10 km/h) or more, noise detected as rotor turns, for 15 seconds or more.	• Rear speed sensor • Rear speed sensor circuit • Master cylinder solenoid (skid control ECU)

DTC No.	DTC Detecting Conditions	Trouble Areas
C1273/73 C1274/74	Detected only during test mode.	• Rear speed sensor • Rear speed sensor circuit • Sensor installation • Skid control sensor wire • Master cylinder solenoid (skid control ECU)
C1277/77 C1278/78	Detected only during test mode.	• Rear speed sensor • Rear speed sensor circuit • Master cylinder solenoid (skid control ECU)

WIRING DIAGRAM

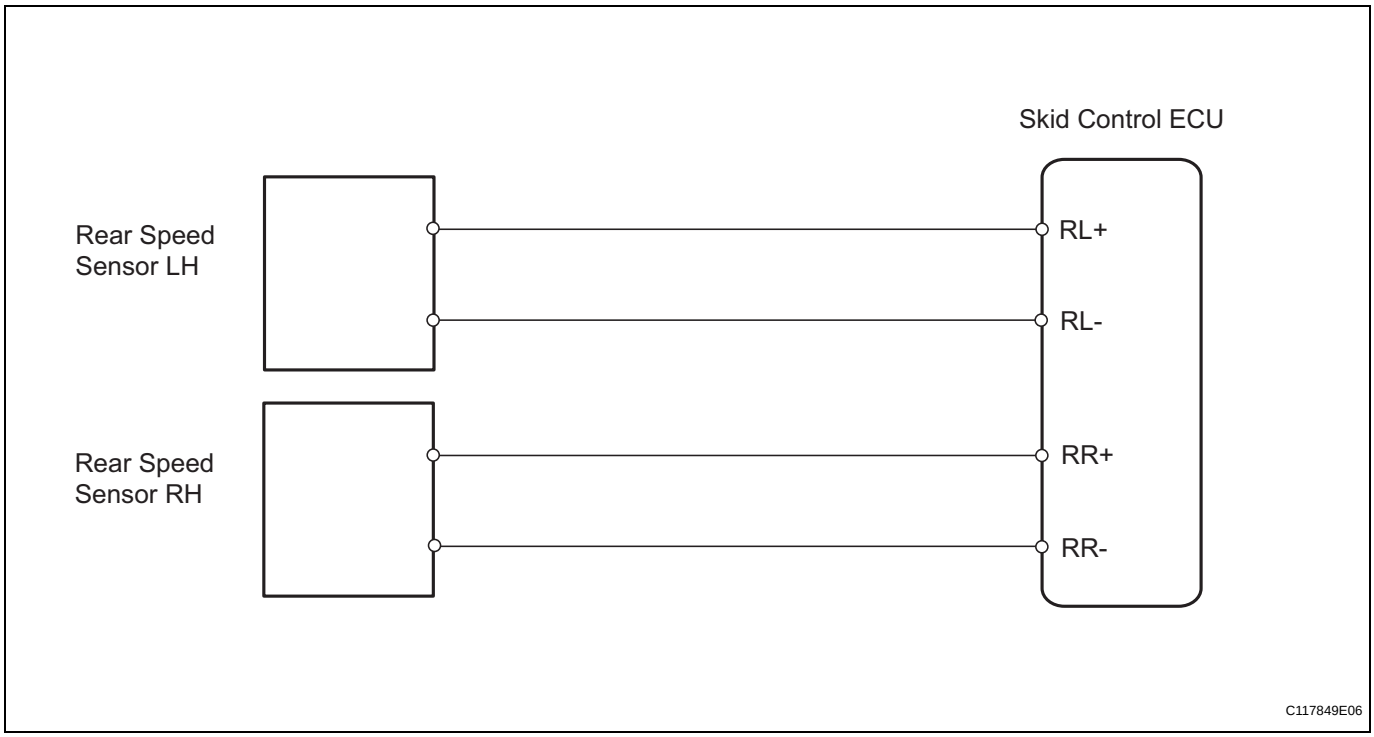

INSPECTION PROCEDURE

NOTICE:

- **When replacing the master cylinder solenoid, perform zero point calibration (See page BC-24).**
- **Check the speed sensor signal in test mode after clearing or replacement (See page BC-28).**

1	CHECK HARNESS AND CONNECTOR (MOMENTARY INTERRUPTION)

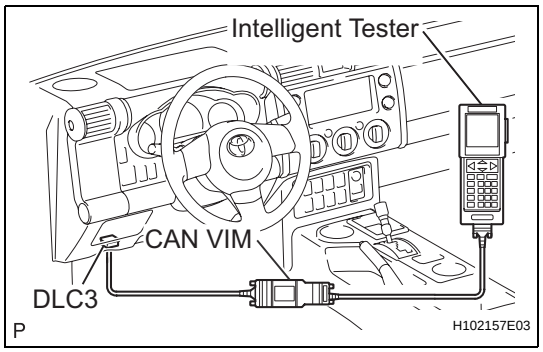

(a) Connect the intelligent tester to the DLC3.
(b) Turn the ignition switch on.
(c) Turn the tester on.
(d) Using the intelligent tester, check for any momentary interruption in the wire harness and connector of the speed sensor.

Select the following menu items: DIAGNOSIS / OBD/ MOBD / select vehicle / ABS/VSC / DATA LIST.

DATA LIST: ABS/VSC

Item (Display)	Measurement Item / Range (Display)	Normal Condition
SPD SEN RR	RR speed sensor open detection / OPN_DET or NORMAL	OPN_DET: Momentary interruption NORMAL: Normal
SPD SEN RL	RL speed sensor open detection / OPN_DET or NORMAL	OPN_DET: Momentary interruption NORMAL: Normal

OK:

There are no momentary interruptions.

HINT:

Perform the above inspection before removing the sensor and connector.

NG → **CHECK AND REPLACE HARNESS OR CONNECTOR**

OK

2	READ VALUE OF DATA LIST

(a) Connect the intelligent tester to the DLC3.
(b) Start the engine and drive the vehicle.
(c) Turn the tester on.
(d) Select the following menu items: DIAGNOSIS / OBD/ MOBD / select vehicle / ABS/VSC / DATA LIST.
(e) Select the item "RR (RL) WHEEL SPD" in the DATA LIST and read the value displayed on the intelligent tester.

DATA LIST: ABS/VSC

Item (Display)	Measurement Item / Range (Display)	Normal Condition
WHEEL SPD RR	Wheel speed sensor (RR) reading : min.: 0 mph (0 km/h), max.: 202 mph (326 km/h)	Similar to speed indicated on speedometer
WHEEL SPD RL	Wheel speed sensor (RL) reading : min.: 0 mph (0 km/h), max.: 202 mph (326 km/h)	Similar to speed indicated on speedometer

(f) Check that there is no significant difference between the speed value displayed on the intelligent tester and the speed value displayed on the speedometer when driving the vehicle.

OK:

There is no significant difference in the displayed speed values.

HINT:

There is a tolerance of +- 10% in the speedometer indication.

NG → **Go to step 5**

OK

3	PERFORM TEST MODE INSPECTION

(a) Perform a TEST MODE inspection and check for DTCs (See page BC-28).

NG → REPAIR OR REPLACE HARNESS OR CONNECTOR

OK

4 RECONFIRM DTC

(a) Clear the DTC(s) (See page BC-45).
(b) Start the engine.
(c) Drive the vehicle at a speed of 12 mph (20 km/h) or more for at least 60 seconds.
(d) Check if the same DTC(s) is output (See page BC-45).

Result

Result	Proceed to
DTC not output	A
DTC output	B

B → Go to step 11

A

END

5 CHECK REAR SPEED SENSOR INSTALLATION

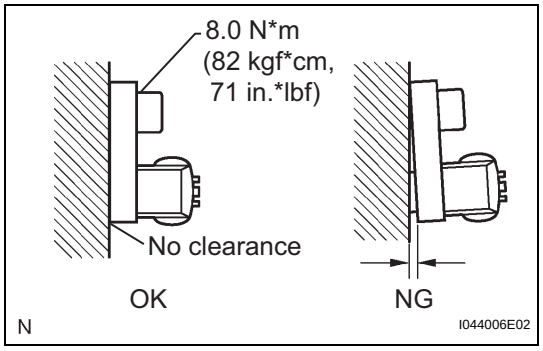

(a) Check that the speed sensor installation bolt is tightened properly.
OK:
The installation bolt is tightened properly.
Torque: 8.0 N*m (82 kgf*cm, 71 in.*lbf)

NG → TIGHTEN BOLT PROPERLY

OK

6 CHECK REAR SPEED SENSOR

(a) Visually check the speed sensor for deformation and damage.
OK:
No deformation or damage.
There is no gap between the sensor and rear axle carrier.

NG → REPLACE REAR SPEED SENSOR

OK

7	INSPECT SKID CONTROL SENSOR WIRE

BC

Skid Control Sensor Wire:

Sensor Side Connector:

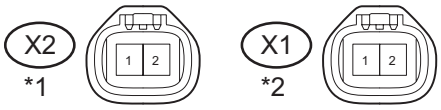

*1: LH
*2: RH

Vehicle Side Connector:

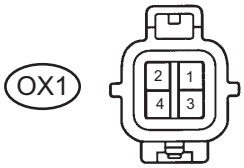

C138457E01

(a) Disconnect the rear speed sensor wire.
(b) Measure the resistance.

Standard resistance (LH)

Tester Connection	Specified Condition
X2-2 - OX1-1	10 kΩ or higher
X2-2 - OX1-2	Below 1 Ω
X2-2 - OX1-3	10 kΩ or higher
X2-2 - OX1-4	10 kΩ or higher
X2-2 - Body ground	10 kΩ or higher
X2-1 - OX1-1	Below 1 Ω
X2-1 - OX1-2	10 kΩ or higher
X2-1 - OX1-3	10 kΩ or higher
X2-1 - OX1-4	10 kΩ or higher
X2-1 - Body ground	10 kΩ or higher

Standard resistance (RH)

Tester Connection	Specified Condition
X1-1 - OX1-1	Below 1 Ω
X1-1 - OX1-2	10 kΩ or higher
X1-1 - OX1-3	10 kΩ or higher
X1-1 - OX1-4	10 kΩ or higher
X1-1 - Body ground	10 kΩ or higher
X1-2 - OX1-1	10 kΩ or higher
X1-2 - OX1-2	Below 1 Ω
X1-2 - OX1-3	10 kΩ or higher
X1-2 - OX1-4	10 kΩ or higher
X1-2 - Body ground	10 kΩ or higher

NG → REPLACE SKID CONTROL SENSOR WIRE

OK

8 CHECK HARNESS AND CONNECTOR (SKID CONTROL ECU - SKID CONTROL SENSOR)

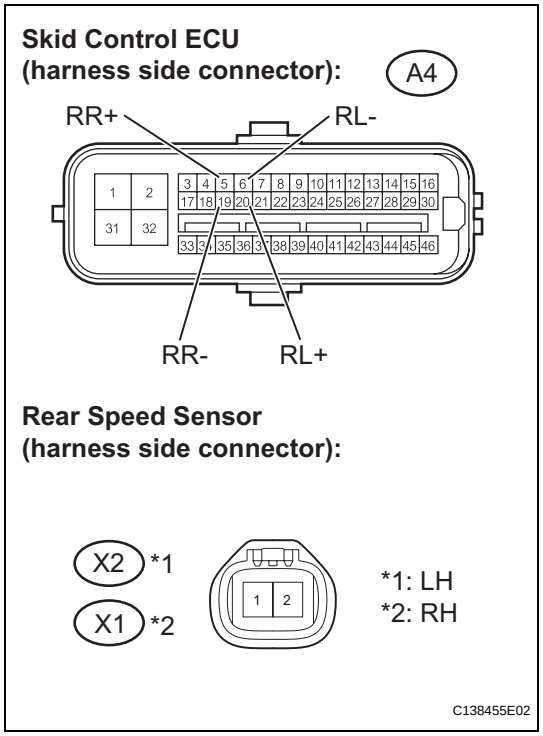

(a) Disconnect the skid control ECU connector.
(b) Disconnect the rear speed sensor connector.
(c) Measure the resistance.

Standard resistance (LH)

Tester Connection	Specified Condition
A4-20 (RL+) - X2-2	Below 1 Ω
A4-6 (RL-) - X2-1	Below 1 Ω

Standard resistance (RH)

Tester Connection	Specified Condition
A4-5 (RR+) - X1-2	Below 1 Ω
A4-19 (RR-) - X1-1	Below 1 Ω

NG → **REPAIR OR REPLACE HARNESS OR CONNECTOR**

OK

9 CHECK SKID CONTROL SENSOR (INPUT VOLTAGE)

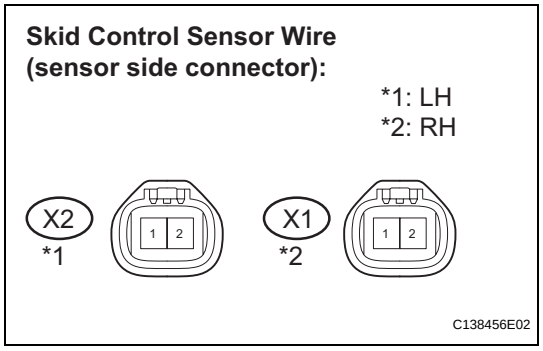

(a) Disconnect the rear speed sensor connector.
(b) Turn the ignition switch on.
(c) Measure the voltage.

Standard voltage (LH)

Tester Connection	Specified Condition
X2-2 - Body ground	5.7 to 17.3 V

Standard voltage (RH)

Tester Connection	Specified Condition
X1-2 - Body ground	5.7 to 17.3 V

NG → **REPLACE MASTER CYLINDER SOLENOID**

OK

10 RECONFIRM DTC

(a) Clear the DTC(s) (See page BC-45).
(b) Start the engine.
(c) Drive the vehicle at a speed of 12 mph (20 km/h) or more for at least 60 seconds.
(d) Check if the same DTC(s) is output (See page BC-45).

Result

Result	Proceed to
DTC output	A
DTC not output	B

BC

B → END

A

11 REPLACE REAR SPEED SENSOR

(a) Replace the rear speed sensor (See page BC-198).

NEXT

12 RECONFIRM DTC

(a) Clear the DTC(s) (See page BC-45).
(b) Start the engine.
(c) Drive the vehicle at a speed of 12 mph (20 km/h) or more for at least 60 seconds.
(d) Check if the same DTC(s) is output (See page BC-45).

Result

Result	Proceed to
DTC output	A
DTC not output	B

B → END

A

REPLACE MASTER CYLINDER SOLENOID

DTC	C0226/21	SFR Solenoid Circuit

DTC	C0236/22	SFL Solenoid Circuit

DTC	C0246/23	SRR Solenoid Circuit

DTC	C0256/24	SRL Solenoid Circuit

DTC	C1225/25	SMC Solenoid Circuit

DTC	C1226/26	SPC Solenoid Circuit

DTC	C1227/27	SRC Solenoid Circuit

DTC	C1228/28	STR Solenoid Circuit

DESCRIPTION

The solenoid goes on when signals are received from the skid control ECU and controls the pressure action on the wheel cylinders thus controlling the braking force.

DTC No.	DTC Detecting Conditions	Trouble Areas
C0226/21	Open or short in SFRH or SFRR circuit continues for 0.05 seconds or more.	Master cylinder solenoid
C0236/22	Open or short in SFLH or SFLR circuit continues for 0.05 seconds or more.	Master cylinder solenoid
C0246/23	Open or short in SRRH or SRRR circuit continues for 0.05 seconds or more.	Master cylinder solenoid
C0256/24	Open or short in SRLH or SRLR circuit continues for 0.05 seconds or more.	Master cylinder solenoid
C1225/25	Open or short in SMCR circuit continues for 0.05 seconds or more.	Master cylinder solenoid
C1226/26	Open or short in SREA circuit continues for 0.05 seconds or more.	Master cylinder solenoid
C1227/27	Open or short in SREC circuit continues for 0.05 seconds or more.	Master cylinder solenoid
C1228/28	Open or short in STR circuit continues for 0.05 seconds or more.	Master cylinder solenoid

INSPECTION PROCEDURE

NOTICE:

When replacing the master cylinder solenoid, perform zero point calibration (See page BC-24).

1	RECONFIRM DTC

HINT:

These DTCs are set when a problem is identified in the master cylinder solenoid.

The solenoid circuit is in the master cylinder solenoid.

Therefore, solenoid circuit inspection and solenoid unit inspection cannot be performed. Be sure to check if the DTCs are output before replacing the master cylinder solenoid.

(a) Clear the DTC (See page BC-45).

(b) Check if the same DTCs are detected.

Result

BC

Result	Proceed to
DTC output	A
DTC not output	B

B → END

A

REPLACE MASTER CYLINDER SOLENOID

DTC	C0278/11	Open in ABS Solenoid Relay Circuit

DTC	C0279/12	Short to B+ in ABS Solenoid Relay Circuit

DESCRIPTION

BC

The solenoid relay supplies power to the ABS solenoid and TRAC solenoid.
After the ignition switch is turned on, the vehicle speed has reached 4 mph (6 km/h) and the solenoid is determined to be normal by the initial check self- diagnosis, the relay switches on. If any open or short circuits are detected, the relay switches off.
These DTCs may be set if the voltage supply to the solenoid relay (+BS) falls below the DTC detection threshold due to the battery or generator outputs being insufficient.

DTC No.	DTC Detecting Condition	Trouble Areas
C0278/11	When either of following conditions detected: 1. Both of following conditions continue for at least 0.2 seconds. (a) IG voltage between 9.5 V and 17 V. (b) Relay contact open when relay ON 2. Both of following conditions continue for at least 0.2 seconds. (a) IG voltage 9.5 V or less when relay ON. (b) Relay contact remains open.	• ABS SOL fuse • +BS terminal circuit • Master cylinder solenoid (skid control ECU)
C0279/12	Following condition continues for at least 0.2 seconds. • Relay contact closed immediately after turning IG switch to ON when relay OFF.	• ABS SOL fuse • +BS terminal circuit • Master cylinder solenoid (skid control ECU)

WIRING DIAGRAM

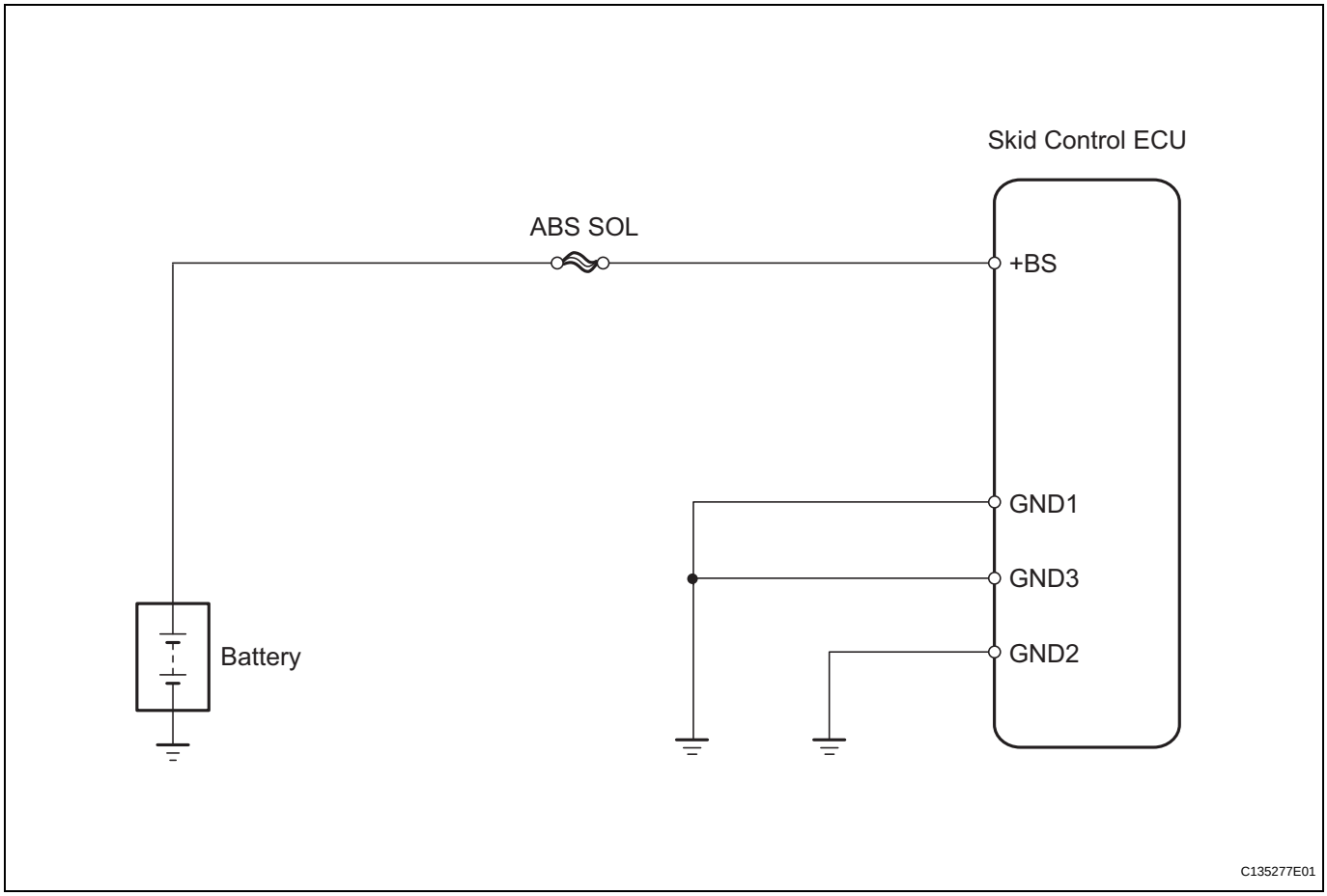

INSPECTION PROCEDURE

NOTICE:

When replacing the master cylinder solenoid, perform zero point calibration (See page BC-24).

BC

1	INSPECT FUSE (ABS SOL)

Engine Room R/B No. 2:

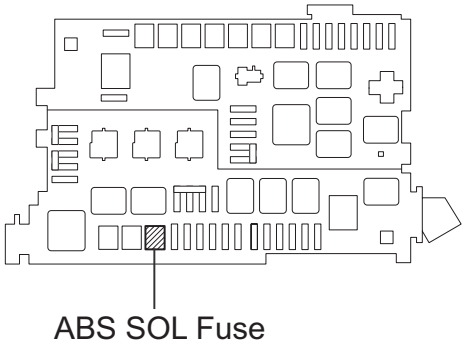

(a) Remove the ABS SOL fuse from the engine room R/B No. 2.
(b) Measure the resistance.
Standard resistance:
Below 1 Ω

NG → **CHECK FOR SHORTS IN ALL HARNESSES AND CONNECTORS CONNECTED TO FUSE AND REPLACE FUSE**

OK

2	CHECK SKID CONTROL ECU TERMINAL VOLTAGE (+BS)

Skid Control ECU (harness side connector):

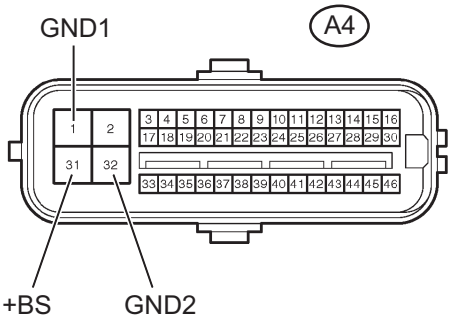

(a) Disconnect the skid control ECU connector.
(b) Measure the voltage.
Standard voltage

Tester Connection	Specified Condition
A4-31 (+BS) - A4-1, 32 (GND1, GND2)	11 to 14 V

NG → **REPAIR OR REPLACE HARNESS OR CONNECTOR**

OK

3	CHECK HARNESS AND CONNECTOR (SKID CONTROL ECU - BODY GROUND)

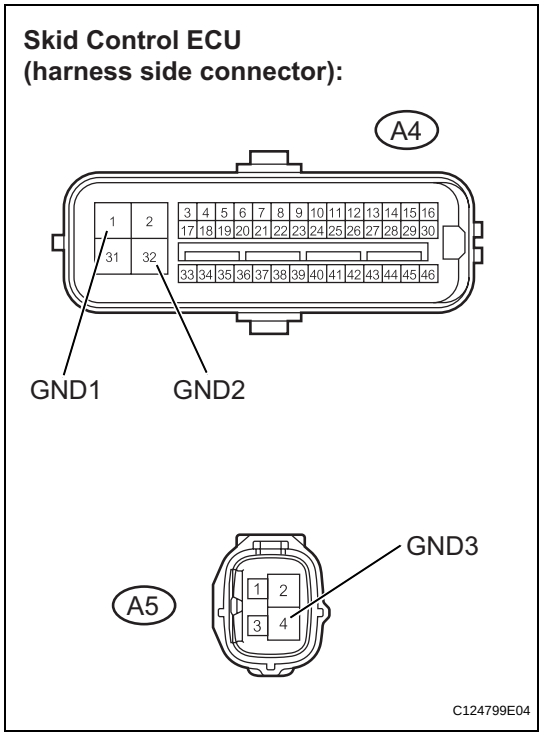

(a) Disconnect the skid control ECU connector.
(b) Measure the resistance.

Standard resistance

Tester Connection	Specified Condition
A4-1, 32 (GND1, GND2) - Body ground	Below 1 Ω
A5-4 (GND3) - Body ground	Below 1 Ω

NG → **REPAIR OR REPLACE HARNESS OR CONNECTOR**

OK

4	RECONFIRM DTC

(a) Clear the DTC(s) (See page BC-45).
(b) Check if the same DTC(s) is output (See page BC-45).

B → **END**

OK

REPLACE MASTER CYLINDER SOLENOID

DTC	C0371/71	Yaw Rate Sensor (Test Mode DTC)
DTC	C1232/32	Stuck in Deceleration Sensor
DTC	C1234/34	Yaw Rate Sensor Malfunction
DTC	C1243/43	Deceleration Sensor Stuck Malfunction
DTC	C1244/44	Open or Short in Deceleration Sensor Circuit
DTC	C1245/45	Deceleration Sensor Output Malfunction
DTC	C1279/79	Deceleration Sensor Output Voltage Malfunction (Test Mode DTC)
DTC	C1381/97	Yaw Rate and / or Acceleration Sensor Power Supply Voltage Malfunction

BC

DESCRIPTION

The skid control ECU receives signals from the yaw rate sensor and deceleration sensor via the CAN communication system.
The deceleration sensor is built into the yaw rate sensor.
If there is trouble in the bus lines between the yaw rate sensor and deceleration sensor and the CAN communication system, DTC U0123/62 (yaw rate sensor communication trouble) and U0124/95 (deceleration sensor communication trouble) are output.

DTC No.	DTC Detecting Conditions	Trouble Areas
C0371/71	Detected only during test mode	• Yaw rate and deceleration sensor • Yaw rate and deceleration sensor circuit • CAN communication system
C1232/32	At vehicle speed of 6 mph (10 km/h) or more, signal from either GL1 or GL2 does not change for 30 seconds or more.	• Yaw rate and deceleration sensor • Yaw rate and deceleration sensor circuit • CAN communication system
C1234/34	Sensor malfunction signal received from yaw rater sensor.	• Yaw rate and deceleration sensor • Yaw rate and deceleration sensor circuit • CAN communication system
C1243/43	Following condition repeats 16 times. • GL1 and GL2 do not change by more than 2LSB when vehicle decelerates from 19 mph (30 km/h) to 0 mph (0 km/h).	• Yaw rate and deceleration sensor • Yaw rate and deceleration sensor circuit • CAN communication system
C1244/44	When either of following (1 or 2) detected: 1. Both of following conditions continue for at least 60 seconds. (a) Vehicle stopped. (b) Difference between GL1 and GL2 does not drop below 0.4 G once it reaches 0.6 G or more. 2. Data malfunction signal received from deceleration sensor.	• Yaw rate and deceleration sensor • Yaw rate and deceleration sensor circuit • CAN communication system
C1245/45	Following condition continues for at least 60 seconds. • Difference between values calculated from deceleration sensor value and vehicle speed exceeds 0.35 G.	• Yaw rate and deceleration sensor • Yaw rate and deceleration sensor circuit • CAN communication system

DTC No.	DTC Detecting Conditions	Trouble Areas
C1279/79	Detected only during test mode	• Yaw rate and deceleration sensor • Yaw rate and deceleration sensor circuit
C1381/97	Deceleration sensor power source malfunction signal received for at least 10 seconds at speed of more than 2 mph (3 km/h).	• Yaw rate and deceleration sensor • Yaw rate and deceleration sensor circuit

WIRING DIAGRAM

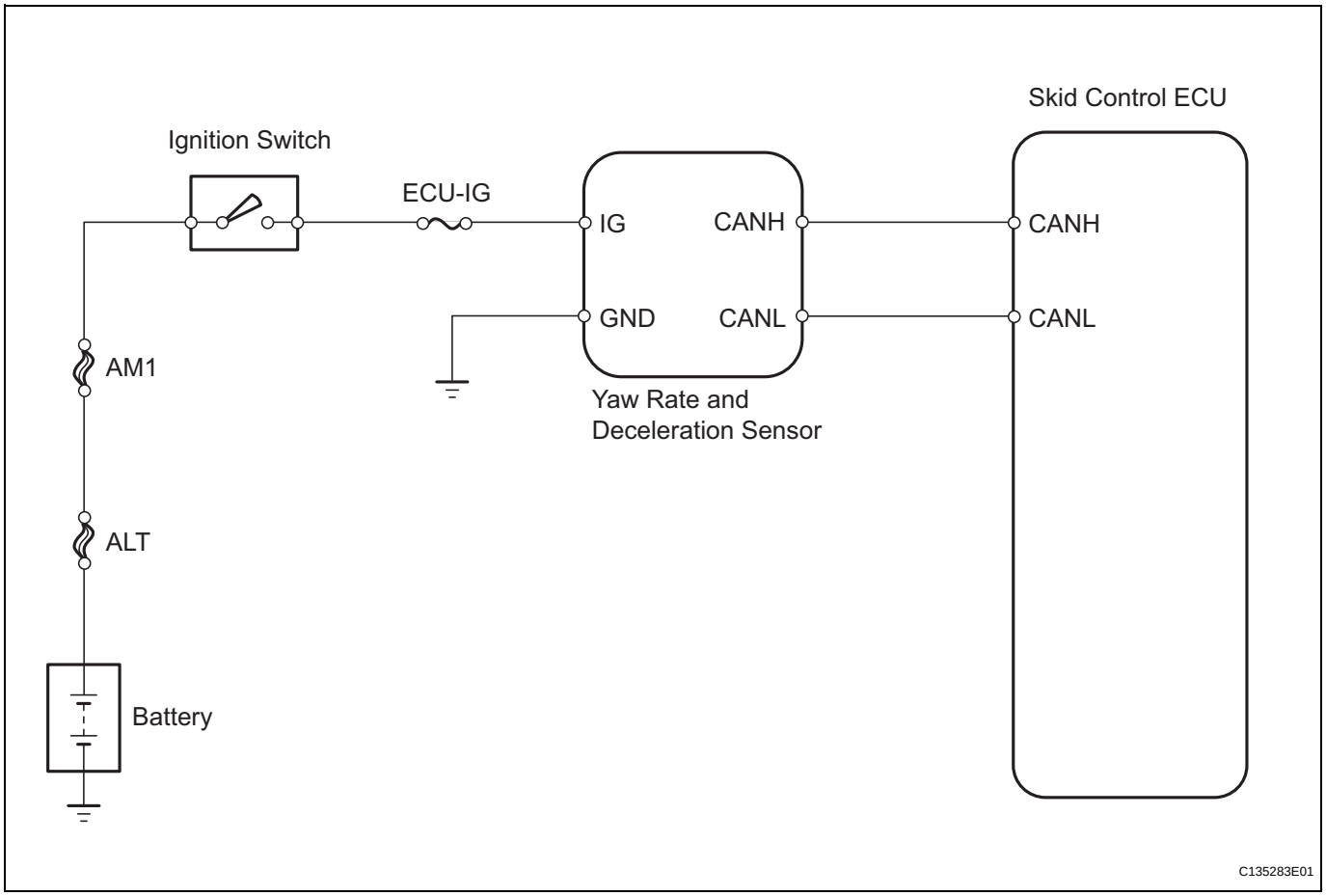

INSPECTION PROCEDURE

NOTICE:

When replacing the yaw rate and deceleration sensor, perform zero point calibration (See page BC-24).

HINT:

When U0073/94, U0123/62, U0124/95 or U0126/63 are output together with C1232/32 or C1234/34, inspect and repair the trouble areas indicated by U0073/94, U0123/62, U0124/95 or U0126/63 first.

1	CHECK DTC

(a) Clear the DTC(s) (See page BC-45).

(b) Check if the DTCs U0073/94, U0123/62, C1210/36 and/or C1336/39 are detected (See page BC-45).

Result

Result	Proceed to
DTC U0073/94, U0123/62, C1210/36 and/or C1336/39 not output	A

Result	Proceed to
DTC U0073/94 and/or U0123/62 output	B
DTC C1210/36 and/or C1336/39 output	C

B → REPAIR CAN COMMUNICATION SYSTEM

C → REPAIR CIRCUITS INDICATED BY OUTPUT DTCS

A

2 INSPECT YAW RATE AND DECELERATION SENSOR

Yaw Rate Sensor (harness side connector):

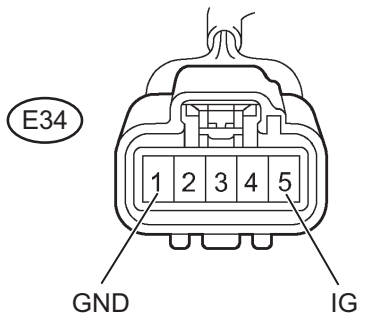

(a) Disconnect the yaw rate and deceleration sensor connector.

(b) Measure the voltage.

Standard voltage

Tester Connection	Condition	Specified Condition
E34-5 (IG) - Body ground	Ignition switch ON	11 to 14 V

(c) Measure the resistance.

Standard resistance

Tester Connection	Condition	Specified Condition
E34-1 (GND) - Body ground	Ignition switch OFF	Below 1 Ω

Result

Result	Proceed to
OK (When troubleshooting in accordance with DTC CHART)	A
OK (When troubleshooting in accordance with PROBLEM SYMPTOMS TABLE)	B
NG	C

B → PROCEED TO NEXT CIRCUIT INSPECTION SHOWN IN PROBLEM SYMPTOMS TABLE

C → REPAIR OR REPLACE HARNESS OR CONNECTOR

A

REPLACE YAW RATE AND DECELERATION SENSOR

DTC	C1201/51	Engine Control System Malfunction

DESCRIPTION

If trouble occurs in the engine control system, the skid control ECU disables TRAC, A-TRAC and VSC controls.

DTC No.	DTC Detecting Conditions	Trouble Areas
C1201/51	Malfunction signal received from ECM	Engine control system

INSPECTION PROCEDURE

1	CHECK DTC (ENGINE CONTROL SYSTEM)

(a) Check if any DTC is recorded for the engine control system (See page ES-38).

Result

Result	Proceed to
DTC output	A
DTC not output	B

B → **REPLACE ECM**

A → **REPAIR ENGINE CONTROL SYSTEM**

DTC	C1202/58	Brake Fluid Level Low / Open Circuit in Brake Fluid Level Warning Switch Circuit

DESCRIPTION

BC

The brake fluid level warning switch sends the appropriate signal to the skid control ECU when the brake fluid level drops.

DTC No.	DTC Detecting Conditions	Trouble Areas
C1202/58	When any of following conditions detected: 1. Fluid level of brake master cylinder reservoir tank stays low for 30 seconds or more when vehicle stops, or for 60 seconds or more when driving. 2. With ECU terminal IG1 voltage 9.5 V to 17.2 V, open circuit for brake fluid level warning switch circuit continues for 2 seconds or more. 3. Fluid level of master cylinder reservoir tank LOW for 4 seconds or 40 seconds after ignition switch turned ON, or for 7 seconds during pump motor operation.	• Brake fluid level • Brake master cylinder reservoir sub-assembly (brake fluid level warning switch) • Brake fluid level warning switch circuit • Master cylinder solenoid (skid control ECU)

WIRING DIAGRAM

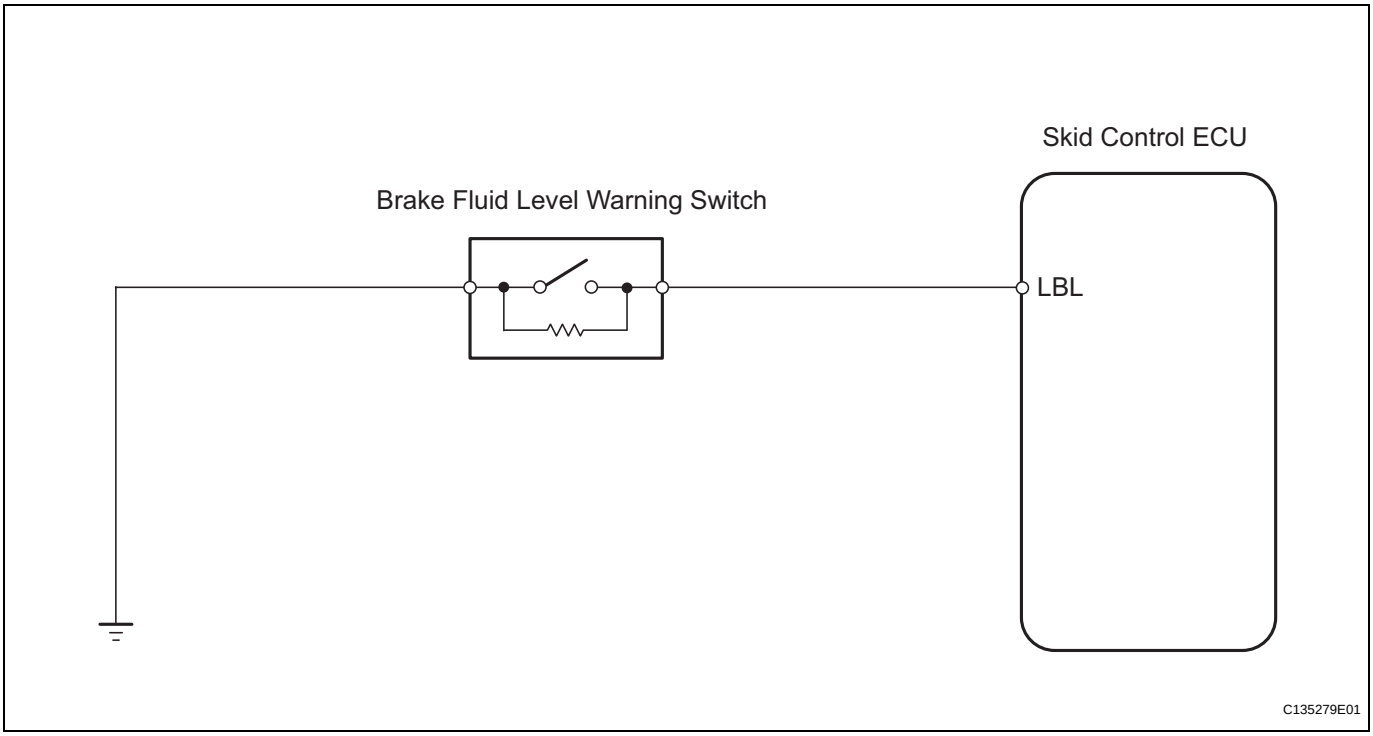

INSPECTION PROCEDURE

NOTICE:

When replacing the master cylinder solenoid, perform zero point calibration (See page BC-24).

HINT:

When C1241/41 and/or C1242/42 is output together with C1202/58, inspect and repair the trouble areas indicated by C1241/41 and/or C1242/42 first.

1	CHECK BRAKE FLUID LEVEL

(a) Turn the ignition switch off.

(b) Depress the brake pedal 20 times or more (until the pedal reaction feels light and pedal stroke becomes longer).
HINT:
When the ignition switch is turned on, brake fluid is sent to the accumulator and the fluid level decreases by approximately 5 mm from the level when the ignition switch is off (normal).
NOTICE:
Do not move the wheels with the ignition switch off.
OK:
Brake fluid level is correct.

NG → **CHECK FOR LEAKAGE AND REPAIR**

OK

2 INSPECT BRAKE FLUID LEVEL WARNING SWITCH

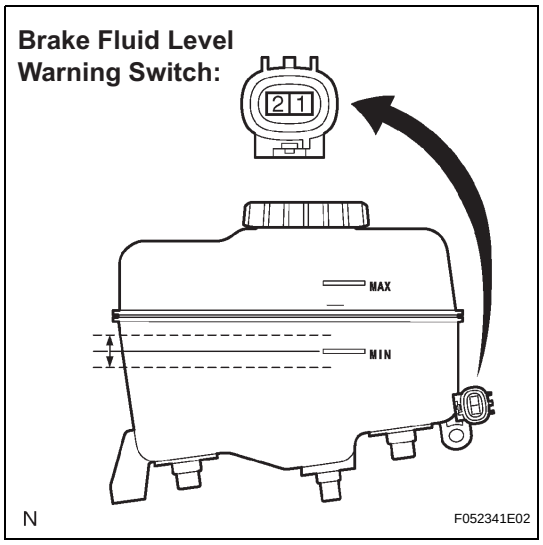

(a) Disconnect the brake fluid level warning switch connector.
(b) Measure the resistance.
Standard resistance

Tester Connection	Condition	Specified Condition
1 - 2	Float UP (Switch OFF)	1.9 k to 2.1 kΩ
1 - 2	Float DOWN (Switch ON)	Below 1 Ω

NOTICE:
If there is no problem after finishing the above check, adjust the brake fluid level to the maximum level.

NG → **REPLACE BRAKE MASTER CYLINDER RESERVOIR SUB-ASSEMBLY**

OK

3	CHECK HARNESS AND CONNECTOR (BRAKE FLUID LEVEL WARNING SWITCH - SKID CONTROL ECU)

BC

Skid Control ECU (harness side connector):

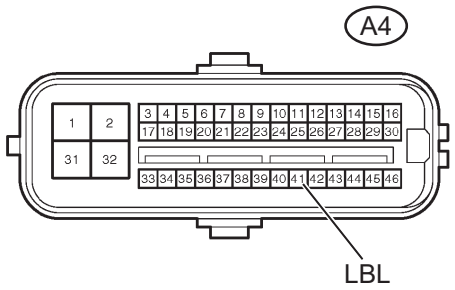

Brake Fluid Level Warning Switch (harness side connector):

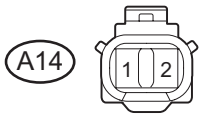

C124798E02

(a) Disconnect the skid control ECU connector.
(b) Disconnect the brake fluid level warning switch connector.
(c) Measure the resistance.
Standard resistance

Tester Connection	Specified Condition
A4-41 (LBL) - A14-2	Below 1 Ω
A4-41 (LBL) - Body ground	1.9 k to 2.1 kΩ

NG → **REPAIR OR REPLACE HARNESS OR CONNECTOR**

OK

4	RECONFIRM DTC

(a) Clear the DTC (See page BC-45).
(b) Check if the same DTC is output (See page BC-45).

Result

Result	Proceed to
DTC output	A
DTC not output	B

B → **END**

A

REPLACE MASTER CYLINDER SOLENOID

DTC	C1203/53	ECM Communication Circuit Malfunction

DESCRIPTION

The circuit sends TRAC, A-TRAC and VSC control information from the skid control ECU to the ECM, and engine control information from the ECM to the skid control ECU via the CAN communication system.

DTC No.	DTC Detecting Condition	Trouble Areas
C1203/53	Information relating to engine drive source or destination stored in ECM does not match that stored in skid control ECU.	• CAN communication system • ECM

INSPECTION PROCEDURE

1	CHECK DTC (CAN COMMUNICATION SYSTEM)

(a) Check if any DTC is recorded for the CAN communication system (See page CA-14).

Result

Result	Proceed to
DTC not output	A
DTC output	B

B → REPAIR CAN COMMUNICATION SYSTEM

A

2	CHECK DTC (ENGINE CONTROL SYSTEM)

(a) Check if any DTC is recorded for the engine control system (See page ES-38).

Result

Result	Proceed to
DTC output	A
DTC not output	B

B → REPLACE ECM

A

REPAIR ENGINE CONTROL SYSTEM

DTC	C1210/36	Zero Point Calibration of Yaw Rate Sensor Undone

DTC	C1336/39	Zero Point Calibration of Acceleration Sensor Undone

BC

DESCRIPTION

The skid control ECU receives signals from the yaw rate sensor and deceleration sensor via the CAN communication system.
The deceleration sensor is built into the yaw rate sensor.
If there is trouble in the bus lines between the yaw rate sensor and deceleration sensor and the CAN communication system, the DTCs U0123/62 (yaw rate sensor communication trouble) and U0124/95 (deceleration sensor communication trouble) are output.
These DTCs are also output when the calibration has not been completed.

DTC No.	DTC Detecting Conditions	Trouble Areas
C1210/36	When either of following 1 or 2 detected: 1. When battery terminal connected, shift lever moved to non-P position (A/T) or parking brake OFF (M/T) within 15 seconds of ECU terminal IG1 initially turned ON. 2. Yaw rate sensor zero point recorded in ECU deleted.	• Yaw rate sensor and deceleration sensor • Zero point calibration not complete • PNP switch circuit (P position) (A/T) • Parking brake switch circuit (M/T) • Master cylinder solenoid (skid control ECU)
C1336/39	When either of following 1 or 2 detected: 1. In TEST mode, shift lever shifted to non-P position (A/T) or parking brake OFF (M/T) 2 seconds after ECU terminal IG1 initially turned ON. 2. Deceleration sensor zero point recorded in ECU deleted.	• Yaw rate sensor and deceleration sensor • Zero point calibration not complete • PNP switch circuit (P position) (A/T) • Parking brake switch circuit (M/T) • Master cylinder solenoid (skid control ECU)

WIRING DIAGRAM

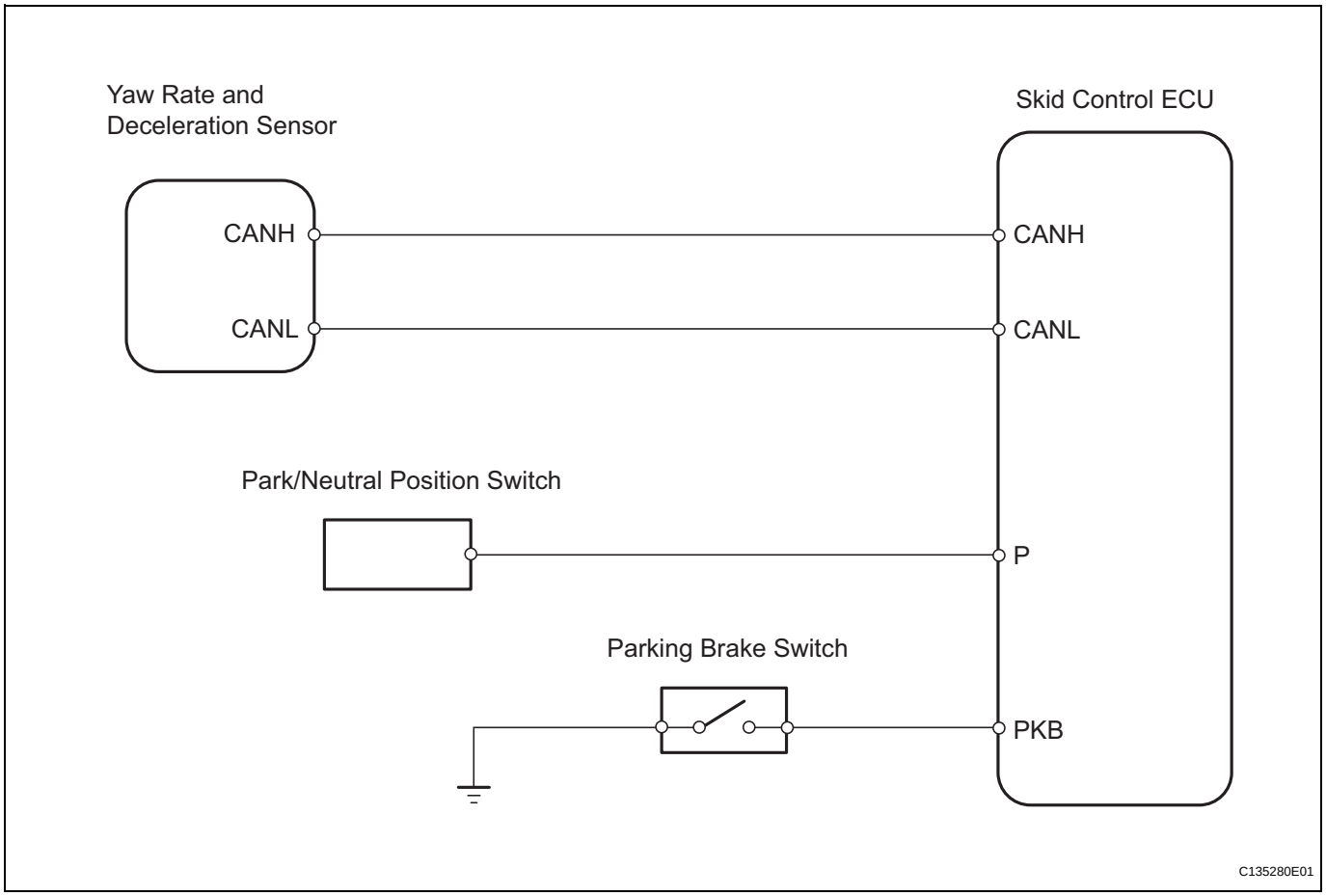

INSPECTION PROCEDURE

HINT:
When U0073/94, U0100/65, U0123/62, U0124/95 or U0126/63 are output accompanied by C1210/36 or C1336/39, inspect and repair the trouble areas indicated by U0073/94, U0100/65,U0123/62, U0124/95 or U0126/63 first.

1	PERFORM YAW RATE AND DECELERATION SENSOR ZERO POINT CALIBRATION

(a) Perform the zero point calibration of the yaw rate sensor and deceleration sensor (See page BC-24).

NEXT

2	RECONFIRM DTC

(a) Clear the DTCs (See page BC-45).
(b) Check if the same DTCs are recorded (See page BC-45).

Result

Result	Proceed to
DTC output	A
DTC not output	B

B → END

A

BC

3	CHECK YAW RATE AND DECELERATION SENSOR INSTALLATION

(a) Check that the yaw rate and deceleration sensor has been installed properly (See page BC-202).
OK:
The sensor is tightened to the specified torque.
The sensor is not tilted.

NG → **INSTALL YAW RATE SENSOR CORRECTLY**

OK

4	CHECK HARNESS AND CONNECTOR (ECU - PARK/NEUTRAL POSITION SWITCH OR PARKING BRAKE SWITCH)

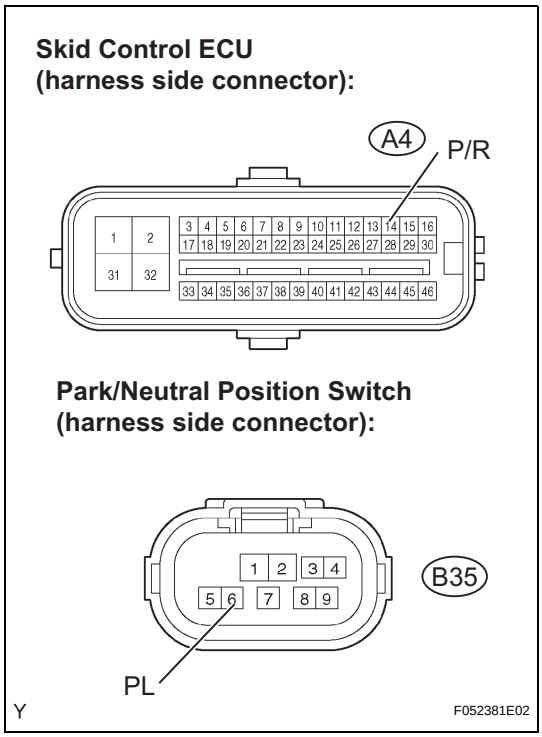

(a) A/T
(1) Disconnect the skid control ECU connector.
(2) Disconnect the Park/Neutral position switch connector.
(3) Measure the resistance.
Standard resistance

Tester Connection	Specified Condition
A4-14 (P/R) - B35-6 (PL)	Below 1 Ω

Skid Control ECU
(harness side connector): A4

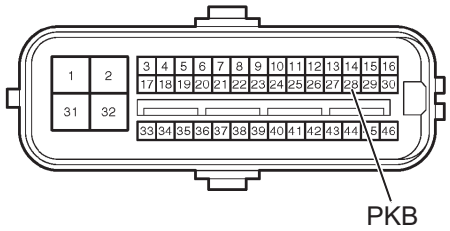

Parking Brake Switch
(harness side connector):

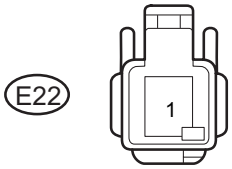

C124797E02

(b) M/T:
(1) Disconnect the skid control ECU connector.
(2) Disconnect the parking brake switch connector.
(3) Measure the resistance.
Standard resistance

Tester Connection	Specified Condition
A4-28 (PKB) - E22-1	Below 1 Ω

BC

NG → **REPAIR OR REPLACE HARNESS OR CONNECTOR**

OK

5 INSPECT PARK/NEUTRAL POSITION SWITCH OR PARKING BRAKE SWITCH

PNP Switch:

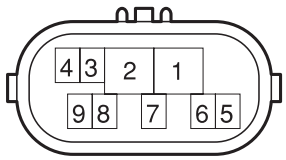

P C124790E04

(a) Inspect the Park/Neutral Position (PNP) switch (for A/T models).
(1) Disconnect the PNP switch connector.
(2) Check the resistance when the transmission gear selector lever is moved to each position.
Standard resistance

Gear Selector Lever Positions	Tester Connections	Specified Conditions
P	2 - 6, 4 - 5	Below 1 Ω
R	1 - 2	Below 1 Ω
N	2 - 9, 4 - 5	Below 1 Ω
D	2 - 7	Below 1 Ω
2	2 - 3	Below 1 Ω
L	2 - 8	Below 1 Ω

Parking Brake Switch:

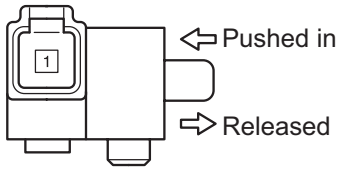

Y C129357E04

(b) Inspect the parking brake switch (for M/T models).
(1) Disconnect the parking brake switch connector.
(2) Measure the resistance.
Standard resistance

Tester Connection	Condition	Specified Condition
1 - Ground part	Parking brake switch ON (Switch pin released)	Below 1 Ω
1 - Ground part	Parking brake switch OFF (Switch pin pushed in)	10 kΩ or higher

NG → REPLACE PARK/NEUTRAL POSITION SWITCH OR PARKING BRAKE SWITCH

OK

BC

6	REPLACE YAW RATE AND DECELERATION SENSOR

(a) Replace the yaw rate and deceleration sensor (See page BC-201).

NEXT

7	PERFORM YAW RATE AND DECELERATION SENSOR ZERO POINT CALIBRATION

(a) Perform the zero point calibration of the yaw rate sensor and deceleration sensor (See page BC-24).

NEXT

8	RECONFIRM DTC

(a) Clear the DTCs (See page BC-45).
(b) Check if the same DTCs are recorded (See page BC-45).

Result

Result	Proceed to
DTC output	A
DTC not output	B

B → END

A

REPLACE MASTER CYLINDER SOLENOID

DTC	C1223/43	ABS Control System Malfunction

DESCRIPTION

This DTC is output when the VSC system detects a malfunction in the ABS system. When DTC C1223/43 is stored, there is no malfunction in the skid control ECU.

DTC No.	DTC Detecting Condition	Trouble Areas
C1223/43	ABS control system abnormal	ABS control system

INSPECTION PROCEDURE

1	CHECK DTC

(a) Clear the DTC (See page BC-45).
(b) Check if the same DTC is recorded (See page BC-45).

Result

Result	Proceed to
DTC output	A
DTC not output	B

B → END

A

REPAIR CIRCUITS INDICATED BY OUTPUT DTCS

DTC	C1231/31	Steering Angle Sensor Circuit Malfunction

DTC	C1290/66	Steering Angle Sensor Zero Point Malfunction

BC

DESCRIPTION

The steering angle sensor signal is sent to the skid control ECU via the CAN communication system. When there is a malfunction in the communication system, the DTC will be detected by the diagnosis function.

DTC No.	DTC Detecting Conditions	Trouble Areas
C1231/31	When ECU IG1 terminal voltage 9.5 V or more, steering angle sensor malfunction signal received.	• Steering angle sensor • Steering angle sensor circuit • CAN communication system • Master cylinder solenoid (skid control ECU)
C1290/66	Steering angle sensor zero point calibration position significantly differs from recorded value.	Steering angle sensor

WIRING DIAGRAM

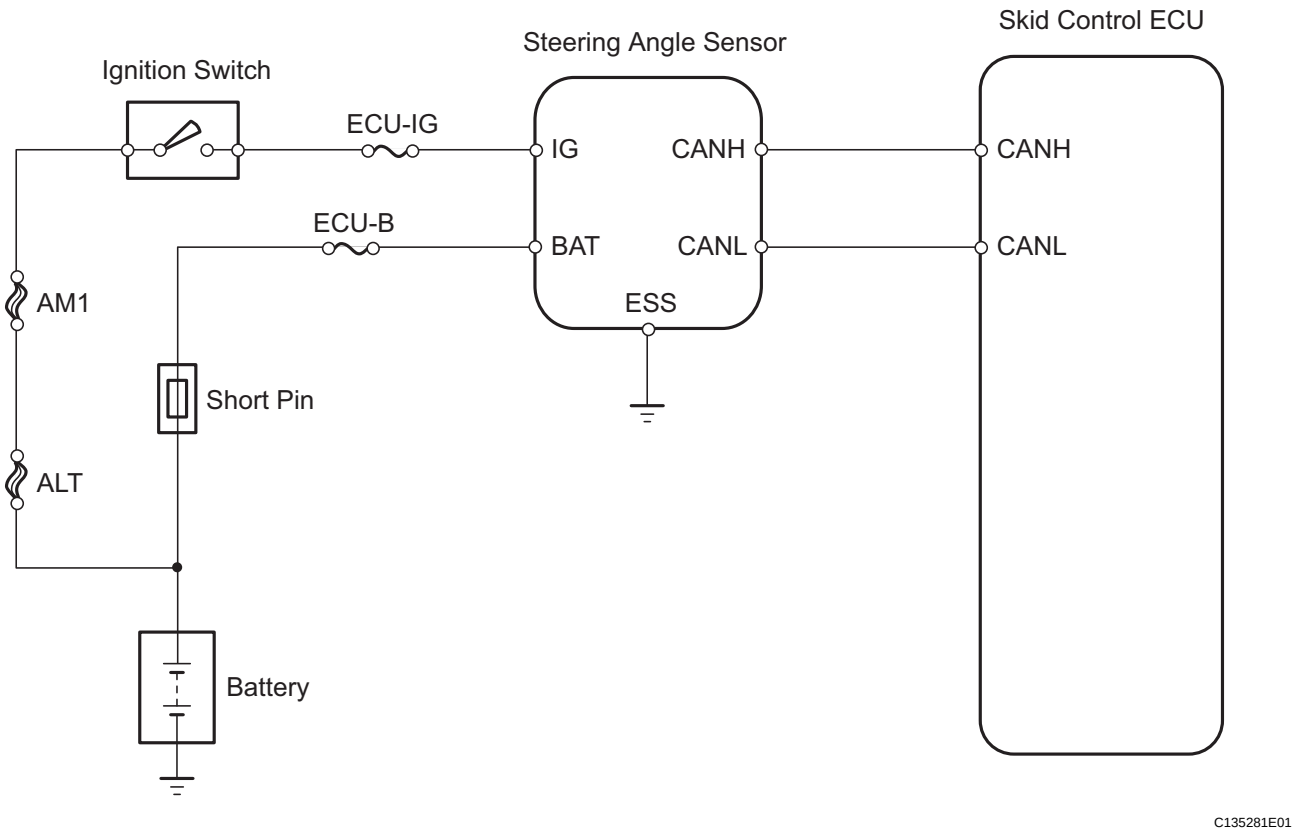

INSPECTION PROCEDURE

NOTICE:

When replacing the master cylinder solenoid, perform zero point calibration (See page BC-24).

HINT:

- When U0073/94, U0123/62, U0124/95 or U0126/63 are output together with C1231/31, inspect and repair the trouble areas indicated by U0073/94, U0123/62, U0124/95 or U0126/63 first.

- When the speed sensor or the yaw rate sensor has trouble, DTCs relating to the steering angle sensor may be output even when the steering angle sensor is normal. When DTCs relating to the speed sensor (C0200/31, C0205/32, C0210/33, C0215/34, C1235/35, C1236/36, C1238/38, C1239/39) or yaw rate (deceleration) sensor (C1232/32, C1234/34, C1243/43, C1244/44, C1245/45, C1381/97) are output together with other DTCs relating to the steering angle sensor, inspect and repair the speed sensor and yaw rate (deceleration) sensor first, and then inspect and repair the steering angle sensor.

1	CHECK CAN COMMUNICATION SYSTEM

(a) Check for CAN communication system DTCs (See page CA-14).

Result

Result	Proceed to
DTC not output	A
DTC output	B

B → REPAIR CAN COMMUNICATION SYSTEM

A

2	CHECK MOMENTARY INTERRUPTION (STEERING ANGLE SENSOR)

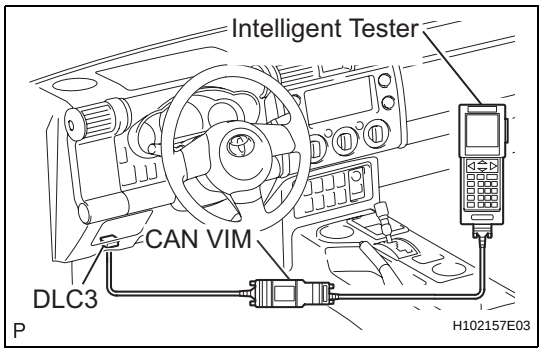

(a) Connect the intelligent tester to the DLC3.
(b) Turn the ignition switch on.
(c) Turn the tester on.
(d) Using a intelligent tester, check for any momentary interruption in the wire harness and connector corresponding to a DTC.
Select the following menu items: DIAGNOSIS / OBD/ MOBD / select vehicle / ABS/VSC / DATA LIST.

DATA LIST: ABS/VSC

Item	Measurement Item / Range (Display)	Normal Condition
STEERING SEN	Steering angle sensor open detection : OPN_DET or NORMAL	OPN_DET: Momentary interruption NORMAL: Normal

OK:
There are no momentary interruptions.

Result

Result	Proceed to
OK (When troubleshooting in accordance with DTC CHART)	A
OK (When troubleshooting in accordance with PROBLEM SYMPTOMS TABLE)	B
NG	C

B → PROCEED TO NEXT CIRCUIT INSPECTION SHOWN IN PROBLEM SYMPTOMS TABLE

C → Go to step 4

A

3	RECONFIRM DTC

BC

(a) Clear the DTCs (See page BC-45).
(b) Check if the same DTCs are recorded (See page BC-45).

Result

Result	Proceed to
DTC output	A
DTC not output	B

B → END

A

REPLACE MASTER CYLINDER SOLENOID

4	CHECK TERMINAL VOLTAGE (STEERING ANGLE SENSOR)

Steering Angle Sensor (harness side connector):

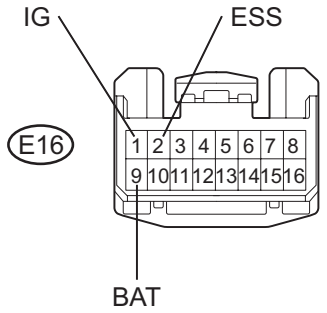

(a) Remove the steering wheel and the column lower cover.
(b) Disconnect the steering angle sensor connector.
(c) Turn the ignition switch on.
(d) Measure the voltage.

Standard voltage

Tester Connection	Specified Condition
E16-1 (IG) - E16-2 (ESS)	11 to 14 V
E16-9 (BAT) - E16-2 (ESS)	11 to 14 V

NG → REPAIR OR REPLACE HARNESS OR CONNECTOR

OK

5	REPLACE STEERING ANGLE SENSOR

(a) Replace the steering angle sensor (See page BC-205).

NEXT

6	RECONFIRM DTC

(a) Clear the DTCs (See page BC-45).
(b) Check if the same DTCs are recorded (See page BC-45).

Result

Result	Proceed to
DTC output	A
DTC not output	B

B → **END**

A

REPLACE MASTER CYLINDER SOLENOID

DTC	C1241/41	Low Battery Positive Voltage

DESCRIPTION

If there is a problem with the master cylinder solenoid (skid control ECU) power supply circuit, the skid control ECU outputs the DTC and prohibits operation under the fail-safe function.

BC

If the voltage supplied to terminal IG1 is not within the DTC detection threshold due to malfunctions in parts such as the battery and generator circuit, this DTC is stored.

DTC No.	DTC Detecting Conditions	Trouble Areas
C1241/41	When either of following conditions detected: 1. Both of following conditions continue for at least 10 seconds. • Vehicle speed more than 2 mph (3 km/m). • IG1 terminal voltage less than 9.5 V. 2. All of following conditions continue for at least 0.2 seconds. • Solenoid relay remains ON. • IG1 terminal voltage less than 9.5 V. • Relay contact open.	• Battery • Charging system • ECU-IG fuse • Power source circuit • Master cylinder solenoid (skid control ECU)

WIRING DIAGRAM

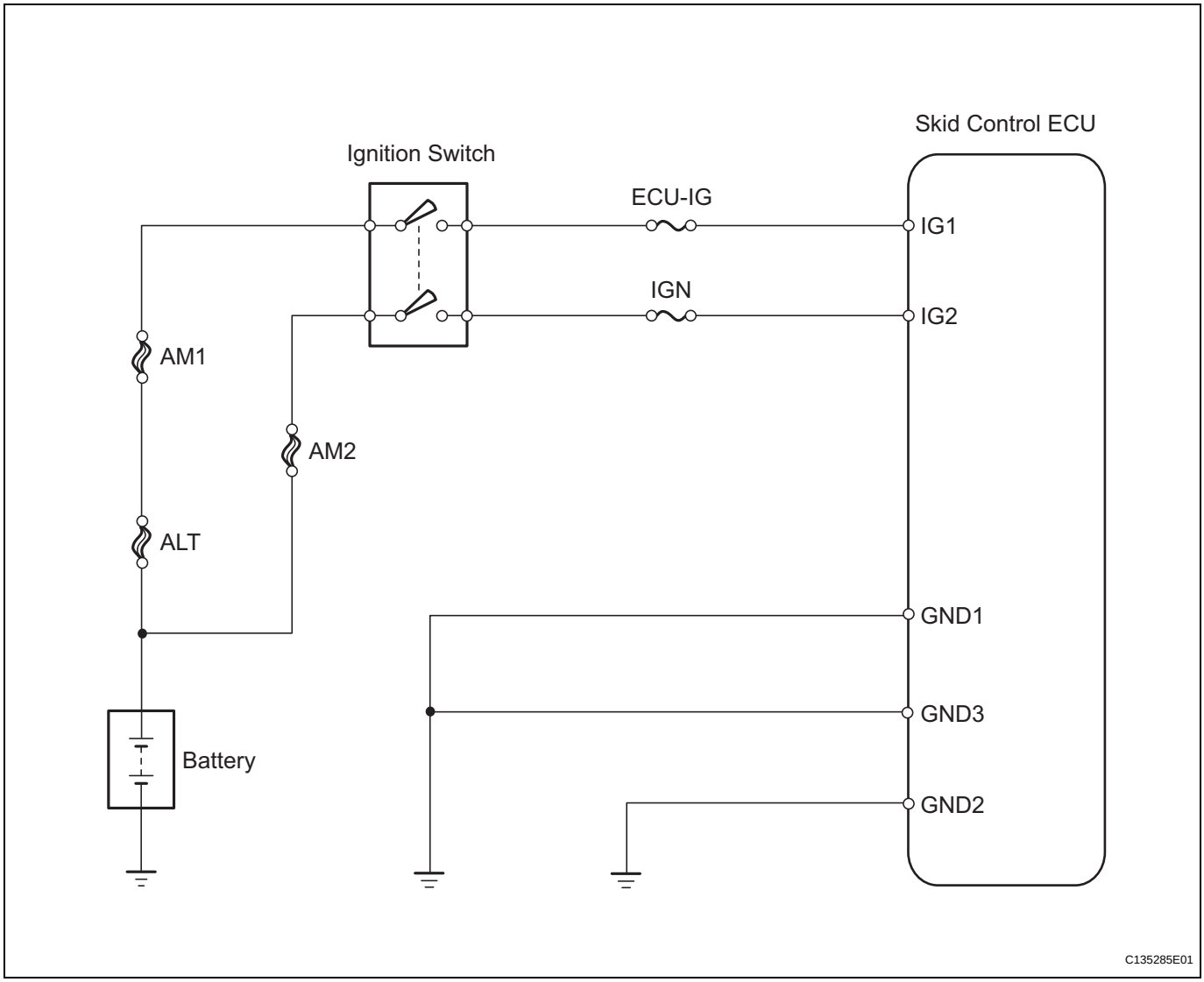

INSPECTION PROCEDURE

NOTICE:

When replacing the master cylinder solenoid, perform zero point calibration (See page BC-24).

1	INSPECT BATTERY

(a) Check the battery voltage.
Standard voltage:
11 to 14 V

NG → **CHECK CHARGING SYSTEM**

OK

2	READ VALUE OF DATA LIST (IG VOLTAGE)

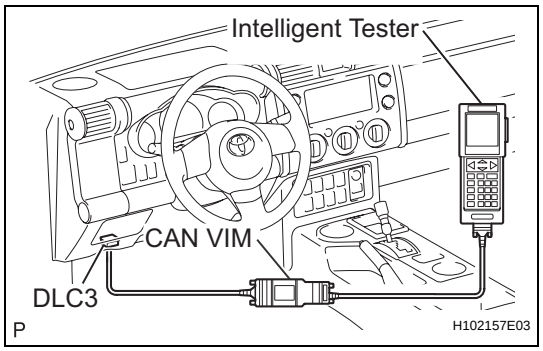

(a) Connect the intelligent tester to the DLC3.
(b) Turn the ignition switch on.
(c) Turn the intelligent tester on.
(d) Select "DATA LIST" mode on the intelligent tester.

DATA LIST: ABS/VSC

Item	Measurement Item : Range (Display)	Normal Condition
IG VOLTAGE	ECU power supply voltage : TOO LOW / NORMAL / TOO HIGH	TOO HIGH: 14 V or more NORMAL: 9.5 V or 14V TOO LOW: Below 9.5 V

(e) Measure the voltage output from the ECU displayed on the intelligent tester.
OK:
"Normal" is displayed.

NG → **Go to step 4**

OK

3	RECONFIRM DTC

(a) Clear the DTCs (See page BC-45).
(b) Drive the vehicle at a speed of 2 mph (3 km/h) or more for 10 seconds or more.
(c) Check if the same DTC is detected (See page BC-45).

Result

Result	Proceed to
DTC output	A
DTC not output	B

B → **END**

A

REPLACE MASTER CYLINDER SOLENOID

BC

4 INSPECT FUSE (ECU-IG)

Driver Side J/B:

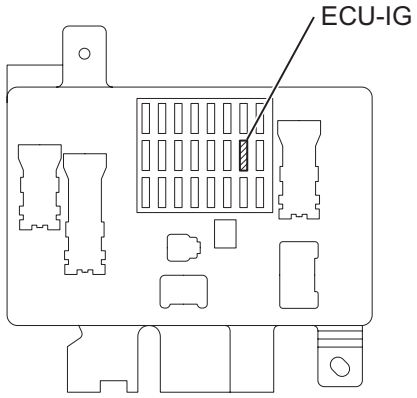

(a) Remove the ECU-IG fuse from the driver side J/B.
(b) Measure the resistance.
Standard resistance:
Below 1 Ω

NG → **CHECK FOR SHORTS IN ALL HARNESSES AND CONNECTORS CONNECTED TO FUSE AND REPLACE FUSE**

OK

5 CHECK HARNESS AND CONNECTOR (GND TERMINAL CONTINUITY)

Skid Control ECU (harness side connector):

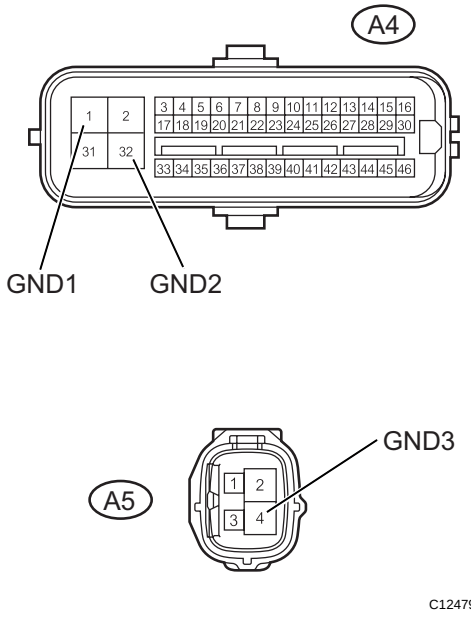

(a) Disconnect the skid control ECU connectors.
(b) Measure the resistance.
Standard resistance

Tester Connection	Specified Condition
A4-1 (GND1) - Body ground	Below 1 Ω
A4-32 (GND2) - Body ground	Below 1 Ω
A5-4 (GND3) - Body ground	Below 1 Ω

NG → **REPAIR OR REPLACE HARNESS OR CONNECTOR**

OK

REPLACE MASTER CYLINDER SOLENOID

DTC	C1242/42	IG2 Power Source Circuit

DESCRIPTION

If there is a problem with the master cylinder solenoid (skid control ECU) power supply circuit, the skid control ECU outputs the DTC and prohibits operation under the fail-safe function.
If the voltage supplied to terminal IG2 is not within the DTC detection threshold due to malfunctions in parts such as the battery and generator circuit, this DTC is stored.

BC

DTC No.	DTC Detecting Conditions	Trouble Areas
C1242/42	Vehicle speed 2 mph (3 km/h) or more and voltage of skid control ECU terminal IG2 remains at below 6.5 for more than 7 seconds.	• Battery • Charging system • IGN fuse • Power source circuit • Master cylinder solenoid (skid control ECU)

WIRING DIAGRAM

See page BC-97.

INSPECTION PROCEDURE

NOTICE:
When replacing the master cylinder solenoid, perform zero point calibration (See page BC-24).

1	CHECK BATTERY VOLTAGE

(a) Check the battery voltage.
Standard voltage:
11 to 14 V

NG → **CHECK CHARGING SYSTEM**

OK

2	CHECK SKID CONTROL ECU TERMINAL VOLTAGE (IG2)

Skid Control ECU
(harness side connector):

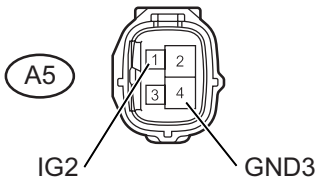

(a) Disconnect the skid control ECU A5 connector.
(b) Measure the voltage.
Standard voltage

Tester Connection	Specified Condition
A5-1 (IG2) - A5-4 (GND3)	11 to 14 V

NG → **REPAIR OR REPLACE HARNESS OR CONNECTOR**

OK

3	INSPECT FUSE (IGN)

Driver Side J/B:

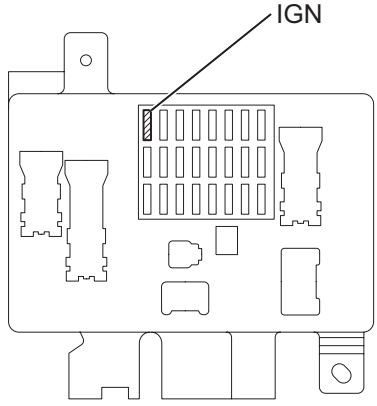

(a) Remove the IGN fuse from the driver side J/B.
(b) Measure the resistance.
Standard resistance:
Below 1 Ω

NG → **CHECK FOR SHORTS IN ALL HARNESSES AND CONNECTORS CONNECTED TO FUSE AND REPLACE FUSE**

OK

4	CHECK HARNESS AND CONNECTOR (GND TERMINAL CONTINUITY)

Skid Control ECU
(harness side connector):

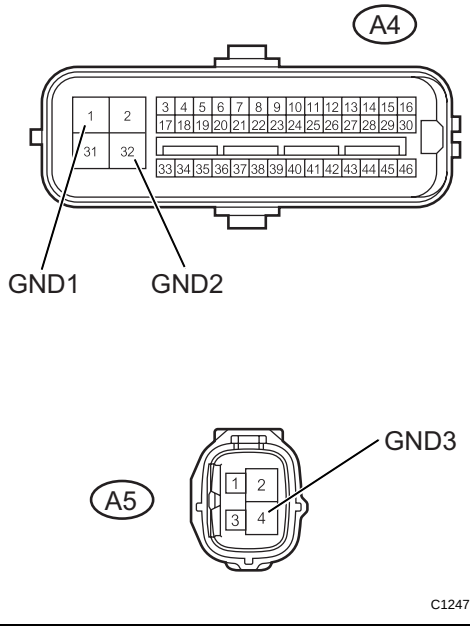

(a) Confirm that the skid control ECU connector and speed sensor connector are properly connected.
(b) Disconnect the skid control ECU connectors.
(c) Inspect both the connector case and the terminal for deformation and corrosion.
OK:
No deformation or corrosion.
(d) Measure the resistance.
Standard resistance

Tester Connection	Specified Condition
A4-1 (GND1) - Body ground	Below 1 Ω
A4-32 (GND2) - Body ground	Below 1 Ω
A5-4 (GND3) - Body ground	Below 1 Ω

NG → **REPAIR OR REPLACE HARNESS OR CONNECTOR**

OK

5	RECONFIRM DTC

(a) Clear the DTC (See page BC-45).

(b) Drive the vehicle at a speed of 2 mph (3 km/h) or more for 7 seconds or more.
(c) Check if the same DTC is output (See page BC-45).

B → **END**

BC

A

REPLACE MASTER CYLINDER SOLENOID

DTC	C1246/46	Master Cylinder Pressure Sensor Malfunction

DTC	C1281/81	Master Cylinder Pressure Sensor Output Malfunction (Test Mode DTC)

DESCRIPTION

The master cylinder pressure sensor is connected to the skid control ECU in the master cylinder solenoid.

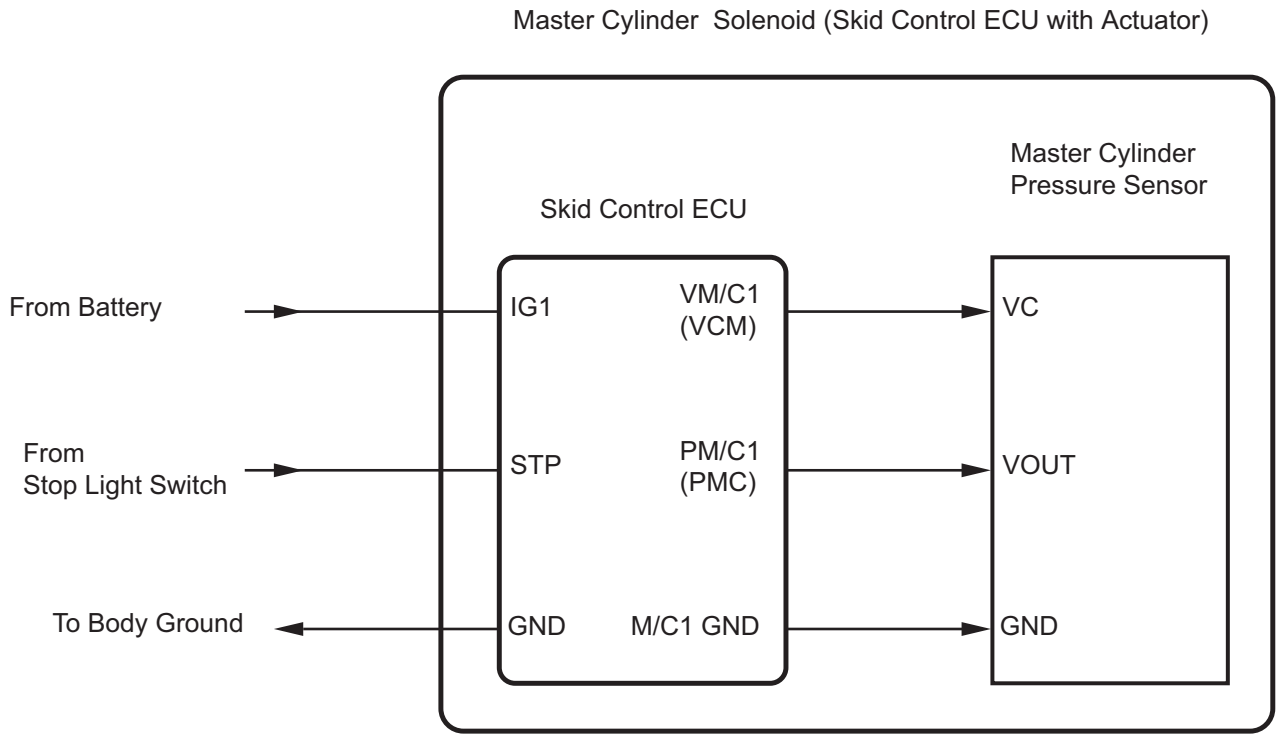

VM/C1 (VCM): Master Cylinder Pressure Sensor Power Supply Output
PM/C1 (PMC): Master Cylinder Pressure Sensor Signal Input
M/C1 GND: Master Cylinder Pressure Sensor Ground

N

C124773E01

DTC No.	DTC Detecting Conditions	Trouble Areas
C1246/46	When any of following conditions detected: 1. Both of following conditions continue for at least 30 seconds. • Vehicle speed more than 4 mph (7 km/h). • PM/C1 terminal voltage does not change by more than 0.005 V once it exceeds 0.86 V. 2. PM/C1 terminal receives noise at least 7 times within 5 seconds. 3. Both of following conditions continue for at least 5 seconds. • Stop switch OFF. • PM/C1 terminal voltage more than 0.86 V or less than 0.3 V. 4. Both of following conditions continue for at least 1.2 seconds. • IG1 terminal voltage between 9.5 V and 17.0 V. • VM/C1 terminal voltage not within 4.4 V and 5.6 V. 5. Both of following conditions continue for at least 1.2 seconds. • VM/C1 terminal voltage between 4.4 V and 5.6 V. • PM/C1 terminal voltage not within 0.14 V and 4.85 V.	• Hydraulic brake booster (master cylinder pressure sensor) • Master cylinder solenoid (skid control ECU) • Stop light switch circuit
C1281/81	Detected only during test mode	• Hydraulic brake booster (master cylinder pressure sensor) • Master cylinder solenoid (skid control ECU) • Stop light switch circuit

INSPECTION PROCEDURE

NOTICE:

When replacing the master cylinder solenoid, perform zero point calibration (See page BC-24).

1	READ VALUE OF DATA LIST (MASTER CYLINDER PRESSURE SENSOR)

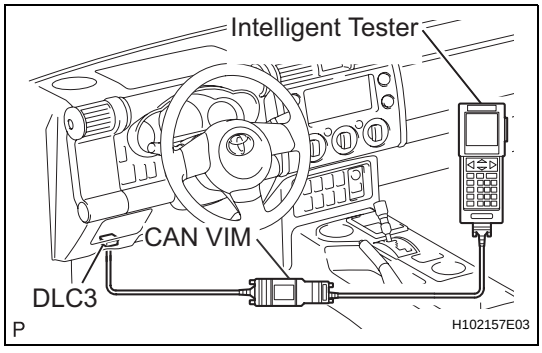

(a) Connect the intelligent tester to the DLC3.
(b) Start the engine.
(c) Turn the intelligent tester on.
(d) Select the DATA LIST mode on the intelligent tester.

DATA LIST: ABS/VSC

Item	Measurement Item / Range (Display)	Normal Condition	Diagnostic Note
MAS CYL PRS 1	Master cylinder pressure sensor 1 reading / min.: 0 V, max.: 5 V	• When brake pedal released: 0.3 to 0.9 V • When stop lights turned on: 0.3 to 0.9 V	Reading increases when brake pedal depressed
MAS CYL PRESS 1	Master cylinder pressure sensor 1 reading / min.: 0 V, max.: 5 V	• When brake pedal released: 0.3 to 0.9 V • When stop lights turned on: 0.3 to 0.9 V	Reading increases when brake pedal depressed

(e) Check that the master cylinder pressure value of the master cylinder pressure sensor displayed on the intelligent tester changes when the brake pedal is depressed.

Result

Result	Proceed to
Master cylinder pressure sensor value normal	A
Master cylinder pressure sensor value changes but not normal	B
Master cylinder pressure sensor value does not change	C

B → Go to step 3

C → REPLACE HYDRAULIC BRAKE BOOSTER

A

2 RECONFIRM DTC

(a) Clear the DTCs (See page BC-45).
(b) Check if the same DTC is detected (See page BC-45).

Result

Result	Proceed to
DTC output	A
DTC not output	B

B → END

A

REPLACE MASTER CYLINDER SOLENOID

3 CHECK BRAKE PEDAL HEIGHT

(a) Check the brake pedal height.
(b) Check the stop light switch installation.

OK:

The brake pedal and stop light switch are normal.

NG → ADJUST BRAKE PEDAL HEIGHT

OK

BC

4 INSPECT SKID CONTROL ECU TERMINAL VOLTAGE (STP TERMINAL)

Skid Control ECU (harness side connector):

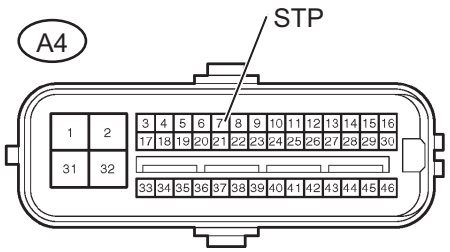

C121700E51

(a) Disconnect the skid control ECU connector.
(b) Measure the voltage.

Standard voltage

Tester Connection	Condition	Specified Condition
A4-7 (STP) - Body ground	Stop light switch ON (Brake pedal depressed)	8 to 14 V
A4-7 (STP) - Body ground	Stop light switch OFF (Brake pedal released)	Below 1.5 V

NG → **REPAIR OR REPLACE HARNESS OR CONNECTOR**

OK

5 RECONFIRM DTC

(a) Clear the DTC (See page BC-45).
(b) Check if the same DTC is detected (See page BC-45).

Result

Result	Proceed to
DTC output	A
DTC not output	B

B → **END**

A

REPLACE MASTER CYLINDER SOLENOID

DTC	C1248/48	Open Circuit in Rear Differential Lock

DESCRIPTION

The 4WD control ECU stimulates the actuator to lock the rear differential in accordance with the rear differential lock switch. The skid control ECU monitors the transfer indicator switch (rear differential lock) and if the rear differential is locked, at which time the rear differential lock indicator light is illuminated, prohibits ABS, TRAC and VSC controls. At the same time, the skid control ECU illuminates the ABS warning light, VSC OFF indicator light and SLIP indicator light.

DTC No.	DTC Detecting Condition	Trouble Areas
C1248/48	At vehicle speed of 31 mph (50 km/h) or more, 3 seconds or more elapse after rear differential changes from free to lock.	• Rear differential lock indicator switch • Rear differential lock indicator switch circuit • Master cylinder solenoid (skid control ECU)

WIRING DIAGRAM

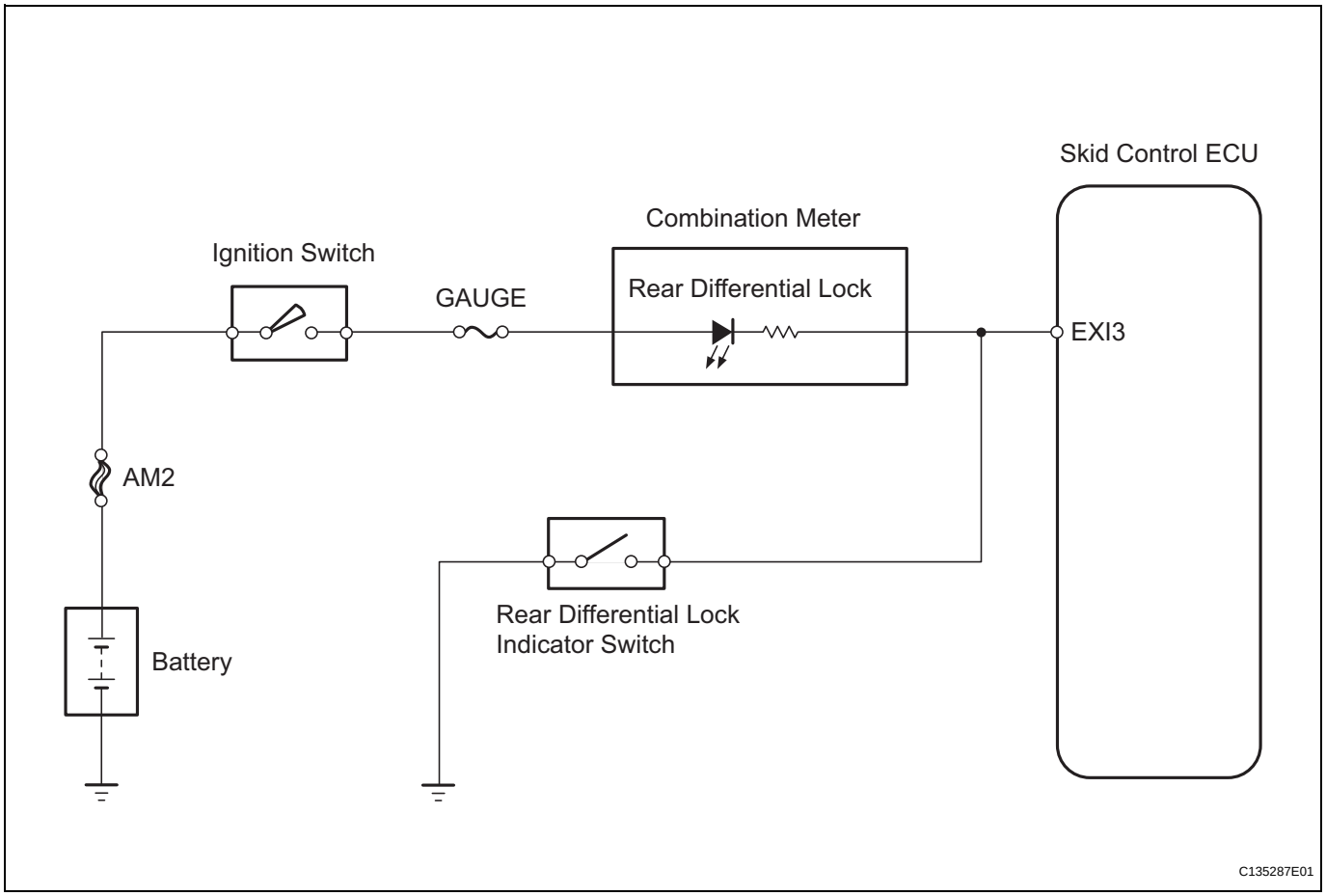

INSPECTION PROCEDURE

NOTICE:

When replacing the master cylinder solenoid, perform zero point calibration (See page BC-24).

BC

1	INSPECT SKID CONTROL ECU TERMINAL VOLTAGE (EXI3)

Skid Control ECU
(harness side connector):

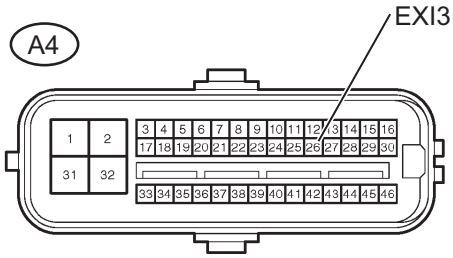

C121700E52

(a) Disconnect the skid control ECU connector.
(b) Turn the ignition switch on.
(c) Measure the voltage.

Standard voltage

Tester Connection	Vehicle Condition	Rear Differential Lock Indicator Light	Specified Condition
A4-26 (EXI3) - Body ground	Rear Differential free	OFF	8 to 14 V
A4-26 (EXI3) - Body ground	Rear Differential locked	ON	1.5 V

NG → Go to step 3

OK

2	RECONFIRM DTC

(a) Clear the DTC (See page BC-45).
(b) Drive the vehicle at 31 mph (50 km/h) or more for 3 seconds or more with the rear differential free.
(c) Check if the same DTC is detected (See page BC-45).

Result

Result	Proceed to
DTC output	A
DTC not output	B

B → END

A

REPLACE MASTER CYLINDER SOLENOID

3 **INSPECT REAR DIFFERENTIAL LOCK INDICATOR SWITCH**

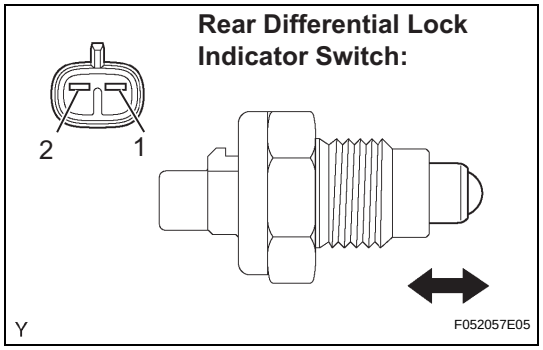

(a) Disconnect the rear differential lock indicator switch connector.
(b) Remove the rear differential lock indicator switch.
(c) Measure the resistance.

Standard resistance

Tester Connection	Condition	Specified Condition
D2-1 - D2-2	Pushed	Below 1 Ω
D2-1 - D2-2	Free	10 kΩ or higher

NG → **REPLACE REAR DIFFERENTIAL LOCK INDICATOR SWITCH**

OK

4 **CHECK HARNESS AND CONNECTOR (SKID CONTROL ECU - REAR DIFFERENTIAL LOCK INDICATOR SWITCH)**

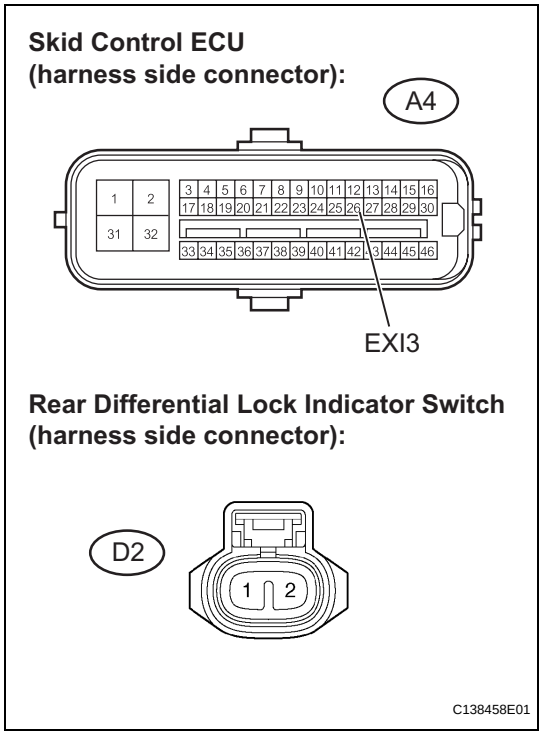

(a) Disconnect the skid control ECU connector.
(b) Disconnect the rear differential lock indicator switch connector.
(c) Measure the resistance.

Standard resistance

Tester Connection	Specified Condition
A4-26 (EXI3) - D2-2	Below 1 Ω
D2-1 - Body ground	10 kΩ or higher

NG → **REPAIR OR REPLACE HARNESS OR CONNECTOR**

OK

REPLACE MASTER CYLINDER SOLENOID

DTC	C1249/49	Open in Stop Light Switch Circuit

DESCRIPTION

The skid control ECU inputs the stop light switch signal and detects the status of the brake operation.

BC

DTC No.	DTC Detecting Condition	Trouble Areas
C1249/49	When ECU terminal IG1 voltage 9.5 V to 17.0 V and ABS non-operational, open in stop light switch circuit continues for 0.3 seconds or more.	• Stop light switch assembly • Stop light switch circuit • Master cylinder solenoid (skid control ECU)

WIRING DIAGRAM

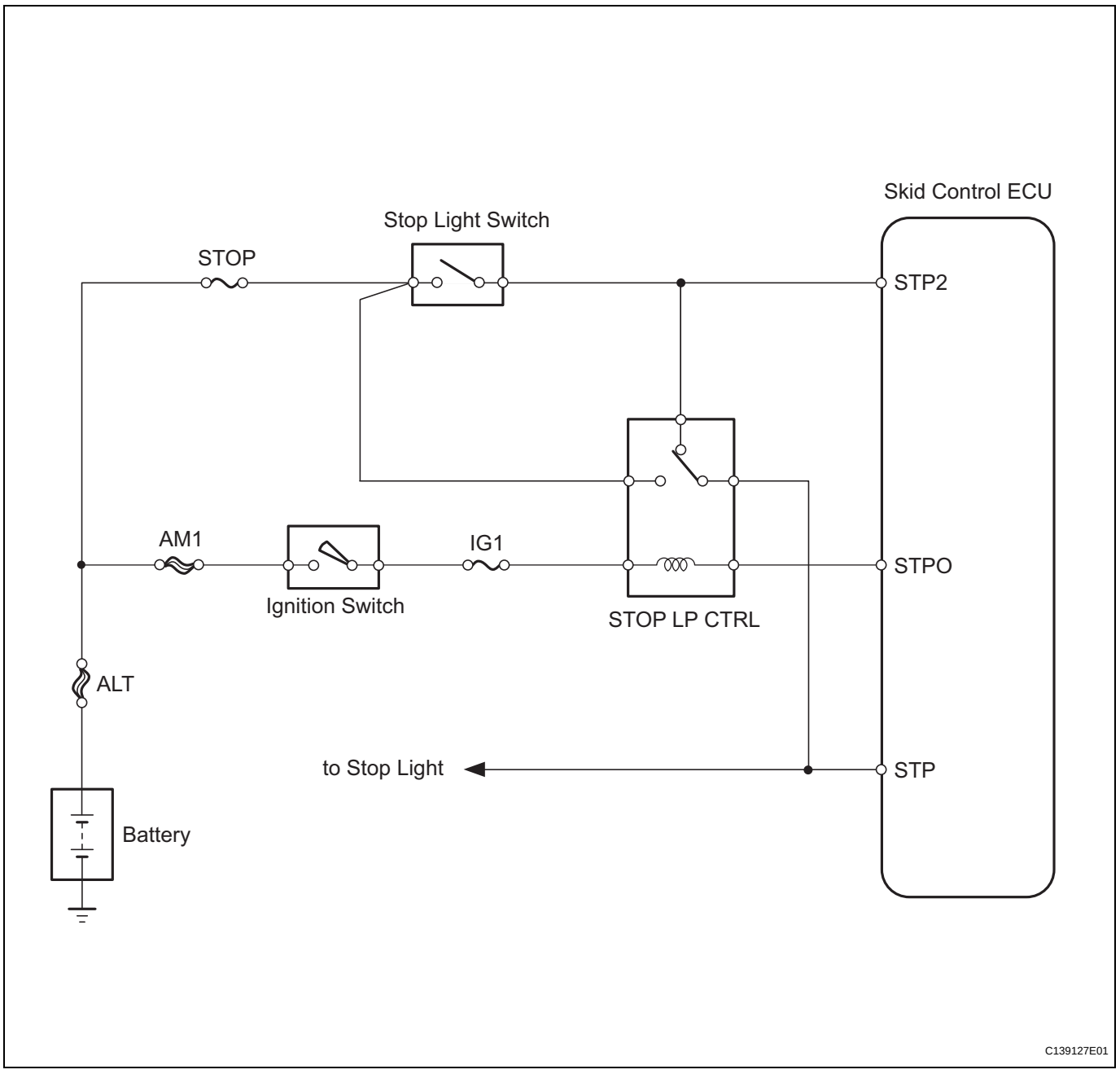

INSPECTION PROCEDURE

NOTICE:

When replacing the master cylinder solenoid, perform zero point calibration (See page BC-24).

1 CHECK STOP LIGHT SWITCH OPERATION

(a) Check that the stop lights come on when the brake pedal is depressed and go off when the brake pedal is released.
OK

Pedal condition	Illumination Condition
Brake pedal depressed	ON
Brake pedal released	OFF

HINT:
Check the stop light bulbs as they may have burnt out.

NG → **Go to step 4**

OK

2 INSPECT SKID CONTROL ECU (STP TERMINAL VOLTAGE)

Skid Control ECU (harness side connector):

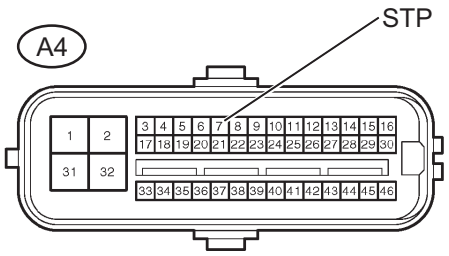

C121700E53

(a) Disconnect the skid control ECU connector.
(b) Measure the voltage.
Standard voltage

Tester Connection	Condition	Specified Condition
A4-7 (STP) - Body ground	Stop light switch ON (Brake pedal depressed)	8 to 14 V
A4-7 (STP) - Body ground	Stop light switch OFF (Brake pedal released)	Below 1.5 V

Result

Result	Proceed to
OK (When troubleshooting in accordance with DTC CHART)	A
OK (When troubleshooting in accordance with PROBLEM SYMPTOMS TABLE)	B
NG	C

B → **PROCEED TO NEXT CIRCUIT INSPECTION SHOWN IN PROBLEM SYMPTOMS TABLE**

C → **REPAIR OR REPLACE HARNESS OR CONNECTOR**

A

3	RECONFIRM DTC

(a) Clear the DTC (See page BC-45).
(b) Check if the same DTC is detected (See page BC-45).

BC

Result

Result	Proceed to
DTC output	A
DTC not output	B

B → END

A

REPLACE MASTER CYLINDER SOLENOID

4	INSPECT STOP LIGHT SWITCH ASSEMBLY

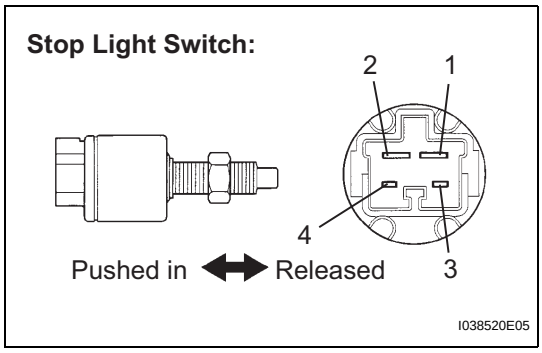

(a) Disconnect the stop light switch connector.
(b) Measure the resistance.

Standard resistance

Tester Connection	Condition	Specified Condition
1 - 2	Switch pin released	Below 1 Ω
3 - 4	Switch pin released	10 kΩ or higher
1 - 2	Switch pin pushed in	10 kΩ or higher
3 - 4	Switch pin pushed in	Below 1 Ω

NG → REPLACE STOP LIGHT SWITCH ASSEMBLY

OK

5 CHECK HARNESS AND CONNECTOR (SKID CONTROL ECU - STOP LIGHT SWITCH)

Skid Control ECU (harness side connector):

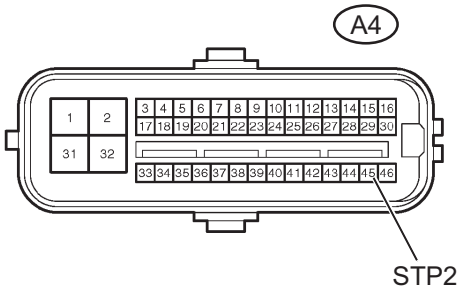

Stop Light Switch (harness side connector):

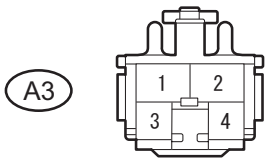

C121702E06

(a) Disconnect the skid control ECU connector.
(b) Disconnect the stop light switch connector.
(c) Measure the resistance.

Standard resistance

Tester Connection	Specified Condition
A4-45 (STP2) - A3-1	Below 1 Ω

NG → **REPAIR OR REPLACE HARNESS OR CONNECTOR**

OK

6 RECONFIRM DTC

(a) Clear the DTC (See page BC-45).
(b) Check if the same DTC is detected (See page BC-45).

Result

Result	Proceed to
DTC output	A
DTC not output	B

B → **END**

A

REPLACE MASTER CYLINDER SOLENOID

DTC	C1251/51	Open in Pump Motor Circuit

DESCRIPTION

The motor relay (semiconductor relay) is built into the master cylinder solenoid and drives the pump motor based on a signal from the skid control ECU.

BC

DTC No.	DTC Detecting Condition	Trouble Areas
C1251/51	Open in motor system circuit (motor input circuit)	• Brake booster pump assembly • Master cylinder solenoid (skid control ECU)

INSPECTION PROCEDURE

NOTICE:

When replacing the master cylinder solenoid, perform zero point calibration (See page BC-24).

HINT:

Remove the hydraulic brake booster before the inspection (See page BR-28).

1	CHECK BRAKE PUMP MOTOR WIRE HARNESS CONNECTION (MT+ / MT-)

(a) Using a screwdriver, remove the 2 plugs from the hydraulic brake booster (See page BR-32).

(b) Check the tightening torque of 2 screws which fasten the wire harness connecting the hydraulic brake booster and brake booster pump (See page BR-36).

Torque: 2.9 N*m (30 kgf*cm, 26 in.*lbf)

NG → **RETIGHTEN SCREWS**

OK

2	CHECK RESISTANCE OF PUMP MOTOR WIRE HARNESS (MT+/MT-)

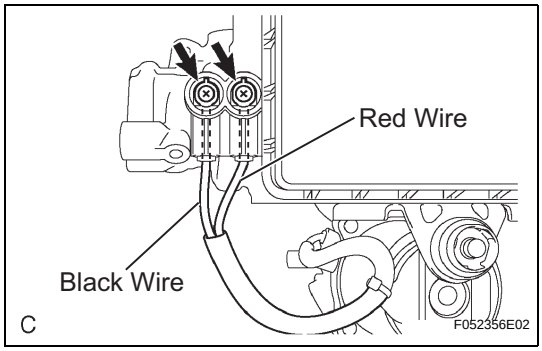

(a) Using a screwdriver, remove the 2 screws and pull the wire harness from the hydraulic brake booster.

(b) Measure the resistance between the red wire (MT+) and black wire (MT-).

Standard resistance:

Below 2 Ω

NG → **REPLACE BRAKE BOOSTER PUMP ASSEMBLY**

OK

3	RECONFIRM DTC

(a) Reassemble the hydraulic brake booster, then reinstall the hydraulic brake booster.

(b) Clear the DTC (See page BC-45).

(c) Check if the same DTC is detected (See page BC-45).

Result

Result	Proceed to
DTC output	A
DTC not output	B

B → END

A

REPLACE MASTER CYLINDER SOLENOID

DTC	C1252/52	Brake Booster Pump Motor on Time Abnormally Long

DESCRIPTION

BC

The motor relay (semiconductor relay) is built into the master cylinder solenoid and drives the pump motor based on a signal from the skid control ECU.

DTC No.	DTC Detecting Condition	Trouble Areas
C1252/52	Motor operates for 3 minutes or more.	• Brake booster pump assembly • Hydraulic brake booster (accumulator pressure sensor) • Master cylinder solenoid (skid control ECU)

INSPECTION PROCEDURE

NOTICE:

When replacing the master cylinder solenoid, perform zero point calibration (See page BC-24).

HINT:

When C1253/53, C1254/54 or C1256/56 is output together with C1252/52, inspect and repair the trouble areas indicated by C1253/53, C1254/54 or C1256/56 first.

1	CHECK HYDRAULIC BRAKE BOOSTER PUMP MOTOR OPERATION

(a) Turn the ignition switch off.
(b) Depress the brake pedal more than 20 times.
(c) Turn the ignition switch on.
(d) Check how the hydraulic brake booster pump motor operates.

Result

Result	Proceed to
Pump motor does not operate	A
Pump motor operates continuously (Does not stop)	B
Pump motor operates intermittently	C
Pump motor operates, then stops	D

B → REPLACE BRAKE BOOSTER PUMP ASSEMBLY

C → Go to step 4

D → Go to step 5

A

2	CHECK BRAKE PUMP MOTOR WIRE HARNESS CONNECTION (MT+ / MT-)

(a) Using a screwdriver, remove the 2 plugs from the hydraulic brake booster (See page BR-32).
(b) Check the tightening torque of 2 screws which fasten the wire harness connecting the hydraulic brake booster and brake booster pump (See page BR-36).

Torque: 2.9 N*m (30 kgf*cm, 26 in.*lbf)

NG → RETIGHTEN SCREWS

OK

3 CHECK RESISTANCE OF PUMP MOTOR WIRE HARNESS (MT+/MT-)

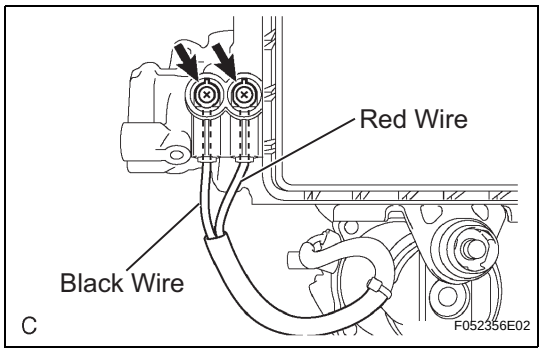

(a) Using a screwdriver, remove the 2 screws and pull the wire harness from the hydraulic brake booster assembly.
(b) Measure the resistance between the red wire (MT+) and black wire (MT-).
Standard resistance:
Below 2 Ω

NG → REPLACE BRAKE BOOSTER PUMP ASSEMBLY

OK

4 READ VALUE OF DATA LIST (ACCUMULATOR PRESSURE SENSOR)

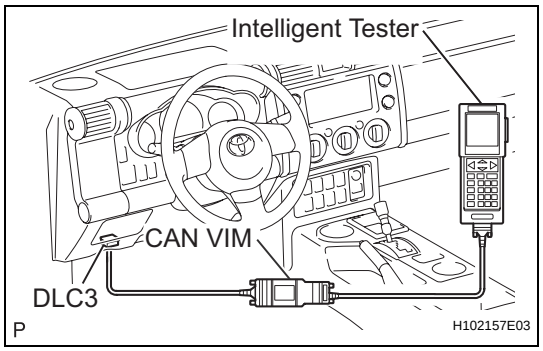

(a) Connect the intelligent tester to the DLC3.
(b) Turn the ignition switch on.
(c) Turn the tester on.
(d) Select the DATA LIST mode on the intelligent tester.

DATA LIST: ABS/VSC

Item	Measurement Item / Range (Display)	Normal Condition	Diagnostic Note
ACC PRESS SENS	Accumulator pressure sensor reading / min.: 0 V, max.: 5 V	3.58 to 5 V	If value constant regardless of pump operation, accumulator pressure sensor malfunction suspected.

(e) Check that the accumulator pressure sensor output is normal.

Result

Result	Proceed to
Output value varies within "Normal Condition" range	A
Output value does not reach "Normal Condition" range	B
Output value constant regardless of pump motor operation	C

B → REPLACE BRAKE BOOSTER PUMP ASSEMBLY

C → REPLACE HYDRAULIC BRAKE BOOSTER

A

5	RECONFIRM DTC

BC

(a) Clear the DTC (See page BC-45).
(b) Turn the ignition switch off.
(c) Turn the ignition switch on.
(d) Wait for more than 5 minutes.
(e) Check if the same DTC is recorded (See page BC-45).

Result

Result	Proceed to
DTC output	A
DTC not output	B

B → **REPLACE BRAKE BOOSTER PUMP ASSEMBLY**

A

REPLACE MASTER CYLINDER SOLENOID

DTC	C1253/53	Hydro Booster Pump Motor Relay Malfunction

DESCRIPTION

The motor relay (semiconductor relay) is built into the master cylinder solenoid and drives the pump motor based on a signal from the skid control ECU.

DTC No.	DTC Detecting Condition	Trouble Areas
C1253/53	Open in motor system circuit (motor input circuit)	• ABS MTR fuse • +BM terminal circuit • Hydraulic brake booster

WIRING DIAGRAM

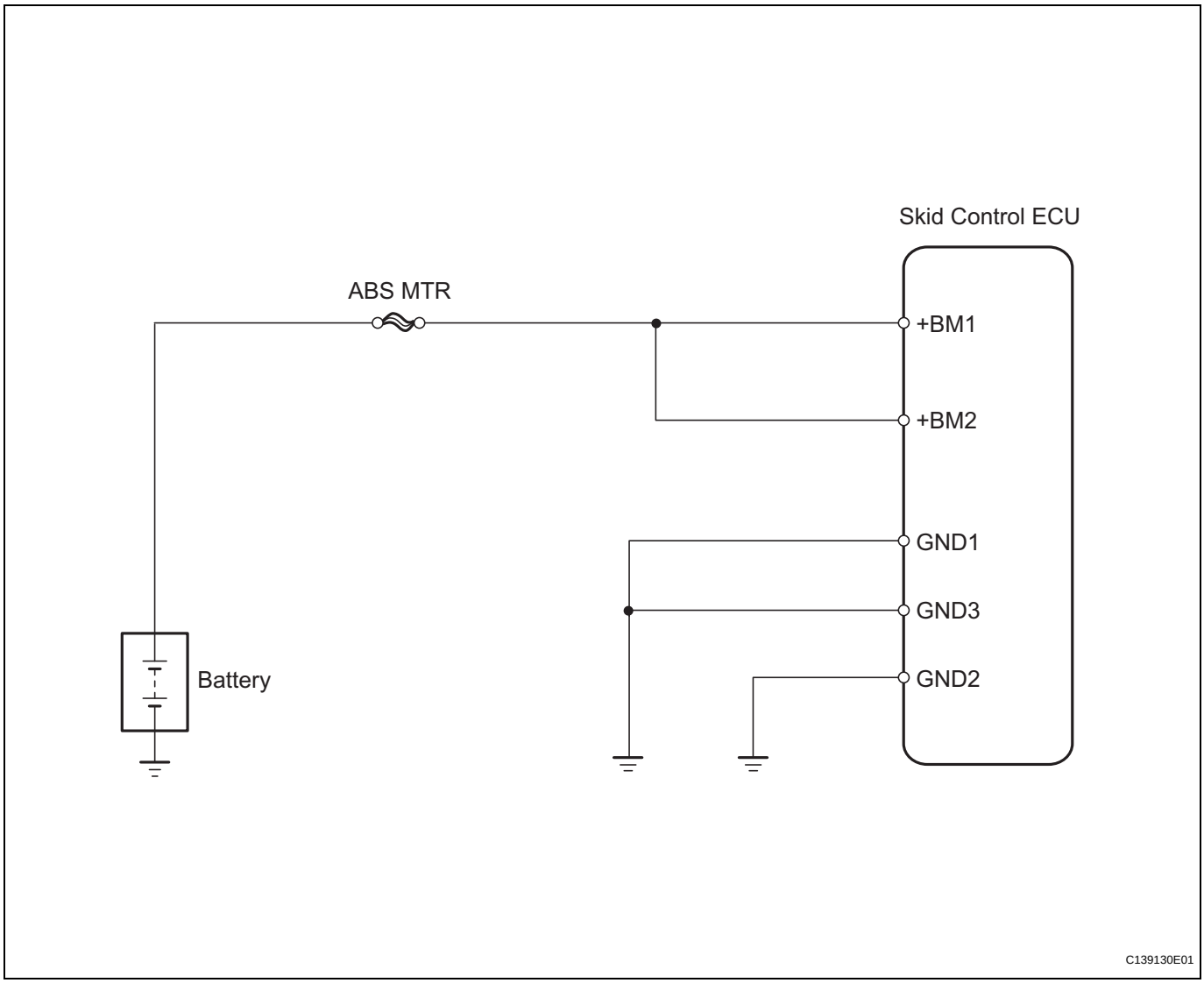

INSPECTION PROCEDURE

NOTICE:

When replacing the hydraulic brake booster, perform zero point calibration (See page BC-24).

BC

1	PERFORM ACTIVE TEST USING INTELLIGENT TESTER (ABS MOTOR RELAY)

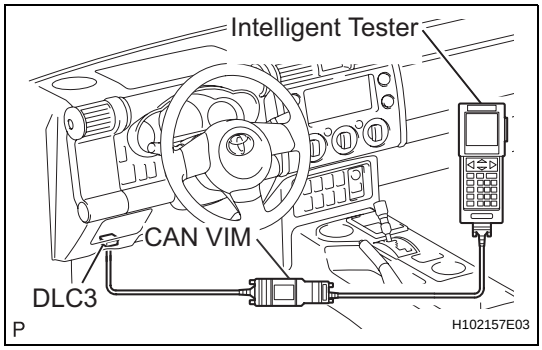

(a) Connect a intelligent tester to the DLC3.
(b) Turn the ignition switch on.
(c) Turn the tester on.
(d) Select the "ABS MOT RELAY" in the ACTIVE TEST and operate the actuator motor using the intelligent tester. Select the following menu items: DIAGNOSIS / OBD/ MOBD / select vehicle / ABS/VSC / ACTIVE TEST.

ACTIVE TEST: ABS/VSC

Item	Vehicle Condition / Test Details	Diagnostic Note
ABS MOT RELAY	Turns ABS motor relay ON or OFF	Operation of motor can be heard

(e) Check for operation sound of the actuator motor when it is operated with the intelligent tester.
OK:
The operation sound of the actuator motor can be heard.

NG → **Go to step 3**

OK

2	RECONFIRM DTC

(a) Clear the DTC (See page BC-45).
(b) Turn the ignition switch off
(c) Depress the brake pedal more than 20 times.
(d) Turn the ignition switch on.
(e) Wait until the pump motor stops.
(f) Depress the brake pedal several times until the pump motor is turned on.
(g) Wait until the pump stops.
(h) Repeat (f) and (g) three times.
(i) Check if the same DTC is recorded (See page BC-45).

Result

Result	Proceed to
DTC output	A
DTC not output	B

B → **END**

A

REPLACE HYDRAULIC BRAKE BOOSTER

3	INSPECT FUSE (ABS MTR)

Engine Room R/B No. 2:

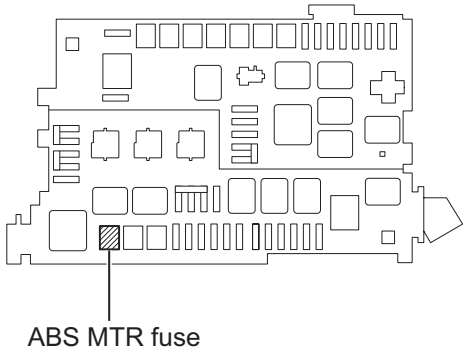

(a) Remove the ABS MTR fuse from the engine room R/B No. 2.
(b) Measure the resistance.
Standard resistance:
Below 1 Ω

NG → **CHECK FOR SHORTS IN ALL HARNESSES AND CONNECTORS CONNECTED TO FUSE AND REPLACE FUSE**

OK

4	INSPECT SKID CONTROL ECU TERMINAL VOLTAGE (+BM, +BM2 TERMINAL)

Skid Control ECU
(harness side connector):

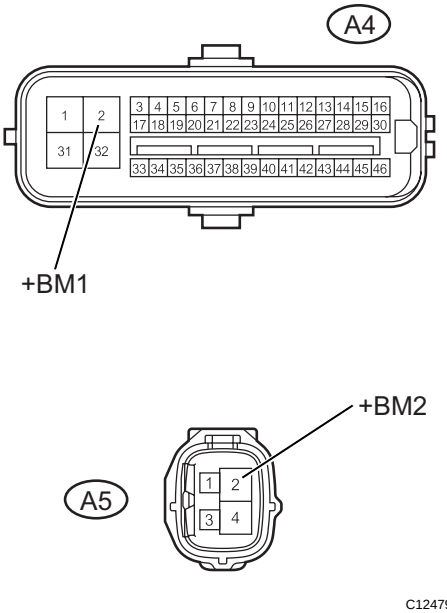

(a) Disconnect the skid control ECU connectors.
(b) Measure the voltage.
Standard voltage

Tester Connection	Specified Condition
A4-2 (+BM1) - Body ground	11 to 14 V
A5-2 (+BM2) - Body ground	11 to 14 V

NG → **REPAIR OR REPLACE HARNESS OR CONNECTOR (+BM1 AND +BM2 CIRCUIT)**

OK

BC

5 CHECK HARNESS AND CONNECTOR (SKID CONTROL ECU - BODY GROUND)

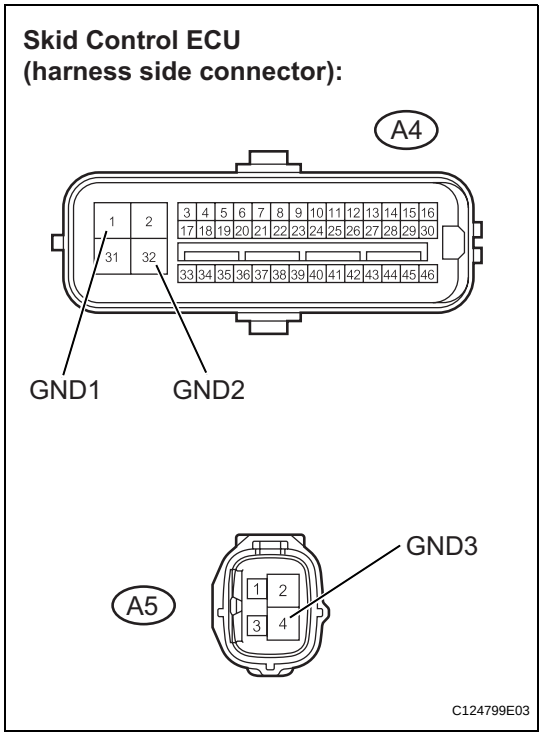

(a) Disconnect the skid control ECU connectors.
(b) Measure the resistance.

Standard resistance

Tester Connection	Specified Condition
A4-1 (GND1) - Body ground	Below 1 Ω
A4-32 (GND2) - Body ground	Below 1 Ω
A5-4 (GND3) - Body ground	Below 1 Ω

NG → **REPAIR OR REPLACE HARNESS OR CONNECTOR (GND CIRCUIT)**

OK

6 RECONFIRM DTC

(a) Clear the DTC (See page BC-45).
(b) Turn the ignition switch off.
(c) Depress the brake pedal more than 20 times.
(d) Turn the ignition switch on.
(e) Wait until the pump motor stops.
(f) Depress the brake pedal several times until the pump motor is turned on.
(g) Wait until the pump stops.
(h) Repeat (f) and (g) three times.
(i) Check if the same DTC is recorded (See page BC-45).

Result

Result	Proceed to
DTC output	A
DTC not output	B

B → **END**

A

REPLACE HYDRAULIC BRAKE BOOSTER

DTC	C1254/54	Pressure Switch Circuit

DESCRIPTION

The accumulator pressure sensor is connected to the skid control ECU in the master cylinder solenoid.

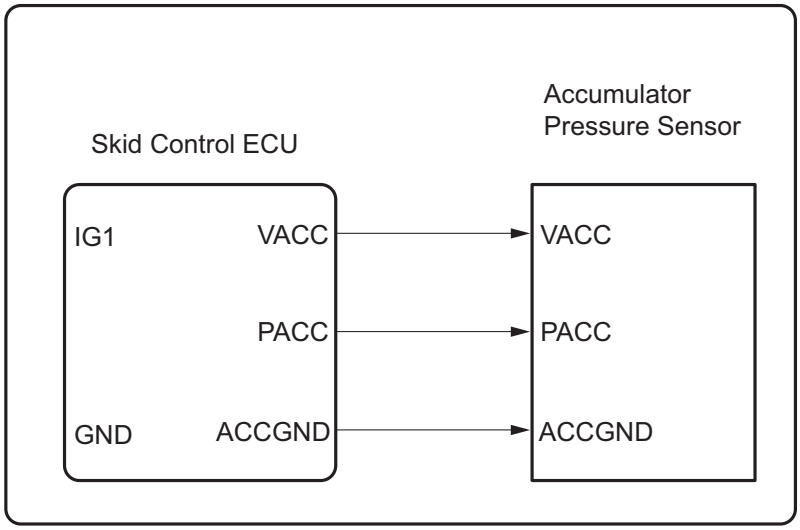

VACC: Accumulator Pressure Sensor Power Supply Output

PACC: Accumulator Pressure Sensor Signal Input

ACCGND: Accumulator Pressure Sensor Ground

Y

C124776E01

DTC No.	DTC Detecting Condition	Trouble Areas
C1254/54	Accumulator pressure sensor fault (Fluid pressure does not change when it should e.g. pump operates, brake pedal depressed/released).	• Master cylinder solenoid (skid control ECU) • Hydraulic brake booster (accumulator pressure sensor) • Hydraulic brake booster (master cylinder pressure sensor)

INSPECTION PROCEDURE

1	READ VALUE OF DATA LIST (ACCUMULATOR PRESSURE SENSOR)

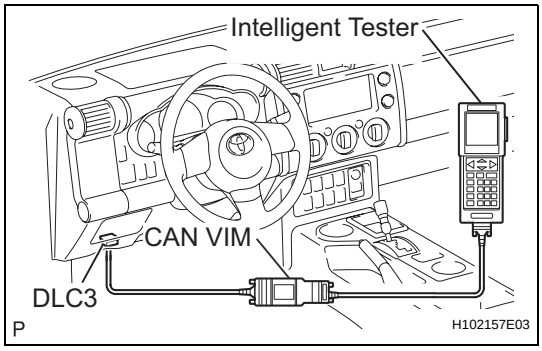

(a) Connect the intelligent tester to the DLC3.
(b) Turn the ignition switch off.
(c) Depress the brake pedal more than 20 times.
(d) Turn the ignition switch on.
(e) Select the DATA LIST mode on the intelligent tester.

DATA LIST: ABS/VSC

Item	Measurement Item / Range (Display)	Normal Condition
ACC PRESS SENS	Accumulator pressure sensor reading / min.: 0 V, max.: 5 V	3.58 to 5 V

(f) Confirm whether the accumulator output voltage is normal.

Result

Result	Proceed to
Output value normal	A
Output value not normal	B

B → **REPLACE HYDRAULIC BRAKE BOOSTER**

A

2	READ VALUE OF DATA LIST (MASTER CYLINDER PRESSURE SENSOR)

(a) Turn the ignition switch off.
(b) Depress the brake pedal more than 20 times.
(c) Install a brake pedal effort gauge (SST), and bleed air.
(d) Connect the intelligent tester to the DLC3.
(e) Turn the ignition switch on.
(f) Select the DATA LIST mode on the intelligent tester.

DATA LIST: ABS/VSC

Item	Measurement Item / Range (Display)	Normal Condition	Diagnostic Note
MAS CYL PRS 1	Master cylinder pressure sensor 1 reading / min.: 0 V, max.: 5 V	0.3 to 1.9 V With pedal pressure of 49 N (5 kgf, 11 lbf)	Front brake pressure: 770 to 1280 kpa (7.9 to 13.1 kgf/cm2, 112 to 186 psi)

(g) Check that the master cylinder output value is in the Normal Condition range.
OK:
Master cylinder pressure sensor value is in the Normal Condition.

NG → **REPLACE HYDRAULIC BRAKE BOOSTER**

OK

3	RECONFIRM DTC

(a) Clear the DTC (See page BC-45).
(b) Turn the ignition switch off.
(c) Depress the brake pedal more than 20 times.
(d) Turn the ignition switch on.
(e) Wait until the pump motor stops.
(f) Depress the brake pedal and release it.
(g) Wait for 25 minutes.
(h) Check if the same DTC is recorded (See page BC-45).

Result

Result	Proceed to
DTC output	A
DTC not output	B

B → END

A

REPLACE MASTER CYLINDER SOLENOID

DTC	C1256/56	Accumulator Low Pressure

DESCRIPTION

The accumulator pressure sensor is connected to the skid control ECU in the master cylinder solenoid.

BC

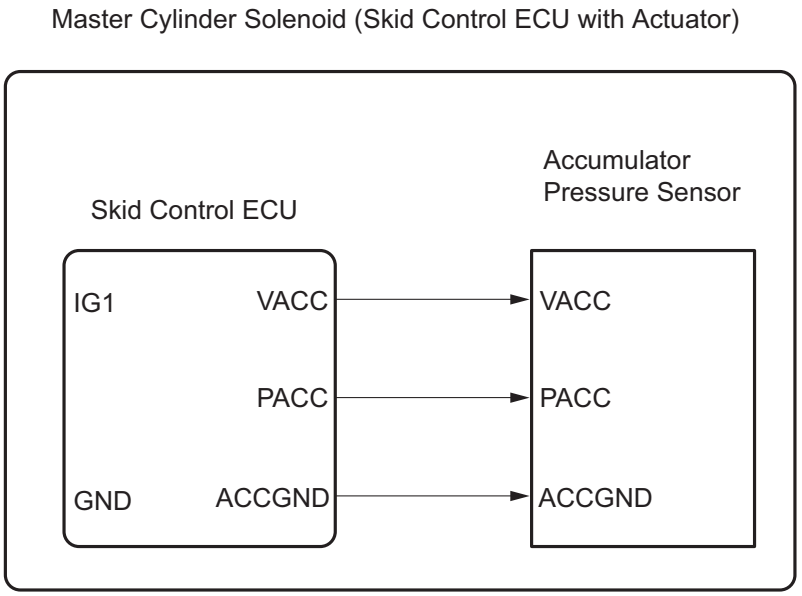

VACC: Accumulator Pressure Sensor Power Supply Output

PACC: Accumulator Pressure Sensor Signal Input

ACCGND: Accumulator Pressure Sensor Ground

Y C124776E01

DTC No.	DTC Detecting Condition	Trouble Areas
C1256/56	Fluid pressure inside the accumulator drops below the specification value.	• Hydraulic circuit • Hydraulic brake booster (accumulator pressure sensor) • Master cylinder solenoid (skid control ECU)

INSPECTION PROCEDURE

NOTICE:

When replacing the master cylinder solenoid, perform zero point calibration (See page BC-24).

1	RECONFIRM DTC

(a) Clear the DTC (See page BC-45).
(b) Turn the ignition switch off.
(c) Depress the brake pedal more than 20 times.
(d) Turn the ignition switch on.
(e) Wait for 99 seconds.
(f) Check if the same DTC is recorded (See page BC-45).

Result

Result	Proceed to
DTC output	A
DTC not output	B

B → END

A

2	CHECK HYDRAULIC CIRCUIT

(a) Perform hydraulic brake booster on-vehicle inspection (See page BR-19).
OK:
Hydraulic circuit is normal (No leakage).

NG → REPAIR HYDRAULIC CIRCUIT

OK

3	READ VALUE OF DATA LIST (MASTER CYLINDER PRESSURE SENSOR)

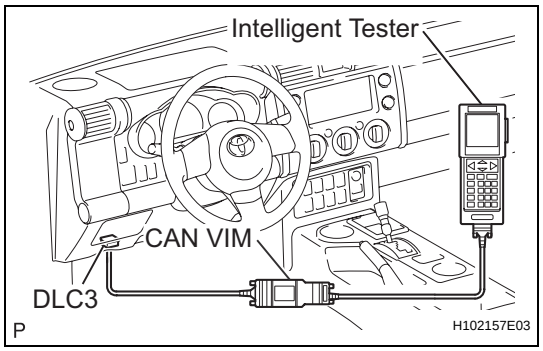

(a) Connect the intelligent tester to the DLC3.
(b) Turn the ignition switch on.
(c) Turn the tester on.
(d) Select the "DATA LIST" mode on the intelligent tester.

DATA LIST: ABS/VSC

Item	Measurement Item / Range (Display)	Normal Condition	Diagnostic Note
ACC PRESS SENS	Accumulator pressure sensor reading / min.: 0 V, max.: 5 V	3.58 to 5 V	If value constant regardless of pump operation, accumulator pressure sensor malfunction suspected.

(e) Check that the accumulator's output value is in the Normal Condition range.

OK:
Accumulator pressure sensor value is in the Normal Condition.

NG → **REPLACE HYDRAULIC BRAKE BOOSTER**

BC

OK

4	RECONFIRM DTC

(a) Clear the DTC (See page BC-45).
(b) Check if the same DTC is recorded (See page BC-45).

Result

Result	Proceed to
DTC output	A
DTC not output	B

B → **END**

A

REPLACE MASTER CYLINDER SOLENOID

DTC	C1257/57	IG Power Source

DESCRIPTION

The motor relay (semiconductor relay) is built into the hydraulic brake booster and drives the pump motor based on a signal from the skid control ECU.

DTC No.	DTC Detecting Condition	Trouble Areas
C1257/57	Open in pump motor input circuit	• Brake booster pump assembly • Master cylinder solenoid (skid control ECU)

INSPECTION PROCEDURE

NOTICE:

When replacing the master cylinder solenoid, perform zero point calibration (See page BC-24).

1	CHECK HYDRAULIC BRAKE BOOSTER PUMP MOTOR OPERATION

(a) Turn the ignition switch off.
(b) Disconnect the skid control ECU connector (A4).
(c) Depress the brake pedal more than 20 times.
(d) Check the hydraulic brake booster pump motor operation.
OK:
Hydraulic brake booster pump operates.

NG → **REPLACE BRAKE BOOSTER PUMP ASSEMBLY**

OK ↓

2	RECONFIRM DTC

(a) Turn the ignition switch off.
(b) Reconnect the skid control ECU connector (A4).
(c) Turn the ignition switch on.
(d) Clear the DTC (See page BC-45).
(e) Check if the same DTC is recorded (See page BC-45).

Result

Result	Proceed to
DTC output	A
DTC not output	B

B → **END**

A ↓

REPLACE MASTER CYLINDER SOLENOID

DTC	C1258/58	Transfer 4WD Position Switch Circuit

DTC	C1282/82	Center Differential Lock Position Switch Malfunction (Test Mode DTC)

BC

DESCRIPTION

This circuit monitors whether the transfer is in 2WD or 4WD mode and inputs the signal to the skid control ECU.
In 2WD mode, TRAC is activated.
In 4WD mode, A-TRAC is activated.

DTC No.	DTC Detecting Conditions	Trouble Areas
C1258/58	• 4WD Open in 4WD detecting circuit • 2WD Terminal NEO ground short, or abnormal signals transmitted to terminal EXI	• Transfer indicator switch (4WD position) (A/T) • Transfer indicator switch (4WD position) circuit (A/T) • Transfer indicator switch (center differential lock position) (M/T) • Transfer indicator switch (center differential lock position) circuit (M/T) • Master cylinder solenoid (skid control ECU)
C1282/82	Detected only during test mode	• Transfer indicator switch (4WD position) (A/T) • Transfer indicator switch (4WD position) circuit (A/T) • Transfer indicator switch (center differential lock position) (M/T) • Transfer indicator switch (center differential lock position) circuit (M/T)

WIRING DIAGRAM

for A/T:

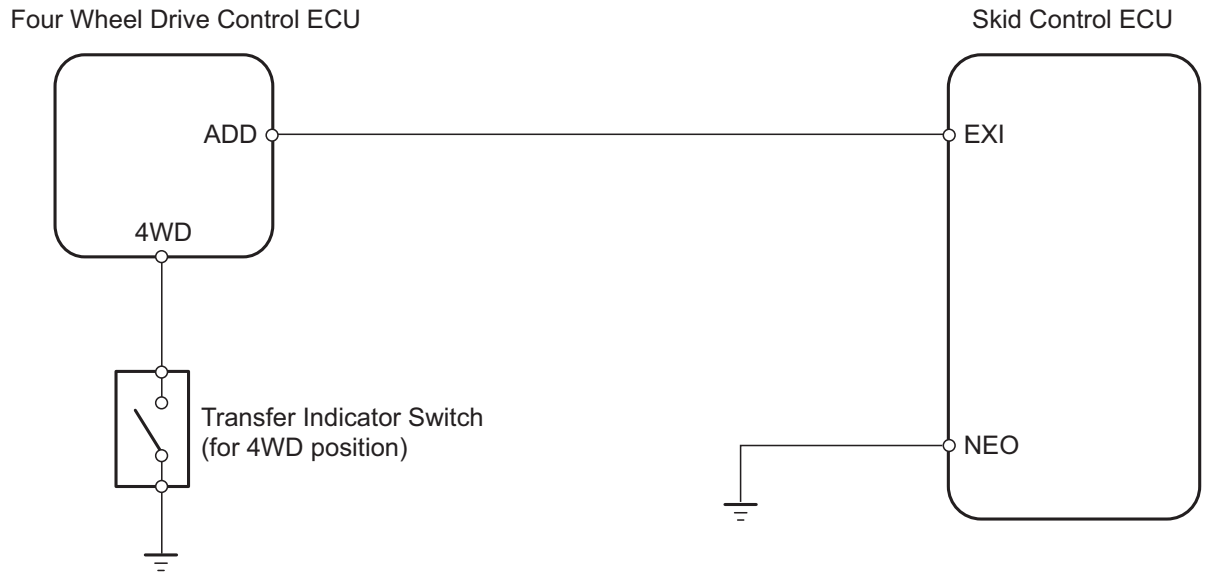

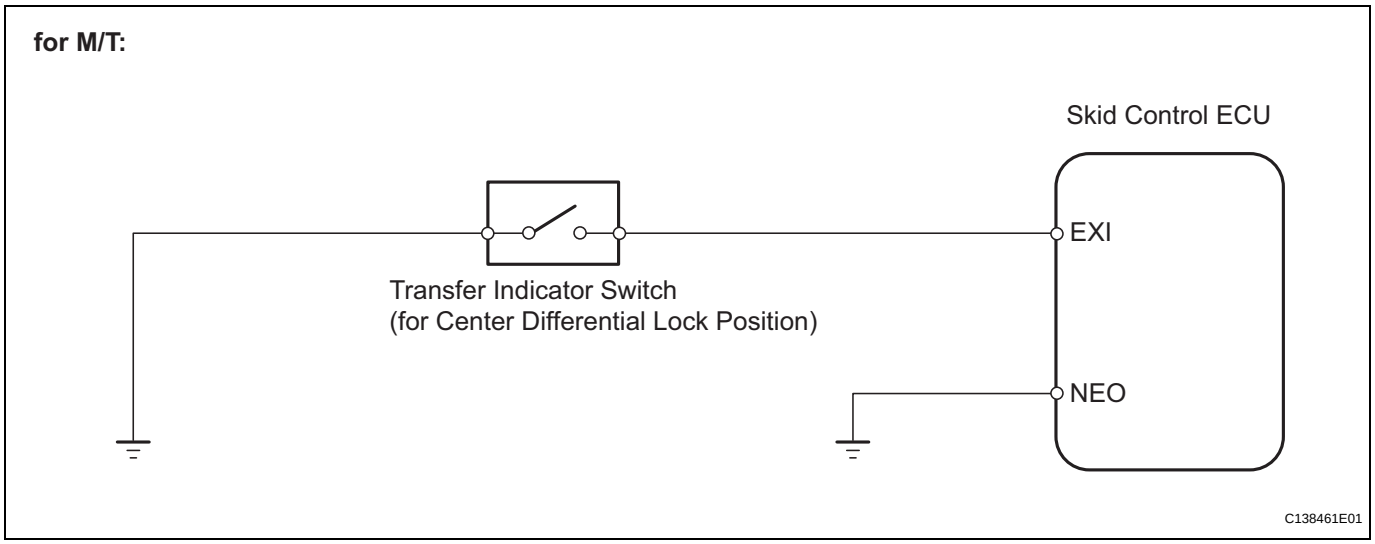

BC

INSPECTION PROCEDURE

NOTICE:

When replacing the master cylinder solenoid, perform zero point calibration (See page BC-24).

1	CONFIRM VEHICLE TYPE

(a) Confirm the vehicle drive train.

Result

Result	Proceed to
4WD	A
2WD	B

B → Go to step 3

A

2	INSPECT SKID CONTROL ECU TERMINAL VOLTAGE (EXI)

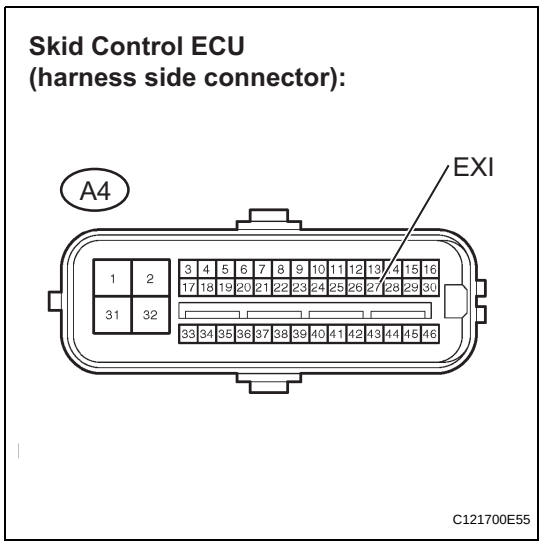

(a) Disconnect the skid control ECU connector.
(b) Turn the ignition switch on.
(c) A/T:
  (1) Move the transfer high and low shift lever to the H2, H4, and L4 ranges, and measure the voltages in each range.

Standard voltage

Tester Connection	Transfer Range	Specified Condition
A4-27 (EXI) - Body ground	H2	8 to 14 V
A4-27 (EXI) - Body ground	H4, L4	Below 1.5 V

(d) M/T:
  (1) Move the transfer high and low shift lever to the H, HL, and LL ranges, and measure the voltages in each range.

BC

Standard voltage

Tester Connection	Transfer Range	Specified Condition
A4-27 (EXI) - Body ground	H	8 to 14 V
A4-27 (EXI) - Body ground	HL, LL	Below 1.5 V

Result

Result	Proceed to
OK	A
NG (A/T)	B
NG (M/T)	C

B → Go to step 5

C → Go to step 10

A

3 CHECK HARNESS AND CONNECTOR (NEO TERMINAL - BODY GROUND)

Skid Control ECU (harness side connector):

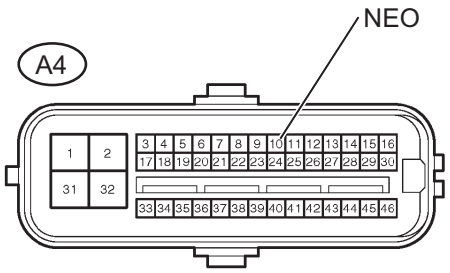

C121700E56

(a) Disconnect the skid control ECU connector.
(b) Measure the resistance.

Standard resistance

Tester Connection	Vehicle Drive Train	Specified Condition
A4-10 (NEO) - Body ground	2WD	10 kΩ or higher
A4-10 (NEO) - Body ground	4WD	Below 1 Ω

NG → REPAIR OR REPLACE HARNESS OR CONNECTOR

OK

4 RECONFIRM DTC

(a) Clear the DTC (See page BC-45).
(b) Check if the same DTC is recorded (See page BC-45).

Result

Result	Proceed to
DTC output	A
DTC not output	B

B → END

A

REPLACE MASTER CYLINDER SOLENOID

BC

5 INSPECT TRANSFER INDICATOR SWITCH (for 4WD position)

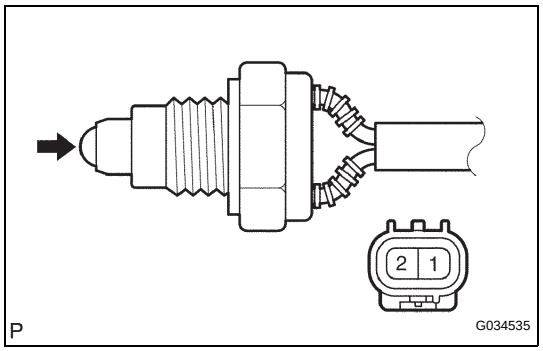

(a) Disconnect the transfer indicator switch (4WD position) connector.
(b) Remove the transfer indicator switch (4WD position).
(c) Measure the resistance.

Standard resistance

Tester Connection	Switch Position	Specified Condition
1 - 2	Pushed	Below 1 Ω
1 - 2	Released	10 kΩ or higher

NG → **REPLACE TRANSFER INDICATOR SWITCH (for 4WD POSITION)**

OK

6 CHECK HARNESS AND CONNECTOR (FOUR WHEEL DRIVE CONTROL ECU - TRANSFER INDICATOR SWITCH)

Four Wheel Drive Control ECU (harness side connector):

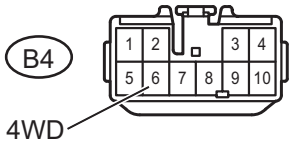

Transfer Indicator Switch (for 4WD position) (harness side connector):

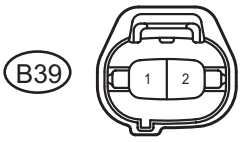

C138463E01

(a) Disconnect the four wheel drive control ECU connector.
(b) Disconnect the transfer indicator switch (for 4WD position) connector.
(c) Measure the resistance.

Standard resistance

Tester Connection	Specified Condition
B4-6 (4WD) - B39-2	Below 1 Ω
B4-6 (4WD) - Body ground	10 kΩ or higher

NG → **REPAIR OR REPLACE HARNESS OR CONNECTOR**

OK

7	CHECK HARNESS AND CONNECTOR (SKID CONTROL ECU - FOUR WHEEL DRIVE CONTROL ECU)

BC

Skid Control ECU (harness side connector):

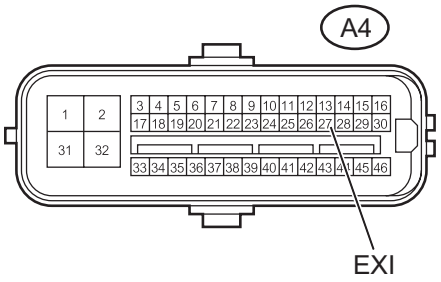

Four Wheel Drive Control ECU (harness side connector):

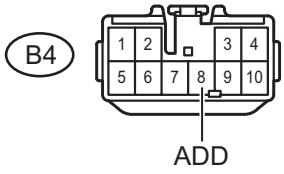

C138464E01

(a) Disconnect the skid control ECU connector.
(b) Disconnect the 4WD control ECU connector.
(c) Measure the resistance.

Standard resistance

Tester Connection	Specified Condition
A4-27 (EXI) - B4-8 (ADD)	Below 1 Ω
A4-27 (EXI) - Body ground	10 kΩ or higher

NG → **REPAIR OR REPLACE HARNESS OR CONNECTOR**

OK

8	REPLACE FOUR WHEEL DRIVE CONTROL ECU

(a) Replace the four wheel drive control ECU.

NEXT

9	RECONFIRM DTC

(a) Clear the DTC (See page BC-45).
(b) Check if the same DTC is recorded (See page BC-45).

Result

Result	Proceed to
DTC output	A
DTC not output	B

B → **END**

A

REPLACE MASTER CYLINDER SOLENOID

10 **INSPECT TRANSFER INDICATOR SWITCH (for CENTER DIFFERENTIAL LOCK POSITION)**

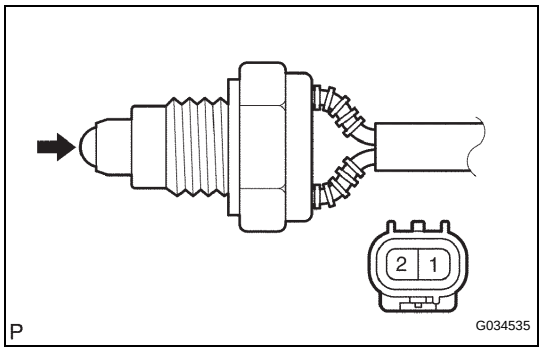

(a) Disconnect the transfer indicator switch (center differential lock position) connector.
(b) Remove the transfer indicator switch (center differential lock position).
(c) Measure the resistance.

Standard resistance

Tester Connection	Switch Position	Specified Condition
1 - 2	Pushed	Below 1 Ω
1 - 2	Released	10 kΩ or higher

NG → **REPLACE TRANSFER INDICATOR SWITCH (for CENTER DIFFERENTIAL LOCK POSITION)**

OK

11 **CHECK HARNESS AND CONNECTOR (SKID CONTROL ECU - TRANSFER INDICATOR SWITCH)**

Skid Control ECU (harness side connector):

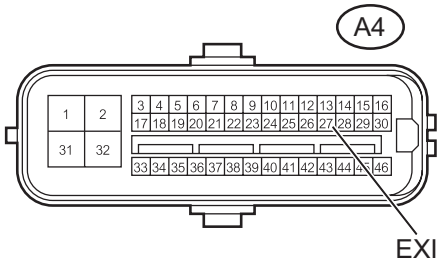

Transfer Indicator Switch (for center differential lock position) (harness side connector):

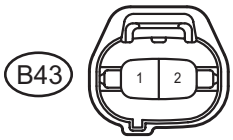

C138465E01

(a) Disconnect the skid control ECU connector.
(b) Disconnect the transfer indicator switch (center differential lock position) connector.
(c) Measure the resistance.

Standard resistance

Tester Connection	Specified Condition
A4-27 (EXI) - B43-2	Below 1 Ω
A4-27 (EXI) - Body ground	10 kΩ or higher

NG → **REPAIR OR REPLACE HARNESS OR CONNECTOR**

OK

12 **RECONFIRM DTC**

(a) Clear the DTC (See page BC-45).
(b) Check if the same DTC is recorded (See page BC-45).

Result

Result	Proceed to
DTC output	A
DTC not output	B

BC

B → END

A

REPLACE MASTER CYLINDER SOLENOID

DTC	C1268/68	Transfer "L4" Position Switch Circuit

DTC	C1283/83	L4 Position Switch Malfunction (Test Mode DTC)

DESCRIPTION

A-TRAC is activated if wheel skid is detected while the transfer is in the L4 position.

DTC No.	DTC Detecting Condition	Trouble Areas
C1268/68	L4 switch signal input to skid control ECU does not match L4 switch signal output from ECM.	• Transfer indicator switch (L4 position) • Transfer indicator switch (L4 position) circuit • Master cylinder solenoid (skid control ECU)
C1283/83	Detected only during test mode	• Transfer indicator switch (L4 position) • Transfer indicator switch (L4 position) circuit • Master cylinder solenoid (skid control ECU)

WIRING DIAGRAM

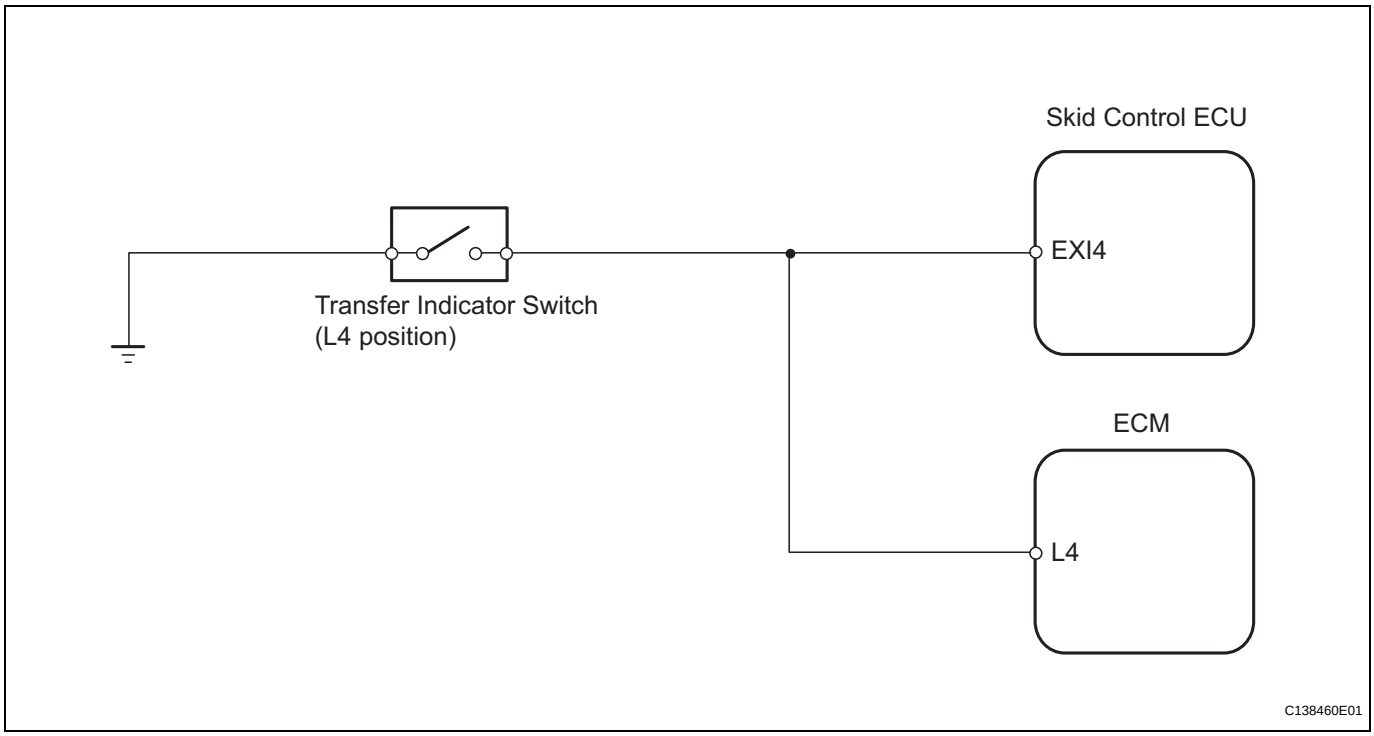

INSPECTION PROCEDURE

NOTICE:

When replacing the master cylinder solenoid, perform zero point calibration (See page BC-24).

BC

1 INSPECT SKID CONTROL ECU (EXI4 TERMINAL VOLTAGE)

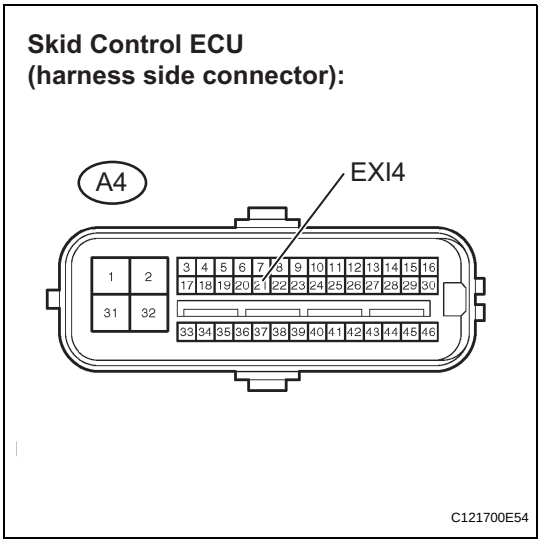

(a) Disconnect the skid control ECU connector.
(b) Turn the ignition switch on.
(c) Measure the voltage.

Standard voltage

Tester Connection	Transfer Condition	Specified Condition
A4-21 (EXI4) - Body ground	L4	Below 1.5 V
A4-21 (EXI4) - Body ground	Other than above	8 to 14 V

NG → **Go to step 4**

OK

2 PERFORM TEST MODE INSPECTION (SIGNAL CHECK)

(a) Check if the test mode DTC (C1283/83) is detected.

Result

Result	Proceed to
Test mode DTC (C1283/83) not output	A
Test mode DTC (C1283/83) output	B

B → **REPAIR TRANSFER INDICATOR SWITCH CIRCUIT (L4 POSITION)**

A

3 RECONFIRM DTC

(a) Clear the DTC (See page BC-45).
(b) Check if the same DTC is recorded (See page BC-45).

Result

Result	Proceed to
DTC output	A
DTC not output	B

B → **END**

A

REPLACE MASTER CYLINDER SOLENOID

4 INSPECT TRANSFER INDICATOR SWITCH (L4 POSITION)

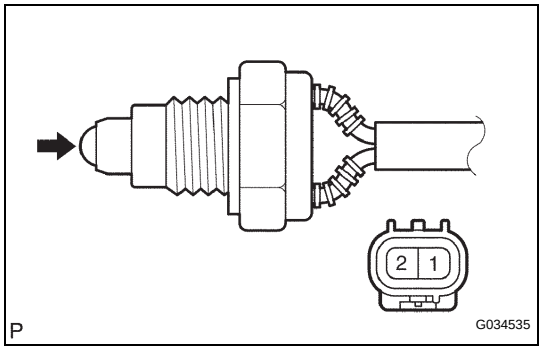

(a) Disconnect the transfer indicator switch (L4 position) connector.
(b) Remove the transfer indicator switch (L4 position).
(c) Measure the resistance.

Standard resistance

Tester Connection	Switch Position	Specified Condition
1 - 2	Pushed	Below 1 Ω
1 - 2	Free	10 kΩ or higher

NG → **REPLACE TRANSFER INDICATOR SWITCH**

OK

5 CHECK HARNESS AND CONNECTOR (SKID CONTROL ECU - TRANSFER INDICATOR SWITCH (L4 POSITION))

Skid Control ECU (harness side connector):

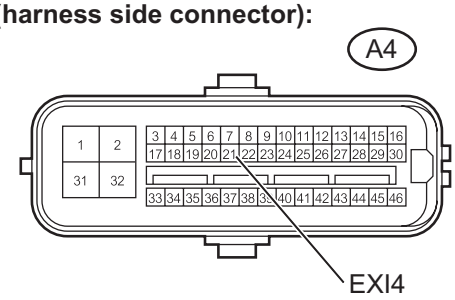

Transfer Indicator Switch (for L4 position) (harness side connector)

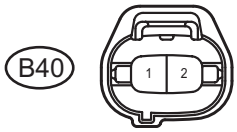

C138459E01

(a) Disconnect the skid control ECU connector.
(b) Disconnect the transfer indicator switch (L4 position) connector.
(c) Measure the resistance.

Standard resistance

Tester Connection	Specified Condition
A4-21 (EXI4) - B40-1	Below 1 Ω
A4-21 (EXI4) - Body ground	10 kΩ or higher

NG → **REPAIR OR REPLACE HARNESS OR CONNECTOR**

OK

6	CHECK HARNESS AND CONNECTOR (SKID CONTROL ECU - ECM)

BC

Skid Control ECU
(harness side connector):

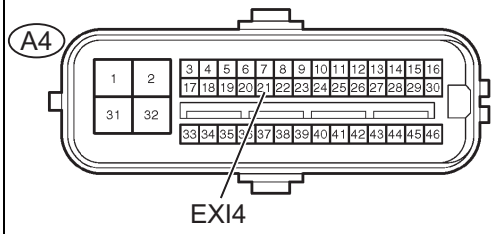

ECM:

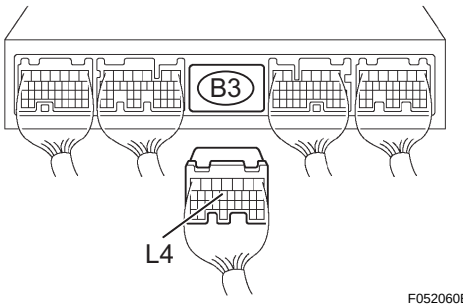

Y

F052060E02

(a) Disconnect the skid control ECU connector.
(b) Disconnect the ECM connector.
(c) Measure the resistance.

Standard resistance

Tester Connection	Specified Condition
A4-21 (EXI4) - B3-13 (L4)	Below 1 Ω
A4-21 (EXI4) - Body ground	10 kΩ or higher
B3-13 (L4) - Body ground	10 kΩ or higher

NG → **REPAIR OR REPLACE HARNESS OR CONNECTOR**

OK

REPLACE MASTER CYLINDER SOLENOID

DTC	C1337/37	Different Diameter Tire Malfunction

DESCRIPTION

The skid control ECU measures the speed of each wheel by receiving signals from the speed sensors. These signals are used for recognizing whether all 4 wheels are operating properly. Therefore, all wheel signals must be equal.

DTC No.	DTC Detecting Condition	Trouble Areas
C1337/37	When either of following conditions detected: • Diameters different of 2 front wheels and 2 rear wheels. • Wheel speed sensor fault	• Speed sensor circuit • Tire sizes • Master cylinder solenoid (skid control ECU)

INSPECTION PROCEDURE

NOTICE:

When replacing the master cylinder solenoid, perform zero point calibration (See page BC-24).

1 CHECK DTC

(a) Check if the DTC(s) relating to the speed sensor circuit is output (See page BC-45).

Result

Result	Proceed to
DTC not output	A
DTC output	B

B → **REPAIR SPEED SENSOR CIRCUIT**

A

2 CHECK TIRE SIZE

(a) Check tire size and condition of all 4 wheels.

OK:

All 4 wheels are the same size and in the same condition.

NG → **REPLACE TIRES SO THAT ALL 4 TIRES ARE SAME IN SIZE**

OK

3 RECONFIRM DTC

(a) Clear the DTC (See page BC-45).
(b) Drive the vehicle at more than 13 mph (20 km/h) for more than 60 seconds.
(c) Check if the same DTC is detected (See page BC-45).

Result

Result	Proceed to
DTC output	A
DTC not output	B

B → END

A

BC

REPLACE MASTER CYLINDER SOLENOID

DTC	C1380/64	Stop Light Control Relay Malfunction

DESCRIPTION

The skid control ECU inputs the stop light switch signal and detects the status of the brake operation.

DTC No.	DTC Detecting Conditions	Trouble Areas
C1380/64	Either of following conditions met when IG1 terminal voltage between 10 V and 14 V: • Despite STPO (stop light driving output) being on, no signal input to STP terminal for 5 seconds or more • Despite STPO being off, input signals of STP and STP2 do not match	• Stop light switch assembly • Stop light switch circuit • STOP LP CTRL relay • Master cylinder solenoid (skid control ECU)

WIRING DIAGRAM

See page BC-111.

INSPECTION PROCEDURE

NOTICE:

When replacing the master cylinder solenoid, perform zero point calibration (See page BC-24).

1	CHECK STOP LIGHT SWITCH OPERATION

(a) Check that the stop lights come on when the brake pedal is depressed and go off when the brake pedal is released.

OK

Pedal Condition	Illumination Condition
Brake pedal depressed	ON
Brake pedal released	OFF

HINT:

Check the stop light bulbs as they may have burnt out.

NG → **CHECK STOP LIGHT SWITCH CIRCUIT**

OK

BC

2 INSPECT SKID CONTROL ECU TERMINAL VOLTAGE (STP)

Skid Control ECU (harness side connector):

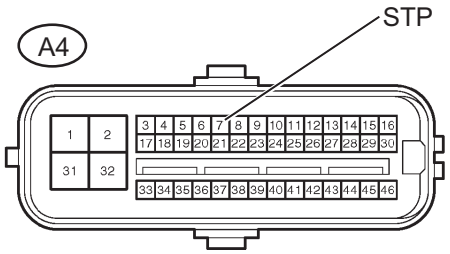

C121700E58

(a) Disconnect the skid control ECU connector.
(b) Measure the voltage.
Standard voltage

Tester Connection	Switch condition	Specified Condition
A4-7 (STP) - Body ground	Brake pedal depressed	8 to 14 V
A4-7 (STP) - Body ground	Brake pedal released	Below 1.5 V

NG → **REPAIR OR REPLACE HARNESS OR CONNECTOR (STP CIRCUIT)**

OK

3 INSPECT SKID CONTROL ECU TERMINAL VOLTAGE (STP2)

Skid Control ECU (harness side connector):

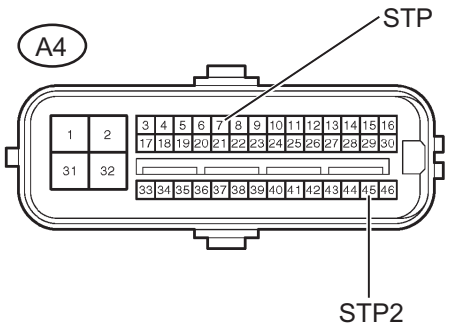

C121700E57

(a) Disconnect the skid control ECU connector.
(b) Turn the ignition switch on.
(c) Measure the resistance.
Standard resistance

Tester Connection	Specified Condition
A4-7 (STP) - A4-45 (STP2)	Below 1 Ω

NG → **REPAIR OR REPLACE HARNESS OR CONNECTOR (STP2 CIRCUIT)**

OK

4	PERFORM ACTIVE TEST USING INTELLIGENT TESTER (STOP LIGHT RELAY)

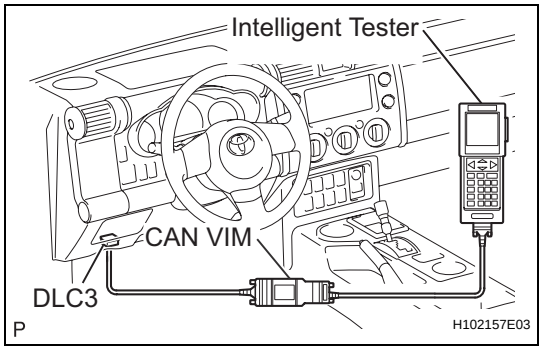

(a) Connect the intelligent tester to the DLC3.
(b) Turn the ignition switch on.
(c) Turn the intelligent tester on.
(d) Select the ACTIVE TEST mode on the intelligent tester.

BC

ACTIVE TEST: ABS/VSC

Item	Vehicle Condition / Test Details	Diagnostic Note
STP LIGHT RELAY	Turns stop light relay ON / OFF	Observe stop lights

(e) Check that the stop lights turn on and off on the rear combination light when using the intelligent tester.

OK:

The stop lights turn on and off according to the intelligent tester operations.

NG → **Go to step 6**

OK

5	RECONFIRM DTC

(a) Clear the DTC (See page BC-45).
(b) Check if the same DTC is recorded (See page BC-45).

Result

Result	Proceed to
DTC output	A
DTC not output	B

B → **END**

A

REPLACE MASTER CYLINDER SOLENOID

BC

6 CHECK STOP LP CTRL RELAY

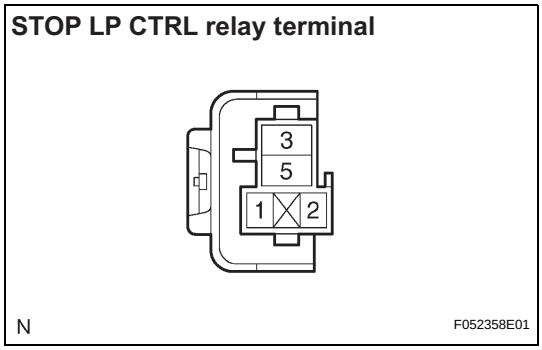

(a) Disconnect the STOP LP CTRL relay.
(b) Turn the ignition switch on.
(c) Measure the voltage.
Standard voltage

Tester Connection	Condition	Specified Condition
Terminal 5 - Body ground	Always	8 to 14 V
Terminal 1 - Body ground	Always	8 to 14 V

NG → **REPAIR OR REPLACE HARNESS OR CONNECTOR**

OK

7 INSPECT STOP CTRL LP RELAY

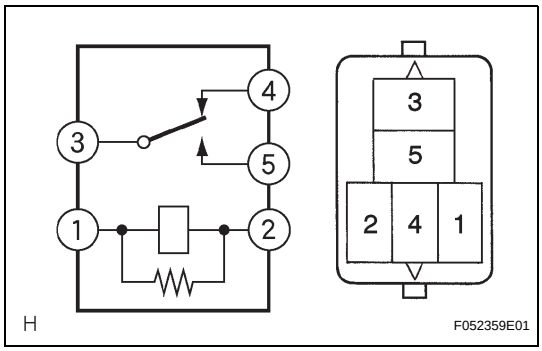

(a) Remove the STOP LP CTRL relay from the engine room R/B No. 2.
(b) Measure the resistance.
Standard resistance

Tester Connection	Specified Condition
3 - 4	Below 1 Ω
3 - 5	10 kΩ or higher

(c) Measure the resistance.
Standard resistance

Tester Connection	Condition	Specified Condition
3 - 4	Battery voltage applied between terminals 1 (+) and 2 (-)	10 kΩ or higher
3 - 5	Battery voltage applied between terminals 1 (+) and 2 (-)	Below 1 Ω

NG → **REPLACE STOP LP CTRL RELAY**

OK

8 INSPECT SKID CONTROL ECU TERMINAL VOLTAGE (STPO)

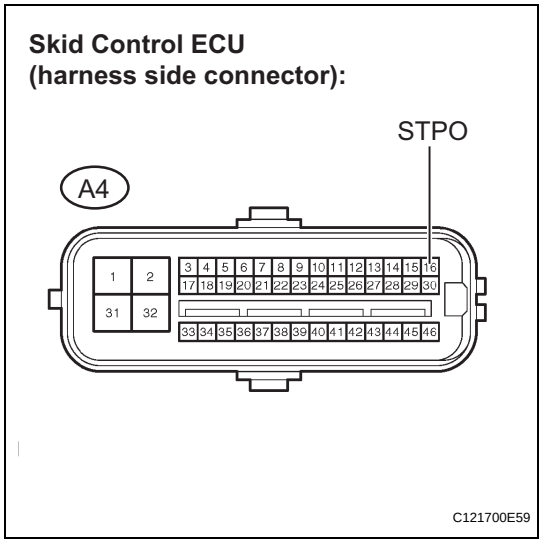

(a) Disconnect the skid control ECU connector.
(b) Turn the ignition switch on.
(c) Measure the voltage.

Standard voltage

Tester Connection	Condition	Specified Condition
A4-16 (STPO) - Body ground	Brake pedal depressed	11 to 14 V

NG → **REPAIR OR REPLACE HARNESS OR CONNECTOR (STPO CIRCUIT)**

OK

9 RECONFIRM DTC

(a) Clear the DTC (See page BC-45).
(b) Check if the same DTC is recorded (See page BC-45).

Result

Result	Proceed to
DTC output	A
DTC not output	B

B → **END**

A

REPLACE MASTER CYLINDER SOLENOID

DTC	U0073/94	Control Module Communication Bus OFF

DTC	U0100/65	Lost Communication with ECM / PCM

BC

DTC	U0123/62	Lost Communication with Yaw Rate Sensor Module

DTC	U0124/95	Lost Communication with Lateral Acceleration Sensor Module

DTC	U0126/63	Lost Communication with Steering Angle Sensor Module

DESCRIPTION

DTC No.	DTC Detecting Conditions	Trouble Area
U0073/94	When either of following conditions (1 or 2) detected: 1. After data output from skid control ECU completed, output continues for 5 seconds or more. 2. Bus off condition occurs once or more per 0.1 seconds 10 times in succession.	CAN communication system
U100/65	When IG1 terminal voltage 10 V or more and vehicle speed 9 mph (15 km/h) or more, either of following conditions (1 or 2) occurs 10 times in succession: 1. Data cannot be sent to ECM once or more within 5 seconds. 2. Data from ECM cannot be received once or more within 5 seconds.	CAN communication system
U0123/62	When IG1 terminal voltage 10 V or more, either of following conditions (1 or 2) detected: 1. Data from yaw rate sensor cannot be received for 1 second or more. 2. Data from yaw rate sensor cannot be received once or more within 5 seconds.	CAN communication system
U0124/95	When IG1 terminal voltage 9.5 V or more, either of following conditions (1 or 2) detected: 1. Data from deceleration sensor cannot be received for 1 second or more. 2. Data from deceleration sensor cannot be received once or more within 5 seconds.	CAN communication system
U0123/63	When IG1 terminal voltage 10 V or more, either of following conditions (1 or 2) detected: 1. Data from steering angle sensor cannot be received for 1 second or more. 2. Data from steering angle sensor cannot be received once or more within 5 seconds.	CAN communication system

INSPECTION PROCEDURE

1	RECONFIRM DTC

(a) Clear the DTC(s) (See page BC-45).
(b) Check if the same DTC(s) is output (See page BC-45).

Result

Result	Proceed to
DTC output	A
DTC not output	B

B → END

A

REPAIR CAN COMMUNICATION SYSTEM

ABS Warning Light Remains ON

DESCRIPTION

If any of the following is detected, the ABS warning light remains ON.

1. The skid control ECU connectors are disconnected from the skid control ECU.
2. There is a malfunction in the skid control ECU internal circuit.
3. There is an open in the harness between the combination meter and skid control ECU.

WIRING DIAGRAM

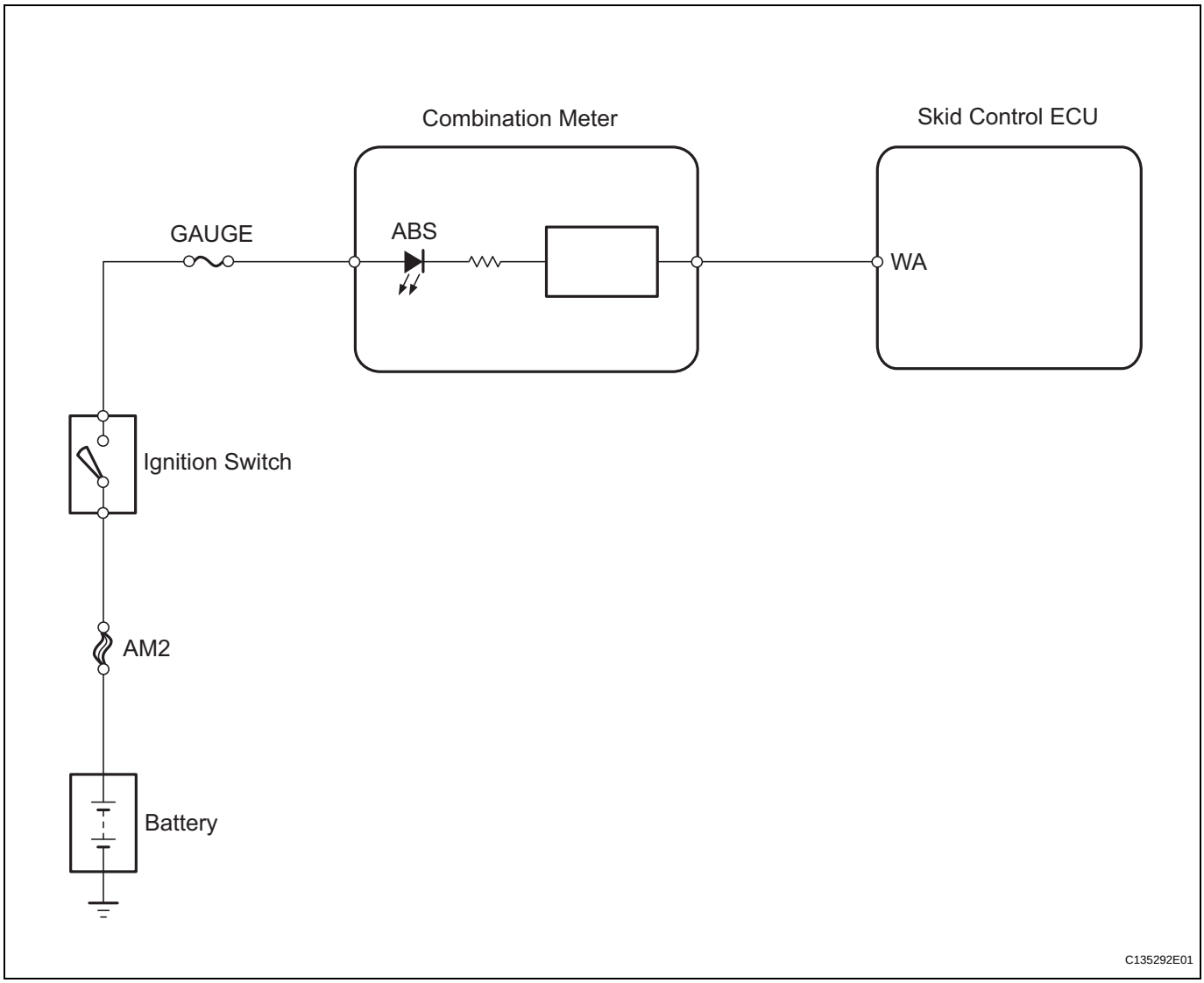

INSPECTION PROCEDURE

NOTICE:

When replacing the master cylinder solenoid, perform zero point calibration (See page BC-24).

1	**CHECK DTC**

(a) Check if DTCs for ABS are recorded (See page BC-45).

Result

Result	Proceed to
DTC not output	A
DTC output	B

B → **REPAIR CIRCUITS INDICATED BY OUTPUT DTCS**

BC

A

2 INSPECT SKID CONTROL ECU CONNECTOR

(a) Check that the ECU connector is securely connected.

OK:

The connector is securely connected.

NG → **CONNECT CONNECTOR CORRECTLY**

OK

3 CHECK HARNESS AND CONNECTOR (SKID CONTROL ECU - COMBINATION METER)

Skid Control ECU (harness side connector):

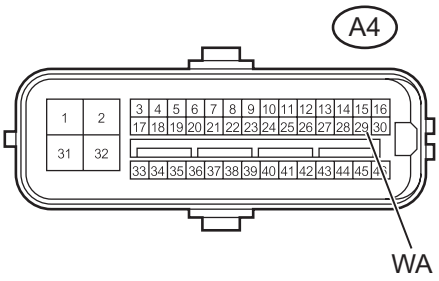

Combination Meter (harness side connector):

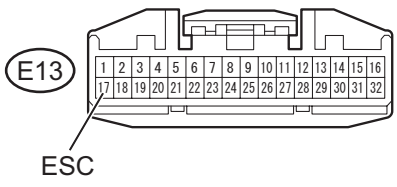

C135293E01

(a) Disconnect the skid control ECU connector.

(b) Disconnect the combination meter connector.

(c) Measure the resistance.

Standard resistance

Tester Connection	Specified Condition
A4-29 (WA) - E13-17 (ESC)	Below 1 Ω

(d) Measure the resistance.

Standard resistance

Tester Connection	Specified Condition
A4-29 (WA) - Body ground	10 kΩ or higher

NG → **REPAIR OR REPLACE HARNESS OR CONNECTOR**

OK

4 INSPECT COMBINATION METER ASSEMBLY

(a) Check the combination meter system (See page ME-15).

OK:

Combination meter is normal.

NG → **REPLACE COMBINATION METER ASSEMBLY**

OK

BC

REPLACE MASTER CYLINDER SOLENOID

ABS Warning Light does not Come ON

DESCRIPTION

If the ECU detects trouble, it illuminates the ABS warning light while at the same time prohibiting ABS control.
At this time, the ECU records a DTC in its memory.
Connecting terminals TC and CG of the DLC3 causes the ECU to display 2-digit DTCs by blinking the ABS warning light.

WIRING DIAGRAM

See page BC-151.

INSPECTION PROCEDURE

NOTICE:
When replacing the master cylinder solenoid, perform zero point calibration (See page BC-24).

1	CHECK ABS WARNING LIGHT

(a) Disconnect the skid control ECU connector.
(b) Turn the ignition switch on.
(c) Check that the ABS warning light comes on.
OK:
ABS warning light comes on.

OK → **REPLACE MASTER CYLINDER SOLENOID**

NG

2	CHECK HARNESS AND CONNECTOR (SKID CONTROL ECU - COMBINATION METER)

Skid Control ECU
(harness side connector):

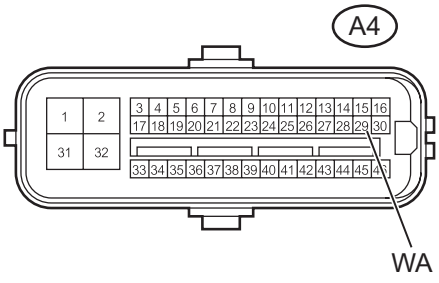

Combination Meter
(harness side connector):

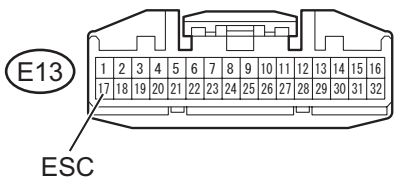

C135293E01

(a) Disconnect the skid control ECU connector.
(b) Disconnect the combination meter connector.
(c) Measure the resistance.
Standard resistance

Tester Connection	Specified Condition
A4-29 (WA) - E13-17 (ESC)	Below 1 Ω
A4-29 (WA) - Body ground	10 kΩ or higher

NG → **REPAIR OR REPLACE HARNESS OR CONNECTOR**

OK

3	INSPECT COMBINATION METER ASSEMBLY

BC

(a) Check the combination meter system (See page BC-36).
OK:
Combination meter is normal.

NG → **REPLACE COMBINATION METER ASSEMBLY**

OK

CHECK FOR INTERMITTENT PROBLEMS

VSC TRAC Warning Light Remains ON

DESCRIPTION

When the skid control ECU stores DTCs, the VSC and TRAC functions are deactivated and the VSC TRAC warning light comes on in the combination meter.

WIRING DIAGRAM

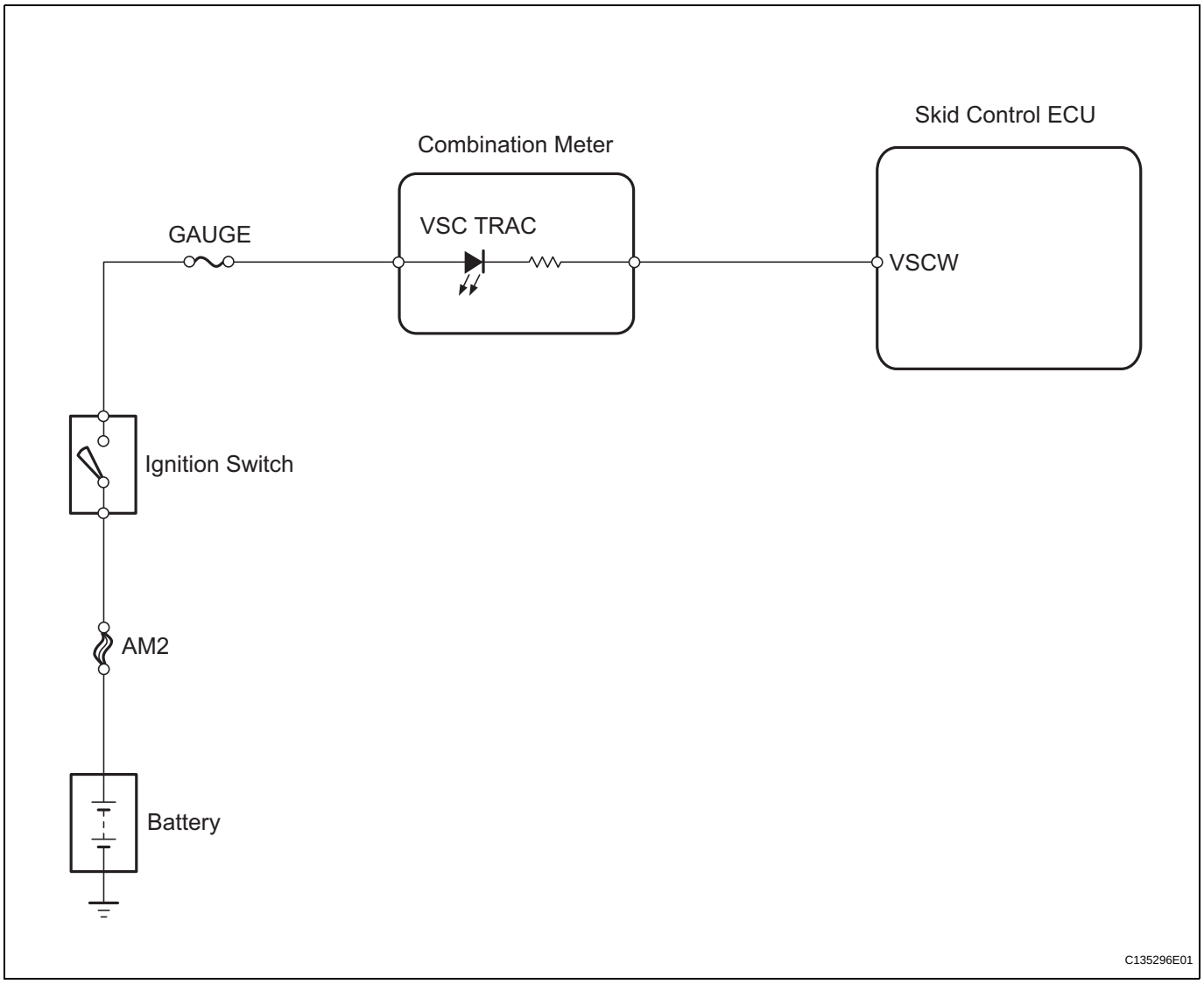

INSPECTION PROCEDURE

NOTICE:

When replacing the master cylinder solenoid, perform zero point calibration (See page BC-24).

1	CHECK DTC

(a) Check if DTCs for VSC are recorded (See page BC-45).

Result

Result	Proceed to
DTC not output	A
DTC output	B

B → REPAIR CIRCUITS INDICATED BY OUTPUT DTCS

A

BC

2 INSPECT SKID CONTROL ECU CONNECTOR

(a) Check that the ECU connector is securely connected.
OK:
The connector is securely connected.

NG → CONNECT CONNECTOR CORRECTLY

OK

3 CHECK HARNESS AND CONNECTOR (SKID CONTROL ECU - COMBINATION METER)

Skid Control ECU (haness side connector):

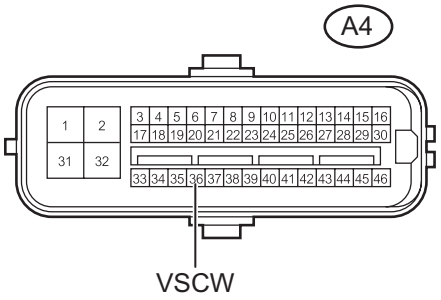

Combination Meter (harness side connector):

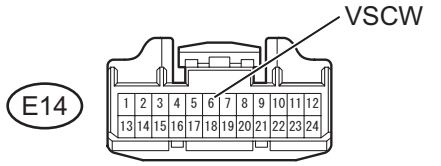

C135294E01

(a) Disconnect the skid control ECU connector.
(b) Disconnect the combination meter connector.
(c) Measure the resistance.
Standard resistance

Tester Connection	Specified Condition
A4-36 (VSCW) - E14-6 (VSCW)	Below 1 Ω
A4-36 (VSCW) - Body ground	10 kΩ or higher

NG → REPAIR OR REPLACE HARNESS OR CONNECTOR

OK

4 INSPECT COMBINATION METER ASSEMBLY

(a) Check the combination meter system (See page ME-29).
OK:
Combination meter is normal.

NG → REPLACE COMBINATION METER ASSEMBLY

OK

REPLACE MASTER CYLINDER SOLENOID

VSC TRAC Warning Light does not Come ON

DESCRIPTION

When the ECU stores DTCs, the VSC warning light illuminates on the combination meter.

BC

WIRING DIAGRAM

See page BC-156.

INSPECTION PROCEDURE

NOTICE:

When replacing the master cylinder solenoid, perform zero point calibration (See page BC-24).

1	PERFORM ACTIVE TEST USING INTELLIGENT TESTER (VSC TRAC WARNING LIGHT)

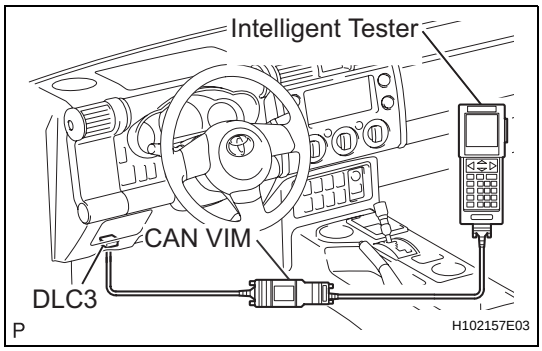

(a) Connect an intelligent tester to the DLC3.
(b) Turn the ignition switch on.
(c) Turn the tester on.
(d) Select the "VSC WARN LIGHT" in the ACTIVE TEST and operate the VSC TRAC warning light using the intelligent tester.
Select the following menu items: DIAGNOSIS / OBD/ MOBD / select vehicle / ABS/VSC / ACTIVE TEST.

ACTIVE TEST: ABS/VSC

Item (Display)	Test Details	Diagnostic Note
VSC WARN LIGHT	Turns VSC TRAC warning light ON and OFF	Observe combination meter

(e) Check that the VSC TRAC warning light turns on and off in the combination meter using the intelligent tester.
OK:
The VSC TRAC warning light turns ON and OFF in accordance with the intelligent tester operation.

OK → **REPLACE MASTER CYLINDER SOLENOID**

NG

2 CHECK HARNESS AND CONNECTOR (SKID CONTROL ECU - COMBINATION METER)

Skid Control ECU (haness side connector):

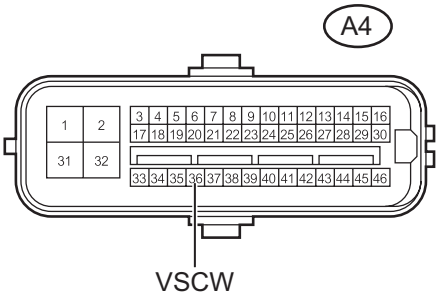

Combination Meter (harness side connector):

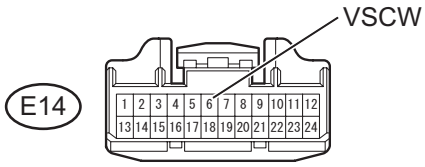

C135294E01

(a) Disconnect the skid control ECU connector.
(b) Disconnect the combination meter connector.
(c) Measure the resistance.

Standard resistance

Tester Connection	Specified Condition
A4-36 (VSCW) - E14-6 (VSCW)	Below 1 Ω
A4-36 (VSCW) - Body ground	10 kΩ or higher

NG → **REPAIR OR REPLACE HARNESS OR CONNECTOR**

OK

3 INSPECT COMBINATION METER ASSEMBLY

(a) Check the combination meter system (See page ME-29).

OK:

Combination meter is normal.

NG → **REPLACE COMBINATION METER ASSEMBLY**

OK

REPLACE MASTER CYLINDER SOLENOID

Brake Warning Light Remains ON

DESCRIPTION

The BRAKE warning light lights up when the brake fluid is insufficient, the parking brake is applied or the EBD is defective.

BC

WIRING DIAGRAM

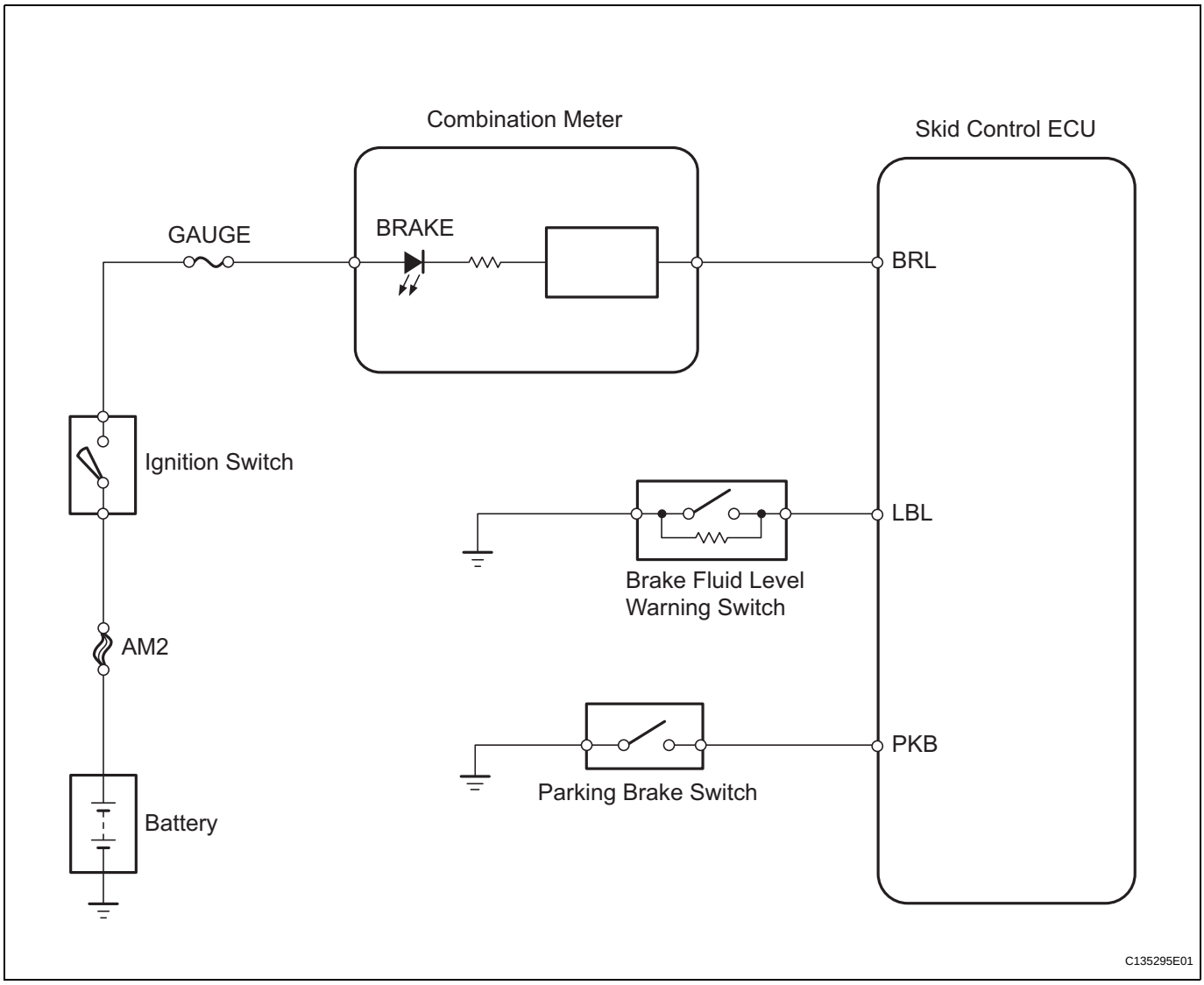

INSPECTION PROCEDURE

NOTICE:

When replacing the master cylinder solenoid, perform zero point calibration (See page BC-24).

1	CHECK DTC

(a) Check for the DTCs (See page BC-45).

Result

Result	Proceed to
DTC not output	A
DTC output	B

B → REPAIR CIRCUITS INDICATED BY OUTPUT DTCS

A

2 CHECK BRAKE FLUID LEVEL

(a) Check the amount of brake fluid in the brake reservoir.
OK:
Brake fluid level is correct.

NG → ADD BRAKE FLUID

OK

3 CHECK SKID CONTROL ECU CONNECTOR

(a) Check whether the skid control ECU connector is connected securely.
OK:
The skid control ECU connector is connected securely.

NG → CONNECT CONNECTOR CORRECTLY

OK

4 INSPECT BRAKE FLUID LEVEL WARNING SWITCH

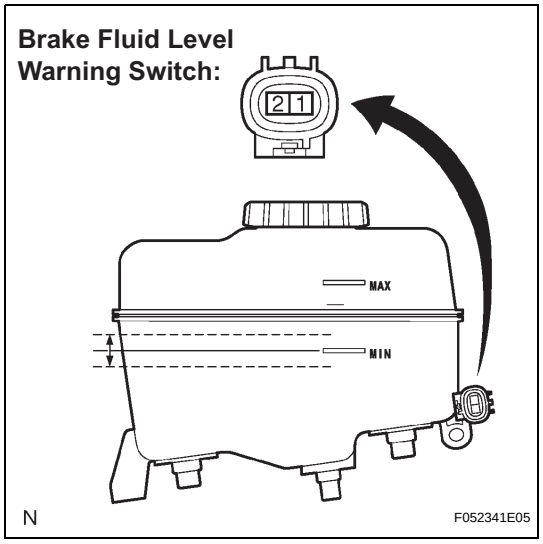

(a) Disconnect the brake fluid level warning switch connector.
(b) Measure the resistance.
Standard resistance

Tester Connection	Condition	Specified Condition
1 - 2	Float UP	1.9 k to 2.1 kΩ
1 - 2	Float DOWN	Below 1 Ω

HINT:
If the result is as specified, adjust the brake fluid level to the MAX level after measuring the resistance.

NG → REPLACE BRAKE MASTER CYLINDER RESERVOIR SUB-ASSEMBLY

OK

5	CHECK HARNESS AND CONNECTOR (SKID CONTROL ECU - BRAKE FLUID LEVEL WARNING SWITCH)

BC

Skid Control ECU (harness side connector):

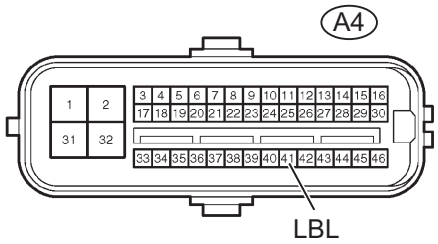

Brake Fluid Level Warning Switch (harness side connector):

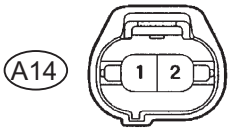

F051748E03

(a) Disconnect the skid control ECU connector.
(b) Disconnect the brake fluid level warning switch connector.
(c) Measure the resistance.
Standard resistance

Tester Connection	Specified Condition
A4-41 (LBL) - A14-2	Below 1 Ω
A4-41 (LBL)- Body ground	10 kΩ or higher

NG → **REPAIR OR REPLACE HARNESS OR CONNECTOR**

OK

6	INSPECT PARKING BRAKE SWITCH ASSEMBLY

Parking Brake Switch:

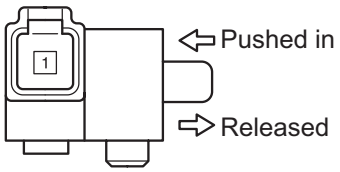

Y C129357E04

(a) Disconnect the parking brake switch connector.
(b) Measure the resistance.
Standard resistance

Tester Connection	Switch Condition	Specified Condition
1 - Body ground	Released	Below 1 Ω
1 - Body ground	Pushed in	10 kΩ or higher

NG → **REPLACE PARKING BRAKE SWITCH ASSEMBLY**

OK

7 CHECK HARNESS AND CONNECTOR (SKID CONTROL ECU - PARKING BRAKE SWITCH)

Skid Control ECU (harness side connector): A4

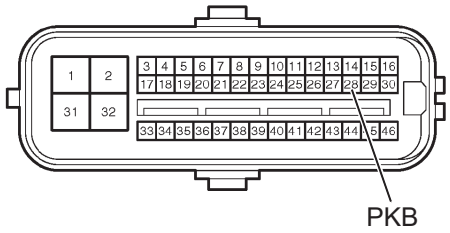

Parking Brake Switch (harness side connector):

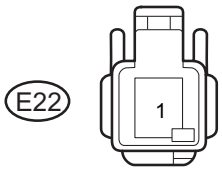

C124797E03

(a) Disconnect the skid control ECU.
(b) Disconnect the parking brake switch connector.
(c) Measure the resistance.

Standard resistance

Tester Connection	Specified Condition
A4-28 (PKB) - E22-1	Below 1 Ω
A4-28 (PKB) - Body ground	10 kΩ or higher

NG → **REPAIR OR REPLACE HARNESS OR CONNECTOR**

OK

8 CHECK HARNESS AND CONNECTOR (SKID CONTROL ECU - COMBINATION METER)

Skid Control ECU (harness side connector):

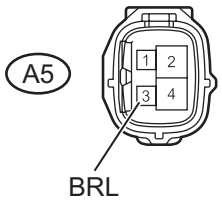

Combination Meter (harness side connector):

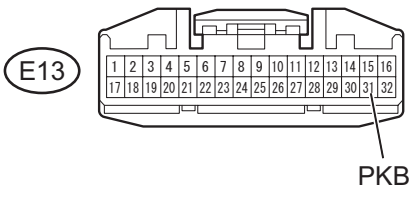

C135297E01

(a) Disconnect the skid control ECU connector.
(b) Disconnect the combination meter connector.
(c) Measure the resistance.

Standard resistance

Tester Connection	Specified Condition
A5-3 (BRL) - E13-31 (PKB)	Below 1 Ω
A5-3 (BRL) - Body ground	10 kΩ or higher

NG → **REPAIR OR REPLACE HARNESS OR CONNECTOR**

OK

9	INSPECT COMBINATION METER ASSEMBLY

(a) Check the combination meter system (See page ME-29).
OK:
Combination meter is normal.

NG → **REPLACE COMBINATION METER ASSEMBLY**

OK ↓

REPLACE MASTER CYLINDER SOLENOID

Brake Warning Light does not Come ON

WIRING DIAGRAM

See page BC-161.

INSPECTION PROCEDURE

BC

NOTICE:

When replacing the master cylinder solenoid, perform zero point calibration (See page BC-24).

1	PERFORM ACTIVE TEST USING INTELLIGENT TESTER

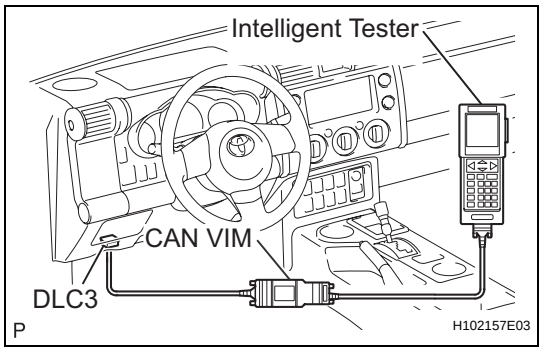

(a) Connect the intelligent tester to the DLC3.
(b) Turn the ignition switch on.
(c) Turn the tester on.
(d) Select the "BRAKE WRN LIGHT" in the ACTIVE TEST and operate the BRAKE warning light using the intelligent tester.
Select the following menu items: DIAGNOSTIC / OBD/ MOBD / select vehicle / ABS/VSC / ACTIVE TEST.

ACTIVE TEST: ABS/VSC

Item (Display)	Test Details	Diagnostic Note
BRAKE WRN LIGHT	Turns BRAKE warning light ON and OFF	Observe combination meter

(e) Check that the BRAKE warning light turns on and off in the combination meter using the intelligent tester.
OK:
The BRAKE warning light turns ON and OFF in accordance with the intelligent tester operation.

OK → **REPLACE MASTER CYLINDER SOLENOID**

NG

BC

2 CHECK HARNESS AND CONNECTOR (SKID CONTROL ECU - COMBINATION METER)

Skid Control ECU (harness side connector):

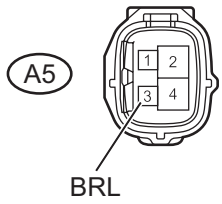

Combination Meter (harness side connector):

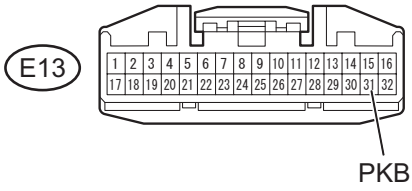

C135297E01

(a) Disconnect the skid control ECU connector.
(b) Disconnect the combination meter connector.
(c) Measure the resistance.

Standard resistance

Tester Connection	Specified Condition
A5-3 (BRL) - E13-31 (PKB)	Below 1 Ω
A5-3 (BRL) - Body ground	10 kΩ or higher

NG → **REPAIR OR REPLACE HARNESS OR CONNECTOR**

OK

3 INSPECT COMBINATION METER ASSEMBLY

(a) Check the combination meter system (See page ME-29).

OK:

Combination meter is normal.

NG → **REPLACE COMBINATION METER ASSEMBLY**

OK

REPLACE MASTER CYLINDER SOLENOID

VSC OFF Indicator Light Remains ON

DESCRIPTION

When the rear differential is locked or during the 4WD mode, VSC control turns off and the VSC OFF indicator illuminates. Also, the VSC OFF indicator light is ON when the VSC system is in fail-safe control.

WIRING DIAGRAM

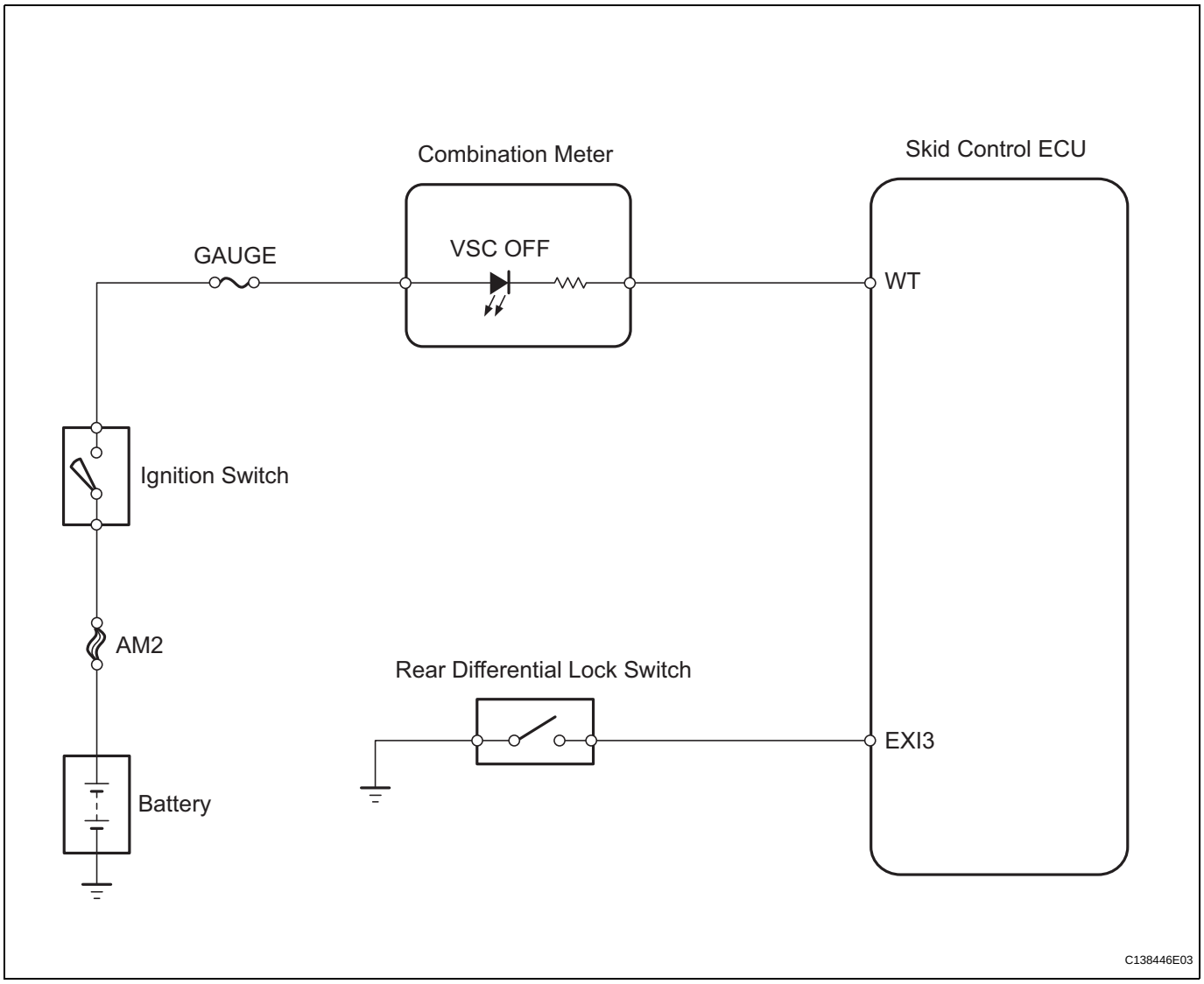

INSPECTION PROCEDURE

NOTICE:

When replacing the master cylinder solenoid, perform zero point calibration (See page BC-24).

1	CHECK DTC

(a) Check if DTCs for VSC are recorded (See page BC-45).

Result

Result	Proceed to
DTC not output	A
DTC output	B

B → REPAIR CIRCUITS INDICATED BY OUTPUT DTCS

A

BC

2 INSPECT REAR DIFFERENTIAL LOCK SWITCH

Rear Differential Lock Switch:

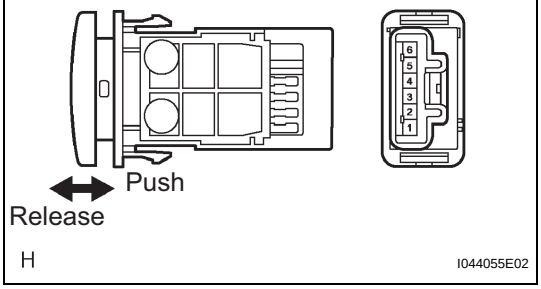

(a) Remove the rear differential lock switch.
(b) Disconnect the rear differential lock switch connector
(c) Measure the resistance.

Standard resistance

Tester Connection	Switch Condition	Specified Condition
3 - 4	Released	10 kΩ or higher
3 - 4	Pushed in	Below 1 Ω

NG → REPLACE DIFFERENTIAL LOCK SWITCH

OK

3 CHECK HARNESS AND CONNECTOR (FOUR WHEEL DRIVE CONTROL ECU - DIFFERENTIAL LOCK SWITCH)

Four Wheel Drive Control ECU (harness side connector):

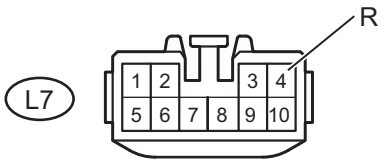

Differential Lock Switch (harness side connector):

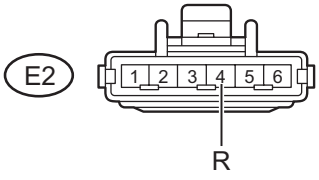

(a) Disconnect the four wheel drive control ECU connector.
(b) Disconnect the differential lock switch connector.
(c) Measure the resistance.

Standard resistance

Tester Connection	Specified Condition
L7-4 (R) - E2-4	Below 1 Ω
L7-4 (R) - Body ground	10 kΩ or higher

NG → REPAIR OR REPLACE HARNESS OR CONNECTOR

OK

4 CHECK HARNESS AND CONNECTOR (SKID CONTROL ECU - COMBINATION METER)

Skid Control ECU (haness side connector):

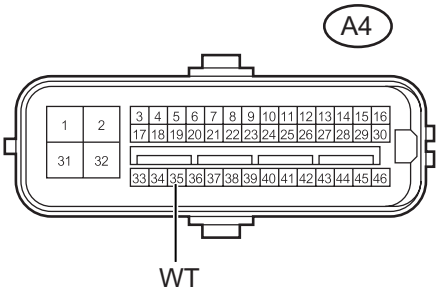

Combination Meter (harness side connector):

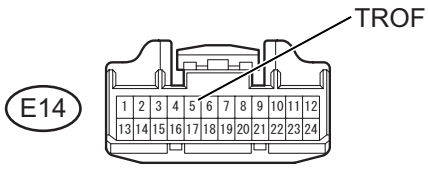

C135294E02

(a) Disconnect the skid control ECU connector.
(b) Disconnect the combination meter connector.
(c) Measure the resistance.
Standard resistance

Tester Connection	Specified Condition
A4-35 (WT) - E14-5 (TROF)	Below 1 Ω
A4-35 (WT) - Body ground	10 kΩ or higher

NG → **REPAIR OR REPLACE HARNESS OR CONNECTOR**

OK

5 INSPECT COMBINATION METER ASSEMBLY

(a) Check the combination meter system (See page ME-29).
OK:
Combination meter is normal.

NG → **REPLACE COMBINATION METER ASSEMBLY**

OK

REPLACE MASTER CYLINDER SOLENOID

BC

VSC OFF Indicator Light does not Come ON

DESCRIPTION

See page BC-168.

BC

WIRING DIAGRAM

See page BC-168.

INSPECTION PROCEDURE

NOTICE:

When replacing the master cylinder solenoid, perform zero point calibration (See page BC-24).

1	PERFORM ACTIVE TEST USING INTELLIGENT TESTER (VSC OFF INDICATOR LIGHT)

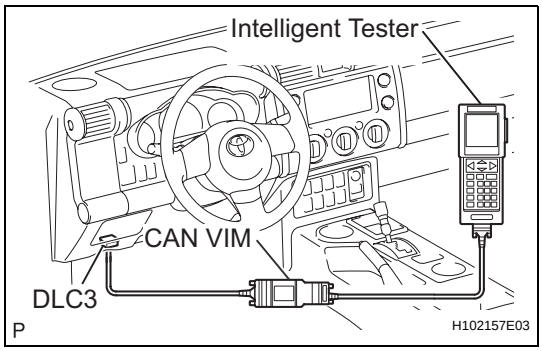

(a) Connect the intelligent tester to the DLC3.
(b) Turn the ignition switch on.
(c) Turn the tester on.
(d) Select the "VSC/BR OFF IND" in the ACTIVE TEST and operate the VSC OFF indicator light using the intelligent tester.
Select the following menu items: DIAGNOSIS / OBD/ MOBD /select vehicle / ABS/VSC / ACTIVE TEST.

ACTIVE TEST : ABS/VSC

Item (Display)	Test Details	Diagnostic Notes
VSC/TRC OFF IND	Turns VSC OFF indicator light ON and OFF	Observe combination meter

(e) Check that the VSC OFF indicator light turns on and off in the combination meter using the intelligent tester.
OK:
The VSC OFF indicator light turns ON and OFF in accordance with the intelligent tester operation.

OK → **REPLACE MASTER CYLINDER SOLENOID**

NG

2	CHECK HARNESS AND CONNECTOR (SKID CONTROL ECU - COMBINATION METER)

Skid Control ECU
(haness side connector):

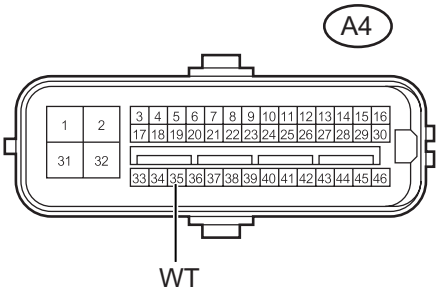

Combination Meter
(harness side connector):

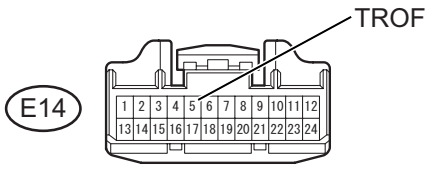

C135294E02

(a) Disconnect the skid control ECU connector.
(b) Disconnect the combination meter connector.
(c) Measure the resistance.
Standard resistance

Tester Connection	Specified Condition
A4-35 (WT) - E14-5 (TROF)	Below 1 Ω
A4-35 (WT) - Body ground	10 kΩ or higher

NG → **REPAIR OR REPLACE HARNESS OR CONNECTOR**

OK

3	INSPECT COMBINATION METER ASSEMBLY

(a) Check the combination meter system (See page ME-29).
OK:
Combination meter is normal.

NG → **REPLACE COMBINATION METER ASSEMBLY**

OK

REPLACE MASTER CYLINDER SOLENOID

BC

Slip Indicator Light Remains ON

DESCRIPTION

- The SLIP indicator blinks when any of the TRAC, VSC and AUTO LSD operate.
- When the system fails, the SLIP indicator light illuminates to warn the driver.

BC

WIRING DIAGRAM

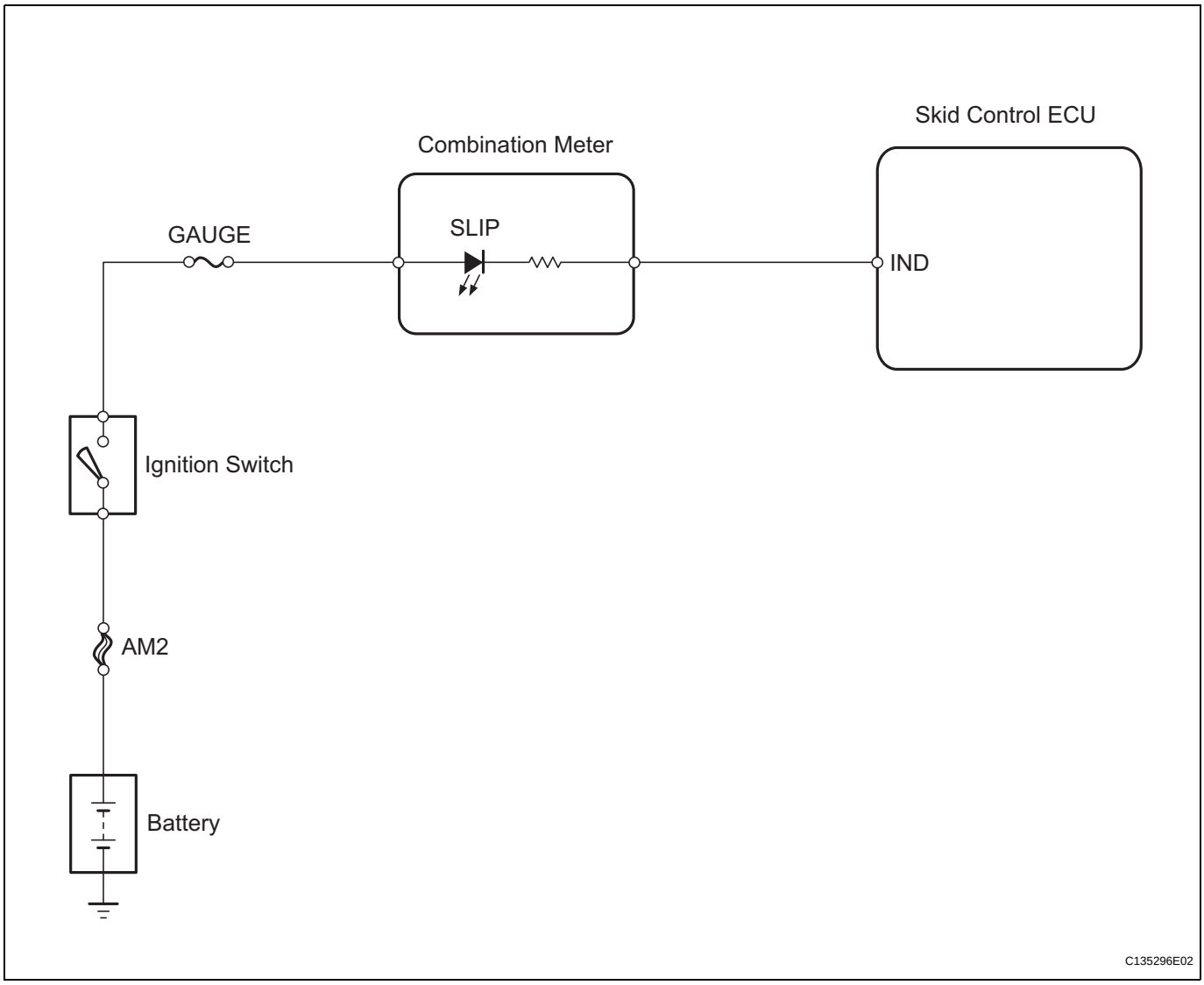

INSPECTION PROCEDURE

NOTICE:

When replacing the master cylinder solenoid, perform zero point calibration (See page BC-24).

1	CHECK DTC

(a) Check for the DTCs (See page BC-45).

Result

Result	Proceed to
DTC not output	A
DTC output	B

B → REPAIR CIRCUITS INDICATED BY OUTPUT DTCS

A

2 CHECK HARNESS AND CONNECTOR (SKID CONTROL ECU - COMBINATION METER)

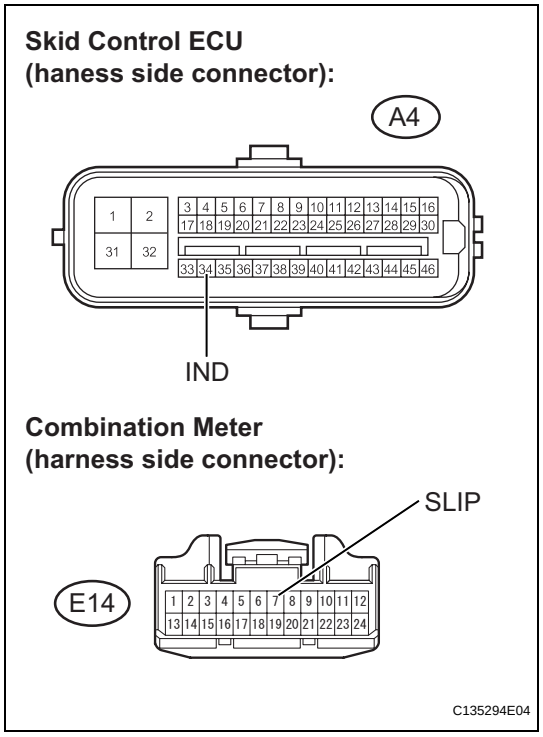

(a) Disconnect the skid control ECU connector.
(b) Disconnect the combination meter connector.
(c) Measure the resistance.
Standard resistance

Tester Connection	Specified Condition
A4-34 (IND) - E14-7 (SLIP)	Below 1 Ω
A4-34 (IND) - Body ground	10 kΩ or higher

NG → REPAIR OR REPLACE HARNESS OR CONNECTOR

OK

3 INSPECT COMBINATION METER ASSEMBLY

(a) Check the combination meter system (See page ME-29).
OK:
Combination meter is normal.

NG → REPLACE COMBINATION METER ASSEMBLY

OK

REPLACE MASTER CYLINDER SOLENOID

Slip Indicator Light does not Come ON

WIRING DIAGRAM

See page BC-173

BC

INSPECTION PROCEDURE

NOTICE:

When replacing the master cylinder solenoid, perform zero point calibration (See page BC-24).

1	PERFORM ACTIVE TEST USING INTELLIGENT TESTER (SLIP INDICATOR LIGHT)

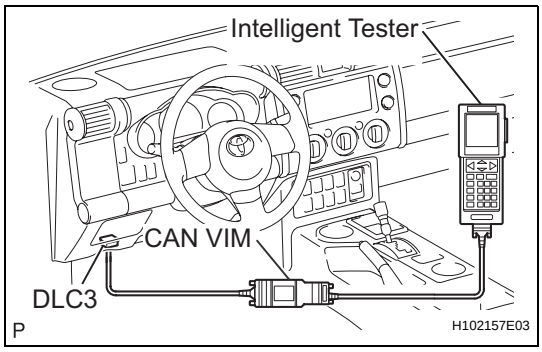

(a) Connect the intelligent tester to the DLC3.
(b) Turn the ignition switch on.
(c) Turn the tester on.
(d) Select the "SLIP INDI LIGHT" in the ACTIVE TEST and operate the SLIP indicator light using the intelligent tester.
Select the following menu items: DIAGNOSIS / OBD/ MOBD /select vehicle / ABS/ VSC / ACTIVE TEST.

ACTIVE TEST: ABS/VSC

Item (Display)	Test Details	Diagnostic Notes
SLIP INDI LIGHT	Turns SLIP indicator light ON and OFF	Observe combination meter

(e) Check that the SLIP indicator light turns on and off in the combination meter using the intelligent tester.
OK:
The SLIP indicator light turns ON and OFF in accordance with the intelligent tester operation.

OK → **REPLACE MASTER CYLINDER SOLENOID**

NG

2 CHECK HARNESS AND CONNECTOR (SKID CONTROL ECU - COMBINATION METER)

Skid Control ECU (haness side connector):

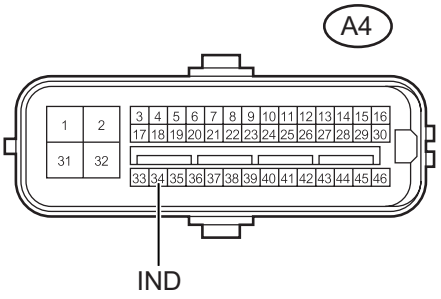

Combination Meter (harness side connector):

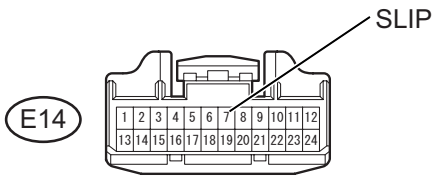

C135294E04

(a) Disconnect the skid control ECU connector.
(b) Disconnect the combination meter connector.
(c) Measure the resistance.
Standard resistance

Tester Connection	Specified Condition
A4-34 (IND) - E14-7 (SLIP)	Below 1 Ω
A4-34 (IND) - Body ground	10 kΩ or higher

NG → **REPAIR OR REPLACE HARNESS OR CONNECTOR**

OK

3 INSPECT COMBINATION METER ASSEMBLY

(a) Check the combination meter system (See page ME-29).
OK:
Combination meter is normal.

NG → **REPLACE COMBINATION METER ASSEMBLY**

OK

REPLACE MASTER CYLINDER SOLENOID

AUTO LSD Indicator Light Remains ON

DESCRIPTION

This is the AUTO LSD main switch circuit. When the AUTO LSD switch is pushed on, the AUTO LSD function is available and the AUTO LSD indicator light illuminates.

BC

HINT:

The AUTO LSD does not operate even if the AUTO LSD switch is pressed under the following conditions:

- TRAC or VSC system is faulty.
- Temperature inside the hydraulic brake booster increases and the AUTO LSD operation is suspended.

WIRING DIAGRAM

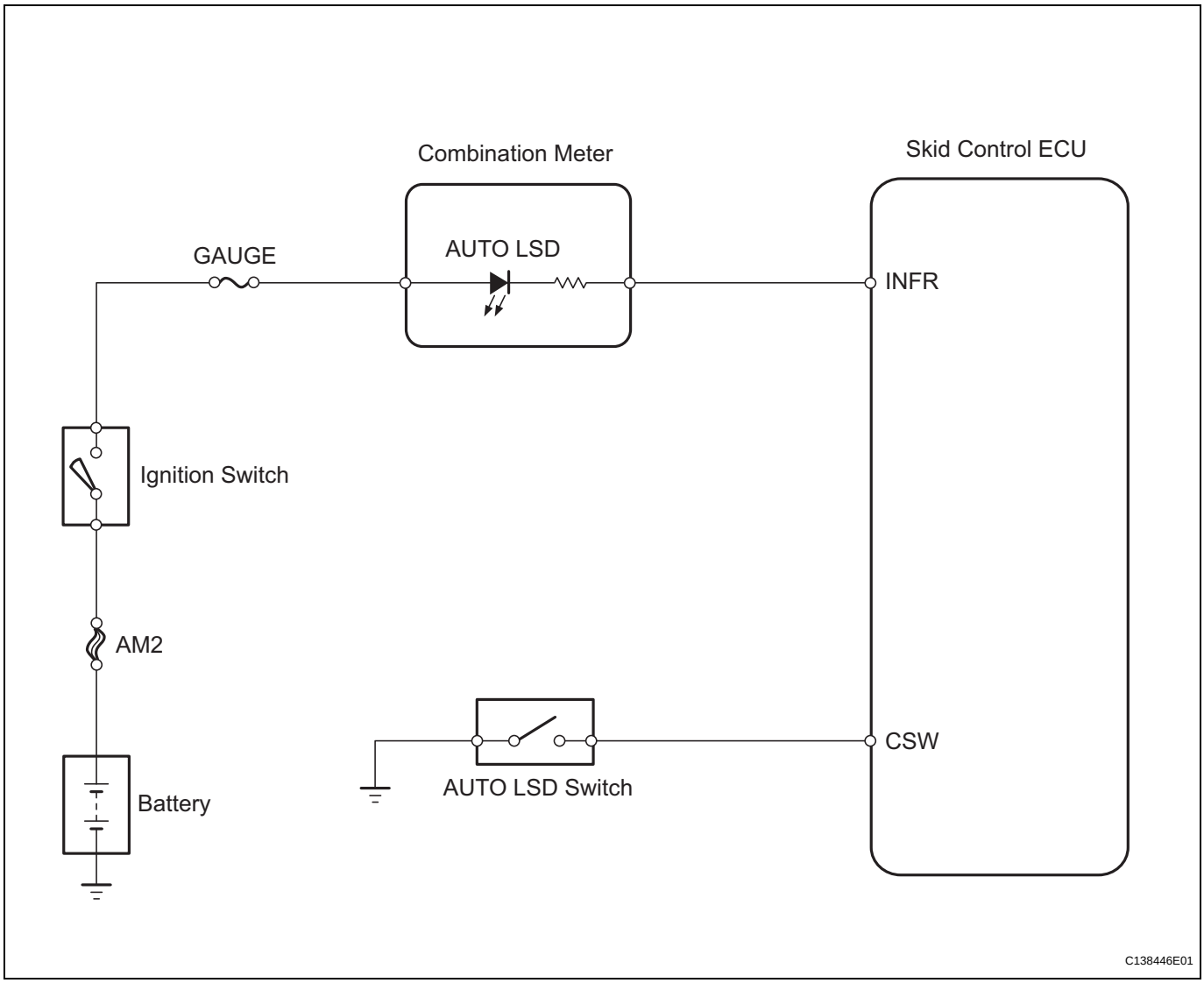

INSPECTION PROCEDURE

NOTICE:

When replacing the master cylinder solenoid, perform zero point calibration (See page BC-24).

1 INSPECT AUTO LSD SWITCH

AUTO LSD Switch:

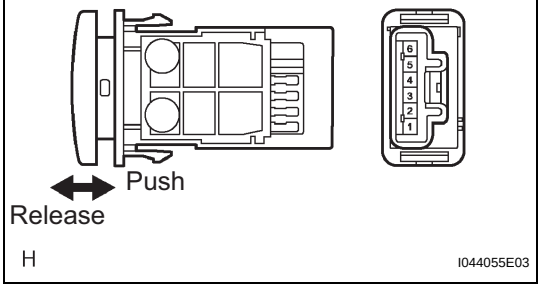

(a) Remove the AUTO LSD switch.
(b) Disconnect the AUTO LSD switch connector.
(c) Measure the resistance.
Standard resistance

Tester Connection	Switch Condition	Specified Condition
3 - 4	Released	10 kΩ or higher
3 - 4	Pushed in	Below 1 Ω

NG → **REPLACE AUTO LSD SWITCH**

OK

2 CHECK HARNESS AND CONNECTOR (SKID CONTROL ECU - AUTO LSD SWITCH)

Skid Control ECU (harness side connector):

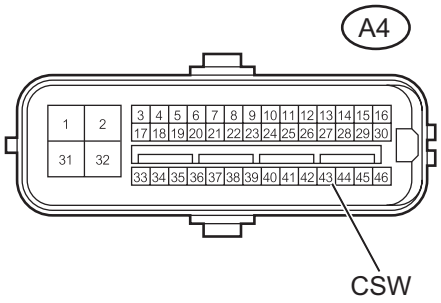

AUTO LSD Switch (harness side connector):

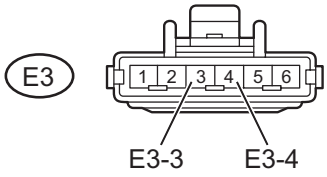

(a) Disconnect the skid control ECU connector.
(b) Disconnect the AUTO LSD connector.
(c) Measure the resistance.
Standard resistance

Tester Connection	Specified Condition
A4-43 (CSW) - E3-3	Below 1 Ω
A4-43 (CSW) - Body ground	10 kΩ or higher
E3-4 - Body ground	Below 1 Ω

NG → **REPAIR OR REPLACE HARNESS OR CONNECTOR**

OK

BC

3 CHECK HARNESS AND CONNECTOR (SKID CONTROL ECU - COMBINATION METER)

Skid Control ECU (haness side connector):

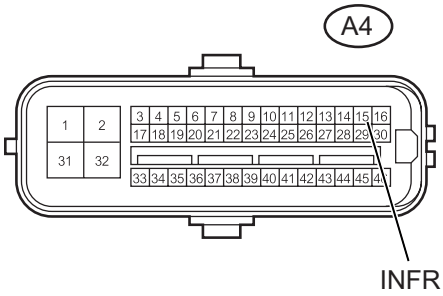

Combination Meter (harness side connector):

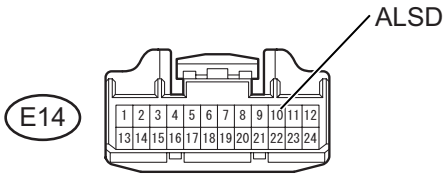

C135294E03

(a) Disconnect the skid control ECU connector.
(b) Disconnect the combination meter connector.
(c) Measure the resistance.

Standard resistance

Tester Connection	Specified Condition
A4-15 (INFR) - E14-10 (ALSD)	Below 1 Ω
A4-15 (INFR) - Body ground	10 kΩ or higher

NG → **REPAIR OR REPLACE HARNESS OR CONNECTOR**

OK

4 INSPECT COMBINATION METER ASSEMBLY

(a) Check the combination meter system (See page ME-29).

OK:

Combination meter is normal.

NG → **REPLACE COMBINATION METER ASSEMBLY**

OK

REPLACE MASTER CYLINDER SOLENOID

AUTO LSD Indicator Light does not Come ON

DESCRIPTION

See page BC-177.

WIRING DIAGRAM

See page BC-177.

BC

INSPECTION PROCEDURE

NOTICE:

When replacing the master cylinder solenoid, perform zero point calibration (See page BC-24).

1	CHECK AUTO LSD INDICATOR LIGHT

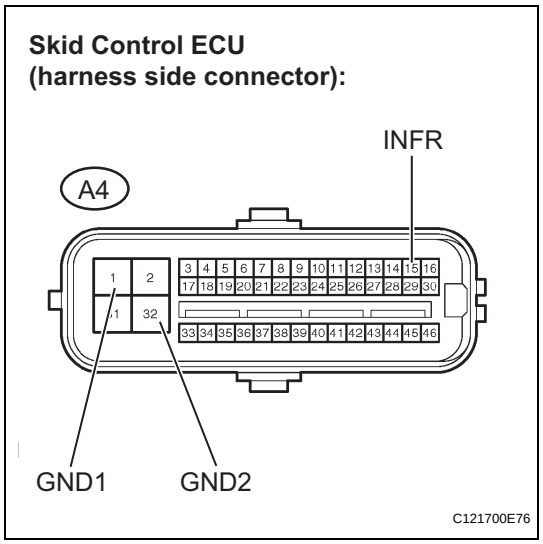

(a) Disconnect the skid control ECU connector.
(b) Turn the ignition switch on.
(c) Ground terminal INFR of the skid control ECU.
(d) Check the AUTO LSD indicator light.

OK

INFR - GND Condition	Illumination Condition
Connecting	ON
Disconnecting	OFF

OK → **REPLACE MASTER CYLINDER SOLENOID**

NG

BC

2 CHECK HARNESS AND CONNECTOR (SKID CONTROL ECU - COMBINATION METER)

Skid Control ECU (haness side connector):

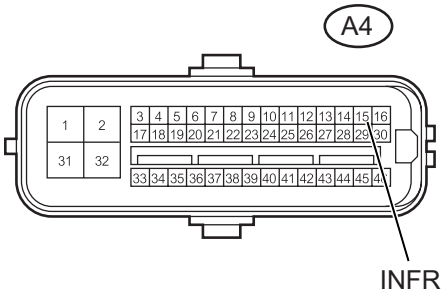

Combination Meter (harness side connector):

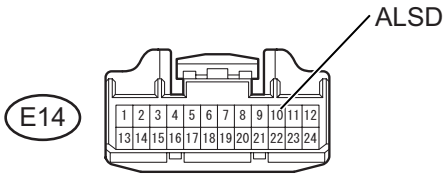

C135294E03

(a) Disconnect the skid control ECU connector.
(b) Disconnect the combination meter connector.
(c) Measure the resistance.

Standard resistance

Tester Connection	Specified Condition
A4-15 (INFR) - E14-10 (ALSD)	Below 1 Ω
A4-15 (INFR) - Body ground	10 kΩ or higher

NG → **REPAIR OR REPLACE HARNESS OR CONNECTOR**

OK

3 INSPECT COMBINATION METER ASSEMBLY

(a) Check the combination meter system (See page ME-29).

OK:

Combination meter is normal.

NG → **REPLACE COMBINATION METER ASSEMBLY**

OK

REPLACE MASTER CYLINDER SOLENOID

A-TRAC Indicator Light Remains ON

DESCRIPTION

This is the A-TRAC main switch circuit. When the A-TRAC switch is pushed on, the A-TRAC function is available and the A-TRAC indicator light illuminates.

HINT:

The A-TRAC does not operate even if the A-TRAC switch is pressed under the following conditions:

- TRAC or VSC system is faulty.
- Temperature inside the hydraulic brake booster increases and the A-TRAC operation is suspended.

WIRING DIAGRAM

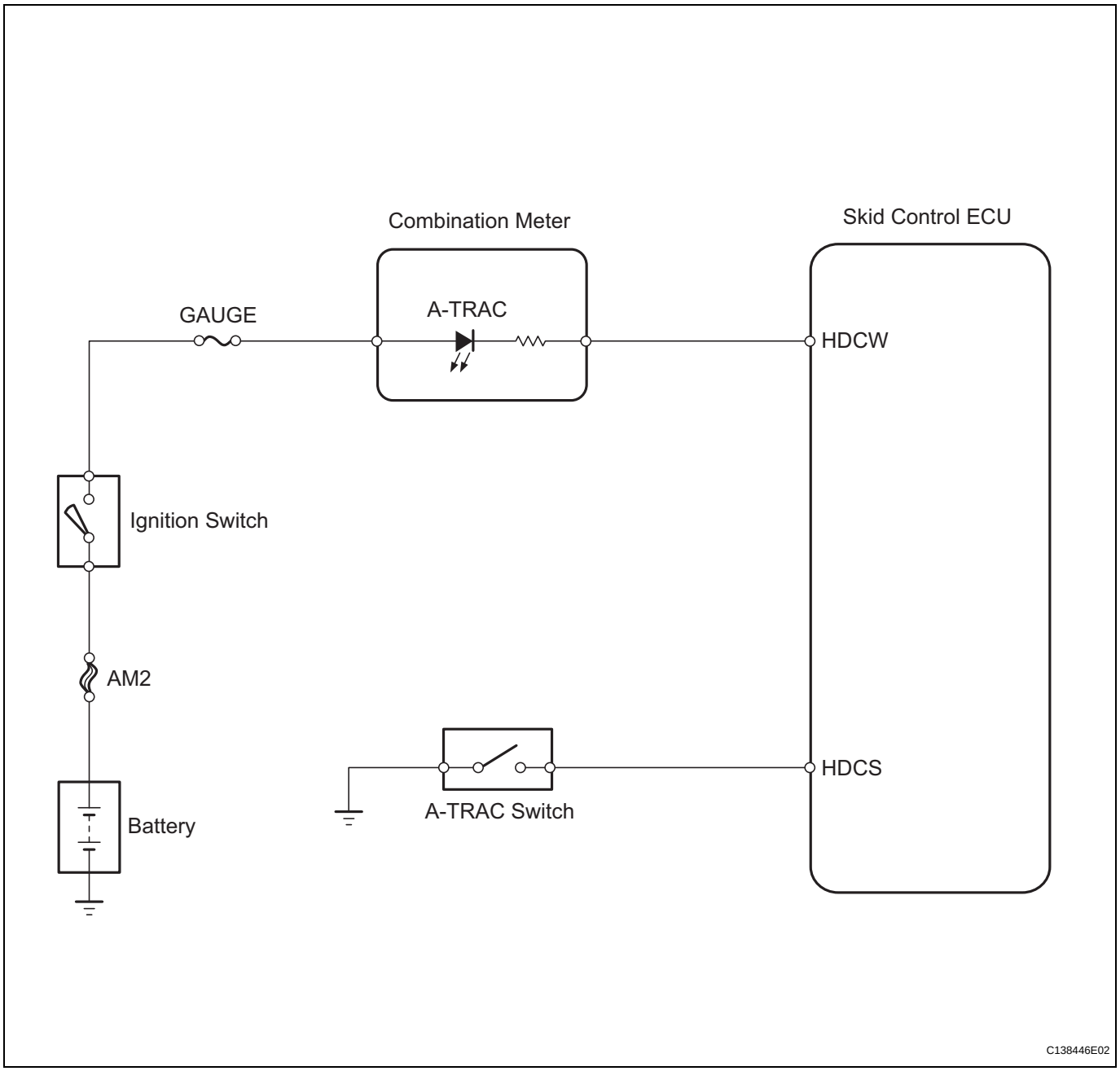

INSPECTION PROCEDURE

NOTICE:

When replacing the master cylinder solenoid, perform zero point calibration (See page BC-24).

BC

1	INSPECT A-TRAC SWITCH

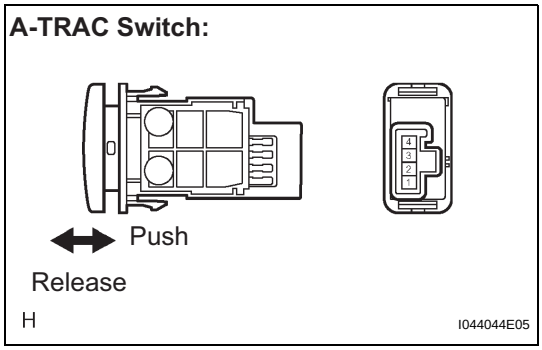

(a) Remove the A-TRAC switch.
(b) Disconnect the A-TRAC switch connector.
(c) Measure the resistance.

Standard resistance

Tester Connection	Switch Condition	Specified Condition
3 - 4	Released	10 kΩ or higher
3 - 4	Pushed in	Below 1 Ω

NG → **REPLACE A-TRAC SWITCH**

OK

2	CHECK HARNESS AND CONNECTOR (SKID CONTROL ECU - A-TRACK SWITCH)

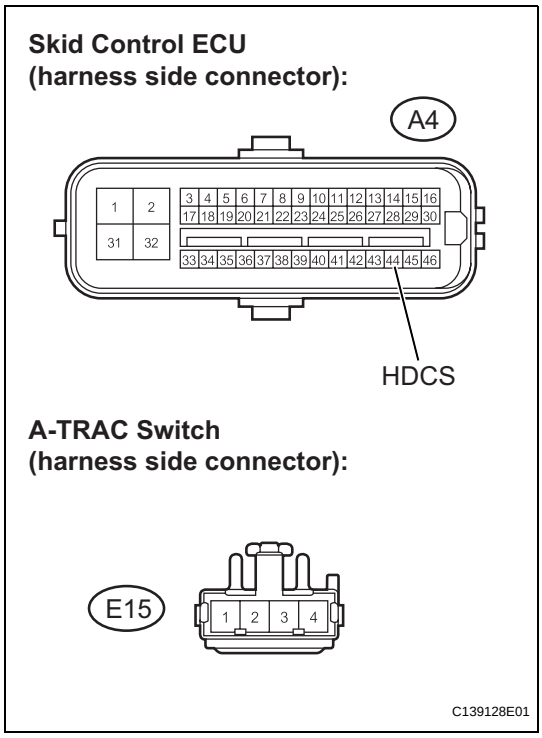

(a) Disconnect the skid control ECU connector.
(b) Disconnect the A-TRAC connector.
(c) Measure the resistance.

Standard resistance

Tester Connection	Specified Condition
A4-44 (HDCS) - E15-4	Below 1 Ω
A4-44 (HDCS) - Body ground	10 kΩ or higher
E15-4 - Body ground	Below 1 Ω

NG → **REPAIR OR REPLACE HARNESS OR CONNECTOR**

OK

3 CHECK HARNESS AND CONNECTOR (SKID CONTROL ECU - COMBINATION METER)

Skid Control ECU (haness side connector):

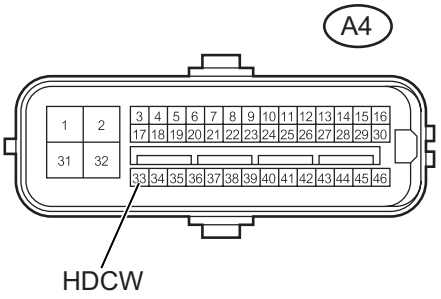

Combination Meter (harness side connector):

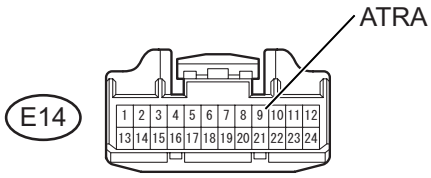

C135294E05

(a) Disconnect the skid control ECU connector.
(b) Disconnect the combination meter connector.
(c) Measure the resistance.
Standard resistance

Tester Connection	Specified Condition
A4-33 (HDCW) - E14-9	Below 1 Ω
A4-33 (HDCW) - Body ground	10 kΩ or higher

NG → **REPAIR OR REPLACE HARNESS OR CONNECTOR**

OK

4 INSPECT COMBINATION METER ASSEMBLY

(a) Check the combination meter system (See page ME-29).
OK:
Combination meter is normal.

NG → **REPLACE COMBINATION METER ASSEMBLY**

OK

REPLACE MASTER CYLINDER SOLENOID

BC

A-TRAC Indicator Light does not Come ON

DESCRIPTION

See page BC-182.

BC

WIRING DIAGRAM

See page BC-182.

INSPECTION PROCEDURE

NOTICE:

When replacing the master cylinder solenoid, perform zero point calibration (See page BC-24).

1	CHECK A-TRAC INDICATOR LIGHT

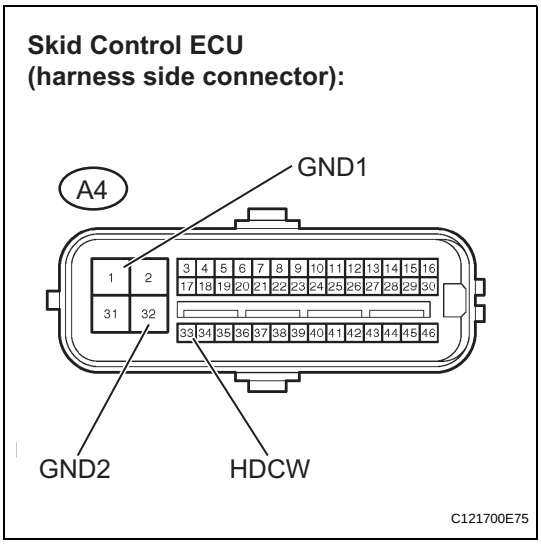

(a) Disconnect the skid control ECU connector.
(b) Turn the ignition switch on.
(c) Ground terminal HDCW of the skid control ECU.
(d) Check the A-TRAC indicator light.

OK

HDCW - GND Condition	Illumination Condition
Connecting	ON
Disconnecting	OFF

OK → **REPLACE MASTER CYLINDER SOLENOID**

NG

2 CHECK HARNESS AND CONNECTOR (SKID CONTROL ECU - COMBINATION METER)

Skid Control ECU (haness side connector):

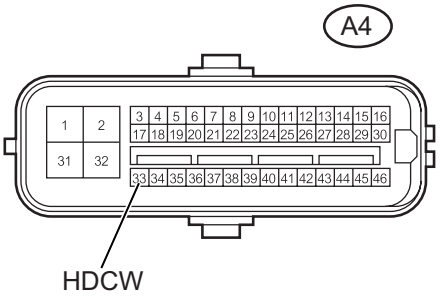

Combination Meter (harness side connector):

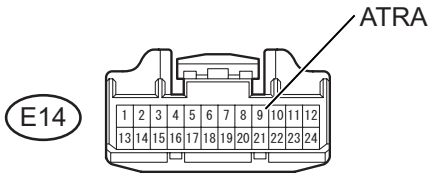

C135294E05

(a) Disconnect the skid control ECU connector.
(b) Disconnect the combination meter connector.
(c) Measure the resistance.

Standard resistance

Tester Connection	Specified Condition
A4-33 (HDCW) - E14-9 (ATRA)	Below 1 Ω
A4-33 (HDCW) - Body ground	10 kΩ or higher

NG → **REPAIR OR REPLACE HARNESS OR CONNECTOR**

OK

3 INSPECT COMBINATION METER ASSEMBLY

(a) Check the combination meter system (See page ME-29).

OK:

Combination meter is normal.

NG → **REPLACE COMBINATION METER ASSEMBLY**

OK

REPLACE COMBINATION METER ASSEMBLY

BC

Skid Control Buzzer Circuit

DESCRIPTION

The skid control buzzer sounds intermittently when the temperature of the actuator increases excessively during TRAC or A-TRAC system operation.

BC

This buzzer sounds continuously when a low pressure malfunction occurs in the accumulator.

WIRING DIAGRAM

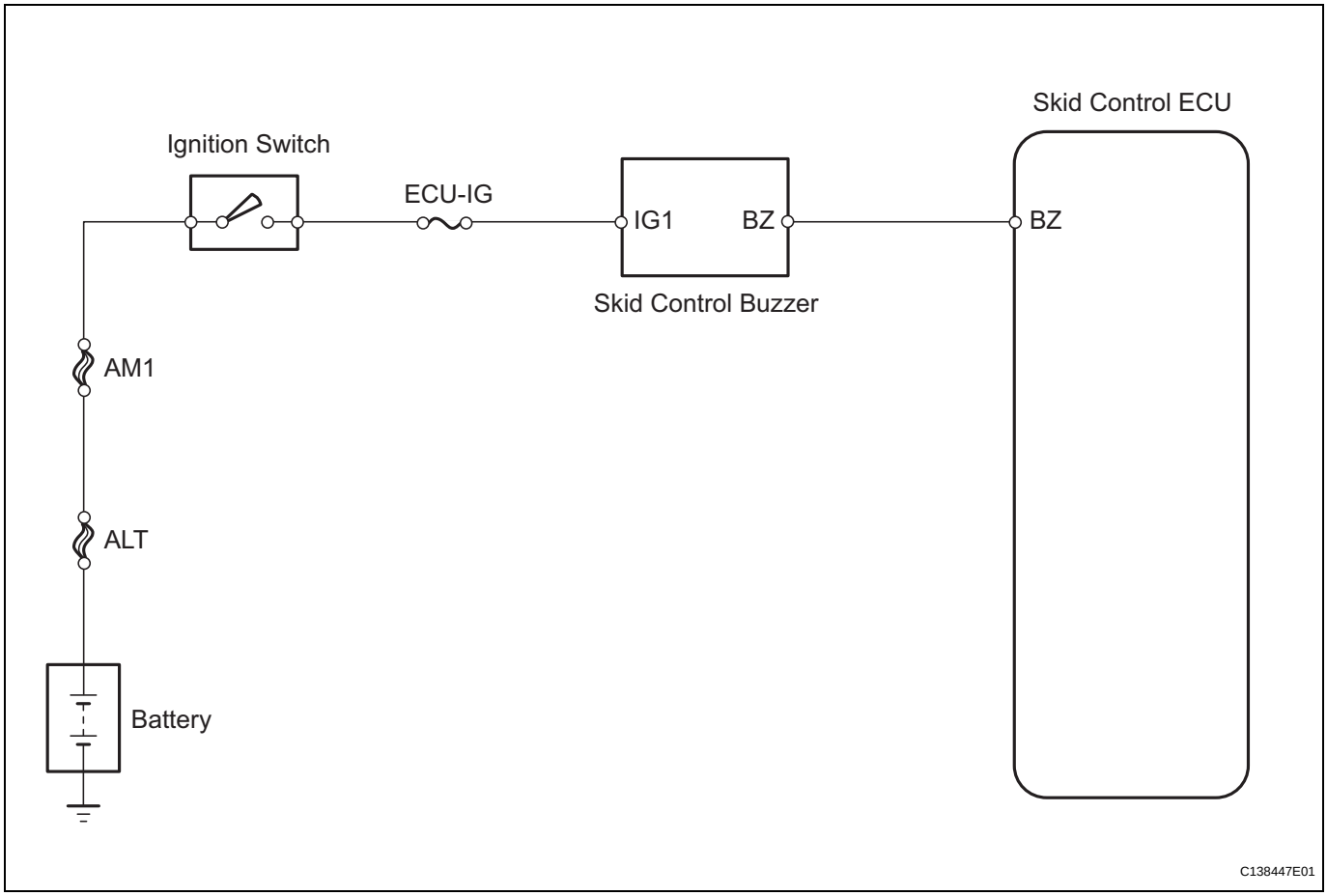

INSPECTION PROCEDURE

NOTICE:

When replacing the master cylinder solenoid, perform zero point calibration (See page BC-24).

1 PERFORM ACTIVE TEST USING INTELLIGENT TESTER (SKID CONTROL BUZZER)

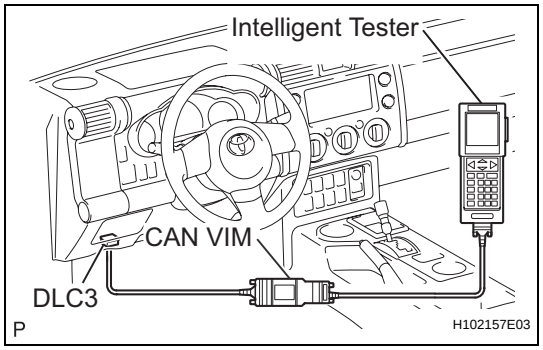

(a) Connect the intelligent tester to the DLC3.
(b) Start the engine.
(c) Select the item "VSC/BR WARN BUZ" in the ACTIVE TEST and operate the skid control buzzer on the intelligent tester.
Select the following menu items: DIAGNOSIS / OBD/ MOBD /select vehicle / ABS/VSC / ACTIVE TEST.

BC

ACTIVE TEST: ABS/VSC

Item	Vehicle Condition / Test Details	Diagnostic note
VSV / BR WARN BUZ	Turns skid control buzzer ON and OFF	Buzzer can be heard

(d) Check that the buzzer sounds/stops when the skid control buzzer is turned on/off by using the intelligent tester.

Result

Result	Proceed to
Buzzer does not sound or sounds constantly	A
Buzzer sounds/stops	B

B → CHECK FOR INTERMITTENT PROBLEMS

A

2 INSPECT SKID CONTROL BUZZER (POWER SOURCE CIRCUIT)

Skid Control Buzzer (harness side connector):

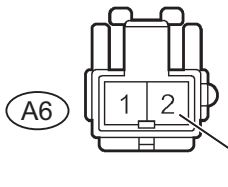

(a) Disconnect the skid control buzzer connector.
(b) Turn the ignition switch on.
(c) Measure the voltage.
Standard voltage

Tester Connection	Specified Condition
A6-2 (IG1) - Body ground	11 to 14 V

NG → REPAIR OR REPLACE HARNESS OR CONNECTOR (POWER SOURCE CIRCUIT)

OK

BC

3	INSPECT SKID CONTROL BUZZER ASSEMBLY

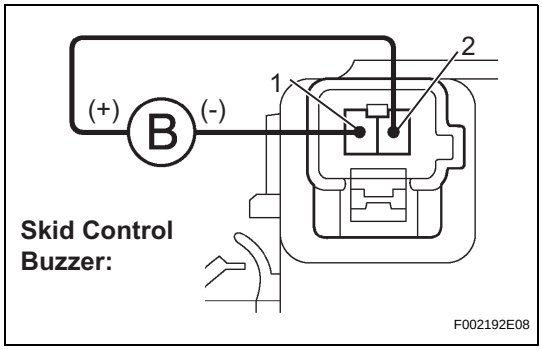

(a) Disconnect the skid control buzzer connector.
(b) Apply battery voltage to terminals 1 and 2 of the skid control buzzer connector, and check that the buzzer sounds.
OK:
The skid control buzzer sound should be heard.

NG → **REPLACE SKID CONTROL BUZZER ASSEMBLY**

OK

4	CHECK HARNESS AND CONNECTOR (SKID CONTROL BUZZER - SKID CONTROL ECU)

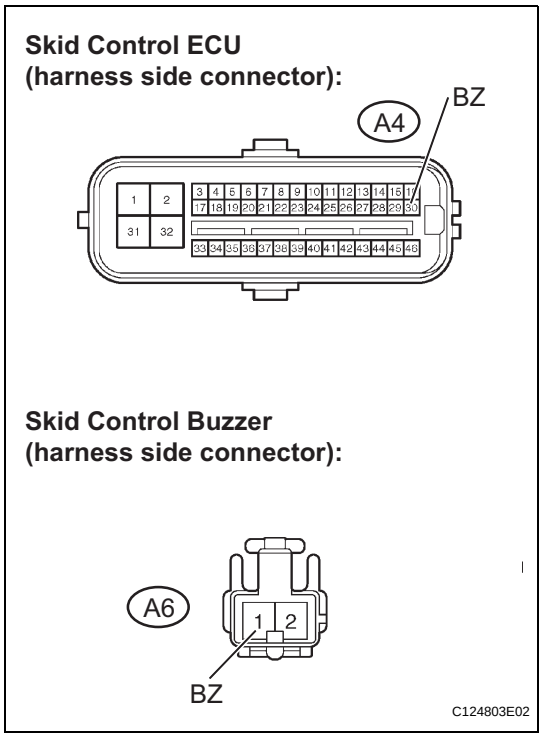

(a) Disconnect the skid control ECU connector.
(b) Disconnect the skid control buzzer connector.
(c) Measure the resistance.
Standard resistance

Tester Connection	Specified Condition
A4-30 (BZ) - A6-1 (BZ)	Below 1 Ω
A4-30 (BZ) - Body ground	10 kΩ or higher

NG → **REPAIR OR REPLACE HARNESS OR CONNECTOR**

OK

REPLACE MASTER CYLINDER SOLENOID

TC and CG Terminal Circuit

DESCRIPTION

Connecting terminals TC and CG of the DLC3 causes the ECU to display 2-digit DTCs by blinking the ABS and VSC TRAC warning lights.

BC

WIRING DIAGRAM

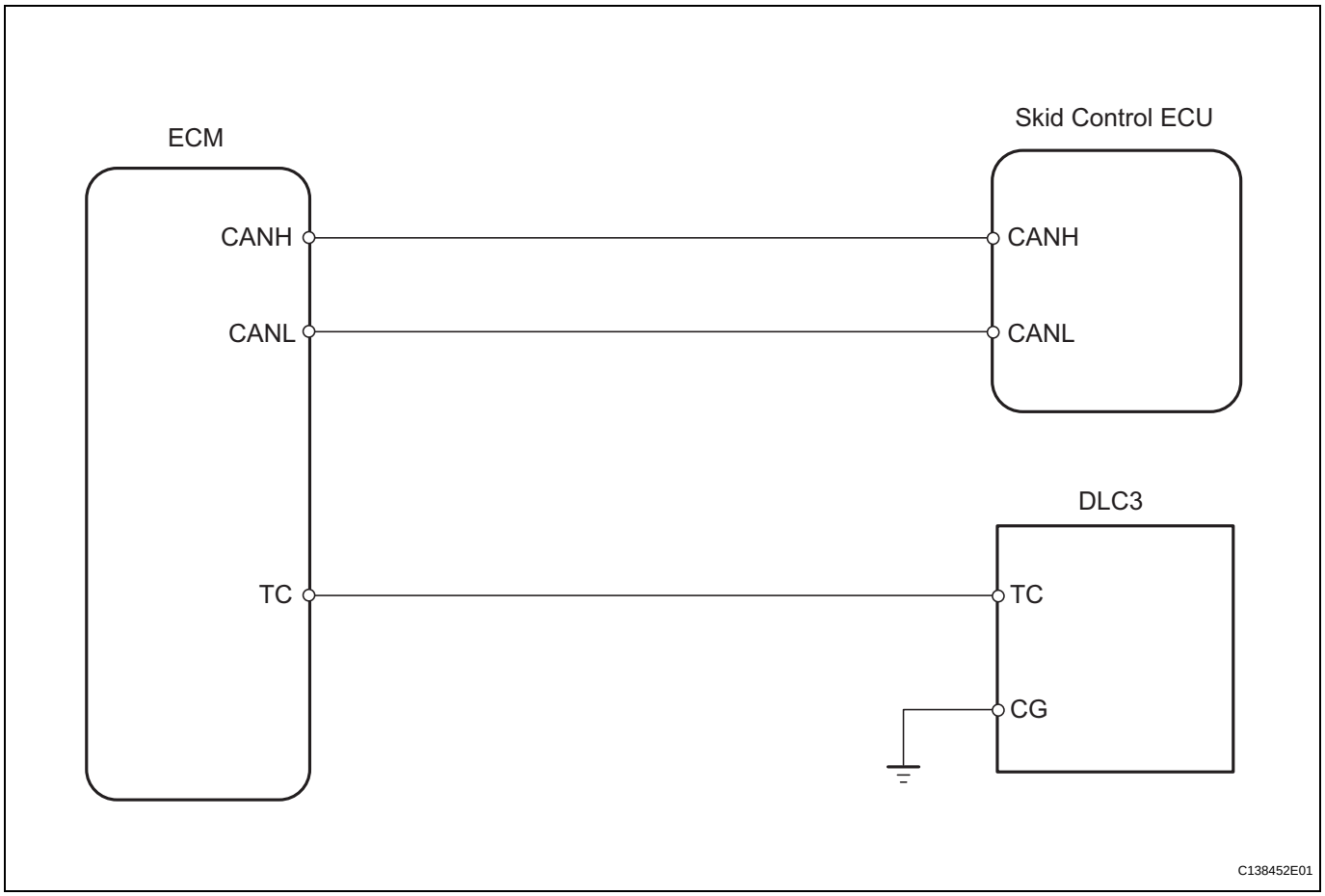

INSPECTION PROCEDURE

NOTICE:

When replacing the master cylinder solenoid, perform the zero point calibration (See page BC-24).

1	INSPECT DLC3 TERMINAL VOLTAGE (TC)

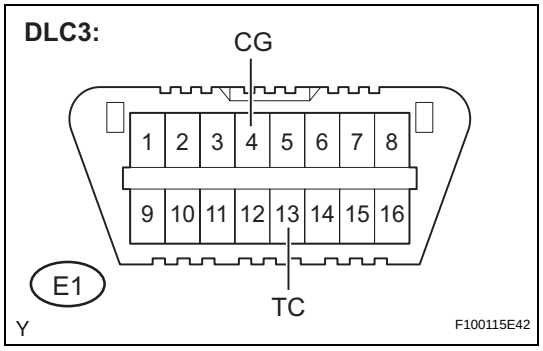

(a) Turn the ignition switch on.
(b) Measure the voltage.

Standard voltage

Tester Connection	Specified Condition
E1-13 (TC) - E1-4 (CG)	11 to 14 V

NG	Go to step 3

OK

2	CHECK CAN COMMUNICATION SYSTEM

BC

(a) Check whether CAN communication DTC(s) is output (See page CA-14).

Result

Result	Proceed to
DTC not output	A
DTC output	B

B → REPAIR CIRCUITS INDICATED BY OUTPUT DTCS

A

REPLACE MASTER CYLINDER SOLENOID

3	CHECK HARNESS AND CONNECTOR (DLC3 - BODY GROUND)

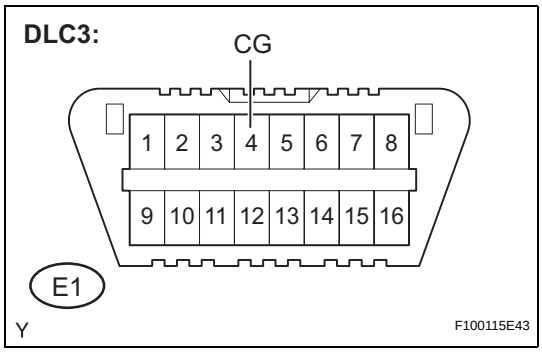

(a) Measure the resistance.
Standard resistance

Tester Connection	Specified Condition
E1-4 (CG) - Body ground	Below 1 Ω

NG → REPAIR OR REPLACE HARNESS OR CONNECTOR

OK

4 **CHECK HARNESS AND CONNECTOR (ECM - DLC3)**

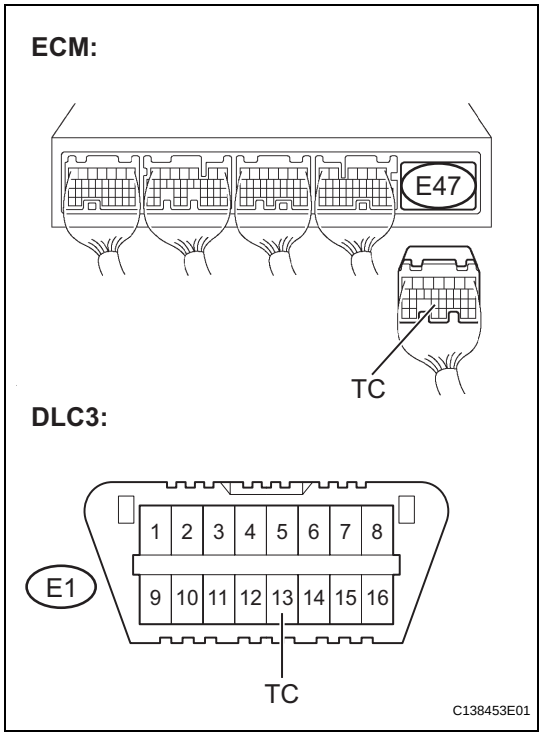

(a) Disconnect the ECM connector.
(b) Measure the resistance.
Standard resistance

Tester Connection	Specified Condition
E47-23 (TC) - E1-13 (TC)	Below 1 Ω
E1-13 (TC) - Body ground	10 kΩ or higher

NG → **REPAIR OR REPLACE HARNESS OR CONNECTOR**

OK

5 **CHECK ECM (DLC3 INPUT)**

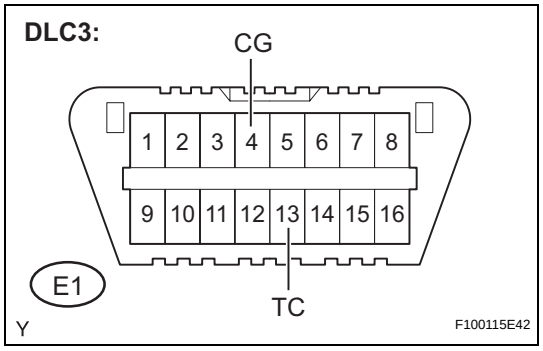

(a) Connect terminals TC and CG of the DLC3.
(b) Turn the ignition switch on.
(c) Check that the MIL is blinking.
OK:
MIL is blinking.

NG → **REPLACE ECM**

OK

REPLACE MASTER CYLINDER SOLENOID

TS and CG Terminal Circuit

DESCRIPTION

In sensor check mode, malfunctions of the speed sensor that cannot be detected when the vehicle is stopped are detected while driving.

BC

Transition to the sensor check mode can be performed by connecting terminals TS and CG of the DLC3 and turning the ignition switch from OFF to ON.

WIRING DIAGRAM

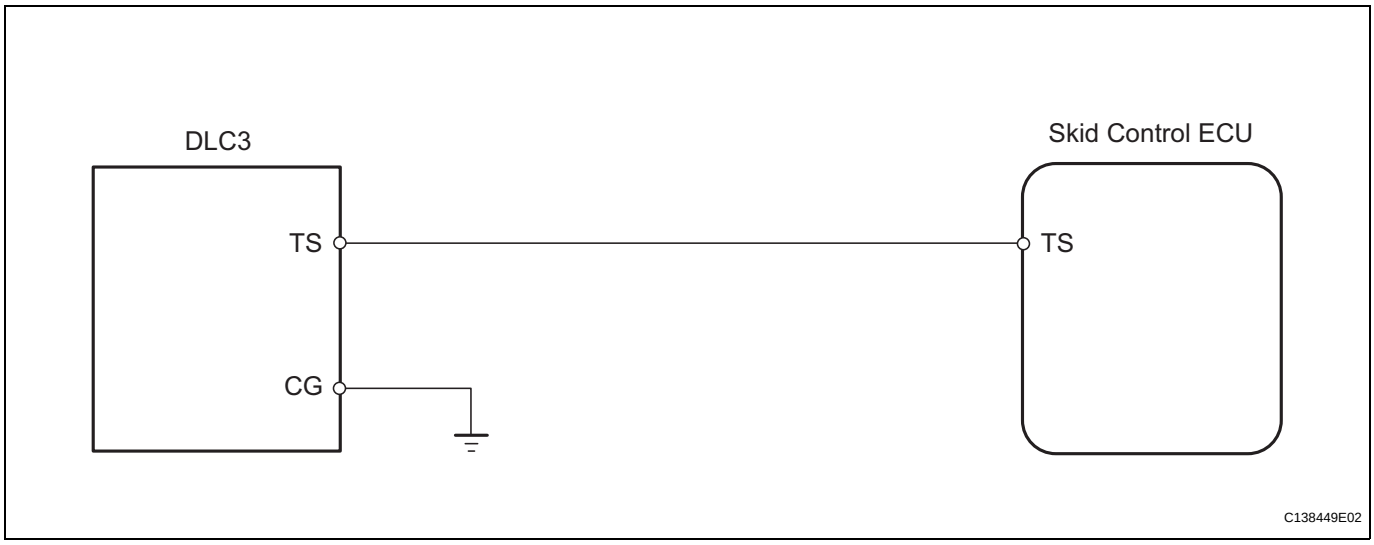

INSPECTION PROCEDURE

NOTICE:

When replacing the master cylinder solenoid, perform zero point calibration (See page BC-24).

1	INSPECT DLC3 TERMINAL VOLTAGE (TS)

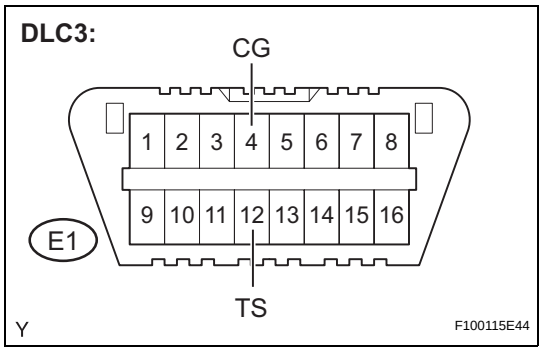

(a) Turn the ignition switch on.

(b) Measure the voltage.

Standard voltage

Tester Connection	Specified Condition
E1-12 (TS) - E1-4 (CG)	11 to 14 V

OK → **REPLACE MASTER CYLINDER SOLENOID**

NG

2 CHECK HARNESS AND CONNECTOR (SKID CONTROL ECU - DLC3)

Skid Control ECU (harness side connector):

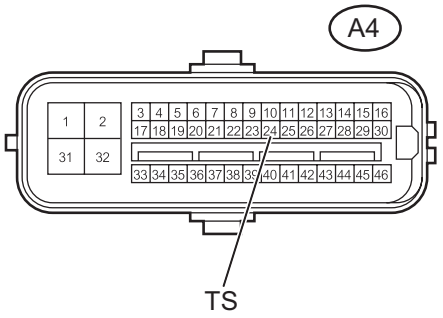

DLC3:

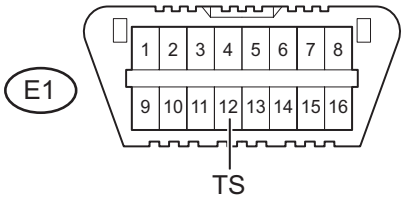

C138450E02

(a) Disconnect the skid control ECU connector.
(b) Measure the resistance.
Standard resistance

Tester Connection	Specified condition
A4-24 (TS) - E1-12 (TS)	Below 1 Ω
A4-24 (TS) - Body ground	10 kΩ or higher

NG → **REPAIR OR REPLACE HARNESS OR CONNECTOR**

OK

3 CHECK HARNESS AND CONNECTOR (BODY GROUND - DLC3)

DLC3:

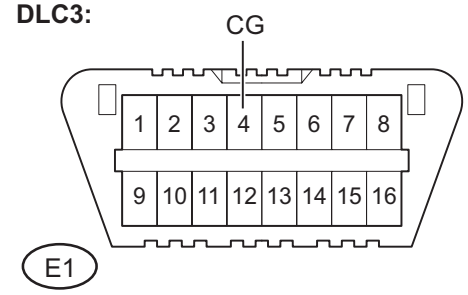

F100115E43

(a) Measure the resistance.
Standard resistance

Tester Connection	Specified condition
E1 (CG) - Body ground	Below 1 Ω

NG → **REPAIR OR REPLACE HARNESS OR CONNECTOR**

OK

REPLACE MASTER CYLINDER SOLENOID

BC

FRONT SPEED SENSOR

COMPONENTS

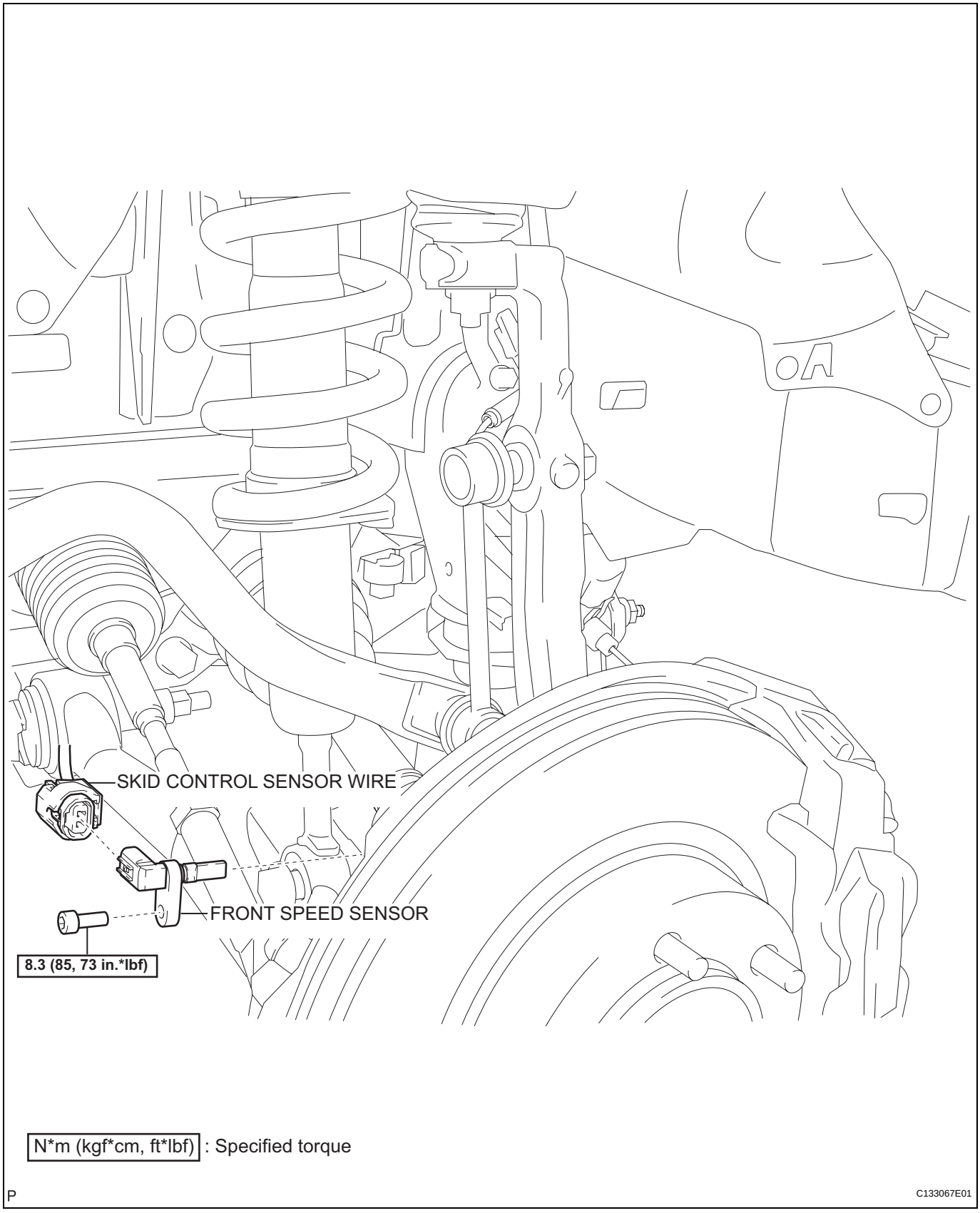

N*m (kgf*cm, ft*lbf) : Specified torque

P

C133067E01

BC

REMOVAL

1. DISCONNECT CABLE FROM NEGATIVE BATTERY TERMINAL

2. REMOVE FRONT WHEEL

3. REMOVE FRONT SPEED SENSOR

(a) Disconnect the skid control sensor wire.

(b) Using a 5 mm hexagon wrench, remove the bolt and the front speed sensor.

NOTICE:

- **Do not attach any foreign matter to the sensor tip.**
- **Ensure that no foreign matter enters the sensor installation part.**

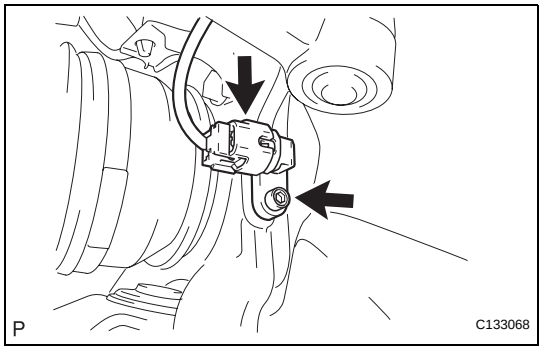

INSPECTION

1. INSPECT FRONT SPEED SENSOR

(a) Check the speed sensor.

If any of the following occurs, replace the speed sensor with a new one.

- The surface of the speed sensor is cracked, dented or chipped off.
- The connector is scratched, cracked or damaged.
- The speed sensor has been dropped.

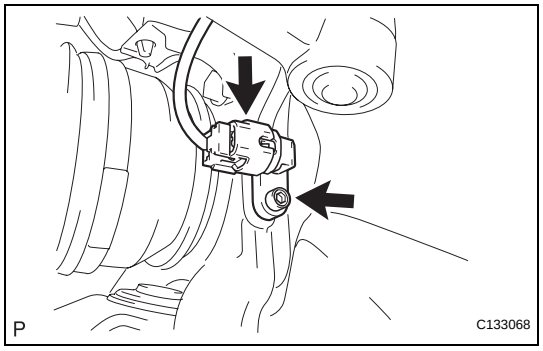

INSTALLATION

1. INSTALL FRONT SPEED SENSOR

(a) Using a 5 mm hexagon wrench, install the front speed sensor with the bolt.

Torque: 8.3 N*m (85 kgf*cm, 73 in.*lbf)

NOTICE:

Make sure that the sensor tip is clean.

(b) Connect the skid control sensor wire.

2. INSTALL FRONT WHEEL

Torque: 112 N*m (1,137 kgf*cm, 82 ft.*lbf)

3. CONNECT CABLE TO NEGATIVE BATTERY TERMINAL

Torque: 3.9 N*m (40 kgf*cm, 35 in.*lbf)

4. CHECK VSC SENSOR SIGNAL

(See page BC-28)

REAR SPEED SENSOR

COMPONENTS

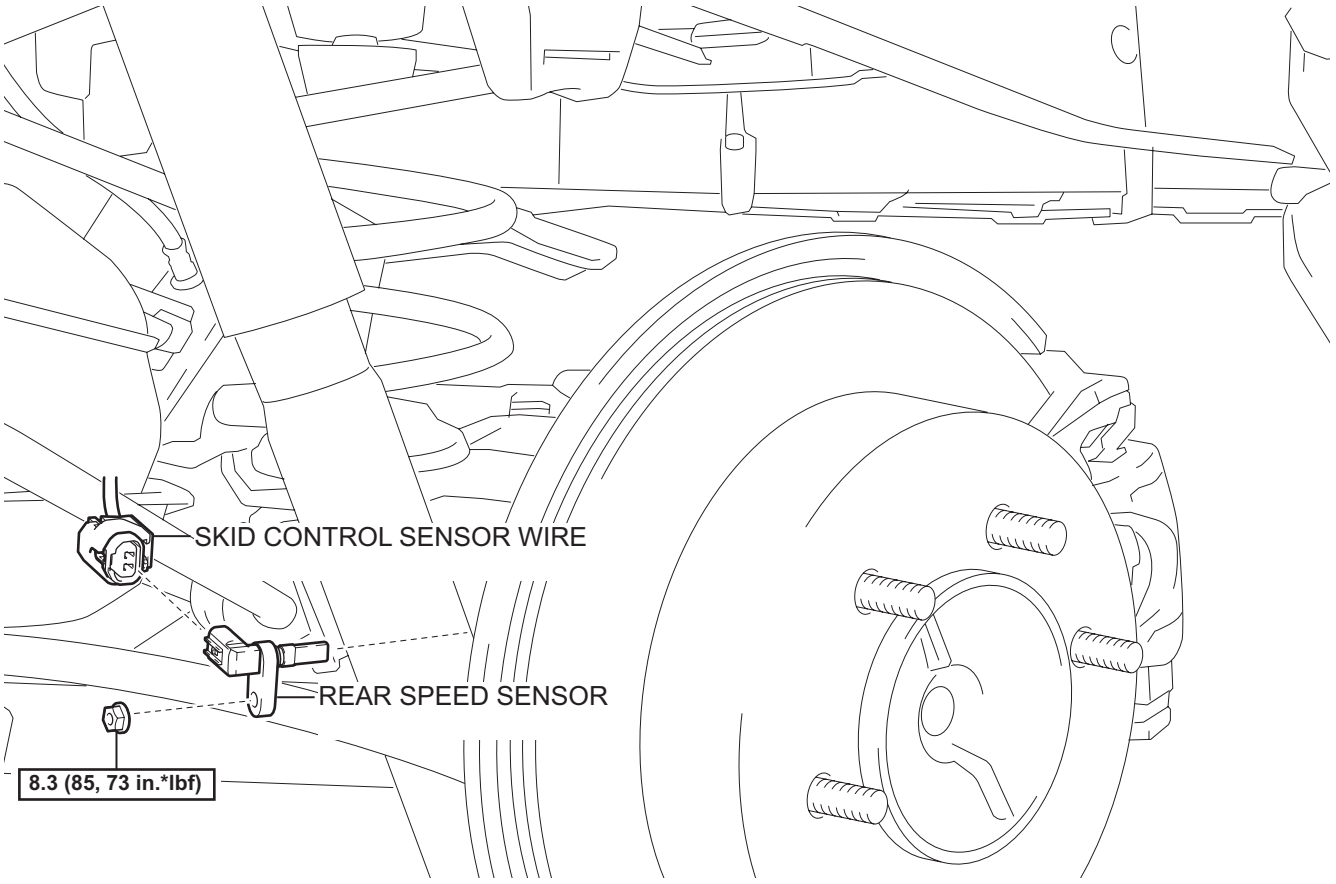

N*m (kgf*cm, ft*lbf) : Specified torque

P

C133070E01

BC

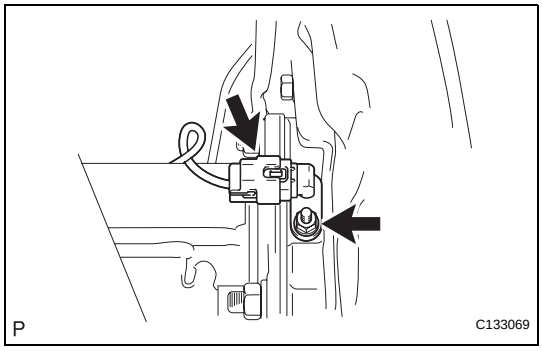

REMOVAL

1. **DISCONNECT CABLE FROM NEGATIVE BATTERY TERMINAL**
2. **REMOVE REAR WHEEL**
3. **REMOVE REAR SPEED SENSOR**
   (a) Disconnect the skid control sensor wire.
   (b) Remove the nut and rear speed sensor.
   NOTICE:
   - **Do not attach any foreign matter to the sensor tip.**
   - **Ensure that no foreign matter enters the sensor installation part.**

INSPECTION

1. INSPECT REAR SPEED SENSOR

(a) Check the speed sensor.
If any of the following occurs, replace the speed sensor with a new one.
- The surface of the speed sensor is cracked, dented or chipped off.
- The connector is scratched, cracked or damaged.
- The speed sensor has been dropped.

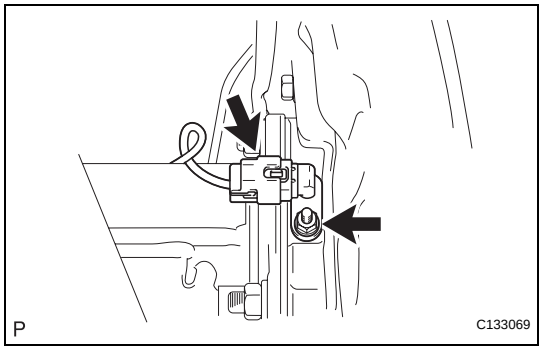

INSTALLATION

1. INSTALL REAR SPEED SENSOR

(a) Install the rear speed sensor with the nut.
Torque: 8.3 N*m (85 kgf*cm, 73 in.*lbf)
NOTICE:
Make sure that the sensor tip is clean.

(b) Connect the skid control sensor wire.

2. INSTALL REAR WHEEL
Torque: 112 N*m (1,137 kgf*cm, 82 ft.*lbf)

3. CONNECT CABLE TO NEGATIVE BATTERY TERMINAL
Torque: 3.9 N*m (40 kgf*cm, 35 in.*lbf)

4. CHECK VSC SENSOR SIGNAL
(See page BC-28)

YAW RATE AND DECELERATION SENSOR

COMPONENTS

for Automatic Transmission 2WD:

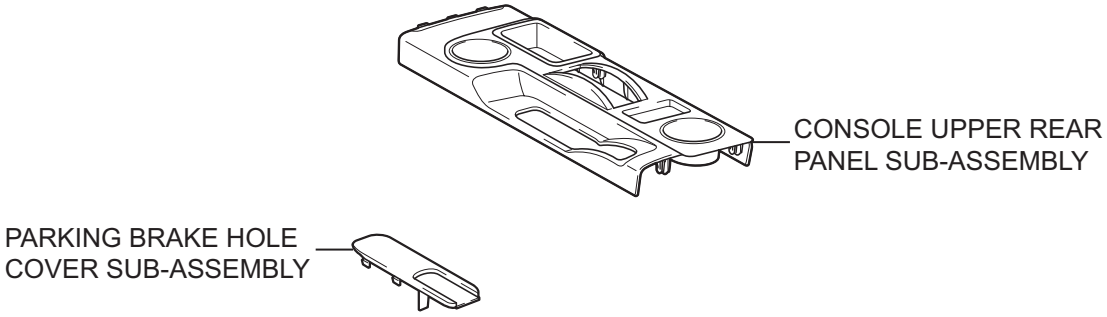

for Automatic Transmission 4WD:

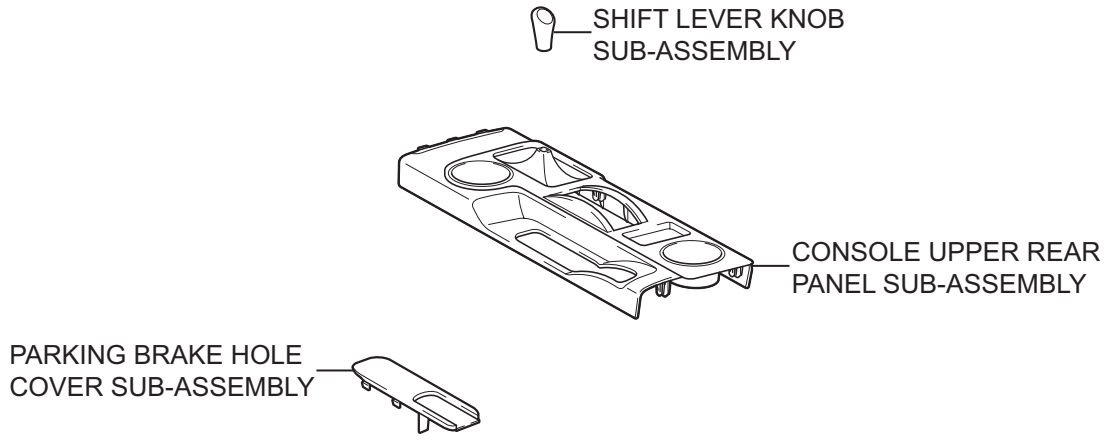

for Manual Transmission 4WD:

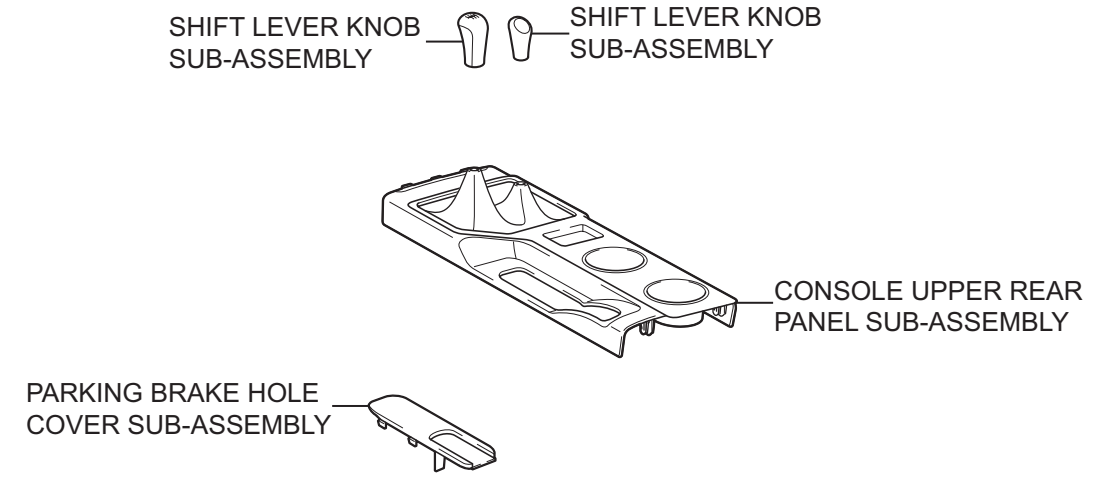

P

C133108E01

BC

for Automatic Transmission:

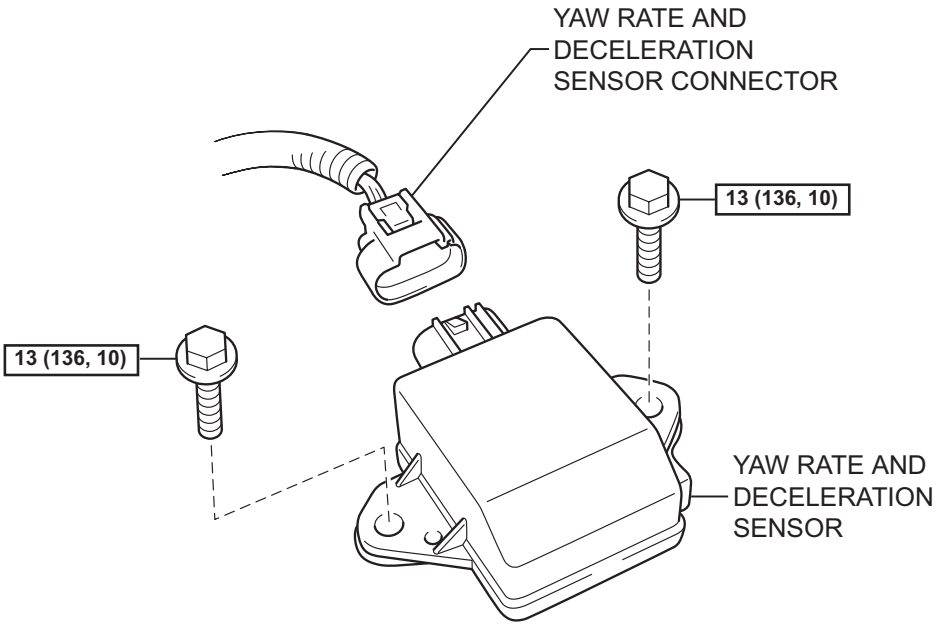

for Manual Transmission:

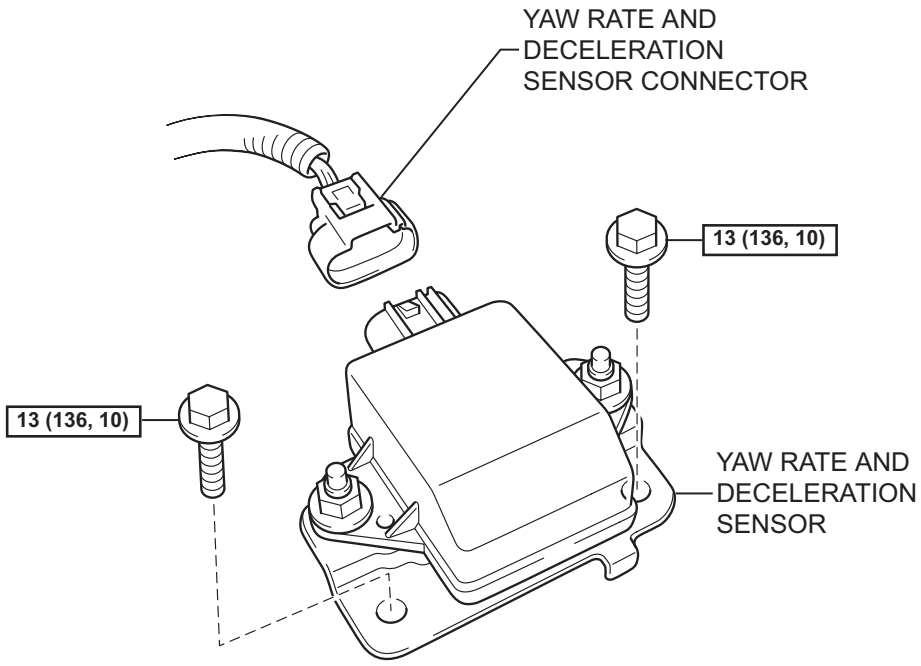

N*m (kgf*cm, ft*lbf) : Specified torque

N

C133071E01

REMOVAL

1. **DISCONNECT CABLE FROM NEGATIVE BATTERY TERMINAL**
2. **REMOVE PARKING BRAKE HOLE COVER SUB-ASSEMBLY (See page IP-11)**
3. **REMOVE SHIFT LEVER KNOB SUB-ASSEMBLY (for Manual Transmission) (See page IP-11)**
4. **REMOVE SHIFT LEVER KNOB SUB-ASSEMBLY (for 4WD) (See page IP-11)**
5. **REMOVE CONSOLE UPPER REAR PANEL SUB-ASSEMBLY (See page IP-12)**
6. **REMOVE YAW RATE AND DECELERATION SENSOR**
   (a) Disconnect the yaw rate and deceleration sensor connector.
   (b) Remove the 2 bolts and remove the yaw rate and deceleration sensor.

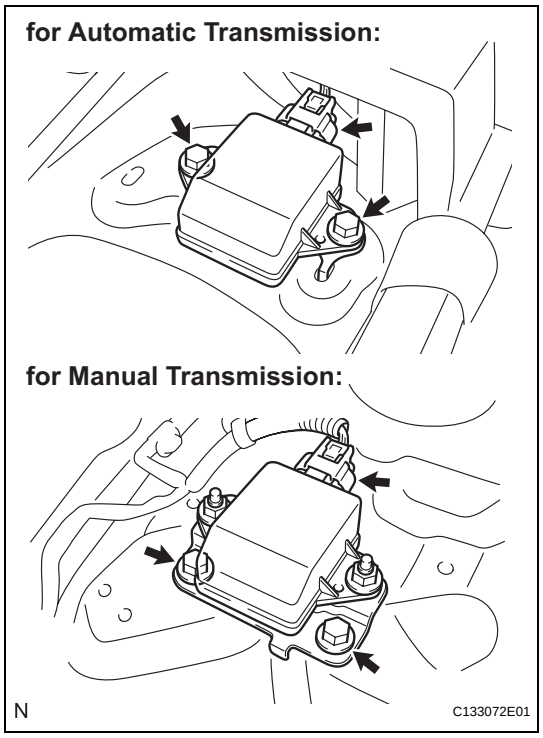

BC

INSPECTION

1. **INSPECT YAW RATE AND DECELERATION SENSOR**
   (a) Check the yaw rate and deceleration sensor.
   If any of the following occurs, replace the yaw rate and deceleration sensor with a new one.
   - The surface of the yaw rate and deceleration sensor is cracked, dented or chipped.
   - The connector is scratched, cracked, or damaged.
   - The yaw rate and deceleration sensor has been dropped.

INSTALLATION

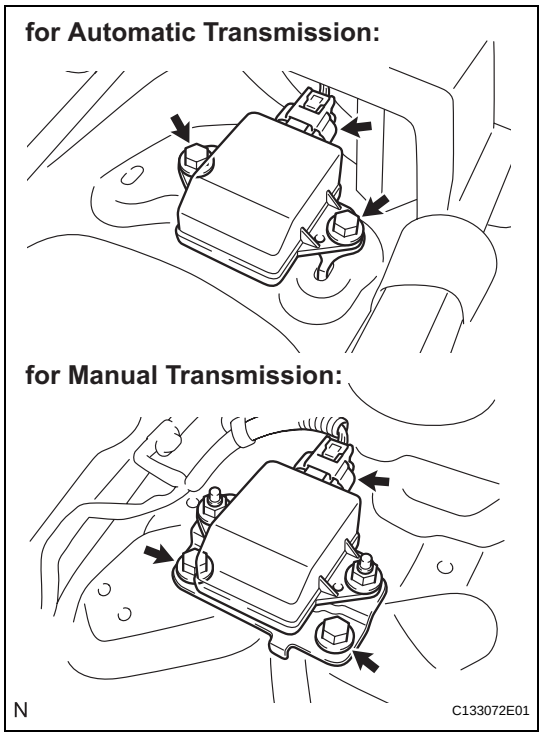

1. **INSTALL YAW RATE AND DECELERATION SENSOR**
   (a) Install the yaw rate and deceleration sensor with the 2 bolts.
   Torque: 13 N*m (136 kgf*cm, 10 ft.*lbf)
   NOTICE:
   Make sure that the sensor is at the correct angle when installing.
   (b) Connect the yaw rate and deceleration sensor connector.
2. **INSTALL CONSOLE UPPER REAR PANEL SUB-ASSEMBLY (See page IP-31)**
3. **INSTALL SHIFT LEVER KNOB SUB-ASSEMBLY (for 4WD) (See page IP-32)**
4. **INSTALL SHIFT LEVER KNOB SUB-ASSEMBLY (for Manual Transmission) (See page IP-32)**
5. **INSTALL PARKING BRAKE HOLE COVER SUB-ASSEMBLY (See page IP-32)**
6. **CONNECT CABLE TO NEGATIVE BATTERY TERMINAL**
   Torque: 3.9 N*m (40 kgf*cm, 35 in.*lbf)
7. **PERFORM YAW RATE SENSOR ZERO POINT CALIBRATION**
   (See page BC-24)
8. **CHECK VSC SENSOR SIGNAL**
   (See page BC-28)

STEERING ANGLE SENSOR

COMPONENTS

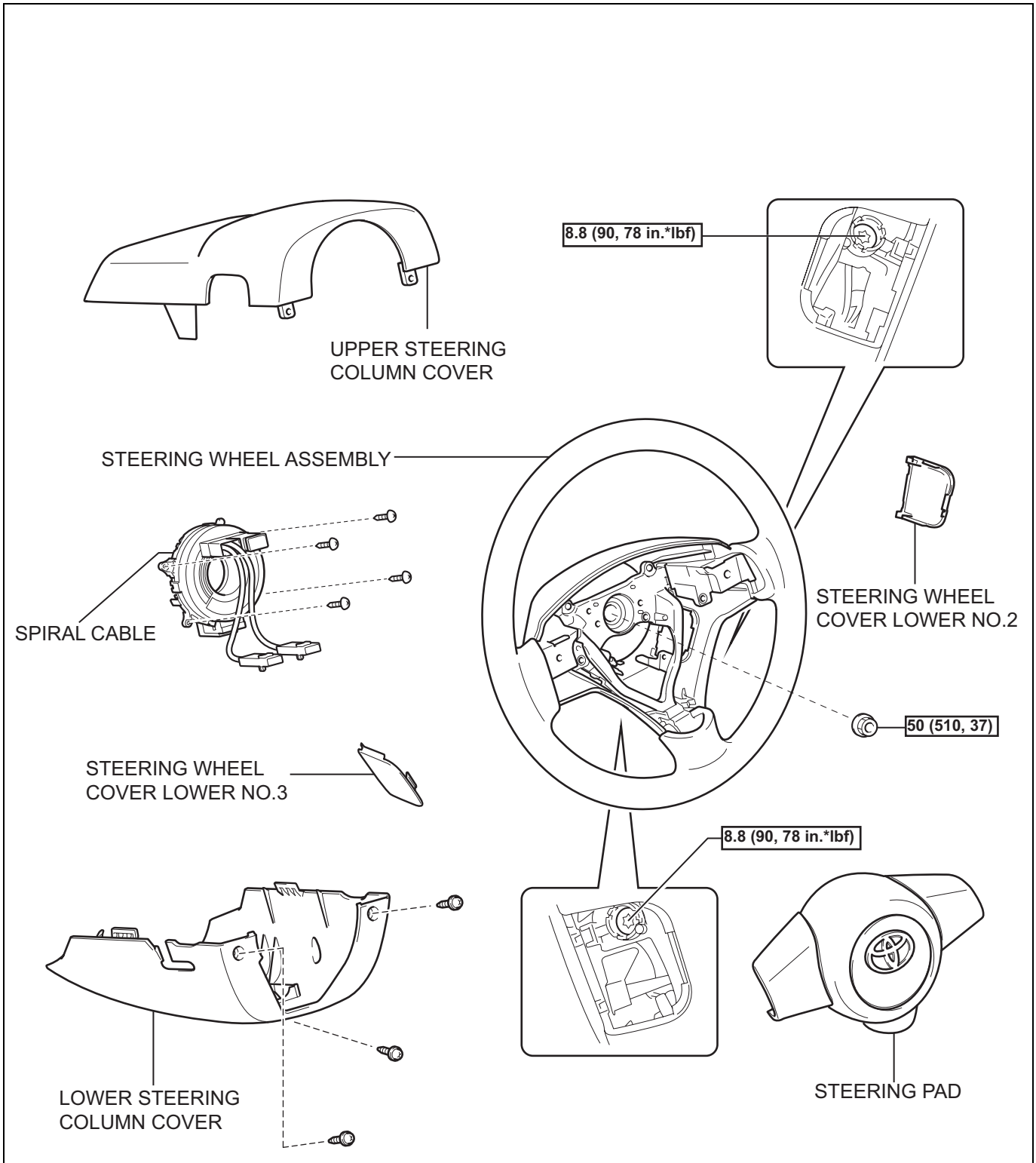

N*m (kgf*cm, ft.*lbf) : Specified torque

C128334E01

BC

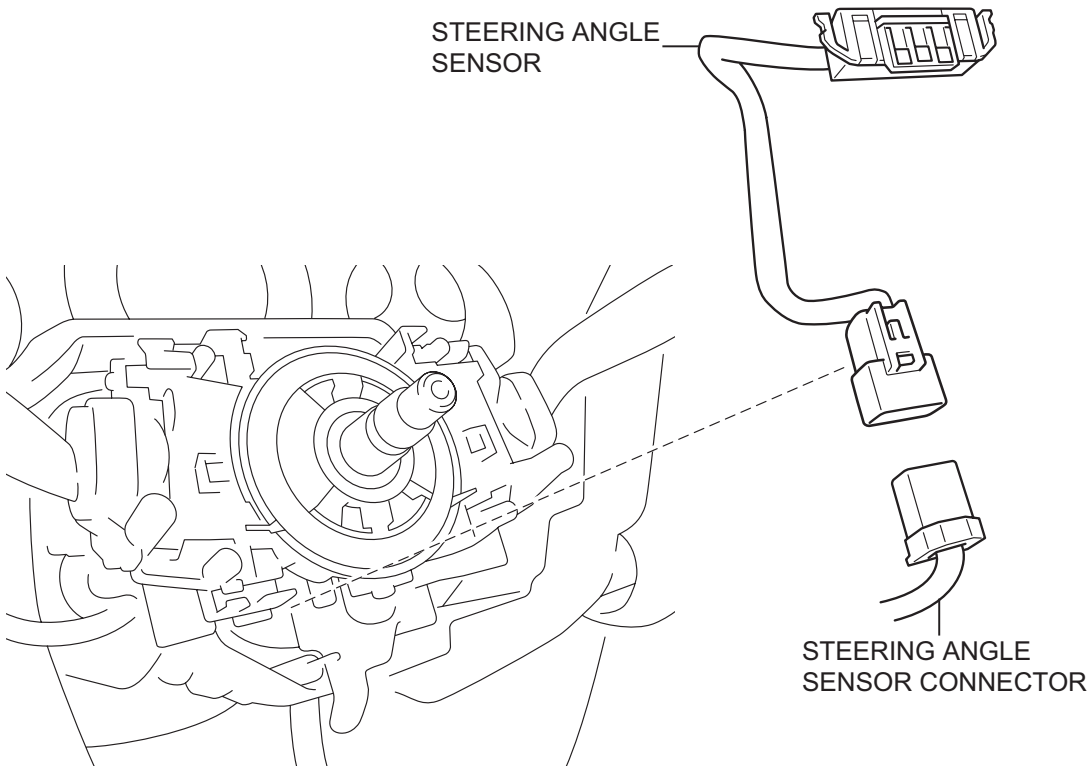

N

C133073E01

REMOVAL

1. **PRECAUTION**
   (See page RS-1)
2. **DISCONNECT CABLE FROM NEGATIVE BATTERY TERMINAL**
3. **PLACE FRONT WHEELS FACING STRAIGHT AHEAD**
4. **REMOVE STEERING WHEEL COVER LOWER NO.3 (See page RS-345)**
5. **REMOVE STEERING WHEEL COVER LOWER NO.2 (See page RS-345)**
6. **REMOVE STEERING PAD (See page RS-346)**
7. **REMOVE STEERING WHEEL ASSEMBLY (See page SR-8)**
8. **REMOVE LOWER STEERING COLUMN COVER (See page SR-8)**
9. **REMOVE UPPER STEERING COLUMN COVER (See page SR-8)**
10. **REMOVE SPIRAL CABLE (See page RS-357)**
11. **REMOVE STEERING ANGLE SENSOR**
    (a) Disconnect the steering angle sensor connector.
    (b) Disengage the claw and disconnect the steering angle sensor connector and harness.

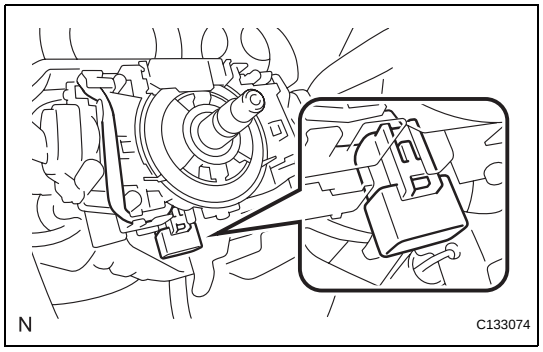

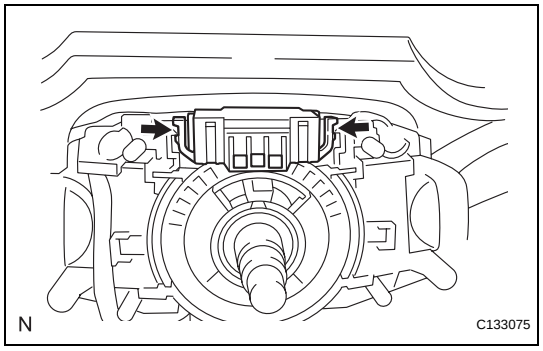

(c) Disengage the 2 claws and remove the steering angle sensor.

BC

INSPECTION

1. INSPECT STEERING ANGLE SENSOR

(a) Check the steering angle sensor.
If any of the following occurs, replace the steering angle sensor with a new one.
- The surface of the steering angle sensor is cracked, dented or chipped.
- The connector is scratched, cracked, or damaged.
- The steering angle sensor has been dropped.

INSTALLATION

1. **PRECAUTION**
   (See page RS-1)

2. **INSTALL STEERING ANGLE SENSOR**
   (a) Install the steering angle sensor.

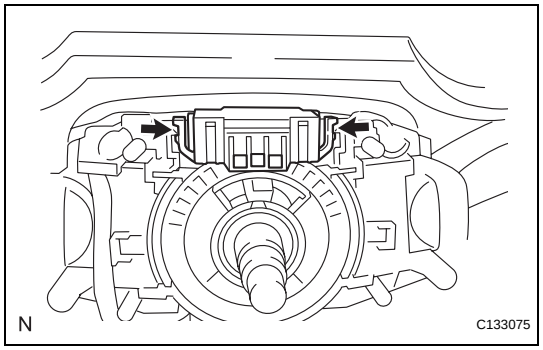

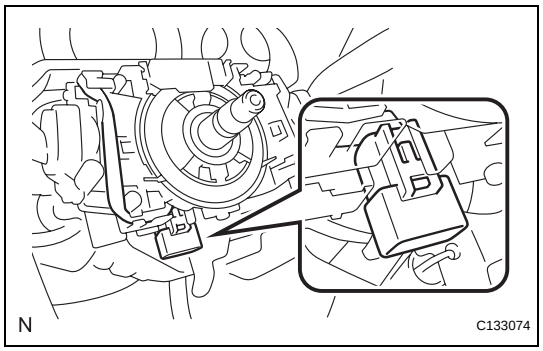

   (b) Connect the harness and steering angle sensor connector.
   (c) Connect the steering sensor connector.

3. **INSTALL SPIRAL CABLE (See page RS-358)**

4. **INSTALL UPPER STEERING COLUMN COVER (See page SR-17)**

5. **INSTALL LOWER STEERING COLUMN COVER (See page SR-18)**

6. **ADJUST SPIRAL CABLE (See page RS-359)**

7. **INSTALL STEERING WHEEL ASSEMBLY (See page SR-18)**

8. **INSPECT STEERING WHEEL CENTER POINT**

9. **INSTALL STEERING PAD (See page RS-346)**

10. **INSTALL STEERING WHEEL COVER LOWER NO.2 (See page RS-347)**

11. **INSTALL STEERING WHEEL COVER LOWER NO.3 (See page RS-347)**

12. **CONNECT CABLE TO NEGATIVE BATTERY TERMINAL**
    Torque: 3.9 N*m (40 kgf*cm, 35 in.*lbf)

13. **INSPECT STEERING PAD (See page RS-347)**

14. **PERFORM INITIALIZATION**
    (See page IN-31)

15. **INSPECT SRS WARNING LIGHT**
    (See page RS-29)

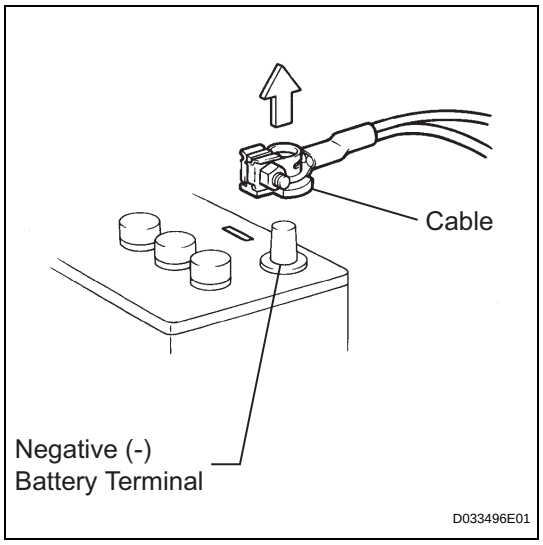

CAN COMMUNICATION SYSTEM

PRECAUTION

1. DISCONNECT AND RECONNECT CABLE OF NEGATIVE BATTERY TERMINAL

(a) Before performing electronic work, disconnect the cable from the negative (-) battery terminal in order to prevent it from shorting and burning out.

(b) When disconnecting and reconnecting the battery cable, turn the ignition switch OFF and headlight dimmer switch OFF. Then loosen the terminal nut completely. Be careful not to damage the cable or terminal.

(c) When the battery cable is disconnected, the settings of the clock and radio, memory of DTCs, etc. are erased. Before disconnecting the battery cable, take notes of the settings and memory.

NOTICE:

When disconnecting the cable from the negative (-) battery terminal, initialize the following system(s) after the cable is reconnected.

System Name	See procedure
Meter / gauge system	See page ME-10

2. PRECAUTION

(a) Turn the ignition switch OFF before measuring the resistances of the CAN main wire and the CAN branch wire.

(b) After the ignition switch is turned off, check that the key reminder warning system is not in operation.

(c) Before measuring the resistance, leave the vehicle as is for at least 1 minute and do not operate the ignition switch, any other switches or the doors. If doors need to be opened in order to check connectors, open the doors and leave them open.

HINT:

Operating the ignition switch, any switches or any doors triggers related ECU and sensor communication with the CAN, which causes resistance variation.

3. STEERING SYSTEM HANDLING PRECAUTIONS

(a) Care must be taken when replacing parts. Incorrect replacement could affect the performance of the steering system and result in hazards when driving.

4. SRS AIRBAG SYSTEM HANDLING PRECAUTIONS

(a) This vehicle is equipped with an SRS (Supplemental Restraint System) such as the driver airbag and front passenger airbag. Failure to carry out service operations in the correct sequence could cause unexpected SRS deployment during servicing and may lead to a serious accident. Before servicing (including removal or installation of parts, inspection or replacement), be sure to read the precautionary notice for the Supplemental Restraint System (See page RS-1).

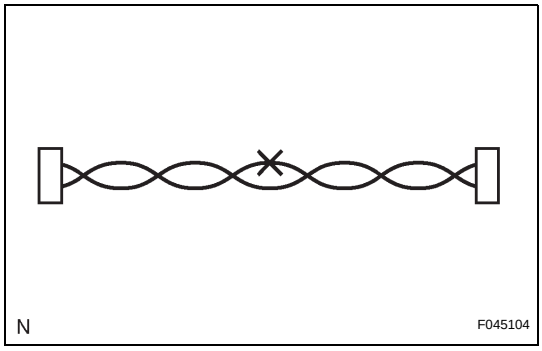

5. BUS LINE REPAIR

(a) After repairing the bus line with solder, wrap the repaired part with vinyl tape (See page IN-44).

NOTICE:

- **The CANL bus line and CANH bus line must always be installed together.**
- **When installing, twist them together.**
- **CAN bus lines are likely to be influenced by noise if the bus lines are not twisted together.**
- **The difference in length between the CANL bus line and CANH bus line should be less than 100 mm (3.937 in.).**
- **Leave approximately 80 mm (3.150 in.) loose in the twisted wires around the connectors.**

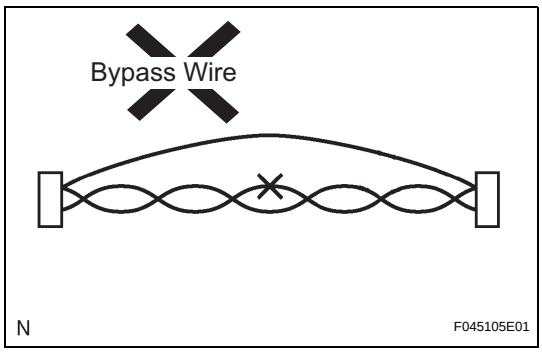

(b) Do not use bypass wiring between the connectors.

NOTICE:

The feature of the twisted wire harness will be lost if bypass wiring is used.

6. CONNECTOR HANDLING

(a) When inserting tester probes into a connector, insert them from the rear of the connector.

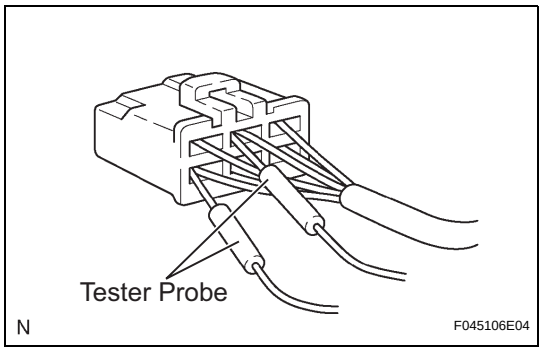

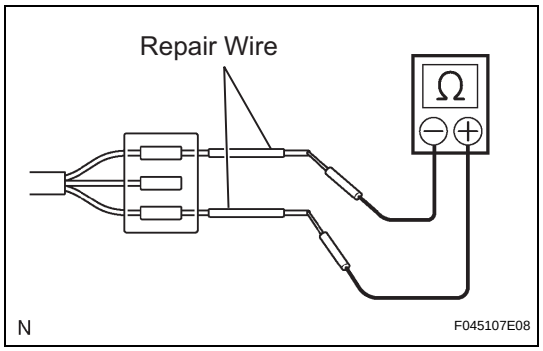

(b) Use a repair wire to check the connector if it is impossible to check the resistance from the rear of the connector.

PARTS LOCATION

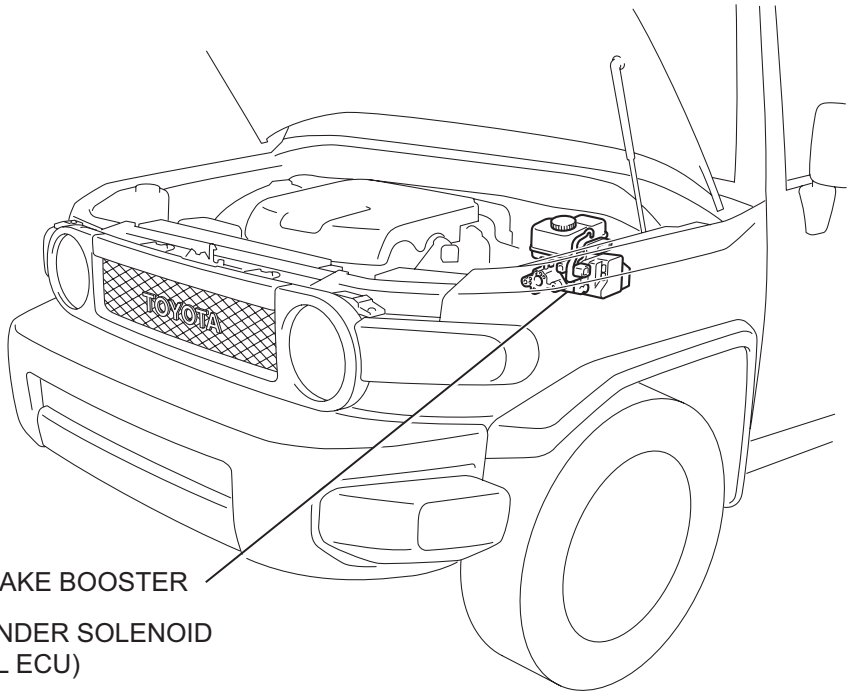

HYDRAULIC BRAKE BOOSTER

- MASTER CYLINDER SOLENOID
(SKID CONTROL ECU)

C136075E01

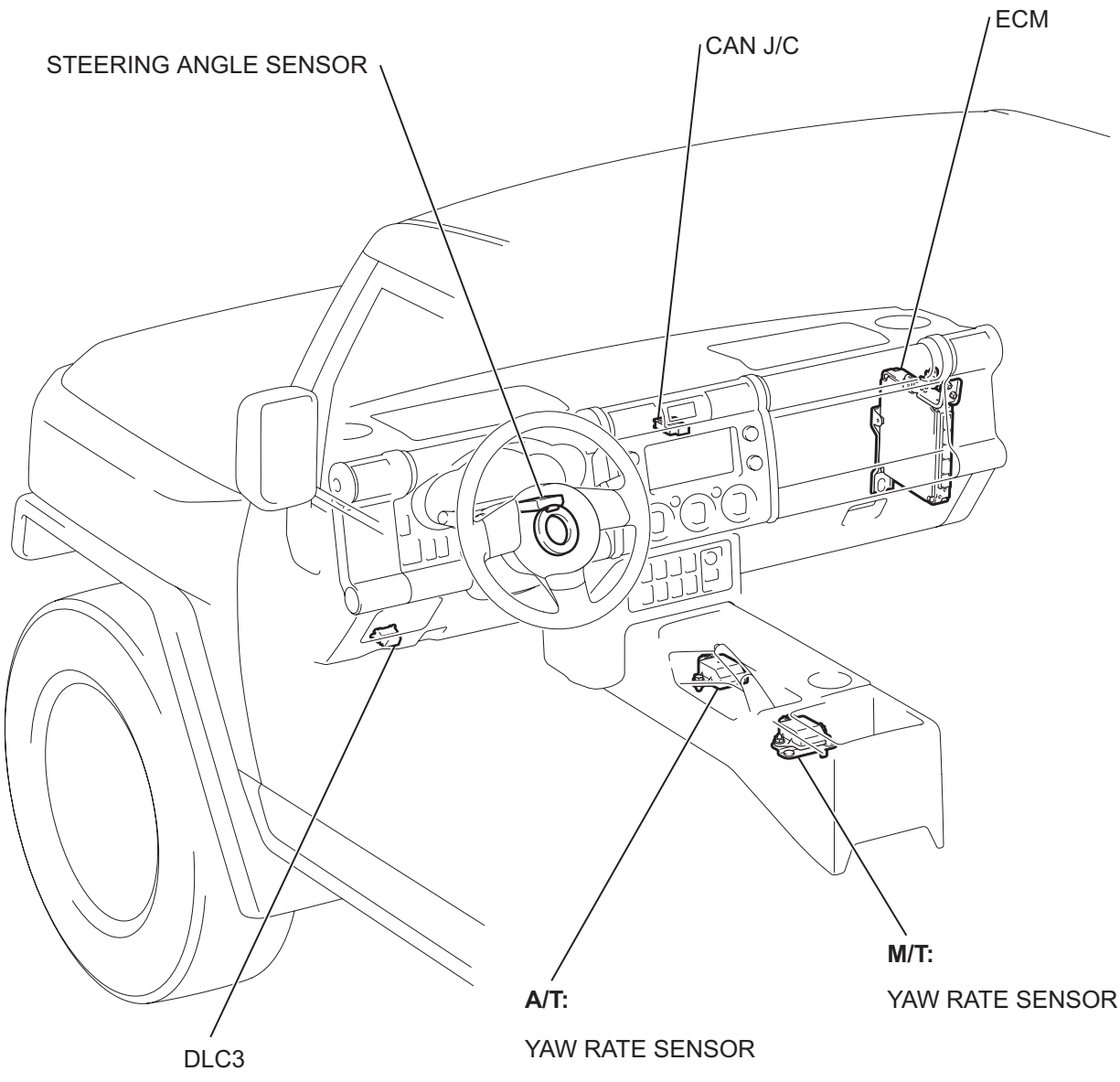
STEERING ANGLE SENSOR
CAN J/C
ECM
DLC3
A/T:
YAW RATE SENSOR
M/T:
YAW RATE SENSOR
C136845E01

SYSTEM DIAGRAM

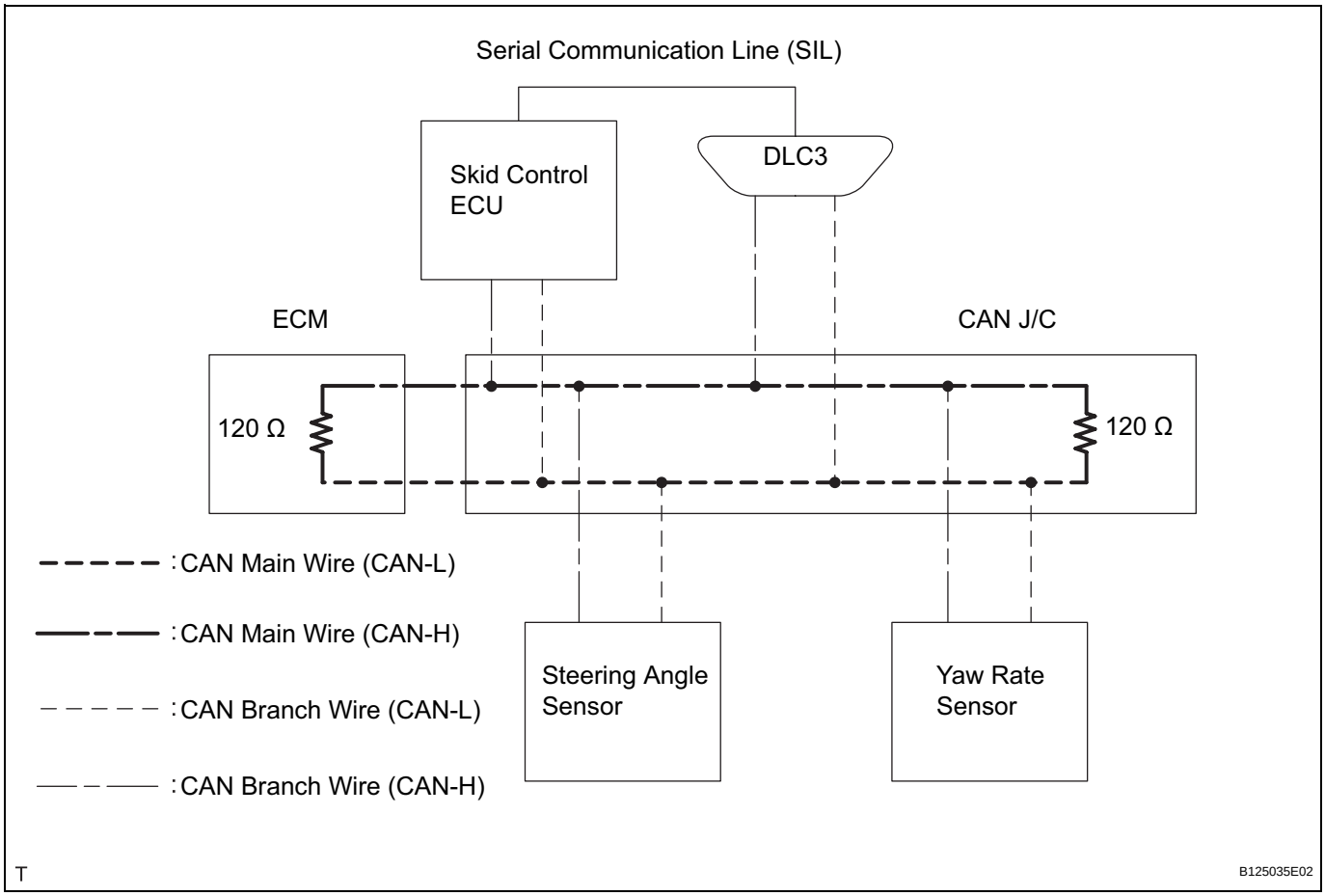

HINT:
The skid control ECU stores DTCs and performs DTC communication by receiving information from the steering sensor and yaw rate sensor. These sensors cannot store DTCs or perform DTC communication.

SYSTEM DESCRIPTION

1. BRIEF DESCRIPTION

(a) The CAN (Control Area Network) is a serial data communication system for real time application. It is a vehicle multiplex communication system which has a high communication speed (500 kbps) and the ability to detect malfunctions.

(b) By pairing the CANH and CANL bus lines, the CAN performs communication based on differential voltages.

(c) Many ECUs (sensors) installed on the vehicle operate by sharing information and communicating with each other.

(d) The CAN has two 120 Ω resistors which are necessary to communicate with the main wire.

2. DEFINITION OF TERMS

(a) Main wire

(1) The main wire is a wire harness between the two terminus circuits on the bus (communication line). This is the main bus in the CAN communication system.

(b) Branch wire

(1) The branch wire is a wire harness which diverges from the main wire to an ECU or a sensor.

(c) Terminus circuit

(1) The terminus circuit is a circuit which converts the communication current of the CAN communication into the bus voltage. It consists of a resistor and condenser. Two terminus circuits are necessary on a bus.

(d) CAN J/C

(1) The CAN J/C is a junction designed for CAN communication, which contains terminus circuits.

3. ECUs OR SENSORS WHICH COMMUNICATE VIA CAN COMMUNICATION SYSTEM

(a) Skid control ECU

(b) ECM

(c) Steering angle sensor

(d) Yaw rate sensor

4. DIAGNOSTIC CODES FOR CAN COMMUNICATION SYSTEM

(a) DTCs for the CAN communication system are as follows: U0073, U0100, U0123, U0124 and U0126.

5. NOTES REGARDING TROUBLESHOOTING

(a) Trouble in the CAN bus (communication line) can be checked through the DLC3 (except when there is a wire break other than in the branch wire of the DLC3).

NOTICE:

Do not connect the tester directly to the DLC3 connector. Be sure to use a service wire.

(b) DTCs regarding the CAN communication system can be checked using the intelligent tester via the CAN VIM.

(c) The CAN communication system cannot detect trouble in the branch wire of the DLC3 even though the DLC3 is also connected to the CAN communication system.

HOW TO PROCEED WITH TROUBLESHOOTING

NOTICE:

- **DTCs for the CAN communication system are as follows: U0073, U0100, U0123, U0124 and U0126.**
- **Refer to the troubleshooting section for each system if DTCs regarding the CAN communication system are not output.**
- **Turn the ignition switch off before measuring the resistances of the CAN main wire and the CAN branch wire.**
- **After the ignition switch is turned off, check that the key reminder warning system is not in operation.**
- **Before measuring the resistance, leave the vehicle as is for at least 1 minute and do not operate the ignition switch, any other switches or the doors. If doors need to be opened in order to check connectors, open the doors and leave them open.**
  HINT:
  Operating the ignition switch, any switches or any doors triggers related ECU and sensor communication with the CAN, which causes resistance variation.

1	**CHECK CAN BUS LINE**

(a) Check CAN bus line (See page CA-25).

NEXT

2	**CHECK INSTALLED SYSTEMS (ECUs AND SENSORS) THAT ADOPT CAN COMMUNICATION**

NEXT

3	**CHECK AND CLEAR DTCs**

NEXT

4	**CHECK CAN COMMUNICATION USING INTELLIGENT TESTER VIA CAN VIM**

(a) Select "BUS CHECK" (See page CA-14).

Result

All ECUs and sensors connected to CAN communication system displayed on screen.	A
One ECU or sensor connected to CAN communication system not displayed on screen.	B
2 or more ECUs and sensors connected to CAN communication system not displayed on screen.	C

NOTICE:

- **The systems (ECUs and sensors) that adopt CAN communication vary depending on the vehicle and option settings. Check which systems (ECUs and sensors) are installed on the vehicle (See page CA-14).**
- **Non-installed ECUs or sensors are not displayed. Do not mistake them for being in communication stop mode.**
- **If 2 or more ECUs or sensors are not displayed on the intelligent tester via the CAN VIM, perform troubleshooting for an open in one side of the CAN bus line for each undisplayed ECU or sensor.**

B	GO TO COMMUNICATION STOP MODE TABLE
C	GO TO OPEN IN ONE SIDE OF CAN BRANCH WIRE

A

5	DTC COMBINATION TABLE

(a) Confirm trouble according to the combination of output DTCs regarding the CAN communication system.
HINT:
Previous CAN communication system DTCs may be the cause if CAN communication system DTCs are output and all ECUs and sensors connected to the CAN communication system are displayed on the intelligent tester's "BUS CHECK" screen via the CAN VIM.

NEXT

6	INSPECT CIRCUIT

NEXT

7	IDENTIFY PROBLEM

NEXT

8	REPAIR OR REPLACE

NEXT

9	**PERFORM CONFIRMATION TEST**

NEXT

END

PROBLEM SYMPTOMS TABLE

RESULT LIST OF CHECK CAN BUS LINE

Symptom	Suspected area	See page
Open in CAN Main Wire	Check CAN Main Wire for Disconnection	CA-28
Short in CAN Bus Line	Check CAN Bus Lines for Short Circuit	CA-31
Short to +B in CAN Bus Line	Check CAN Bus line for Short to +B	CA-41
Short to GND in CAN Bus Line	Check CAN Bus line for Short to GND	CA-50
Open in One Side of CAN Branch Wire	Check for an Open in One Side of the CAN Branch Wire	CA-60

COMMUNICATION STOP MODE TABLE

Symptom	Suspected area	See page
"ENGINE" not displayed on intelligent tester via CAN VIM	ECM Communication Stop Mode	CA-23
"ABS/VSC/TRAC" not displayed on intelligent tester via CAN VIM	Skid Control ECU Communication Stop Mode	CA-17
"STEERING_SENSOR" not displayed on intelligent tester via CAN VIM	Steering Angle Sensor Communication Stop Mode	CA-19
"YAW DECELERATE" not displayed on intelligent tester via CAN VIM	Yaw Rate Sensor Communication Stop Mode	CA-21

TERMINALS OF ECU

NOTICE:

- **Turn the ignition switch off before measuring the resistances of the CAN main wire and the CAN branch wire.**
- **After the ignition switch is turned off, check that the key reminder warning system is not in operation.**
- **Before measuring the resistance, leave the vehicle as is for at least 1 minute and do not operate the ignition switch, any other switches or the doors. If doors need to be opened in order to check connectors, open the doors and leave them open.**

  HINT:

  Operating the ignition switch, any switches or any doors triggers related ECU and sensor communication with the CAN, which causes resistance variation.

1. CAN JUNCTION CONNECTOR

(a) CAN J/C connectors.

HINT:

- The connectors connected to the CAN J/C can be distinguished by the colors of the bus lines and the connecting side of the connector.
- E62, E63, E64 and E65 are interchangeable.

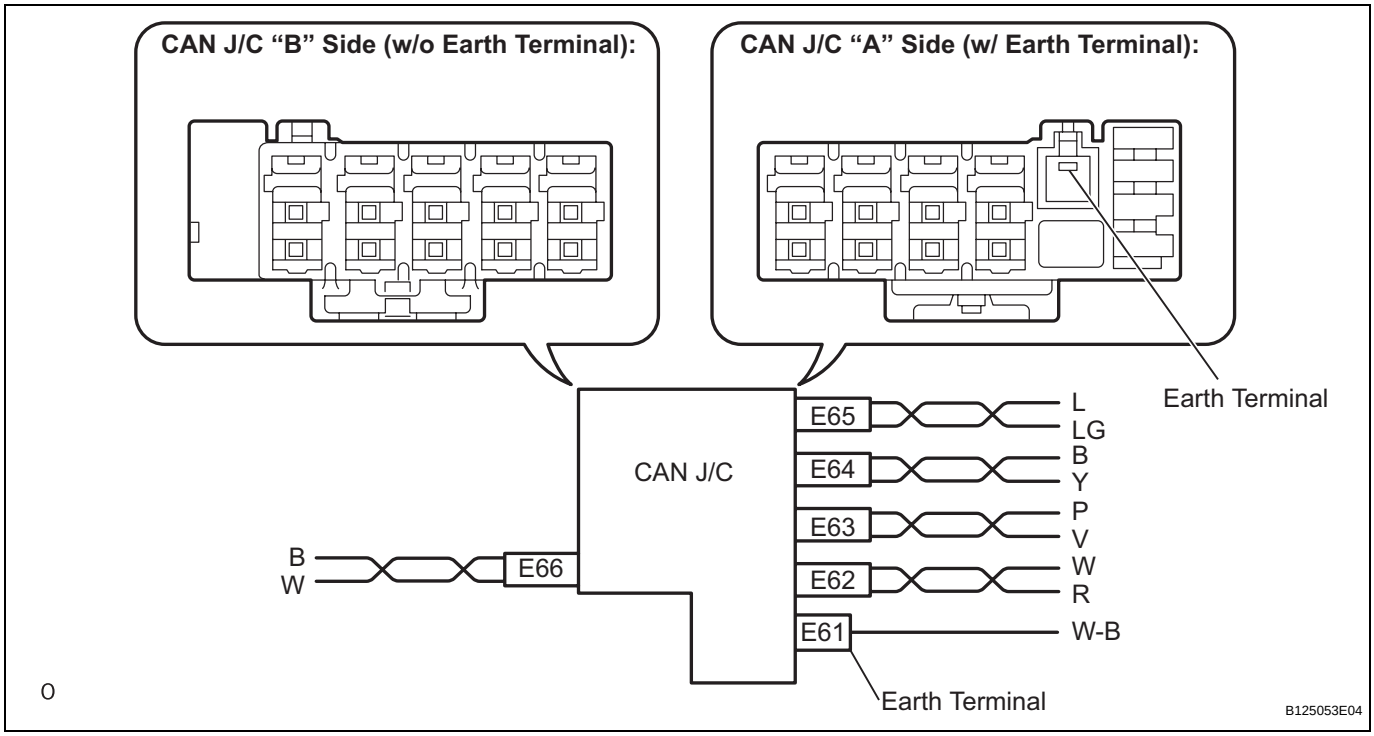

Wiring color

CAN J/C connectors ("A" side, w/ earth terminal)	Color (CAN-H Side)	Color (CAN-L Side)
ECM (E62)	W	R
DLC3 (E63)	P	V
Steering angle sensor (E64)	B	Y

CA

CAN J/C connectors ("A" side, w/ earth terminal)	Color (CAN-H Side)	Color (CAN-L Side)
Yaw rate sensor (E65)	L	LG

Wiring color

CAN J/C connectors ("B" side, w/o earth terminal)	Color (CAN-H Side)	Color (CAN-L Side)
Skid control ECU (E66)	B	W

(b) The terminals of the CAN J/C connectors.

Terminal	Terminal symbol
1	CAN-H
2	CAN-L

Wire Harness Side:

CAN J/C Connector

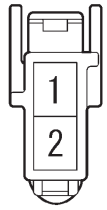

Front View

C133723E01

(c) Measure the resistance.

Standard resistance

Terminal	Specified Condition
CANH - CANL	**108 to 132 Ω**

CAN J/C "A" Side (w/ Earth Terminal):

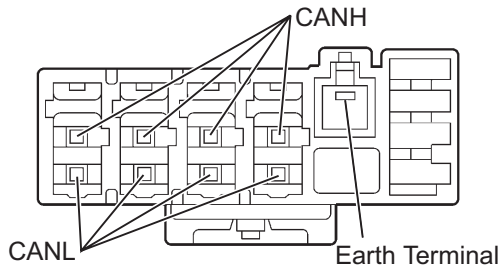

CAN J/C "B" Side (w/o Earth Terminal):

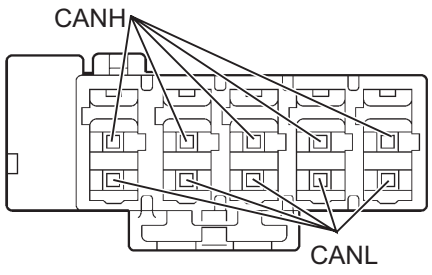

G026214E15

(d) Wiring diagram for identifying CAN J/C connectors.

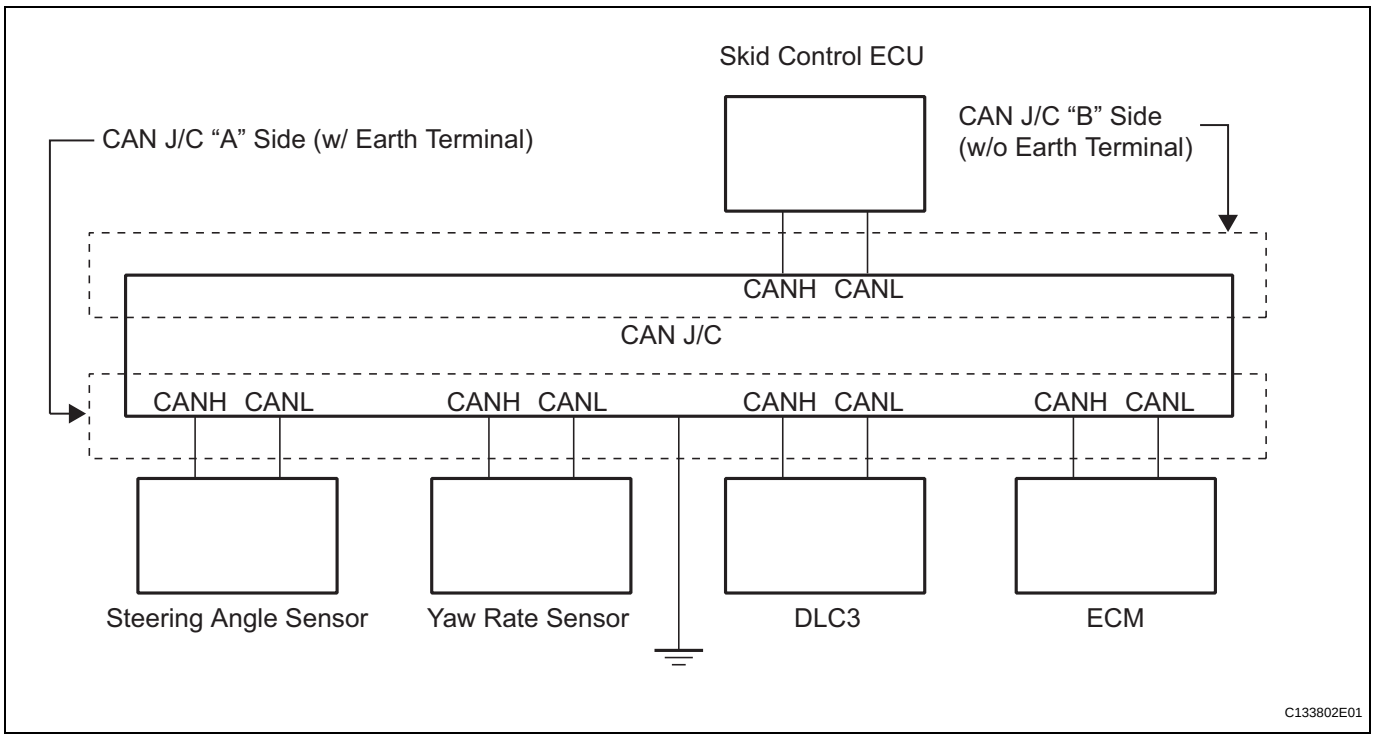

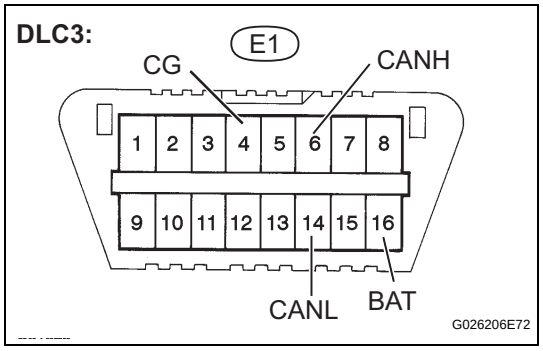

2. DLC3

(a) Turn the ignition switch OFF.

(b) Measure the resistance.

Standard resistance

Terminals	Wiring Color	Condition	Specified Condition
E1-6 (CANH) - E1-14 (CANL)	P - V	Ignition Switch OFF	54 to 69 Ω
E1-6 (CANH) - E1-4 (CG)	P - W-B	Ignition Switch OFF	200 Ω or more
E1-14 (CANL) - E1-4 (CG)	V - W-B	Ignition Switch OFF	200 Ω or more
E1-6 (CANH) - E1-16 (BAT)	P - O	Ignition Switch OFF	6 kΩ or more
E1-14 (CANL) - E1-16 (BAT)	V - O	Ignition Switch OFF	6k Ω or more

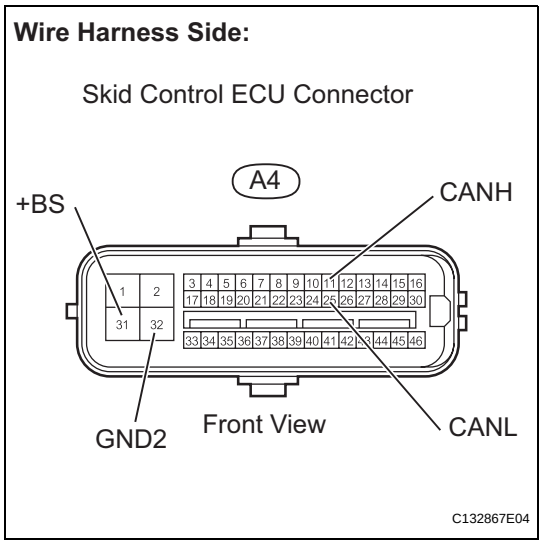

3. SKID CONTROL ECU

(a) Turn the ignition switch OFF.
(b) Disconnect the A4 skid control ECU connector.
(c) Measure the resistance.

Standard resistance

Terminals	Wiring Color	Condition	Specified Condition
A4-11 (CANH) - A4-25 (CANL)	B - W	Ignition Switch OFF	54 to 69 Ω
A4-11 (CANH) - A4-32 (GND2)	B - W-B	Ignition Switch OFF	200 Ω or more
A4-25 (CANL) - A4-32 (GND2)	W - W-B	Ignition Switch OFF	200 Ω or more
A4-11 (CANH) - A4-31 (+BS)	B - Y	Ignition Switch OFF	6 kΩ or more
A4-25 (CANL) - A4-31 (+BS)	W - Y	Ignition Switch OFF	6 kΩ or more

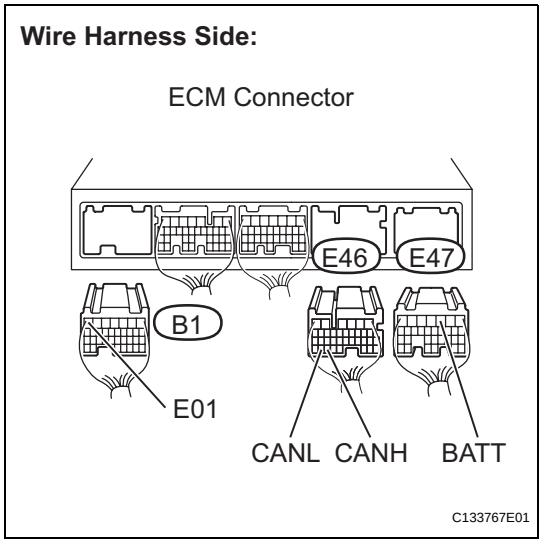

4. ECM

(a) Turn the ignition switch OFF.
(b) Disconnect the B1, E46 and E47 ECM connectors.
(c) Measure the resistance.

Standard resistance

Terminals	Wiring Color	Condition	Specified Condition
E46-33 (CANH) - E46-34 (CANL)	W - R	Ignition switch OFF	108 to 132 Ω
E46-33 (CANH) - B1-7 (E01)	W - BR	Ignition switch OFF	200 Ω or more
E46-34 (CANL) - B1-7 (E01)	R - BR	Ignition switch OFF	200 Ω or more
E46-33 (CANH) - E47-3 (BATT)	W - L	Ignition switch OFF	6 kΩ or more
E46-34 (CANL) - E47-3 (BATT)	R - L	Ignition switch OFF	6 kΩ or more

Wire Harness Side:

Yaw Rate Sensor Connector

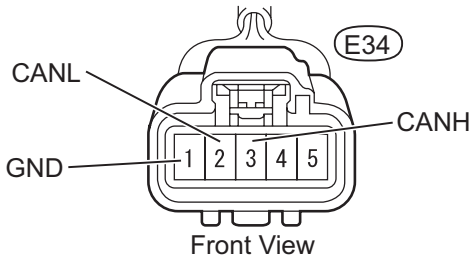

DLC3:

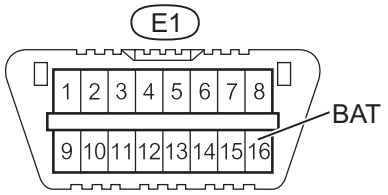

C125958E06

5. YAW RATE SENSOR

(a) Turn the ignition switch OFF.
(b) Disconnect the E34 yaw rate sensor connector.
(c) Measure the resistance.

Standard resistance

Terminals	Wiring Color	Condition	Specified Condition
E34-3 (CANH) - E34-2 (CANL)	L - LG	Ignition switch OFF	54 to 69 Ω
E34-3 (CANH) - E34-1 (GND)	L - W-B	Ignition switch OFF	200 Ω or more
E34-2 (CANL) - E34-1 (GND)	LG - W-B	Ignition switch OFF	200 Ω or more
E34-3 (CANH) - E1-16 (BAT)	L - O	Ignition switch OFF	6 kΩ or more
E34-2 (CANL) - E1-16 (BAT)	LG - O	Ignition switch OFF	6 kΩ or more

Wire Harness Side:

Steering Angle Sensor Connector

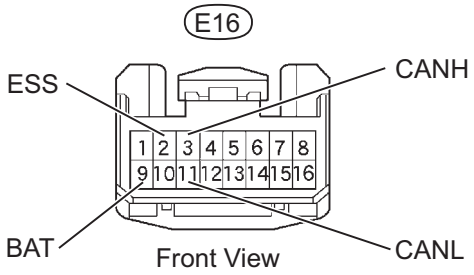

C133843E01

6. STEERING ANGLE SENSOR

(a) Turn the ignition switch OFF.
(b) Disconnect the E16 steering angle sensor connector.
(c) Measure the resistance.

Standard resistance

Terminals	Wiring Color	Condition	Specified Condition
E16-3 (CANH) - E16-11 (CANL)	B - Y	Ignition switch OFF	54 to 69 Ω
E16-3 (CANH) - E16-2 (ESS)	B - W-B	Ignition switch OFF	200 Ω or more
E16-11 (CANL) - E16-2 (ESS)	Y - W-B	Ignition switch OFF	200 Ω or more
E16-3 (CANH) - E16-9 (BAT)	B - W-R	Ignition switch OFF	6 kΩ or more
E16-11 (CANL) - E16-9 (BAT)	Y - W-R	Ignition switch OFF	6 kΩ or more

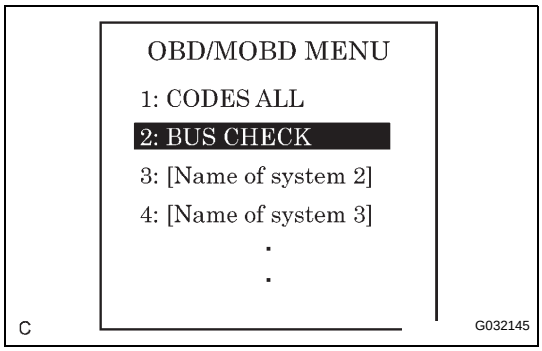

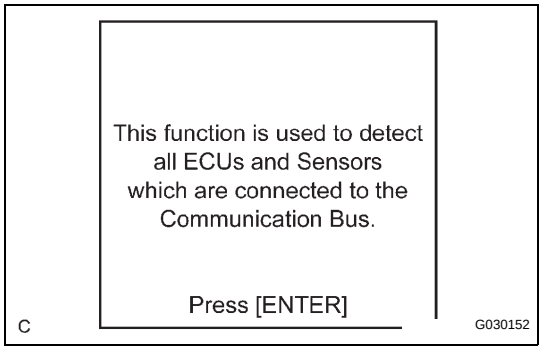

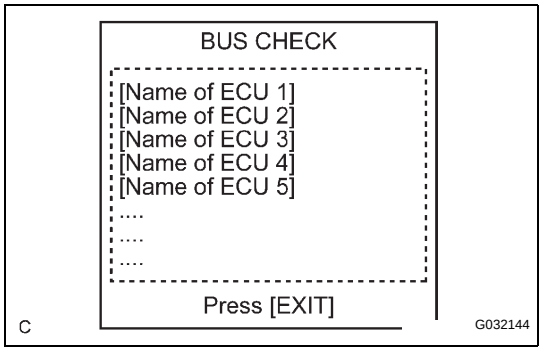

DIAGNOSIS SYSTEM

1. BUS CHECK

(a) Select "BUS CHECK" from the "OBD/MOBD MENU" screen.
HINT:
The ECUs and sensors that are properly connected to the CAN communication system can be displayed using the intelligent tester via the CAN VIM.

(b) Press "ENTER" on the intelligent tester via the CAN VIM.

(c) The screen displays the ECUs and sensors that are properly connected to the CAN communication system.
HINT:
If any properly connected ECUs or sensors are not displayed, there is a communication stop in the system.

2. CHECK INSTALLED SYSTEMS (ECUs AND SENSORS) THAT ADOPT CAN COMMUNICATION

(a) Systems (ECUs and sensors) that adopt CAN communication vary depending on the vehicle's optional settings. Check which systems (ECUs and sensors) are installed on the vehicle.

ECU/Sensor name	Check method
Skid control ECU	Installed on all vehicles
ECM	Installed on all vehicles
Yaw rate sensor	Installed on all vehicles
Steering angle sensor	Installed on all vehicles

3. DTC TABLE BY ECU

HINT:
- In the CAN communication system, CAN communication system DTCs output by the ECU can be displayed by using the intelligent tester.
- If CAN communication system DTCs are output, trouble cannot be determined solely from the DTCs. Perform troubleshooting according to "HOW TO PROCEED WITH TROUBLESHOOTING" (See page CA-6).

(a) SKID CONTROL ECU
HINT:
DTC communication uses the SIL Line.

DTC No.	Detection Item
U0073/94	Control Module Communication Bus OFF
U0100/65	Lost Communication with ECM/PCM
U0123/62	Lost Communication with Yaw Rate Sensor Module
U0124/95	Lost Communication with Lateral Acceleration Sensor Module
U0126/63	Lost Communication with Steering Angle Sensor Module

(b) YAW RATE SENSOR
HINT:
- The yaw rate sensor is connected to the CAN communication system but CAN communication DTCs are not output.
- If "YAW/DECELERATE" is not displayed on the "BUS CHECK" screen on the intelligent tester, proceed to "Yaw Rate Sensor Communication Stop Mode." (See page CA-21)

(c) STEERING ANGLE SENSOR
HINT:
- The steering sensor is connected to the CAN communication system but CAN communication DTCs are not output.
- If "STEERING_SENSOR" is not displayed on the "BUS CHECK" screen on the intelligent tester, proceed to "Steering Angle Sensor Communication Stop Mode." (See page CA-19)

(d) ECM
HINT:
- The ECM is connected to the CAN communication system but CAN communication DTCs are not output.
- If "ENGINE" is not displayed on the "BUS CHECK" screen on the intelligent tester, proceed to "ECM Communication Stop Mode." (See page CA-23)

4. DTC COMBINATION TABLE

DTC		Trouble Mode			
Output from	Output DTC	ECM Communication Stop Mode	Skid Control ECU Communication Stop Mode	Yaw Rate Sensor Communication Stop Mode	Steering Angle Sensor Communication Stop Mode
Skid Control ECU	U0073/94	X	X	X	X
	U0100/65	O	X	X	X
	U0123/62	X	X	O	X
	U0124/95	X	X	O	X
	U0126/63	X	X	X	O

HINT:
- O: It is necessary to check for the trouble mode.
- X: Not output

(a) Perform troubleshooting according to the combination of DTCs output.
HINT:
- Skid Control ECU Communication Stop Mode: (See page CA-17)

CA

- ECM Communication Stop Mode: (See page CA-23)
- Yaw Rate Sensor Communication Stop Mode: (See page CA-21)
- Steering Angle Sensor Communication Stop Mode: (See page CA-19)

FAIL-SAFE CHART

1. FAIL-SAFE FUNCTION

(a) When communication fails in any of the CAN bus lines (communication lines) due to a short circuit or other causes, the fail-safe function, which is specified for each system, operates to prevent the system from malfunctioning.

(b) Relationships between components and system functions and effects of communication failure on these functions. (For further details, see the pages for each system.)

Function	ECM	Skid control ECU	Yaw rate sensor	Steering Angle Sensor	Condition when communication impossible	DTC detection (Driver detectable)
VSC Control (Controls VSC/ TRAC engine output)	○	●	○	○	VSC function stops	Detectable (Light comes on)

HINT:

- ●: Control master
- ○: System related

Skid Control ECU Communication Stop Mode

DESCRIPTION

Detection Item	Symptom	Trouble Area
Skid Control ECU Communication Stop Mode	• "ABS/VSC/TRAC" not displayed on "BUS CHECK" screen of intelligent tester via CAN VIM • Applies to "Skid Control ECU Communication Stop Mode" in "DTC combination table"	• Power source circuit of skid control ECU • Skid control ECU branch wire or connector • Skid control ECU

WIRING DIAGRAM

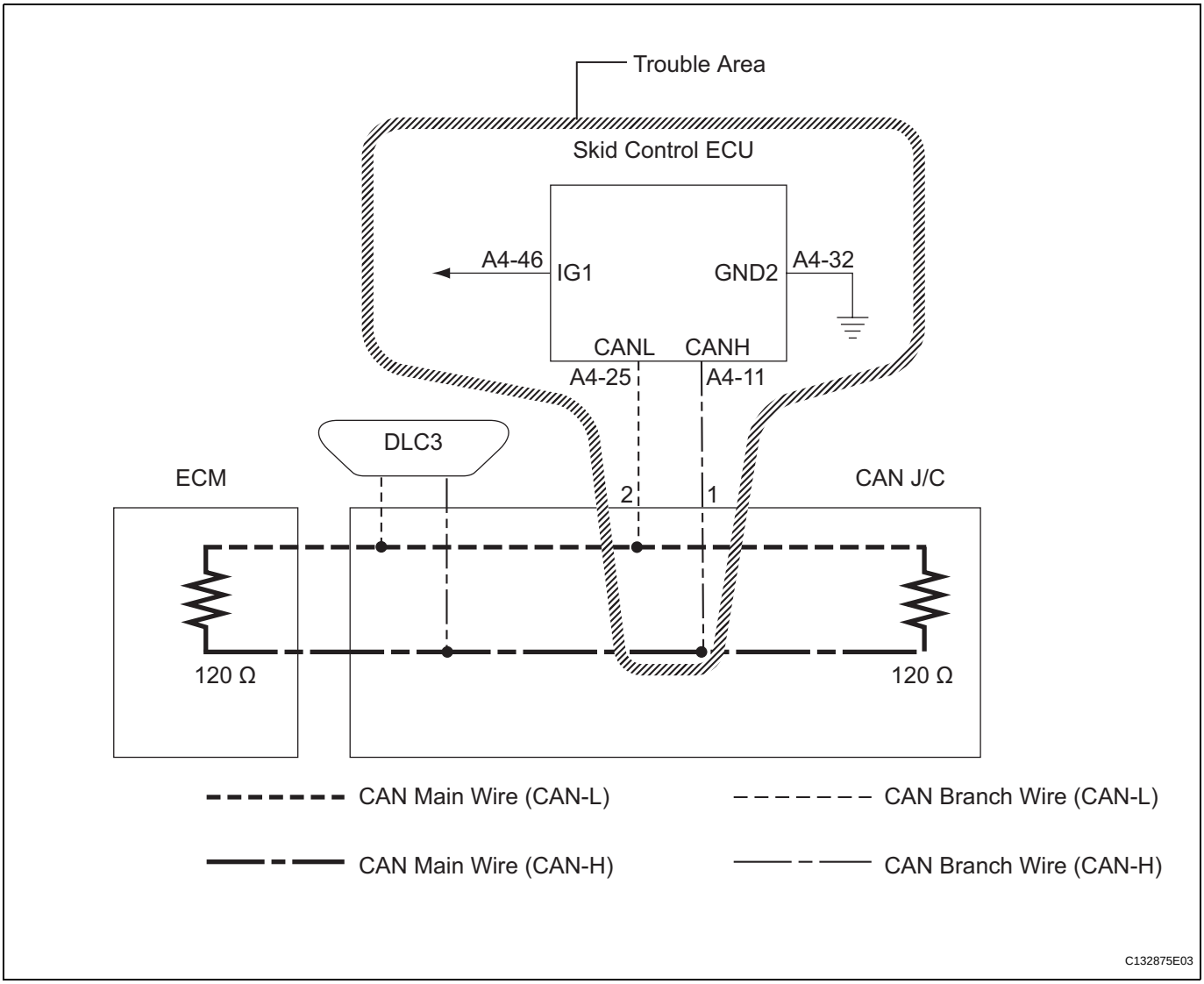

INSPECTION PROCEDURE

NOTICE:

- **Turn the ignition switch off before measuring the resistances of the CAN main wire and the CAN branch wire.**
- **After the ignition switch is turned off, check that the key reminder warning system is not in operation.**

CA

- **Before measuring the resistance, leave the vehicle as is for at least 1 minute and do not operate the ignition switch, any other switches or the doors. If doors need to be opened in order to check connectors, open the doors and leave them open.**
  HINT:
  Operating the ignition switch, any switches or any doors triggers related ECU and sensor communication with the CAN, which causes resistance variation.

1	CHECK CAN BUS LINE FOR DISCONNECTION (SKID CONTROL ECU BRANCH WIRE)

Wire Harness Side:

Skid Control ECU Connector

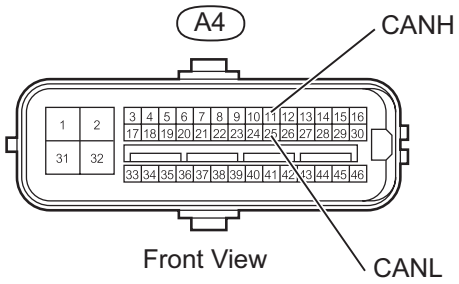

(a) Turn the ignition switch OFF.
(b) Disconnect the A4 skid control ECU connector.
(c) Measure the resistance.
Standard resistance

Tester connection	Condition	Specified Condition
A4-11 (CANH) - A4-25 (CANL)	Ignition switch OFF	54 to 69 Ω

NG → **REPAIR OR REPLACE CAN BRANCH WIRE CONNECTED TO SKID CONTROL ECU (CAN-H, CAN-L)**

OK

2	CHECK HARNESS AND CONNECTOR (IG1, GND2)

Wire Harness Side:

Skid Control ECU Connector

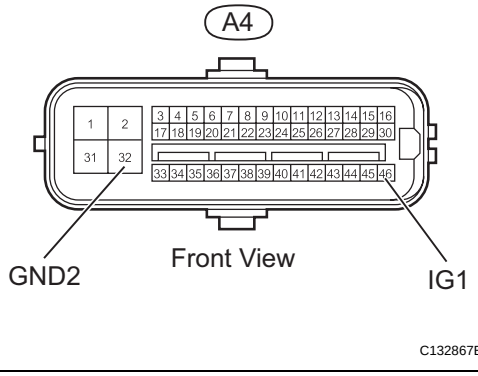

(a) Disconnect the A4 skid control ECU connector.
(b) Measure the resistance.
Standard resistance

Tester connection	Condition	Specified Condition
A4-32 (GND2) - Body ground	Always	Below 1 Ω

(c) Measure the voltage.
Standard voltage

Tester connection	Condition	Specified Condition
A4-46 (IG1) - Body ground	Ignition switch ON	11 to 14 V

NG → **REPAIR OR REPLACE HARNESS OR CONNECTOR**

OK

REPLACE MASTER CYLINDER SOLENOID

Yaw Rate Sensor Communication Stop Mode

DESCRIPTION

Detection Item	Symptom	Trouble Area
Yaw Rate Sensor Communication Stop Mode	• "YAW/DECELERATE" not displayed on "BUS CHECK" screen of intelligent tester via CAN VIM • Applies to "Yaw Rate Sensor Communication Stop Mode" in "DTC combination table"	• Power source circuit of yaw rate sensor • Yaw rate sensor branch wire or connector • Yaw rate sensor

WIRING DIAGRAM

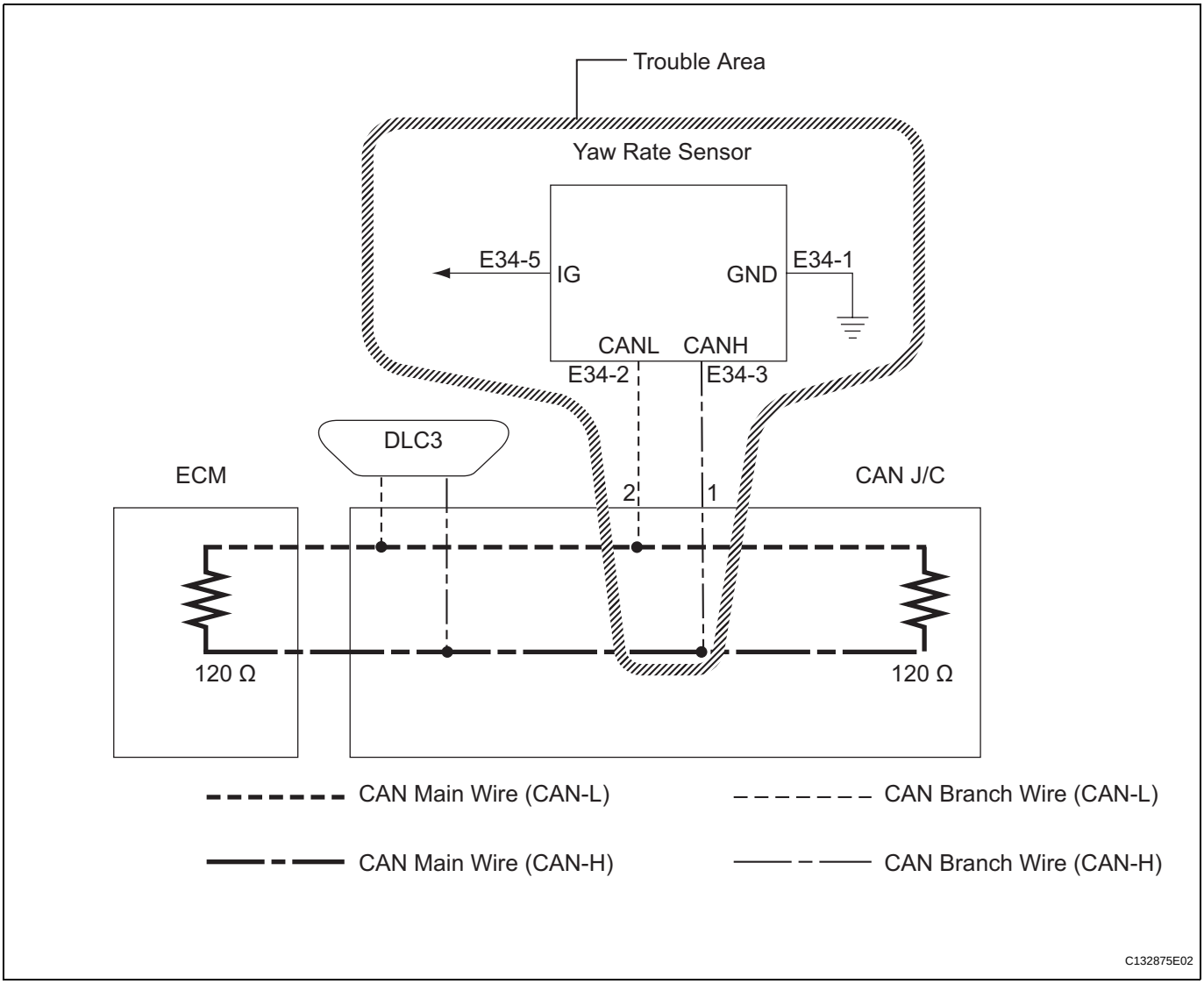

INSPECTION PROCEDURE

NOTICE:

- **Turn the ignition switch off before measuring the resistances of the CAN main wire and the CAN branch wire.**
- **After the ignition switch is turned off, check that the key reminder warning system is not in operation.**

- **Before measuring the resistance, leave the vehicle as is for at least 1 minute and do not operate the ignition switch, any other switches or the doors. If doors need to be opened in order to check connectors, open the doors and leave them open.**
  HINT:
  Operating the ignition switch, any switches or any doors triggers related ECU and sensor communication with the CAN, which causes resistance variation.

1	CHECK CAN BUS LINE FOR DISCONNECTION

Wire Harness Side:

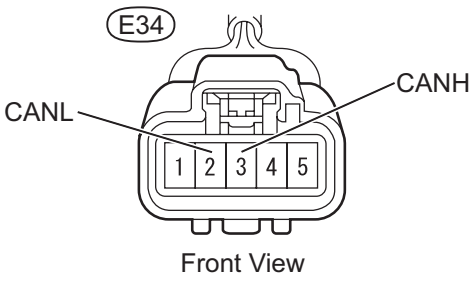

(a) Turn the ignition switch OFF.
(b) Disconnect the E34 yaw rate sensor connector.
(c) Measure the resistance.
Standard resistance

Tester Connection	Condition	Specified Condition
E34-3 (CANH) - E34-2 (CANL)	Ignition switch OFF	54 to 69 Ω

NG → **REPAIR OR REPLACE CAN BRANCH WIRE CONNECTED TO YAW RATE SENSOR (CAN-H, CAN-L)**

OK

2	CHECK HARNESS AND CONNECTOR

Wire Harness Side:

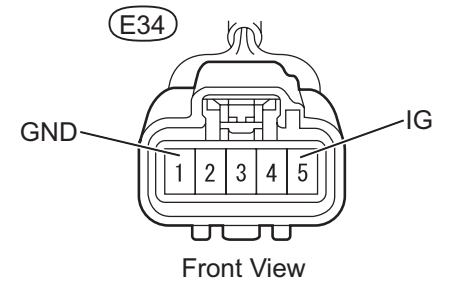

(a) Disconnect the E34 yaw rate sensor connector.
(b) Measure the resistance.
Standard resistance

Tester Connection	Condition	Specified Condition
E34-1 (GND) - Body ground	Ignition switch OFF	Below 1 Ω

(c) Measure the voltage.
Standard voltage

Tester Connection	Condition	Specified Condition
E34-5 (IG) - Body ground	Ignition switch ON	11 to 14 V

NG → **REPAIR OR REPLACE HARNESS OR CONNECTOR**

OK

REPLACE YAW RATE SENSOR

CA

Steering Angle Sensor Communication Stop Mode

DESCRIPTION

Detection Item	Symptom	Trouble Area
Steering Angle Sensor Communication Stop Mode	• "STEERING_SENSOR" not displayed on "BUS CHECK" screen of intelligent tester via CAN VIM • Applies to "Steering Angle Sensor Communication Stop Mode" in "DTC combination table"	• Power source circuit of steering angle sensor • Steering angle sensor branch wire or connector • Steering angle sensor

WIRING DIAGRAM

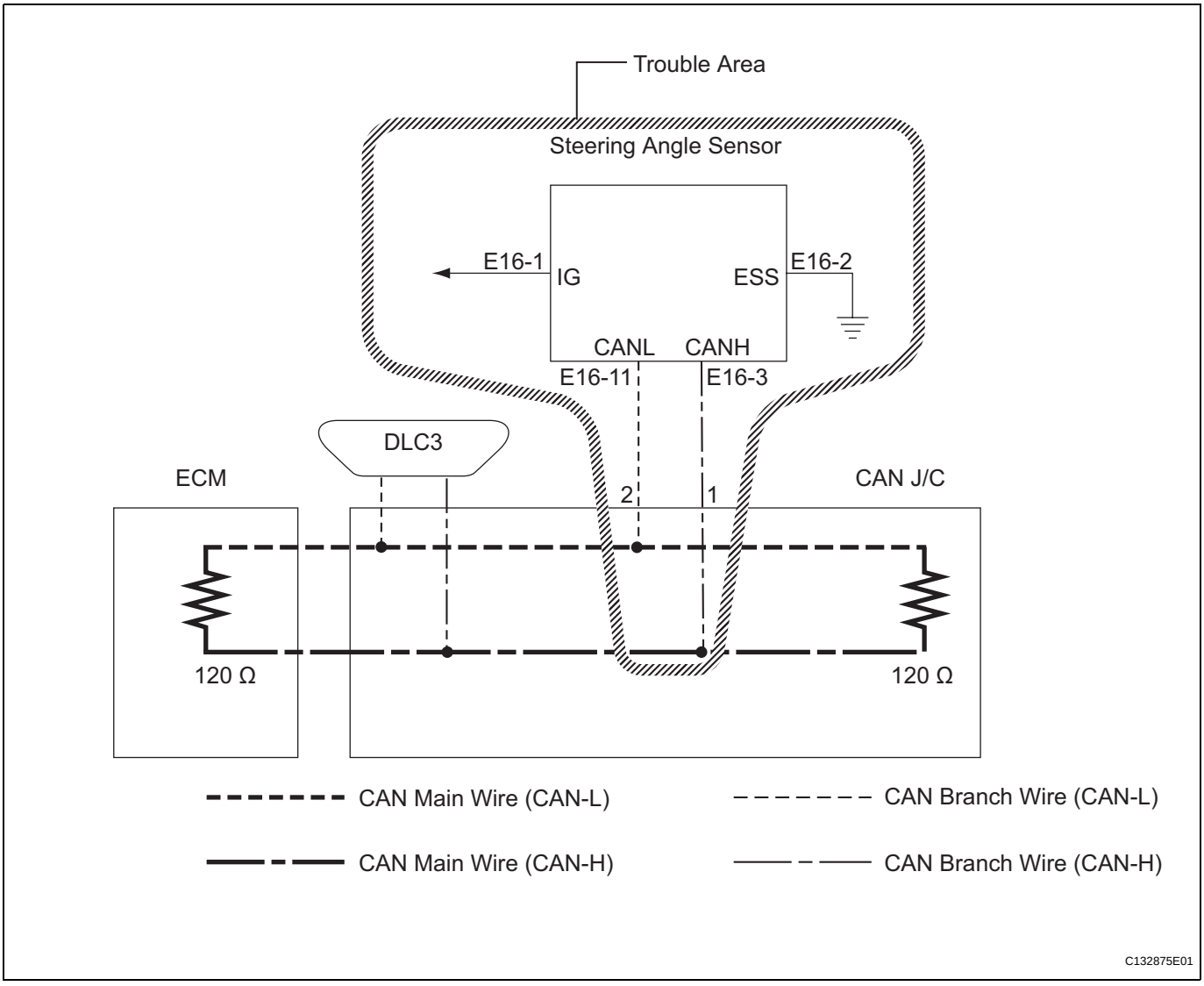

INSPECTION PROCEDURE

NOTICE:

- **Turn the ignition switch off before measuring the resistances of the CAN main wire and the CAN branch wire.**
- **After the ignition switch is turned off, check that the key reminder warning system is not in operation.**

- **Before measuring the resistance, leave the vehicle as is for at least 1 minute and do not operate the ignition switch, any other switches or the doors. If doors need to be opened in order to check connectors, open the doors and leave them open.**
  HINT:
  Operating the ignition switch, any switches or any doors triggers related ECU and sensor communication with the CAN, which causes resistance variation.

1 CHECK CAN BUS LINE FOR DISCONNECTION

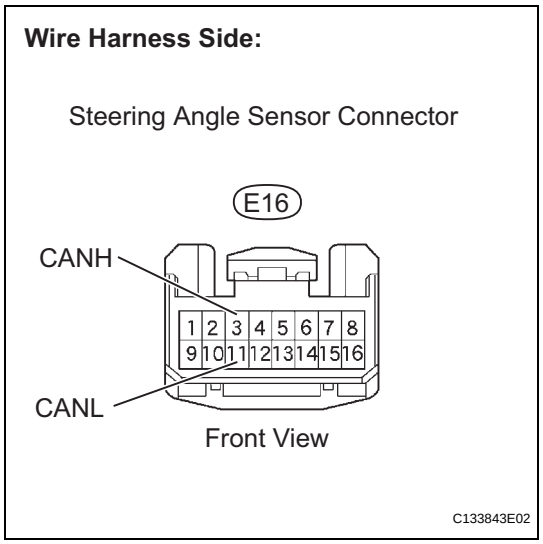

(a) Turn the ignition switch OFF.
(b) Disconnect the E16 steering angle sensor connector.
(c) Measure the resistance.
Standard resistance

Tester Connection	Condition	Specified Condition
E16-3 (CANH) - E16-11 (CANL)	Ignition switch OFF	54 to 69 Ω

NG → **REPAIR OR REPLACE CAN BRANCH WIRE CONNECTED TO STEERING ANGLE SENSOR (CAN-H, CAN-L)**

OK

2 CHECK HARNESS AND CONNECTOR

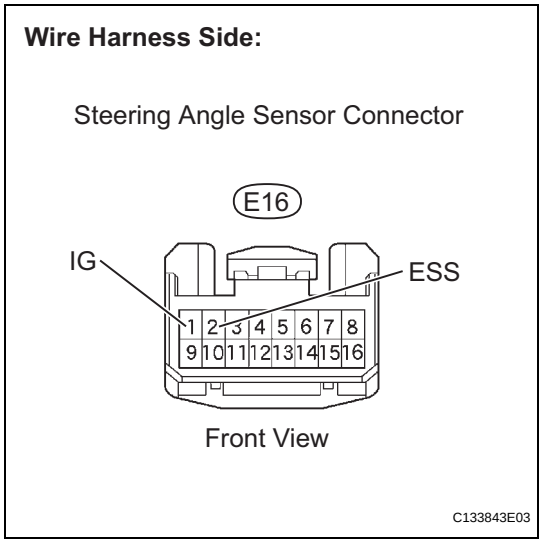

(a) Disconnect the E16 steering angle sensor connector.
(b) Measure the resistance.
Standard resistance

Tester Connection	Condition	Specified Condition
E16-2 (ESS) - Body ground	Always	Below 1 Ω

(c) Measure the voltage.
Standard voltage

Tester Connection	Condition	Specified Condition
E16-1 (IG) - Body ground	Ignition switch ON	11 to 14 V

NG → **REPAIR OR REPLACE HARNESS OR CONNECTOR**

OK

REPLACE STEERING ANGLE SENSOR

ECM Communication Stop Mode

DESCRIPTION

Detection Item	Symptom	Trouble Area
ECM Communication Stop Mode	• "ENGINE" not displayed on "BUS CHECK" screen of intelligent tester via CAN VIM • Applies to "ECM COMMUNICATION STOP MODE" in "DTC combination table"	• Power source circuit of ECM • ECM main wire or connector • ECM

WIRING DIAGRAM

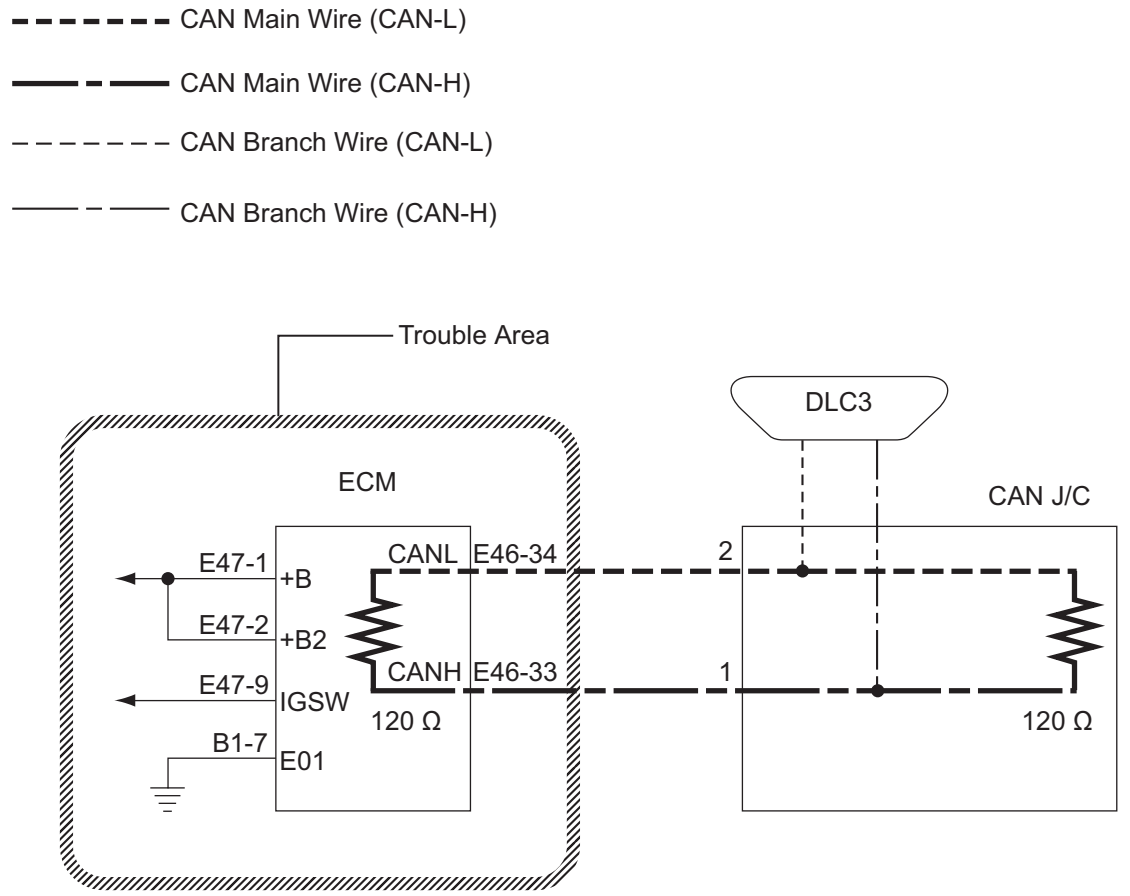

INSPECTION PROCEDURE

NOTICE:

- **Turn the ignition switch off before measuring the resistances of the CAN main wire and the CAN branch wire.**
- **After the ignition switch is turned off, check that the key reminder warning system is not in operation.**

- **Before measuring the resistance, leave the vehicle as is for at least 1 minute and do not operate the ignition switch, any other switches or the doors. If doors need to be opened in order to check connectors, open the doors and leave them open.**
  HINT:
  Operating the ignition switch, any switches or any doors triggers related ECU and sensor communication with the CAN, which causes resistance variation.

1	CHECK HARNESS AND CONNECTOR (+B2, +B, IGSW, E01)

Wire Harness Side:

ECM Connector

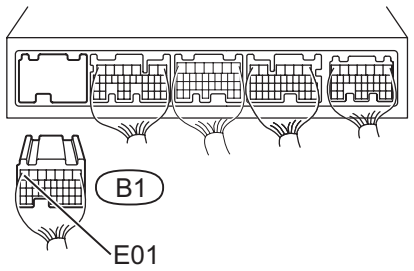

C140798E01

(a) Turn the ignition switch OFF.
(b) Disconnect the B1 ECM connector.
(c) Measure the resistance.
Standard resistance

Tester Connection	Condition	Specified Condition
B1-7 (E01) - Body ground	Always	Below 1 Ω

(d) Reconnect the ECM connector.

Wire Harness Side:

ECM Connector

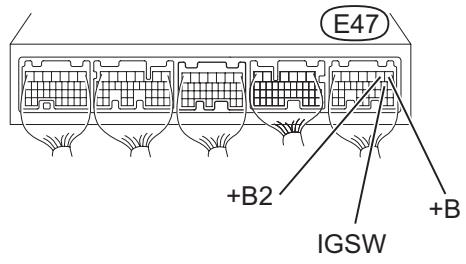

C140797E01

(e) Turn the ignition switch ON.
(f) Measure the voltage
Standard voltage

Tester Connection	Condition	Specified Condition
E47-1 (+B) - Body ground	Ignition switch ON	11 to 14 V
E47-2 (+B2) - Body ground	Ignition switch ON	11 to 14 V
E47-9 (IGSW) - Body ground	Ignition switch ON	11 to 14 V

NG → **REPAIR OR REPLACE HARNESS OR CONNECTOR**

OK

REPLACE ECM

CAN Bus Line

DESCRIPTION

When any DTC for the CAN communication system is output, first measure the resistance between the terminals of the DLC3 to specify the trouble area, and check that there is no short in the CAN main wire, between the CAN bus lines, to +B, or to GND.

WIRING DIAGRAM

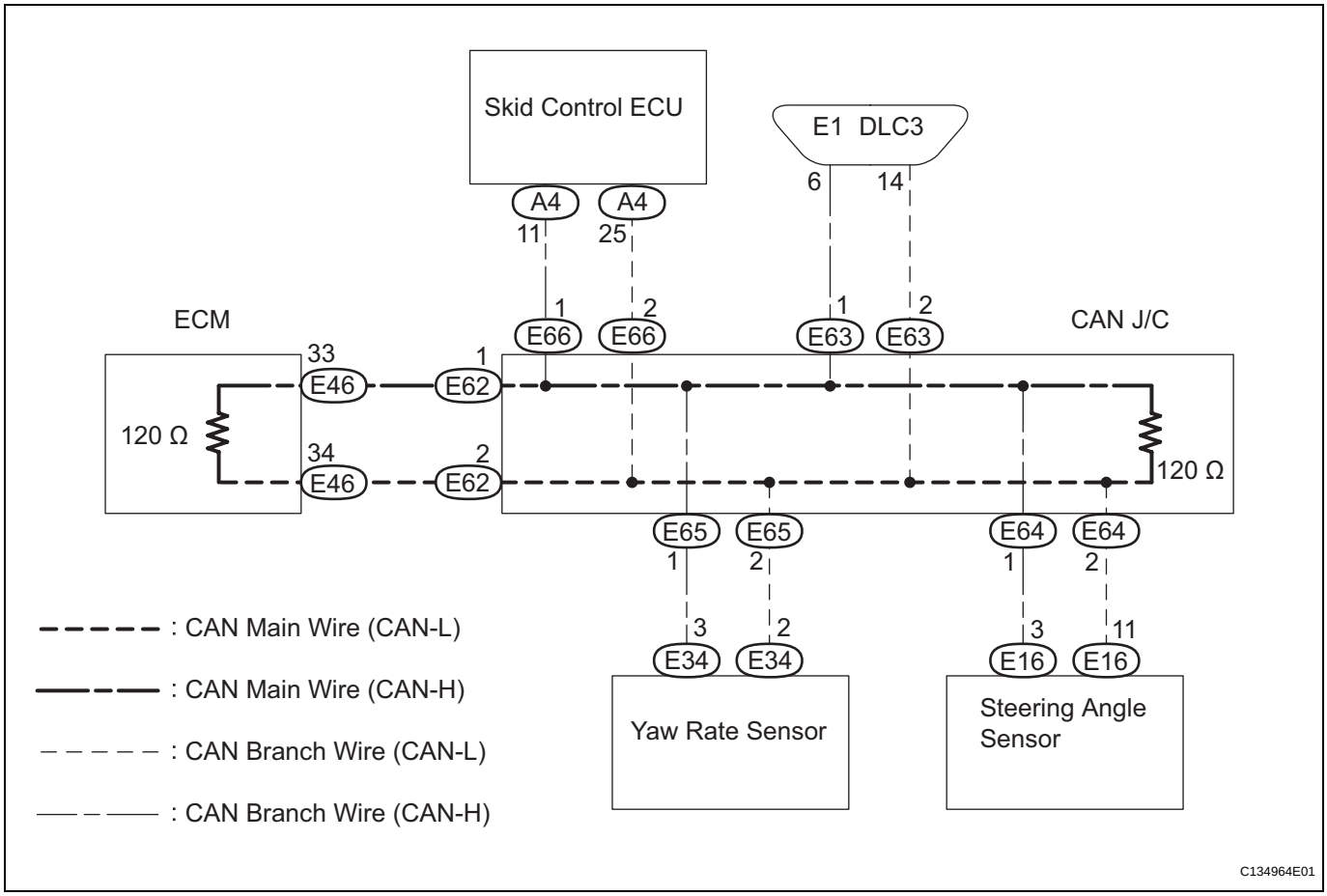

INSPECTION PROCEDURE

NOTICE:

- **Turn the ignition switch off before measuring the resistances of the CAN main wire and the CAN branch wire.**
- **After the ignition switch is turned off, check that the key reminder warning system is not in operation.**
- **Before measuring the resistance, leave the vehicle as is for at least 1 minute and do not operate the ignition switch, any other switches or the doors. If doors need to be opened in order to check connectors, open the doors and leave them open.**

  HINT:

  Operating the ignition switch, any switches or any doors triggers related ECU and sensor communication with the CAN, which causes resistance variation.

1	**CHECK CAN BUS LINE (MAIN WIRE FOR DISCONNECTION, BUS LINES FOR SHORT CIRCUIT)**

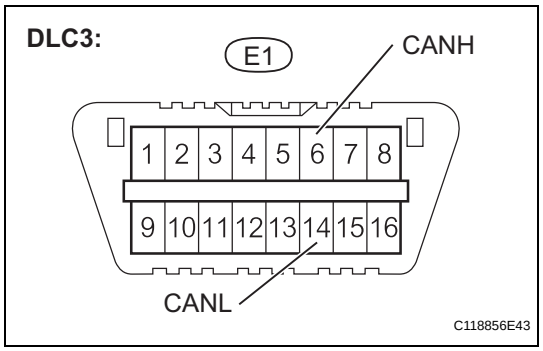

(a) Turn the ignition switch OFF.
(b) Measure the resistance.
Standard resistance

Tester Connection	Condition	Specified Condition	Proceed to
E1-6 (CANH) - E1-14 (CANL)	Ignition switch OFF	54 to 69 Ω	OK
E1-6 (CANH) - E1-14 (CANL)	Ignition switch OFF	69 Ω or more	NG-A
E1-6 (CANH) - E1-14 (CANL)	Ignition switch OFF	54 Ω or less	NG-B

NG-A → **CHECK CAN MAIN WIRE (FOR OPEN CIRCUIT)**

NG-B → **CHECK CAN BUS LINE (FOR SHORT CIRCUIT)**

OK

2	**CHECK CAN BUS LINE (FOR SHORT TO +B)**

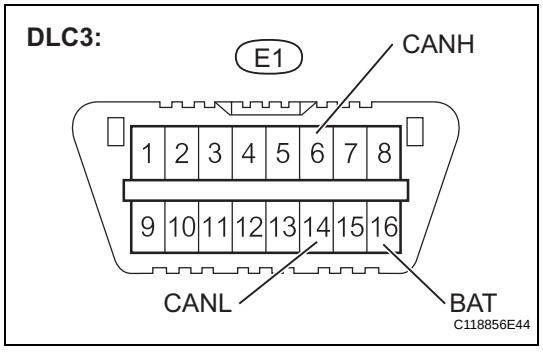

(a) Turn the ignition switch OFF.
(b) Measure the resistance.
Result

Tester Connection	Condition	Specified Condition	Proceed to
E1-6 (CANH) - E1-16 (BAT)	Ignition switch OFF	1 Ω or more	OK
E1-14 (CANL) - E1-16 (BAT)	Ignition switch OFF	1 Ω or more	OK
E1-6 (CANH) - E1-16 (BAT)	Ignition switch OFF	Below 1 Ω	NG
E1-14 (CANL) - E1-16 (BAT)	Ignition switch OFF	Below 1 Ω	NG

NG → **CHECK CAN BUS LINE (FOR SHORT TO +B)**

OK

3	CHECK CAN BUS LINE (FOR SHORT TO GND)

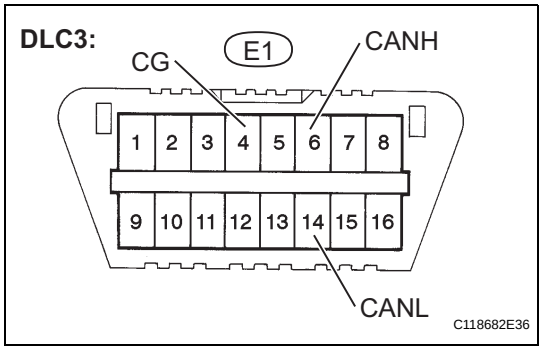

(a) Turn the ignition switch OFF.
(b) Measure the resistance.

Result

Tester Connection	Condition	Specified Condition	Proceed to
E1-6 (CANH) - E1-4 (CG)	Ignition switch OFF	1 Ω or more	OK
E1-14 (CANL) - E1-4 (CG)	Ignition switch OFF	1 Ω or more	OK
E1-6 (CANH) - E1-4 (CG)	Ignition switch OFF	Below 1 Ω	NG
E1-14 (CANL) - E1-4 (CG)	Ignition switch OFF	Below 1 Ω	NG

NG → CHECK CAN BUS LINE (FOR SHORT TO GND)

OK

HOW TO PROCEED WITH TROUBLESHOOTING

Open in CAN Main Wire

DESCRIPTION

There may be an open circuit in the CAN main wire and/or the DLC3 branch wire when the resistance between terminals 6 (CANH) and 14 (CANL) of the DLC3 is 69 Ω or more.

Symptom	Trouble Area
Resistance between terminals 6 (CANH) and 14 (CANL) of DLC3 is 69 Ω or more.	• CAN main wire or connector • ECM • CAN J/C

WIRING DIAGRAM

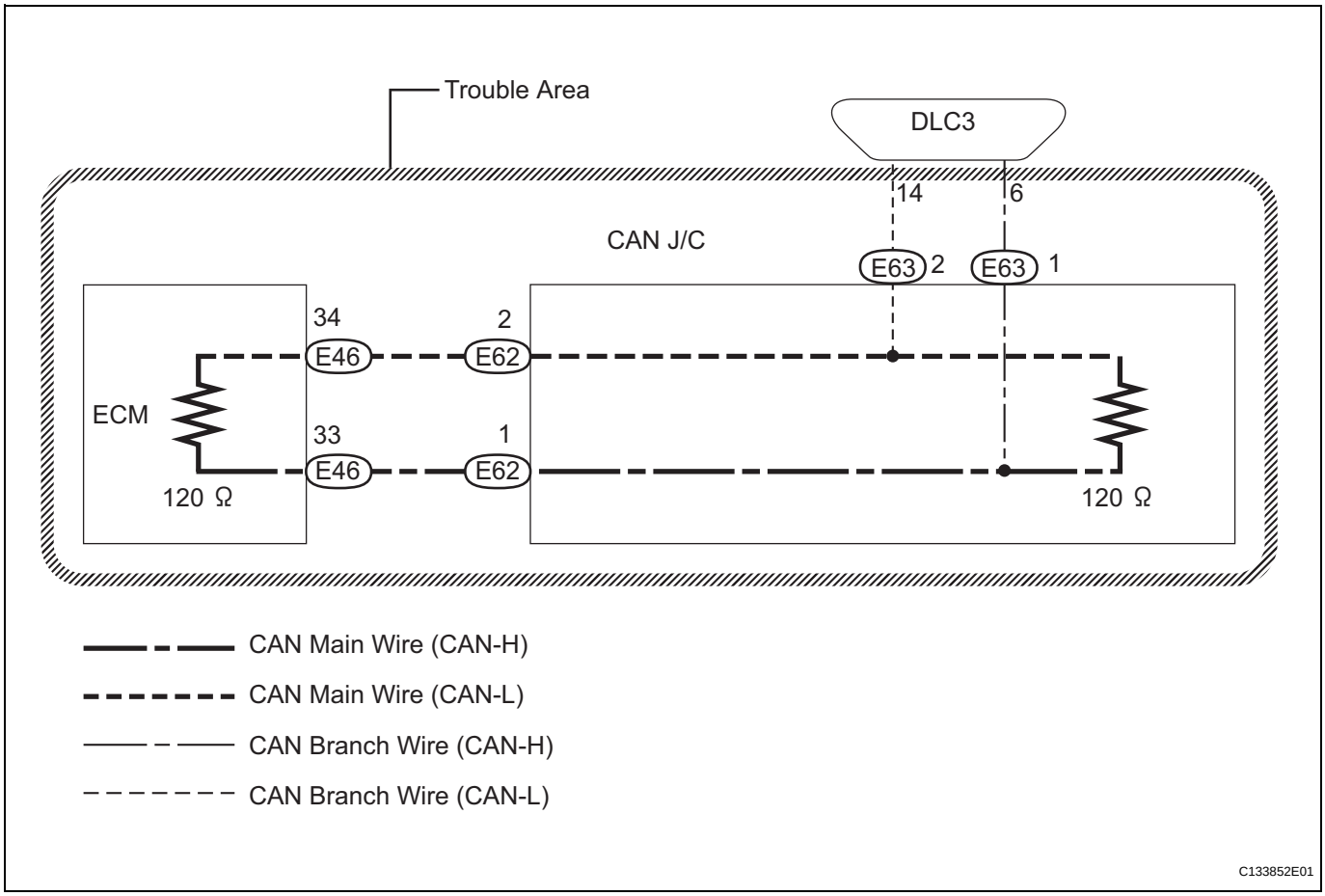

INSPECTION PROCEDURE

NOTICE:

- **Turn the ignition switch off before measuring the resistances of the CAN main wire and the CAN branch wire.**
- **After the ignition switch is turned off, check that the key reminder warning system is not in operation.**
- **Before measuring the resistance, leave the vehicle as is for at least 1 minute and do not operate the ignition switch, any other switches or the doors. If doors need to be opened in order to check connectors, open the doors and leave them open.**

  HINT:

  Operating the ignition switch, any switches or any doors triggers related ECU and sensor communication with the CAN, which causes resistance variation.

1 CHECK DLC3

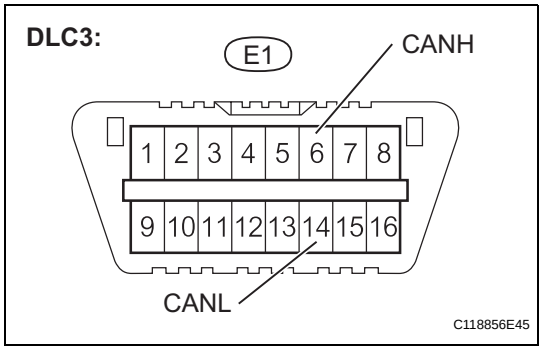

(a) Turn the ignition switch OFF.
(b) Measure the resistance.
Standard resistance

Tester Connection	Condition	Specified Condition	Proceed to
E1-6 (CANH) - E1-14 (CANL)	Ignition switch OFF	108 to 132 Ω	A
E1-6 (CANH) - E1-14 (CANL)	Ignition switch OFF	132 Ω or higher	B

NOTICE:
When the measured value is 132 Ω or more and a CAN communication system diagnostic trouble code is output, there may be a fault besides disconnection of the DLC3 branch wire. For that reason, troubleshooting should be performed again from "HOW TO PROCEED WITH TROUBLESHOOTING" (See page CA-6) after repairing the trouble area.

B → **REPAIR OR REPLACE CAN BRANCH WIRE CONNECTED TO DLC3 (CAN-H, CAN-L)**

A

2 CHECK CAN MAIN WIRE FOR DISCONNECTION (ECM)

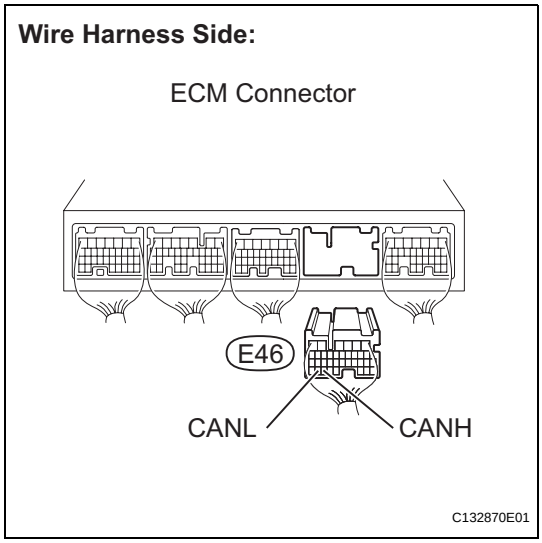

(a) Disconnect the E46 ECM connector.
(b) Measure the resistance.
Standard resistance

Tester Connection	Condition	Specified Condition
E46-33 (CANH) - E46-34 (CANL)	Ignition switch OFF	108 to 132 Ω

OK → **REPLACE ECM**

NG

3 CONNECT CONNECTOR

(a) Reconnect the ECM connector.

NEXT

CA

4	**INSPECT CAN J/C**

CAN J/C "A" Side (w/ Earth Terminal):

Wire Harness Side:

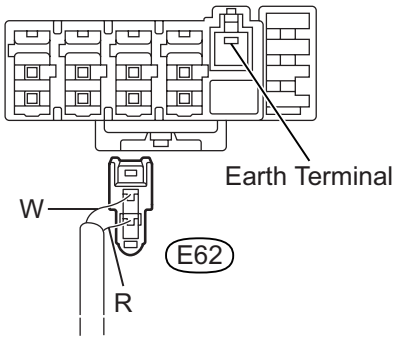

C133849E01

(a) Disconnect the E62 CAN main wire connector.
NOTICE:
- **Before disconnecting the connector, make a note of where it is connected.**
- **Reconnect the connector to its original position.**

CAN J/C "A" Side (w/ Earth Terminal):

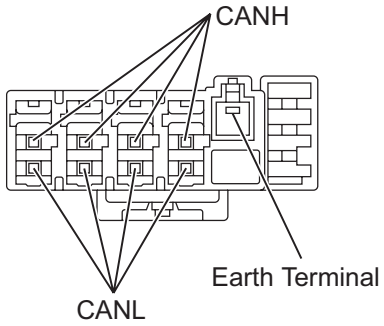

C133851E01

(b) Measure the resistance.
Standard resistance

Tester Connection	Condition	Specified Condition
CANH - CANL	Ignition switch OFF	108 to 132 Ω

NG → **REPLACE CAN J/C**

OK

REPAIR OR REPLACE CAN MAIN WIRE OR CONNECTOR (ECM - CAN J/C (CAN-H, CAN-L))

Short in CAN Bus Lines

DESCRIPTION

The CAN bus lines are considered to be shorted when the resistance between terminals 6 (CANH) and 14 (CANL) of the DLC3 is below 54 Ω.

Symptom	Trouble Area
Resistance between terminals 6 (CANH) and 14 (CANL) of DLC3 is below 54 Ω.	• Short in CAN bus lines • ECM • Skid control ECU • Yaw rate sensor • Steering angle sensor • CAN J/C

WIRING DIAGRAM

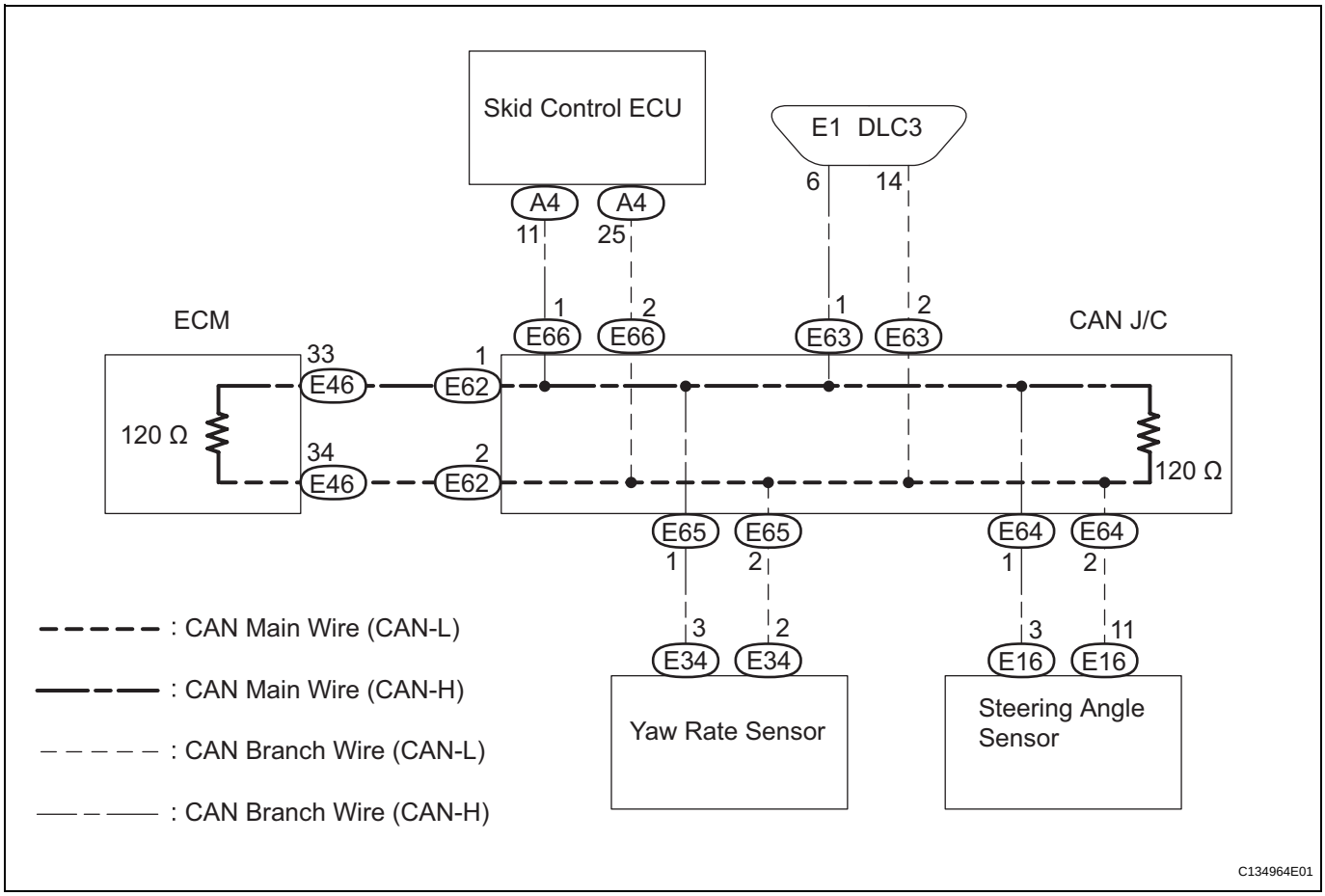

INSPECTION PROCEDURE

NOTICE:

- **Turn the ignition switch off before measuring the resistances of the CAN main wire and the CAN branch wire.**
- **After the ignition switch is turned off, check that the key reminder warning system is not in operation.**

- **Before measuring the resistance, leave the vehicle as is for at least 1 minute and do not operate the ignition switch, any other switches or the doors. If doors need to be opened in order to check connectors, open the doors and leave them open.**
  HINT:
  Operating the ignition switch, any switches or any doors triggers related ECU and sensor communication with the CAN, which causes resistance variation.

1	CHECK CAN BUS LINES FOR SHORT CIRCUIT (DLC3 BRANCH WIRE)

CAN J/C "A" Side (w/ Earth Terminal):

Wire Harness Side:

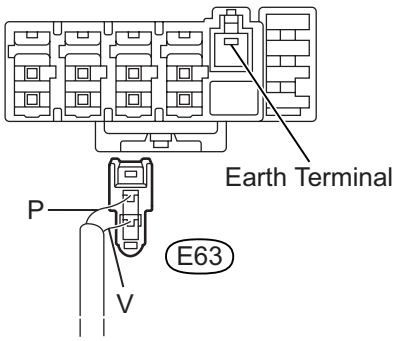

C133849E02

(a) Turn the ignition switch OFF.
(b) Disconnect the E63 DLC3 branch wire connector.
NOTICE:
- **Before disconnecting the connector, make a note of where it is connected.**
- **Reconnect the connector to its original position.**

DLC3:

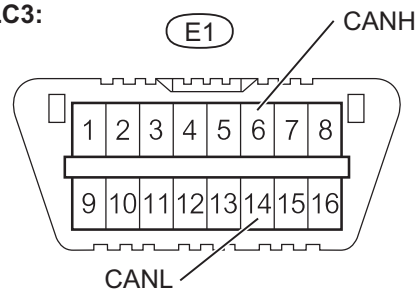

C118856E45

(c) Measure the resistance.
Result

Tester Connection	Condition	Specified Condition	Proceed to
E1-6 (CANH) - E1-14 (CANL)	Ignition switch OFF	1 Ω or more	OK
E1-6 (CANH) - E1-14 (CANL)	Ignition switch OFF	Below 1 Ω	NG

NG → **REPAIR OR REPLACE CAN BRANCH WIRE CONNECTED TO DLC3 (CAN-H, CAN-L)**

OK

2	CONNECT CONNECTOR

(a) Reconnect the DLC3 branch wire connector.

NEXT

3	CHECK CAN BUS LINES FOR SHORT CIRCUIT (SKID CONTROL ECU BRANCH WIRE)

CAN J/C "B" Side (w/o Earth Terminal):

Wire Harness Side:

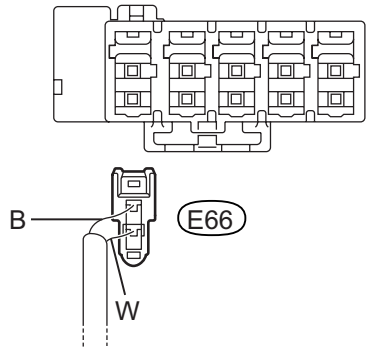

C133850E01

(a) Turn the ignition switch OFF.

(b) Disconnect the E66 skid control ECU branch wire connector.

NOTICE:

- **Before disconnecting the connector, make a note of where it is connected.**
- **Reconnect the connector to its original position.**

DLC3:

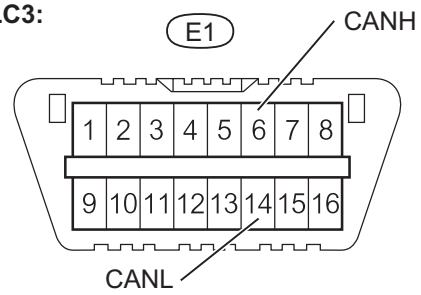

C118856E45

(c) Measure the resistance.

Result

Tester Connection	Condition	Specified Condition	Proceed to
E1-6 (CANH) - E1-14 (CANL)	Ignition switch OFF	1 Ω or more	OK
E1-6 (CANH) - E1-14 (CANL)	Ignition switch OFF	Below 1 Ω	NG

OK → **Go to step 10**

NG

4	CONNECT CONNECTOR

(a) Reconnect the skid control ECU branch wire connector.

NEXT

5 CHECK CAN BUS LINES FOR SHORT CIRCUIT (YAW RATE SENSOR BRANCH WIRE)

CAN J/C "A" Side (w/ Earth Terminal):

Wire Harness Side:

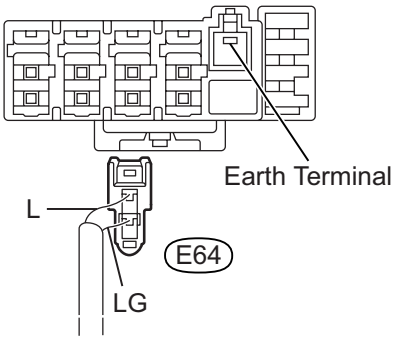

C133849E03

(a) Turn the ignition switch OFF.

(b) Disconnect the E64 yaw rate sensor branch wire connector.

NOTICE:

- **Before disconnecting the connector, make a note of where it is connected.**
- **Reconnect the connector to its original position.**

DLC3:

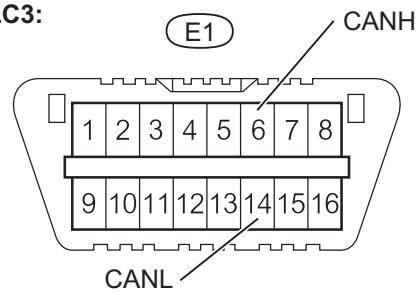

C118856E45

(c) Measure the resistance.

Result

Tester Connection	Condition	Specified Condition	Proceed to
E1-6 (CANH) - E1-14 (CANL)	Ignition switch OFF	1 Ω or more	OK
E1-6 (CANH) - E1-14 (CANL)	Ignition switch OFF	Below 1 Ω	NG

OK → **Go to step 12**

NG

6 CONNECT CONNECTOR

(a) Reconnect the yaw rate sensor branch wire connector.

NEXT

7	CHECK CAN BUS LINES FOR SHORT CIRCUIT (STEERING ANGLE SENSOR BRANCH WIRE)

CAN J/C "A" Side (w/ Earth Terminal):

Wire Harness Side:

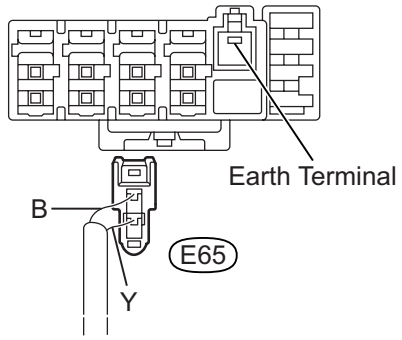

C133849E04

(a) Turn the ignition switch OFF.
(b) Disconnect the E65 steering angle sensor branch wire connector.
NOTICE:
- **Before disconnecting the connector, make a note of where it is connected.**
- **Reconnect the connector to its original position.**

DLC3:

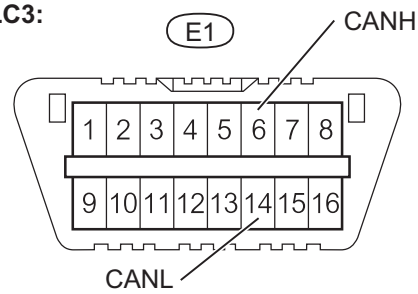

C118856E45

(c) Measure the resistance.
Result

Tester Connection	Condition	Specified Condition	Proceed to
E1-6 (CANH) - E1-14 (CANL)	Ignition switch OFF	1 Ω or more	OK
E1-6 (CANH) - E1-14 (CANL)	Ignition switch OFF	Below 1 Ω	NG

OK → **Go to step 14**

NG

8	CONNECT CONNECTOR

(a) Reconnect the steering angle sensor branch wire connector.

NEXT

9 CHECK CAN BUS LINES FOR SHORT CIRCUIT (ECM MAIN WIRE)

CAN J/C "A" Side (w/ Earth Terminal):

Wire Harness Side:

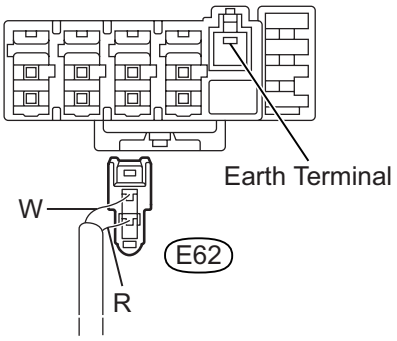

C133849E01

(a) Turn the ignition switch OFF.

(b) Disconnect the E62 ECM main wire connector.

NOTICE:

- **Before disconnecting the connector, make a note of where it is connected.**
- **Reconnect the connector to its original position.**

DLC3:

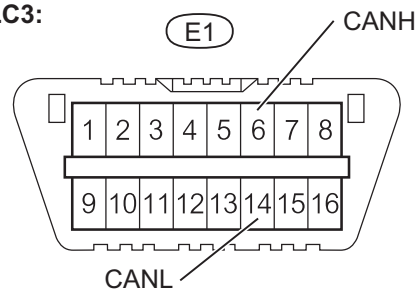

C118856E45

(c) Measure the resistance.

Result

Tester Connection	Condition	Specified Condition	Proceed to
E1-6 (CANH) - E1-14 (CANL)	Ignition switch OFF	1 Ω or more	OK
E1-6 (CANH) - E1-14 (CANL)	Ignition switch OFF	Below 1 Ω	NG

OK → **Go to step 16**

NG

REPLACE CAN J/C

10 CONNECT CONNECTOR

(a) Reconnect the skid control ECU branch wire connector.

NEXT

11	CHECK CAN BUS LINES FOR SHORT CIRCUIT (SKID CONTROL ECU BRANCH WIRE)

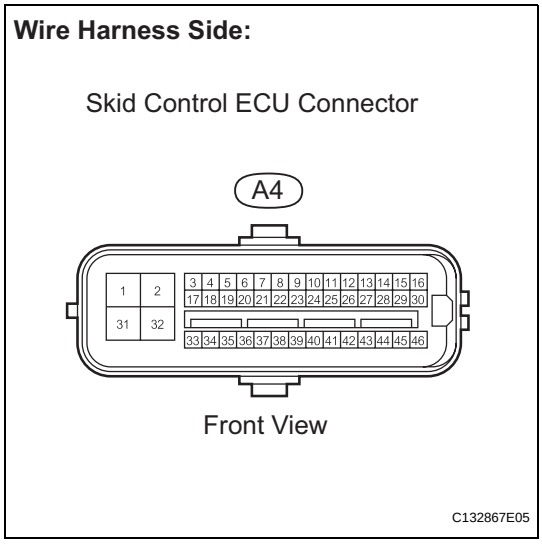

(a) Turn the ignition switch OFF.
(b) Disconnect the A4 skid control ECU connector.

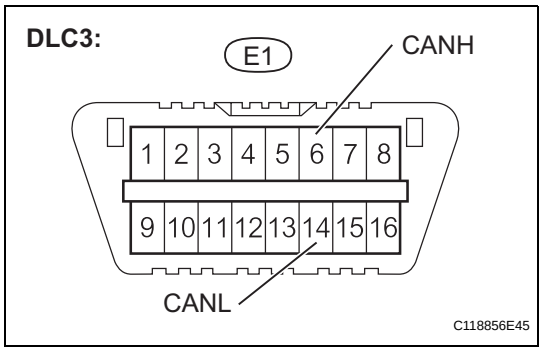

(c) Measure the resistance.
Result

Tester Connection	Condition	Specified Condition	Proceed to
E1-6 (CANH) - E1-14 (CANL)	Ignition switch OFF	1 Ω or more	OK
E1-6 (CANH) - E1-14 (CANL)	Ignition switch OFF	Below 1 Ω	NG

OK → REPLACE MASTER CYLINDER SOLENOID

NG → REPLACE CAN BRANCH WIRE CONNECTED TO SKID CONTROL ECU (CAN-H, CAN-L)

12	CONNECT CONNECTOR

(a) Reconnect the yaw rate sensor branch wire connector.

NEXT

13	CHECK CAN BUS LINES FOR SHORT CIRCUIT (YAW RATE SENSOR BRANCH WIRE)

Wire Harness Side:

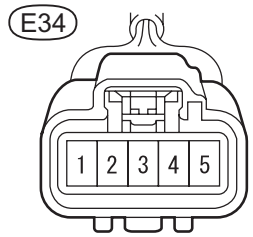

(a) Turn the ignition switch OFF.
(b) Disconnect the E34 yaw rate sensor connector.

DLC3:

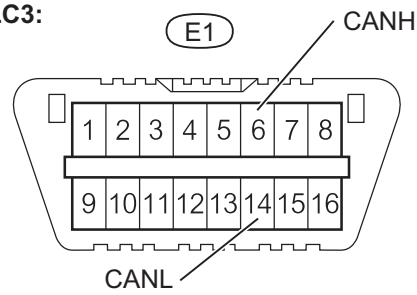

(c) Measure the resistance.
Result

Tester Connection	Condition	Specified Condition	Proceed to
E1-6 (CANH) - E1-14 (CANL)	Ignition switch OFF	1 Ω or more	OK
E1-6 (CANH) - E1-14 (CANL)	Ignition switch OFF	Below 1 Ω	NG

OK → **REPLACE YAW RATE SENSOR**

NG

REPAIR OR REPLACE CAN BRANCH WIRE CONNECTED TO YAW RATE SENSOR (CAN-H, CAN-L)

14	CONNECT CONNECTOR

(a) Reconnect the steering angle sensor branch wire connector.

NEXT

15	CHECK CAN BUS LINES FOR SHORT CIRCUIT (STEERING ANGLE SENSOR BRANCH WIRE)

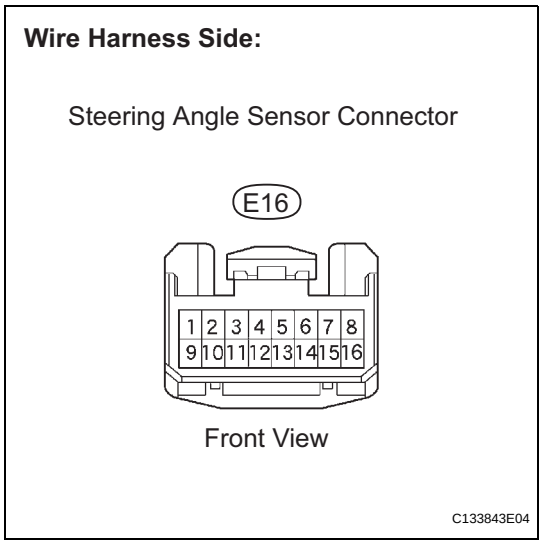

(a) Turn the ignition switch OFF.
(b) Disconnect the E16 steering angle sensor connector.

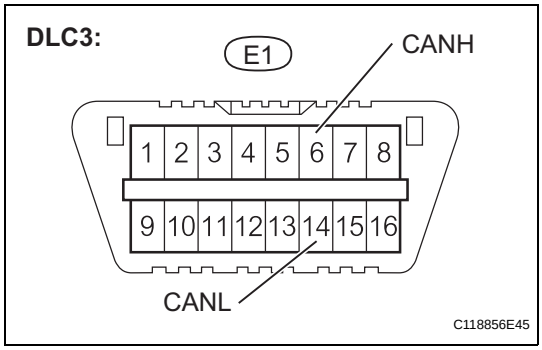

(c) Measure the resistance.
Result

Tester Connection	Condition	Specified Condition	Proceed to
E1-6 (CANH) - E1-14 (CANL)	Ignition switch OFF	1 Ω or more	OK
E1-6 (CANH) - E1-14 (CANL)	Ignition switch OFF	Below 1 Ω	NG

OK → REPLACE STEERING ANGLE SENSOR

NG

REPAIR OR REPLACE CAN BRANCH WIRE CONNECTED TO STEERING ANGLE SENSOR (CAN-H, CAN-L)

16	CONNECT CONNECTOR

(a) Reconnect the ECM main wire connector.

NEXT

17	CHECK CAN BUS LINES FOR SHORT CIRCUIT (ECM MAIN WIRE)

Wire Harness Side:

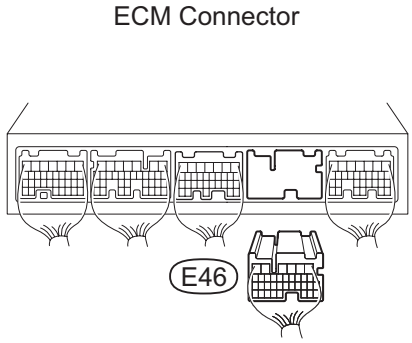

(a) Turn the ignition switch OFF.
(b) Disconnect the E46 ECM connector.

DLC3:

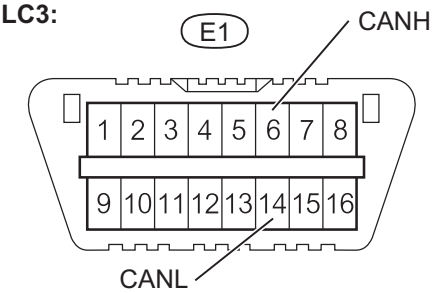

(c) Measure the resistance.
Result

Tester Connection	Condition	Specified Condition	Proceed to
E1-6 (CANH) - E1-14 (CANL)	Ignition switch OFF	1 Ω or more	OK
E1-6 (CANH) - E1-14 (CANL)	Ignition switch OFF	Below 1 Ω	NG

OK → **REPLACE ECM**

NG

REPAIR OR REPLACE CAN MAIN WIRE CONNECTED TO ECM (CAN-H, CAN-L)

Short to B+ in CAN Bus Line

DESCRIPTION

A short to +B is suspected in the CAN bus line when there is continuity between terminals 16 (BAT) and 6 (CANH) or terminals 16 (BAT) and 14 (CANL) of the DLC3.

Symptom	Trouble Area
There is continuity between terminals 16 (BAT) and 6 (CANH) or 16 (BAT) and 14 (CANL) of the DLC3.	• Short to +B in CAN bus line • ECM • Skid control ECU • Yaw rate sensor • Steering angle sensor

WIRING DIAGRAM

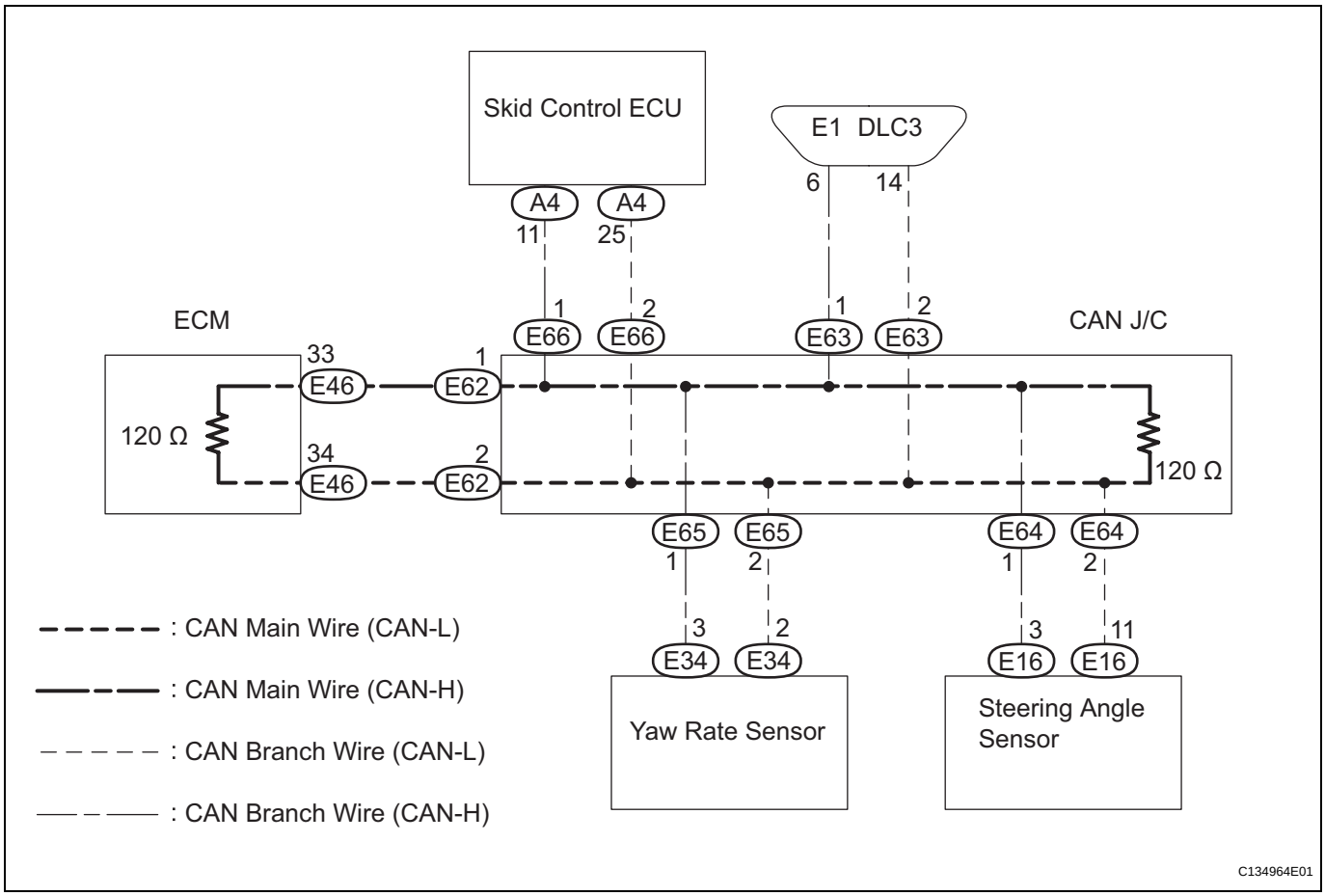

INSPECTION PROCEDURE

NOTICE:

- **Turn the ignition switch off before measuring the resistances of the CAN main wire and the CAN branch wire.**
- **After the ignition switch is turned off, check that the key reminder warning system is not in operation.**
- **Before measuring the resistance, leave the vehicle as is for at least 1 minute and do not operate the ignition switch, any other switches or the doors. If doors need to be opened in order to check connectors, open the doors and leave them open.**

  HINT:

  Operating the ignition switch, any switches or any doors triggers related ECU and sensor communication with the CAN, which causes resistance variation.

1	CHECK CAN BUS LINE FOR SHORT TO +B (DLC3 BRANCH WIRE)

CAN J/C "A" Side (w/ Earth Terminal):

Wire Harness Side:

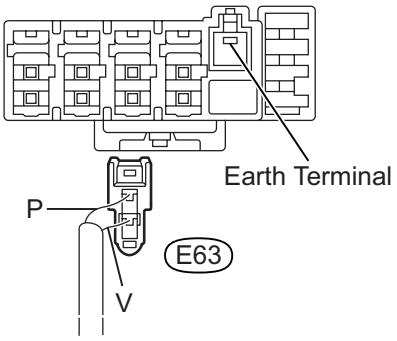

C133849E02

(a) Turn the ignition switch OFF.

(b) Disconnect the E63 DLC3 branch wire connector.

NOTICE:

- **Before disconnecting the connector, make a note of where it is connected.**
- **Reconnect the connector to its original position.**

DLC3:

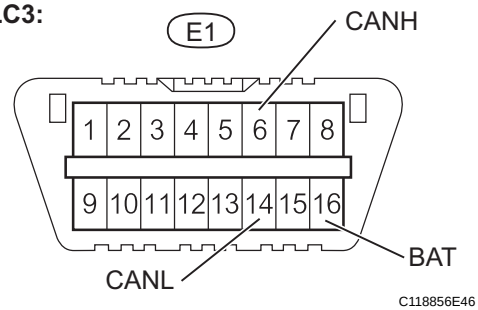

C118856E46

(c) Measure the resistance.

Result

Tester Connection	Condition	Specified Condition	Proceed to
E1-6 (CANH) - E1-16 (BAT)	Ignition switch OFF	1 Ω or more	OK
E1-14 (CANL) - E1-16 (BAT)	Ignition switch OFF	1 Ω or more	OK
E1-6 (CANH) - E1-16 (BAT)	Ignition switch OFF	Below 1 Ω	NG
E1-14 (CANL) - E1-16 (BAT)	Ignition switch OFF	Below 1 Ω	NG

NG → **REPAIR OR REPLACE CAN BRANCH WIRE CONNECTED TO DLC3 (CAN-H, CAN-L)**

OK

2	CONNECT CONNECTOR

(a) Reconnect the DLC3 branch wire connector.

NEXT

3	CHECK CAN BUS LINE FOR SHORT TO +B (SKID CONTROL ECU BRANCH WIRE)

CAN J/C "B" Side (w/o Earth Terminal):

Wire Harness Side:

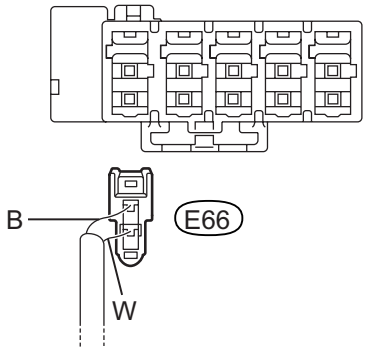

C133850E01

(a) Turn the ignition switch OFF.

(b) Disconnect the E66 skid control ECU branch wire connector.

NOTICE:

- **Before disconnecting the connector, make a note of where it is connected.**
- **Reconnect the connector to its original position.**

DLC3:

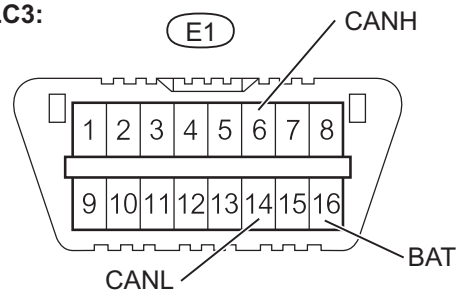

C118856E46

(c) Measure the resistance.

Result

Tester Connection	Condition	Specified Condition	Proceed to
E1-6 (CANH) - E1-16 (BAT)	Ignition switch OFF	1 Ω or more	OK
E1-14 (CANL) - E1-16 (BAT)	Ignition switch OFF	1 Ω or more	OK
E1-6 (CANH) - E1-16 (BAT)	Ignition switch OFF	Below 1 Ω	NG
E1-14 (CANL) - E1-16 (BAT)	Ignition switch OFF	Below 1 Ω	NG

OK → **Go to step 10**

NG

4	CONNECT CONNECTOR

(a) Reconnect the skid control ECU branch wire connector.

NEXT

5 CHECK CAN BUS LINE FOR SHORT TO +B (YAW RATE SENSOR BRANCH WIRE)

CAN J/C "A" Side (w/ Earth Terminal):

Wire Harness Side:

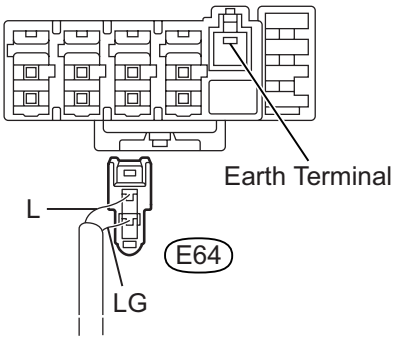

C133849E03

(a) Turn the ignition switch OFF.

(b) Disconnect the E64 yaw rate sensor branch wire connector.

NOTICE:

- **Before disconnecting the connector, make a note of where it is connected.**
- **Reconnect the connector to its original position.**

DLC3:

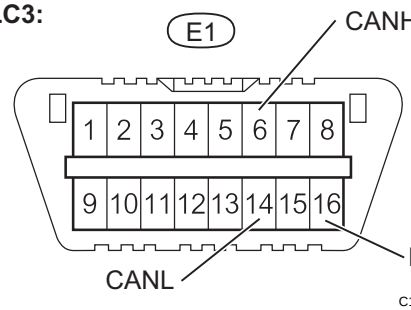

C118856E46

(c) Measure the resistance.

Result

Tester Connection	Condition	Specified Condition	Proceed to
E1-6 (CANH) - E1-16 (BAT)	Ignition switch OFF	1 Ω or more	OK
E1-14 (CANL) - E1-16 (BAT)	Ignition switch OFF	1 Ω or more	OK
E1-6 (CANH) - E1-16 (BAT)	Ignition switch OFF	Below 1 Ω	NG
E1-14 (CANL) - E1-16 (BAT)	Ignition switch OFF	Below 1 Ω	NG

OK → **Go to step 12**

NG

6 CONNECT CONNECTOR

(a) Reconnect the yaw rate sensor branch wire connector.

NEXT

7	CHECK CAN BUS LINE FOR SHORT TO +B (STEERING ANGLE SENSOR BRANCH WIRE)

CAN J/C "A" Side (w/ Earth Terminal):

Wire Harness Side:

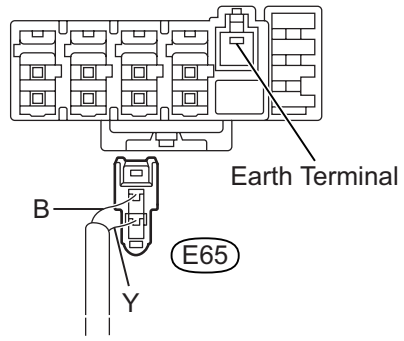

C133849E04

(a) Turn the ignition switch OFF.

(b) Disconnect the E65 steering angle sensor branch wire connector.

NOTICE:

- **Before disconnecting the connector, make a note of where it is connected.**
- **Reconnect the connector to its original position.**

DLC3:

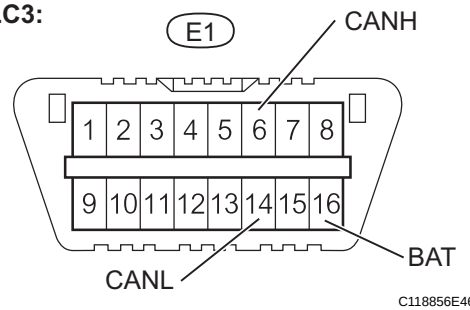

C118856E46

(c) Measure the resistance.

Result

Tester Connection	Condition	Specified Condition	Proceed to
E1-6 (CANH) - E1-16 (BAT)	Ignition switch OFF	1 Ω or more	OK
E1-14 (CANL) - E1-16 (BAT)	Ignition switch OFF	1 Ω or more	OK
E1-6 (CANH) - E1-16 (BAT)	Ignition switch OFF	Below 1 Ω	NG
E1-14 (CANL) - E1-16 (BAT)	Ignition switch OFF	Below 1 Ω	NG

OK → **Go to step 14**

NG

8	CONNECT CONNECTOR

(a) Reconnect the steering angle sensor branch wire connector.

NEXT

9	CHECK CAN BUS LINE FOR SHORT TO +B (ECM MAIN WIRE)

Wire Harness Side:

ECM Connector

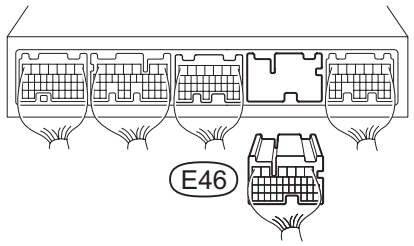

C132870E02

(a) Turn the ignition switch OFF.
(b) Disconnect the E46 ECM connector.

DLC3:

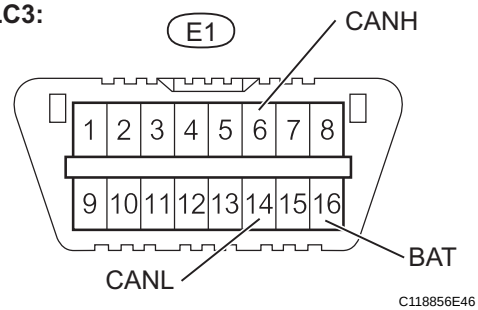

C118856E46

(c) Measure the resistance.
Result

Tester Connection	Condition	Specified Condition	Proceed to
E1-6 (CANH) - E1-16 (BAT)	Ignition switch OFF	1 Ω or more	OK
E1-14 (CANL) - E1-16 (BAT)	Ignition switch OFF	1 Ω or more	OK
E1-6 (CANH) - E1-16 (BAT)	Ignition switch OFF	Below 1 Ω	NG
E1-14 (CANL) - E1-16 (BAT)	Ignition switch OFF	Below 1 Ω	NG

OK → **REPLACE ECM**

NG

REPAIR OR REPLACE CAN MAIN WIRE OR CONNECTOR (ECM - CAN J/C (CAN-H, CAN-L))

10	CONNECT CONNECTOR

(a) Reconnect the skid control ECU branch wire connector.

NEXT

11	CHECK CAN BUS LINE FOR SHORT TO +B (SKID CONTROL ECU BRANCH WIRE)

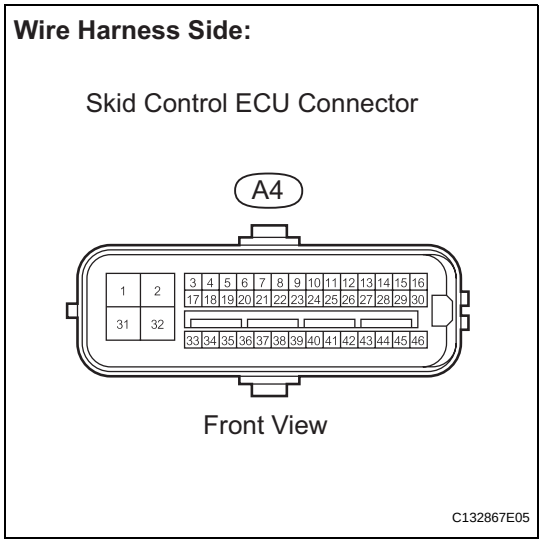

(a) Turn the ignition switch OFF.
(b) Disconnect the A4 skid control ECU connector.

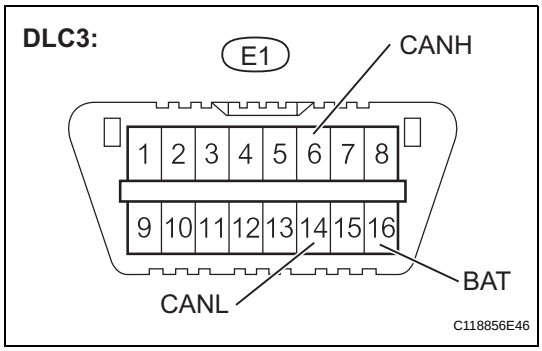

(c) Measure the resistance.
Result

Tester Connection	Condition	Specified Condition	Proceed to
E1-6 (CANH) - E1-16 (BAT)	Ignition switch OFF	1 Ω or more	OK
E1-14 (CANL) - E1-16 (BAT)	Ignition switch OFF	1 Ω or more	OK
E1-6 (CANH) - E1-16 (BAT)	Ignition switch OFF	Below 1 Ω	NG
E1-14 (CANL) - E1-16 (BAT)	Ignition switch OFF	Below 1 Ω	NG

OK → REPLACE MASTER CYLINDER SOLENOID

NG

REPAIR OR REPLACE SKID CONTROL ECU BRANCH LINE OR CONNECTOR (CAN-H, CAN-L)

12	CONNECT CONNECTOR

(a) Reconnect the yaw rate sensor branch wire connector.

NEXT

13 CHECK CAN BUS LINE FOR SHORT TO +B (YAW RATE SENSOR BRANCH WIRE)

Wire Harness Side:

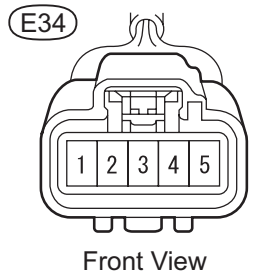

(a) Turn the ignition switch OFF.
(b) Disconnect the E34 yaw rate sensor connector.

DLC3:

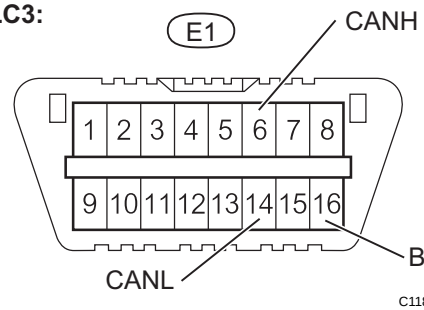

(c) Measure the resistance.
Result

Tester Connection	Condition	Specified Condition	Proceed to
E1-6 (CANH) - E1-16 (BAT)	Ignition switch OFF	1 Ω or more	OK
E1-14 (CANL) - E1-16 (BAT)	Ignition switch OFF	1 Ω or more	OK
E1-6 (CANH) - E1-16 (BAT)	Ignition switch OFF	Below 1 Ω	NG
E1-14 (CANL) - E1-16 (BAT)	Ignition switch OFF	Below 1 Ω	NG

OK → **REPLACE YAW RATE SENSOR**

NG

REPAIR OR REPLACE CAN BRANCH WIRE CONNECTED TO YAW RATE SENSOR (CAN-H, CAN-L)

14 CONNECT CONNECTOR

(a) Reconnect the steering angle sensor branch wire connector.

NEXT

15	CHECK CAN BUS LINE FOR SHORT TO +B (STEERING ANGLE SENSOR BRANCH WIRE)

Wire Harness Side:

Steering Angle Sensor Connector

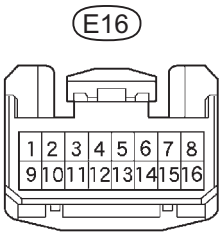

(a) Turn the ignition switch OFF.
(b) Disconnect the E16 steering angle sensor connector.

DLC3:

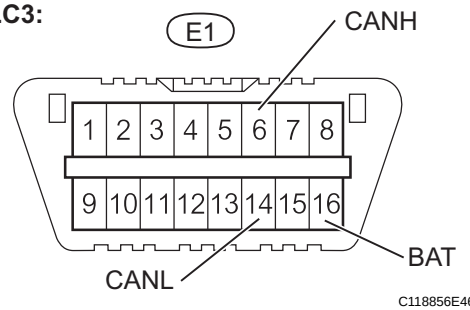

(c) Measure the resistance.
Result

Tester Connection	Condition	Specified Condition	Proceed to
E1-6 (CANH) - E1-16 (BAT)	Ignition switch OFF	1 Ω or more	OK
E1-14 (CANL) - E1-16 (BAT)	Ignition switch OFF	1 Ω or more	OK
E1-6 (CANH) - E1-16 (BAT)	Ignition switch OFF	Below 1 Ω	NG
E1-14 (CANL) - E1-16 (BAT)	Ignition switch OFF	Below 1 Ω	NG

OK → REPLACE STEERING ANGLE SENSOR

NG

REPAIR OR REPLACE CAN BRANCH WIRE CONNECTED TO STEERING ANGLE SENSOR (CAN-H, CAN-L)

Short to GND in CAN Bus Line

DESCRIPTION

A short to GND is suspected in the CAN bus line when there is continuity between terminals 4 (CG) and 6 (CANH) or terminals 4 (CG) and 14 (CANL) of the DLC3.

Symptoms	Trouble Area
There is continuity between terminals 4 (CG) and 6 (CANH) or terminals 4 (CG) and 14 (CANL) of the DLC3.	• Short to GND in CAN bus line • ECM • Skid control ECU • Yaw rate sensor • Steering angle sensor • CAN J/C

WIRING DIAGRAM

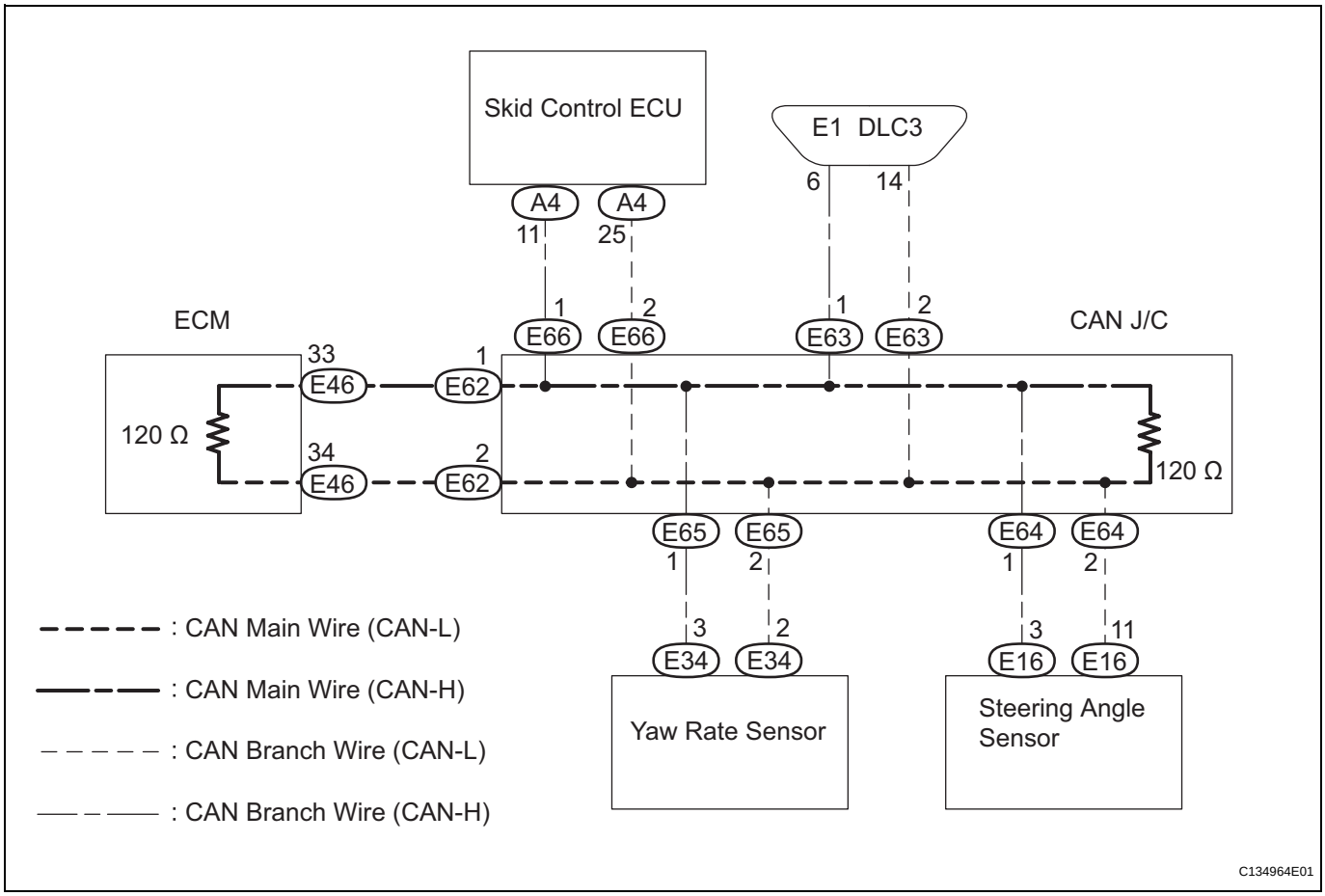

INSPECTION PROCEDURE

NOTICE:

- **Turn the ignition switch off before measuring the resistances of the CAN main wire and the CAN branch wire.**
- **After the ignition switch is turned off, check that the key reminder warning system is not in operation.**

- **Before measuring the resistance, leave the vehicle as is for at least 1 minute and do not operate the ignition switch, any other switches or the doors. If doors need to be opened in order to check connectors, open the doors and leave them open.**
  HINT:
  Operating the ignition switch, any switches or any doors triggers related ECU and sensor communication with the CAN, which causes resistance variation.

1	CHECK CAN BUS LINE FOR SHORT TO GND (DLC3 BRANCH WIRE)

CAN J/C "A" Side (w/ Earth Terminal):

Wire Harness Side:

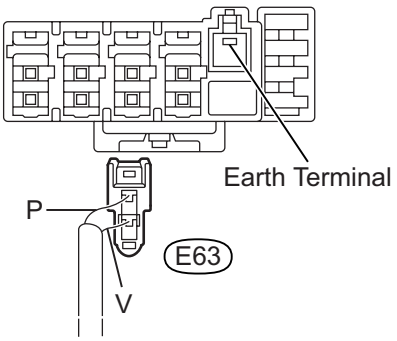

C133849E02

(a) Turn the ignition switch OFF.
(b) Disconnect the E63 DLC3 branch wire connector.
NOTICE:
- **Before disconnecting the connector, make a note of where it is connected.**
- **Reconnect the connector to its original position.**

DLC3:

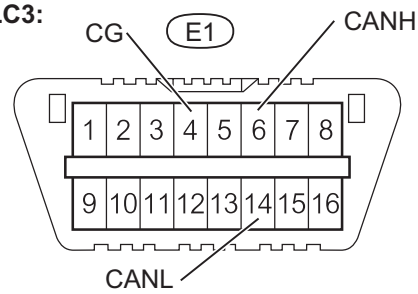

C118856E47

(c) Measure the resistance.
Result

Tester Connection	Condition	Specified Condition	Proceed to
E1-6 (CANH) - E1-4 (CG)	Ignition switch OFF	1 Ω or more	OK
E1-14 (CANL) - E1-4 (CG)	Ignition switch OFF	1 Ω or more	OK
E1-6 (CANH) - E1-4 (CG)	Ignition switch OFF	Below 1 Ω	NG
E1-14 (CANL) - E1-4 (CG)	Ignition switch OFF	Below 1 Ω	NG

NG → **REPAIR OR REPLACE CAN BRANCH WIRE CONNECTED TO DLC3 (CAN-H, CAN-L)**

OK

2	CONNECT CONNECTOR

(a) Reconnect the DLC3 branch wire connector.

NEXT

3 CHECK CAN BUS LINE FOR SHORT TO GND (SKID CONTROL ECU BRANCH WIRE)

CAN J/C "B" Side (w/o Earth Terminal):

Wire Harness Side:

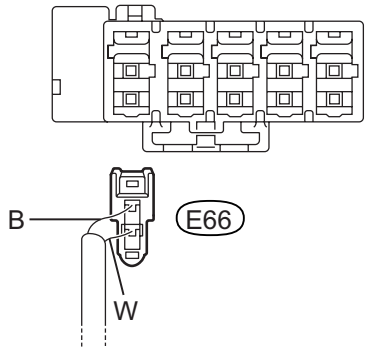

C133850E01

(a) Turn the ignition switch OFF.

(b) Disconnect the E66 skid control ECU branch wire connector.

NOTICE:

- **Before disconnecting the connector, make a note of where it is connected.**
- **Reconnect the connector to its original position.**

DLC3:

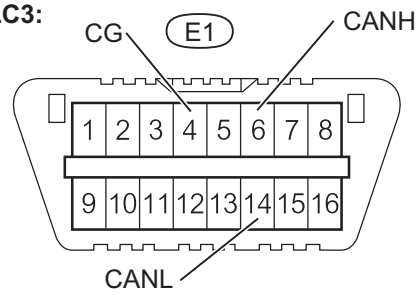

C118856E47

(c) Measure the resistance.

Result

Tester Connection	Condition	Specified Condition	Proceed to
E1-6 (CANH) - E1-4 (CG)	Ignition switch OFF	1 Ω or more	OK
E1-14 (CANL) - E1-4 (CG)	Ignition switch OFF	1 Ω or more	OK
E1-6 (CANH) - E1-4 (CG)	Ignition switch OFF	Below 1 Ω	NG
E1-14 (CANL) - E1-4 (CG)	Ignition switch OFF	Below 1 Ω	NG

OK → **Go to step 10**

NG

4 CONNECT CONNECTOR

(a) Reconnect the skid control ECU branch wire connector.

NEXT

5 CHECK CAN BUS LINE FOR SHORT TO GND (YAW RATE SENSOR BRANCH WIRE)

CAN J/C "A" Side (w/ Earth Terminal):

Wire Harness Side:

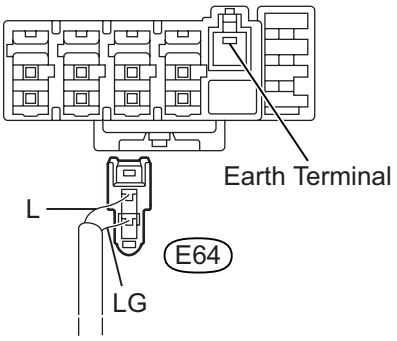

C133849E03

(a) Turn the ignition switch OFF.

(b) Disconnect the E64 yaw rate sensor branch wire connector.

NOTICE:

- **Before disconnecting the connector, make a note of where it is connected.**
- **Reconnect the connector to its original position.**

DLC3:

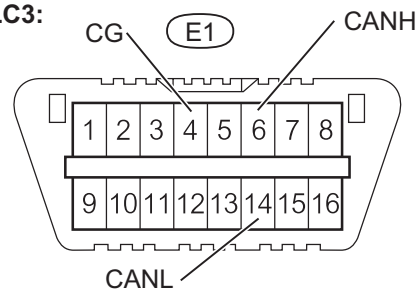

C118856E47

(c) Measure the resistance.

Result

Tester Connection	Condition	Specified Condition	Proceed to
E1-6 (CANH) - E1-4 (CG)	Ignition switch OFF	1 Ω or more	OK
E1-14 (CANL) - E1-4 (CG)	Ignition switch OFF	1 Ω or more	OK
E1-6 (CANH) - E1-4 (CG)	Ignition switch OFF	Below 1 Ω	NG
E1-14 (CANL) - E1-4 (CG)	Ignition switch OFF	Below 1 Ω	NG

NG → **Go to step 12**

OK

6 CONNECT CONNECTOR

(a) Reconnect the yaw rate sensor branch wire connector.

NEXT

7	CHECK CAN BUS LINE FOR SHORT TO GND (STEERING ANGLE SENSOR BRANCH WIRE)

CAN J/C "A" Side (w/ Earth Terminal):

Wire Harness Side:

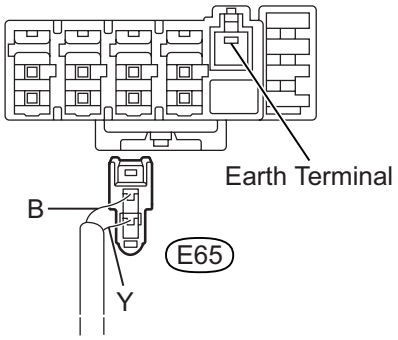

C133849E04

(a) Turn the ignition switch OFF.
(b) Disconnect the E65 steering angle sensor branch wire connector.
NOTICE:
- **Before disconnecting the connector, make a note of where it is connected.**
- **Reconnect the connector to its original position.**

DLC3:

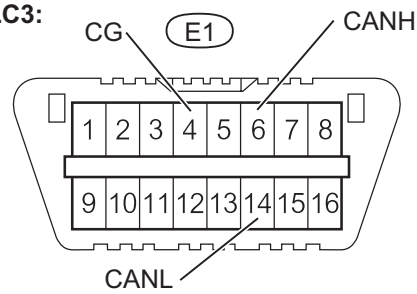

C118856E47

(c) Measure the resistance.
Result

Tester Connection	Condition	Specified Condition	Proceed to
E1-6 (CANH) - E1-4 (CG)	Ignition switch OFF	1 Ω or more	OK
E1-14 (CANL) - E1-4 (CG)	Ignition switch OFF	1 Ω or more	OK
E1-6 (CANH) - E1-4 (CG)	Ignition switch OFF	Below 1 Ω	NG
E1-14 (CANL) - E1-4 (CG)	Ignition switch OFF	Below 1 Ω	NG

OK → **Go to step 14**

NG

8	CONNECT CONNECTOR

(a) Reconnect the steering angle sensor branch wire connector.

NEXT

9	CHECK CAN BUS LINE FOR SHORT TO GND (ECM MAIN WIRE)

CAN J/C "A" Side (w/ Earth Terminal):

Wire Harness Side:

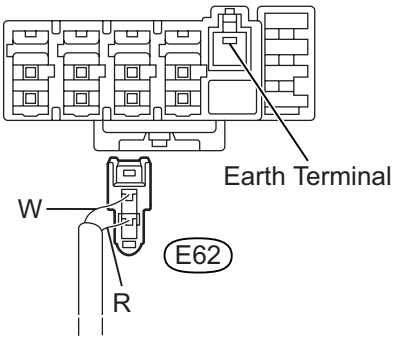

C133849E01

(a) Turn the ignition switch OFF.

(b) Disconnect the E62 ECM main wire connector.

NOTICE:

- **Before disconnecting the connector, make a note of where it is connected.**
- **Reconnect the connector to its original position.**

DLC3:

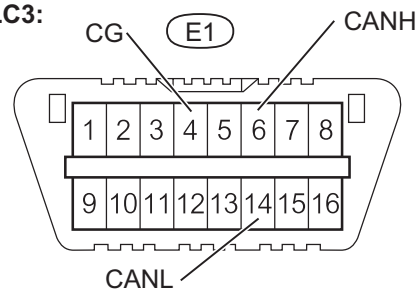

C118856E47

(c) Measure the resistance.

Result

Tester Connection	Condition	Specified Condition	Proceed to
E1-6 (CANH) - E1-4 (CG)	Ignition switch OFF	1 Ω or more	OK
E1-14 (CANL) - E1-4 (CG)	Ignition switch OFF	1 Ω or more	OK
E1-6 (CANH) - E1-4 (CG)	Ignition switch OFF	Below 1 Ω	NG
E1-14 (CANL) - E1-4 (CG)	Ignition switch OFF	Below 1 Ω	NG

OK → **Go to step 16**

NG

REPLACE CAN J/C

10	CONNECT CONNECTOR

(a) Reconnect the skid control ECU connector.

NEXT

11 CHECK CAN BUS LINE FOR SHORT TO GND (SKID CONTROL ECU BRANCH WIRE)

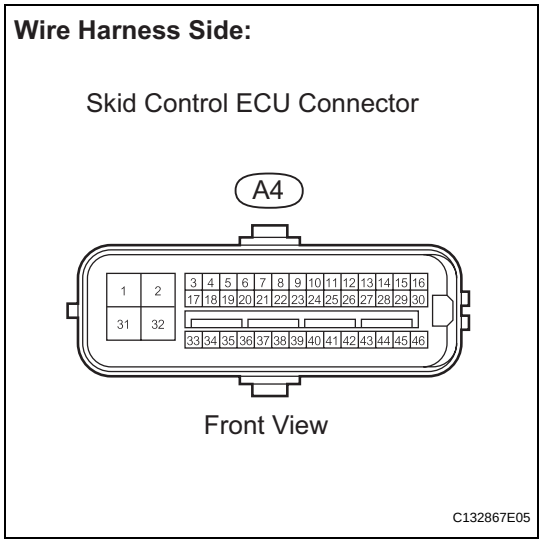

(a) Turn the ignition switch OFF.
(b) Disconnect the A4 skid control ECU connector.

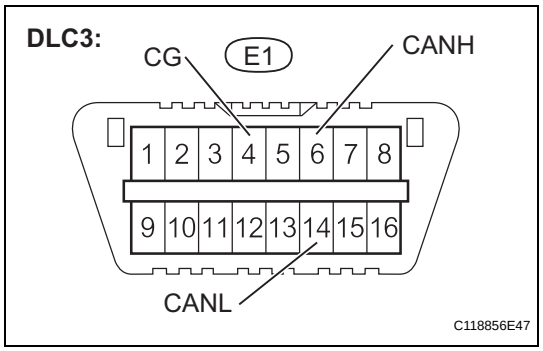

(c) Measure the resistance.
Result

Tester Connection	Condition	Specified Condition	Proceed to
E1-6 (CANH) - E1-4 (CG)	Ignition switch OFF	1 Ω or more	OK
E1-14 (CANL) - E1-4 (CG)	Ignition switch OFF	1 Ω or more	OK
E1-6 (CANH) - E1-4 (CG)	Ignition switch OFF	Below 1 Ω	NG
E1-14 (CANL) - E1-4 (CG)	Ignition switch OFF	Below 1 Ω	NG

OK → **REPLACE MASTER CYLINDER SOLENOID**

NG

REPAIR OR REPLACE SKID CONTROL ECU BRANCH LINE OR CONNECTOR (CAN-H, CAN-L)

12 CONNECT CONNECTOR

(a) Reconnect the yaw rate sensor branch wire connector.

NEXT

13	CHECK CAN BUS LINE FOR SHORT TO GND (YAW RATE SENSOR BRANCH WIRE)

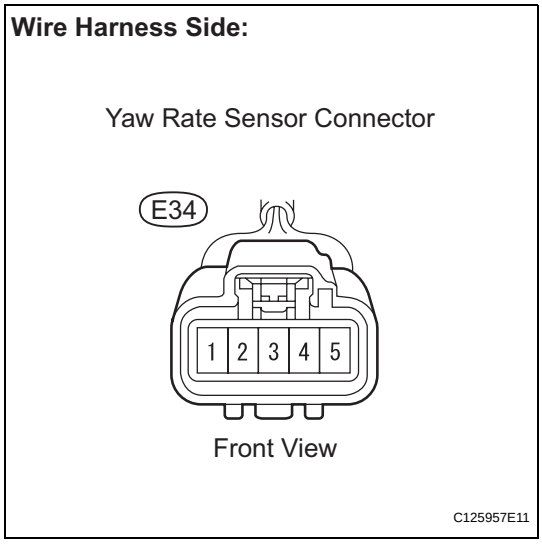

(a) Turn the ignition switch OFF.
(b) Disconnect the E34 yaw rate sensor connector.

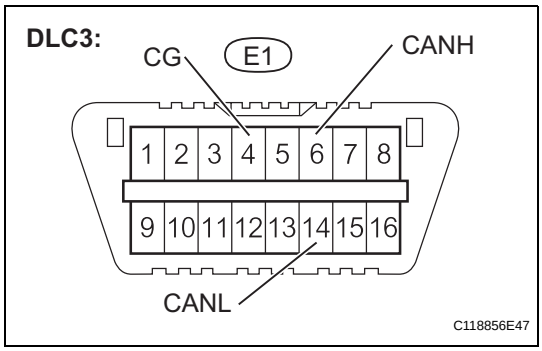

(c) Measure the resistance.
Result

Tester Connection	Condition	Specified Condition	Proceed to
E1-6 (CANH) - E1-4 (CG)	Ignition switch OFF	1 Ω or more	OK
E1-14 (CANL) - E1-4 (CG)	Ignition switch OFF	1 Ω or more	OK
E1-6 (CANH) - E1-4 (CG)	Ignition switch OFF	Below 1 Ω	NG
E1-14 (CANL) - E1-4 (CG)	Ignition switch OFF	Below 1 Ω	NG

OK → REPLACE YAW RATE SENSOR

NG

REPAIR OR REPLACE CAN BRANCH WIRE CONNECTED TO YAW RATE SENSOR (CAN-H, CAN-L)

14	CONNECT CONNECTOR

(a) Reconnect the steering angle sensor branch wire connector.

NEXT

15	CHECK CAN BUS LINE FOR SHORT TO GND (STEERING ANGLE SENSOR BRANCH WIRE)

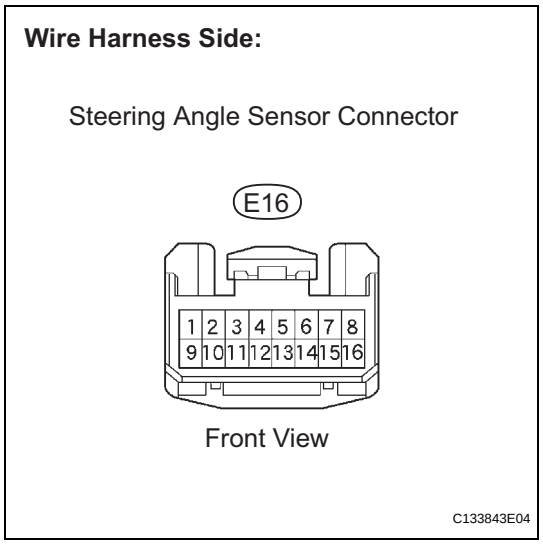

(a) Turn the ignition switch OFF.
(b) Disconnect the E16 steering angle sensor connector.

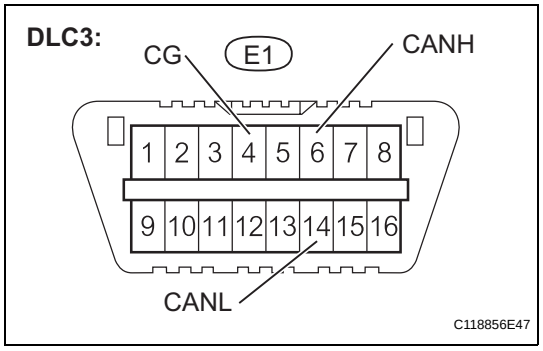

(c) Measure the resistance.
Result

Tester Connection	Condition	Specified Condition	Proceed to
E1-6 (CANH) - E1-4 (CG)	Ignition switch OFF	1 Ω or more	OK
E1-14 (CANL) - E1-4 (CG)	Ignition switch OFF	1 Ω or more	OK
E1-6 (CANH) - E1-4 (CG)	Ignition switch OFF	Below 1 Ω	NG
E1-14 (CANL) - E1-4 (CG)	Ignition switch OFF	Below 1 Ω	NG

OK → REPLACE STEERING ANGLE SENSOR

NG

REPAIR OR REPLACE CAN BRANCH WIRE CONNECTED TO STEERING ANGLE SENSOR (CAN-H, CAN-L)

16	CONNECT CONNECTOR

(a) Reconnect the ECM main wire connector.

NEXT

17	CHECK CAN BUS LINE FOR SHORT TO GND (ECM MAIN WIRE)

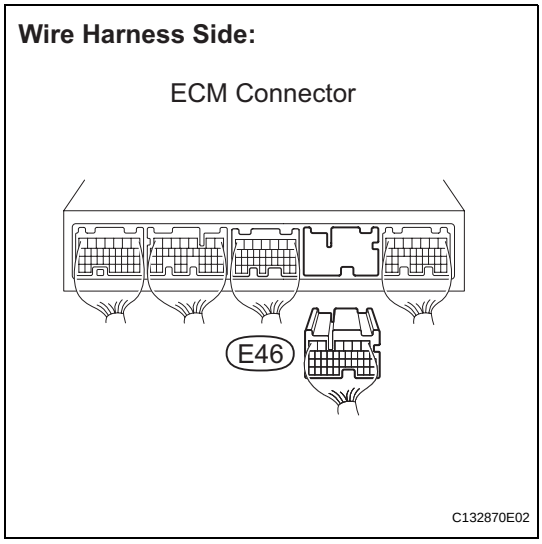

(a) Turn the ignition switch OFF.
(b) Disconnect the E46 ECM connector.

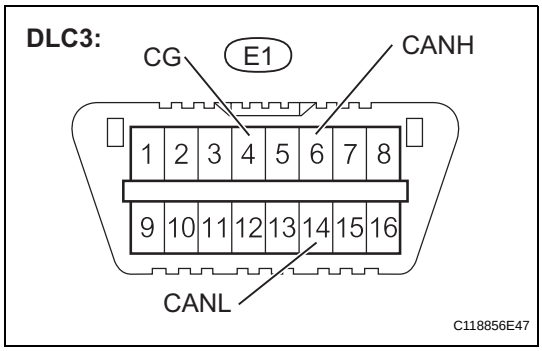

(c) Measure the resistance.
Result

Tester Connection	Condition	Specified Condition	Proceed to
E1-6 (CANH) - E1-4 (CG)	Ignition switch OFF	1 Ω or more	OK
E1-14 (CANL) - E1-4 (CG)	Ignition switch OFF	1 Ω or more	OK
E1-6 (CANH) - E1-4 (CG)	Ignition switch OFF	Below 1 Ω	NG
E1-14 (CANL) - E1-4 (CG)	Ignition switch OFF	Below 1 Ω	NG

OK → REPLACE ECM

NG

REPAIR OR REPLACE CAN MAIN WIRE CONNECTED TO ECM (CAN-H, CAN-L)

Open in One Side of CAN Branch Line

DESCRIPTION

If 2 or more ECUs and/or sensors do not appear on the intelligent tester "BUS CHECK" screen via the CAN VIM, one side of the CAN branch wire may be open. (one side of the CAN-H [branch wire] / CANL [branch wire] of the ECU and/or sensor is open.)

Symptom	Trouble Area
2 or more ECUs and/or sensors do not appear on intelligent tester "BUS CHECK" screen via CAN VIM.	• Open in one side of CAN branch wire • Skid control ECU • Yaw rate sensor • Steering angle sensor

WIRING DIAGRAM

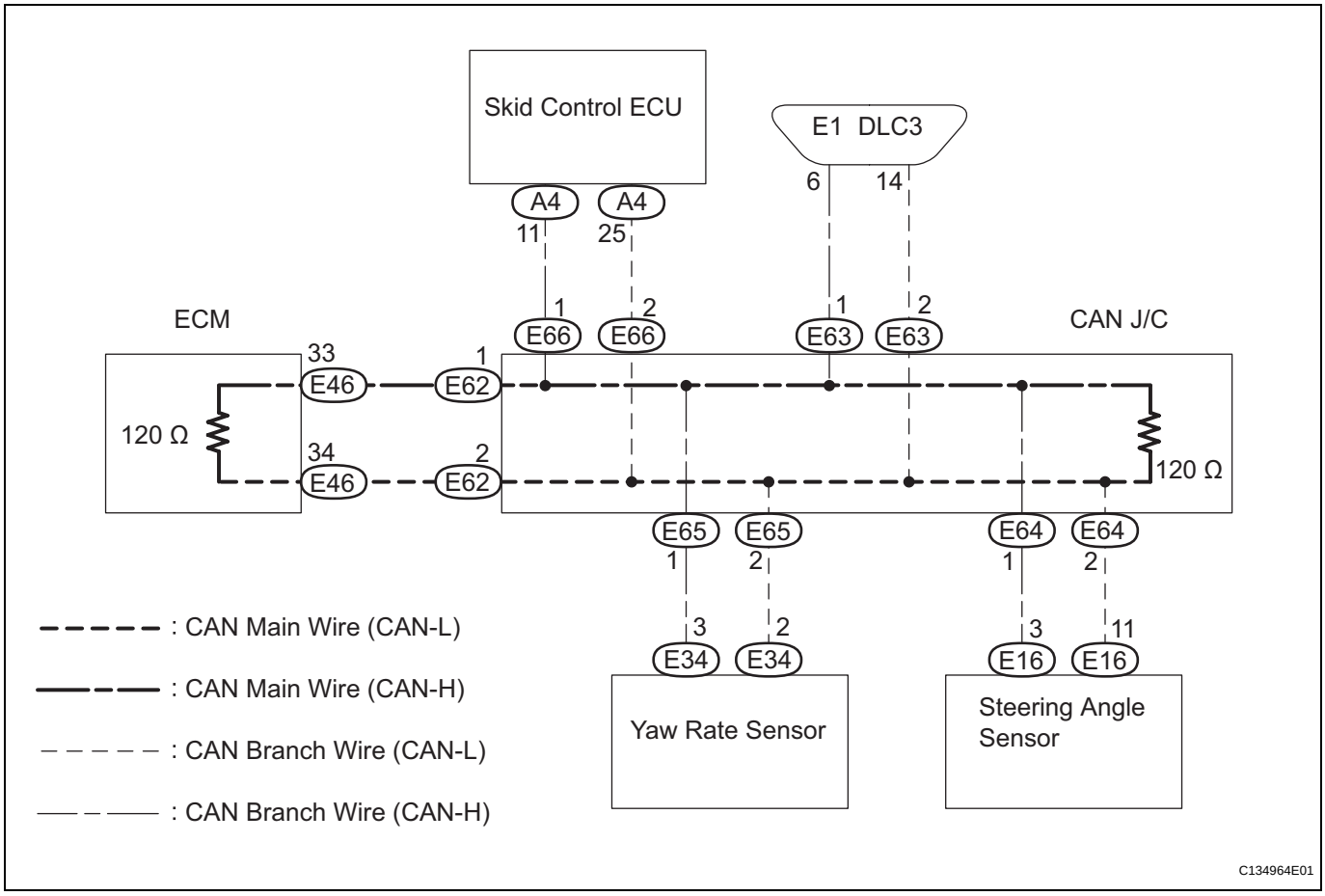

INSPECTION PROCEDURE

NOTICE:

- **Turn the ignition switch off before measuring the resistances of the CAN main wire and the CAN branch wire.**
- **After the ignition switch is turned off, check that the key reminder warning system is not in operation.**

- **Before measuring the resistance, leave the vehicle as is for at least 1 minute and do not operate the ignition switch, any other switches or the doors. If doors need to be opened in order to check connectors, open the doors and leave them open.**
  HINT:
  Operating the ignition switch, any switches or any doors triggers related ECU and sensor communication with the CAN, which causes resistance variation.

HINT:

- The following is the troubleshooting procedure of an open in either CANH or CANL of the ECU A (SENSOR A).
- Perform the following inspection for the ECUs (sensors) which are not displayed on the intelligent tester. If malfunctions cannot be identified, then perform the following inspection for the ECUs (sensors) connected to CAN communication.

1	CHECK OPEN IN ONE SIDE OF CAN BRANCH LINE (SKID CONTROL ECU)

Wire Harness Side:

Skid Control ECU Connector

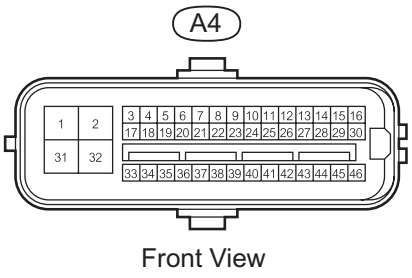

C132867E05

(a) Disconnect the skid control ECU connector.
(b) Select "BUS CHECK" on the intelligent tester via the CAN VIM (See page CA-14).
Result

Result	Proceed to
ABS/VSC/TRAC not displayed on the intelligent tester.	A
Several ECUs and sensors other than ABS/VSC/TRAC not displayed on intelligent tester.	B

B → **Go to step 3**

A

2	CHECK OPEN IN ONE SIDE OF CAN BRANCH LINE (SKID CONTROL ECU BRANCH WIRE)

Wire Harness Side:

Skid Control ECU Connector

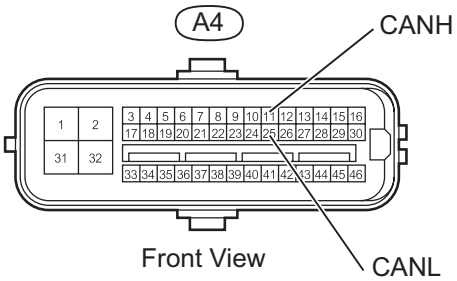

C132867E01

(a) Measure the resistance.
Standard resistance.

Tester Connection	Condition	Specified Condition
A4-11 (CANH) - A4-25 (CANL)	Ignition switch OFF	54 to 69 Ω

NG → **REPAIR OR REPLACE CAN BRANCH WIRE CONNECTED TO SKID CONTROL ECU (CAN-H, CAN-L)**

CA

OK

REPLACE MASTER CYLINDER SOLENOID

3 CHECK OPEN IN ONE SIDE OF CAN BRANCH LINE (YAW RATE SENSOR)

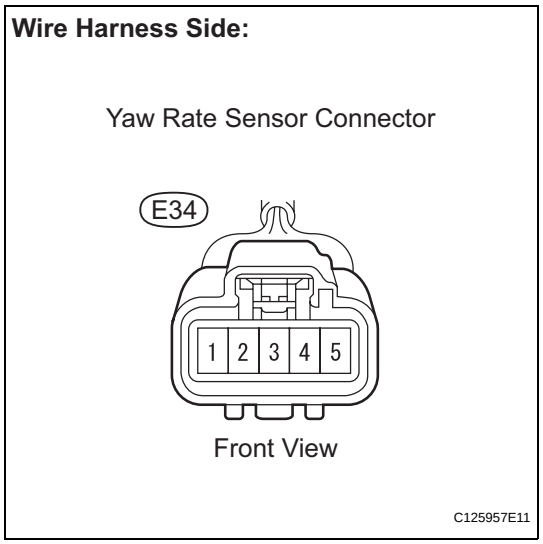

(a) Disconnect the yaw rate sensor connector.
(b) Select "BUS CHECK" on the intelligent tester via the CAN VIM (See page CA-14).

Result

Result	Proceed to
YAW/DECELERATE not displayed on the intelligent tester.	A
Several ECUs and sensors other than YAW/DECELERATE not displayed on intelligent tester.	B

B → **Go to step 5**

A

4 CHECK OPEN IN ONE SIDE OF CAN BRANCH LINE (YAW RATE SENSOR BRANCH WIRE)

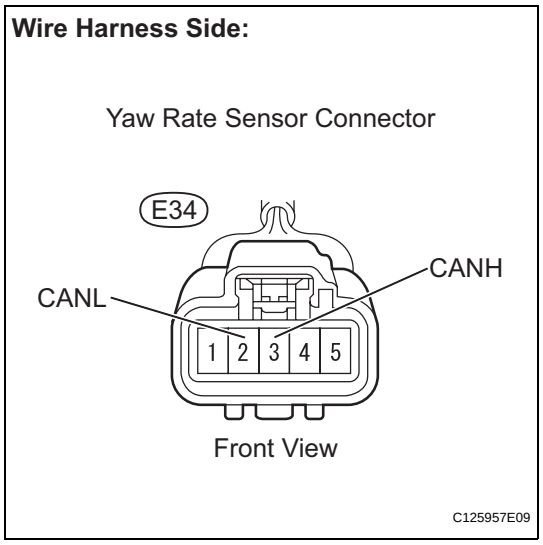

(a) Measure the resistance.

Standard resistance.

Tester Connection	Condition	Specified Condition
E34-3 (CANH) - E34-2 (CANL)	Ignition switch OFF	54 to 69 Ω

NG → **REPAIR OR REPLACE CAN BRANCH WIRE CONNECTED TO YAW RATE SENSOR (CAN-H, CAN-L)**

OK

REPLACE YAW RATE SENSOR

5	CHECK OPEN IN ONE SIDE OF CAN BRANCH LINE (STEERING ANGLE SENSOR BRANCH WIRE)

Wire Harness Side:

Steering Angle Sensor Connector

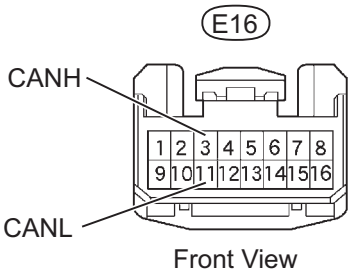

C133843E02

(a) Disconnect the steering angle sensor connector.
(b) Measure the resistance.
Standard resistance.

Tester Connection	Condition	Specified Condition
E16-3 (CANH) - E16-11 (CANL)	Ignition switch OFF	54 to 69 Ω

NG → **REPAIR OR REPLACE CAN BRANCH WIRE CONNECTED TO STEERING ANGLE SENSOR (CAN-H, CAN-L)**

OK

REPLACE STEERING ANGLE SENSOR

CHARGING SYSTEM

PRECAUTION

1. PRECAUTION

(a) Check that the battery cables are connected to the correct terminals.
(b) Disconnect the battery cables if the battery is charged quickly.
(c) Do not perform tests using a high voltage insulation resistance tester.
(d) Never disconnect the cable from the battery while the engine is running.
(e) Check that the charging cables are tightly connected to terminals B of the generator and the fuse box.
(f) Do not check whether the generator generates current or not while terminal F is connected to the other terminals.

PARTS LOCATION

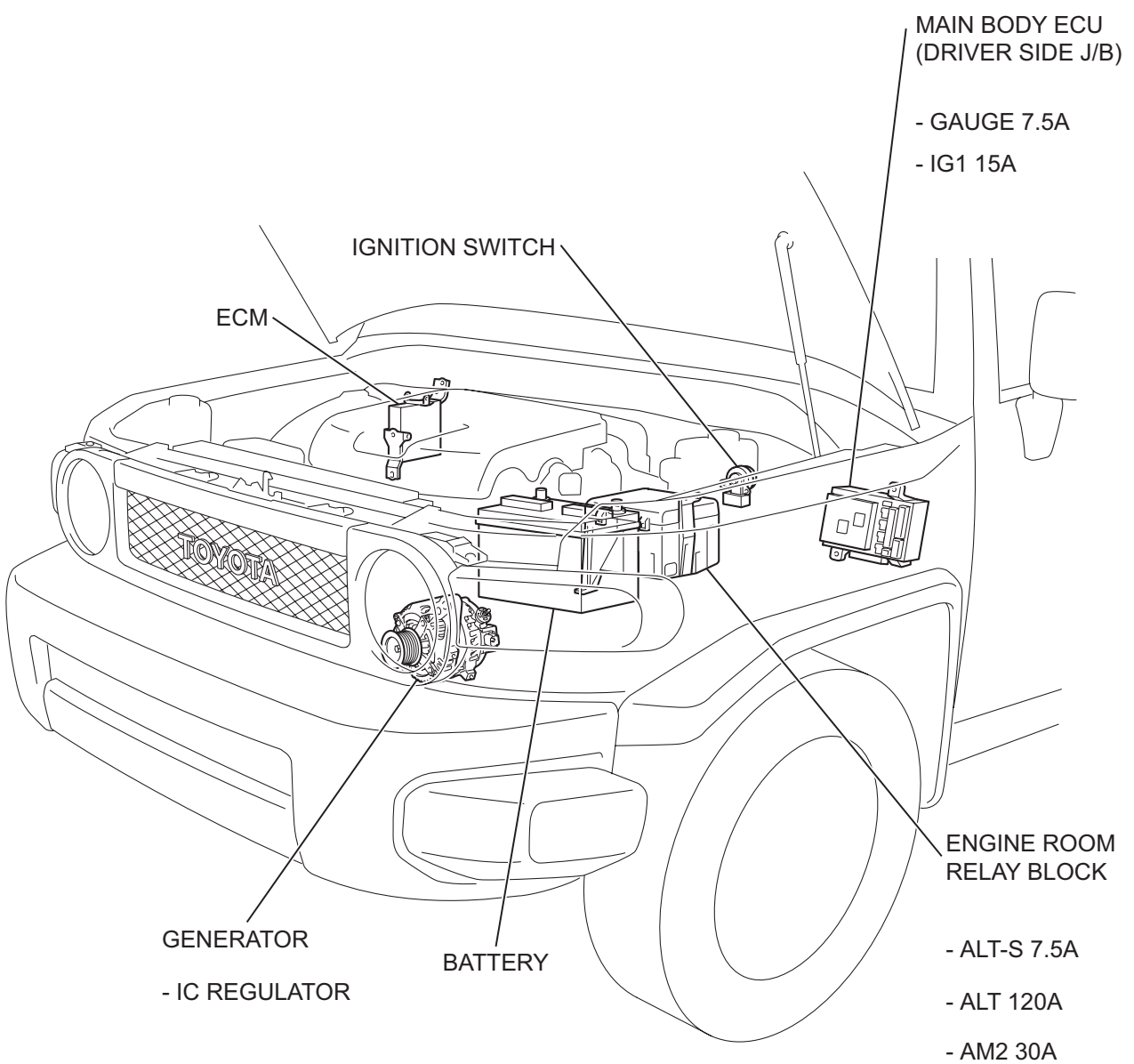

CH

Y

A129970E01

SYSTEM DIAGRAM

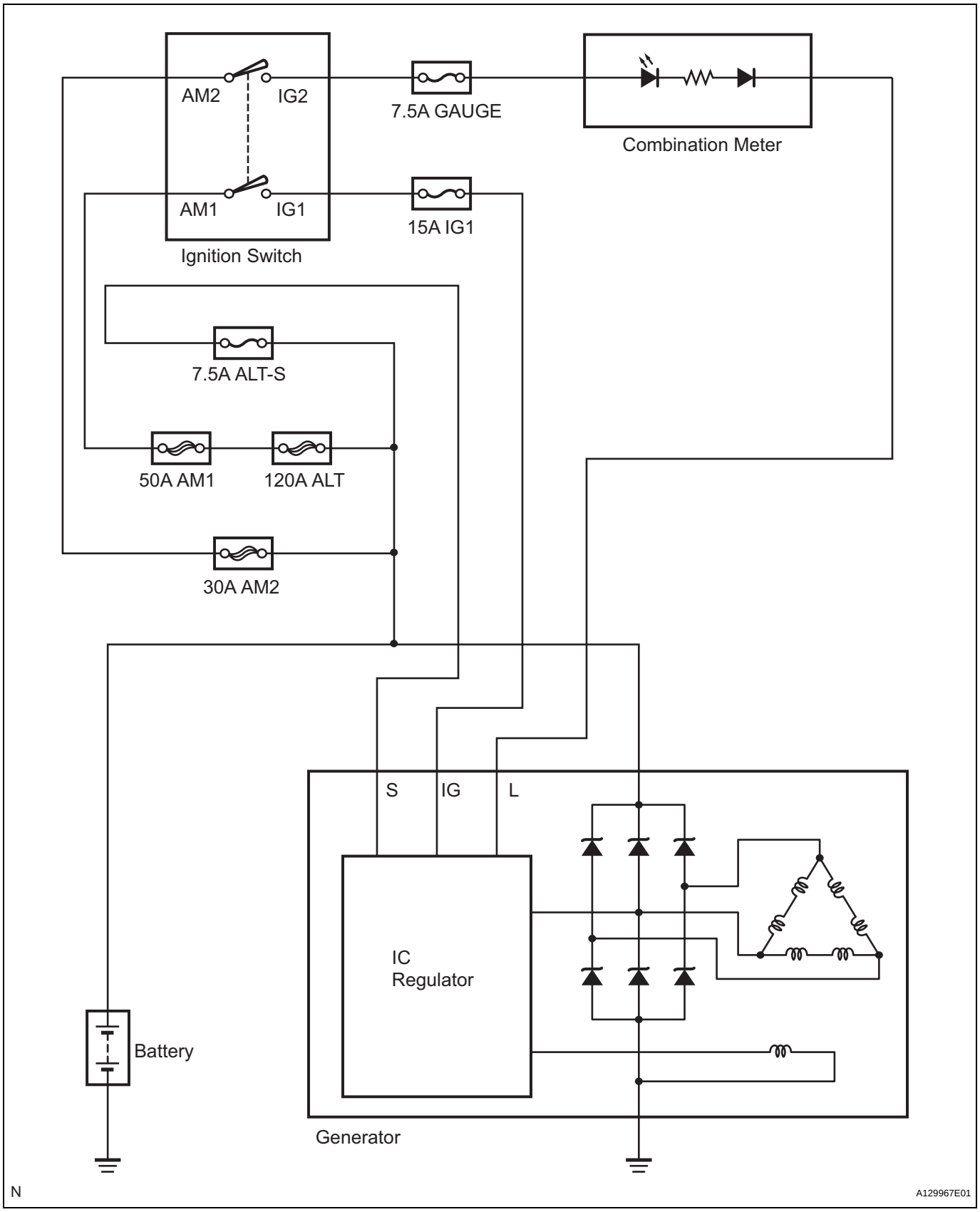

CH

ON-VEHICLE INSPECTION

NOTICE:
If the battery is weak or if the engine is difficult to start, recharge the battery and perform inspections again before returning the vehicle to the customer.

1. INSPECT BATTERY

(a) Check the battery for damage and deformation. If severe damage, deformation or leakage is found, replace the battery.

(b) Check the voltage of electrolyte in each cell.

(1) For batteries that are maintenance-free:

- If the electrolyte volume is below the lower line, replace the battery.
- If the electrolyte volume is above the lower line, check the battery voltage when cranking the engine.

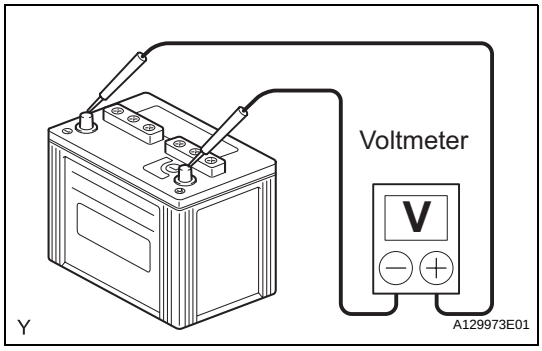

(c) Check the voltage.

(1) If it has been less than 20 minutes since you stopped driving the vehicle or since the engine was stopped, turn the ignition switch and electrical systems (headlight, blower motor, rear defogger etc.) to the ON position for 60 seconds. This will remove the surface charge on the battery.

(2) Turn the ignition switch to OFF.

(3) Turn the electrical systems to OFF.

(4) Using a voltmeter, measure the battery voltage between the negative (-) and positive (+) terminals of the battery.

Standard voltage:
12.6 to 12.9 V at 20°C (68°F)

If the result is not as specified, replace the battery.

(d) Check that the indicator is as shown in the illustration.

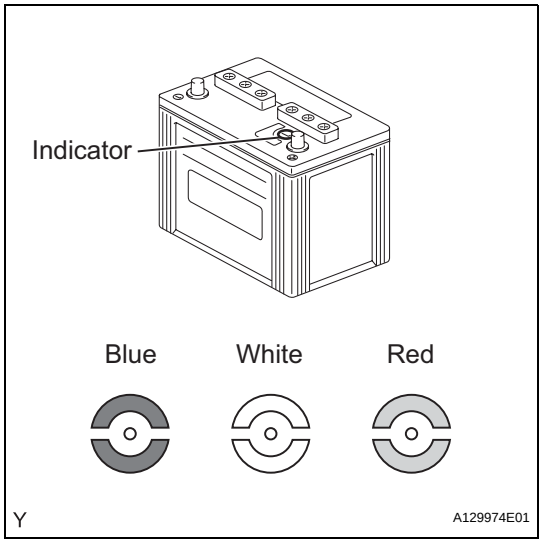

Indicator Color	Condition
Blue	Ready
White	Charging Necessary
Red	Have battery checked by Toyota dealer

2. INSPECT BATTERY TERMINALS, FUSIBLE LINK AND FUSES

(a) Visually check the battery terminals.

(1) Check that the battery terminals are not loose or corroded.

(b) Visually check the fusible link and fuses.

(1) Check that there is continuity between the fusible links, high current fuses and regular fuses.

CH

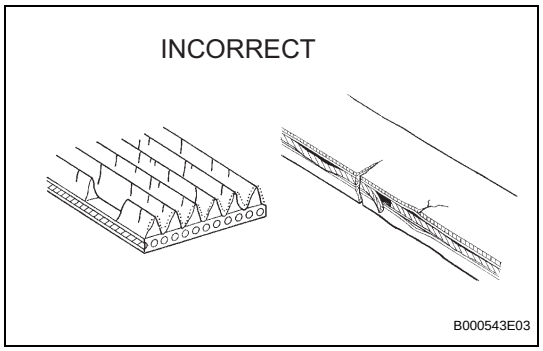

3. INSPECT V-RIBBED BELT

(a) Visually check the belt for excessive wear, frayed cords, etc.
- If any defects are found, replace the V-ribbed belt.
- Cracks on the rib side of the belt are considered acceptable. If the belt has chunks missing from the ribs, it should be replaced.

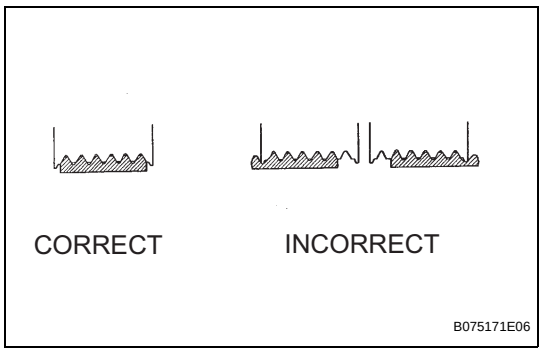

(b) Check that the belt fits properly in the ribbed grooves. Confirm by hand that the belt has not slipped out of the grooves on the bottom of the pulley.

4. INSPECT GENERATOR WIRING

(a) Visually check the generator wiring.
(1) Check that the wiring is in good condition.

5. INSPECT ABNORMAL NOISES

(a) Listen for abnormal noises from the generator.
(1) Check that no abnormal noises are heard from the generator while the engine is running.

6. INSPECT CHARGE WARNING LIGHT CIRCUIT

(a) Turn the ignition switch ON. Check that the charge warning light comes on.
(b) Start the engine and check that the light goes off. If the light does not operate as specified, troubleshoot the charge warning light circuit.

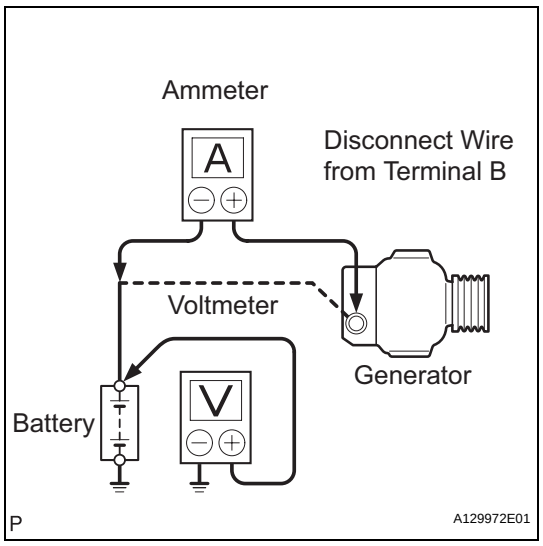

7. INSPECT CHARGING CIRCUIT WITHOUT LOAD

(a) If a tester is not available, connect a voltmeter and ammeter to the charging circuit as follows.
(1) Disconnect the wire from terminal B of the generator, then connect it to the negative (-) lead of the ammeter.
(2) Connect the positive (+) lead of the ammeter to terminal B of the generator.
(3) Connect the positive (+) lead of the voltmeter to positive (+) terminal of the battery.
(4) Ground the negative (-) lead of the voltmeter.
(b) Check the charging circuit.
(1) Maintain the engine speed at 2,000 rpm and check the reading on the ammeter and voltmeter.
Standard:
10 A or less for current
13.2 to 14.8 V for voltage

8. INSPECT CHARGING CIRCUIT WITH LOAD

(a) With the engine running at 2,000 rpm, turn the high beam headlights ON and turn the heater blower switch to the HI position.

CH

(b) Check the reading on the ammeter.
Standard current:
30 A or more
- If the ammeter reading is less than the standard current, repair the generator.
- If the battery is fully charged, the indication will sometimes be less than the standard current.
- In this case, increase electrical load by operating devices such as the wiper motor and rear window defogger. Then recheck the reading on the ammeter.

GENERATOR

COMPONENTS

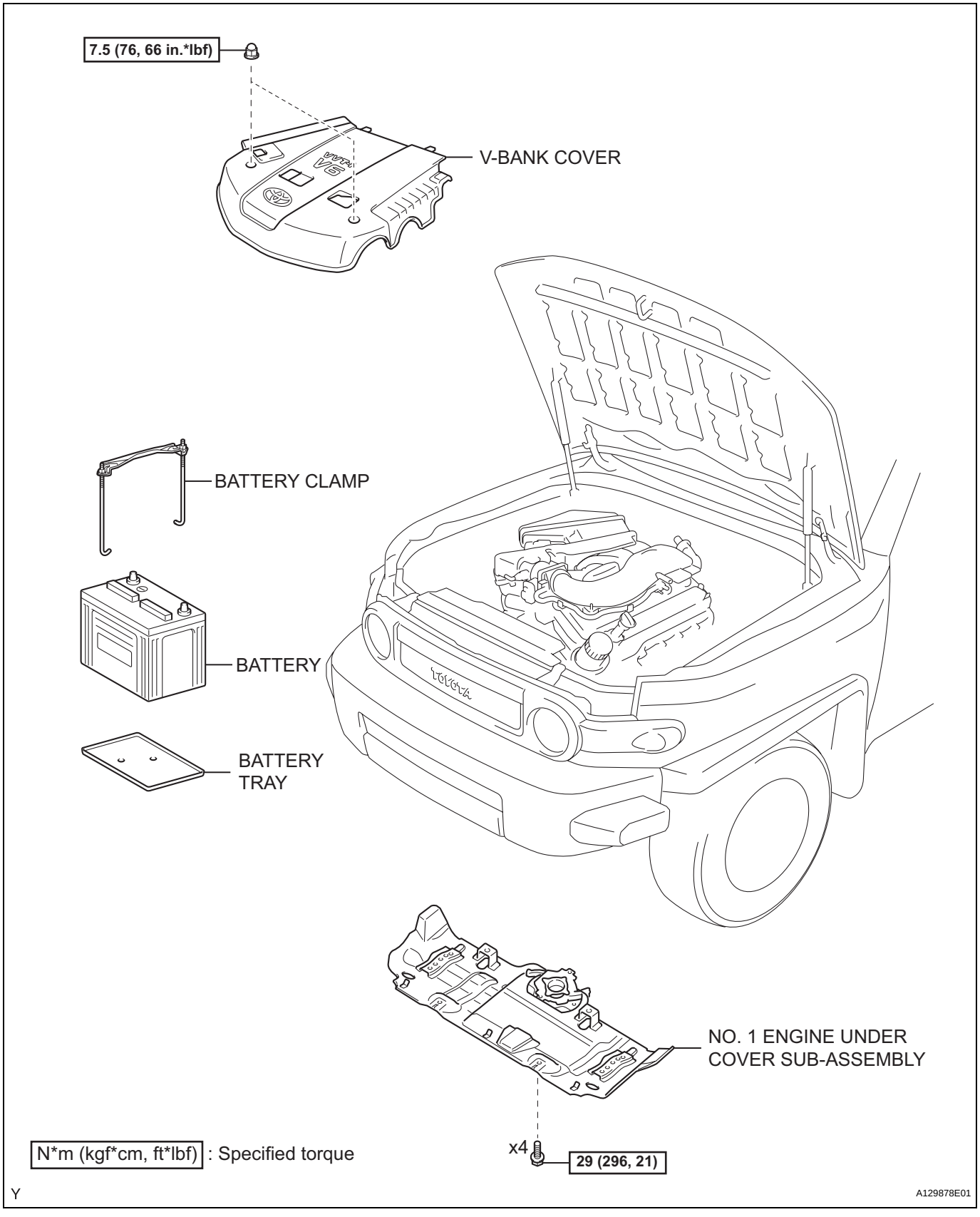

CH

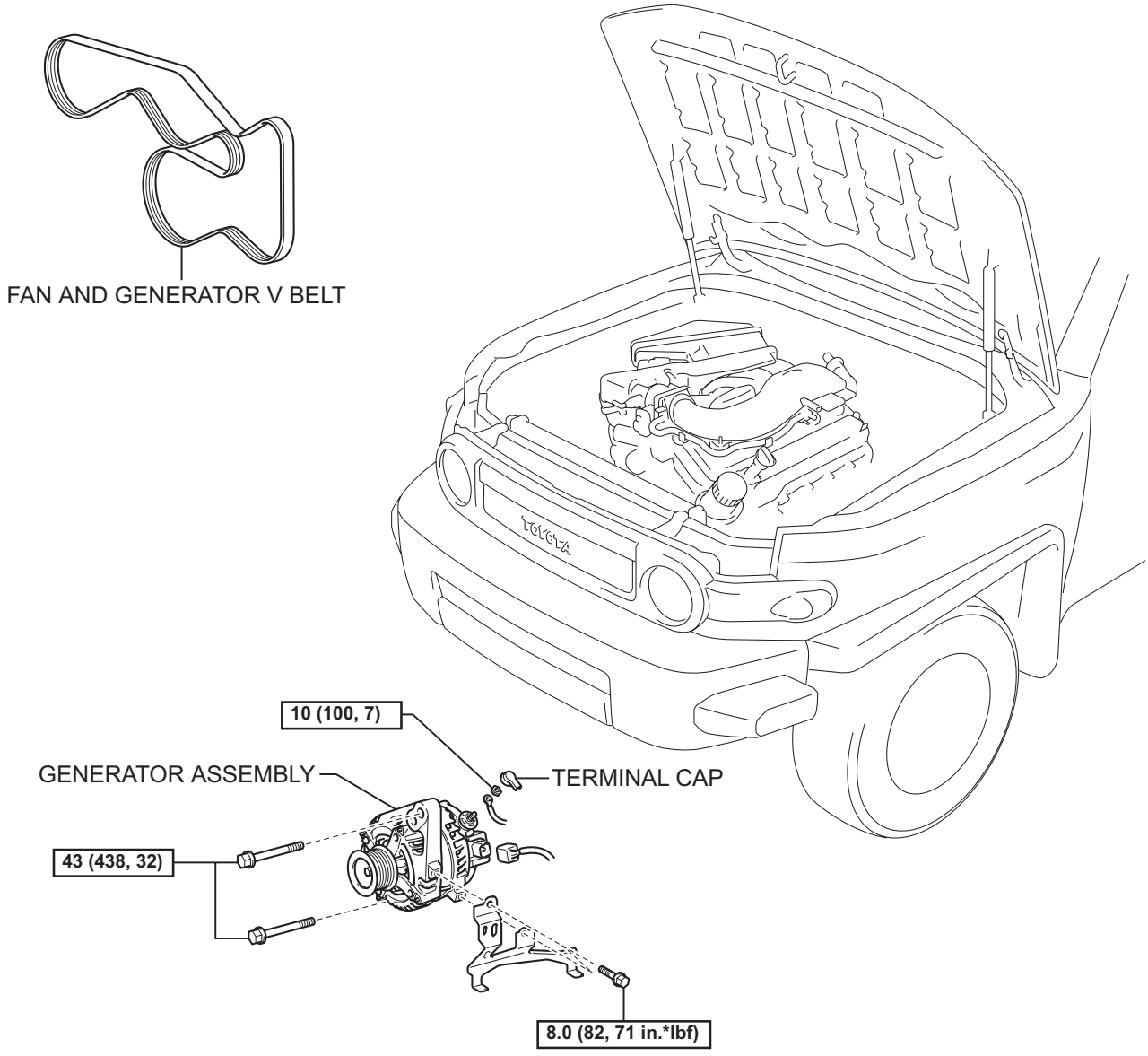

N*m (kgf*cm, ft*lbf) : Specified torque

Y

A137211E01

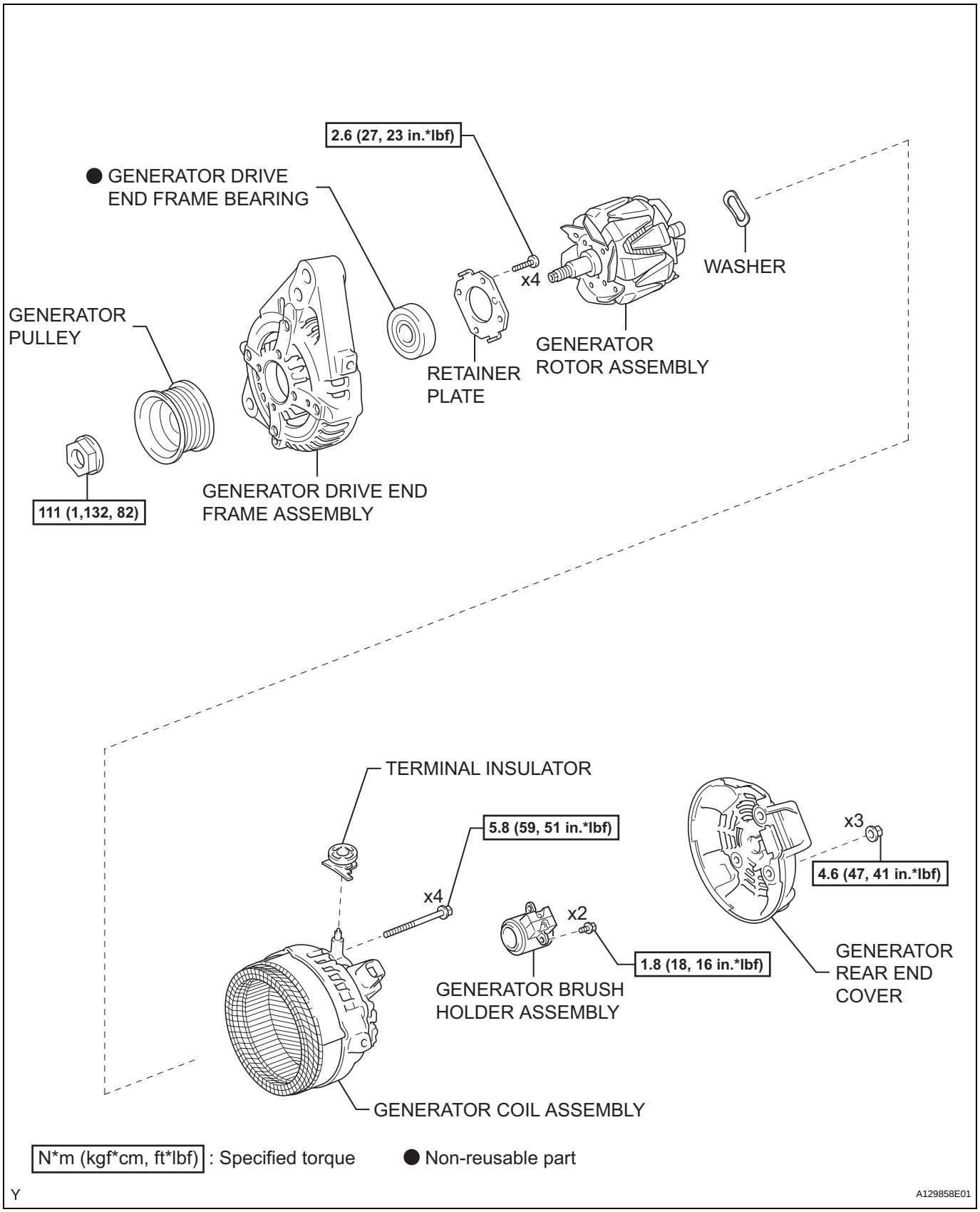
2.6 (27, 23 in.*lbf)
● GENERATOR DRIVE END FRAME BEARING
x4
WASHER
GENERATOR PULLEY
RETAINER PLATE
GENERATOR ROTOR ASSEMBLY
111 (1,132, 82)
GENERATOR DRIVE END FRAME ASSEMBLY
TERMINAL INSULATOR
5.8 (59, 51 in.*lbf)
x4
x3
4.6 (47, 41 in.*lbf)
x2
1.8 (18, 16 in.*lbf)
GENERATOR BRUSH HOLDER ASSEMBLY
GENERATOR REAR END COVER
GENERATOR COIL ASSEMBLY
N*m (kgf*cm, ft*lbf) : Specified torque
● Non-reusable part
Y
A129858E01

CH

REMOVAL

1. **REMOVE BATTERY**
2. **REMOVE V-BANK COVER (See page ES-428)**
3. **REMOVE NO. 1 ENGINE UNDER COVER SUB-ASSEMBLY (See page EM-6)**
4. **REMOVE FAN AND GENERATOR V BELT (See page EM-6)**
5. **REMOVE GENERATOR ASSEMBLY**

(a) Disconnect the wire harness.

(1) Remove the bolt and wire harness stay.

(2) Disconnect the connector from the generator assembly.

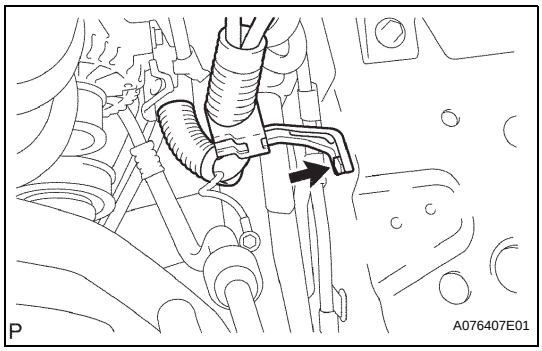

(3) Remove the terminal cap and nut.

(4) Disconnect the wire harness from terminal B.

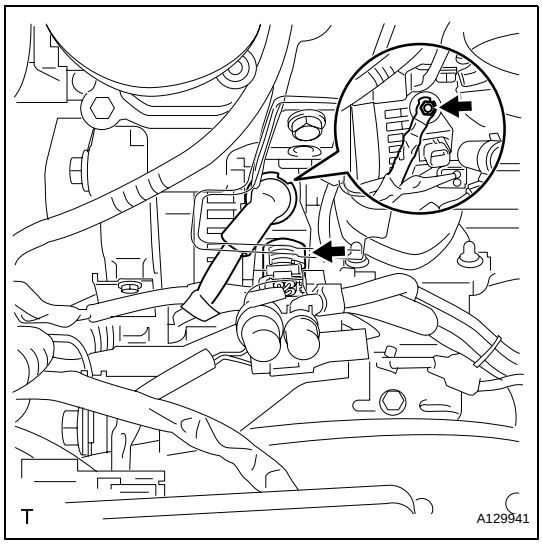

(b) Remove the 2 bolts, then separate the wire harness clamp bracket from the generator assembly.

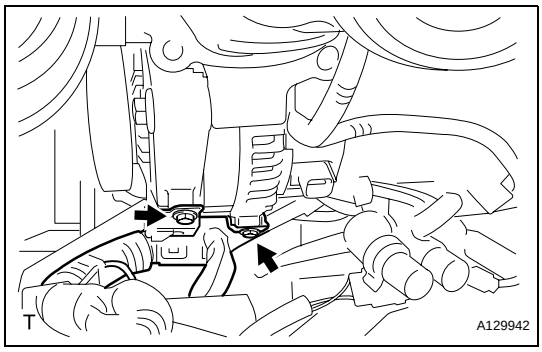

CH

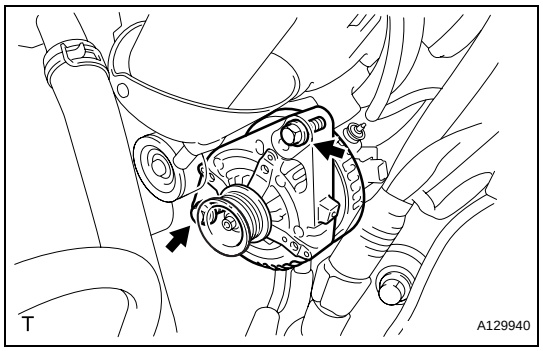

(c) Remove the 2 bolts, then remove the generator assembly.

DISASSEMBLY

1. REMOVE GENERATOR PULLEY
SST 09820-63010 (09820-06010, 09820-06020)
HINT

SST 1-A and B	09820 - 06010
SST 2	09820 - 06020

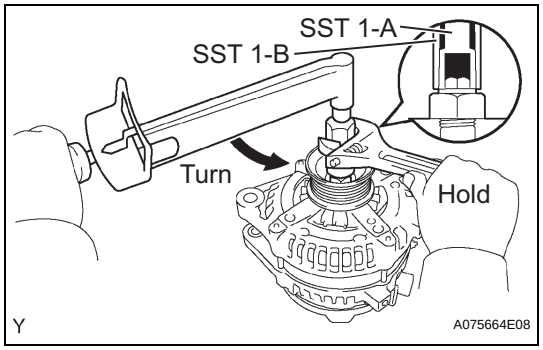

(a) Hold SST 1-A with a torque wrench, and tighten SST 1-B clockwise with the specified torque.
Torque: 39 N*m (400 kgf*cm, 29 ft.*lbf)
NOTICE:
Check that SST is secured to the rotor shaft.

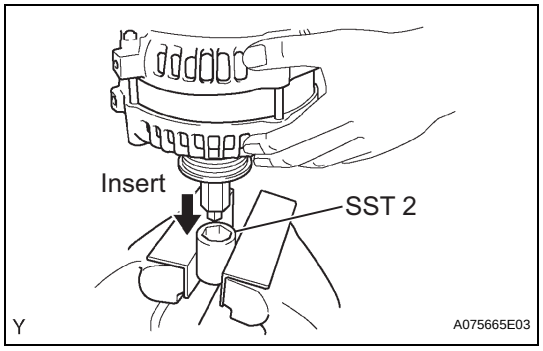

(b) Mount SST 2 in a vise.
(c) Insert SST 1-A and B into SST 2, and attach the pulley nut to SST 2.

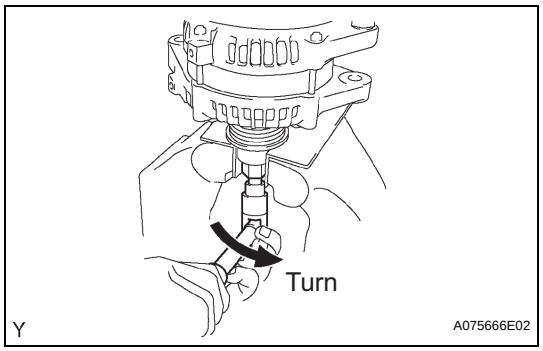

(d) To loosen the pulley nut, turn SST 1-A in the direction shown in the illustration.
NOTICE:
To prevent damage to the rotor shaft, do not loosen the pulley nut more than one-half turn.
(e) Remove the generator from SST 2.

CH

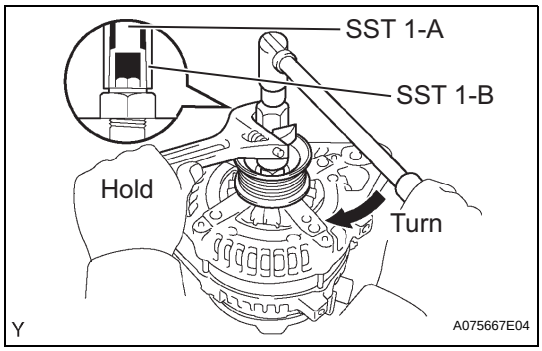

(f) Turn SST 1-B, and remove SST 1-A and B.
(g) Remove the pulley nut and pulley.

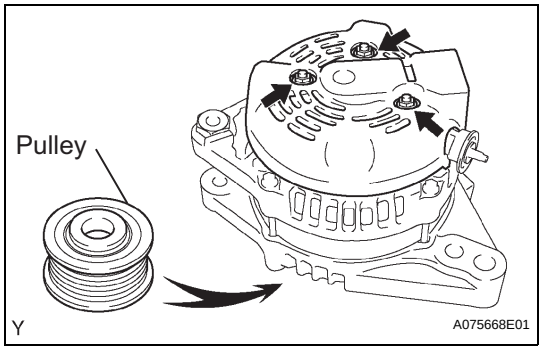

2. REMOVE GENERATOR REAR END COVER

(a) Place the generator on the pulley.
(b) Remove the 3 nuts and the rear end cover.

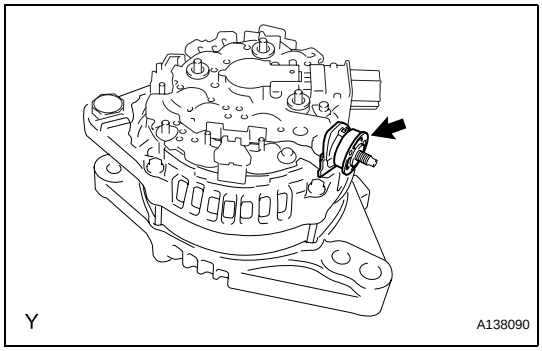

3. REMOVE TERMINAL INSULATOR

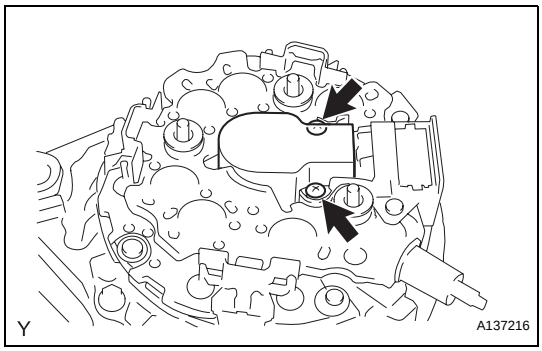

4. REMOVE GENERATOR BRUSH HOLDER ASSEMBLY

(a) Remove the 2 screws and the brush holder.

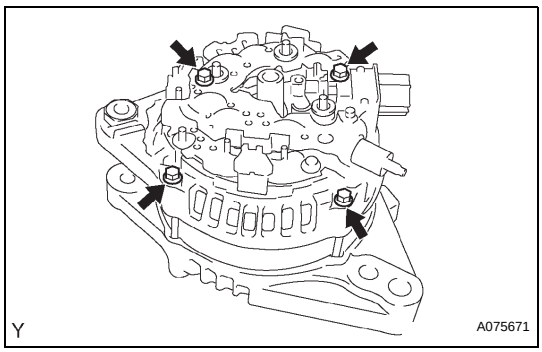

5. REMOVE GENERATOR COIL ASSEMBLY

(a) Remove the 4 bolts.

CH

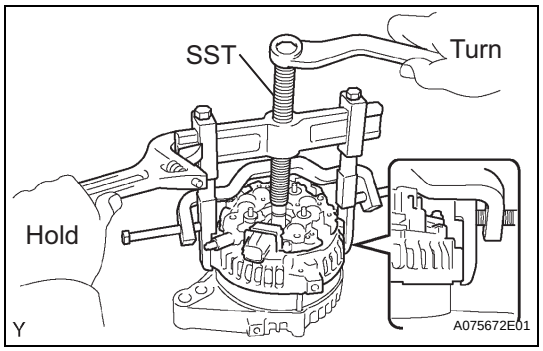

(b) Using SST, remove the coil.
SST 09950-40011 (09951-04020, 09952-04010, 09953-04020, 09954-04010, 09955-04071, 09957-04010, 09958-04011)

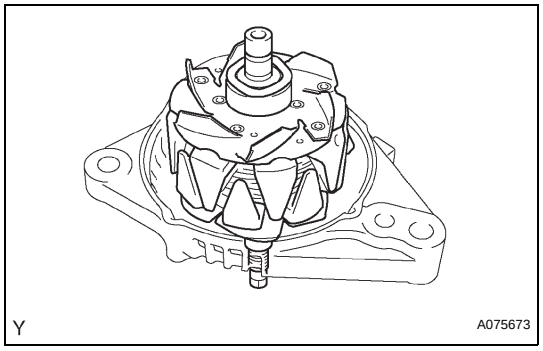

6. REMOVE GENERATOR ROTOR ASSEMBLY
(a) Remove the washer and rotor.

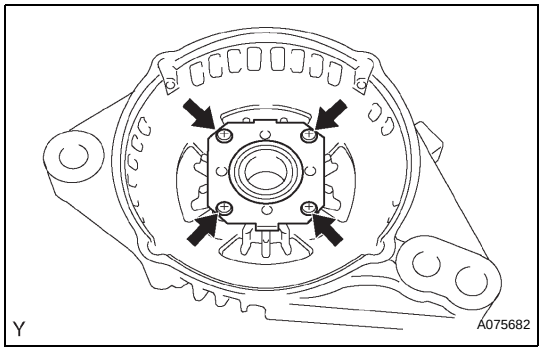

7. REMOVE GENERATOR DRIVE END FRAME BEARING
(a) Remove the 4 screws and the retainer plate.

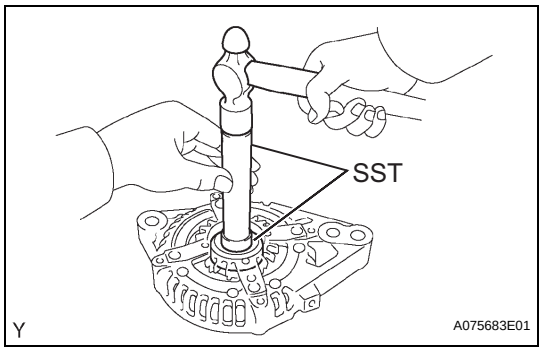

(b) Using SST, tap out the bearing.
SST 09950-60010 (09951-00250), 09950-70010 (09951-07100)

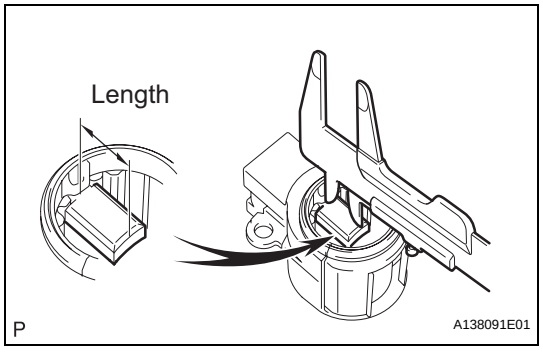

INSPECTION

1. INSPECT GENERATOR BRUSH HOLDER ASSEMBLY
(a) Using vernier calipers, measure the exposed brush length.
Standard exposed brush length:
10.5 mm (0.413 in.)
Minimum exposed brush length:
4.5 mm (0.177 in.)
If the exposed brush length is less than the minimum, replace the brush holder.

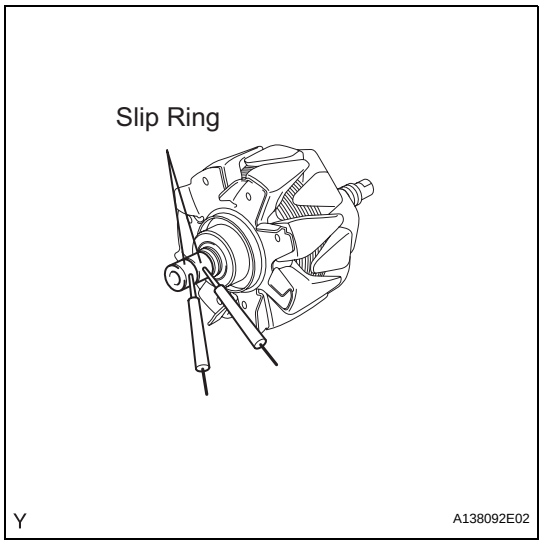

2. INSPECT GENERATOR ROTOR ASSEMBLY

(a) Check the rotor for an open circuit.

(1) Using an ohmmeter, measure the resistance between the slip rings.

Standard resistance:

2.3 to 2.7 Ω at 20°C (68°F)

If the resistance is not as specified, replace the rotor.

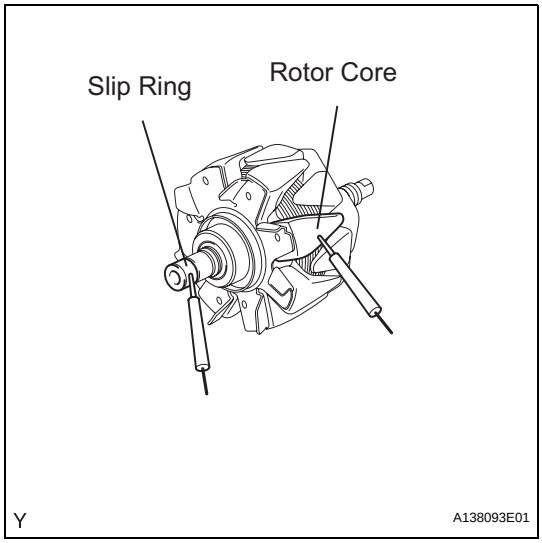

(b) Check the rotor for ground.

(1) Using an ohmmeter, check the resistance between the slip ring and rotor.

Standard resistance:

10 kΩ or higher

If there is continuity, replace the rotor.

(c) Inspect the slip rings.

(1) Check that the slip rings are not rough or scored.

If rough or scored, replace the rotor assembly.

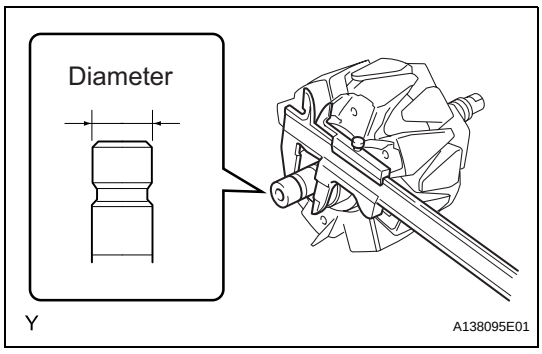

(2) Using vernier calipers, measure the slip ring diameter.

Standard diameter:

14.2 to 14.4 mm (0.559 to 0.567 in.)

Minimum diameter:

14.0 mm (0.551 in.)

If the diameter is less than the minimum, replace the rotor.

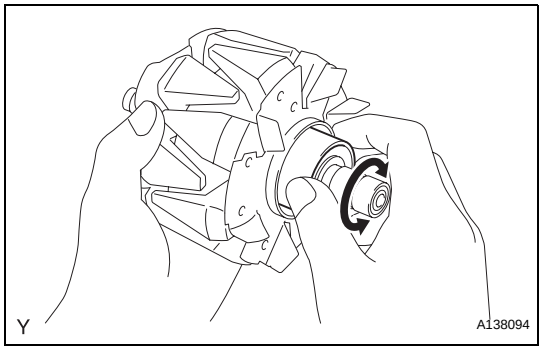

3. INSPECT GENERATOR ROTOR BEARING

(a) Check that the bearing is not rough or worn.

If necessary, replace the generator rotor assembly.

CH

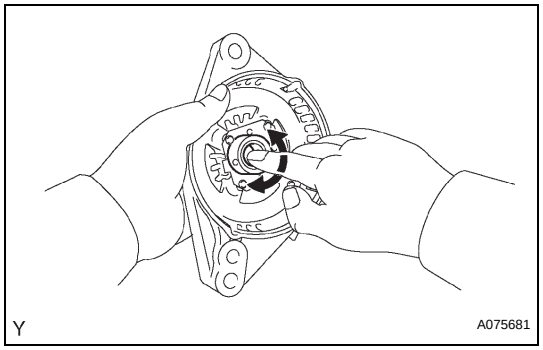

4. INSPECT GENERATOR DRIVE END FRAME BEARING

(a) Check that the bearing is not rough or worn.
If necessary, replace the bearing.

REASSEMBLY

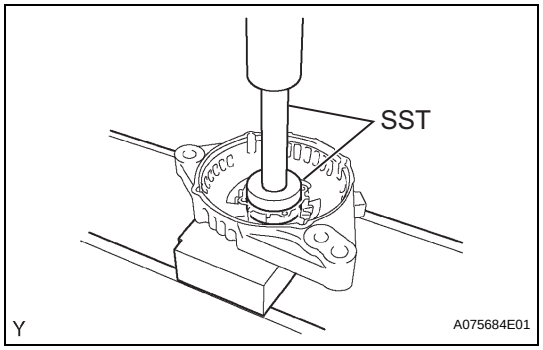

1. INSTALL GENERATOR DRIVE END FRAME BEARING

(a) Using SST and a press, press in a new bearing.
SST 09950-60010 (09951-00470), 09950-70010 (09951-07100)

(b) Install the retainer plate with the 4 screws.
Torque: 2.6 N*m (27 kgf*cm, 23 in.*lbf)

2. INSTALL GENERATOR ROTOR ASSEMBLY

(a) Place the drive end frame on the rotor.

(b) Install the rotor and washer.

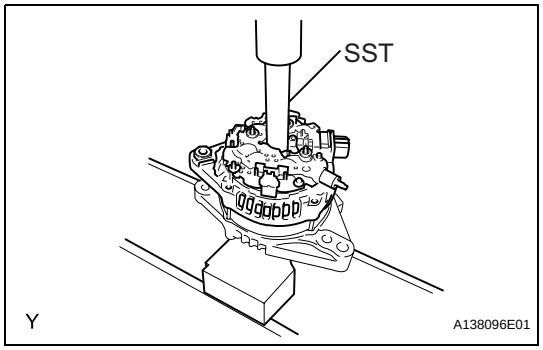

3. INSTALL GENERATOR COIL ASSEMBLY

(a) Using SST and a press, press in the coil carefully.
SST 09285-76010

(b) Install the 4 bolts.
Torque: 5.8 N*m (59 kgf*cm, 51 in.*lbf)

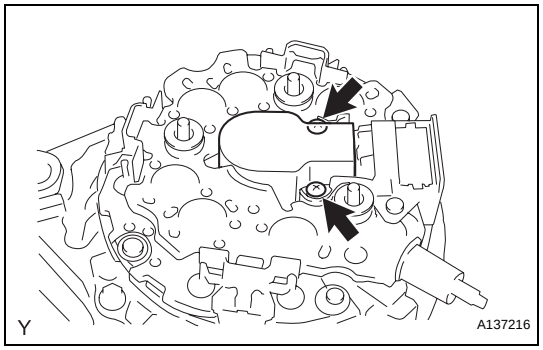

4. INSTALL GENERATOR BRUSH HOLDER ASSEMBLY

(a) Install the 2 screws.
Torque: 1.8 N*m (18 kgf*cm, 16 in.*lbf)

5. INSTALL TERMINAL INSULATOR

6. INSTALL GENERATOR REAR END COVER

(a) Install the rear end cover with the 3 nuts.
Torque: 4.6 N*m (47 kgf*cm, 41 in.*lbf)

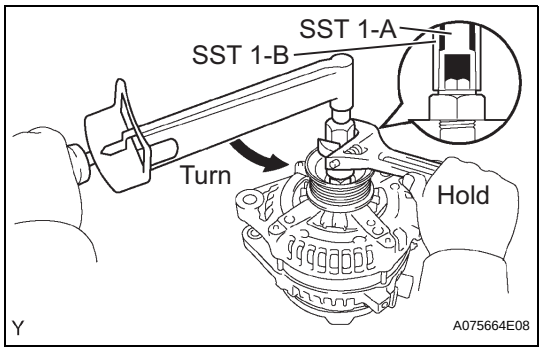

7. INSTALL GENERATOR PULLEY
SST 09820-63010 (09820-06010, 09820-06020)
HINT

SST 1-A and B	09820 - 06010
SST 2	09820 - 06020

(a) Install the pulley onto the rotor shaft by tightening the pulley nut by hand.
(b) Hold SST 1-A with a torque wrench, and tighten SST 1-B clockwise with the specified torque.
Torque: 39 N*m (400 kgf*cm, 29 ft.*lbf)
NOTICE:
Check that SST is secured to the rotor shaft.

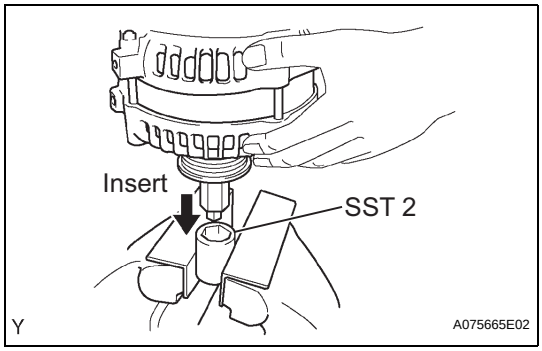

(c) Mount SST 2 in a vice.
(d) Insert SST 1-A and B into SST 2, and attach the pulley nut to SST 2.

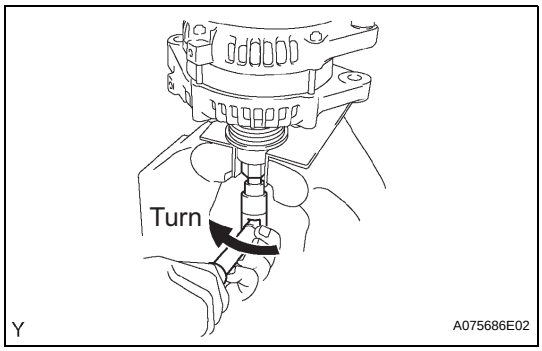

(e) Tighten the pulley nut by turning SST 1-A in the direction shown in the illustration.
Torque: 111 N*m (1,132 kgf*cm, 82 ft.*lbf)
(f) Remove the generator from SST 2.

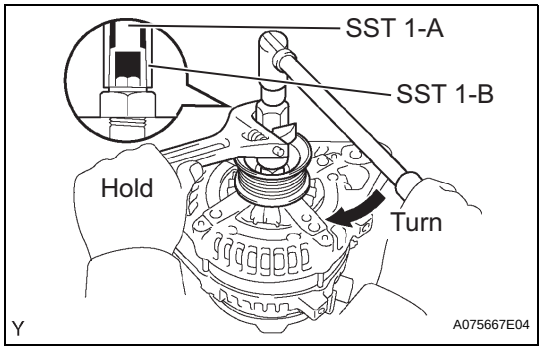

(g) Turn SST 1-B, and remove SST 1-A and B.
(h) Turn the pulley, and check that the pulley moves smoothly.

CH

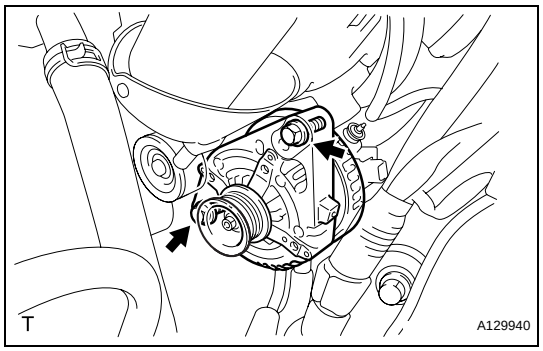

INSTALLATION

1. INSTALL GENERATOR ASSEMBLY

(a) Install the generator assembly with the 2 bolts.
Torque: 43 N*m (438 kgf*cm, 32 ft.*lbf)

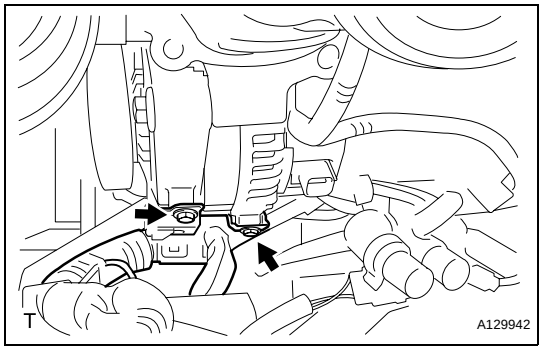

(b) Install the wire harness clamp bracket with the 2 bolts.
Torque: 8.0 N*m (82 kgf*cm, 71 in.*lbf)

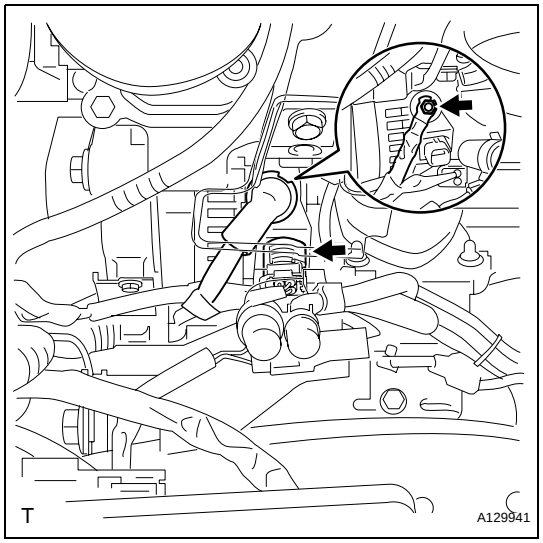

(c) Connect the wire harness.
(1) Connect the wire harness to terminal B and install the nut.
Torque: 10 N*m (100 kgf*cm, 7 ft.*lbf)
(2) Connect the connector to the generator assembly.

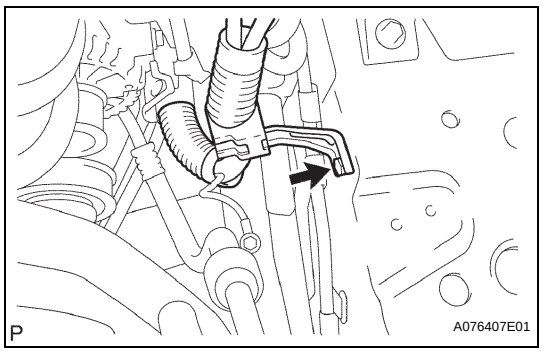

(3) Install the wire harness stay with the bolt.
Torque: 5.8 N*m (59 kgf*cm, 51 in.*lbf)

2. INSTALL FAN AND GENERATOR V BELT (See page EM-6)

3. INSTALL NO. 1 UNDER COVER SUB-ASSEMBLY (See page EM-7)

4. INSTALL V-BANK COVER (See page ES-431)

5. INSTALL BATTERY
Torque: 3.9 N*m (40 kgf*cm, 35 in.*lbf)

CH

CLUTCH SYSTEM

PROBLEM SYMPTOMS TABLE

Use the table below to help you find the cause of the problem. The numbers indicate the ranked order of probability of each of the possible causes. Check each part in the order suggested. If necessary, replace these parts.

Symptom	Suspected area	See page
Clutch grabs/chatters	1. Engine mounting (Loose)	-
	2. Clutch disc (Excessive runout)	CL-22
	3. Clutch disc (Oily)	CL-22
	4. Clutch disc (Worn out)	CL-22
	5. Clutch disc torsion rubber (Damaged)	CL-22
	6. Clutch disc (Glazed)	CL-22
	7. Diaphragm spring (Tip out of alignment)	CL-22
Clutch pedal spongy	1. Clutch line (Air in line)	-
	2. Release cylinder rubber (Damaged)	CL-16
Clutch noisy	1. Release bearing (Worn, dirty or damaged)	CL-22
	2. Clutch disc torsion rubber (Damaged)	CL-22
Clutch slips	1. Clutch pedal (Free play out of adjustment)	CL-3
	2. Clutch disc (Oily)	CL-22
	3. Clutch disc (Worn out)	CL-22
	4. Diaphragm spring (Damaged)	CL-22
	5. Flywheel (Distorted)	CL-22
Clutch does not disengage	1. Clutch pedal (Free play out of adjustment)	CL-3
	2. Clutch line (Air in line)	-
	3. Release cylinder cup (Damaged)	CL-16
	4. Clutch disc (Out of line)	CL-22
	5. Clutch disc (Runout excessive)	CL-22
	6. Clutch disc (Lining broken)	CL-22
	7. Clutch disc (Dirty or burned)	CL-22
	8. Clutch disc (Oily)	CL-22
	9. Clutch disc (Lack of spline grease)	CL-22

CLUTCH PEDAL

COMPONENTS

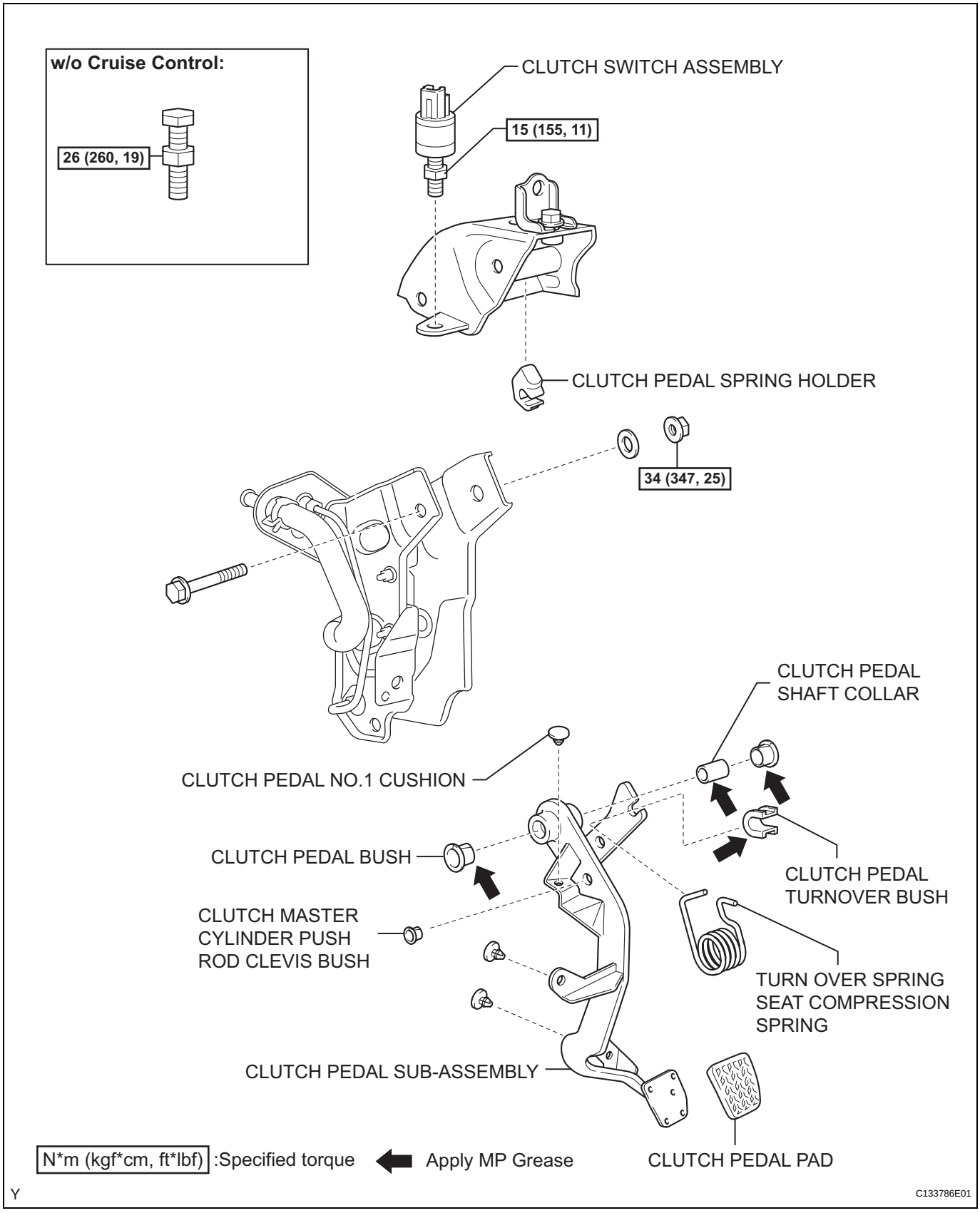

ON-VEHICLE INSPECTION

1. INSPECT AND ADJUST CLUTCH PEDAL SUB-ASSEMBLY

(a) Pull back the floor carpet.

(b) Check that the pedal height is correct.
Pedal height from asphalt sheet:
183.5 to 193.5 mm (7.224 to 7.618 in.)

(c) Adjust the pedal height. (w/ Cruise Control)
(1) Loosen the lock nut and turn the clutch switch until the height is correct. Tighten the lock nut.
Torque: 15 N*m (153 kgf*cm, 11 ft.*lbf)

(d) Adjust the pedal height. (w/o Cruise Control)
(1) Loosen the lock nut and turn the stopper bolt until the height is correct. Tighten the lock nut.
Torque: 26 N*m (260 kgf*cm, 19 ft.*lbf)

(e) Check that the pedal free play and push rod play are correct.
(1) Depress the pedal until the clutch resistance begins to be felt.
Pedal free play:
5.0 to 15.0 mm (0.197 to 0.591 in.)
(2) Gently depress the pedal until the resistance begins to increase a little.
Push rod play at pedal top:
1.0 to 5.0 mm (0.039 to 0.197 in.)

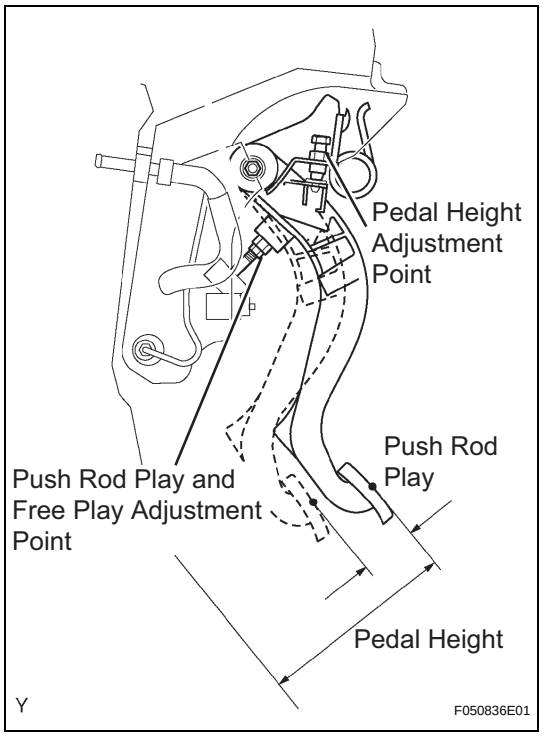

(f) Adjust the pedal free play and push rod play.
(1) Loosen the lock nut and turn the push rod until the free play and push rod play are correct.
(2) Tighten the lock nut.
(3) After adjusting the pedal free play, check the pedal height.
(4) Connect the air duct and install the lower finish panel.

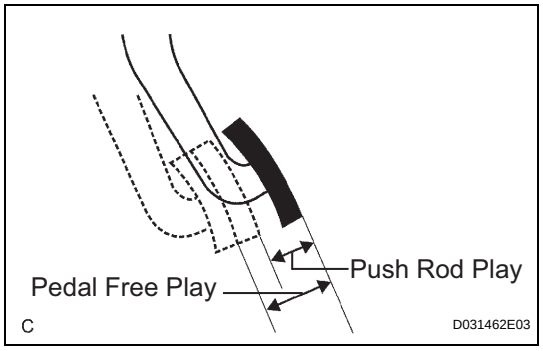

(g) Check the clutch release point.
(1) Pull the parking brake lever and chock the wheels.
(2) Start the engine and allow it to idle.
(3) Without depressing the clutch pedal, slowly move the shift lever into the reverse position until the gears engage.
(4) Gradually depress the clutch pedal and measure the stroke distance from the point that the gear noise stops (release point) up to the full stroke end position.
Standard distance:
25 mm (0.984 in.) or more
(From pedal stroke end position to release point)
If the distance is not as specified, perform the following operations.

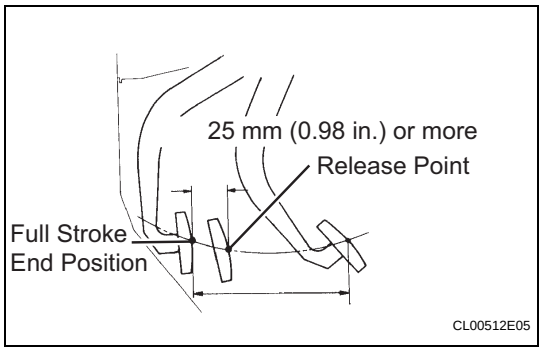

CL

- Check the pedal height.
- Check the push rod play and pedal free play.
- Bleed the clutch line.
- Check the clutch cover assembly and disc assembly.

REMOVAL

1. REMOVE CLUTCH MASTER CYLINDER ASSEMBLY
(See page CL-10)

2. REMOVE TURN OVER SPRING SEAT COMPRESSION SPRING

(a) Remove the compression spring.

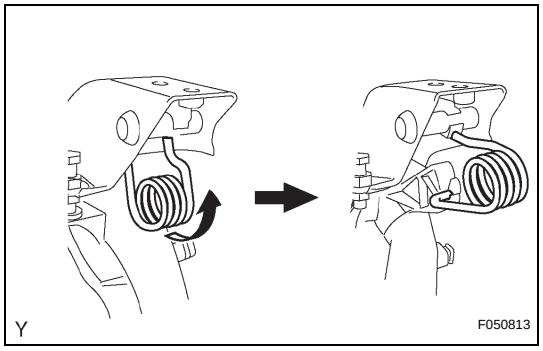

3. REMOVE CLUTCH PEDAL SUB-ASSEMBLY

(a) Remove the bolt and nut.

(b) Remove the clutch pedal from the clutch pedal support.

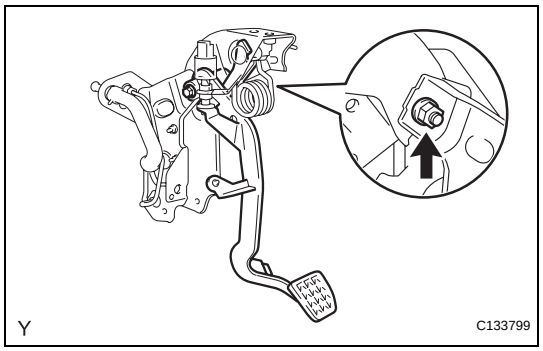

4. REMOVE CLUTCH PEDAL SPRING HOLDER

(a) Remove the clutch pedal spring holder from the clutch pedal support.

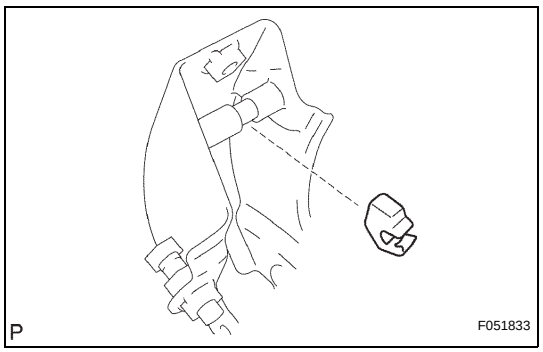

5. REMOVE CLUTCH SWITCH ASSEMBLY (w/ Cruise Control)

(a) Loosen the lock nut and remove the clutch switch.

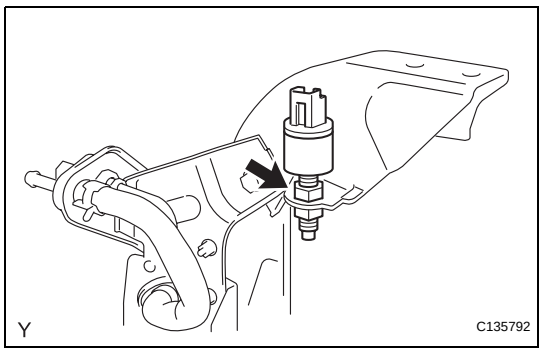

CL

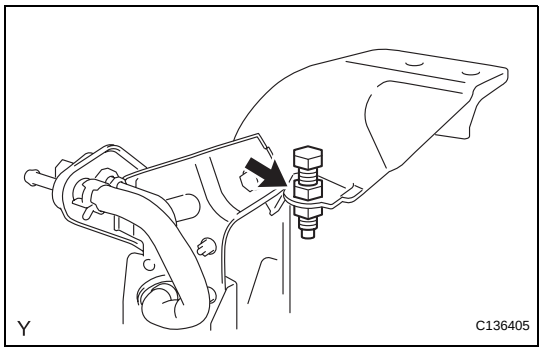

6. REMOVE CLUTCH PEDAL STOPPER BOLT (w/o Cruise Control)

(a) Loosen the lock nut and remove the clutch pedal stopper bolt.

7. REMOVE CLUTCH PEDAL PAD

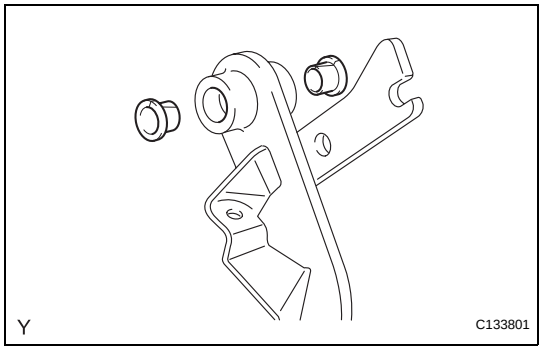

8. REMOVE CLUTCH PEDAL BUSH

(a) Remove the 2 bushes from the clutch pedal.

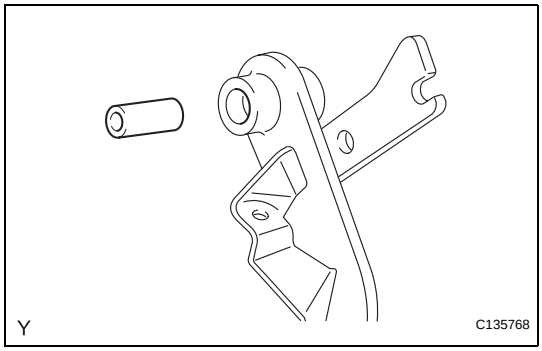

9. REMOVE CLUTCH PEDAL SHAFT COLLAR

(a) Remove the clutch pedal shaft collar.

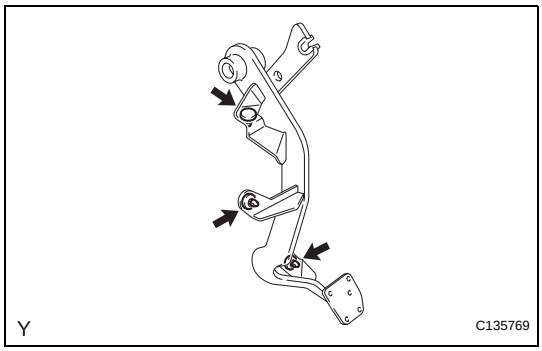

10. REMOVE CLUTCH PEDAL NO.1 CUSHION

(a) Using needle-nose pliers, remove the 3 No. 1 cushions from the clutch pedal.

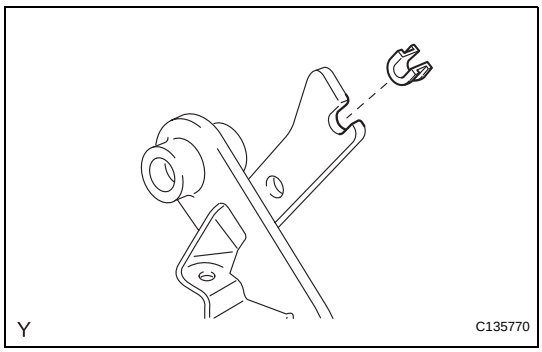

11. REMOVE CLUTCH PEDAL TURNOVER BUSH

(a) Remove the clutch pedal turnover bush from the clutch pedal.

CL

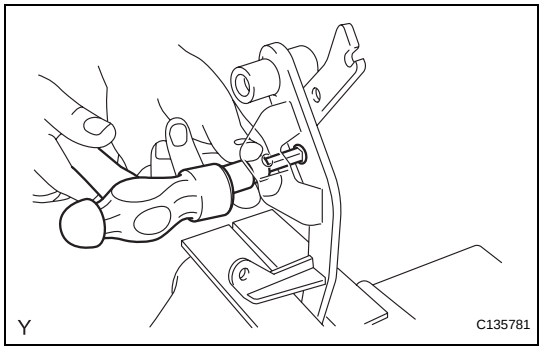

12. REMOVE CLUTCH MASTER CYLINDER PUSH ROD CLEVIS BUSH

(a) Using an 8 mm hexagon wrench and a hammer, remove the clevis bush.

INSTALLATION

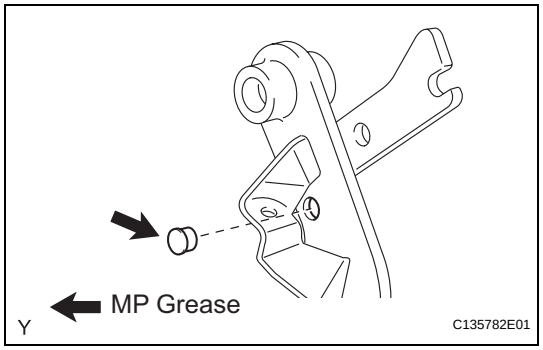

1. INSTALL CLUTCH MASTER CYLINDER PUSH ROD CLEVIS BUSH

(a) Apply MP grease to the inside of a new clevis bush.

(b) Install the clevis bush onto the clutch pedal.
HINT:
Install the clevis bush from the left side of the vehicle.

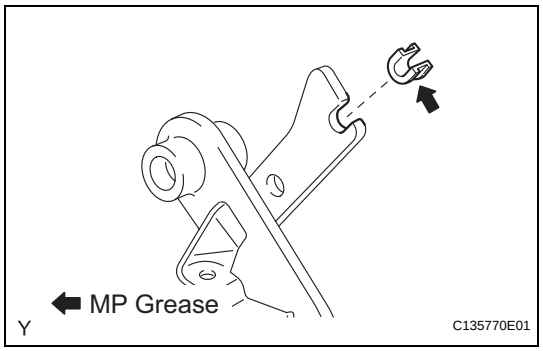

2. INSTALL CLUTCH PEDAL TURNOVER BUSH

(a) Apply MP grease to the clutch pedal turnover bush.

(b) Install the clutch pedal turnover bush onto the clutch pedal.

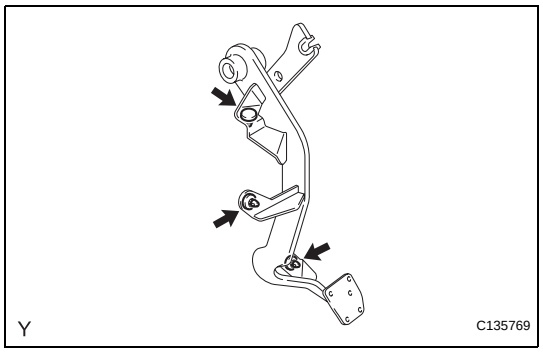

3. INSTALL CLUTCH PEDAL NO.1 CUSHION

(a) Install the 3 No. 1 cushions onto the clutch pedal.

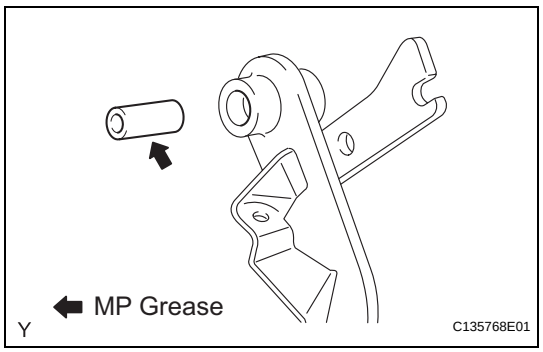

4. INSTALL CLUTCH PEDAL SHAFT COLLAR

(a) Apply MP grease to the clutch pedal shaft collar.

(b) Install the clutch pedal shaft collar onto the clutch pedal.

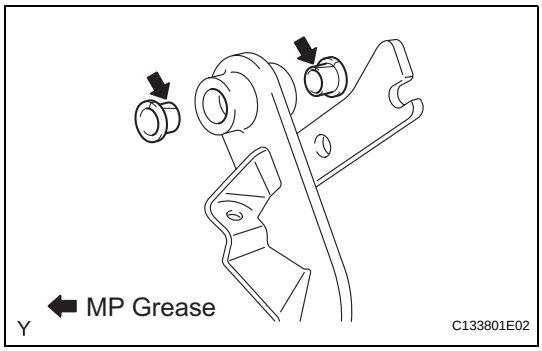

5. INSTALL CLUTCH PEDAL BUSH

(a) Apply MP grease to 2 new bushes.

(b) Install the 2 bushes onto the clutch pedal.

6. INSTALL CLUTCH PEDAL PAD

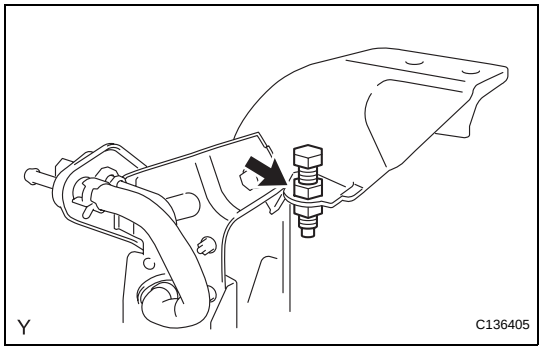

7. INSTALL CLUTCH PEDAL STOPPER BOLT (w/o Cruise Control)

(a) Install the clutch pedal stopper bolt and provisionally tighten the lock nut.

HINT:

Tighten the lock nut to the specified torque when adjusting the clutch pedal.

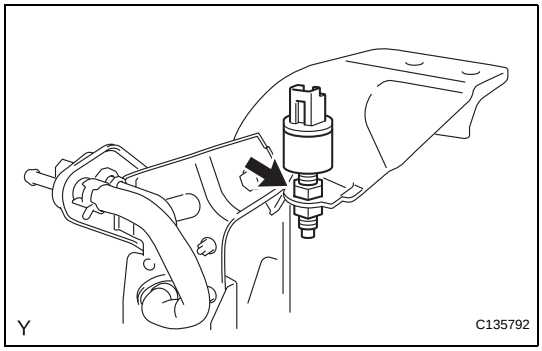

8. INSTALL CLUTCH SWITCH ASSEMBLY (w/ Cruise Control)

(a) Install the clutch switch and provisionally tighten the lock nut.

HINT:

Tighten the lock nut to the specified torque when adjusting the clutch pedal.

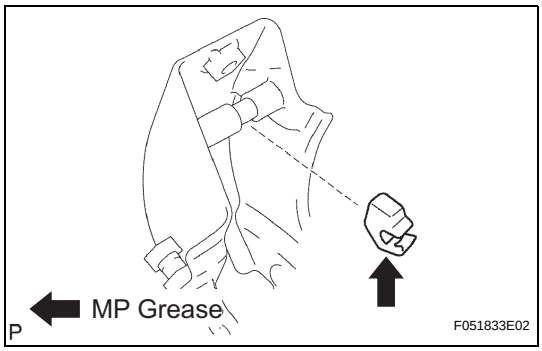

9. INSTALL CLUTCH PEDAL SPRING HOLDER

(a) Apply MP grease to the contact surface of the clutch pedal spring holder.

(b) Install the clutch pedal spring holder.

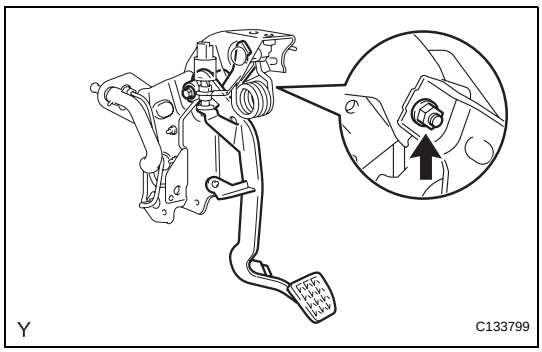

10. INSTALL CLUTCH PEDAL SUB-ASSEMBLY

(a) Install the clutch pedal onto the clutch pedal support with the bolt and nut.

Torque: 34 N*m (347 kgf*cm, 25 ft.*lbf)

HINT:

Install the bolt from the left side of the vehicle.

CL

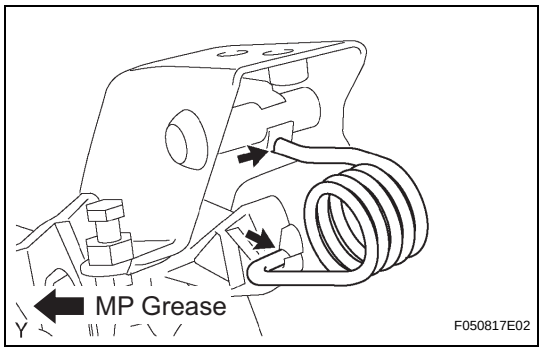

11. INSTALL TURN OVER SPRING SEAT COMPRESSION SPRING

(a) Apply MP grease to the contact surfaces of the spring holder, clutch pedal and spring.

(b) Install the spring onto the clutch pedal and spring holder.

12. INSTALL CLUTCH MASTER CYLINDER ASSEMBLY (See page CL-12)

13. BLEED CLUTCH PIPE LINE

14. INSPECT AND ADJUST CLUTCH PEDAL SUB-ASSEMBLY (See page CL-3)

15. CHECK FOR CLUTCH FLUID LEAKAGE

16. CHECK FLUID LEVEL IN RESERVOIR

CLUTCH MASTER CYLINDER

COMPONENTS

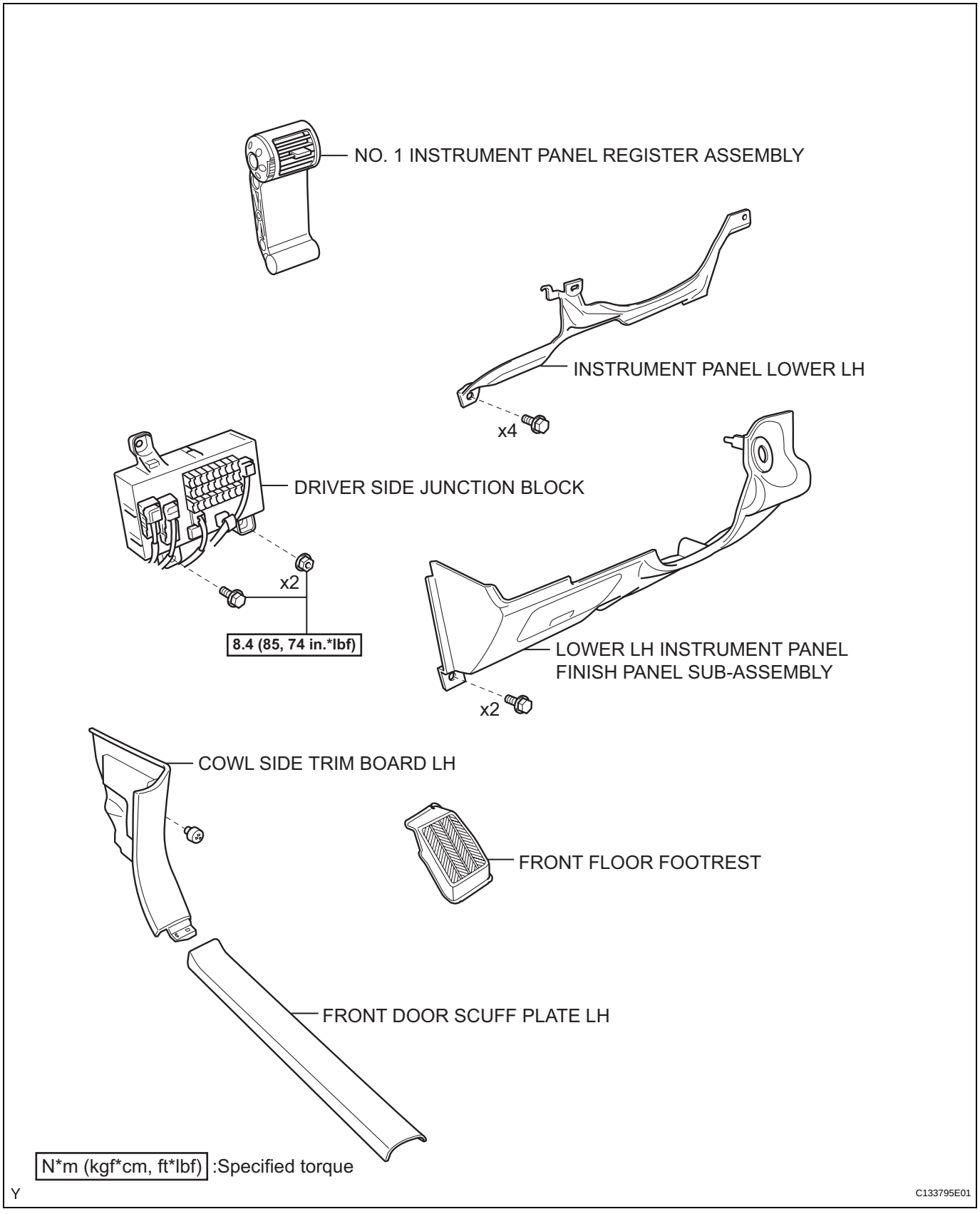

CL

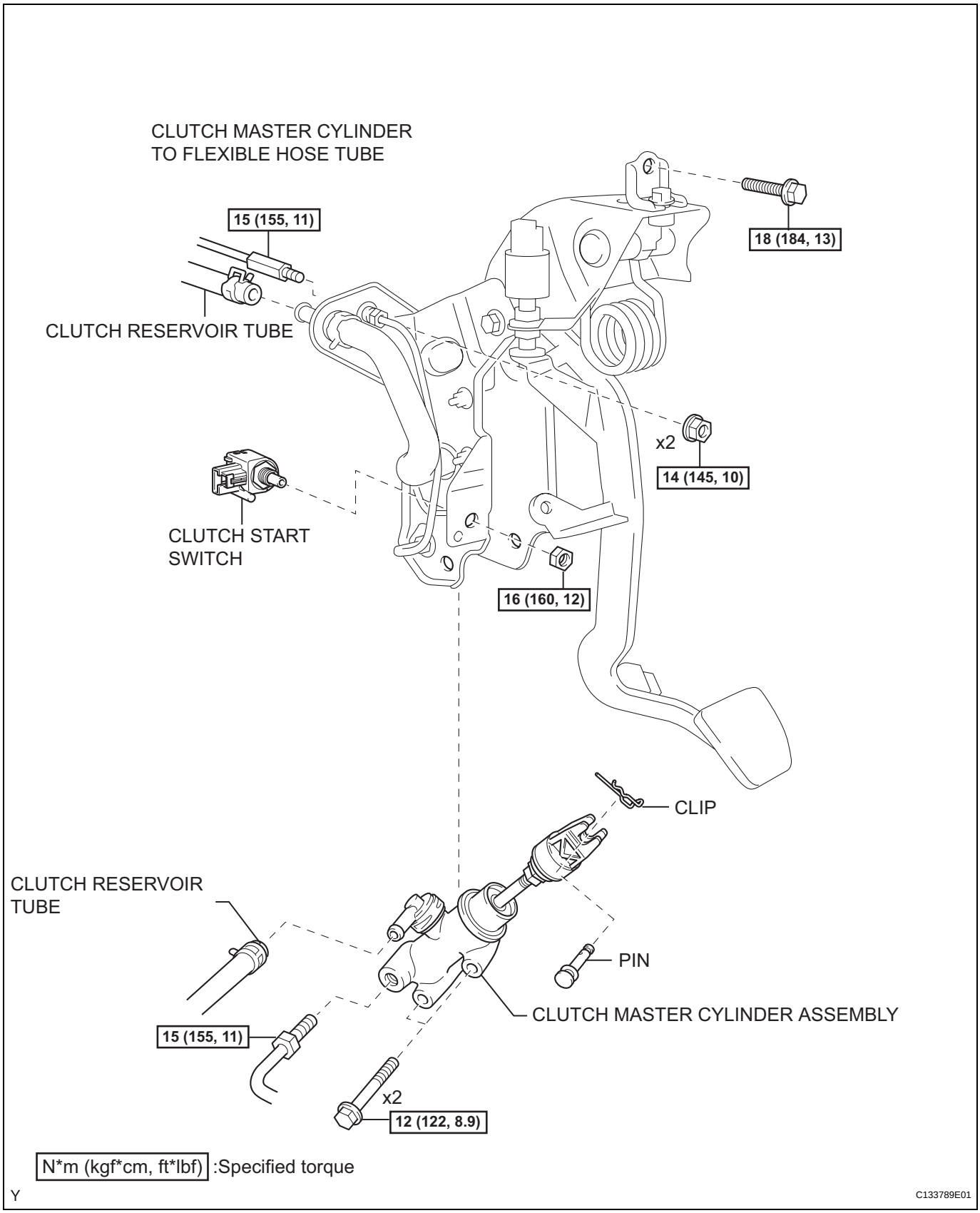
CLUTCH MASTER CYLINDER
TO FLEXIBLE HOSE TUBE
15 (155, 11)
CLUTCH RESERVOIR TUBE
18 (184, 13)
x2
14 (145, 10)
CLUTCH START
SWITCH
16 (160, 12)
CLIP
CLUTCH RESERVOIR
TUBE
PIN
CLUTCH MASTER CYLINDER ASSEMBLY
15 (155, 11)
x2
12 (122, 8.9)
N*m (kgf*cm, ft*lbf) :Specified torque
Y
C133789E01

CL

REMOVAL

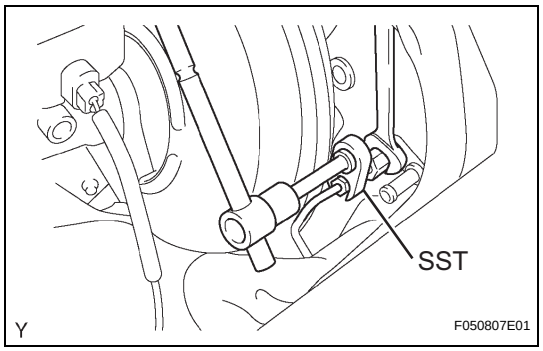

1. **DRAIN CLUTCH FLUID**
2. **DISCONNECT CLUTCH RESERVOIR TUBE**
3. **DISCONNECT CLUTCH MASTER CYLINDER TO FLEXIBLE HOSE TUBE**
   (a) Using SST, disconnect the flexible hose tube.
   SST 09023-00101
4. **REMOVE FRONT FLOOR FOOTREST (See page IR-2)**
5. **REMOVE FRONT DOOR SCUFF PLATE LH (See page IR-15)**
6. **REMOVE COWL SIDE TRIM BOARD LH (See page IR-15)**
7. **REMOVE NO. 1 INSTRUMENT PANEL REGISTER ASSEMBLY (See page IP-13)**
8. **REMOVE LOWER LH INSTRUMENT PANEL FINISH PANEL SUB-ASSEMBLY (See page IP-14)**
9. **REMOVE INSTRUMENT PANEL LOWER LH (See page IP-14)**
10. **SEPARATE DRIVER SIDE JUNCTION BLOCK (See page CC-40)**
11. **REMOVE CLUTCH PEDAL WITH CLUTCH MASTER CYLINDER**
    (a) Disconnect the clutch start switch connector.
    (b) Disconnect the clutch switch connector. (w/ Cruise Control)
    (c) Remove the 2 nuts and bolt, then remove the clutch pedal with clutch master cylinder.

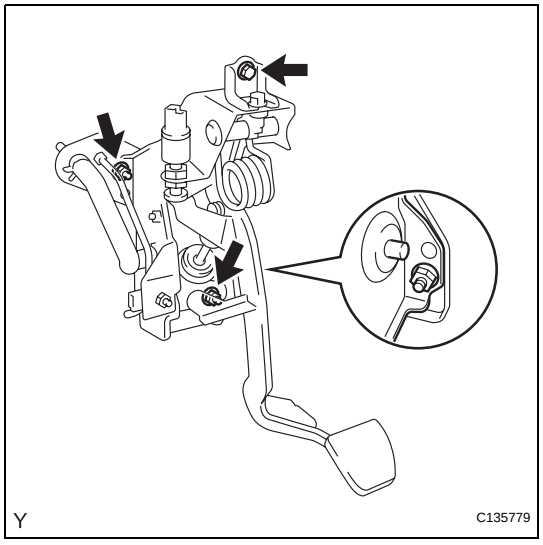

12. **REMOVE CLUTCH MASTER CYLINDER ASSEMBLY**
    (a) Disconnect the clutch reservoir tube.

CL

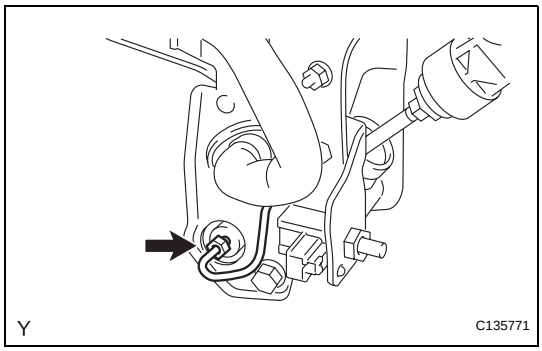

(b) Using SST, disconnect the 2 way tube from the clutch master cylinder.
SST 09023-00101

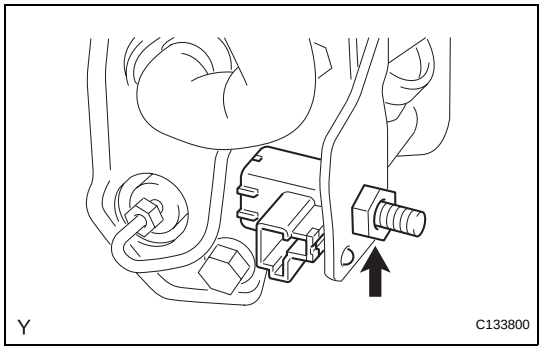

(c) Remove the nut and clutch start switch from the clutch pedal support.

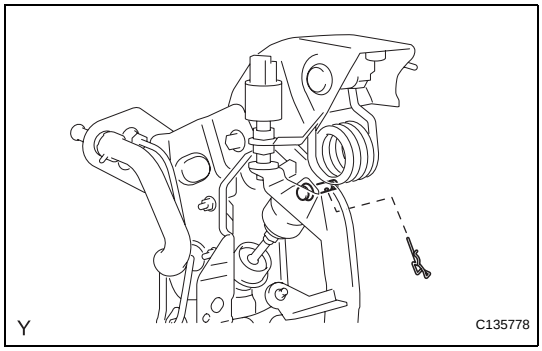

(d) Remove the clip and the pin and separate the push rod clevis from the clutch pedal.

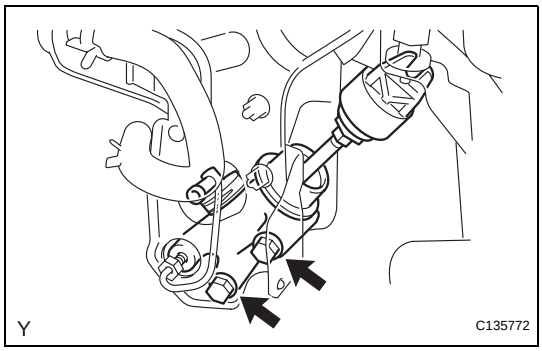

(e) Remove the 2 bolts, then remove the clutch master cylinder.

CL

INSTALLATION

1. INSTALL CLUTCH MASTER CYLINDER ASSEMBLY

(a) Install the clutch master cylinder with the 2 bolts.
Torque: 12 N*m (122 kgf*cm, 8.9 ft.*lbf)

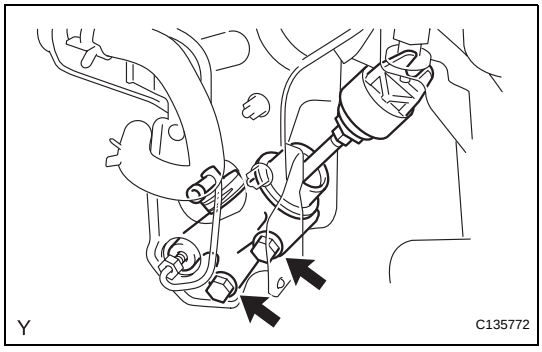

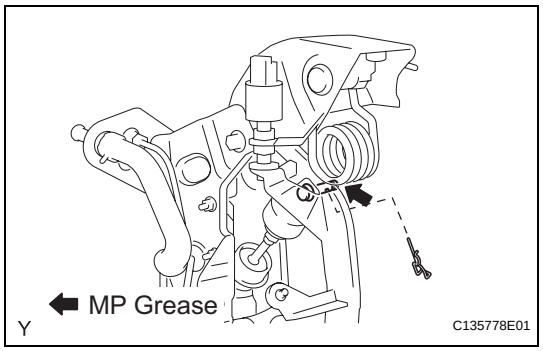

(b) Apply MP grease to the pin.
(c) Install the push rod clevis with the pin and clip.

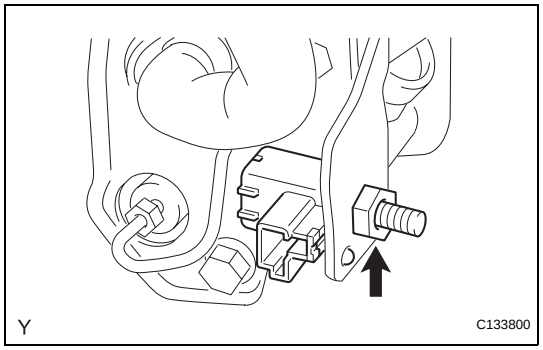

(d) Install the clutch start switch with the nut.
Torque: 16 N*m (160 kgf*cm, 12 ft.*lbf)

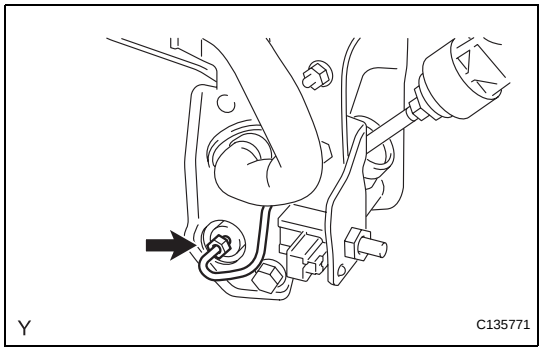

(e) Using SST, connect the clutch master cylinder to 2 way tube.
SST 09023-00101
Torque: 15 N*m (155 kgf*cm, 11 ft.*lbf)
(f) Connect the clutch reservoir tube.

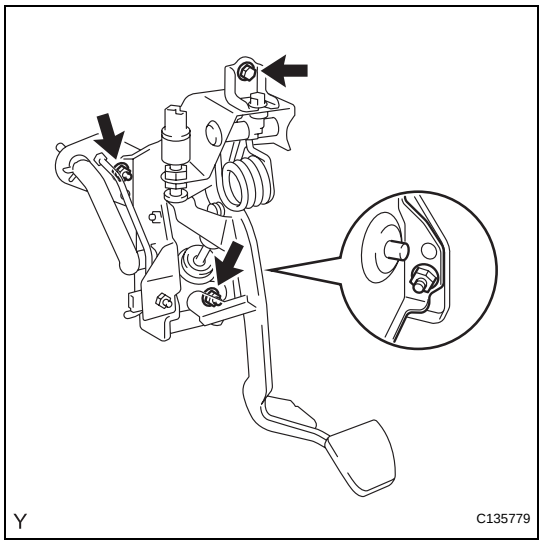

2. INSTALL CLUTCH PEDAL WITH CLUTCH MASTER CYLINDER
(a) Install the clutch pedal with clutch master cylinder onto the vehicle with the 2 nuts and bolt.
Torque: 14 N*m (145 kgf*cm, 10 ft.*lbf) for nut
18 N*m (184 kgf*cm, 13 ft.*lbf) for bolt
(b) Connect the clutch switch connector. (w/ Cruise Control)
(c) Connect the clutch start switch connector.

3. INSTALL DRIVER SIDE JUNCTION BLOCK (See page CC-41)

4. INSTALL INSTRUMENT PANEL LOWER LH (See page IP-29)

5. INSTALL LOWER LH INSTRUMENT PANEL FINISH PANEL SUB-ASSEMBLY (See page IP-29)

6. INSTALL NO. 1 INSTRUMENT PANEL REGISTER ASSEMBLY (See page IP-30)

7. INSTALL COWL SIDE TRIM BOARD LH (See page IR-45)

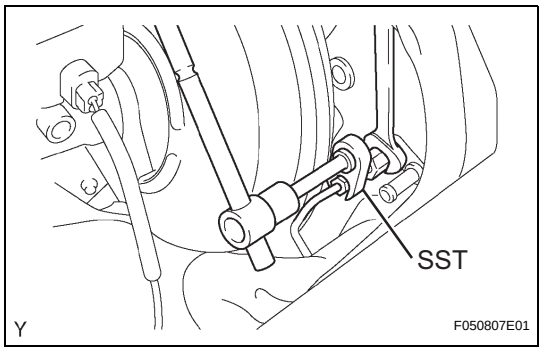

8. **INSTALL FRONT DOOR SCUFF PLATE LH (See page IR-45)**
9. **INSTALL FRONT FLOOR FOOTREST (See page IR-2)**
10. **CONNECT CLUTCH MASTER CYLINDER TO FLEXIBLE HOSE TUBE**
    (a) Using SST, connect the flexible hose tube.
    SST 09023-00101
    Torque: 15 N*m (155 kgf*cm, 11 ft.*lbf)
11. **CONNECT CLUTCH RESERVOIR TUBE**
12. **BLEED CLUTCH PIPE LINE**
13. **INSPECT AND ADJUST CLUTCH PEDAL SUB-ASSEMBLY (See page CL-3)**
14. **CHECK FOR CLUTCH FLUID LEAKAGE**
15. **CHECK FLUID LEVEL IN RESERVOIR**

CLUTCH RELEASE CYLINDER

COMPONENTS

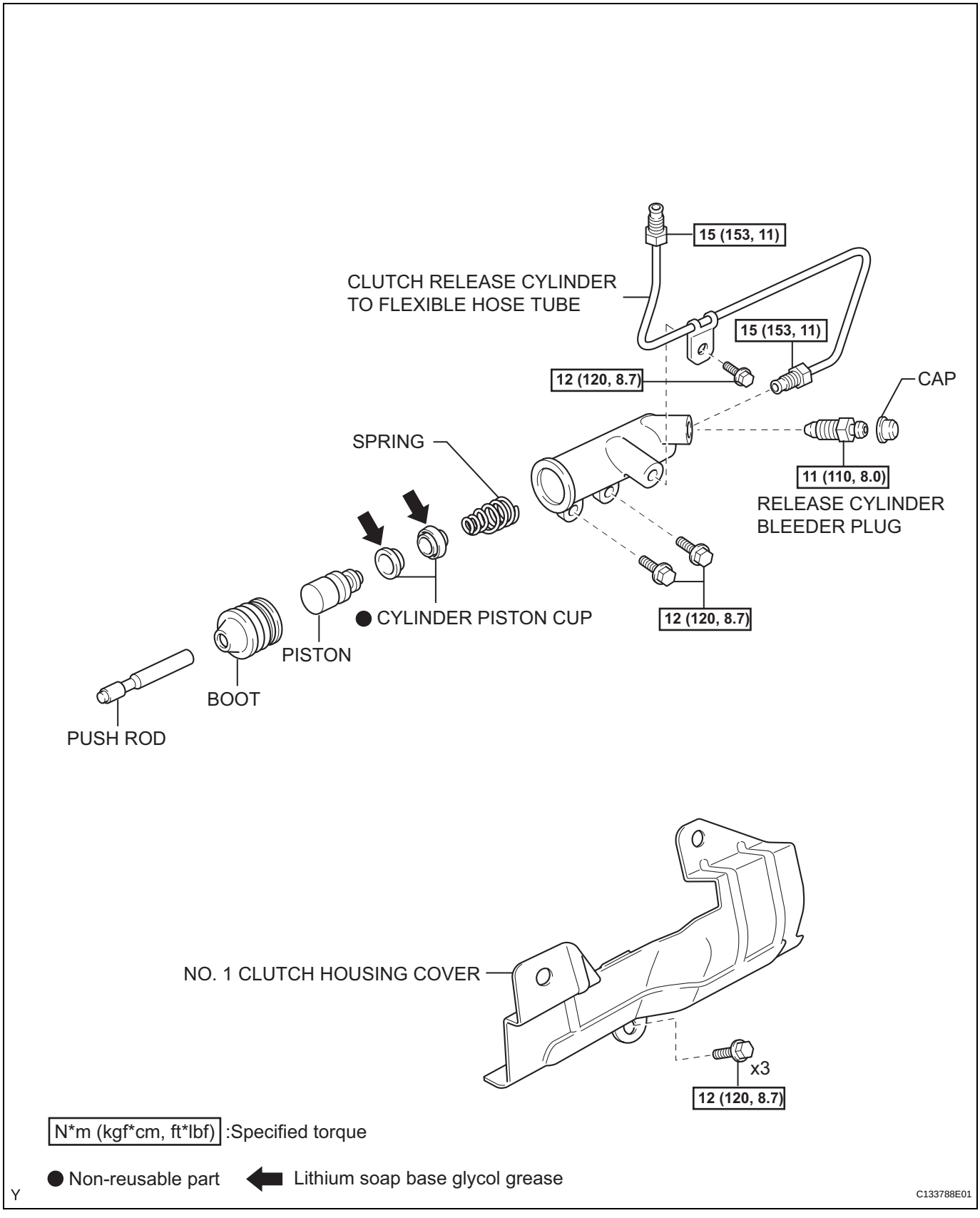

CL

REMOVAL

1. DRAIN CLUTCH FLUID

2. REMOVE NO. 1 CLUTCH HOUSING COVER

(a) Remove the 3 bolts and No. 1 clutch housing cover.

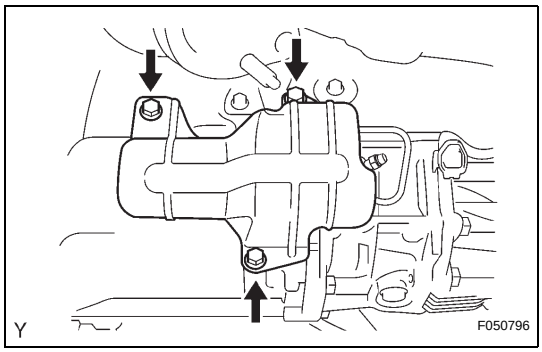

3. DISCONNECT CLUTCH RELEASE CYLINDER TO FLEXIBLE HOSE TUBE

(a) Using SST, disconnect the flexible hose tube.
SST 09023-00101

(b) Remove the bolt and clutch line bracket.
HINT:
Use a container to catch the fluid.

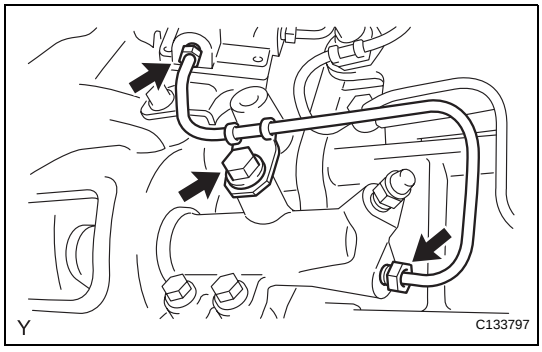

4. REMOVE CLUTCH RELEASE CYLINDER ASSEMBLY

(a) Remove the 2 bolts and pull out the clutch release cylinder.

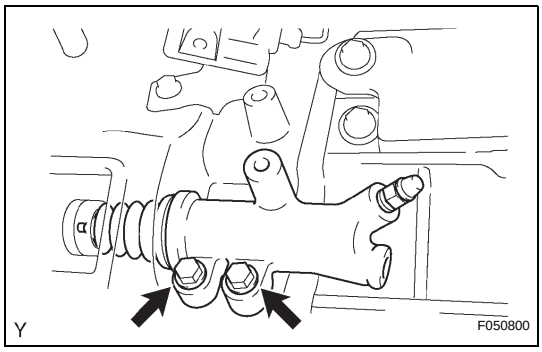

CL

DISASSEMBLY

1. REMOVE CLUTCH RELEASE CYLINDER KIT

(a) Remove the boot from the cylinder body.

(b) Remove the push rod from the cylinder body.

(c) Using compressed air, remove the piston together with the spring from the cylinder.

NOTICE:

Do not damage the inside of the cylinder body.

(d) Remove the 2 cylinder piston cups from the piston.

(e) Remove the bleeder plug cap from the bleeder plug.

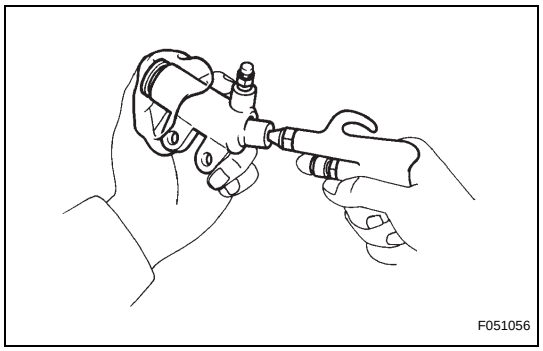

2. REMOVE RELEASE CYLINDER BLEEDER PLUG

REASSEMBLY

1. **INSTALL RELEASE CYLINDER BLEEDER PLUG**
   Torque: 11 N*m (110 kgf*cm, 8.0 ft.*lbf)
2. **INSTALL CLUTCH RELEASE CYLINDER KIT**
   (a) Install the bleeder plug cap onto the bleeder plug.
   (b) Install 2 new cylinder cups onto the piston.
   (c) Install the spring onto the cylinder body.
   (d) Apply lithium soap base glycol grease to the portions shown in the illustration.
   (e) Install the piston onto the cylinder body.
   NOTICE:
   Do not damage the inside of the cylinder body.
   (f) Install the push rod into the cylinder body.
   (g) Install the boot onto the cylinder body.

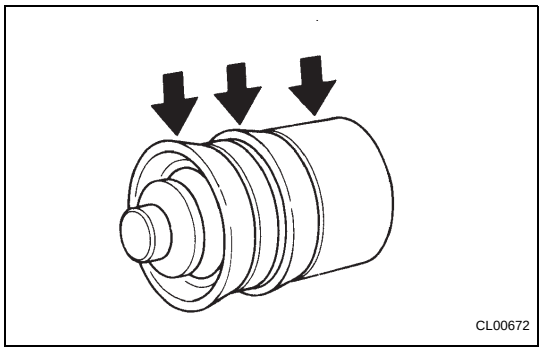

INSTALLATION

1. **INSTALL CLUTCH RELEASE CYLINDER ASSEMBLY**
   (a) Install the clutch release cylinder with the 2 bolts.
   Torque: 12 N*m (120 kgf*cm, 8.7 ft.*lbf)

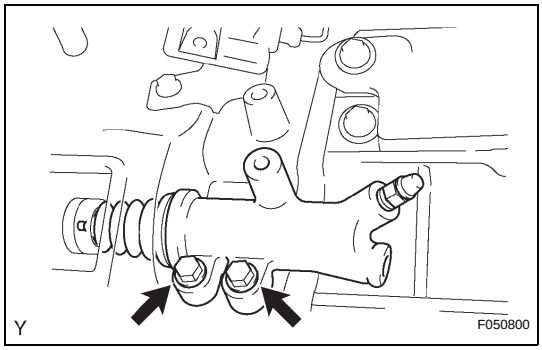

2. **CONNECT CLUTCH RELEASE CYLINDER TO FLEXIBLE HOSE TUBE**
   (a) Using SST, connect the flexible hose tube.
   SST 09023-00101
   Torque: 15 N*m (153 kgf*cm, 11 ft.*lbf)
   (b) Install the clutch line bracket.
   Torque: 12 N*m (120 kgf*cm, 8.7 ft.*lbf)

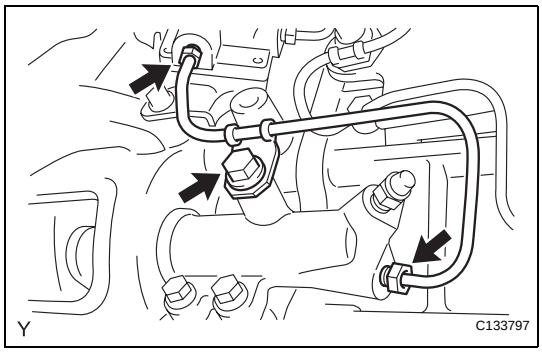

3. **BLEED CLUTCH PIPE LINE**
   (a) Fill the brake reservoir tank with brake fluid and bleed the clutch system.
   Torque: 11 N*m (110 kgf*cm, 8.0 ft.*lbf)
4. **CHECK FOR CLUTCH FLUID LEAKAGE**
5. **INSTALL NO. 1 CLUTCH HOUSING COVER**
   (a) Install the No. 1 clutch housing cover with the 3 bolts.
   Torque: 12 N*m (120 kgf*cm, 8.7 ft.*lbf)
6. **CHECK FLUID LEVEL IN RESERVOIR**

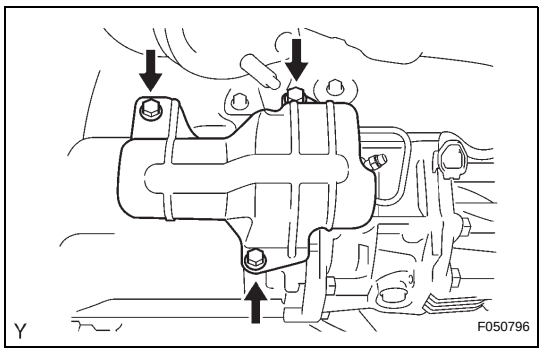

CL

CLUTCH ACCUMULATOR

COMPONENTS

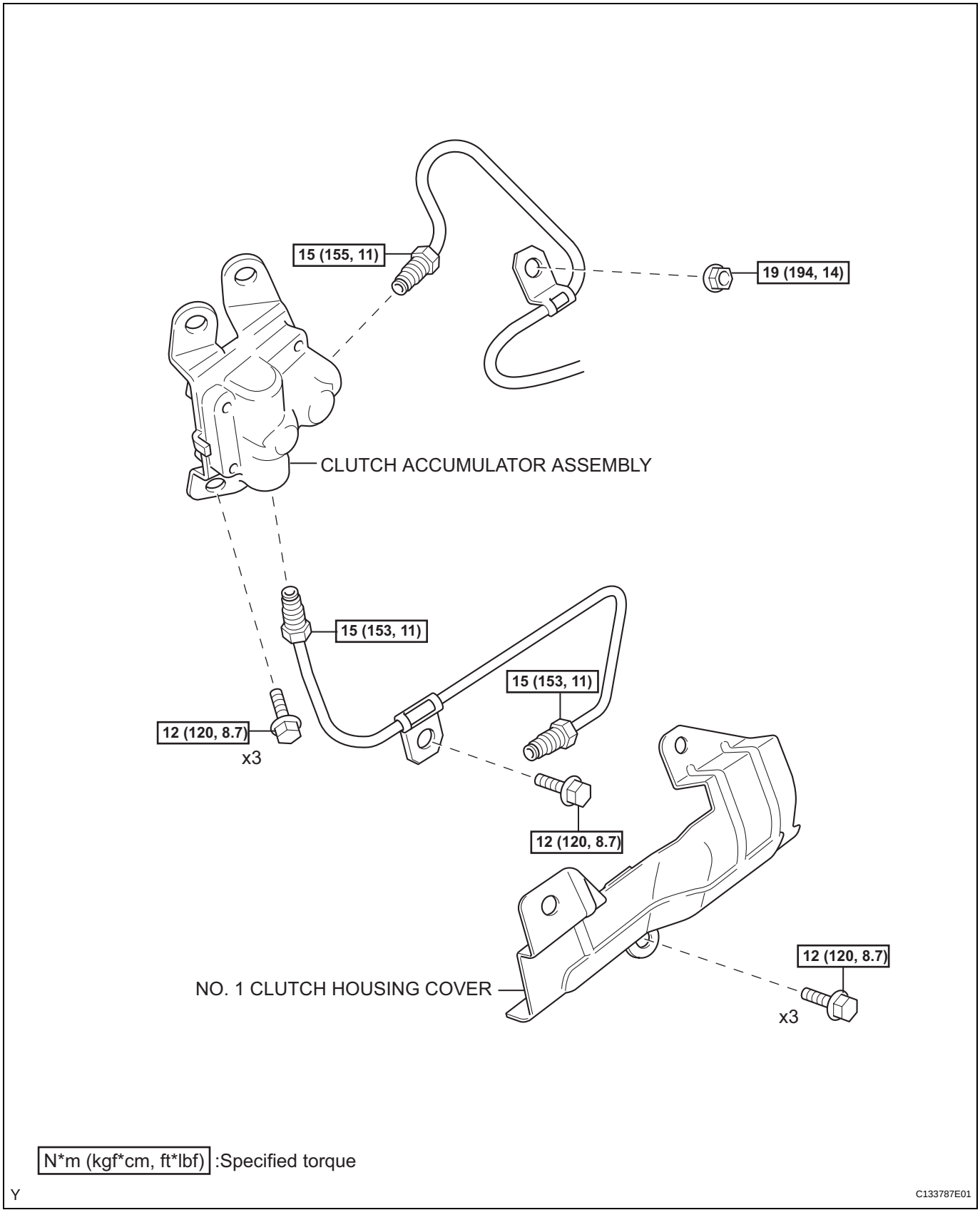

CL

REMOVAL

1. **DRAIN CLUTCH FLUID**
2. **REMOVE NO. 2 EXHAUST FRONT PIPE ASSEMBLY (See page EX-4)**
3. **REMOVE NO. 2 MANIFOLD STAY (See page MT-9)**
4. **REMOVE NO. 1 CLUTCH HOUSING COVER**
   (a) Remove the 3 bolts and No. 1 clutch housing cover.

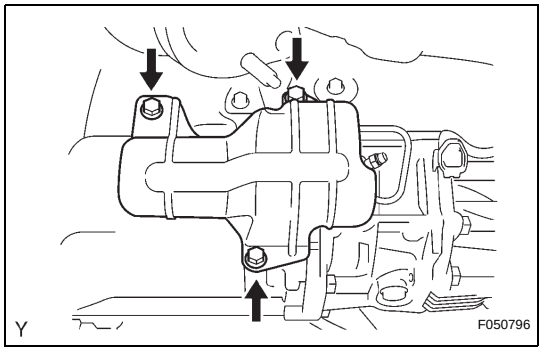

5. **REMOVE CLUTCH ACCUMULATOR ASSEMBLY**
   (a) Using SST, disconnect the flexible hose tube from the clutch accumulator.
   SST 09023-00101
   HINT:
   Use a container to catch the fluid.
   (b) Remove the bolt and clutch line bracket.

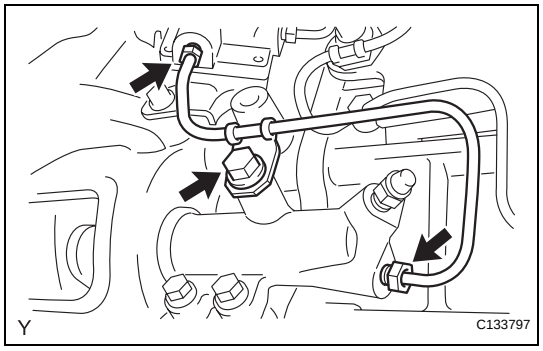

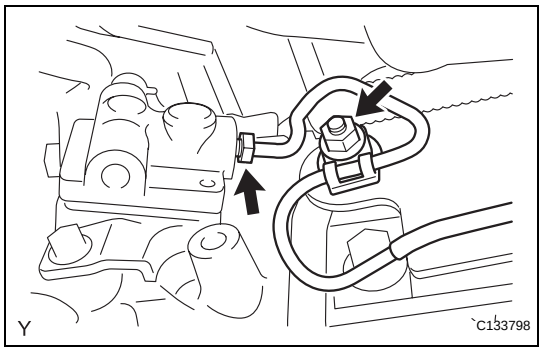

   (c) Using SST, disconnect the flexible hose tube from the clutch accumulator.
   SST 09023-00101
   (d) Remove the nut and clutch line bracket.

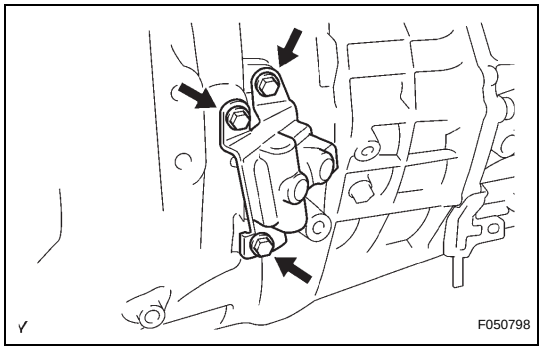

   (e) Remove the 3 bolts and clutch accumulator.

CL

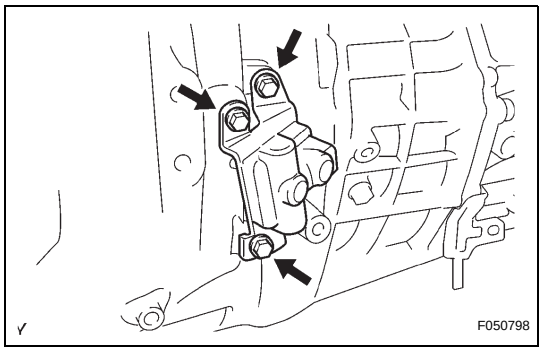

INSTALLATION

1. INSTALL CLUTCH ACCUMULATOR ASSEMBLY

(a) Install the clutch accumulator with the 3 bolts.
Torque: 12 N*m (120 kgf*cm, 8.7 ft.*lbf)

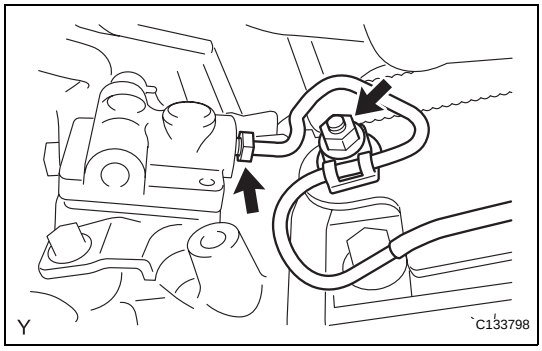

(b) Using SST, tighten the flexible hose tube.
SST 09023-00101
Torque: 15 N*m (155 kgf*cm, 11 ft.*lbf)

(c) Install the clutch line bracket with the nut
Torque: 19 N*m (194 kgf*cm, 14 ft.*lbf)

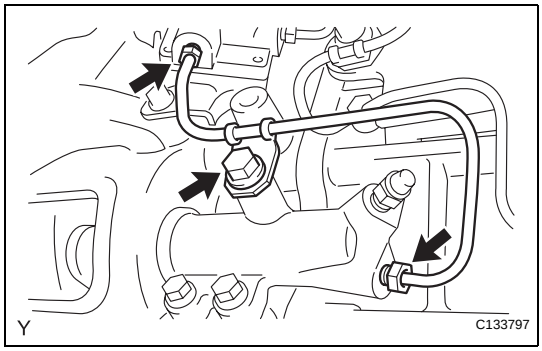

(d) Using SST, connect the flexible hose tube.
SST 09023-00101
Torque: 15 N*m (153 kgf*cm, 11 ft.*lbf)

(e) Install the clutch line bracket with the bolt.
Torque: 12 N*m (120 kgf*cm, 8.7 ft.*lbf)

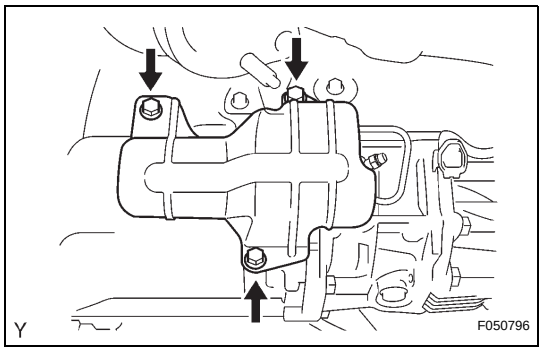

2. INSTALL NO. 1 CLUTCH HOUSING COVER

(a) Install the No. 1 clutch housing cover with the 3 bolts.
Torque: 12 N*m (120 kgf*cm, 8.7 ft.*lbf)

3. INSTALL NO. 2 MANIFOLD STAY (See page MT-14)

4. INSTALL NO. 2 EXHAUST FRONT PIPE ASSEMBLY (See page EX-5)

5. BLEED CLUTCH PIPE LINE

(a) Fill the brake reservoir tank with the brake fluid and bleed the clutch system.
Torque: 11 N*m (110 kgf*cm, 8.0 ft.*lbf)

6. CHECK FOR CLUTCH FLUID LEAKAGE

7. CHECK FLUID LEVEL IN RESERVOIR

CL

CLUTCH UNIT

COMPONENTS

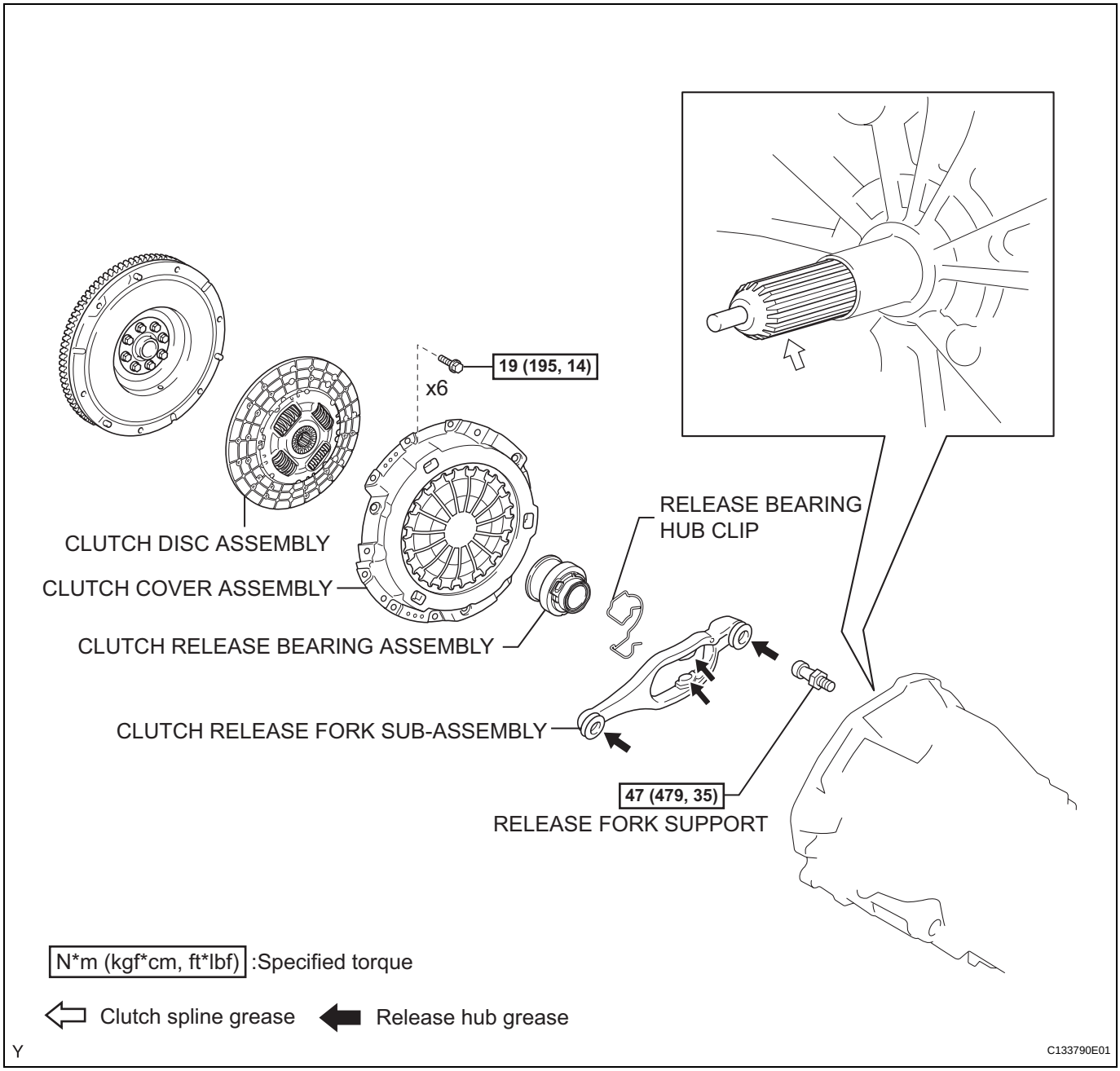

CL

REMOVAL

1. **REMOVE MANUAL TRANSMISSION ASSEMBLY**
(See page MT-8)

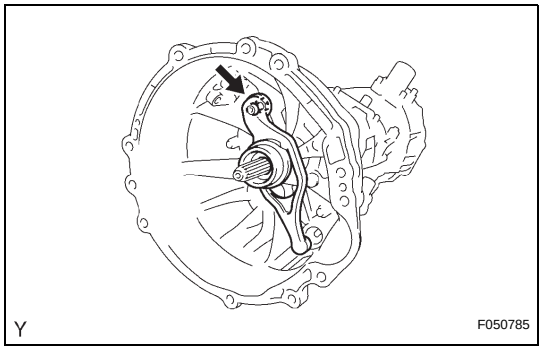

2. **REMOVE CLUTCH RELEASE FORK SUB-ASSEMBLY**
   (a) Remove the clutch release fork together with the clutch release bearing from the transmission assembly.

3. **REMOVE CLUTCH RELEASE BEARING ASSEMBLY**
   (a) Remove the clutch release bearing assembly from the clutch release fork.

4. **REMOVE RELEASE FORK SUPPORT**
   (a) Remove the release fork support from the transaxle assembly.

5. **REMOVE RELEASE BEARING HUB CLIP**

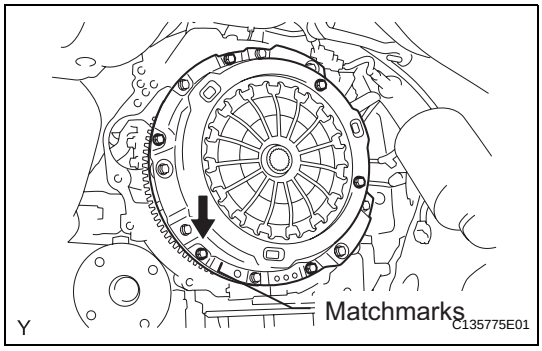

6. **REMOVE CLUTCH COVER ASSEMBLY**
   (a) Align the matchmark on the clutch cover assembly with the one on the flywheel sub-assembly.
   (b) Loosen each set bolt one turn at a time until the spring tension is released.
   (c) Remove the 6 bolts and clutch cover assembly.
   NOTICE:
   Do not drop the clutch disc assembly.

7. **REMOVE CLUTCH DISC ASSEMBLY**
NOTICE:
Keep the lining part of the clutch disc assembly, pressure plate and surface of the flywheel sub-assembly free from oil and foreign matter.

INSPECTION

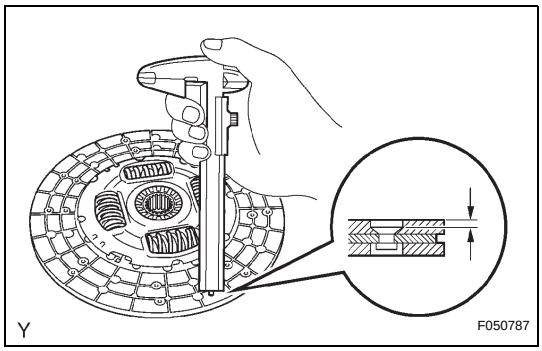

1. **INSPECT CLUTCH DISC ASSEMBLY**
   (a) Using vernier calipers, measure the rivet head depth.
   Maximum rivet depth:
   0.3 mm (0.012 in.)
   If necessary, replace the clutch disc assembly.
   (b) Install the clutch disc assembly onto the transaxle assembly.
   NOTICE:
   Insert the clutch disc assembly in the correct orientation.

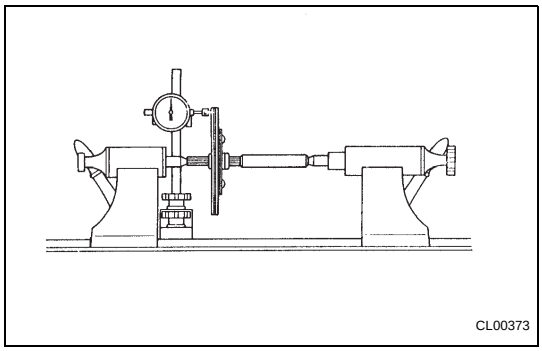

   (c) Using a dial indicator, check the clutch disc assembly runout.
   Minimum runout:
   0.7 mm (0.028 in.)
   If necessary, replace the clutch disc assembly.

CL

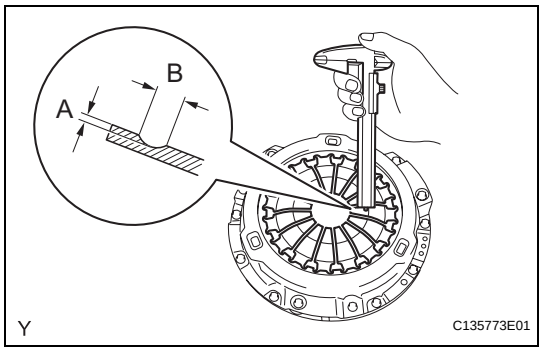

2. INSPECT CLUTCH COVER ASSEMBLY

(a) Using vernier calipers, inspect the depth and width of wear of the diaphragm spring.

Minimum:

A (Depth): 0.5 mm (0.020 in.)

B (Width): 6.0 mm (0.236 in.)

If necessary, replace the clutch cover assembly.

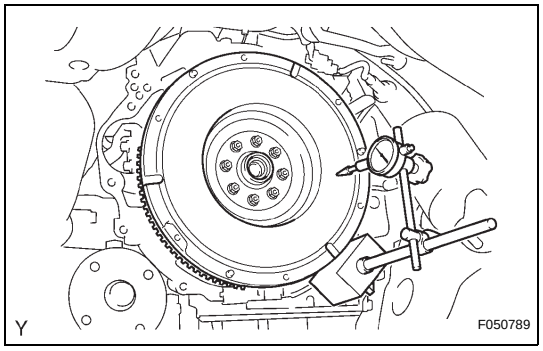

3. INSPECT FLYWHEEL SUB-ASSEMBLY

(a) Using a dial indicator, inspect the flywheel sub-assembly runout.

Maximum runout:

0.1 mm (0.004 in.)

If necessary, replace the flywheel sub-assembly.

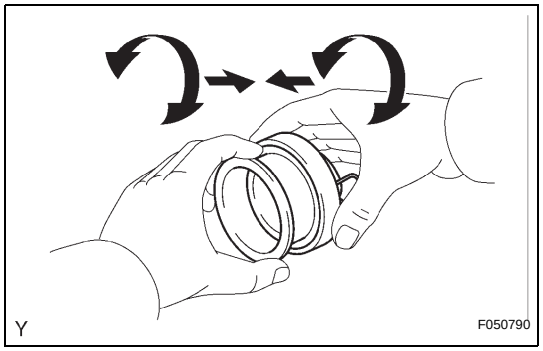

4. INSPECT CLUTCH RELEASE BEARING ASSEMBLY

(a) Turn the release bearing by hand while applying force in the axial direction.

HINT:

The bearing is permanently lubricated and requires no cleaning or lubrication.

If necessary, replace the release bearing assembly.

INSTALLATION

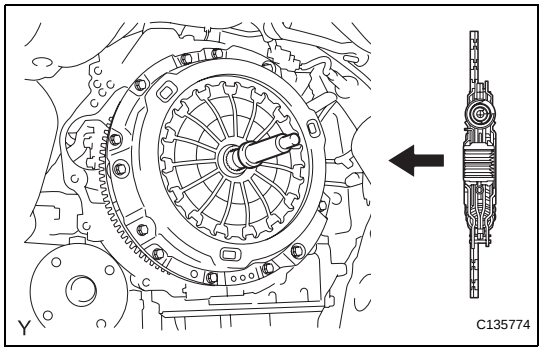

1. INSTALL CLUTCH DISC ASSEMBLY

(a) Insert SST into the clutch disc assembly, then insert them into the flywheel sub-assembly.

SST 09301-00220

NOTICE:

Insert the clutch disc assembly in the correct orientation.

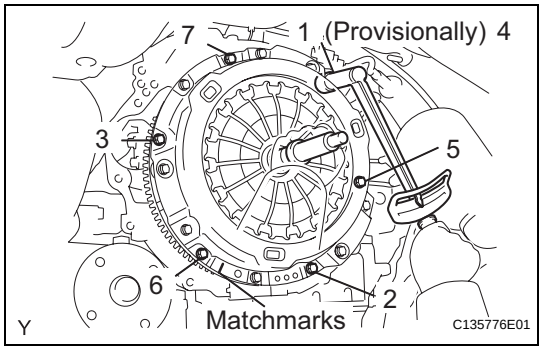

2. INSTALL CLUTCH COVER ASSEMBLY

(a) Align the matchmarks on the clutch cover assembly and flywheel sub-assembly.

(b) Following the procedures shown in the illustration, tighten the 6 bolts, in the order starting with the bolt located near the knock pin on the top.

Torque: 19 N*m (195 kgf*cm, 14 ft.*lbf)

HINT:

- Following the order in the illustration, uniformly tighten the bolts.

CL

- Move SST up and down, right and left lightly, after checking that the disc is in the center, and tighten the bolts.

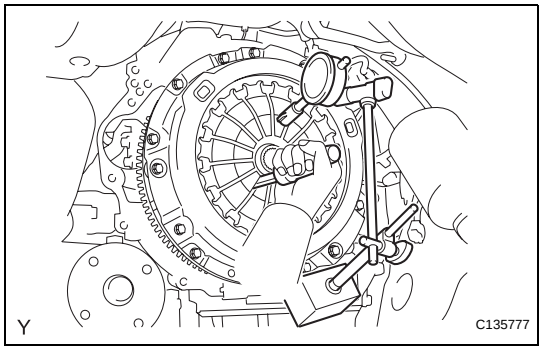

3. INSPECT AND ADJUST CLUTCH COVER ASSEMBLY

(a) Using a dial indicator with roller instrument, check the diaphragm spring tip alignment.
Maximum non-alignment:
0.5 mm (0.020 in.)
If the alignment is not as specified, adjust the diaphragm spring tip alignment using SST.
SST 09333-00013

4. INSTALL RELEASE FORK SUPPORT

(a) Install the release fork support onto the transaxle assembly.
Torque: 47 N*m (479 kgf*cm, 35 ft.*lbf)

5. INSTALL RELEASE BEARING HUB CLIP

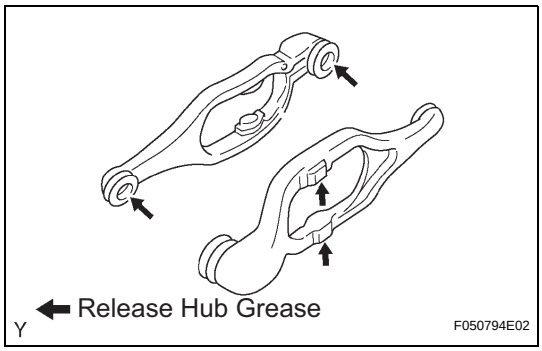

6. INSTALL CLUTCH RELEASE FORK SUB-ASSEMBLY

(a) Apply release hub grease to the release fork and release bearing assembly contact surfaces, release fork and push rod contact surface and release fork pivot point.
Sealant:
Toyota Genuine Release Hub Grease or Equivalent

(b) Install the release fork onto the release bearing assembly.

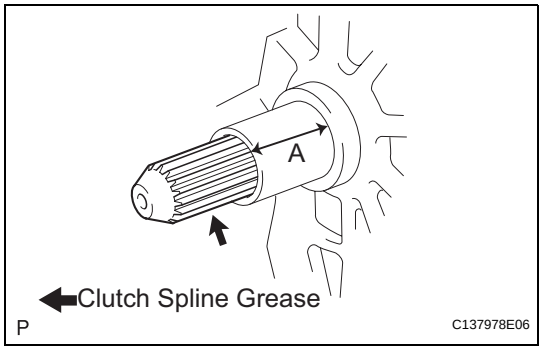

7. INSTALL CLUTCH RELEASE BEARING ASSEMBLY

(a) Apply clutch spline grease to the input shaft spline.
Sealant:
Toyota Genuine Clutch Spline Grease or Equivalent
NOTICE:
Do not apply grease to portion A shown in the illustration.

(b) Install the bearing onto the release fork, and then install them onto the transaxle assembly.
NOTICE:
After installation, move the fork forward and backward to check that the release bearing slides smoothly.

8. INSTALL MANUAL TRANSMISSION ASSEMBLY
(See page MT-11)

CL

CLUTCH START SWITCH

COMPONENTS

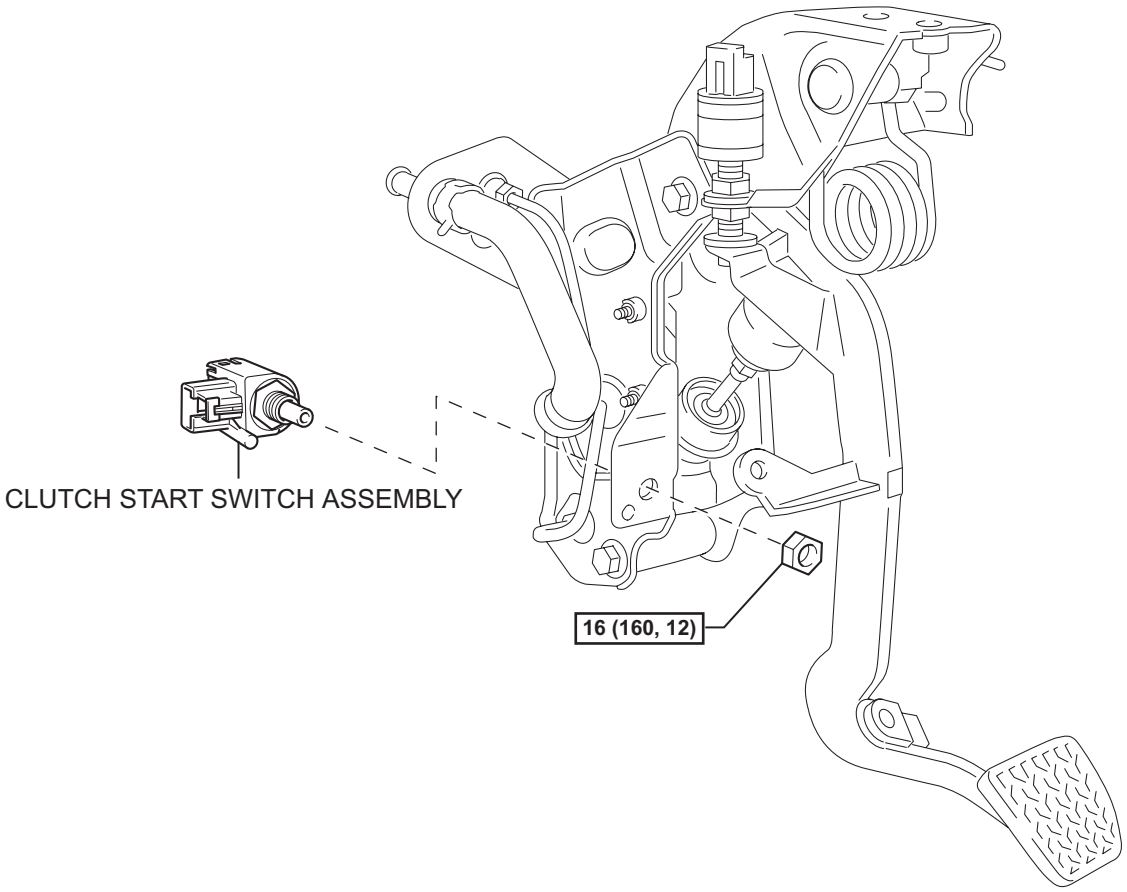

N*m (kgf*cm, ft*lbf) :Specified torque

Y

C133791E01

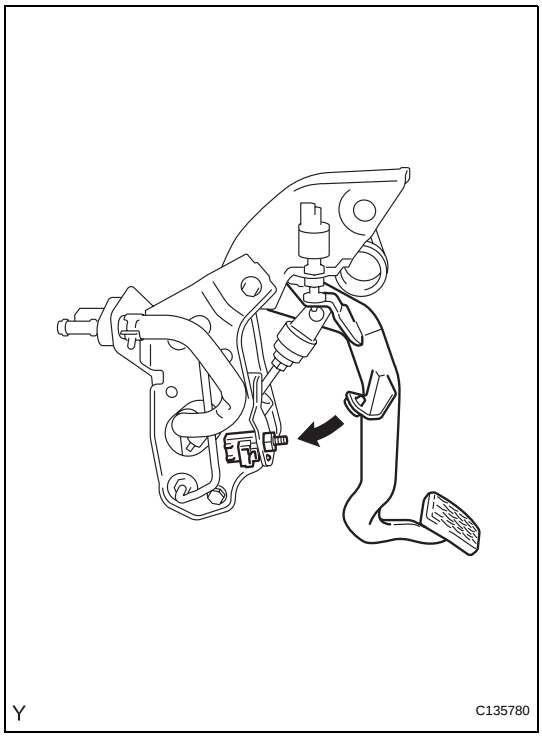

ON-VEHICLE INSPECTION

1. CHECK CLUTCH START SYSTEM

(a) Check that the engine does not start when the clutch pedal is released.

(b) Check that the engine starts when the clutch pedal is fully depressed.
If necessary, replace the clutch start switch assembly.

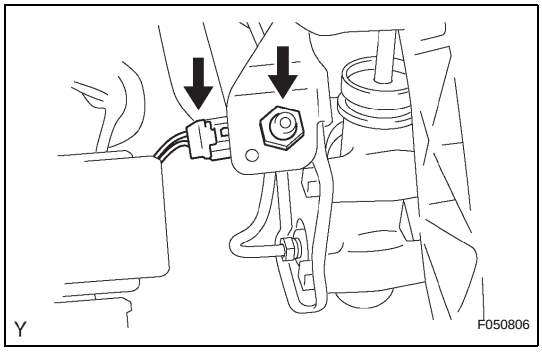

REMOVAL

1. REMOVE CLUTCH START SWITCH ASSEMBLY

(a) Disconnect the clutch start switch assembly connector.

(b) Remove the nut and remove the clutch start switch assembly from the clutch pedal support.

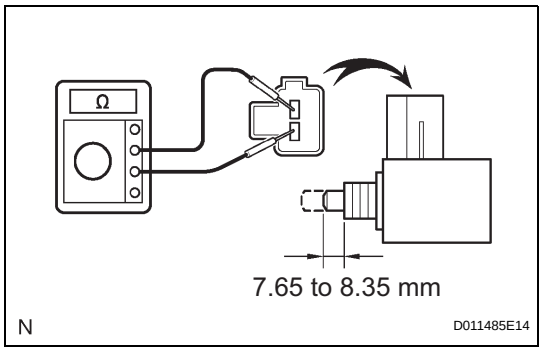

INSPECTION

1. INSPECT CLUTCH START SWITCH ASSEMBLY

(a) Measure the resistance between the terminals when the switch is ON and OFF.

Switch Position	Specified Condition
ON (pushed)	Below 1Ω
OFF (released)	10 kΩ or higher

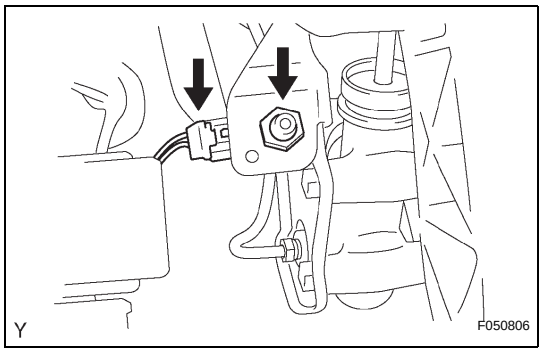

INSTALLATION

1. INSTALL CLUTCH START SWITCH ASSEMBLY

(a) Install the clutch start switch assembly with the nut.
Torque: 16 N*m (160 kgf*cm, 12 ft.*lbf)

(b) Connect the clutch start switch assembly connector.

2. INSPECT CLUTCH START SWITCH ASSEMBLY (See page CL-26)

CL

CLUTCH START CANCEL SWITCH

INSPECTION

1. INSPECT CLUTCH START CANCEL SWITCH ASSEMBLY

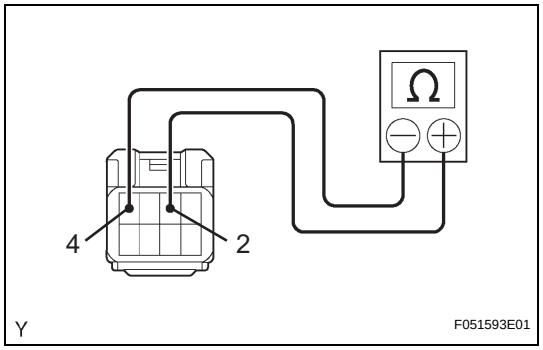

(a) Using an ohmmeter, check that there is resistance between terminals 2 and 4.

Standard:

10 kΩor higher

If the result is not as specified, replace the clutch start cancel switch.

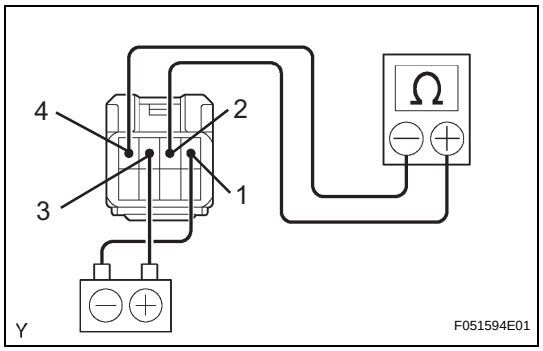

(b) Connect the positive (+) lead from the battery to terminal 3 and connect the negative (-) lead to terminal 1.

(c) Using an ohmmeter, check that there is resistance between terminals 2 and 4.

Standard:

10 kΩor higher

If the result is not as specified, replace the clutch start cancel switch.

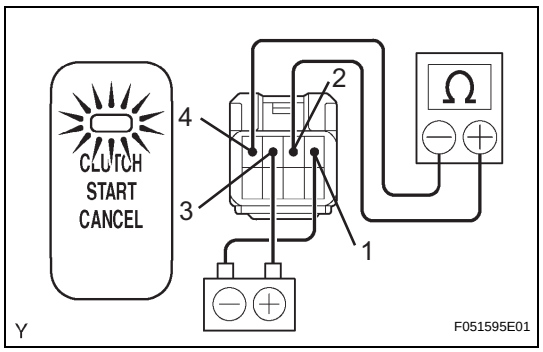

(d) Check that the indicator light comes on and there is resistance between terminals 2 and 4 when the switch is pressed.

Standard:

Blow 1 Ω

If the result is not as specified, replace the clutch start cancel switch.

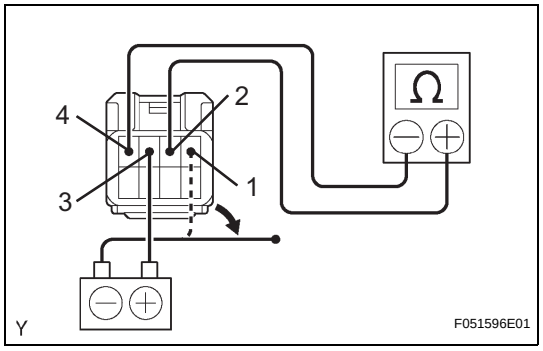

(e) Using an ohmmeter, check that there is resistance between terminals 2 and 4 when the battery lead is disconnected.

Standard:

10 kΩor higher

If the result is not as specified, replace the clutch start cancel switch.

CL

COOLING SYSTEM

PARTS LOCATION

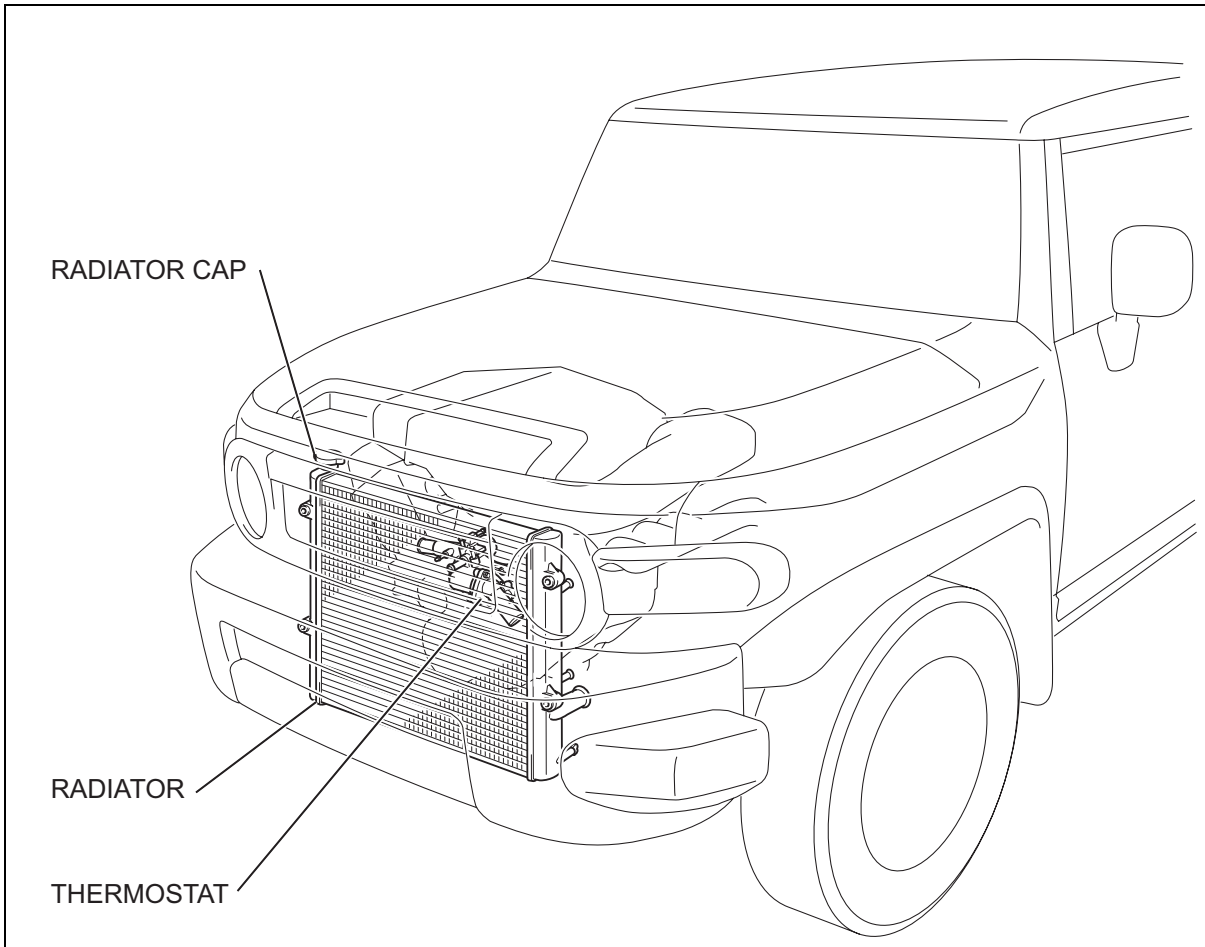

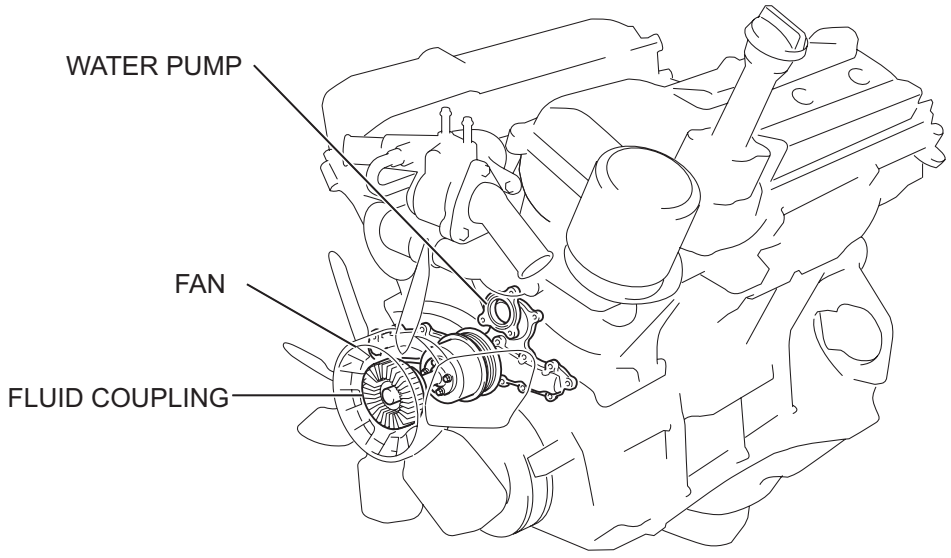

Y

A126471E01

CO

ON-VEHICLE INSPECTION

1. CHECK COOLING SYSTEM FOR LEAKAGE

(a) Remove the radiator cap.

CAUTION:
To avoid the danger of being burned, do not remove the radiator cap while the engine and radiator are still hot. Thermal expansion will cause hot engine coolant and steam to blow out from the radiator.

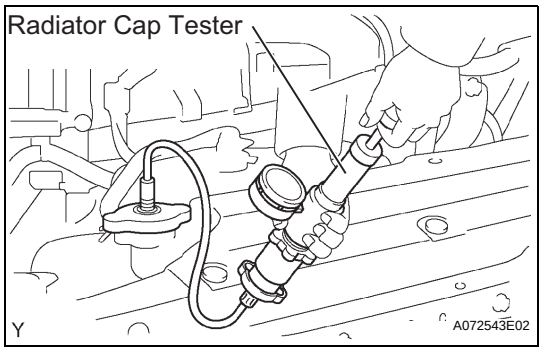

(b) Fill the radiator with coolant and attach a radiator cap tester.

(c) Warm up the engine.

(d) Pump it to 118 kPa (1.2 kgf/cm^2, 17.1 psi), then check that the pressure does not drop.
If the pressure drops, check the hoses, radiator and water pump for leakage. If there are no signs of external coolant leakage, check the heater core, cylinder block and head.

(e) Reinstall the radiator cap.

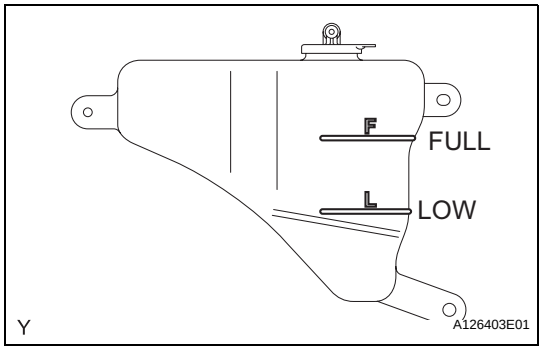

2. CHECK COOLANT LEVEL OF RESERVOIR

(a) The engine coolant should be between the LOW and FULL lines when the engine is cold.
If low, check for leakage and add Toyota Super Long Life Coolant or similar high quality ethylene glycol based non-silicate, non-amine, non-nitrite, and non-borate coolant with long-life hybrid organic acid technology up to the FULL line.

3. CHECK ENGINE COOLANT QUALITY

(a) Remove the radiator cap.

CAUTION:
To avoid the danger of being burned, do not remove the radiator cap while the engine and radiator are still hot. Thermal expansion will cause hot engine coolant and steam to blow out from the radiator.

(b) Check for any excessive deposits of rust or scale around the radiator cap and radiator filler hole; the coolant should be free of oil.
If excessively dirty, replace the coolant.

(c) Reinstall the radiator cap.

CO

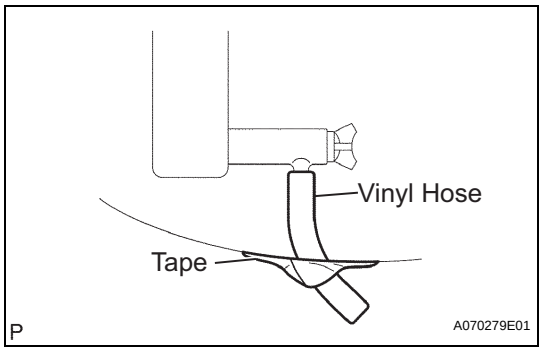

COOLANT

REPLACEMENT

1. DRAIN ENGINE COOLANT

CAUTION:

To avoid the danger of being burned, do not remove the radiator cap while the engine and radiator are still hot. Thermal expansion will cause hot engine coolant and steam to blow out from the radiator.

(a) Remove the service hole cover from the engine under cover.

(b) Install a vinyl hose onto the drain on the radiator side.

(c) Fix the vinyl hose with tape.

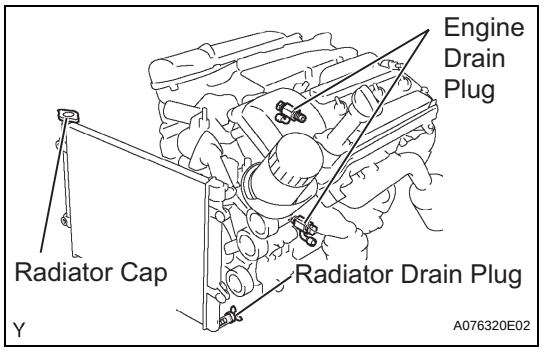

(d) Loosen the 3 drain plugs on the engine and radiator, and drain the coolant.

(e) Remove the radiator cap.

(f) Drain the coolant from the reservoir tank.

(g) Tighten the 3 drain plugs.

Torque: 13 N*m (130 kgf*cm, 9 ft.*lbf) for the engine

(h) Remove the vinyl hose from the radiator.

2. ADD ENGINE COOLANT

(a) Pour coolant into the radiator until it overflows.

Capacity

Transmission	Capacity
Manual Transmission	9.4 liters (9.9 Us qts, 8.3 Imp. qts)
Automatic Transmission	9.8 liters (10.4 Us qts, 8.6 Imp. qts)

NOTICE:

Do not substitute plain water for engine coolant.

HINT:

- Use of improper coolants may damage the engine cooling system.
- Use only TOYOTA SLLC or similar high quality ethylene glycol based non-silicate, non-amine, non-nitrite, and non-borate coolant with long-life hybrid organic acid technology (coolant with long-life hybrid organic acid technology consists of a combination of low phosphates and organic acids).
- New TOYOTA vehicles are filled with TOYOTA SLLC (color is pink, premixed ethylene glycol concentration is approximately 50 % and freezing temperature is -35°C (-31°F)). When replacing the coolant, TOYOTA SLLC is recommended.

(b) Check the coolant level inside the radiator by squeezing the inlet and outlet radiator hoses several times by hand. If the coolant level goes down, add coolant.

(c) Install the radiator cap securely.

(d) Slowly pour coolant into the radiator reservoir until it reaches the FULL line.

(e) Warm up the engine until the cooling fan operates.

(1) Set the air conditioning as follows while warming up the engine.

Item	Condition
Fan Speed	Any setting except OFF
Temperature	Toward WARM
Air Conditioning Switch	OFF

(2) Maintain the engine speed at 2,000 to 2,500 rpm and warm up the engine until the cooling fan operates.

NOTICE:

- **Make sure that the radiator reservoir still has some coolant in it.**
- **Pay attention to the needle of the water temperature meter. Make sure that the needle does not show an abnormally high temperature.**
- **If there is not enough coolant, the engine may burn out or overheat.**

(f) Squeeze the inlet and outlet radiator hoses several times by hand while warming up the engine to bleed the air.

CAUTION:

When pressing the radiator hoses:

- **Wear protective gloves.**
- **Be careful as the radiator hoses are hot.**
- **Keep your hands away from the fan.**

(g) Stop the engine and wait until the coolant cools down.

(h) Remove the radiator cap and check the coolant level inside the radiator.

(i) If the coolant level is below the full level, repeat the operation until the coolant level remains at the full level.

(j) Check the coolant level inside the radiator reservoir tank again. If it is below the full level, add coolant.

3. CHECK FOR ENGINE COOLANT LEAKAGE

(a) Fill the radiator with coolant and attach a radiator cap tester.

(b) Pump it to 177 kPa (1.8 kgf/cm^2 25.7 psi), then check for leakage.

WATER PUMP

COMPONENTS

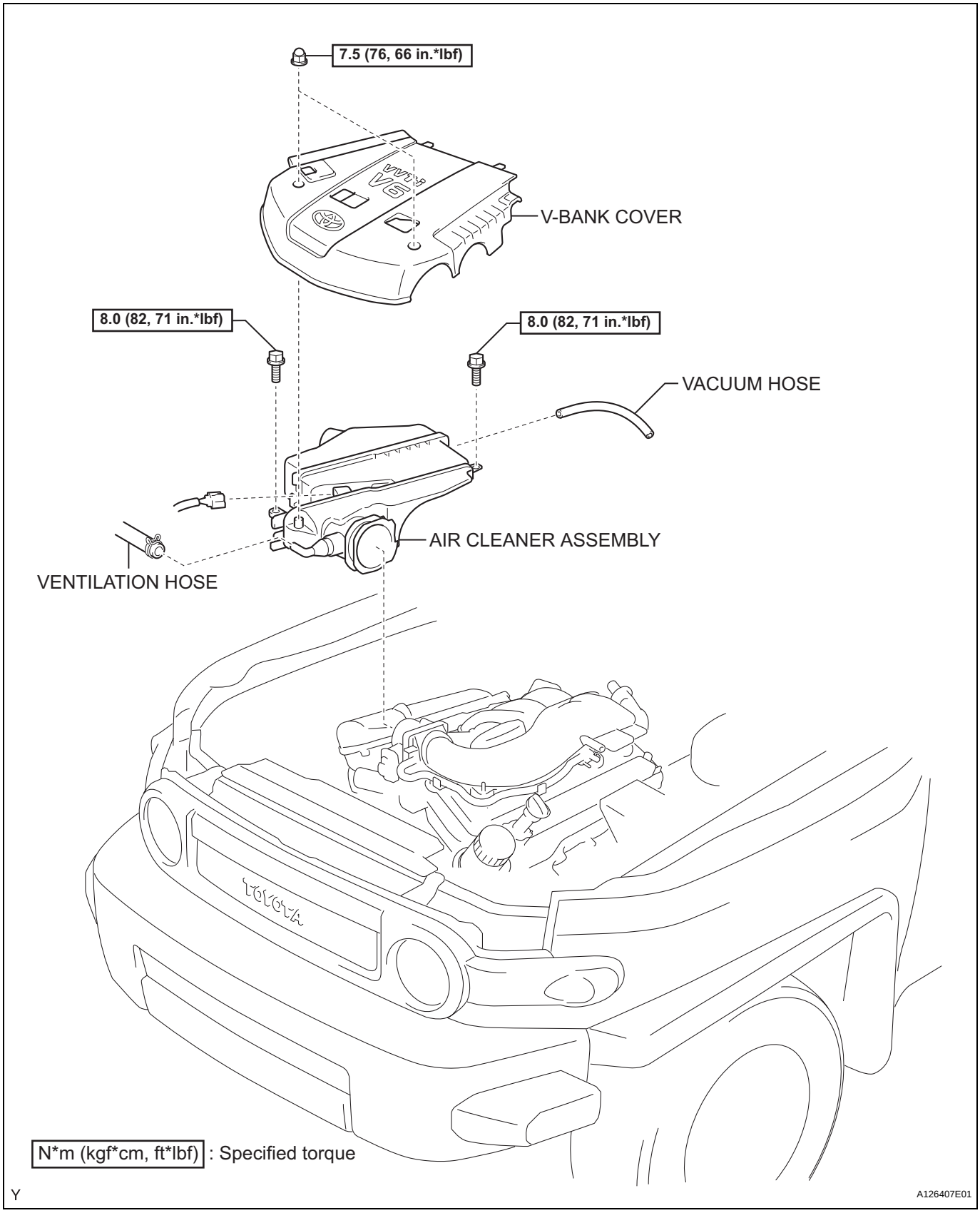

CO

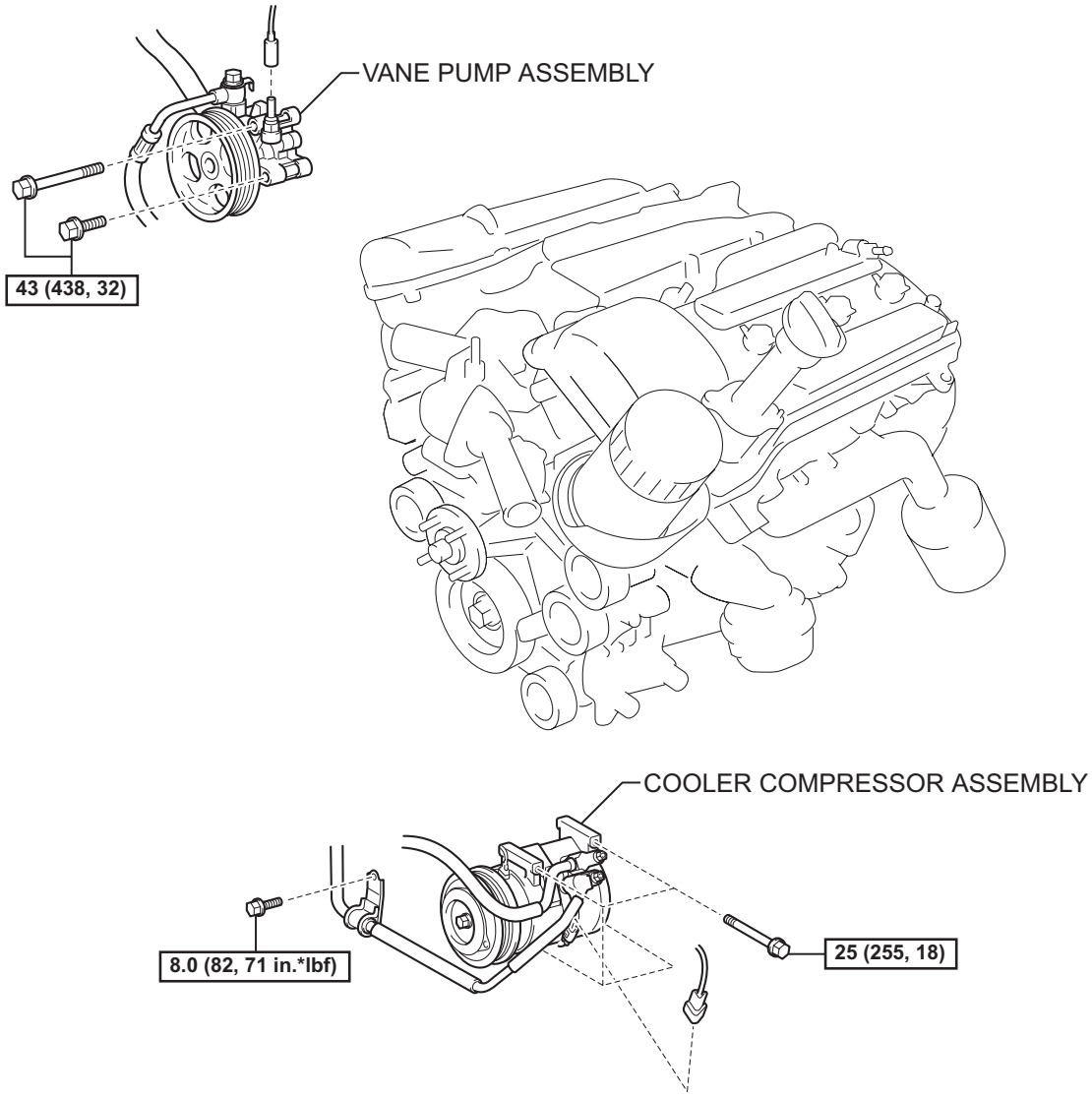

CO

N*m (kgf*cm, ft*lbf) : Specified torque

● Non-reusable part

Y

A126421E02

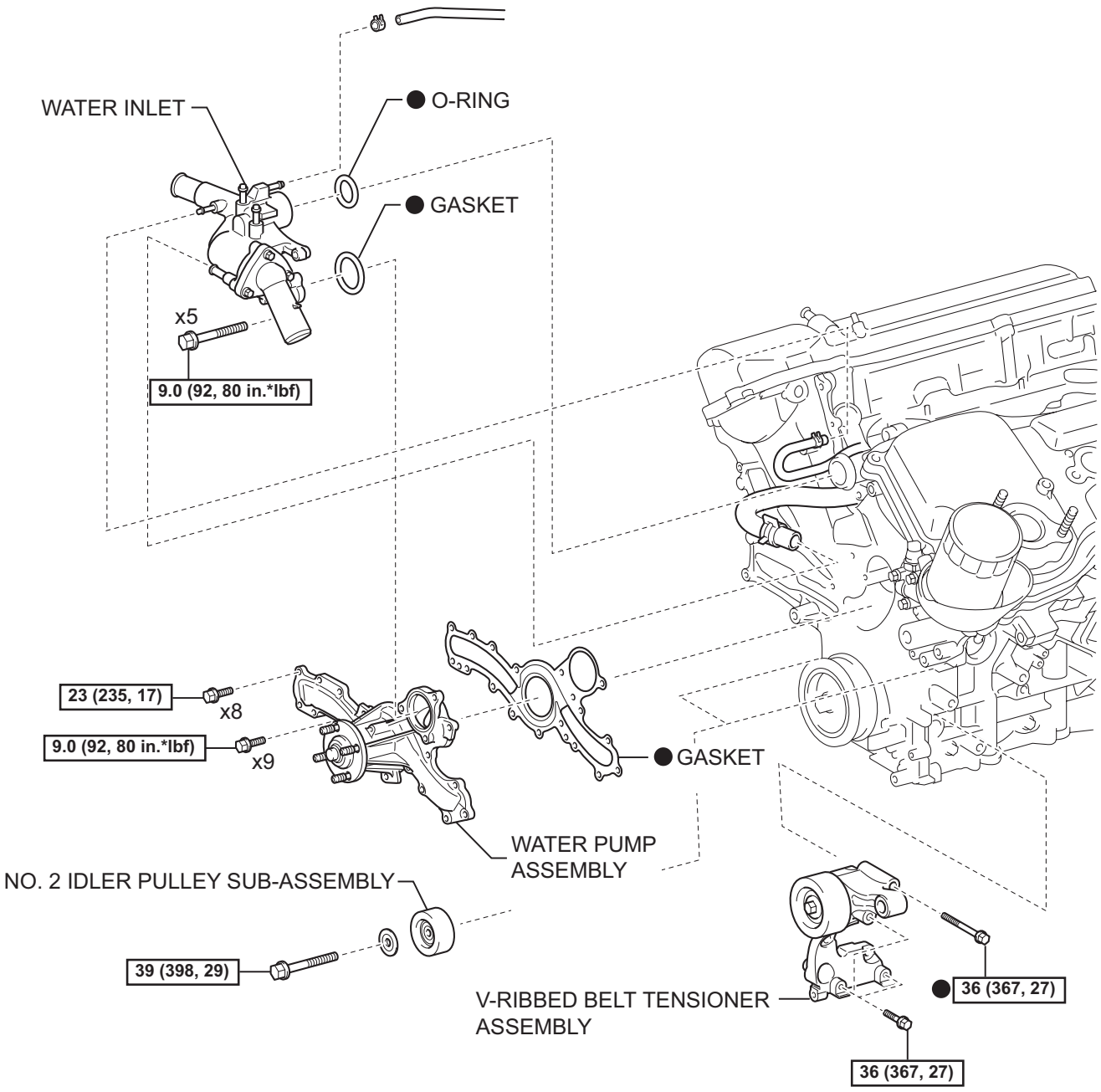

CO

N*m (kgf*cm, ft*lbf) : Specified torque

● Non-reusable part

Y

A126419E01

REMOVAL

1. **DISCONNECT CABLE FROM NEGATIVE BATTERY TERMINAL**
2. **REMOVE FAN**
   Refer to the procedures up to "REMOVE FAN" (See page CO-17).
3. **REMOVE V-BANK COVER (See page ES-428)**
4. **REMOVE AIR CLEANER ASSEMBLY (See page ES-429)**
5. **REMOVE GENERATOR ASSEMBLY**
   Refer to the procedures up to "REMOVE GENERATOR ASSEMBLY" (See page CH-9)
6. **REMOVE WATER INLET**
   (a) Disconnect the 2 radiator hoses.

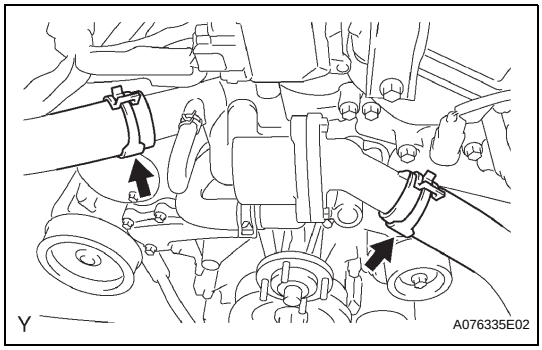

   (b) Disconnect the 5 water by-pass hoses.

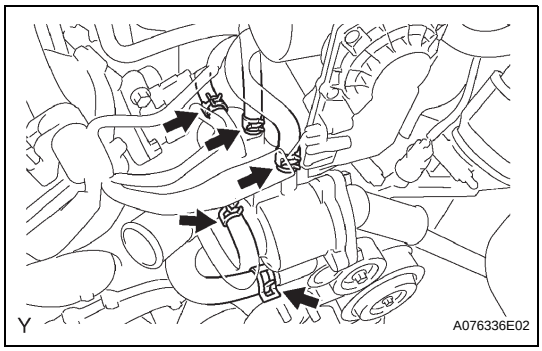

   (c) Remove the 5 bolts and water inlet.
   (d) Remove the O-ring from the water outlet pipe.
   (e) Remove the gasket from the water pump.

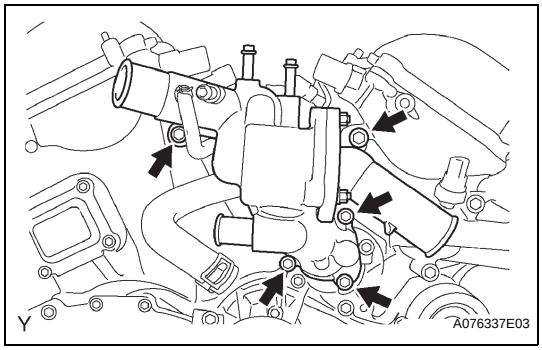

7. **REMOVE NO. 2 IDLER PULLEY SUB-ASSEMBLY (See page EM-23)**
8. **SEPARATE COOLER COMPRESSOR ASSEMBLY (See page ES-420)**
9. **REMOVE V-RIBBED BELT TENSIONER ASSEMBLY (See page EM-22)**
10. **SEPARATE VANE PUMP ASSEMBLY (See page EM-22)**

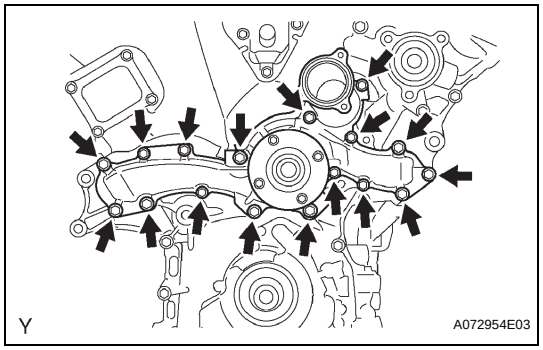

11. REMOVE WATER PUMP ASSEMBLY

(a) Remove the 17 bolts, then remove the water pump and gasket.

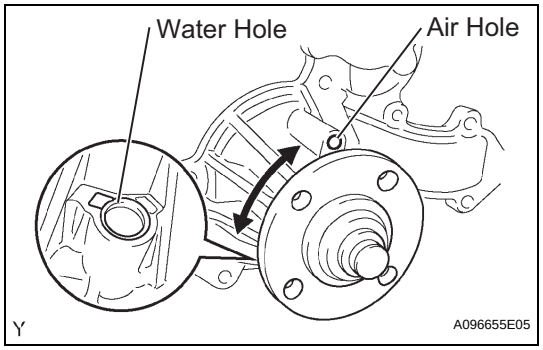

INSPECTION

1. INSPECT WATER PUMP ASSEMBLY

(a) Visually check the water hole for coolant leakage. If leakage is found, replace the water pump assembly.

(b) Turn the pulley and check that the water pump bearing moves smoothly and quietly. If necessary, replace the water pump assembly.

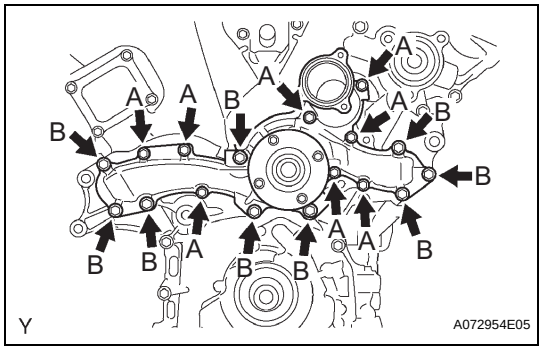

INSTALLATION

1. INSTALL WATER PUMP ASSEMBLY

(a) Install a new gasket and the water pump with the 17 bolts.

Torque: For Bolt A
9.0 N*m (92 kgf*cm, 80 in.*lbf)
For Bolt B
23 N*m (235 kgf*cm, 17 ft.*lbf)

2. INSTALL VANE PUMP ASSEMBLY (See page EM-33)

3. INSTALL V-RIBBED BELT TENSIONER ASSEMBLY (See page EM-33)

4. INSTALL COOLER COMPRESSOR ASSEMBLY (See page ES-421)

5. INSTALL NO. 2 IDLER PULLEY SUB-ASSEMBLY (See page EM-33)

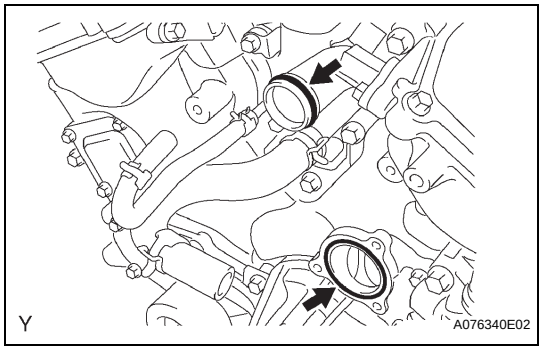

6. INSTALL WATER INLET

(a) Install a new O-ring onto the water outlet pipe.

(b) Install a new gasket onto the water pump.

(c) Apply soapy water to the O-ring.

CO

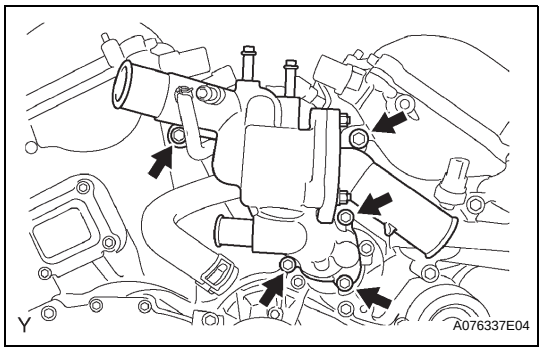

(d) Install the water inlet with the 5 bolts.
Torque: 9.0 N*m (92 kgf*cm, 80 in.*lbf)

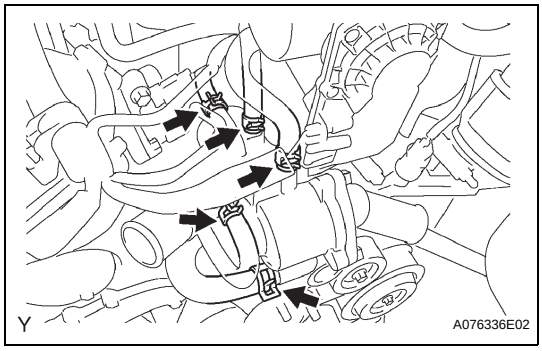

(e) Connect the 5 water by-pass hoses.

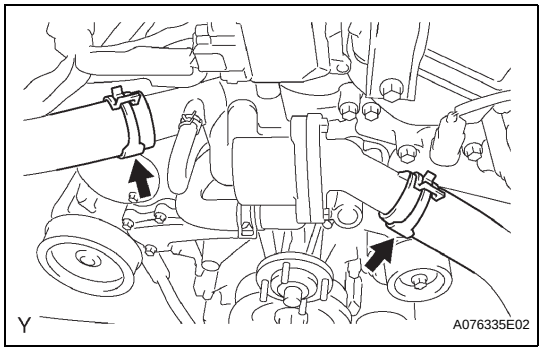

(f) Connect the 2 radiator hoses.

CO

7. **INSTALL GENERATOR ASSEMBLY**
Refer to the procedures up to "INSTALL GENERATOR ASSEMBLY" (See page CH-17)

8. **INSTALL AIR CLEANER ASSEMBLY (See page ES-431)**

9. **INSTALL FAN**
Refer to the procedures up to "INSTALL FAN" (See page CO-17).

10. **CONNECT CABLE TO NEGATIVE BATTERY TERMINAL**
Torque: 3.9 N*m (40 kgf*cm, 35 in.*lbf)

11. **INSTALL V-BANK COVER (See page ES-431)**

THERMOSTAT

COMPONENTS

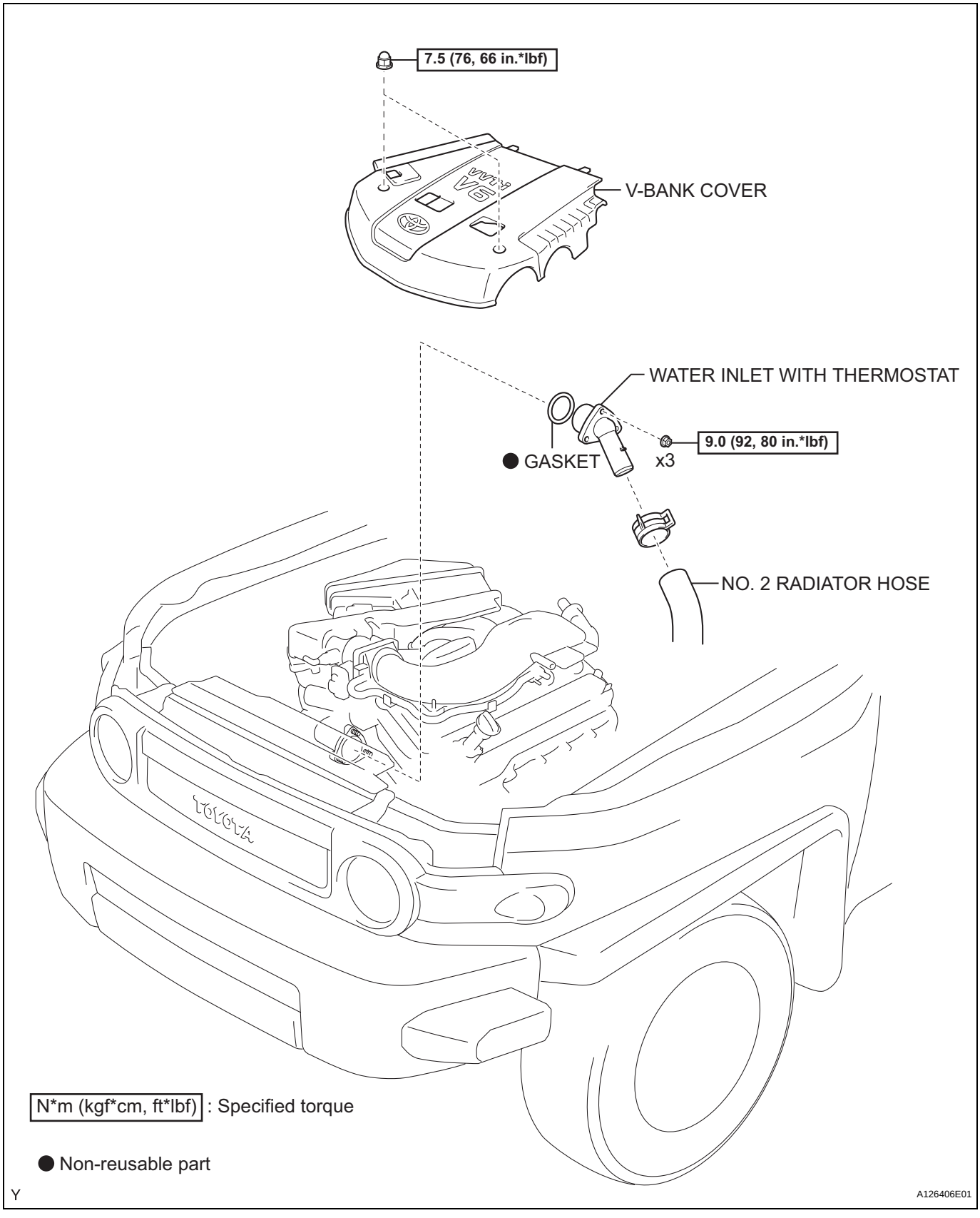

CO

REMOVAL

HINT:
If the thermostat is not installed, cooling efficiency will be reduced. Do not remove the thermostat, to prevent the engine from overheating.

1. **DISCONNECT CABLE FROM NEGATIVE BATTERY TERMINAL**
2. **DRAIN ENGINE COOLANT (See page CO-3)**
3. **REMOVE V-BANK COVER (See page ES-428)**
4. **REMOVE NO. 2 RADIATOR HOSE**
5. **REMOVE WATER INLET WITH THERMOSTAT**
   (a) Remove the 3 nuts, then remove the water inlet with thermostat and gasket.

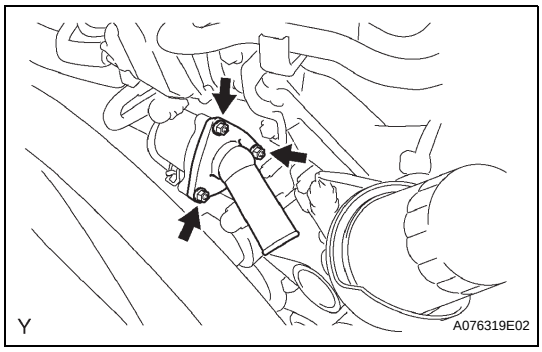

CO

INSPECTION

1. **INSPECT WATER INLET WITH THERMOSTAT**
   HINT:
   The valve opening temperature is inscribed on the thermostat.

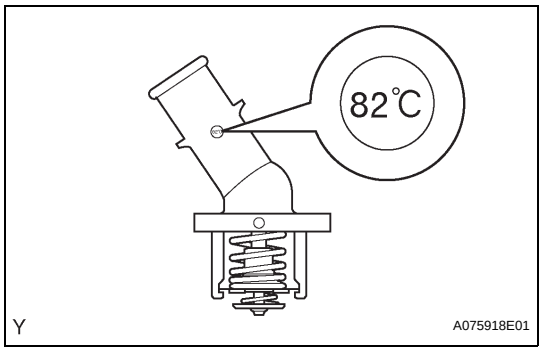

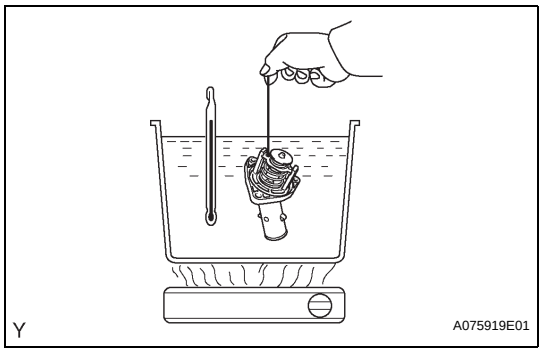

   (a) Immerse the thermostat in water, then gradually heat the water.
   (b) Check the valve opening temperature of the thermostat.
   Valve opening temperature:
   80 to 84°C (176 to 183°F)
   If the valve opening temperature is not as specified, replace the thermostat.

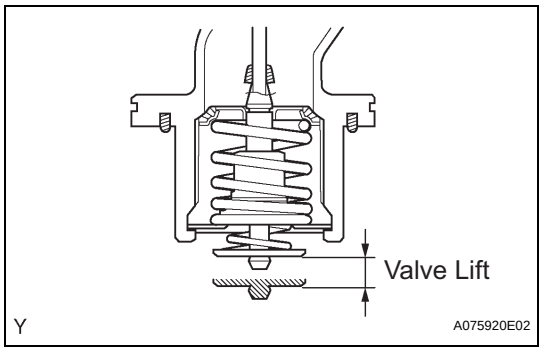

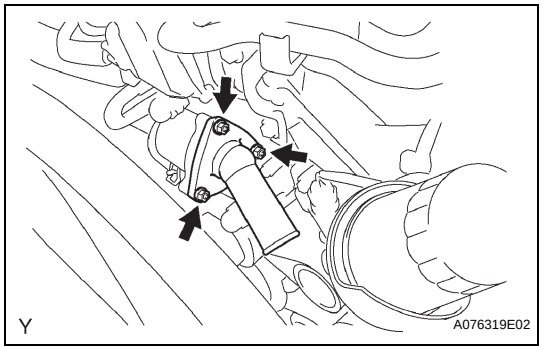

(c) Check the valve lift.
Valve lift:
8.0 mm (0.31 in.) or more at 95°C (203°F)
If the valve lift is not as specified, replace the thermostat.

(d) Check that the valve is fully closed when the thermostat is at low temperatures (below 77°C (171°F)).
If not fully closed, replace the thermostat.

INSTALLATION

1. **INSTALL WATER INLET WITH THERMOSTAT**
   (a) Install a new gasket onto the water inlet with thermostat.
   (b) Install the water inlet with thermostat with the 3 nuts.
   Torque: 9.0 N*m (92 kgf*cm, 80 in.*lbf)
2. **CONNECT NO. 2 RADIATOR HOSE**
3. **CONNECT CABLE TO NEGATIVE BATTERY TERMINAL**
   Torque: 3.9 N*m (40 kgf*cm, 35 in.*lbf)
4. **ADD ENGINE COOLANT (See page CO-3)**
5. **CHECK FOR ENGINE COOLANT LEAKAGE (See page CO-4)**
6. **INSTALL V-BANK COVER (See page ES-431)**

FAN

COMPONENTS

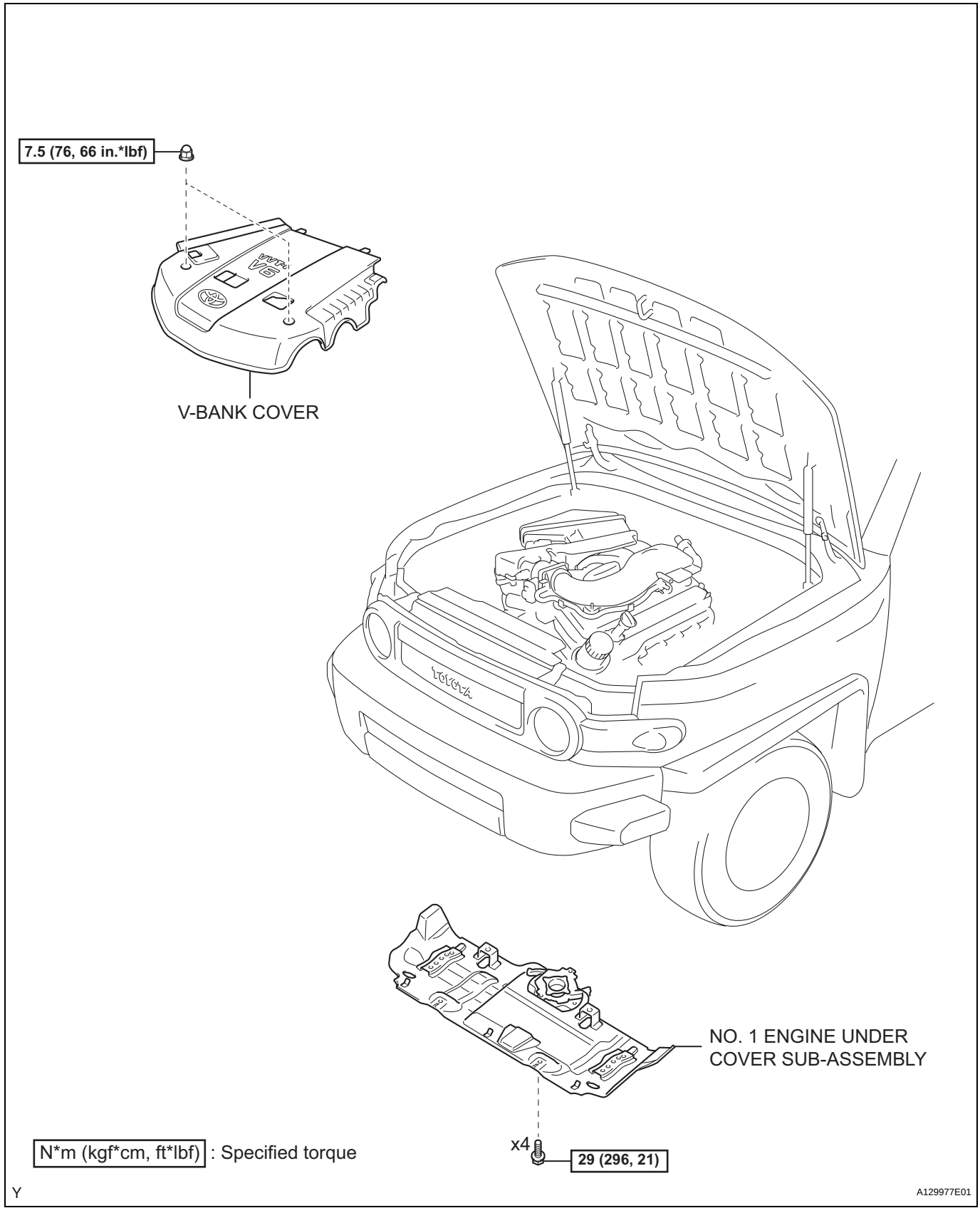

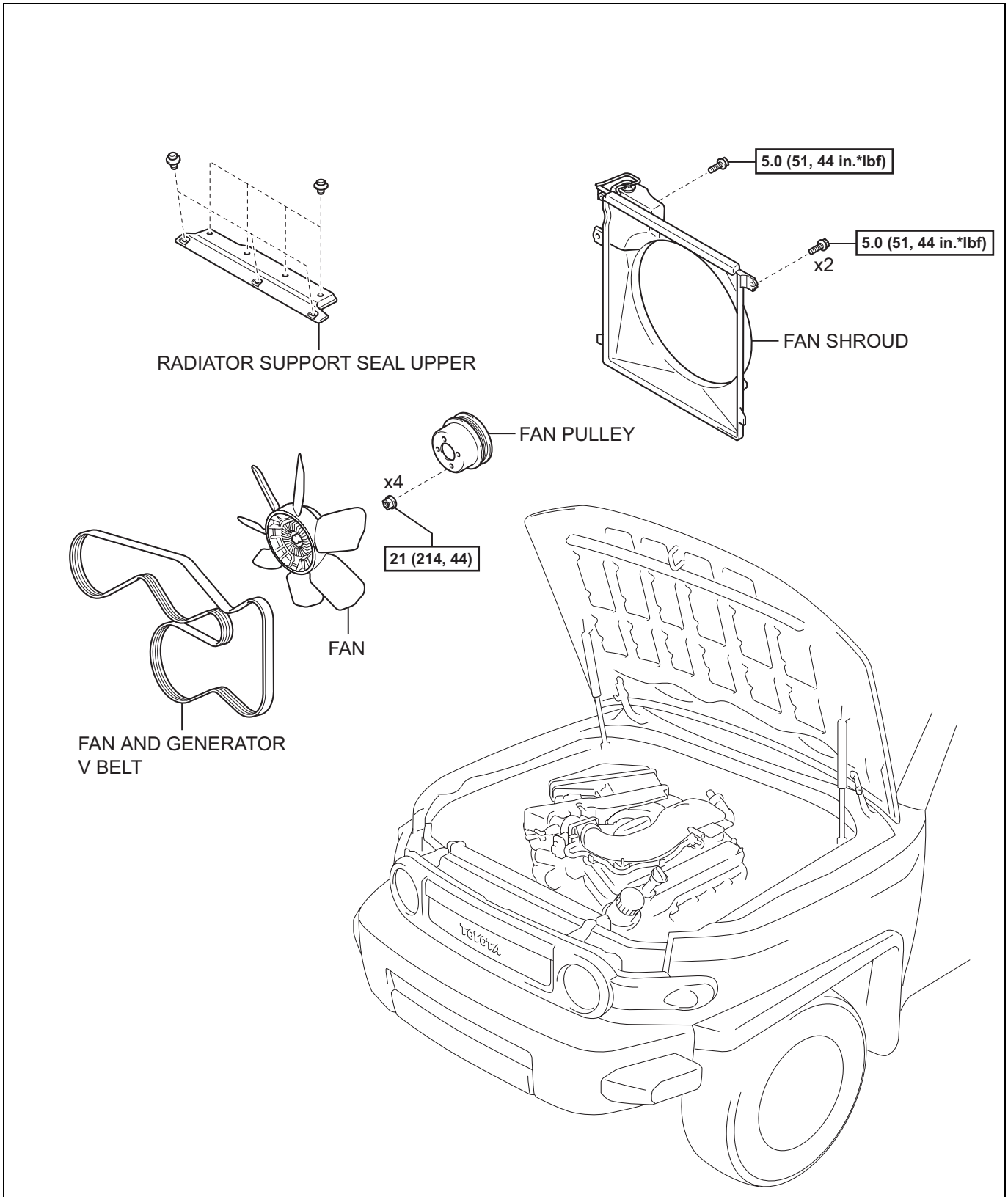

N*m (kgf*cm, ft*lbf) : Specified torque

Y

A129879E01

CO

CO

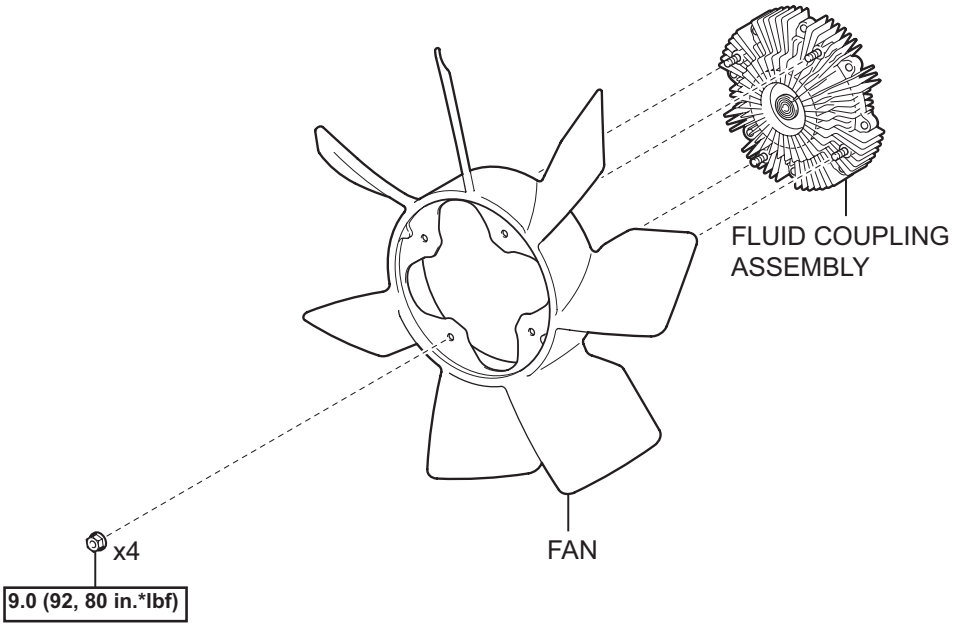

P

A137210E01

REMOVAL

1. **DISCONNECT CABLE FROM NEGATIVE BATTERY TERMINAL**
2. **REMOVE V-BANK COVER (See page ES-428)**
3. **REMOVE NO.1 ENGINE UNDER COVER SUB-ASSEMBLY (See page EM-6)**
4. **REMOVE RADIATOR SUPPORT SEAL UPPER (See page CO-23)**
5. **REMOVE FAN SHROUD (See page CO-23)**
6. **REMOVE FAN**
   (a) Remove the 4 nuts and the fan from the fluid coupling.

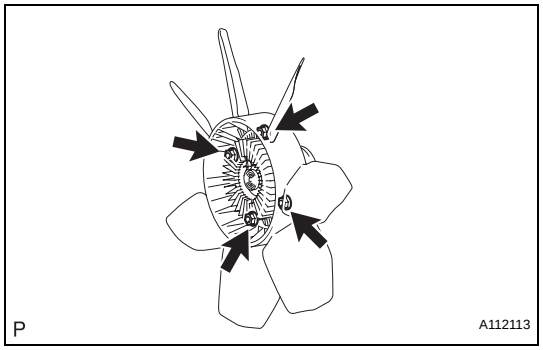

INSPECTION

1. **INSPECT FLUID COUPLING ASSEMBLY**
   (a) Check the fluid coupling for damage and silicon oil leakage.
   If necessary, replace the fluid coupling.

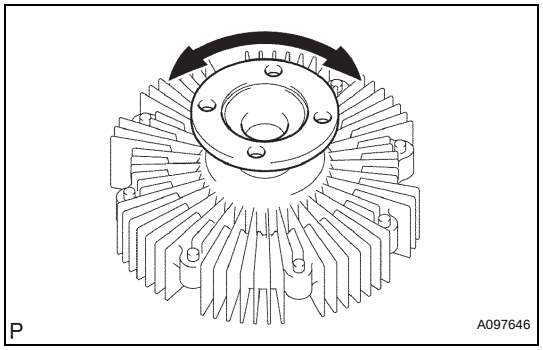

INSTALLATION

1. **INSTALL FAN**
   (a) Install the fan onto the coupling with the 4 nuts.
   Torque: 9.0 N*m (92 kgf*cm, 80 in.*lbf)
2. **INSTALL FAN SHROUD (See page CO-30)**
3. **INSTALL RADIATOR SUPPORT SEAL UPPER (See page CO-31)**
4. **INSTALL NO.1 ENGINE UNDER COVER SUB-ASSEMBLY (See page EM-7)**
5. **INSTALL V-BANK COVER (See page ES-431)**
6. **CONNECT CABLE TO NEGATIVE BATTERY TERMINAL**
   Torque: 3.9 N*m (40 kgf*cm, 35 ft.*lbf)

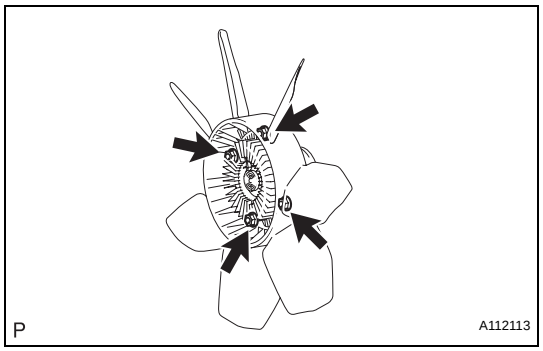

CO

RADIATOR

COMPONENTS

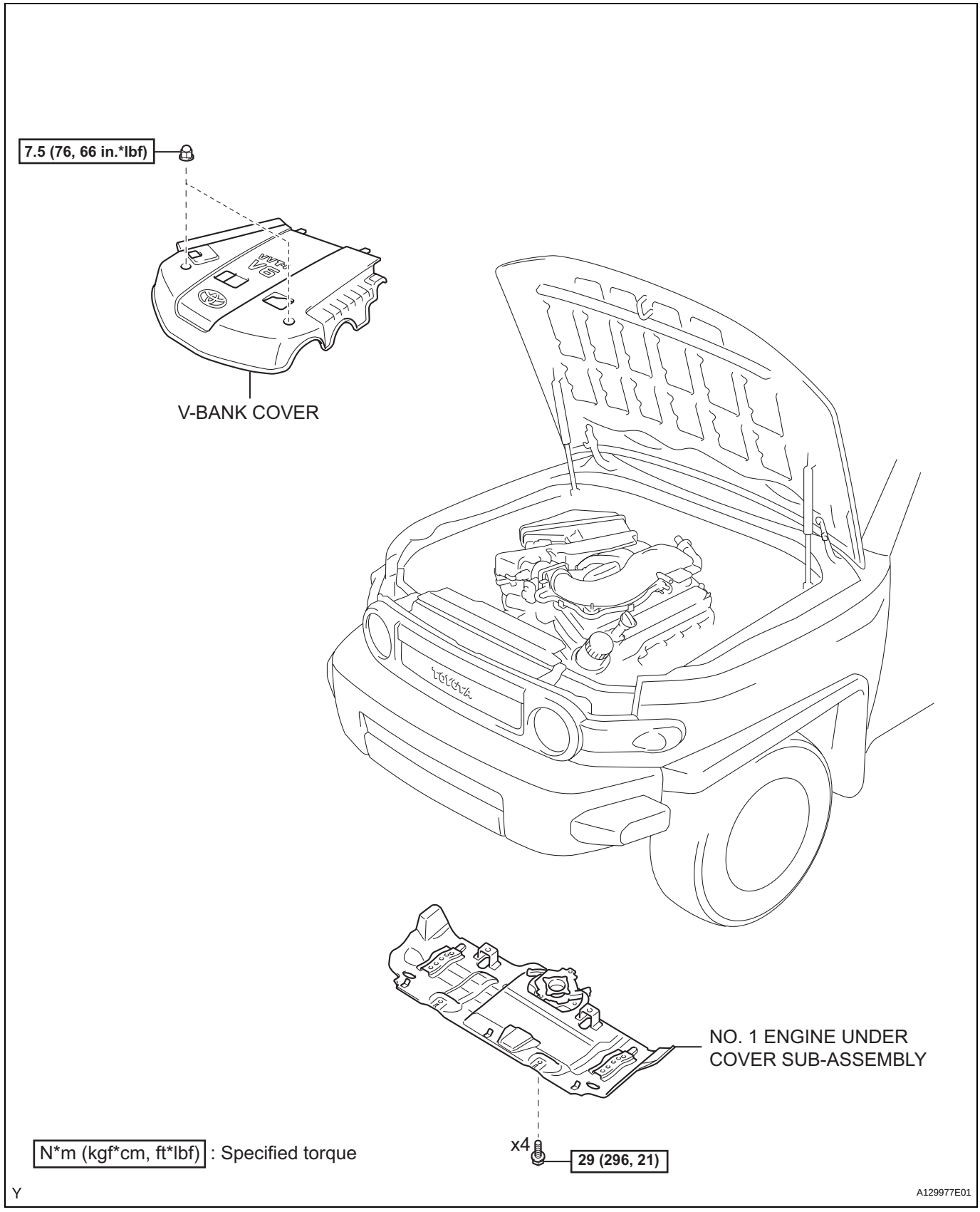

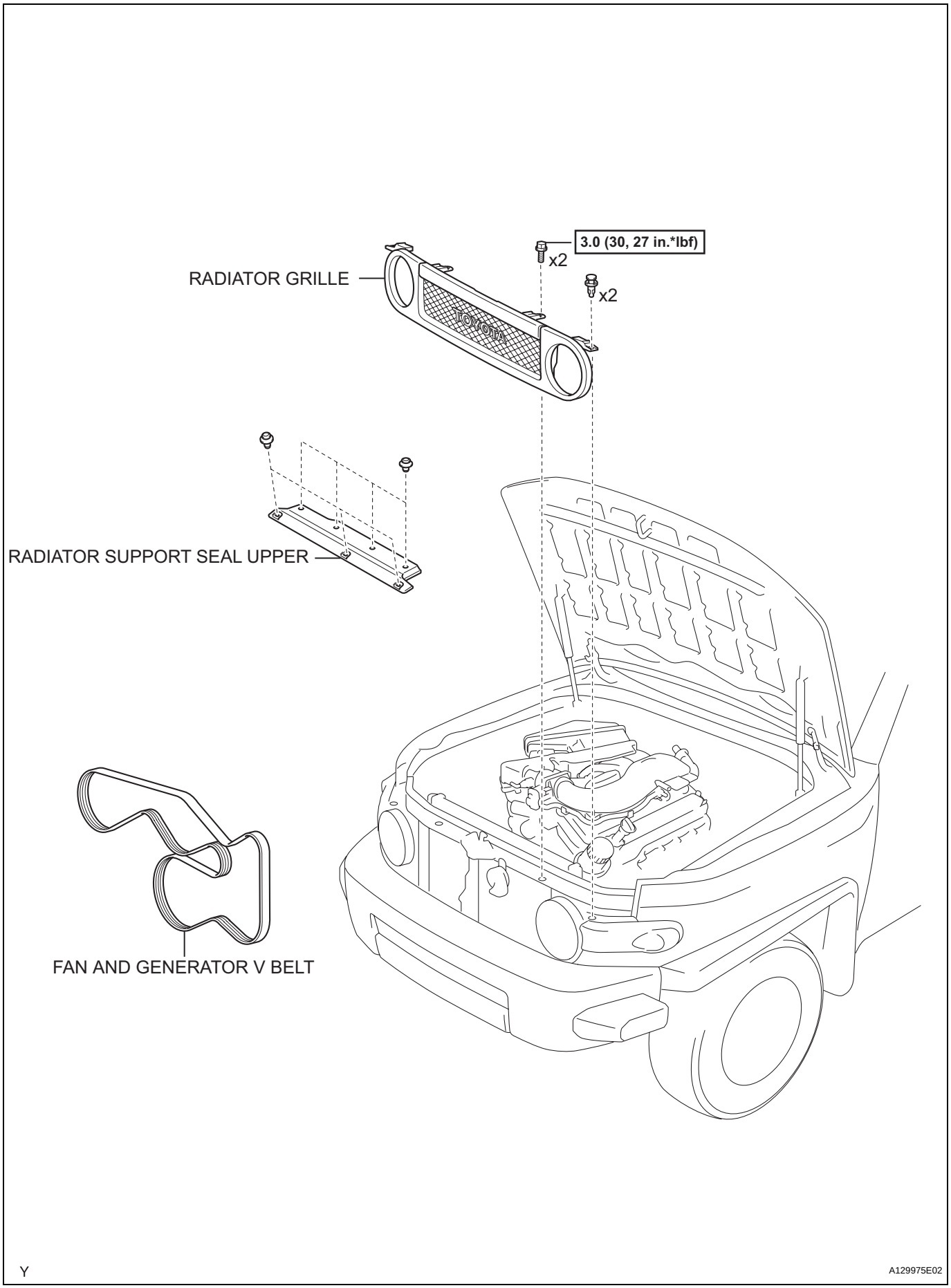
3.0 (30, 27 in.*lbf)
x2
x2
RADIATOR GRILLE
RADIATOR SUPPORT SEAL UPPER
FAN AND GENERATOR V BELT
Y
A129975E02

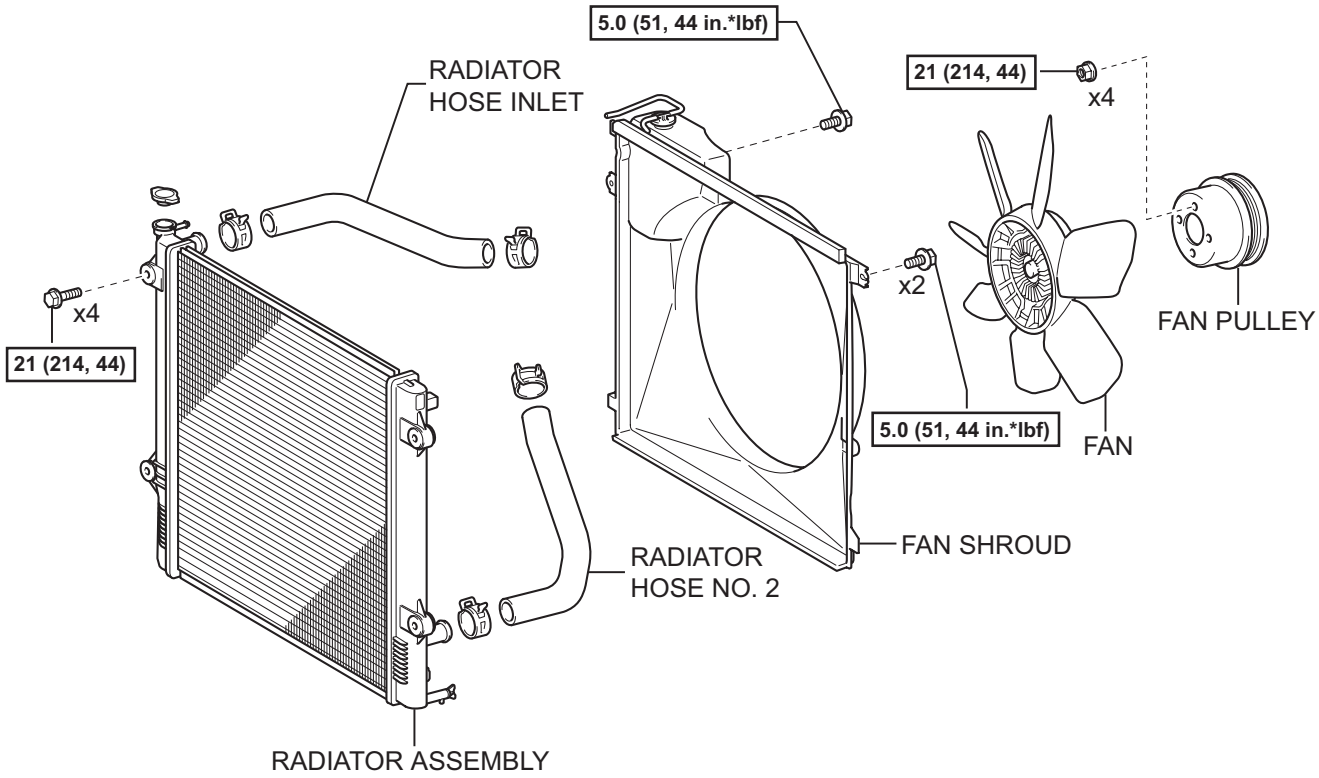

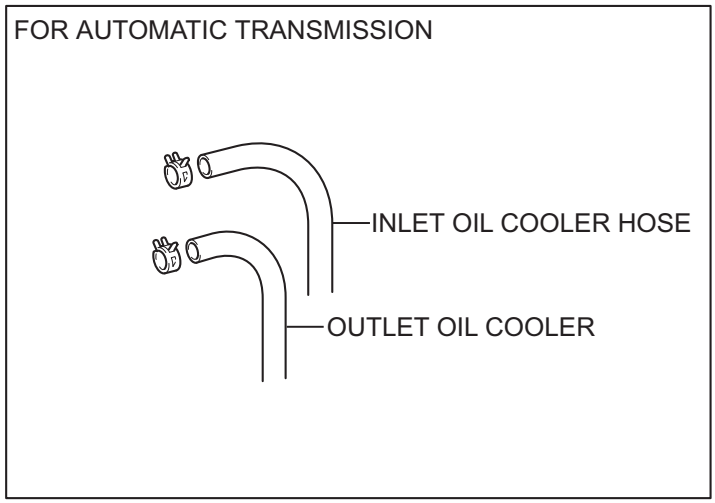

N*m (kgf*cm, ft*lbf) : Specified torque

Y

A129976E01

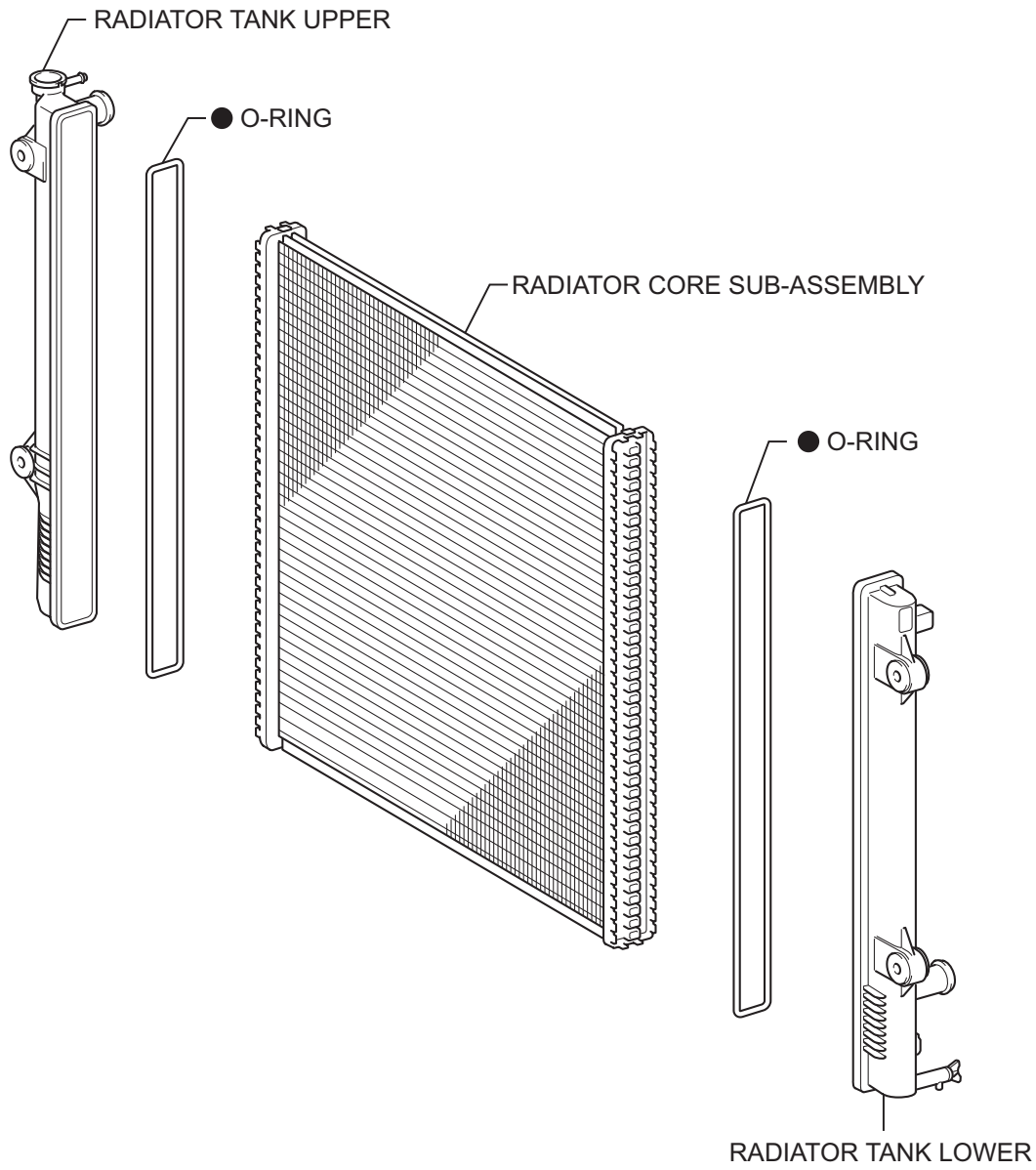

● Non-reusable part

Y

A129877E01

CO

ON-VEHICLE INSPECTION

1. INSPECT RADIATOR CAP SUB-ASSEMBLY

(a) Measure the valve opening pressure.

(1) If there are water stains or foreign matter on rubber packings 1, 2 or 3, clean the parts with water and finger scouring.

(2) Check that rubber packings 1, 2 or 3, is not deformed, cracked or swollen.

(3) Check that rubber packings 3 and 4 are not stuck together.

(4) Apply engine coolant to rubber packings 2 and 3 before using the radiator cap tester.

(5) When using the cap tester, tilt it to more than 30 degrees.

(6) Pump the cap tester several times, and check the maximum pressure *1.

Pumping speed:

1 pump per second.

*1: Even if the cap cannot maintain the maximum pressure. it is not a defect.

Judgement criteria

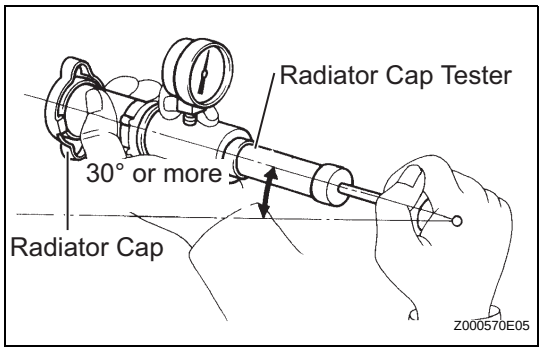

Item	Specified Condition
Standard value (for brand new cap)	93 to 123 kPa (0.95 to 1.25 kgf*cm^2, 13.5 to 17.8 psi)
Minimum standard value (after using cap)	78 kPa (0.8 kgf*cm^{2}11.4 psi)

If the maximum pressure is less than the specified pressure for the minimum standard value, replace the radiator cap sub-assembly.

ON-VEHICLE CLEANING

1. CHECK FIN FOR BLOCKAGE

(a) If the fins are clogged, wash them with water or a steam cleaner, then dry them with compressed air.

NOTICE:

- **If the steam cleaner is too close to the core, there is a possibility of damaging the fins, so keep to the following injection distances.**

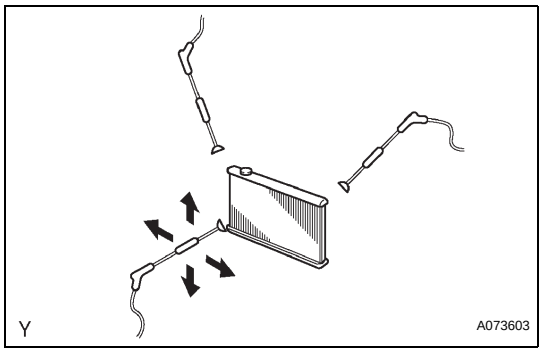

Injection Pressure kPa (kgf*cm^2, psi)	Injection Distance mm (in.)
2,942 to 4,903 (30 to 50, 427 to 711)	300 (11.811)
4,903 to 7,845 (50 to 80, 711 to 1,138)	500 (19.685)

- **If the fins are bent, straighten them with a screwdriver or pliers.**
- **Do not expose electronic components to water.**

REMOVAL

1. **DISCONNECT CABLE FROM NEGATIVE BATTERY TERMINAL**
2. **REMOVE V-BANK COVER (See page ES-428)**
3. **REMOVE NO. 1 ENGINE UNDER COVER SUB-ASSEMBLY (See page EM-6)**
4. **DRAIN ENGINE COOLANT (See page CO-3)**
5. **REMOVE RADIATOR SUPPORT SEAL UPPER**
   (a) Disengage the 7 clips, then remove the radiator support seal.

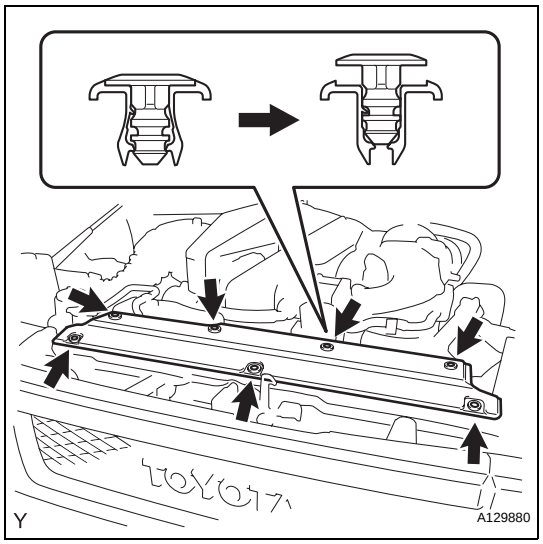

6. **REMOVE FAN SHROUD**
   (a) Disconnect the hose from the radiator.

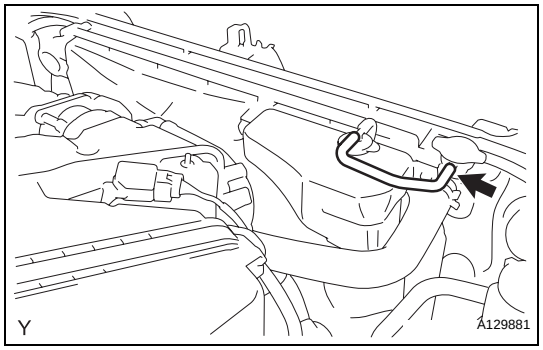

   (b) Loosen the 4 nuts from the fan pulley.
   (c) Remove the fan and generator V belt. (See pageEM-6)
   (d) Remove the 4 nuts and the fluid coupling assembly with fan.
   (e) Remove the bolt from the reserve tank.

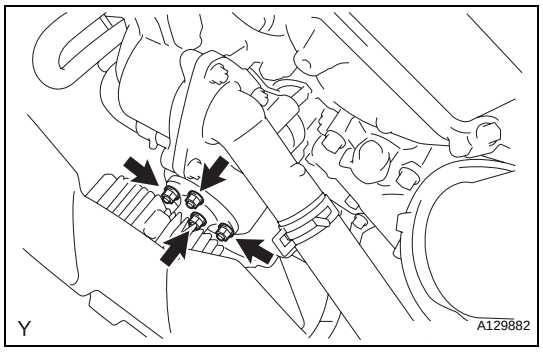

CO

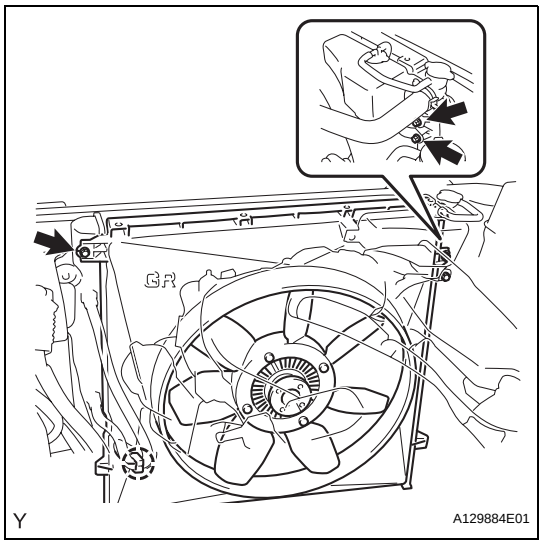

(f) Remove the 2 bolts from the fan shroud.
(g) Remove the fluid coupling assembly with fan and fan shroud.
(h) Remove the fan pulley.

7. REMOVE RADIATOR GRILLE (See page ET-4)

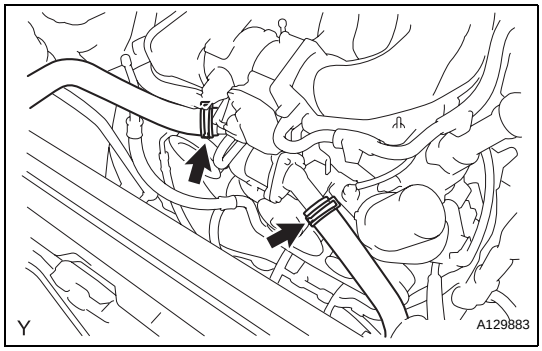

8. REMOVE RADIATOR ASSEMBLY

(a) Disconnect the 2 radiator hoses.

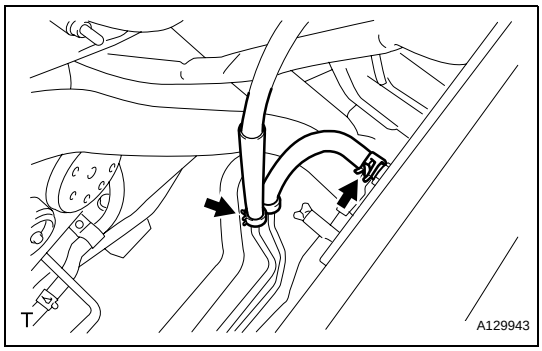

(b) Disconnect the 2 oil cooler hoses (w/ automatic transmission).

CO

(c) Remove the 4 bolts, then remove the radiator.

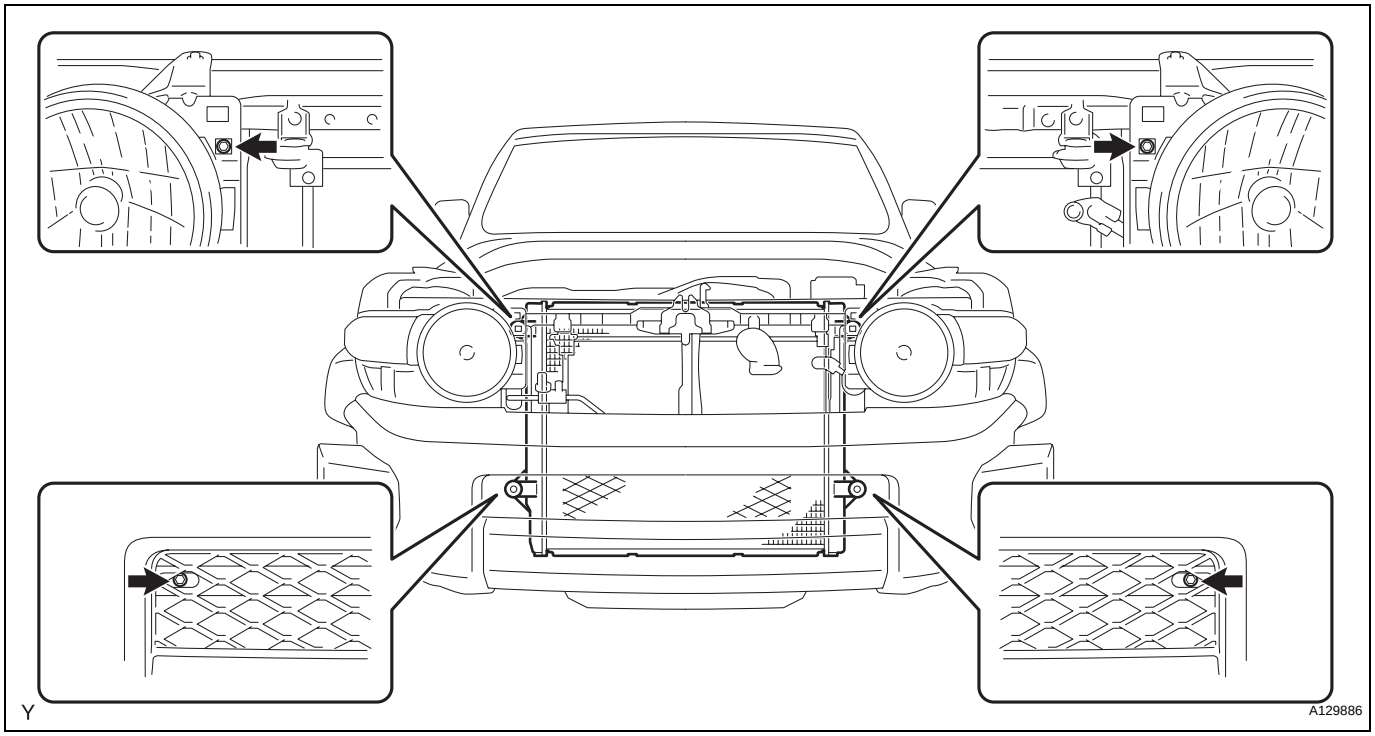

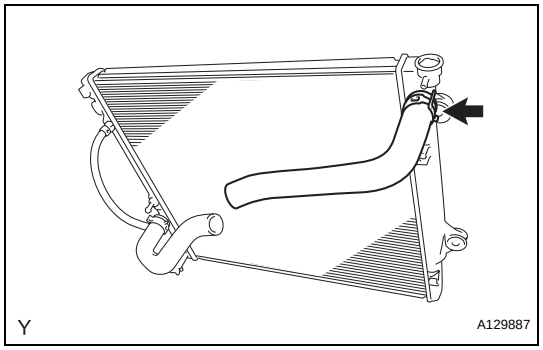

9. REMOVE RADIATOR HOSE INLET

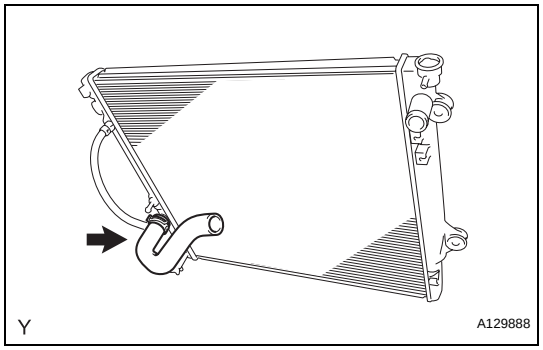

10. REMOVE NO. 2 RADIATOR HOSE

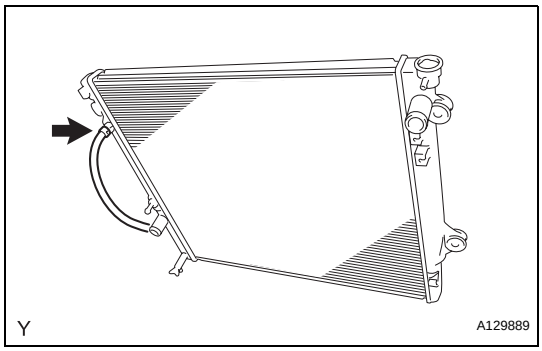

11. REMOVE OIL COOLER HOSE

DISASSEMBLY

1. REMOVE RADIATOR DRAIN COCK PLUG

(a) Remove the drain cock plug.

(b) Remove the O-ring from the drain cock plug.

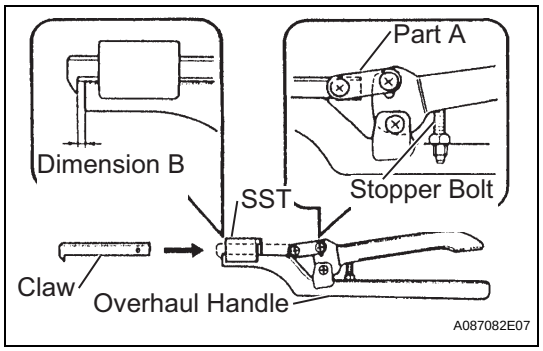

2. ASSEMBLE SST

SST 09230-01010 (09231-01010, 09231-01030)

(a) Engage the claw with the overhaul handle by inserting it into the hole in part A as shown in the illustration.

(b) While gripping the handle, adjust dimension B to between 0.2 and 0.3 mm, using the stopper bolt.

Dimension B:

0.2 to 0.3 mm (0.008 to 0.012 in)

NOTICE:

If the stopper bolt can not be adjusted, the claw may be damaged.

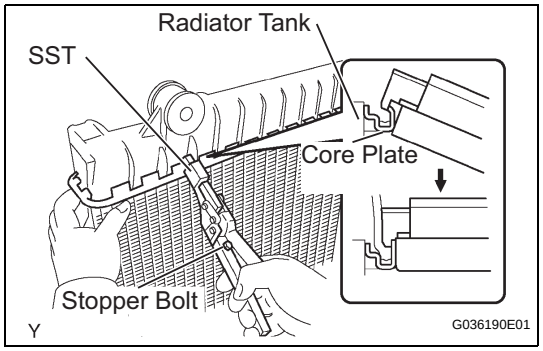

3. UNCAULK CORE PLATE

(a) Straighten the core plate by gripping it with SST until stopped by the stopper bolt.

SST 09230-01010 (09231-01010, 09231-01030)

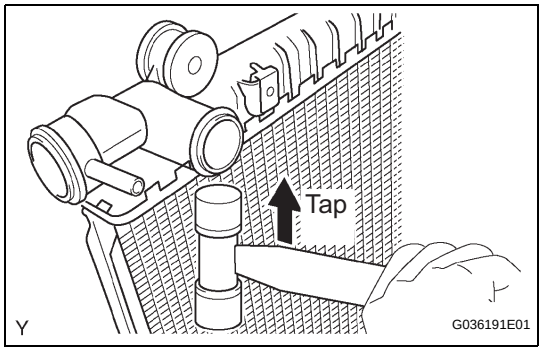

4. REMOVE RADIATOR TANK UPPER

(a) Lightly tap the radiator tank bracket (or radiator tank pipe) with a soft-faced hammer to remove the radiator tank.

5. REMOVE RADIATOR TANK LOWER

HINT:

Perform the same procedures as for the radiator tank upper.

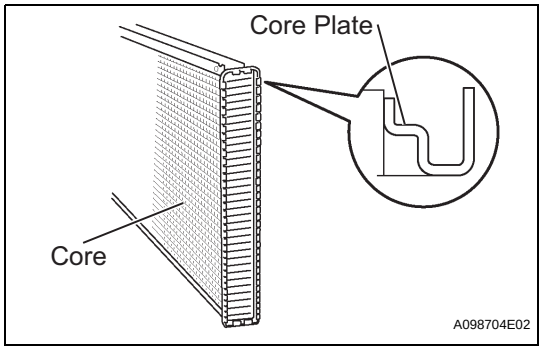

INSPECTION

1. INSPECT RADIATOR CORE SUB-ASSEMBLY

Check the core plate for damage.

HINT:

- If the sides of the core plate groove are deformed, it is impossible to reassemble the radiator tank. Therefore, first correct any deformation using pliers or a similar tool.
- Water leakage will occur if the bottom of the core plate groove is damaged or dented. Repair or replace the core plate if necessary.

NOTICE:

The radiator can only be recaulked twice. After being recaulked twice, the radiator assembly must be replaced.

CO

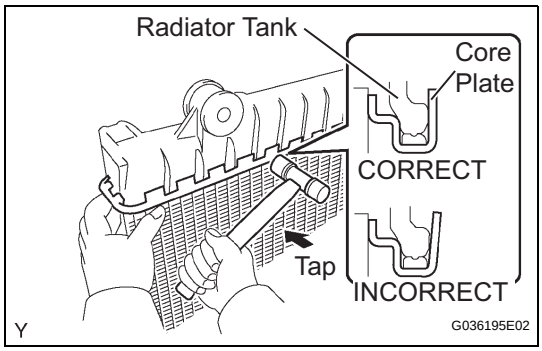

REASSEMBLY

1. INSTALL RADIATOR TANK UPPER

(a) Install a new radiator tank.

(b) Tap the core plate with a soft-faced hammer until there is no gap between the core plate and radiator tank.

2. REMOVE RADIATOR TANK LOWER

HINT:

Perform the same procedures as for the radiator tank upper.

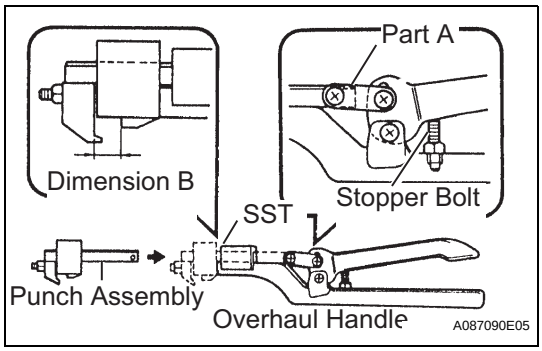

3. ASSEMBLE SST

SST 09230-01010 (09231-01010, 09231-01020)

(a) Install the punch assembly into the overhaul handle by inserting it into the hole in part A as shown in the illustration.

(b) While gripping the handle, adjust the stopper bolt so that dimension B is as shown in the illustration.

Dimension B:

8.4 mm (0.331 in.)

4. CAULK CORE PLATE

(a) Lightly press SST against the core plate in the order shown in the illustration. After repeating this a few times, fully caulk the core plate by gripping the handle until stopped by the stopper bolt.

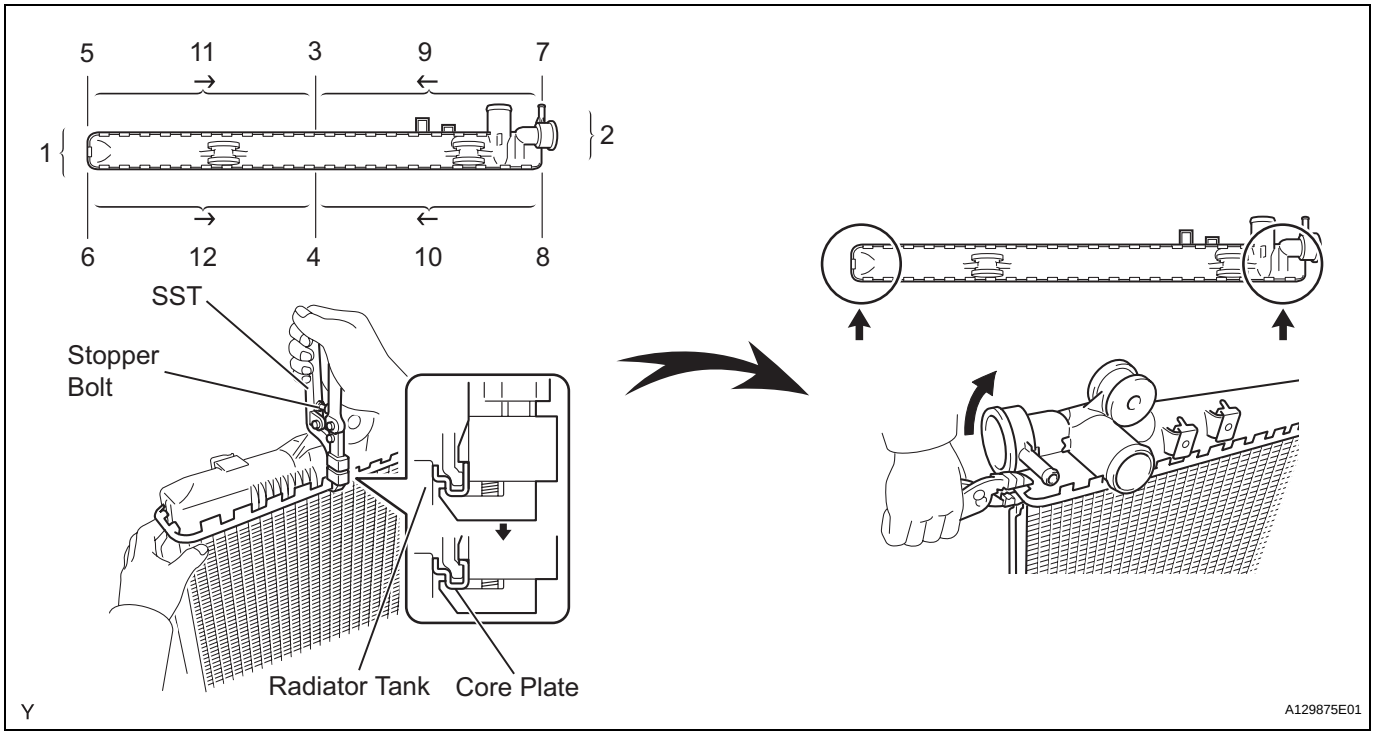

SST 09230-01010 (09231-01010, 09231-01020)

HINT:

Do not tap the portions indicated in the illustration or the oil cooler using SST. Use pliers or a similar tool. Do not damage the core plate.

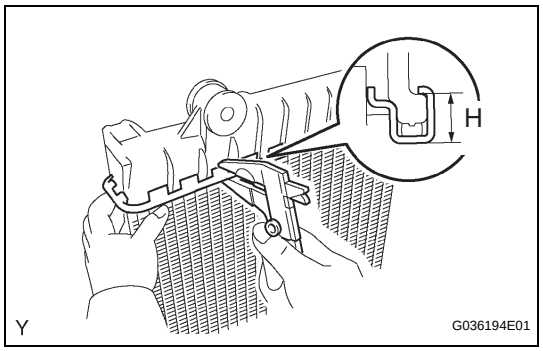

(b) Check the core plate height (H) after completing the caulking.
Plate height (H):
8.7 to 9.1 mm (0.343 to 0.358 in.)
If the height is not as specified, readjust the stopper bolt of the handle, then caulk it again.

5. INSTALL RADIATOR DRAIN COCK PLUG
(a) Install a new O-ring onto the drain cock plug.
(b) Install the drain cock plug.

INSTALLATION

1. INSTALL RADIATOR HOSE INLET

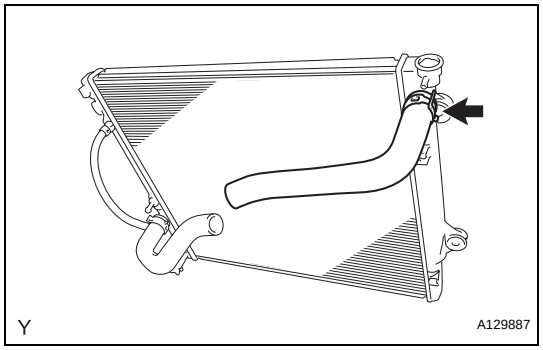

2. INSTALL RADIATOR HOSE NO. 2

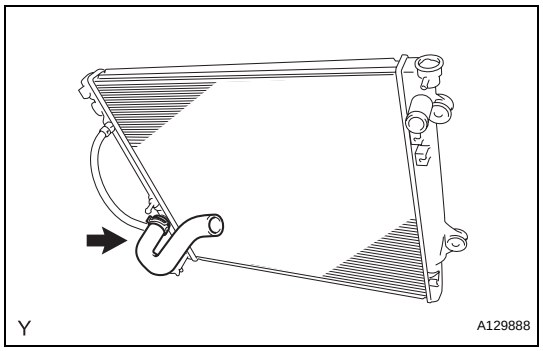

3. INSTALL OIL COOLER HOSE

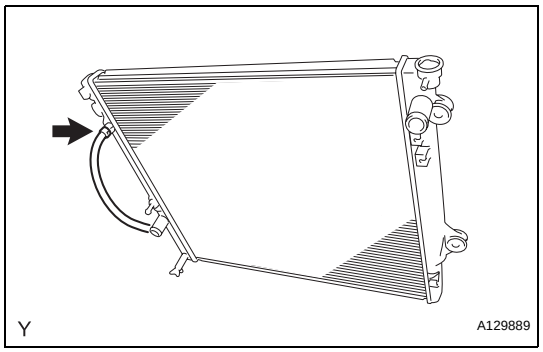

4. INSTALL RADIATOR ASSEMBLY
(a) Install the radiator with the 4 bolts.
Torque: 21 N*m (214 kgf*cm, 44 ft.*lbf)

CO

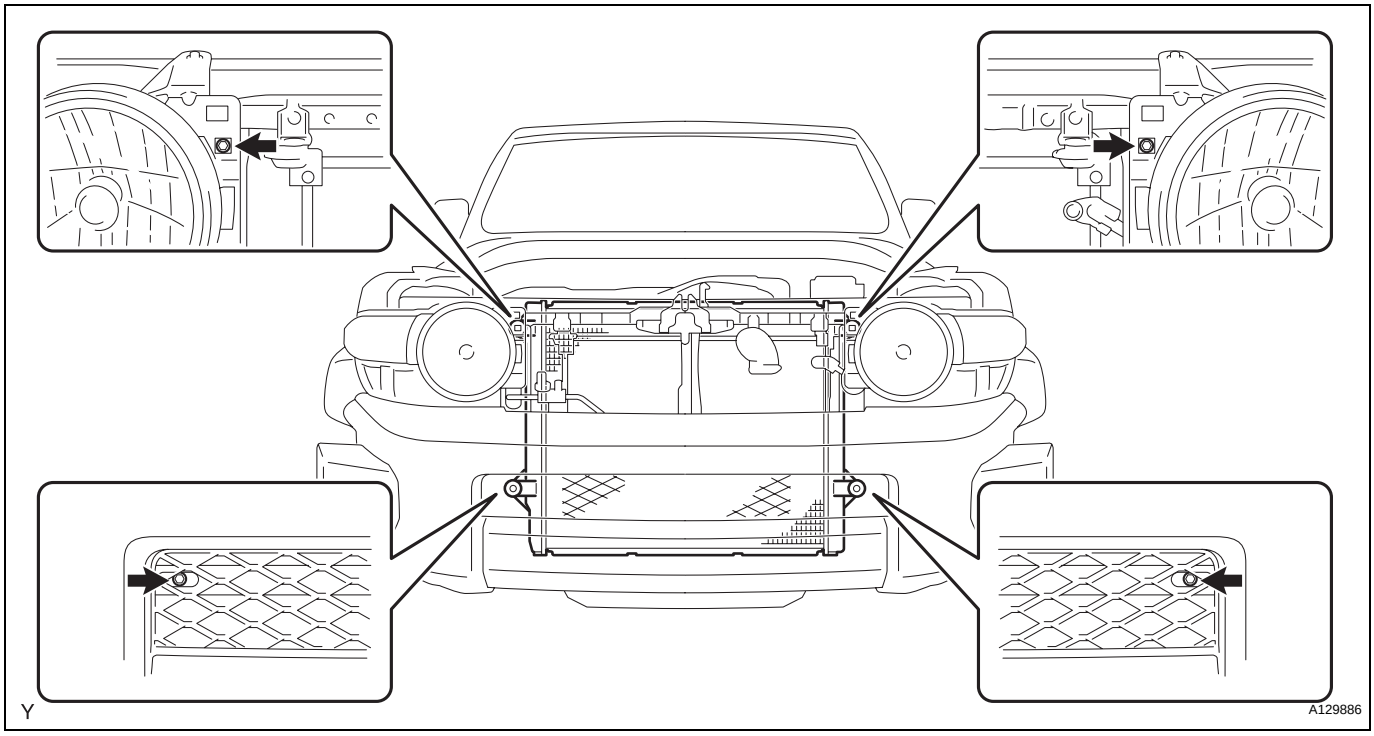

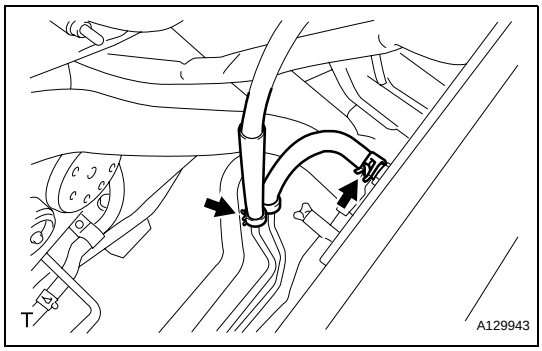

(b) Connect the 2 oil cooler hoses (w/ automatic transmission).

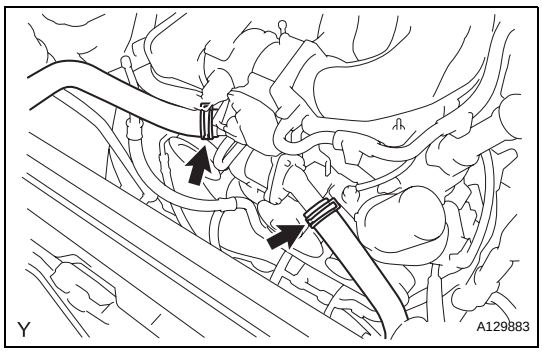

(c) Install the 2 radiator hoses.

5. INSTALL RADIATOR GRILLE (See page ET-11)

6. INSTALL FAN SHROUD

(a) Temporarily install the fan shroud together with the fluid coupling assembly with fan.

(b) Temporarily install the fluid coupling assembly with fan with the 4 nuts.

(c) Install the fan and generator V belt. (See pageEM-6)

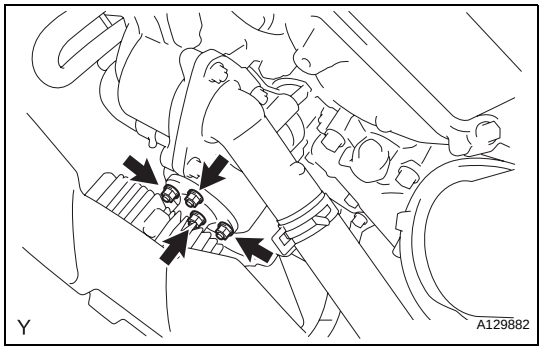

(d) Install the fan pulley with the 4 nuts.
Torque: 21 N*m (214 kgf*cm, 44 in.*lbf)

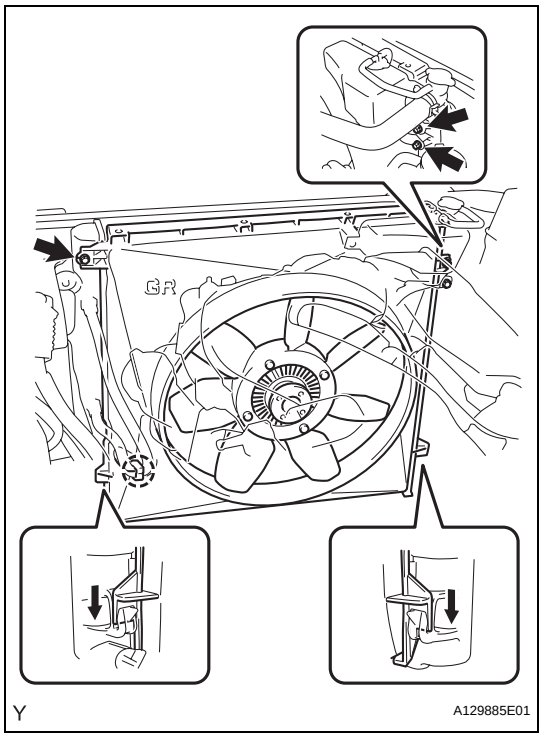

(e) Install the bolt to the reserve tank.
Torque: 5.0 N*m (51 kgf*cm, 44 in.*lbf)
(f) Install the fan shroud with the 2 bolts.
Torque: 5.0 N*m (51 kgf*cm, 44 in.*lbf)
(g) Install the bolt to the reserve tank.
Torque: 5.0 N*m (51 kgf*cm, 44 in.*lbf)
(h) Connect the 2 oil cooler hoses with the 2 clamps (w/ automatic transmission).

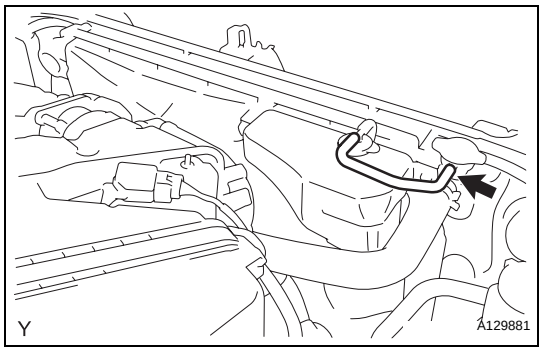

(i) Connect the hose to the radiator reserve tank.

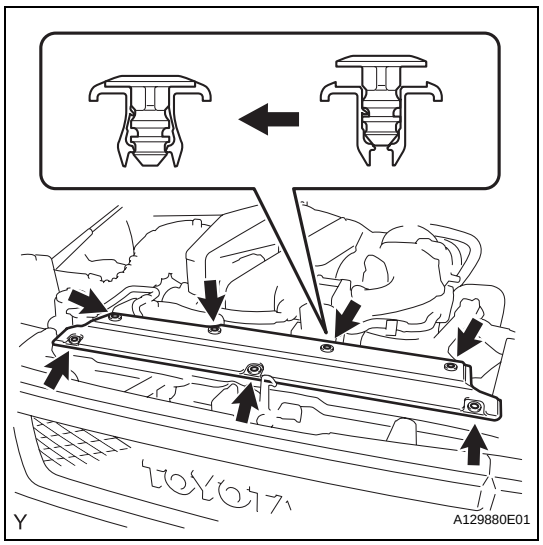

7. INSTALL RADIATOR SUPPORT SEAL UPPER
(a) Engage the 7 clips, then install the radiator support seal.

8. CONNECT CABLE TO NEGATIVE BATTERY TERMINAL
Torque: 3.9 N*m (40 kgf*cm, 35 in.*lbf)

9. ADD ENGINE COOLANT (See page CO-3)

10. CHECK ENGINE COOLANT LEAKAGE (See page CO-2)

11. INSTALL NO. 1 ENGINE UNDER COVER SUB-ASSEMBLY (See page EM-7)

12. INSTALL V-BANK COVER (See page ES-431)

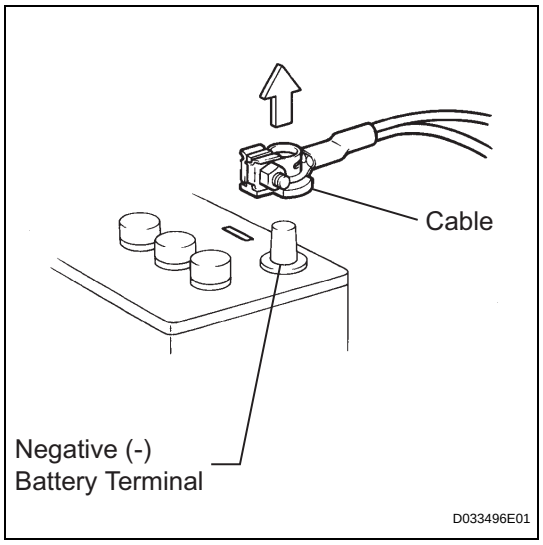

CRUISE CONTROL SYSTEM

PRECAUTION

1. DISCONNECT AND RECONNECT CABLE OF NEGATIVE BATTERY TERMINAL

(a) Before performing electronic work, disconnect the cable from the negative (-) battery terminal in order to prevent it from shorting and burning out.

(b) Before disconnecting and reconnecting the battery cable, turn the ignition switch OFF and the headlight dimmer switch OFF. Then loosen the terminal nut completely. Do not damage the cable or terminal.

(c) When the battery cable is disconnected, the clock and radio settings and stored DTCs are erased. Therefore, before disconnecting the battery cable, make a notes of them.

NOTICE:

When the cable is disconnected from the negative (-) battery terminal, initialize the following system(s) after the cable is reconnected.

CC

System name	See procedure
METER / GAUGE SYSTEM	ME-10

2. HANDLING PRECAUTION FOR CRUISE CONTROL SYSTEM

(a) Turn the cruise control main switch off when not using the cruise control system.

(b) Be careful as the vehicle speed increases when driving downhill with the cruise control system on.

(c) The + (ACCEL)/RES (RESUME) operation changes according to the cruise control system status. When the cruise control system is operating, the + (ACCEL) function operates. When the cruise control system is not operating, the RES (RESUME) function operates.

(d) If the CRUISE main indicator light blinks while the cruise control system is operating, turn the cruise control main switch off to reset the cruise control system. After the reset, if the cruise control main switch cannot be turned on, or the cruise control system is canceled immediately after turning the cruise control main switch on, the system may have a malfunction.

(e) Do not use the cruise control system where the road conditions are as follows:

- Heavy traffic
- Steep decline
- Roads with sharp turns
- Icy or snowy roads
- Slippery roads

PARTS LOCATION

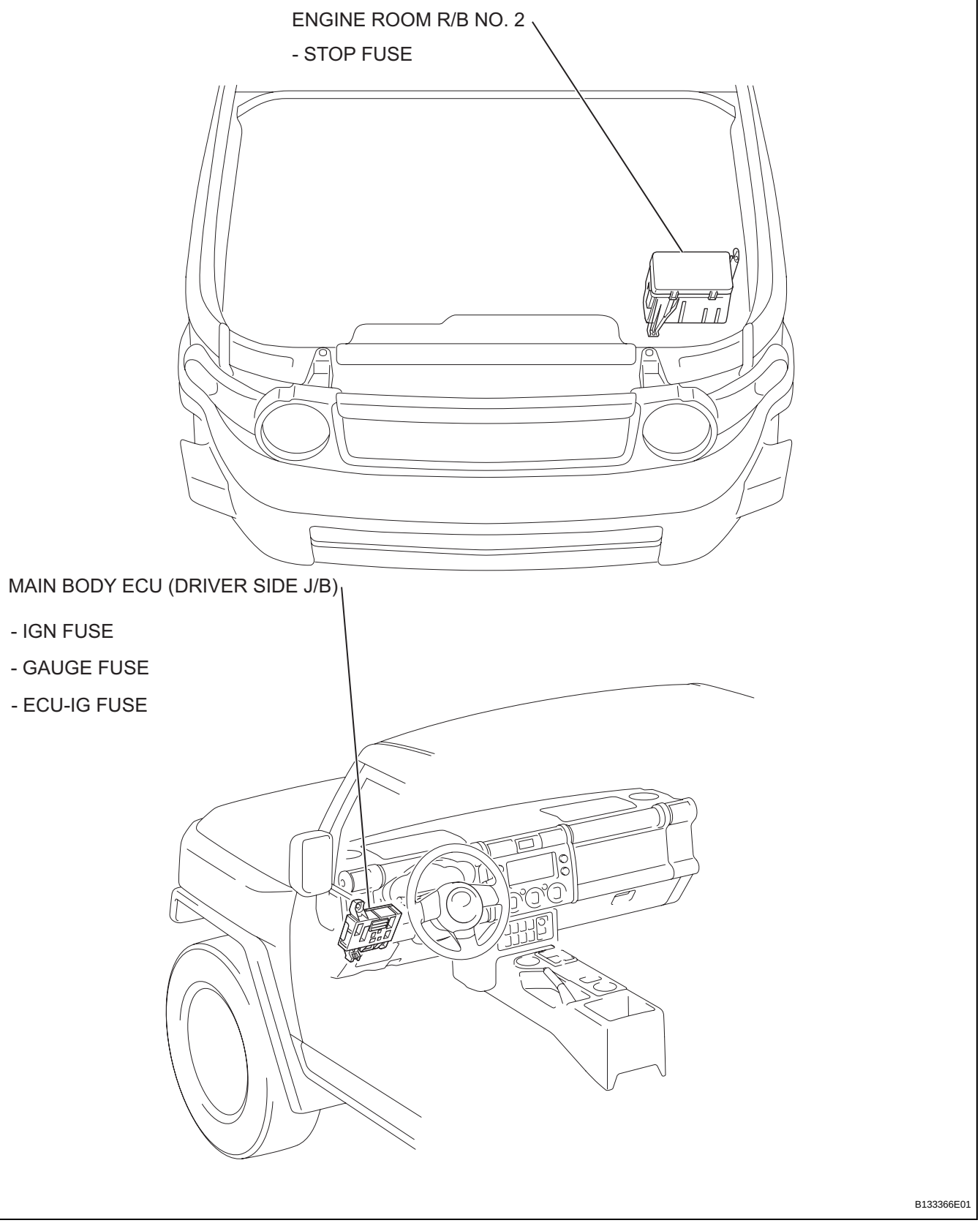

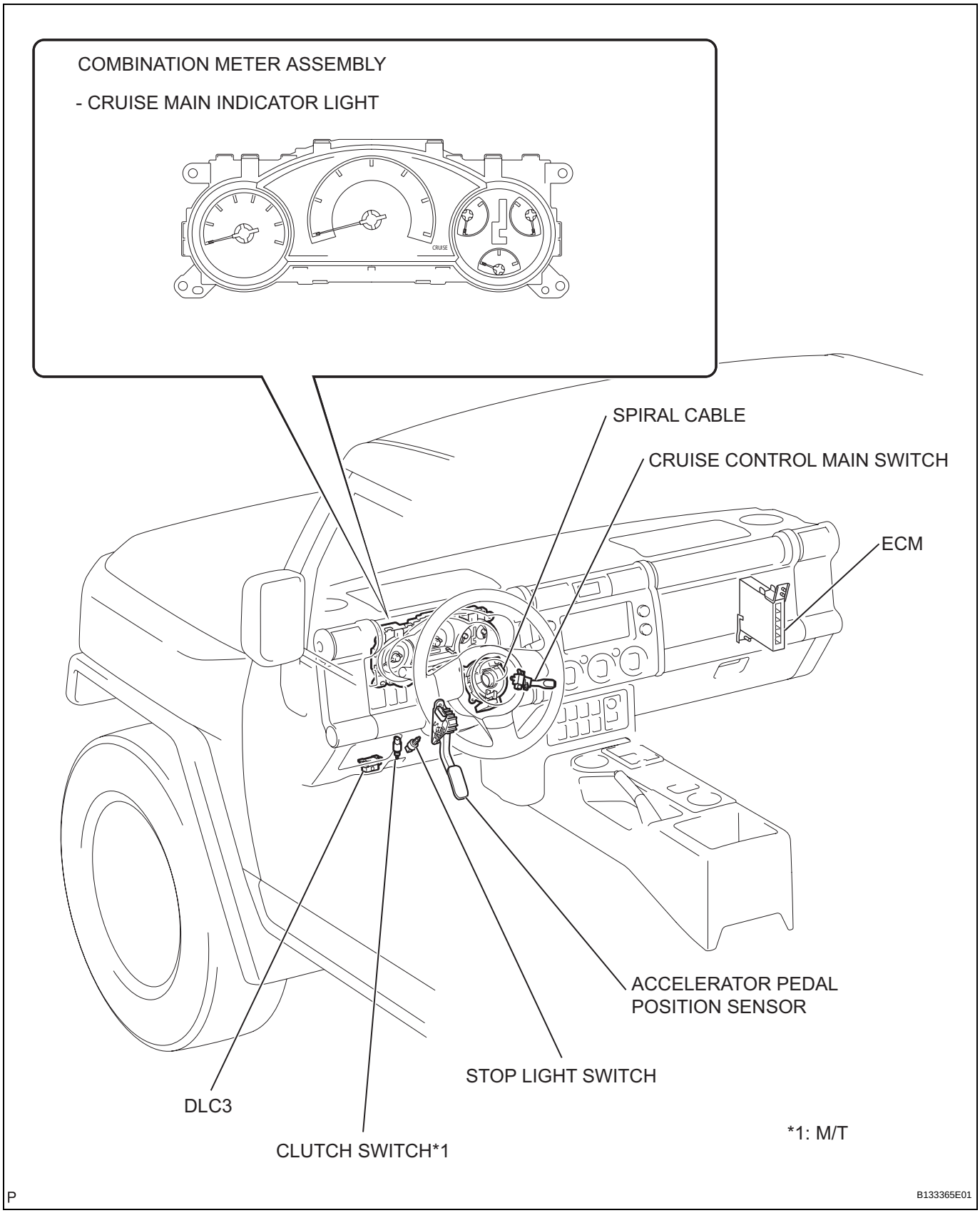
COMBINATION METER ASSEMBLY
- CRUISE MAIN INDICATOR LIGHT
SPIRAL CABLE
CRUISE CONTROL MAIN SWITCH
ECM
ACCELERATOR PEDAL POSITION SENSOR
STOP LIGHT SWITCH
DLC3
CLUTCH SWITCH*1
*1: M/T
P
B133365E01

CC

SYSTEM DIAGRAM

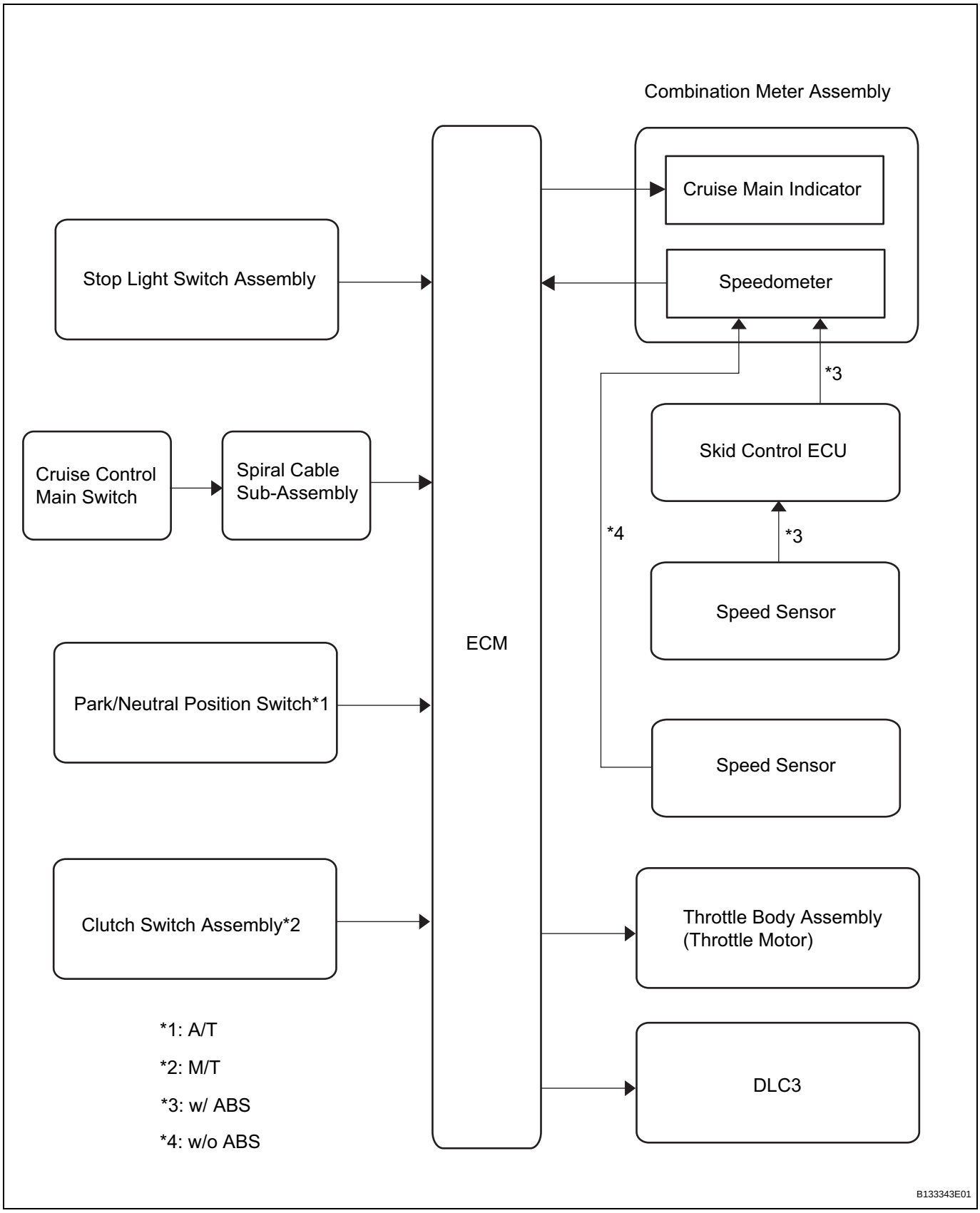

CC

SYSTEM DESCRIPTION

1. CRUISE CONTROL SYSTEM

The cruise control system makes it possible to drive at a desired speed without using the accelerator pedal. The ECM controls the throttle opening angle based on signals from switches and sensors.

The microcomputer which controls the cruise control system is built into the ECM, and uses is the throttle position sensor and motor as the actuator.

Constant speed control gets ready when the cruise control main switch ON-OFF button is pushed (the CRUISE MAIN indicator light comes on).

By operating the cruise control main switch, the driver can control the following functions.

HINT:

- The cruise control main switch is an automatic return type switch which operates only while it is pushed in each allow direction and turns off when it is released.
- "SET" and "-", "RES" and "+", "ON" and "OFF" operations are all controlled by using the same switch.

(a) 'SET' function

When the cruise control main switch is pushed down to "-/SET", the ECM stores the set speed and compares it with the actual vehicle speed. If the actual driving speed is greater than the set speed, the ECM sends a signal to the throttle position sensor and motor to close the throttle valve. If lower, it opens the throttle valve. The cruise control operative speed range is between the low and high speed limits.

(b) '+' function

The cruise set speed increases while the cruise control main switch lever is pushed up to "+/RES". The vehicle begins to cruise at the newly set speed when the cruise control main switch lever is released.

(c) Tap-up function

When the cruise control main switch lever is tapped up to "+/RES" (approximately 0.6 seconds), the ECM increases the stored set speed by 1 mph (1.6 km/h) at a time. However, when the difference between the driving and the stored vehicle speeds is more than 3.1 mph (approximately 5 km/h), the stored vehicle speed will not change.

(d) '-' function

The cruise set speed decreases while the cruise control main switch lever is pushed down to "-/SET". The vehicle begins to cruise at the newly set speed when the cruise control main switch lever is released.

(e) Tap-down function
When the cruise control main switch lever is tapped down to "-/SET" (approximately 0.6 seconds), the ECM decreases the stored set speed by 1 mph (1.6 km/h) at a time. However, when the difference between the driving and the stored vehicle speeds is more than 3.1 mph (approximately 5 km/h), the vehicle speed, when the cruise control main switch lever is released from "-/SET", will be stored and constant speed control is maintained.

(f) Low speed limit
The lowest possible limit of the speed setting range is approximately 25 mph (40 km/h). The cruise control system cannot be set when the vehicle speed is below that low speed limit. Cruise control operation is automatically canceled when the vehicle speed decreases to below the low speed limit while the cruise control is in operation.

(g) High speed limit
The highest possible limit of the speed setting range is approximately 125 mph (200 km/h). The cruise control system cannot be set when the vehicle speed is over the high speed limit. The speed cannot be increased using "+/RES" with the cruise control main switch assembly to beyond the high speed limit.

(h) 'RES' function
If the cruise control operation was canceled under the manual cancel condition (other than by turning cruise control main switch ON-OFF button off), and if the driving speed is within the limit range, pushing the cruise control main switch to "+/RES" restores the vehicle speed stored at the time of cancellation, and maintains constant speed control. Even when cruise control is canceled automatically due to the vehicle speed decreasing below the low speed limit, cruise control can be resumed when the vehicle speed returns to over the low speed limit, since the stored vehicle speed remains in the memory.

(i) MANUAL CANCEL function
The ECM cancels the cruise control while driving under the following conditions:
- The cruise control main switch is pulled to "CANCEL".
- The brake pedal is depressed.
- The clutch pedal is depressed (M/T only).
- The cruise control main switch ON-OFF button is pushed off.
- The D position circuit in the neutral start switch is turned from ON to OFF. The gear is shifted from the D or 4th position to any of the N, 3rd, 2nd or 1st positions (A/T only).

(j) AUTO CANCEL function

(1) When any of the following malfunctions occurs, the ECM clears the set vehicle speed and deactivates the cruise control.
In this case, the power indicator continues blinking until the cruise control main switch is turned OFF and the ECM allows the cruise control to be reactivated when the main switch is next turned ON again.
- Open or short malfunctions in the stop light switch.
- Abnormalities in the vehicle speed signal.
- Malfunctions in the throttle body.

(2) When any of the following malfunctions occurs, the ECM clears the set vehicle speed and deactivates the cruise control.
In this case, the power indicator continues blinking until the cruise control main switch is turned OFF and the ECM allows the cruise control to be reactivated when the ignition switch is next turned ON again.
- Malfunctions in the stop light switch input circuit.
- Malfunctions in the cancel circuit.

(3) When the vehicle is in one of the following conditions, the ECM deactivates the cruise control (the cruise control can be reset).
- Actual vehicle speed is below the lower vehicle speed limit (the set vehicle speed is retained).
- Actual vehicle speed decreases by 10 mph (16 km/h) from the set vehicle speed (the set vehicle speed is cleared).

HOW TO PROCEED WITH TROUBLESHOOTING

HINT:

- Use the following procedures to troubleshoot the cruise control system.
- *: Use the intelligent tester.

1	VEHICLE BROUGHT TO WORKSHOP

NEXT

2	PROBLEM SYMPTOM CONFIRMATION

NEXT

CC

3	CHECK CAN COMMUNICATION SYSTEM*

Refer to the PRECAUTION (See page CA-1).

(a) Check for output DTCs.

Result

Result	Proceed to
CAN DTC is not output	A
CAN DTC is output	B

HINT:

The ECM of this system is connected to the CAN communication system. Therefore, before starting troubleshooting, be sure to check that there is no trouble in the CAN communication system.

B → PROCEED TO CAN COMMUNICATION SYSTEM

A

4	DTC CHECK AND CLEAR*

Refer to the DTC CHECK / CLEAR (See page CC-15).

NEXT

5	DTC CHECK (OTHER THAN CAN SYSTEM DTC)*

Result

Result	Proceed to
DTC is not output	A
DTC is output	B

A → GO TO STEP 7

B

6	DTC CHART

Refer to the DIAGNOSTIC TROUBLE CODE CHART (See page CC-16).

NEXT

GO TO STEP 10

7	PROBLEM SYMPTOM CONFIRMATION

Result

Result	Proceed to
Symptom occurs	A
Symptom does not occur	B

A → GO TO STEP 9

B

8	SYMPTOM SIMULATION

Refer to the ELECTRONIC CIRCUIT INSPECTION PROCEDURE (See page IN-44).

NEXT

9	PROBLEM SYMPTOMS TABLE

Refer to the PROBLEM SYMPTOMS TABLE (See page CC-11).

NEXT

10	CIRCUIT INSPECTION

NEXT

11	TERMINALS OF ECM

Refer to TERMINALS OF ECM (See page CC-12).

NEXT

12	IDENTIFICATION OF PROBLEM

NEXT

13	REPAIR OR REPLACE

NEXT

14	CONFIRMATION TEST

NEXT

END

CC

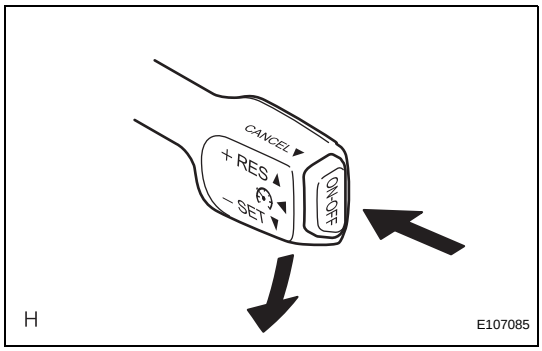

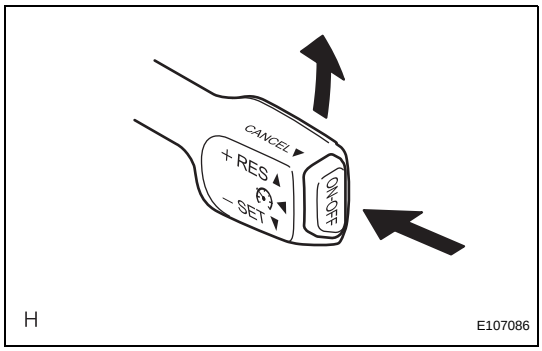

ROAD TEST

1. PROBLEM SYMPTOM CONFIRMATION

(a) Inspect the SET function.
  (1) Turn the cruise control main switch on.
  (2) Drive at the required speed between 25 mph (40 km/h) and 125 mph (200 km/h).
  (3) Push the cruise control main switch to - (COAST)/SET.
  (4) After releasing the switch, check that the vehicle cruises at the set speed.

(b) Inspect the ACCELERATION function.
  (1) Turn the cruise control main switch on.
  (2) Drive at the required speed between 25 mph (40 km/h) and 125 mph (200 km/h).
  (3) Push the cruise control main switch to - (COAST)/SET.
  (4) Check that the vehicle speed increases while the cruise control main switch is pushed to + (ACCEL)/RES (RESUME), and that the vehicle cruises at the newly set speed when the switch is released.
  (5) Push the cruise control main switch to + (ACCEL)/RES (RESUME) and then release it immediately. Check that the vehicle speed increases by approximately 1.0 mph (1.6 km/h) (tap-up control).

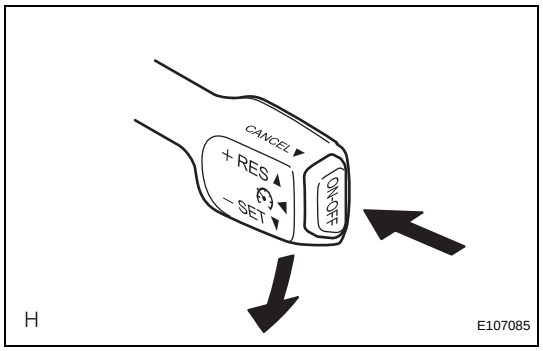

(c) Inspect the - (COAST) function.
(1) Turn the cruise control main switch on.
(2) Drive at the required speed between 25 mph (40 km/h) and 125 mph (200 km/h).
(3) Push the cruise control main switch to - (COAST)/SET.
(4) Check that the vehicle speed decreases while the cruise control main switch is pushed to - (COAST)/SET, and the vehicle cruises at the newly set speed when the switch is released.
(5) Push the cruise control main switch to - (COAST)/SET, and then release it immediately. Check that the vehicle speed decreases by approximately 1.0 mph (1.6 km/h) (tap-down control).

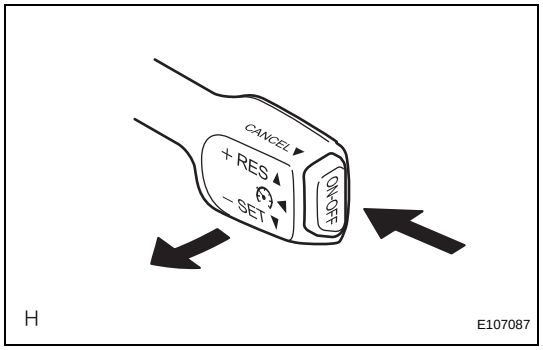

(d) Inspect the CANCEL function.
(1) Turn the cruise control main switch on.
(2) Drive at the required speed between 25 mph (40 km/h) and 125 mph (200 km/h).
(3) Push the cruise control main switch to - (COAST)/SET.
(4) When performing any one of the following, check that the cruise control system is canceled and that the normal driving mode is reset.
- Depressing the brake pedal
- Depressing the clutch pedal (M/T only)
- The shift lever is moved from the D or 4th position to any of the N, 3rd , 2nd , or L positions (A/T only)
- Turning the cruise control main switch off
- Pulling the cruise control main switch to CANCEL

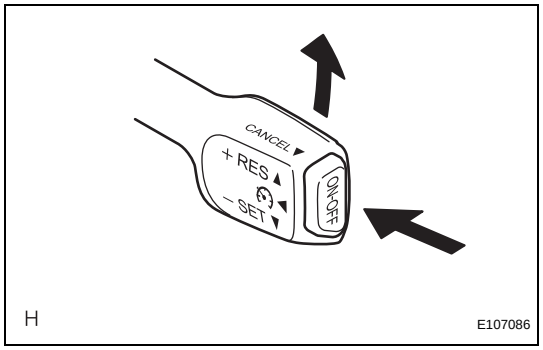

(e) Inspect the RES (RESUME) function.
(1) Turn the cruise control main switch on.
(2) Drive at the required speed between 25 mph (40 km/h) and 125 mph (200 km/h).
(3) Push the cruise control main switch to - (COAST)/SET.
(4) Cancel the cruise control system by performing any of the above operations (other than turning the main switch off).
(5) After pushing the cruise control main switch to + (ACCEL)/RES (RESUME) at a driving speed of more than 25 mph (40 km/h), check that the vehicle resumes the speed set prior to the cancellation.

CC

PROBLEM SYMPTOMS TABLE

HINT:
Use the table below to help determine the causes of the problem symptom. The potential cases of the symptoms are listed in order of probability in the "Suspected Area" column of the table. Check each symptom by checking the suspected areas in the order they are listed. Replace parts as necessary.

Cruise Control System

Symptom	Suspected area	See page
Main switch cannot be turned ON (Indicator light on the combination meter does not come on)	Cruise control switch circuit	CC-26
	CRUISE MAIN indicator light circuit	CC-31
	Harness and connector	-
	ECM	-
Desired speed cannot be set (Indicator light on the combination meter comes on when the main switch is turned ON, but goes off when operating the "SET" function)	Cruise control switch circuit	CC-26
	ECM	-
Desired speed cannot be set (Indicator light on the combination comes on when the main switch is turned ON and it remains ON, while operating the "SET" function)	Cruise control switch circuit	CC-26
	Stop light switch circuit	CC-19
	Clutch switch circuit (M/T)	CC-23
	Park/neutral position switch circuit (A/T)	-
	Combination meter system	CC-31
	Speed sensor circuit	CC-18
	ECM	-
While cruise control driving, the set speed is canceled (Indicator light remains ON)	Cruise control switch circuit	CC-26
	Speed sensor circuit	CC-18
	Stop light switch circuit	CC-19
	Combination meter system	CC-31
	Clutch switch circuit (M/T)	CC-23
	Park/neutral position switch circuit (A/T)	-
	ECM	-
Hunting occurs (Speed is not constant)	Speed sensor circuit	CC-18
	ECM	-
Speed setting cannot be canceled ("CANCEL" function failure only)	Cruise control switch circuit	CC-26
	ECM	-
DTC is not output, or is output when should not be	DLC3 circuit	CC-33
	ECM	-
Cruise control cannot be canceled when vehicle speed decreases to below low speed limit	Speed sensor circuit	CC-18
	ECM	-
Cruise control cannot be canceled when brake pedal is depressed	Stop light switch circuit	CC-19
	ECM	-
Cruise control cannot be canceled when shift lever is operated (A/T)	Park/neutral position switch circuit	-
	ECM	-
Cruise control cannot be canceled when clutch pedal is depressed (M/T)	Clutch switch circuit	CC-23
	ECM	-

TERMINALS OF ECM

1. CHECK ECM

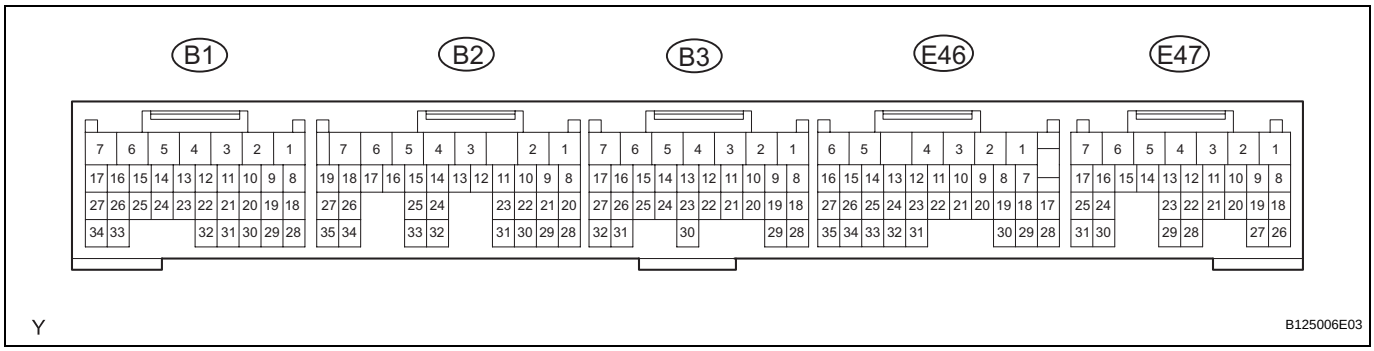

(a) Measure the voltages of the wire harness side connectors.

Standard voltage:

Symbols (Terminals No.)	Wiring Color	Terminal Description	Condition	Specified Condition
TC (E47-23) - E1 (B3-1)	P-L - BR	DTC output signal	Ignition switch ON	11 to 14 V
TC (E47-23) - E1 (B3-1)	P-L - BR	DTC output signal	Ignition switch ON Connect terminals TC and CG of DLC3	Below 2 V
ST1- (E47-16) - E1 (B3-1)	R-L - BR	Cruise cancel input signal	Ignition switch ON Depress brake pedal	Below 1 V
ST1- (E47-16) - E1 (B3-1)	R-L - BR	Cruise cancel input signal	Ignition switch ON Release brake pedal	11 to 14 V
STP (E47-15) - E1 (B3-1)	G-Y - BR	Stop light switch input signal	Ignition switch ON Depress brake pedal	11 to 14 V
STP (E47-15) - E1 (B3-1)	G-Y - BR	Stop light switch input signal	Ignition switch ON Release brake pedal	Below 1 V
CCS (E46-2) - E1 (B3-1)	L-B - BR	Cruise control main switch output signal	Ignition switch ON	11 to 14 V
CCS (E46-2) - E1 (B3-1)	L-B - BR	Cruise control main switch output signal	Ignition switch ON CANCEL switch held ON	6.6 to 10.1 V
CCS (E46-2) - E1 (B3-1)	L-B - BR	Cruise control main switch output signal	Ignition switch ON -/SET switch held ON	4.5 to 7.1 V
CCS (E46-2) - E1 (B3-1)	L-B - BR	Cruise control main switch output signal	Ignition switch ON +/RES switch held ON	2.3 to 4.5 V
CCS (E46-2) - E1 (B3-1)	L-B - BR	Cruise control main switch output signal	Ignition switch ON MAIN switch held ON	Below 1 V
E1 (B3-1) - Body ground	BR - Body ground	Ground	Always	Below 1 V
PI (E46-18) - E1 (B3-1)	P-G - BR	Cruise main indicator light input signal	Ignition switch ON Cruise control main switch held ON	0 to 3 V
PI (E46-18) - E1 (B3-1)	P-G - BR	Cruise main indicator light input signal	Ignition switch ON Cruise control main switch held OFF	11 to 14 V
D (E46-21) - E1 (B3-1)	L-B - BR	Clutch switch input signal	Ignition switch ON Depress clutch pedal	Below 1 V
D (E46-21) - E1 (B3-1)	L-B - BR	Clutch switch input signal	Ignition switch ON Release clutch pedal	11 to 14 V

If the result is not as specified, there may be a malfunction on the wire harness side.

CC

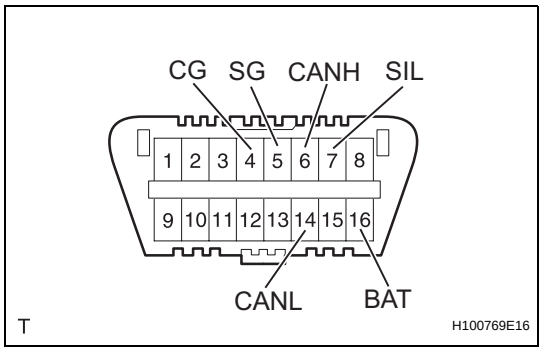

DIAGNOSIS SYSTEM

1. CHECK DLC3

(a) The ECU uses ISO 15765-4 for communication. The terminal arrangement of the DLC3 complies with SAE J1962 and matches the ISO 15765-4 format.

Symbols (Terminal No.)	Terminal Description	Condition	Specified Condition
SIL (7) - SG (5)	Bus " +" line	During transmission	Pulse generation
CG (4) - Body ground	Chassis ground	Always	Below 1 Ω
SG (5) - Body ground	Signal ground	Always	Below 1 Ω
BAT (16) - Body ground	Battery positive	Always	11 to 14 V
CANH (6) - CANL (14)	CAN bus line	Ignition switch OFF*	54 to 69 Ω
CANH (6) - CG (4)	HIGH-level CAN bus line	Ignition switch OFF*	200 Ω or higher
CANL (14) - CG (4)	LOW-level CAN bus line	Ignition switch OFF*	200 Ω or higher
CANH (6) - BAT (16)	HIGH-level CAN bus line	Ignition switch OFF*	6 kΩ or higher
CANL (14) - BAT (16)	LOW-level CAN bus line	Ignition switch OFF*	6 kΩ or higher

CC

NOTICE:

***: Before measuring the resistance, leave the vehicle as is for at least 1 minute and do not operate the ignition switch, any other switches or the doors.**

If the result is not as specified, the DLC3 may have a malfunction. Repair or replace the harness and connector.

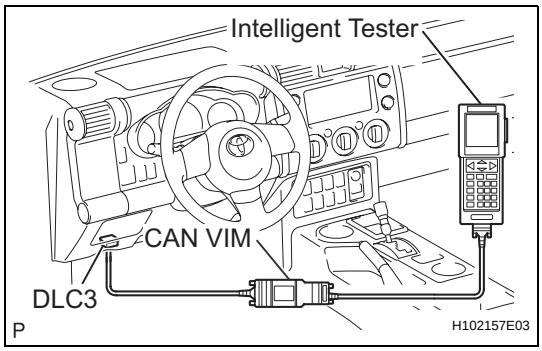

HINT:

Connect the cable of the intelligent tester to the CAN VIM, connect the CAN VIM to the DLC3, turn the ignition switch ON and attempt to use the tester. If the display indicates that a communication error has occurred, there is a problem either with the vehicle or with the tester.

- If communication is normal when the tester is connected to another vehicle, inspect the DLC3 of the original vehicle.
- If communication is still not possible when the tester is connected to another vehicle, the problem is probably in the tester itself. Consult the Service Department listed in the tester's instruction manual.

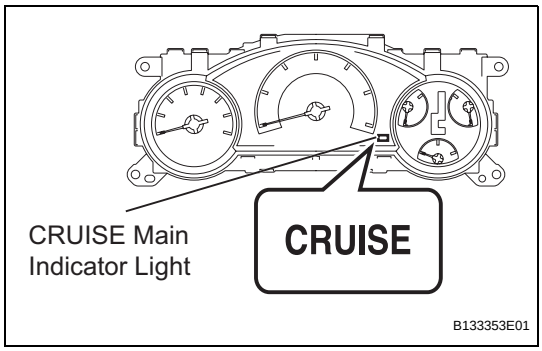

2. CHECK INDICATOR

(a) Turn the ignition switch to the ON position.

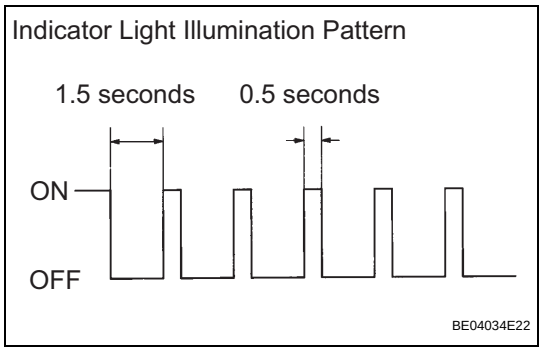

(b) Check that the CRUISE MAIN indicator light comes on when the cruise control main switch ON-OFF button is pushed on, and that the indicator light goes off when the ON-OFF button is pushed off.
HINT:
If there is a problem with the ON/OFF illumination of the indicator light, inspect the cruise main indicator light circuit (See page CC-31).
HINT:
If a malfunction occurs in the vehicle speed sensor, stop light switch assembly or other related parts during cruise control driving, the ECM actuates AUTO CANCEL of the cruise control. Then the CRUISE MAIN indicator light starts to blink, to inform the driver of the malfunction. At the same time, data of the malfunction is stored as a diagnostic trouble code (DTC).

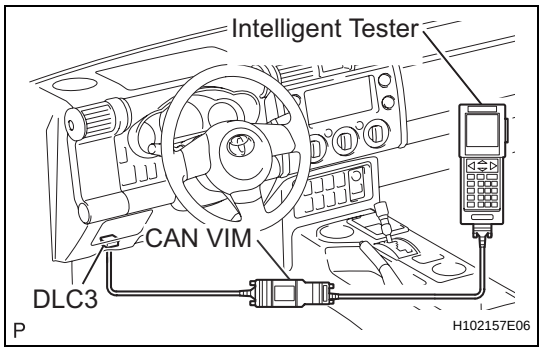

DTC CHECK / CLEAR

1. DTC CHECK

(a) Check for DTCs.
(1) Connect the intelligent tester to the DLC3.
(2) Turn the ignition switch on.
(3) Check the DTCs by following the prompts on the tester screen.
HINT:
Refer to the intelligent tester operator's manual for further details.

(b) Clear DTCs.
(1) Connect the intelligent tester to the DLC3.
(2) Turn the ignition switch on.
(3) Clear the DTCs by following the prompts on the tester screen.
HINT:
Refer to the intelligent tester operator's manual for further details.

FAIL-SAFE CHART

HINT:
If the following conditions are detected while the cruise control is in operation, the system clears the stored vehicle speed in the ECM and cancels the cruise control operation.

Vehicle Condition	Auto Cancel Condition	Re-operation Condition
CRUISE main indicator light blinks	• There is open or short in stop light switch circuit • There is problem with vehicle speed signal • There is problem with throttle position sensor and motor	Turn cruise control main switch on again
CRUISE main indicator light blinks	• There is problem with input circuit of stop light switch circuit • There is problem with cancel circuit	• Turn cruise control main switch on again • Turn engine switch off then on again
CRUISE main indicator light remains on (Cruise control is canceled)	• Vehicle speed is lower than low speed limit (approximately 25 mph (40 km/h)) while running with cruise control on	Push cruise control main switch to + (ACCEL)/RES (RESUME)
	• Vehicle speed is lower than stored speed by approximately 10 km/h (16 mph) or more	Push cruise control main switch to - (COAST)/ SET

DATA LIST / ACTIVE TEST

1. READ DATA LIST

(a) While the intelligent tester is connected to the DLC3 with the ignition switch in the ON position, the CRUISE CONTROL data list can be displayed. Follow the prompts on the tester screen to access the data list.

ECM (Cruise Control System)

Item	Measurement Item / Display (Range)	Normal Condition	Diagnostic Note
VEHICLE SPD	Vehicle speed / min.: 0 km/h (0 mph) max.: 255 km/h (158 mph)	Actual vehicle speed	-
MEMORY SPD	Vehicle speed / min.: 0 km/h (0 mph) max.: 255 km/h (158 mph)	Actual vehicle speed stored in memory	-
CCS OPER STATUS	Cruise control / ON or OFF	ON: Cruise control is SET OFF: Cruise control is UNSET	-
CRUISE CONTROL	Cruise control / ON or OFF	ON: Cruise control is SET OFF: Cruise control is UNSET	-
CCS INDICATOR M	Switch indicator (Main CPU) / ON or OFF	ON: Switch indicator (Main CPU) is SET OFF: Switch indicator (Main CPU) is UNSET	-
CCS INDICATOR S	Switch indicator (Sub CPU) / ON or OFF	ON: Switch indicator (Sub CPU) is SET OFF: Switch indicator (Sub CPU) is UNSET	-
CCS READY M	Switch ready (Main CPU) / ON or OFF	ON: Switch ready (Main CPU) is SET OFF: Switch ready (Main CPU) is UNSET	-
CCS READY S	Switch ready (Sub CPU) / ON or OFF	ON: Switch ready (Sub CPU) is SET OFF: Switch ready (Sub CPU) is UNSET	-
MAIN SW (MAIN)	Main switch (Main CPU) / ON or OFF	ON: Main switch (Main CPU) is SET OFF: Main switch (Main CPU) is UNSET	-
MAIN SW (SUB)	Main switch (Sub CPU) / ON or OFF	ON: Main switch (Sub CPU) is SET OFF: Main switch (Sub CPU) is UNSET	-
CANCEL SW	CANCEL switch / ON or OFF	ON: CANCEL switch is SET OFF: CANCEL switch is UNSET	-
SET/COAST SW	- / SET switch / ON or OFF	ON: - / SET switch is SET OFF: - / SET switch is UNSET	-
RES/ACC SW	+ / RES switch / ON or OFF	ON: + / RES switch is SET OFF: + / RES switch is UNSET	-
STP LIGHT SW M	Stop light switch signal (Main CPU) / ON or OFF	ON: Brake pedal depressed OFF: Brake pedal released	-
STP LIGHT SW S1	Stop light switch signal (Sub CPU) / ON or OFF	ON: Brake pedal depressed OFF: Brake pedal released	-
STP LIGHT SW S2	Stop light switch signal (Sub CPU) / ON or OFF	ON: Brake pedal depressed OFF: Brake pedal released	-
SHIFT D POS	Shift D position / ON or OFF (A/T)	ON: Shift is D or 4 position OFF: Shift is except D or 4 position	-
	Clutch switch/ ON or OFF (M/T)	ON: Clutch pedal released OFF: Clutch pedal depressed	-

CC

DIAGNOSTIC TROUBLE CODE CHART

If a trouble code is indicated while checking DTCs, inspect the circuit listed for that code in the table below, and proceed to the applicable page.

Cruise Control System

DTC No.	Detection Item	Trouble Area	See page
P0500	Vehicle Speed Sensor Circuit Malfunction	- Combination meter assembly - Vehicle speed sensor - Vehicle speed sensor signal circuit - ECM	CC-18
P0503	Vehicle Speed Sensor Circuit Malfunction	- Combination meter assembly - Veicle speed sensor - Vehicle speed sensor signal circuit - ECM	CC-18
P0571	Stop Light Switch Circuit Malfunction	- Stop light switch assembly - Stop light switch assembly circuit - ECM	CC-19
P0607	Input Signal Circuit Malfunction	- ECM	CC-22

DTC	P0500	Vehicle Speed Sensor Circuit Malfunction

DTC	P0503	Vehicle Speed Sensor Circuit Malfunction

DESCRIPTION

Refer to DTC P0500 (see page ES-243).

DTC No.	DTC Detection Conditions	Trouble Areas
P0500	This trouble code is output when the vehicle speed signal from the vehicle speed sensor is cut for 0.14 seconds or more while the cruise control is in operation.	• Combination meter assembly • Vehicle speed sensor • Vehicle speed sensor signal circuit • ECM
P0503	Momentary interruption and noise are detected when a rapid change of vehicle speed occurs while the cruise control is in operation.	• Combination meter assembly • Vehicle speed sensor • Vehicle speed sensor signal circuit • ECM

WIRING DIAGRAM

Refer to DTC P0500 (see page ES-245).

INSPECTION PROCEDURE

Refer to DTC P0500 (see page ES-245).

DTC	P0571	Stop Light Switch Circuit Malfunction

DESCRIPTION

The cruise control system cancels cruising when the ECM detects that the brake pedal is depressed during cruise control driving. The stop light switch assembly sends signals to the ECM according to the brake pedal conditions. When the brake pedal is released, terminal ST1- is the positive (+) battery voltage, and terminal STP voltage is below 1 V. While the brake pedal is depressed, terminal ST1- is below 1 V, and STP is positive (+) battery voltage. During braking, the ECM cancels cruise control as one of the manual cancel functions.

The ECM outputs this trouble code when the voltage of terminals ST1- and STP are both below 1 V for 0.5 seconds or more at the same time.

The fail-safe function operates to enable normal driving even if there is a malfunction in the stop light signal circuit.

DTC No.	DTC Detected Conditions	Trouble Areas
P0571	ECM detects a malfunction of the stop light switch circuit under both of the following conditions. • Voltage of terminal STP is below 1 V for 0.5 seconds or more. • Voltage of terminal ST1- is below 1 V for 0.5 seconds or more.	• Stop light switch assembly • Stop light switch assembly circuit • ECM

WIRING DIAGRAM

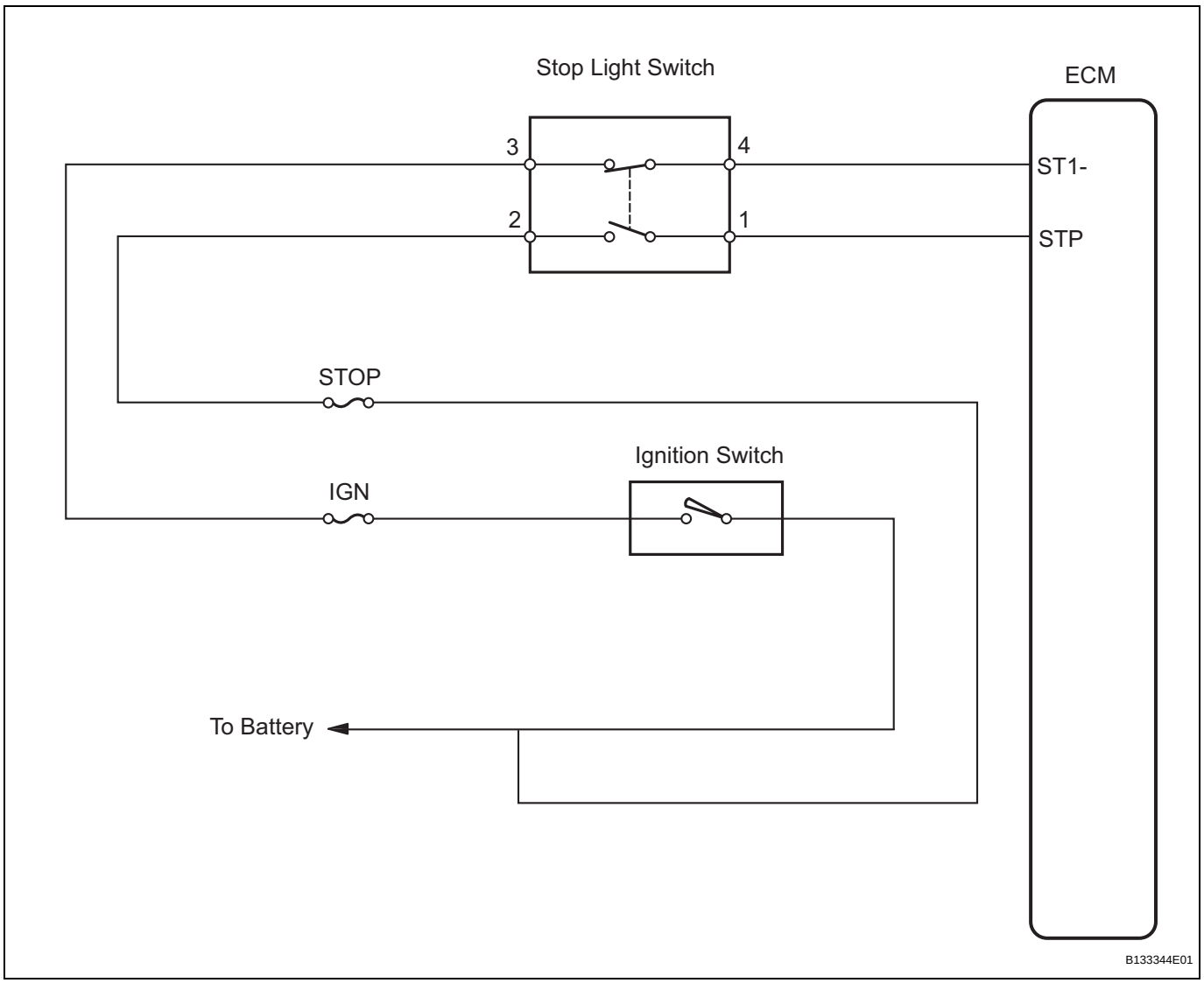

CC

INSPECTION PROCEDURE

1	INSPECT STOP LIGHT SWITCH OPERATION

(a) Check that the stop lights come on while the brake pedal is depressed, and go off when the brake pedal is released.

OK

Brake Pedal Condition	Stop Light Condition
Depressed	ON
Released	OFF

NG → **INSPECT STOP LIGHT SWITCH CIRCUIT**

OK

2 INSPECT STOP LIGHT SWITCH ASSEMBLY

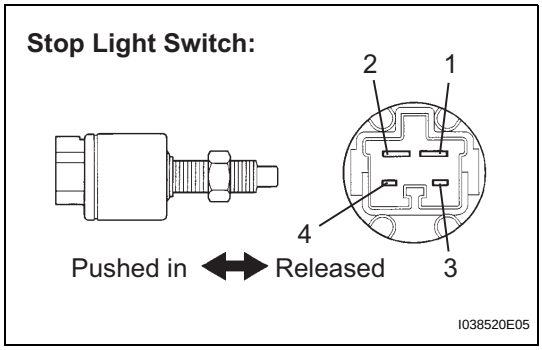

(a) Disconnect the stop light switch assembly connector.
(b) Measure the resistance.

Standard resistance

Tester Connection	Switch Condition	Stop Light Condition
1 - 2	Switch pin free (Brake pedal depressed)	Below 1Ω
3 - 4	Switch pin free (Brake pedal depressed)	10 kΩ or higher
1 - 2	Switch pin pushed in (Brake pedal released)	10 kΩ or higher
3 - 4	Switch pin pushed in (Brake pedal released)	Below 1Ω

(c) Reconnect the stop light switch assembly connector.

NG → **REPLACE STOP LIGHT SWITCH ASSEMBLY**

CC

OK

3 INSPECT ECM (STP SIGNAL)

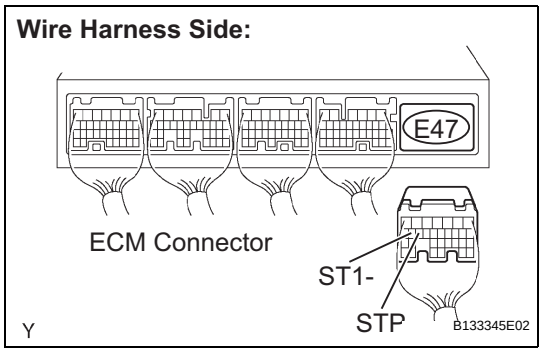

(a) Disconnect the E47 ECM connector.
(b) Turn the ignition switch to the ON position.
(c) Measure the voltage.

Standard voltage

Tester Connection	Brake Pedal Condition	Specified Condition
STP (E47-15) - Body ground	Depressed	11 to 14 V
STP (E47-15) - Body ground	Released	Below 1V
ST1- (E47-16) - Body ground	Depressed	Below 1V
ST1- (E47-16) - Body ground	Released	11 to 14 V

(d) Reconnect the ECM connector.

NG → **REPAIR OR REPLACE HARNESS OR CONNECTOR (STOP LIGHT SWITCH ASSEMBLY - ECM)**

OK

REPLACE ECM

DTC	P0607	Input Signal Circuit Malfunction

DESCRIPTION

This DTC indicates the internal abnormalities of the ECM.

DTC No.	DTC Detection condition	Trouble Area
P0607	The ECM has a supervisory CPU and a control ECU inside. • When each input STP signal is different for 0.15 seconds or more, this trouble code is output. • This trouble code is output after 0.4 seconds has passed from the time the cruise cancel input signal (STP input) is input into the ECM.	ECM

HINT:
When a trouble code is detected, fail-safe continues until the ignition switch is turned off.

INSPECTION PROCEDURE

1	REPLACE ECM

NEXT

END

Clutch Switch Circuit

DESCRIPTION

Clutch switch circuit inspection is necessary for M/T vehicles.
When the clutch pedal is released, the ECM receives the positive (+) battery voltage through the ECU-IG fuse and ignition switch. While the clutch pedal is depressed, the clutch switch assembly sends a signal to terminal D of the ECM. The ECM cancels cruise control when terminal D receives the signal (voltage of below 1 V).

WIRING DIAGRAM

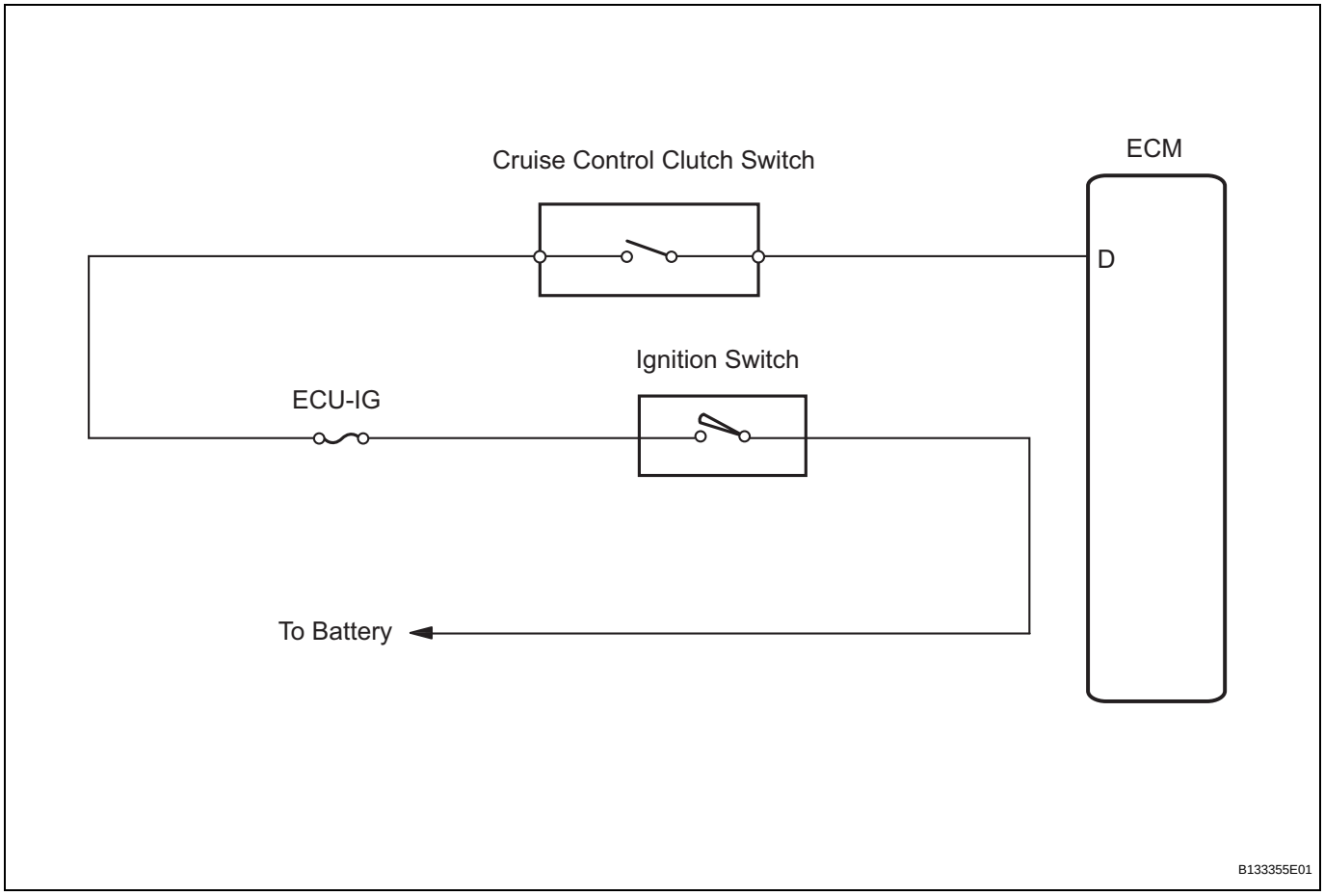

INSPECTION PROCEDURE

1 CHECK HARNESS AND CONNECTOR (ECM - BATTERY)

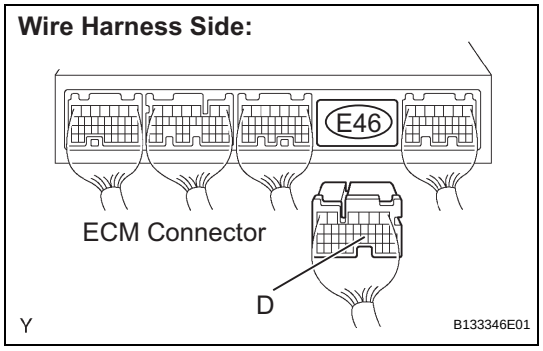

(a) Disconnect the E46 ECM connector.
(b) Turn the ignition switch to the ON position.
(c) Measure the voltage.

Standard voltage

Tester Connection	Clutch Pedal Condition	Specified Condition
D(E46-21) - Body ground	Depressed	Below 1 V
D(E46-21) - Body ground	Released	11 to 14 V

(d) Reconnect the ECM connector.

OK → **PROCEED TO NEXT CIRCUIT INSPECTION SHOWN IN PROBLEM SYMPTOMS TABLE**

NG

2 INSPECT CLUTCH SWITCH ASSEMBLY

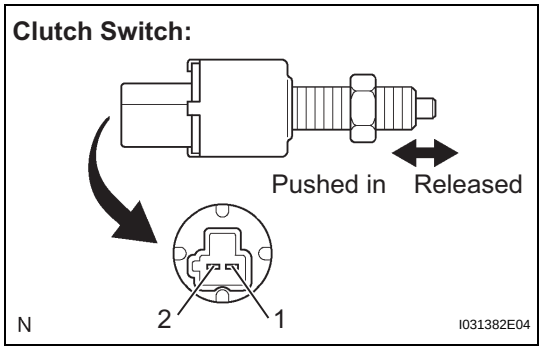

(a) Disconnect the clutch switch connector.
(b) Measure the resistance.

Standard resistance

Tester Connection	Clutch Pedal Condition	Specified Condition
1 - 2	Switch pin free (Clutch pedal depressed)	10 kΩ or higher
1 - 2	Switch pin pushed in (Clutch pedal released)	Below 1 Ω

(c) Reconnect the clutch switch connector.

NG → **REPLACE CLUTCH SWITCH ASSEMBLY**

OK

CC

3	CHECK HARNESS AND CONNECTOR (CLUTCH SWITCH ASSEMBLY - ECM)

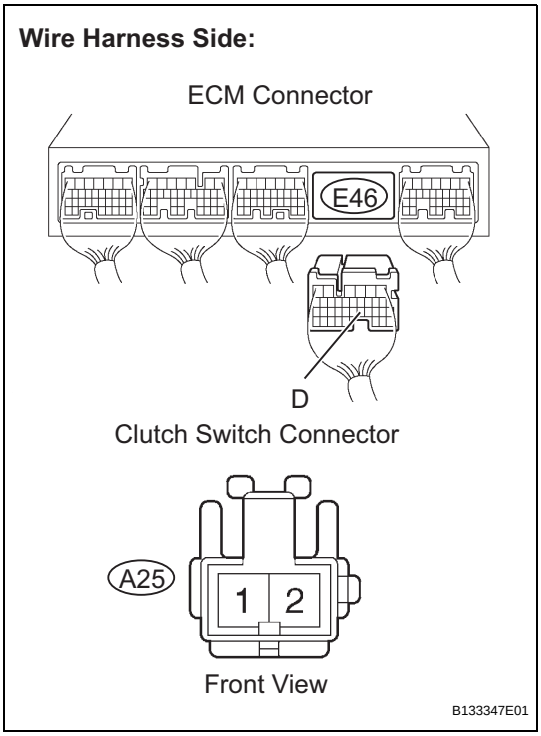

(a) Disconnect the E46 ECM connector.
(b) Disconnect the A25 clutch switch connector.
(c) Measure the resistance.

Standard resistance

Tester Connection	Specified Condition
A25-2 or D (E46-21) - Body ground	10 kΩ or higher
A25-2 - D (E46-21)	Below 1 Ω

(d) Reconnect the clutch switch connector.
(e) Reconnect the ECM connector.

NG → **REPAIR OR REPLACE HARNESS OR CONNECTOR (CLUTCH SWITCH ASSEMBLY - ECM)**

OK

REPAIR OR REPLACE HARNESS OR CONNECTOR (CLUTCH SWITCH ASSEMBLY - BATTERY)

CC

Cruise Control Switch Circuit

DESCRIPTION

The cruise control main switch operates 7 functions: SET, - (COAST), TAP-DOWN, RES (RESUME), + (ACCEL), TAP-UP, and CANCEL. The SET, TAP-DOWN, and - (COAST) functions, and the RES (RESUME), TAP-UP, and + (ACCEL) functions are operated with the same switch. The cruise control main switch is an automatic return type switch which turns on only while operated in the directions of the arrows and turns off when it is released. The internal contact point of the cruise control main switch is turned on with the switch operation. Then the ECM reads the voltage value that has been changed by the switch operation to control SET, - (COAST), RES (RESUME), + (ACCEL), and CANCEL.

WIRING DIAGRAM

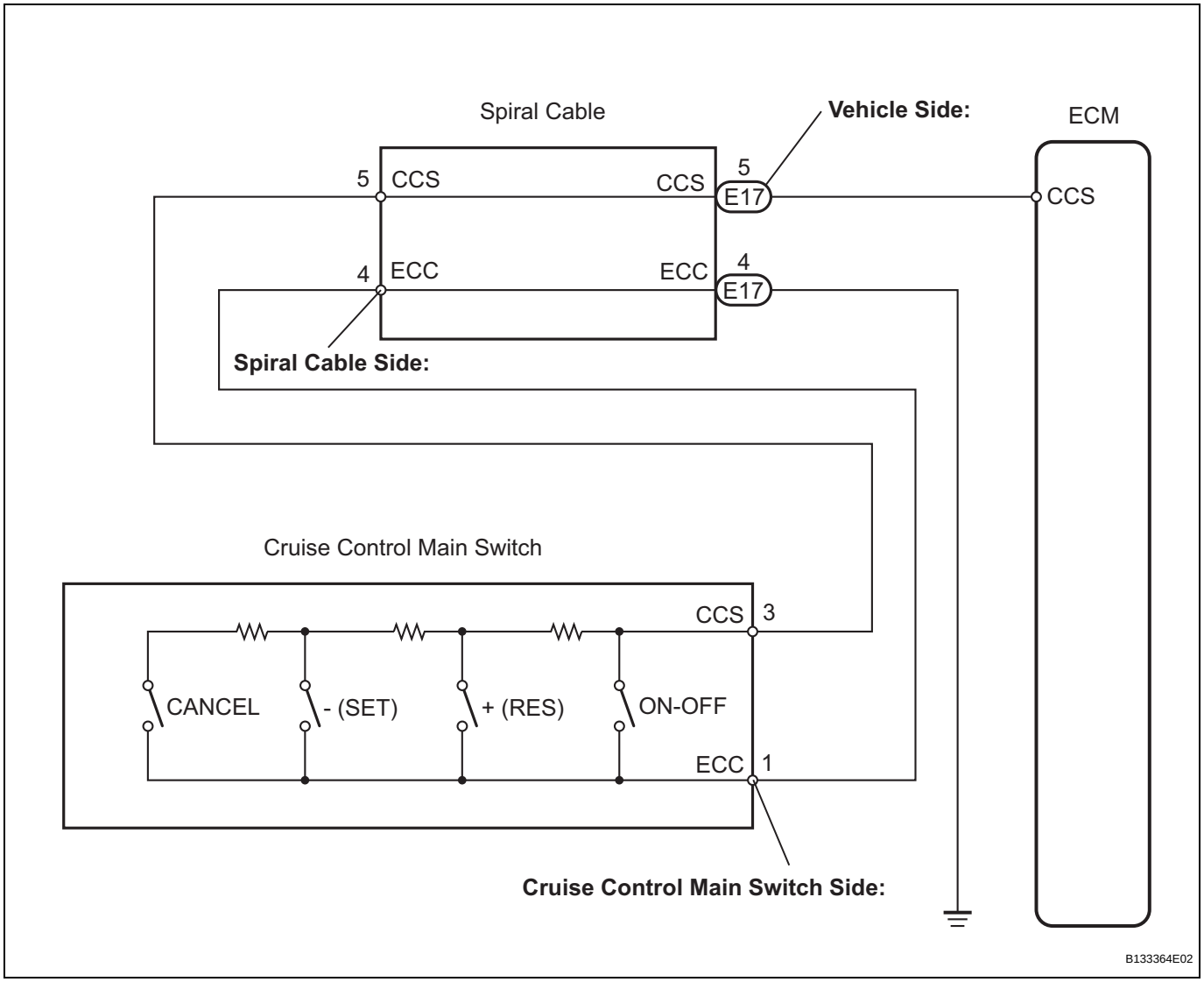

CC

INSPECTION PROCEDURE

1	READ VALUE OF INTELLIGENT TESTER

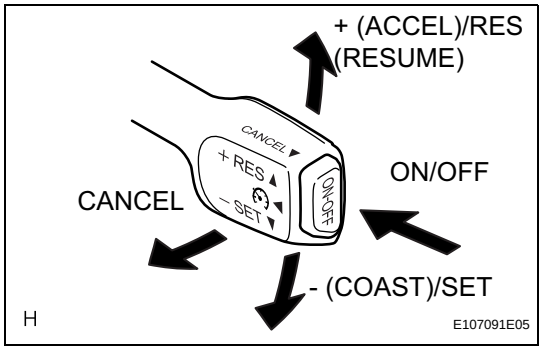

(a) Connect the intelligent tester to the DLC3.
(b) Turn the ignition switch ON and turn the intelligent tester main switch on.
(c) Check the DATA LIST for proper functioning of the cruise control main switch.

ECM (Cruise Control System)

Item	Measurement Item / Display (Range)	Normal Condition	Diagnostic Note
MAIN SW (MAIN)	Main switch (Main CPU) / ON or OFF	ON: Main switch (Main CPU) is ON OFF: Main switch (Main CPU) is OFF	-
MAIN SW (SUB)	Main switch (Sub CPU) / ON or OFF	ON: Main switch (Sub CPU) is ON OFF: Main switch (Sub CPU) is OFF	-
CANCEL SW	CANCEL switch / ON or OFF	ON: CANCEL switch is ON OFF: CANCEL switch is OFF	-
SET/COAST SW	- / SET switch / ON or OFF	ON: - / SET switch is ON OFF: - / SET switch is OFF	-
RES/ACC SW	+ / RES switch / ON or OFF	ON: + / RES switch is ON OFF: + / RES switch is OFF	-

OK:
When the cruise control main switch is operated, the display changes as shown above.

Result:

Result	Proceed to
OK	A
NG (All items are defective)	B
NG (1 to 5 items are defective)	C

A → **PROCEED TO NEXT CIRCUIT INSPECTION SHOWN IN PROBLEM SYMPTOMS TABLE**

C → **REPLACE CRUISE CONTROL MAIN SWITCH**

B

2 INSPECT CRUISE CONTROL MAIN SWITCH

Cruise Control Main Switch:

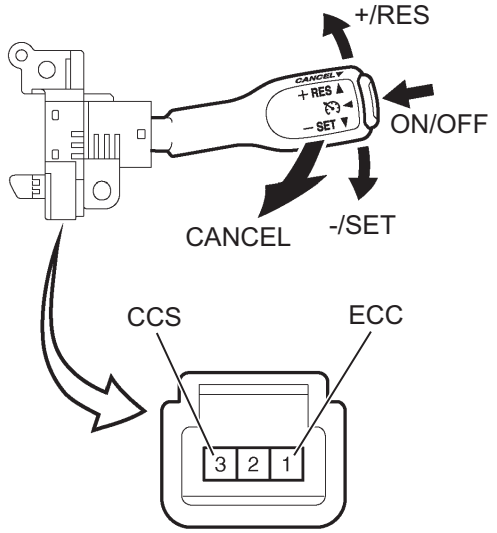

(a) Remove the cruise control main switch.
(b) Measure the resistance.

Standard resistance

Tester Connection	Switch Condition	Specified Condition
1 - 3	cruise control switch neutral	10 kΩ or higher
	cruise control switch ON	Below 1 Ω
	cruise control switch OFF	10 kΩ or higher
	+/RES	216 to 264 Ω
	-/SET	567 to 693 Ω
	CANCEL	1,386 to 1,694 Ω

(c) Reinstall the cruise control main switch.

NG → **REPLACE CRUISE CONTROL MAIN SWITCH**

OK

3 CHECK HARNESS AND CONNECTOR (CRUISE CONTROL MAIN SWITCH - SPIRAL CABLE)

Spiral Cable Side:

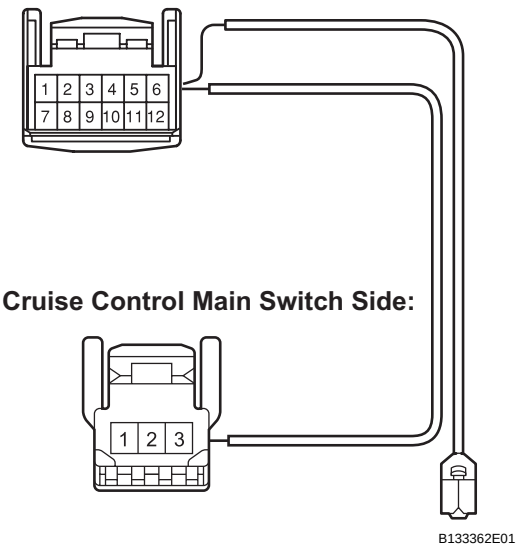

(a) Disconnect the spiral cable side connector.
(b) Disconnect the cruise control main switch side connector.
(c) Measure the resistance.

Standard resistance

Tester Connection	Specified Condition
Terminal 1 (ECC) main switch side - Terminal 4 (ECC) spiral cable side	Below 1 Ω
Terminal 3 (CCS) main switch side - Terminal 5 (CCS) spiral cable side	Below 1 Ω

(d) Reconnect the spiral cable side connector.
(e) Reconnect the cruise control main switch side connector.

NG → **REPAIR OR REPLACE HARNESS OR CONNECTOR**

CC

OK

4 CHECK SPIRAL CABLE

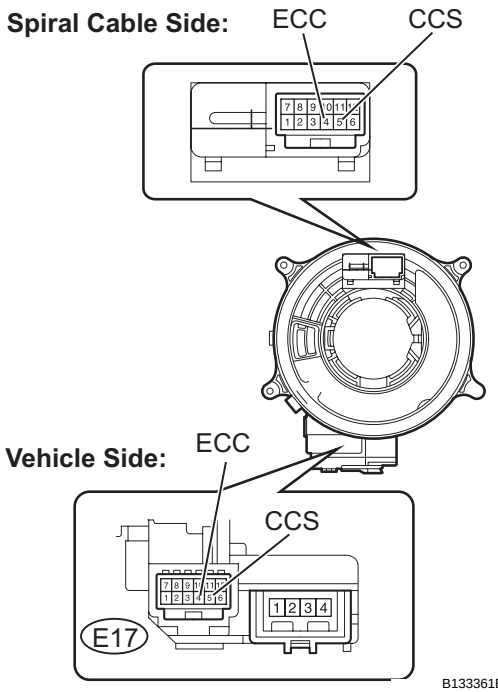

NOTICE:
The spiral cable is an important part of the SRS airbag system. Incorrect removal or installation of the spiral cable may prevent the airbag from deploying. Be sure to read the page shown in the brackets. (See page RS-357)

(a) Remove the spiral cable.
(b) Measure the resistance.

Standard resistance

Tester Connection	Specified Condition
Terminal 5 (CCS) main switch side - CCS (E17-5)	Below 1 Ω
Terminal 4 (ECC) main switch side - ECC (E17-4)	Below 1 Ω

HINT:
The spiral cable makes a maximum of approximately 5 rotations.

(c) Reinstall the spiral cable.

NG → REPLACE SPIRAL CABLE

OK

5 CHECK HARNESS AND CONNECTOR (SPIRAL CABLE - ECM AND BODY GROUND)

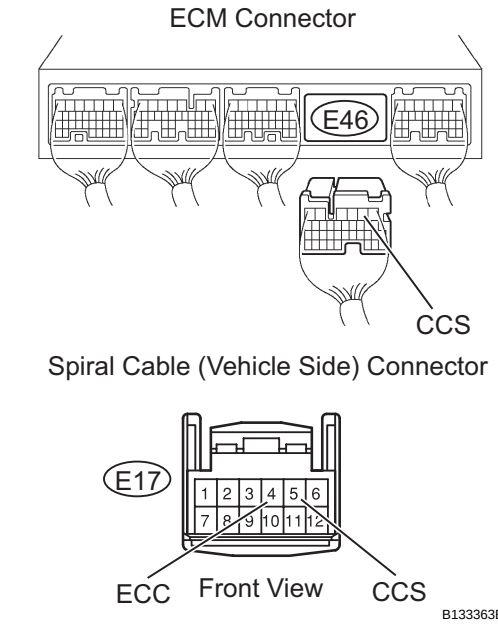

(a) Disconnect the E46 ECM connector.
(b) Disconnect the E17 spiral cable (vehicle side) connector.
(c) Measure the resistance.

Standard resistance

Tester Connection	Specified Condition
E46-2 (CCS) - E17-5 (CCS)	Below 1 Ω
E46-2 (CCS) or E17-5 (CCS) - Body ground	10 kΩ or higher
E17-4 (ECC) - Body ground	Below 1 Ω

(d) Reconnect the ECM connector.
(e) Reconnect the spiral cable (vehicle side) connector.

NG → REPAIR OR REPLACE HARNESS OR CONNECTOR

OK

REPLACE ECM

Cruise Main Indicator Light Circuit

DESCRIPTION

When the cruise control main switch is turned off, cruise control does not operate.

WIRING DIAGRAM

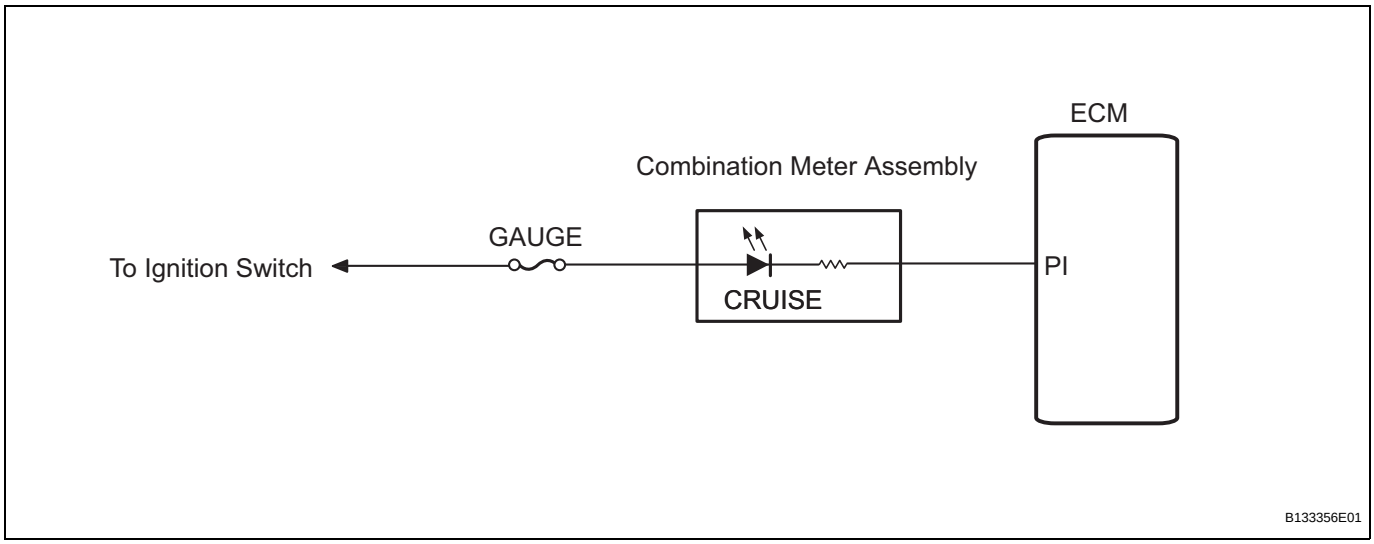

CC

INSPECTION PROCEDURE

1	CHECK HARNESS AND CONNECTOR (ECM - BATTERY)

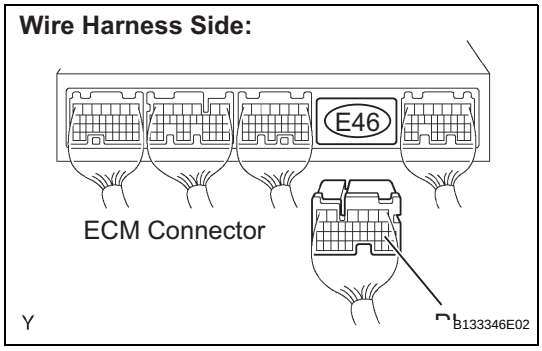

(a) Disconnect the E46 ECM connector.
(b) Measure the voltage.

Standard voltage

Tester Connection	Condition	Specified Condition
PI (E46-18) - Body ground	Ignition switch ON	11 to 14 V

(c) Reconnect the ECM connector.

OK → **PROCEED TO NEXT CIRCUIT INSPECTION SHOWN IN PROBLEM SYMPTOMS TABLE**

NG

2 CHECK HARNESS AND CONNECTOR (COMBINATION METER ASSEMBLY - ECM)

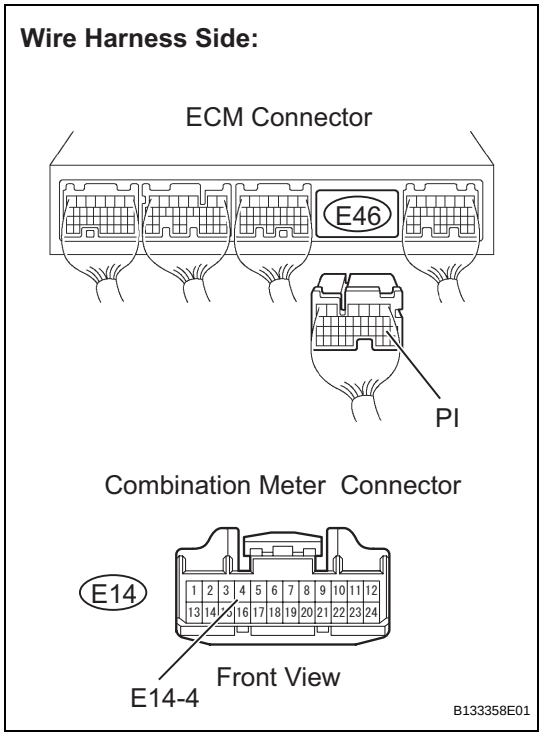

(a) Disconnect the E46 ECM connector.
(b) Disconnect the combination meter E14 connector.
(c) Measure the resistance.

Standard resistance

Tester Connection	Specified Condition
E14-4 - PI (E46-18)	Below 1Ω
E14-4 - Body ground	10 kΩ or higher

(d) Reconnect the combination meter connector.
(e) Reconnect the ECM connector.

NG → **REPAIR OR REPLACE HARNESS OR CONNECTOR (COMBINATION METER ASSEMBLY - ECM)**

OK

3 CHECK HARNESS AND CONNECTOR (COMBINATION METER ASSEMBLY - BATTERY)

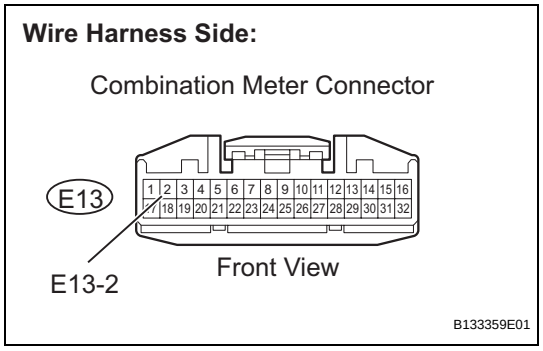

(a) Disconnect the E13 combination meter connector.
(b) Measure the voltage.

Standard voltage

Tester Connection	Condition	Specified Condition
E13-2 - Body ground	Ignition switch ON	11 to 14 V

(c) Reconnect the combination meter connector.

NG → **REPAIR OR REPLACE HARNESS OR CONNECTOR (COMBINATION METER - BATTERY)**

OK

REPLACE COMBINATION METER ASSEMBLY

CC

TC and CG Terminal Circuit

DESCRIPTION

The DLC3 circuit enables reading of Diagnostic Trouble Codes (DTCs) without using intelligent testers by connecting terminals TC and CG of the DLC3 connector.
Stored DTCs are displayed in blinking patterns of the CRUISE MAIN indicator light located on the combination meter.

WIRING DIAGRAM

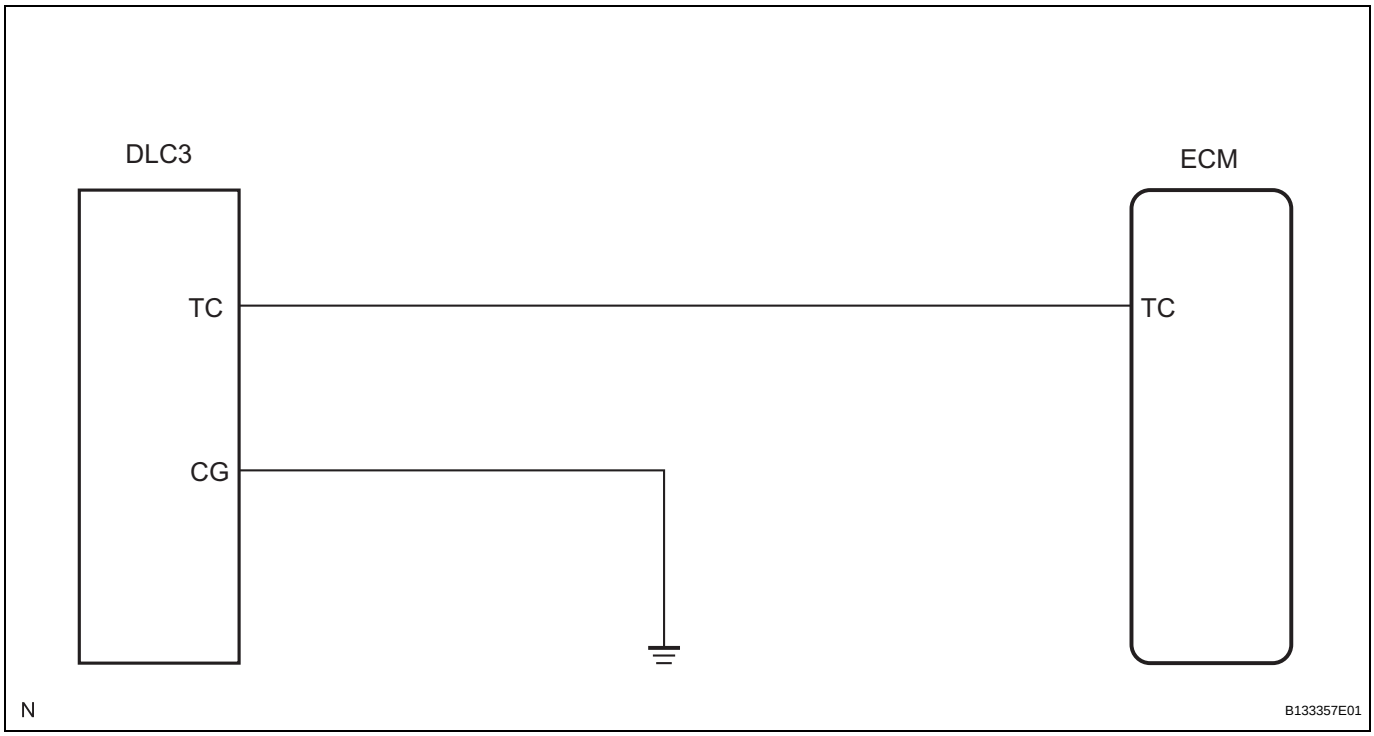

HINT:
When a particular warning light blinks continuously, a ground short in the wiring of terminal TC of the DLC3 or an internal ground short in the relevant ECU is suspected.

1 CHECK HARNESS AND CONNECTOR (TC of DLC3 - ECM)

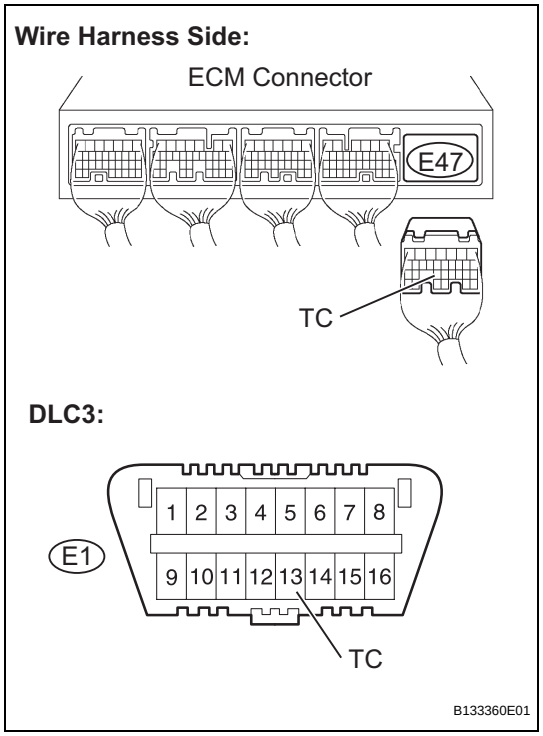

(a) Disconnect the E47 connector of the ECM.
(b) Measure the resistance.
Standard resistance

Tester Connection	Specified Condition
TC (E1-13) - TC (E47-23)	Below 1 Ω

(c) Reconnect the ECM connector.

NG → **REPAIR OR REPLACE HARNESS OR CONNECTOR (TC of DLC3 - ECM)**

OK

2 CHECK HARNESS AND CONNECTOR (TC of DLC3 - BODY GROUND)

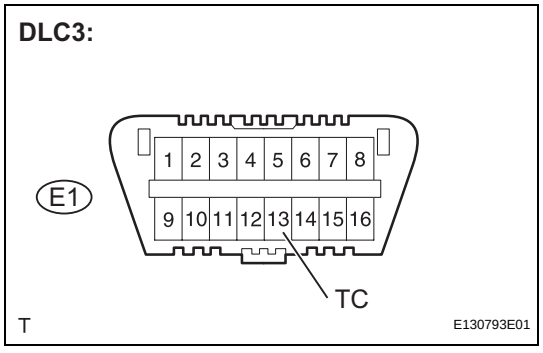

(a) Measure the resistance.
Standard resistance

Tester Connection	Specified Condition
TC (E1-13) - Body ground	10 kΩ or higher

NG → **REPAIR OR REPLACE HARNESS OR CONNECTOR (TC CIRCUIT)**

OK

CC

3	CHECK HARNESS AND CONNECTOR (CG of DLC3 - BODY GROUND)

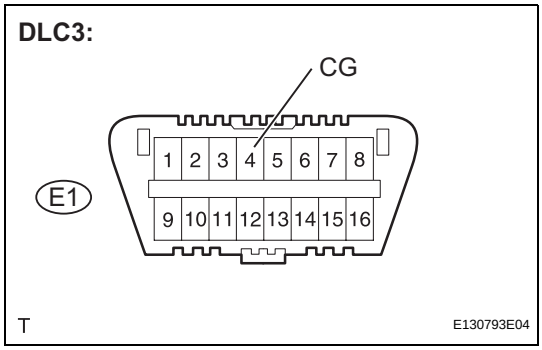

(a) Measure the resistance.
Standard resistance

Tester Connection	Specified Condition
CG (E1-4) - Body ground	Below 1 Ω

NG → **REPAIR OR REPLACE HARNESS OR CONNECTOR (CG of DLC3 - BODY GROUND)**

OK

REPLACE ECM

CRUISE CONTROL MAIN SWITCH

COMPONENTS

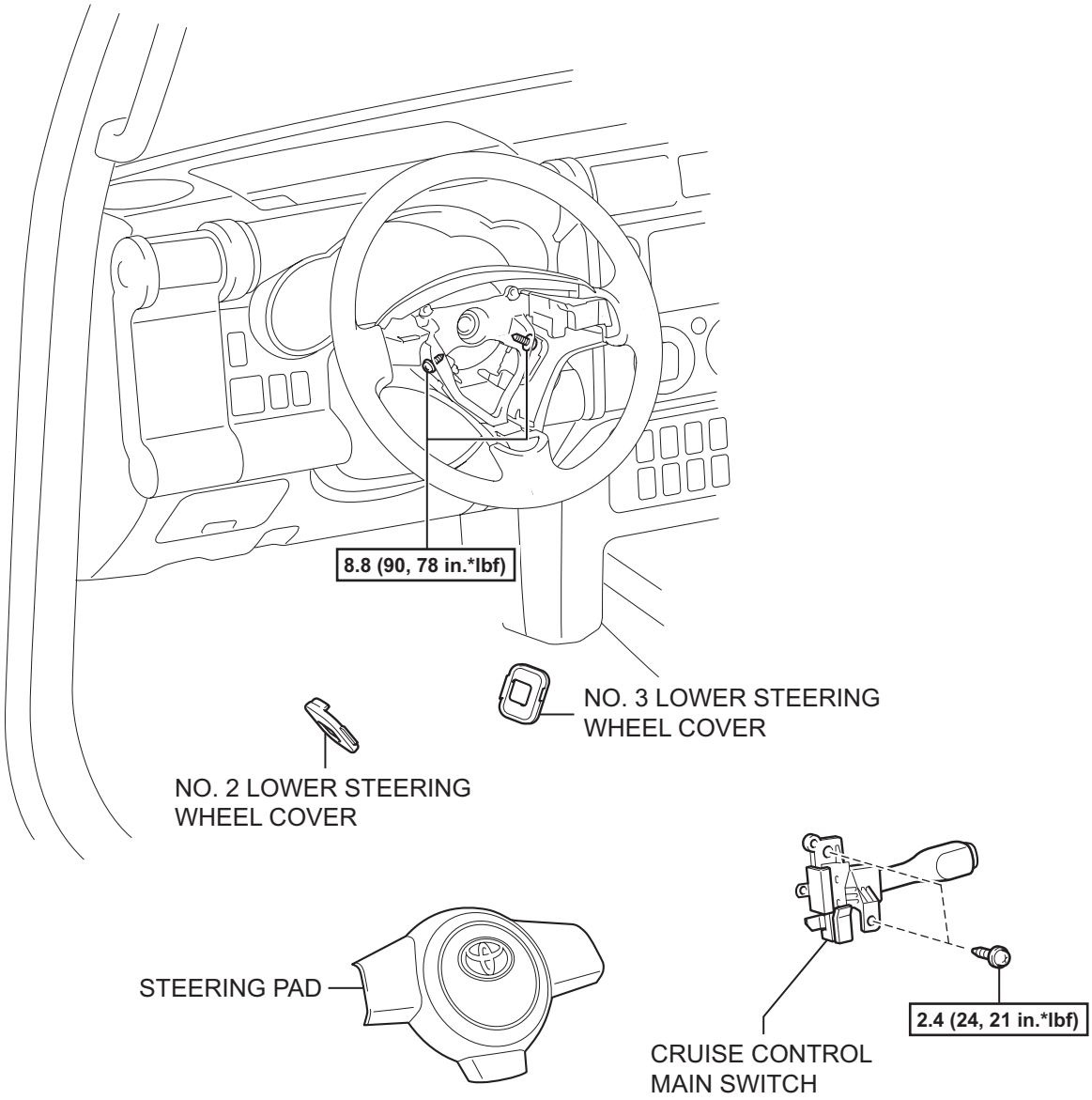

N*m (kgf*cm, ft*lbf) : Specified torque

T

E127937E01

REMOVAL

CAUTION:
Some of these service operations affect the SRS airbag system. Read the precautionary notices concerning the SRS airbag system before servicing (See page RS-1).

1. **DISCONNECT CABLE FROM NEGATIVE BATTERY TERMINAL**
   Wait for at least 90 seconds after disconnecting the cable to prevent the airbag from working.
2. **REMOVE NO. 2 LOWER STEERING WHEEL COVER (See page RS-345)**
3. **REMOVE NO. 3 LOWER STEERING WHEEL COVER (See page RS-345)**
4. **REMOVE STEERING PAD (See page RS-346)**
5. **REMOVE CRUISE CONTROL MAIN SWITCH**
   (a) Disconnect the connector.
   (b) Remove the 2 screws and remove the cruise control main switch.

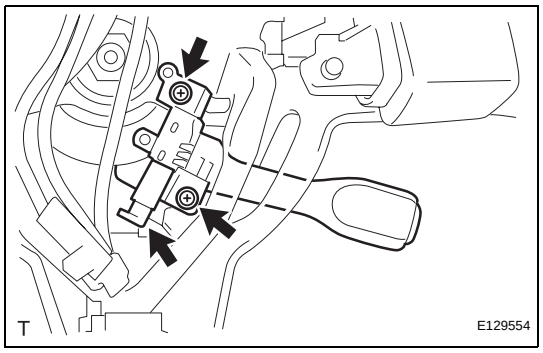

CC

INSPECTION

1. INSPECT CRUISE CONTROL MAIN SWITCH

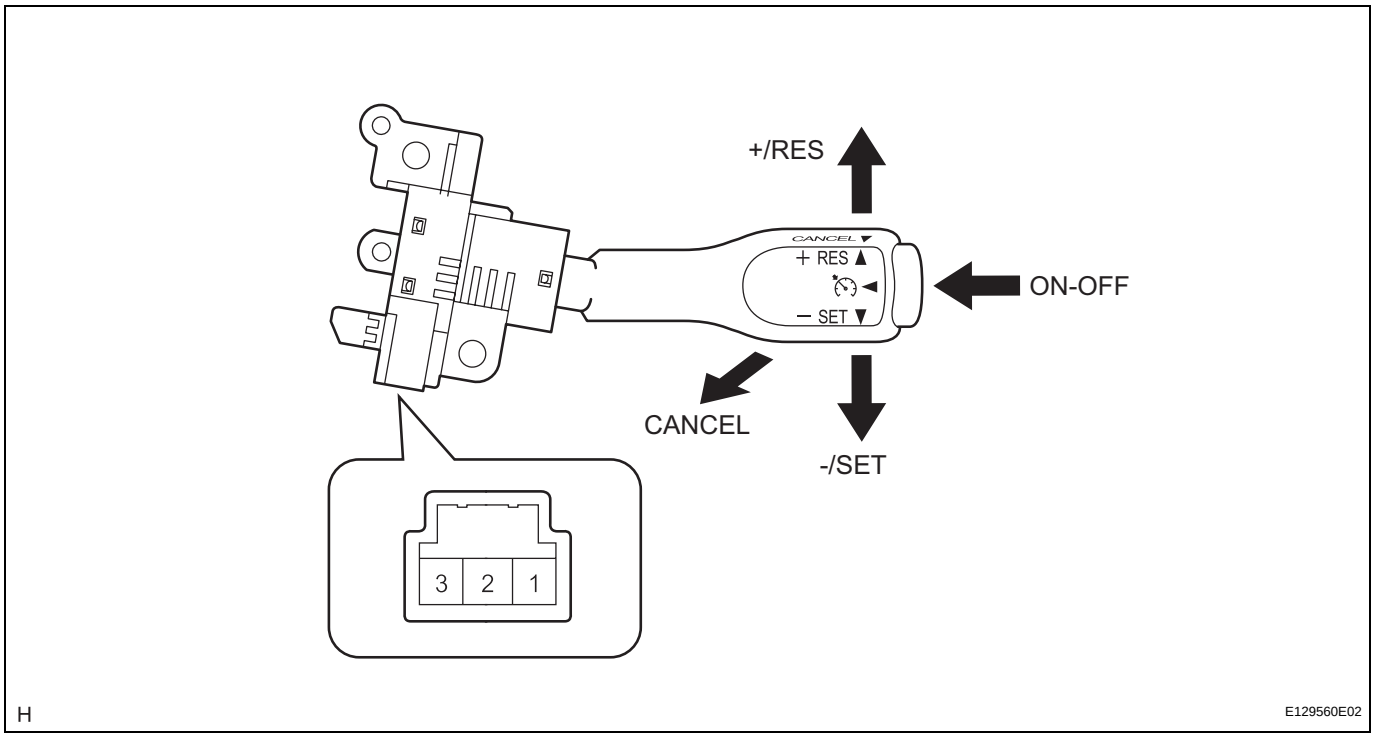

(a) Measure the resistance and check the results in accordance with the value(s) in the table below.

Standard resistance

Tester Connection	Switch Condition	Specified Condition
1(ECC) - 3(CCS)	Neutral	10 kΩ or higher
1(ECC) - 3(CCS)	+/RES	216 to 264 Ω
1(ECC) - 3(CCS)	-/SET	567 to 693 Ω
1(ECC) - 3(CCS)	CANCEL	1,386 to 1,694 Ω
1(ECC) - 3(CCS)	Main Switch off	10 kΩ or higher
1(ECC) - 3(CCS)	Main Switch on	Below 1 Ω

If the result is not as specified, replace the cruise control main switch.

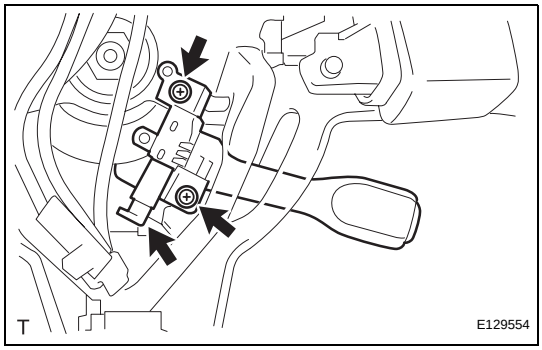

INSTALLATION

1. INSTALL CRUISE CONTROL MAIN SWITCH

(a) Install the cruise control main switch with the 2 screws.
Torque: 2.4 N*m (24 kgf*cm, 21 in.*lbf)

(b) Connect the connector.

2. INSTALL STEERING PAD (See page RS-346)

3. INSTALL NO. 3 LOWER STEERING WHEEL COVER (See page RS-347)

4. INSTALL NO. 2 LOWER STEERING WHEEL COVER (See page RS-347)

5. CONNECT CABLE TO NEGATIVE BATTERY TERMINAL
Torque: 3.9 N*m (40 kgf*cm, 35 in.*lbf)

6. INSPECT SRS WARNING LIGHT
(See page RS-29)

CLUTCH SWITCH

COMPONENTS

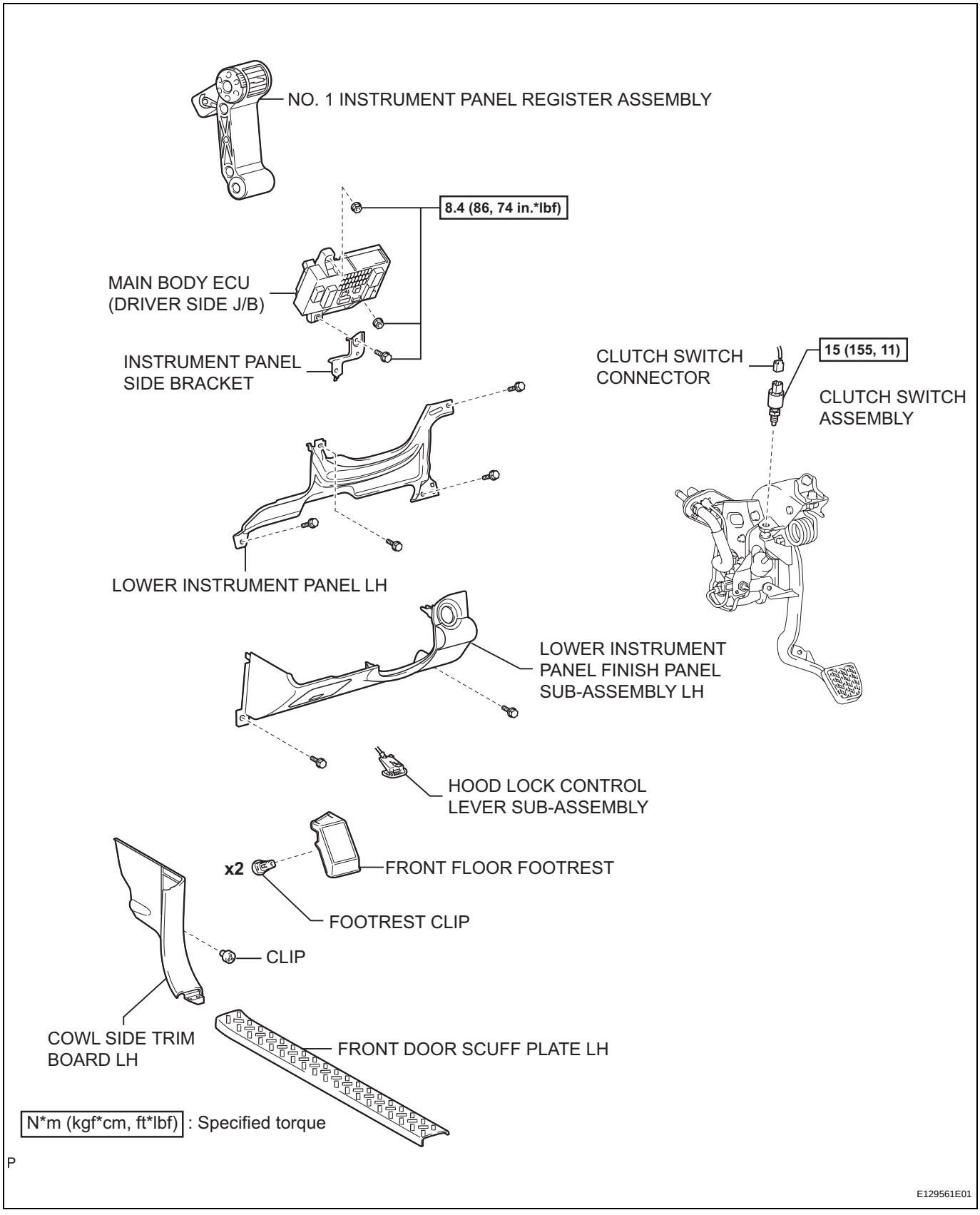

REMOVAL

1. **DISCONNECT CABLE FROM NEGATIVE BATTERY TERMINAL**
2. **REMOVE FRONT DOOR SCUFF PLATE LH (See page ME-59)**
3. **REMOVE FRONT FLOOR FOOTREST (See page IR-2)**
4. **REMOVE FOOTREST CLIP (See page IR-2)**
5. **REMOVE COWL SIDE TRIM BOARD LH (See page ME-59)**
6. **REMOVE NO. 1 INSTRUMENT PANEL REGISTER ASSEMBLY (See page IP-13)**
7. **SEPARATE HOOD LOCK CONTROL LEVER SUB-ASSEMBLY (See page IP-13)**
8. **REMOVE LOWER INSTRUMENT PANEL FINISH PANEL SUB-ASSEMBLY LH (See page IP-14)**
9. **REMOVE LOWER INSTRUMENT PANEL LH (See page IP-14)**
10. **REMOVE INSTRUMENT PANEL SIDE BRACKET**
    (a) Remove the bolt and remove the instrument panel side bracket.

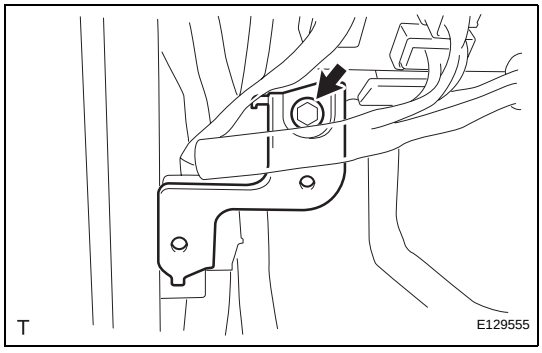

11. **SEPARATE MAIN BODY ECU (DRIVER SIDE J/B)**
    (a) Remove the 2 nuts and separate the main body ECU.

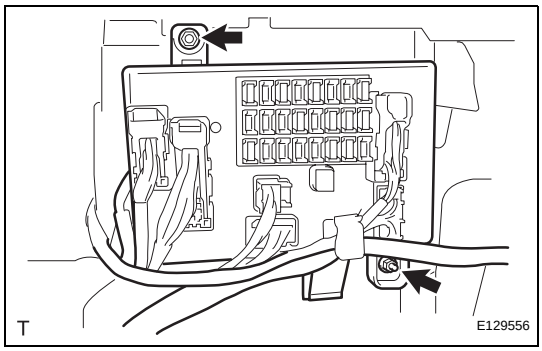

12. **REMOVE CLUTCH SWITCH ASSEMBLY**
    (a) Disconnect the connector.
    (b) Loosen the nut and remove the clutch switch assembly.

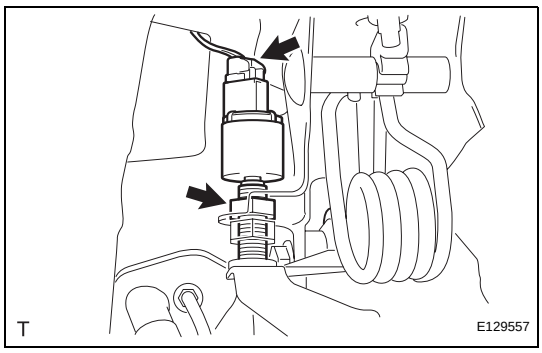

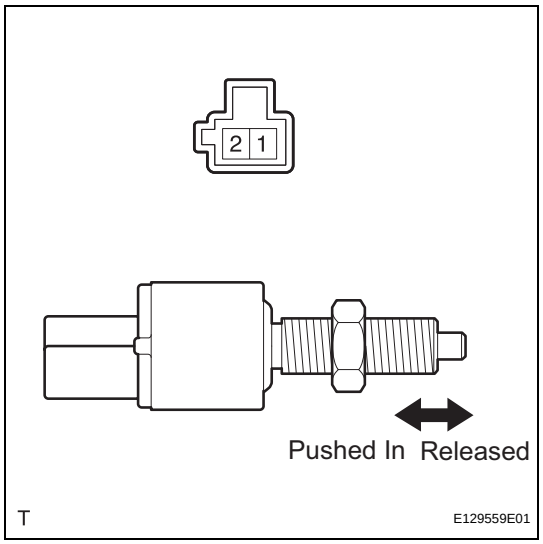

INSPECTION

1. INSPECT CLUTCH SWITCH

(a) Remove the clutch switch.

(b) Measure the resistance and check that the results in accordance with the value(s) in the table below.

Standard resistance

Tester Connection	Condition	Specified Condition
1 - 2	Switch pin released (Clutch pedal depressed)	10 kΩ or higher
1 - 2	Switch pin pushed in (Clutch pedal released)	Below 1Ω

If the result is not as specified, replace the clutch switch.

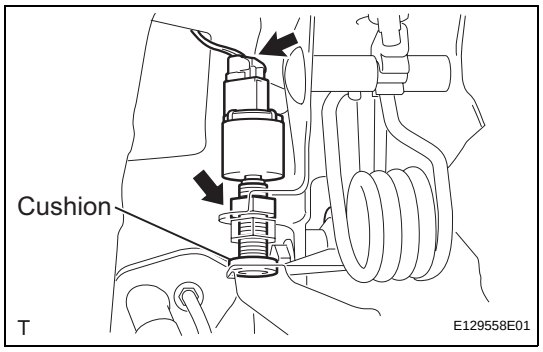

INSTALLATION

1. INSTALL CLUTCH SWITCH ASSEMBLY

(a) Fully loosen the lock nut of the clutch switch assembly.

(b) Adjust the clutch switch until the threaded portion comes into contact with the cushion. Tighten the lock nut and ensure that the threaded portion is in contact with the cushion.

Torque: 15 N*m (155 kgf*cm, 11 ft.*lbf)

(c) Connect the connector.

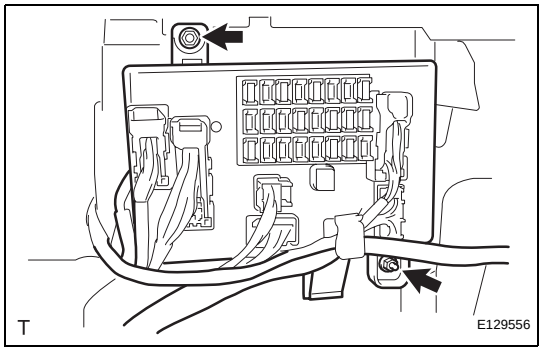

2. INSTALL MAIN BODY ECU (DRIVER SIDE J/B)

(a) Install the main body ECU with the 2 nuts.

Torque: 8.4 N*m (86 kgf*cm, 74 in.*lbf)

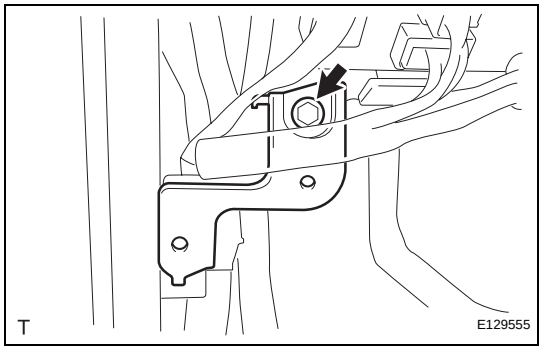

3. INSTALL INSTRUMENT PANEL SIDE BRACKET

(a) Install the instrument panel side bracket with the bolt.

Torque: 8.4 N*m (86 kgf*cm, 74 in.*lbf)

4. INSTALL LOWER INSTRUMENT PANEL LH (See page IP-29)

5. INSTALL LOWER INSTRUMENT CLUSTER FINISH PANEL SUB-ASSEMBLY (See page IP-29)

6. CONNECT HOOD LOCK CONTROL LEVER SUB-ASSEMBLY (See page IP-30)

7. INSTALL NO. 1 INSTRUMENT PANEL REGISTER ASSEMBLY (See page IP-13)

8. INSTALL COWL SIDE TRIM BOARD LH (See page ME-61)

CC

9. **INSTALL FOOTREST CLIP (See page IR-2)**
10. **INSTALL FRONT FLOOR FOOTREST (See page IR-2)**
11. **INSTALL FRONT DOOR SCUFF PLATE LH (See page ME-61)**
12. **CONNECT CABLE TO NEGATIVE BATTERY TERMINAL**
    Torque: 3.9 N*m (40 kgf*cm, 35 in.*lbf)

DIFFERENTIAL SYSTEM

PRECAUTION

1. **Before disassembling the differential assembly, thoroughly clean it to remove any sand, mud or foreign matter. This will help prevent contamination during disassembly and reassembly.**
2. **When removing the rear differential carrier cover or any other light alloy part, do not pry it off with a screwdriver or other tool that may cause damage. Instead, tap the part with a plastic-faced hammer.**
3. **Always arrange disassembled parts in the order they were removed and protect them from foreign matter.**
4. **Before installation of each part, thoroughly clean and dry it. Then apply hypoid gear oil LSD to it. Do not use alkaline chemicals to clean aluminum parts, rubber parts or ring gear set bolts. Also, do not use white gasoline or other cleaning oils to clean O-rings, oil seals or rubber parts.**
5. **Coat sliding surfaces or rotating parts with hypoid gear oil LSD.**
6. **Do not fix a part directly in a vise. Place aluminum plates between the part and vise.**
7. **Be careful not to damage the contact surfaces of the case. Such damage may cause oil leakage.**
8. **Before applying sealant, remove deposited oil sealant and clean the part to be sealed using white gasoline.**
9. **After sealing parts, do not allow oil to come into contact with the seal for at least an hour.**
10. **Do not allow scratches on surfaces which contact an oil seal, O-ring or gasket. Scratches may lead to oil leakage.**
11. **When press-fitting an oil seal, be careful not to damage the lip of the oil seal or its outside periphery.**
12. **When replacing a bearing, replace the inner and outer races as a set.**

PROBLEM SYMPTOMS TABLE

Use the table below to help determine the cause of the problem symptom. The potential causes of the symptoms are listed in order of probability in the "Suspected Area" column of the table. Check each symptom by checking the suspected areas in the order they are listed. Replace parts as necessary.

Differential system

Symptom	Suspected area	See page
Oil leak from front differential	1. Oil (level too high or wrong grade)	DF-3
	2. Front differential side oil seal (worn or damaged)	DF-23
	3. Front differential rear oil seal (worn or damaged)	DF-24
	4. Companion flange (loose or damaged)	DF-22
Oil leak from rear differential	1. Oil (level too high or wrong grade)	DF-3
	2. Rear differential front oil seal (worn or damaged)	DF-9
	3. Companion flange (loose or damaged)	DF-48
Oil leak from front drive pinion shaft	1. Oil (level too high or wrong grade)	DF-3
	2. Front differential side oil seal (worn or damaged)	DF-13
	3. Front differential rear oil seal (worn or damaged)	DF-5
	4. Companion flange (loose or damaged)	DF-22
Oil leak from rear drive pinion shaft	1. Oil (level too high or wrong grade)	DF-3
	2. Rear differential front oil seal (worn or damaged)	DF-9
	3. Companion flange (loose or damaged)	DF-48
Differential lock does not operate	1. Differential lock switch	DF-102
	2. Rear differential lock actuator	DF-102
	3. Four wheel drive control ECU	DF-101
	4. Differential carrier (Faulty)	-
	5. Wiring or ground (Faulty)	-

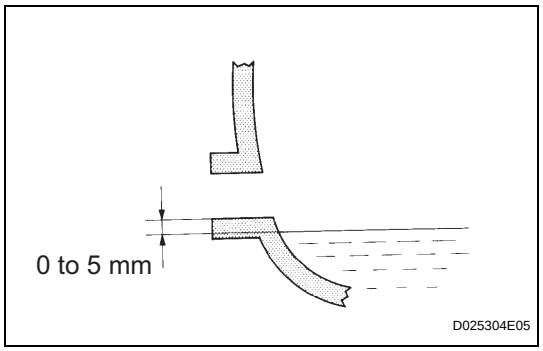

DIFFERENTIAL OIL

ON-VEHICLE INSPECTION

1. CHECK DIFFERENTIAL OIL

(a) Stop the vehicle on a level surface.

(b) Remove the differential filler plug and gasket.

(c) Check that the oil level is between 0 to 5 mm (0 to 0.20 in.) from the bottom lip of the differential filler plug hole.

NOTICE:

- **After changing the oil seal, drive the vehicle and then check the oil level again.**
- **Too much or too little oil will lead to differential problems.**

HINT:

If necessary, fill the differential carrier assembly with hypoid gear oil.

Recommended viscosity

Item	Temperature	Viscosity
Front w/ A.D.D.		SAE 75W-90
Front differential for w/o A.D.D. Rear differential	Above -18°C (-0.4°F)	SAE 90
	Below -18°C (-0.4°F)	SAE 85W-90

Oil grade

Item	Grade
Front differential (4WD)	Hypoid gear oil API GL-4 or GL-5
Front differential (2WD) Rear differential (all type)	Hypoid gear oil API GL-5

Front differential oil capacity

Item	Capacity
w/o A.D.D.	1.35 to 1.45 liters (1.42 to 1.53 US qts., 1.18 to 1.27 Imp. qts.)
w/ A.D.D.	1.45 to 1.55 liters (1.53 to 1.63 US qts., 1.27 to 1.36 Imp. qts.)

Rear differential oil capacity

Item	Capacity
w/ Differential lock	2.85 to 2.95 liters (3.01 to 3.12 US qts, 2.51 to 2.60 Imp. qts.)
w/o Differential lock.	2.95 to 3.05 liters (3.12 to 3.22 US qts, 2.60 to 2.68 Imp. qts.)

(d) Check for oil leakage when the oil level is low.

(e) Install the differential filler plug with a new gasket.

Torque: Front differential
39 N*m (400 kgf*cm, 29 ft.*lbf)
Rear differential
49 N*m (500 kgf*cm, 36 ft.*lbf)

FRONT DIFFERENTIAL CARRIER OIL SEAL

COMPONENTS

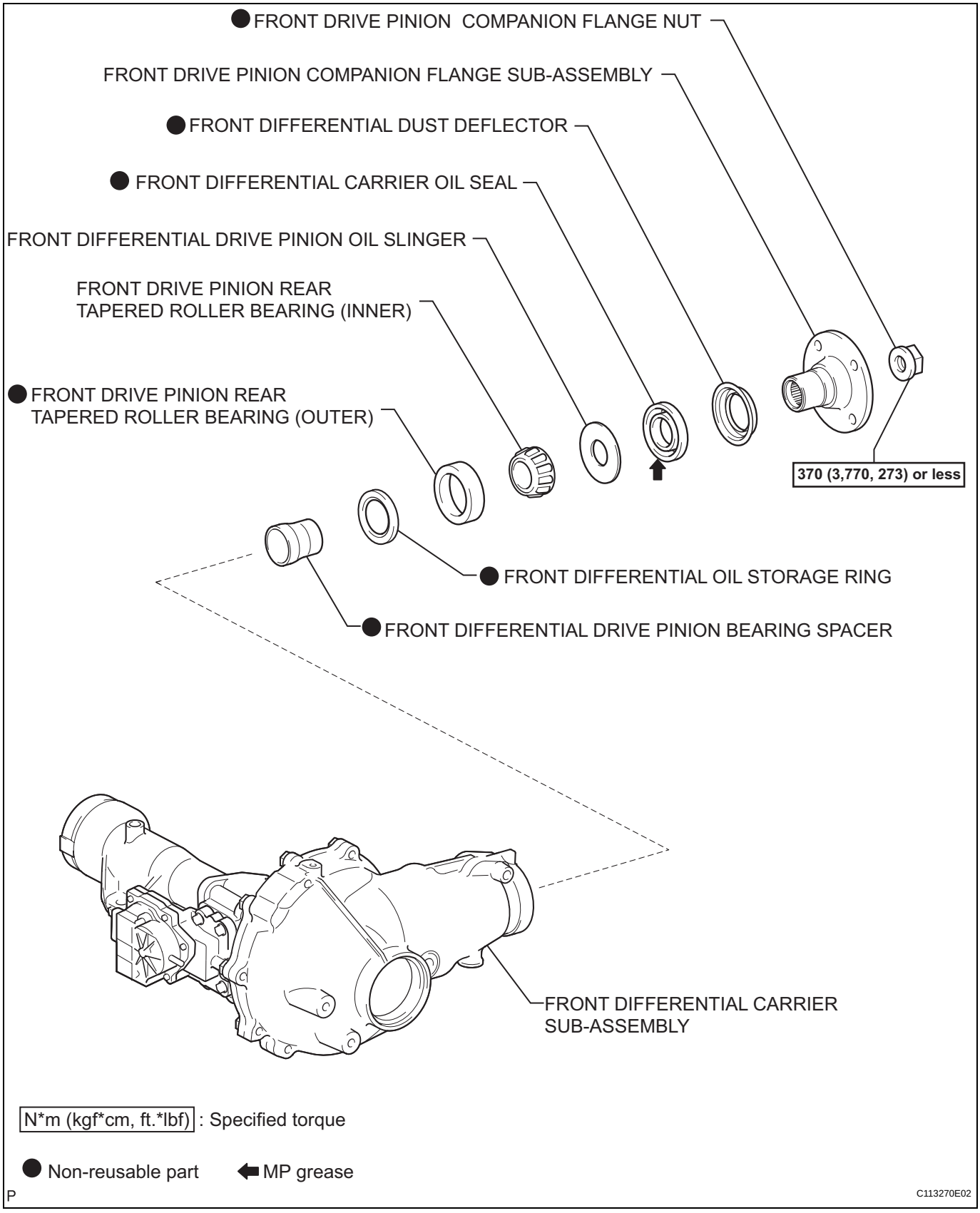

DF

REMOVAL

1. **REMOVE NO. 1 ENGINE UNDER COVER (See page EM-6)**

2. **REMOVE REAR ENGINE UNDER COVER ASSEMBLY**
   (a) Remove the 4 bolts, then remove the rear engine under cover.

3. **REMOVE FRONT PROPELLER SHAFT ASSEMBLY (See page PR-2)**

4. **REMOVE FRONT DRIVE PINION COMPANION FLANGE NUT**
   (a) Using SST and a hammer, loosen the staked part of the nut.
   SST 09930-00010

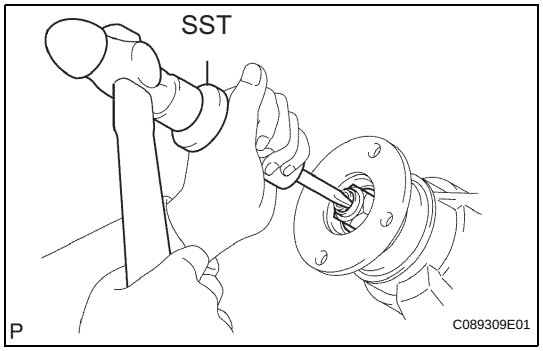

   (b) Using SST to hold the companion flange, remove the nut.
   SST 09330-00021 (09330-00030)

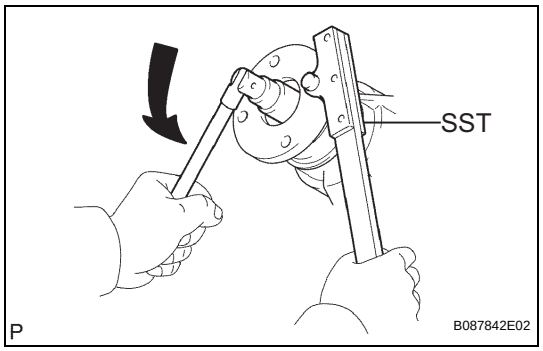

5. **REMOVE FRONT DRIVE PINION COMPANION FLANGE SUB-ASSEMBLY**
   (a) Using SST, remove the companion flange.
   SST 09950-30012 (09951-03010, 09953-03010, 09954-03010, 09955-03030, 09956-03020)
   NOTICE:
   Before using SST (center bolt), apply hypoid gear oil to its threads and tip.

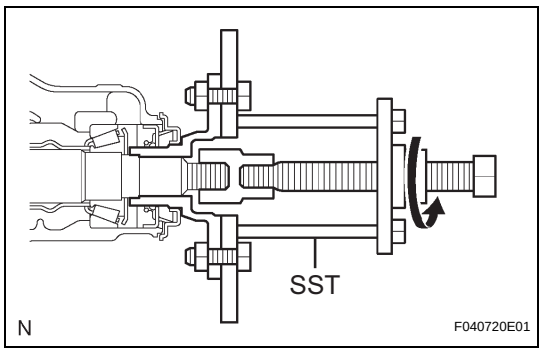

6. **REMOVE FRONT DIFFERENTIAL CARRIER OIL SEAL**
   (a) Using SST, remove the oil seal.
   SST 09308-10010

7. **REMOVE FRONT DIFFERENTIAL DRIVE PINION OIL SLINGER**

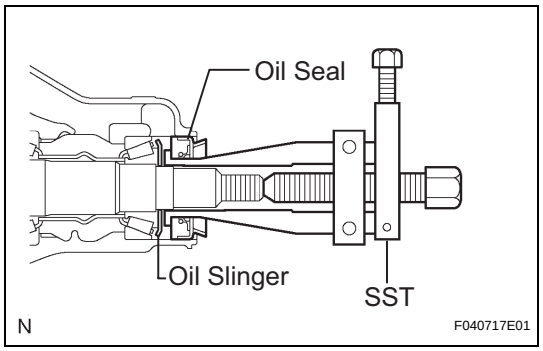

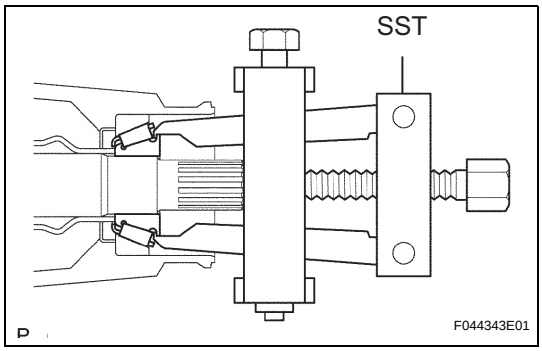

8. REMOVE FRONT DRIVE PINION REAR TAPERED ROLLER BEARING

(a) Using SST, remove the roller bearing (inner).
SST 09556-22010

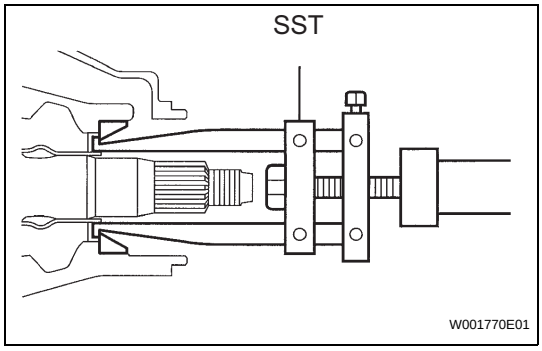

(b) Using SST, tap out the roller bearing (outer).
SST 09308-00010

9. REMOVE FRONT DIFFERENTIAL OIL STORAGE RING

(a) Using a screwdriver and hammer, tap out the oil storage ring.

10. REMOVE FRONT DIFFERENTIAL DRIVE PINION BEARING SPACER

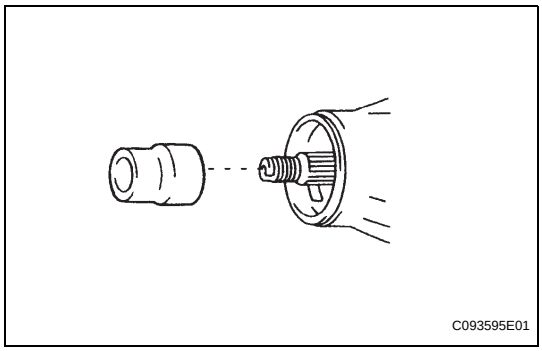

INSTALLATION

1. INSTALL FRONT DIFFERENTIAL DRIVE PINION BEARING SPACER

(a) Install a new bearing spacer.
HINT:
Install the spacer in the correct direction.

2. INSTALL FRONT DIFFERENTIAL OIL STORAGE RING

(a) Using a brass bar and hammer, tap in a new oil storage ring.
NOTICE:
Be careful not to damage the oil storage ring.

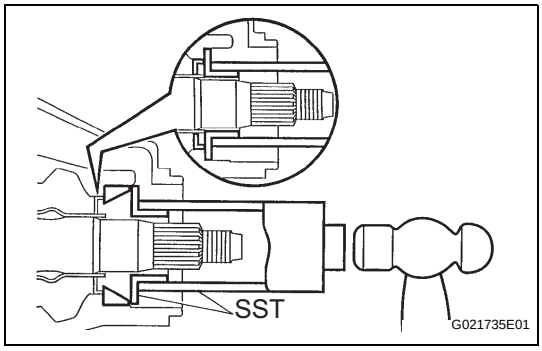

3. INSTALL FRONT DRIVE PINION REAR TAPERED ROLLER BEARING

(a) Using SST and a hammer, install the roller bearing (outer).
SST 09316-60011 (09316-00011, 09316-00021)

(b) Install the roller bearing (inner).

4. INSTALL FRONT DIFFERENTIAL DRIVE PINION OIL SLINGER

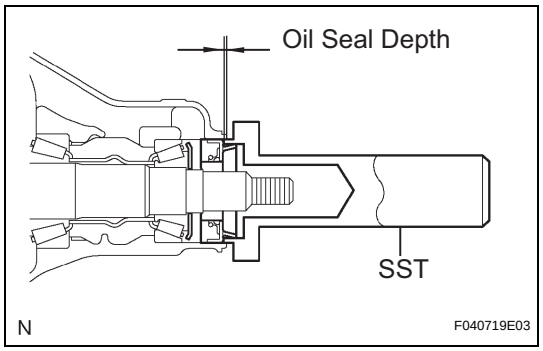

5. INSTALL FRONT DIFFERENTIAL CARRIER OIL SEAL

(a) Apply MP grease to the lip of a new oil seal.

(b) Using SST and a hammer, tap in the oil seal.

SST 09554-22010

Oil seal depth:

3.9 to 4.8 mm (0.152 to 0.188in.)

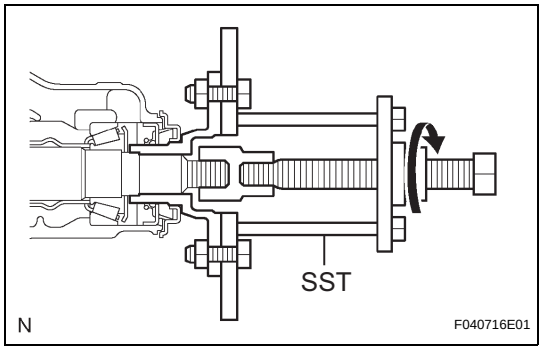

6. INSTALL FRONT DRIVE PINION COMPANION FLANGE SUB-ASSEMBLY

(a) Using SST, instal the companion flange.

SST 09950-30012 (09951-03010, 09953-03010, 09954-03010, 09955-03030, 09956-03020)

NOTICE:

Before using SST (center bolt), apply hypoid gear oil to its threads and tip.

(b) Using SST to hold the companion flange, install the nut.

SST 09330-00021 (09330-00030)

Torque: 370 N*m (3,770 kgf*cm, 273 ft.*lbf) or less

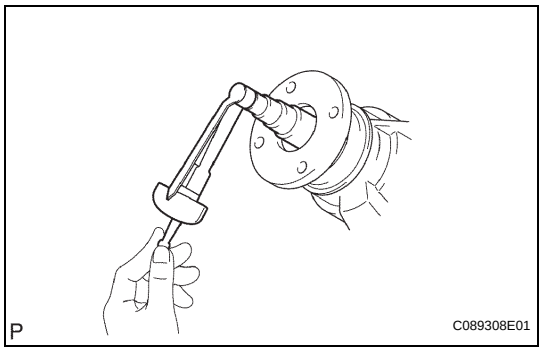

7. INSPECT DIFFERENTIAL DRIVE PINION PRELOAD

(a) Using a torque wench, measure the preload.

Preload (at starting)

Item	Specified Condition
New bearing	0.98 to 1.57 N*m (10 to 16 kgf*cm, 8.7 to 13.9 in.*lbf)
Used bearing	0.49 to 0.78 N*m (5 to 8 kgf*cm, 4.3 to 6.9 in.*lbf)

If the result is not as specified, adjust the preload.

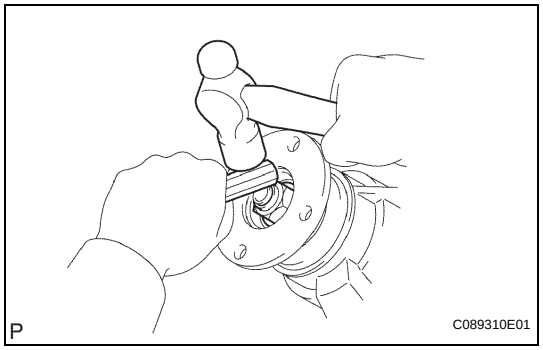

8. STAKE FRONT DRIVE PINION COMPANION FLANGE NUT

(a) Using a chisel and hammer, stake the nut.

9. INSTALL FRONT PROPELLER SHAFT ASSEMBLY (See page PR-6)

10. ADD DIFFERENTIAL OIL (See page DF-3)

11. CHECK FOR DIFFERENTIAL OIL LEAKAGE

12. INSTALL REAR ENGINE UNDER COVER ASSEMBLY

(a) Install the rear engine under cover with the 4 bolts.

Torque: 29 N*m (296 kgf*cm, 21 ft.*lbf)

13. INSTALL NO. 1 ENGINE UNDER COVER (See page EM-7)

REAR DIFFERENTIAL CARRIER OIL SEAL

COMPONENTS

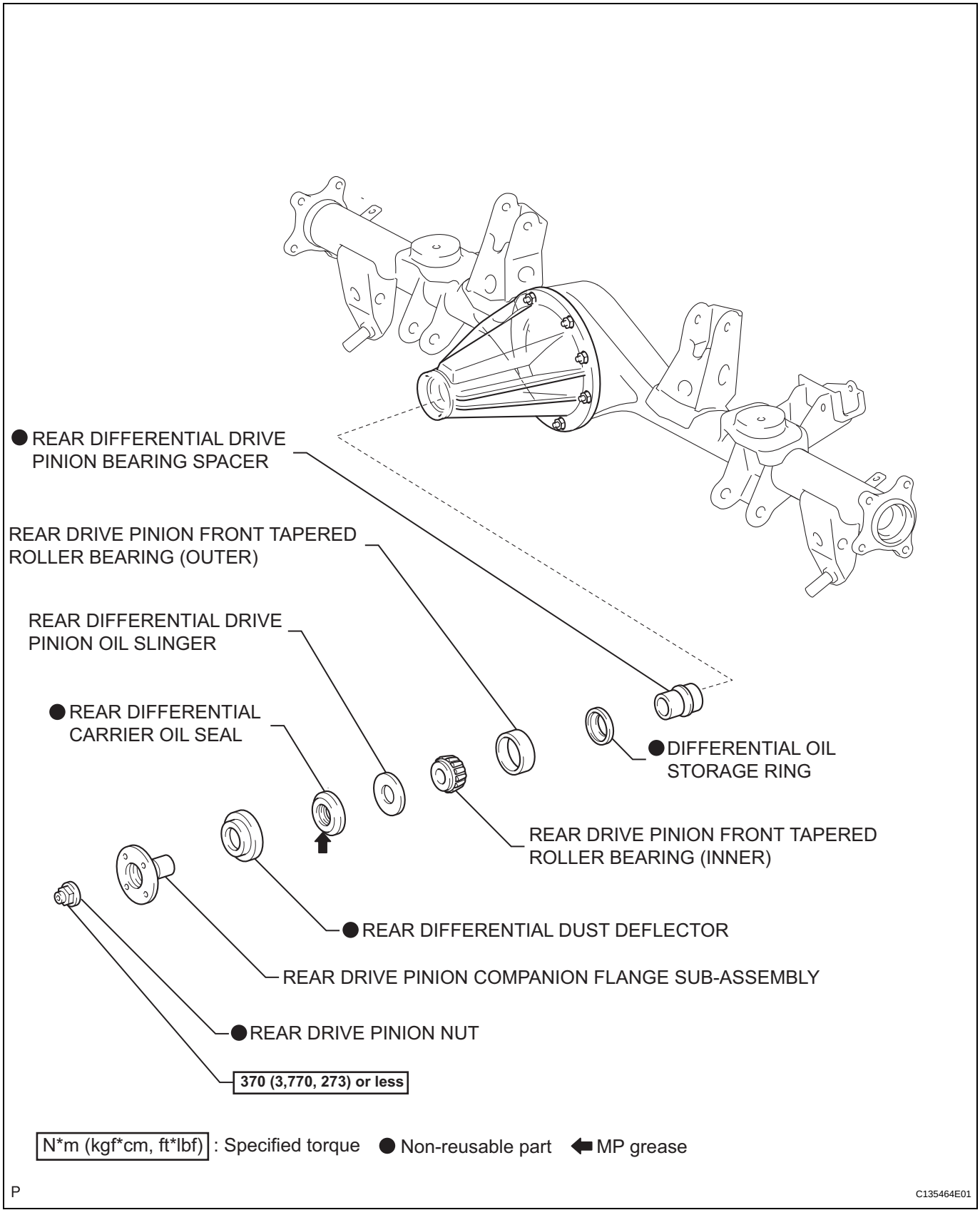

DF

REMOVAL

1. **REMOVE REAR PROPELLER SHAFT ASSEMBLY (for 2WD) (See page PR-9)**

2. **REMOVE PROPELLER SHAFT ASSEMBLY (for 4WD) (See page PR-9)**

3. **REMOVE REAR DRIVE PINION NUT**

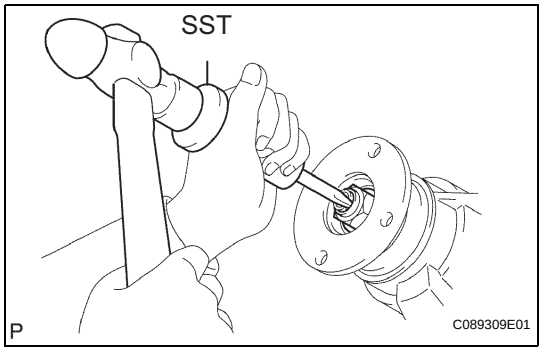

(a) Using SST and a hammer, loosen the staked part of the nut.
SST 09930-00010

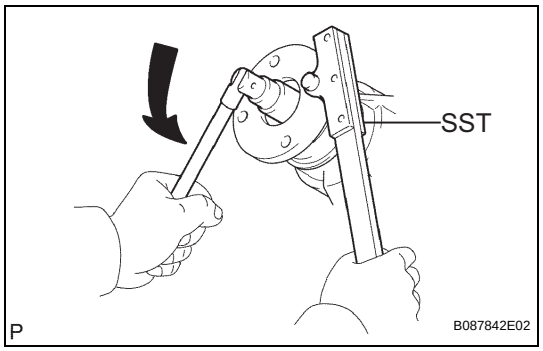

(b) Using SST to hold the companion flange in place, remove the nut.
SST 09330-00021 (09330-00030)

4. **REMOVE REAR DRIVE PINION COMPANION FLANGE SUB-ASSEMBLY**

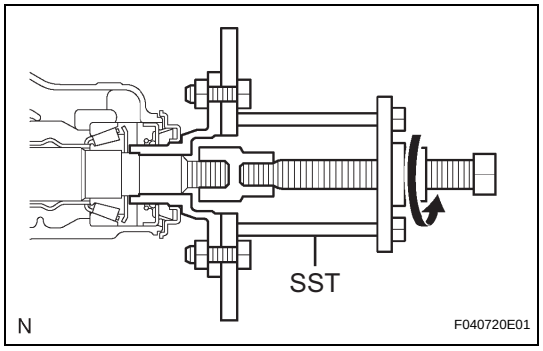

(a) Using SST, remove the companion flange.
SST 09950-30012 (09951-03010, 09953-03010, 09954-03010, 09955-03030, 09956-03030)
NOTICE:
Before using SST (center bolt), apply hypoid gear oil to its threads and tip.

5. **REMOVE REAR DIFFERENTIAL CARRIER OIL SEAL**

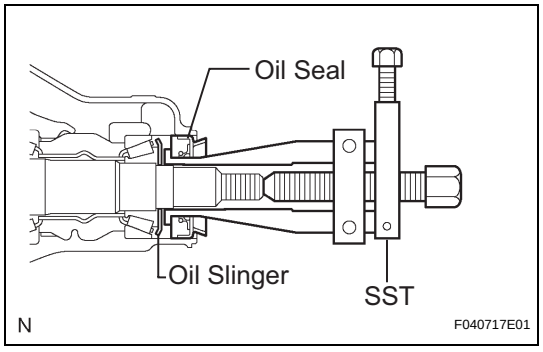

(a) Using SST, remove the oil seal.
SST 09308-10010

6. **REMOVE REAR DIFFERENTIAL DRIVE PINION OIL SLINGER**

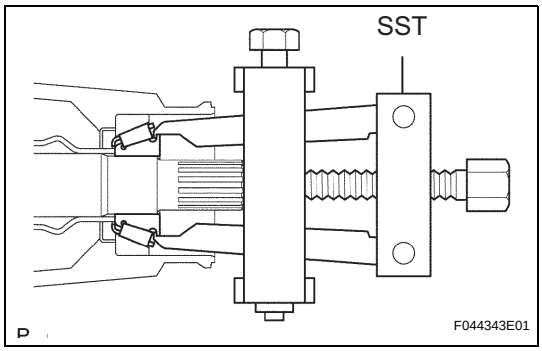

7. REMOVE REAR DRIVE PINION REAR TAPERED ROLLER BEARING

(a) Using SST, remove the roller bearing (inner).
SST 09556-22010

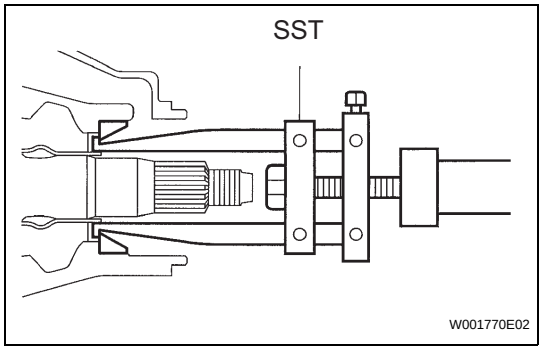

(b) Using SST, tap out the roller bearing (outer).
SST 09308-00010

8. REMOVE DIFFERENTIAL OIL STORAGE RING

(a) Using a screwdriver and hammer, tap out the oil storage ring.

9. REMOVE REAR DIFFERENTIAL DRIVE PINION BEARING SPACER

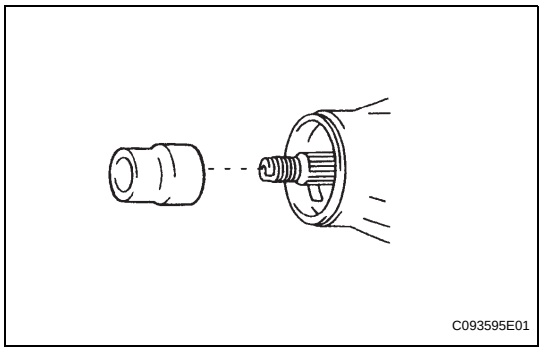

INSTALLATION

1. INSTALL REAR DIFFERENTIAL DRIVE PINION BEARING SPACER

(a) Install a new bearing spacer.
HINT:
Install the spacer in the correct direction.

2. INSTALL DIFFERENTIAL OIL STORAGE RING

(a) Using a brass bar and hammer, tap in a new oil storage ring.
NOTICE:
Be careful not to damage the oil storage ring.

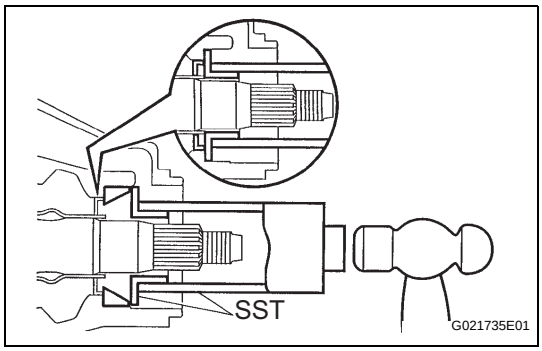

3. INSTALL REAR DRIVE PINION FRONT TAPERED ROLLER BEARING

(a) Using SST and hammer, tap in the roller bearing (outer).
SST 09316-60011 (09316-00011, 09316-00021)

(b) Install the roller bearing (inner).

4. INSTALL REAR DIFFERENTIAL DRIVE PINION OIL SLINGER

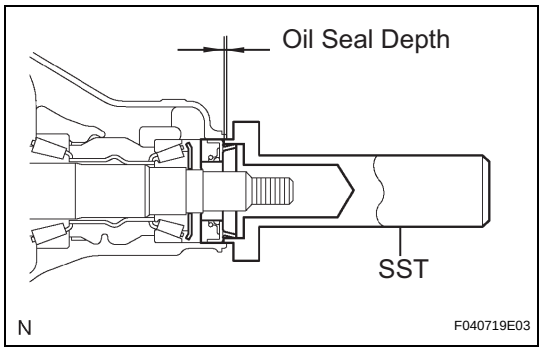

5. INSTALL REAR DIFFERENTIAL CARRIER OIL SEAL

(a) Apply MP grease to the lip of a new oil seal.

(b) Using SST and hammer, tap in the oil seal.

SST 09554-30011

Oil seal depth:

0.55 to 1.45 mm (0.021 to 0.057 in.)

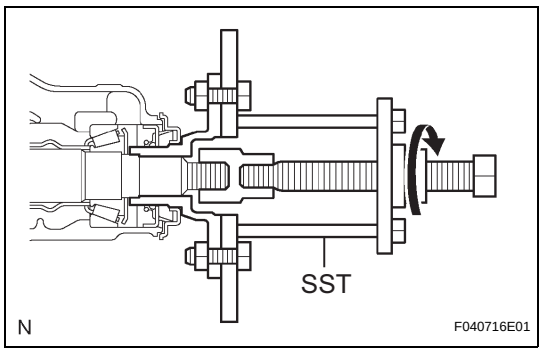

6. INSTALL REAR DRIVE PINION COMPANION FLANGE SUB-ASSEMBLY

(a) Using SST, install the companion flange.

SST 09950-30012 (09951-03010, 09953-03010, 09954-03010, 09955-03030, 09956-03030)

NOTICE:

Before using SST (center bolt), apply hypoid gear oil to its threads and tip.

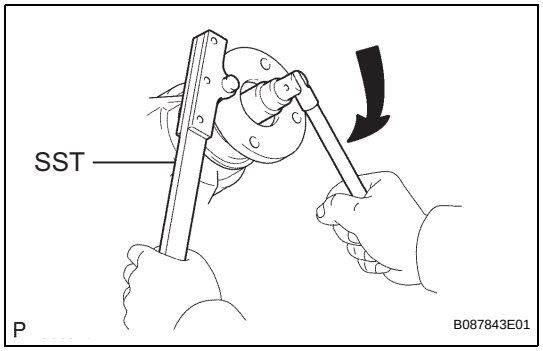

(b) Using SST to hold the companion flange in place, install the nut.

SST 09330-00021 (09330-00030)

Torque: 370 N*m (3,770 kgf*cm, 273 ft.*lbf) or less

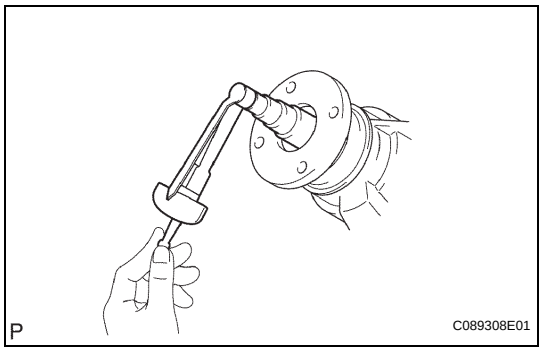

7. INSTALL DIFFERENTIAL DRIVE PINION PRELOAD

(a) Using a torque wrench, measure the preload.

Preload (at starting)

Item	Specified Condition
New bearing	1.05 to 1.64 N*m (11 to 17 kgf*cm, 9.3 to 15 in.*lbf)
Reused bearing	0.56 to 0.85 N*m (6 to 9 kgf*cm, 4.9 to 7.5 in.*lbf)

If the result is not as specified, adjust the preload.

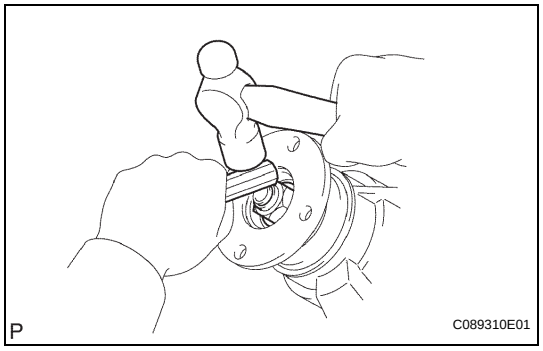

8. STAKE DRIVE PINION NUT

(a) Using a chisel and hammer, stake the nut.

9. INSTALL REAR PROPELLER SHAFT ASSEMBLY (for 2WD) (See page PR-14)

10. INSTALL PROPELLER SHAFT ASSEMBLY (for 4WD) (See page PR-14)

11. ADD DIFFERENTIAL OIL (See page DF-3)

12. CHECK FOR DIFFERENTIAL OIL LEAKAGE

FRONT DIFFERENTIAL SIDE GEAR SHAFT OIL SEAL

COMPONENTS

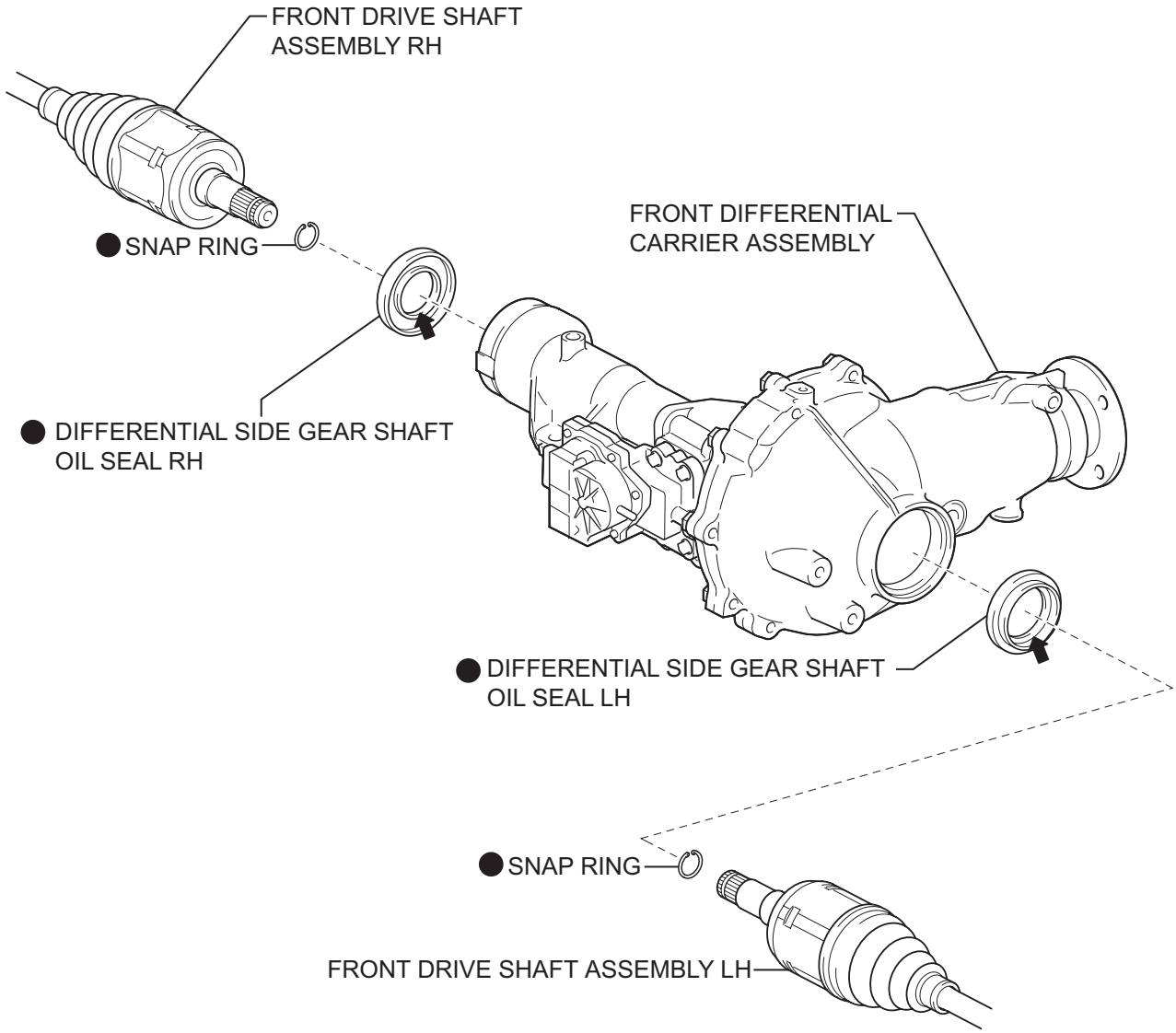

● Non-reusable part ⬅ MP grease

P C113271E02

DF

REMOVAL

HINT:
The procedure described below is for the LH side. Use the same procedure for both the RH and LH sides, unless otherwise specified.

1. **REMOVE FRONT DRIVE SHAFT ASSEMBLY LH**
   (See page DS-3)

2. **REMOVE DIFFERENTIAL SIDE GEAR SHAFT OIL SEAL**
   (a) Using SST, tap out the oil seal.
   SST 09308-10010

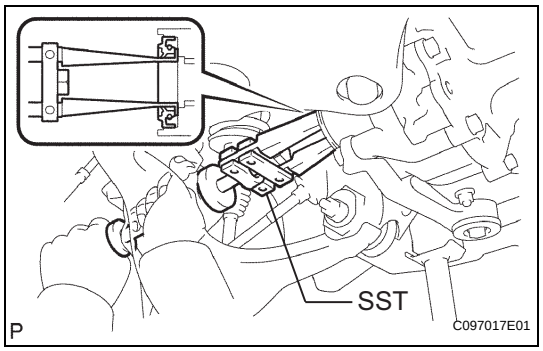

INSTALLATION

HINT:
The procedure described below is for the RH side. Use the same procedure for both the LH and RH sides, unless otherwise specified.

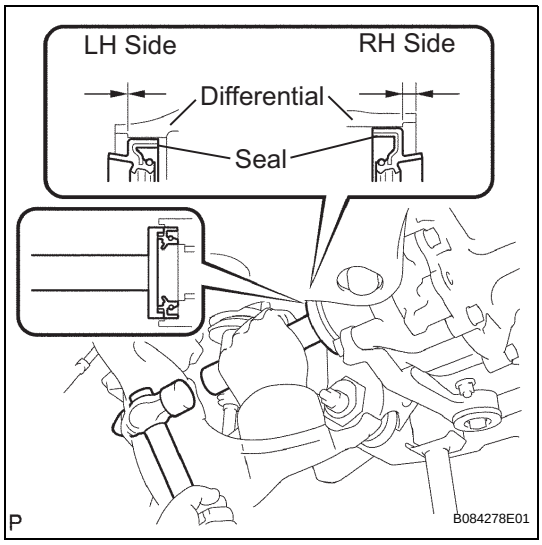

1. INSTALL DIFFERENTIAL SIDE GEAR SHAFT OIL SEAL

(a) Apply MP grease to 2 new oil seals.

(b) Using SST and a hammer, tap in the 2 oil seals.

NOTICE:
Make sure the LH and RH oil seals are installed in the proper locations.

SST 09550-00032, 09950-70010 (09951-07100)

Oil seal depth

Side	Oil Seal Depth
LH side	-0.45 to 0.45 mm (-0.118 to 0.118 in.)
RH side	4.8 to 5.8 mm (0.189 to 0.229 in.)

2. INSTALL FRONT DRIVE SHAFT ASSEMBLY LH

(See page DS-9)

FRONT DIFFERENTIAL CARRIER ASSEMBLY

COMPONENTS

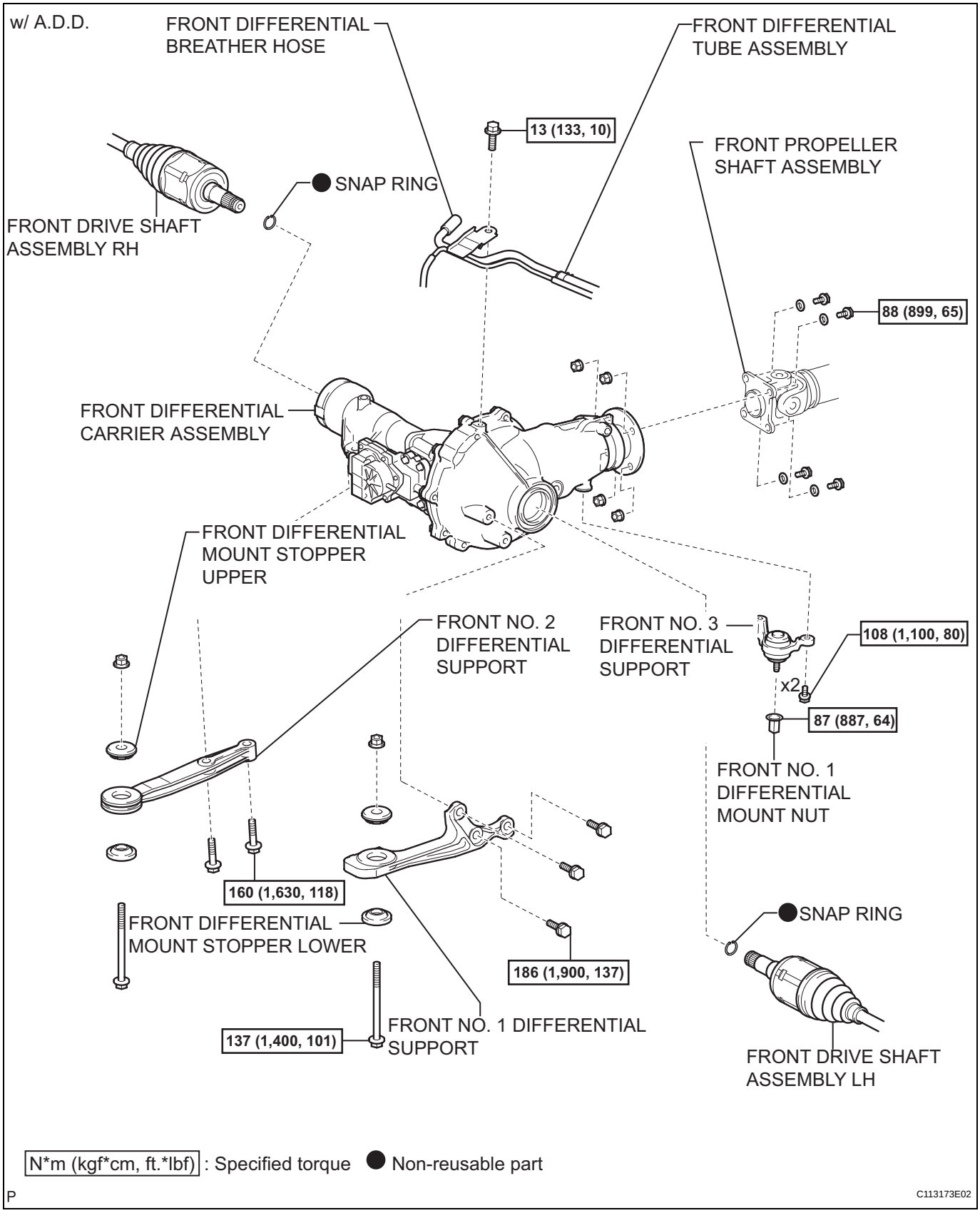

DF

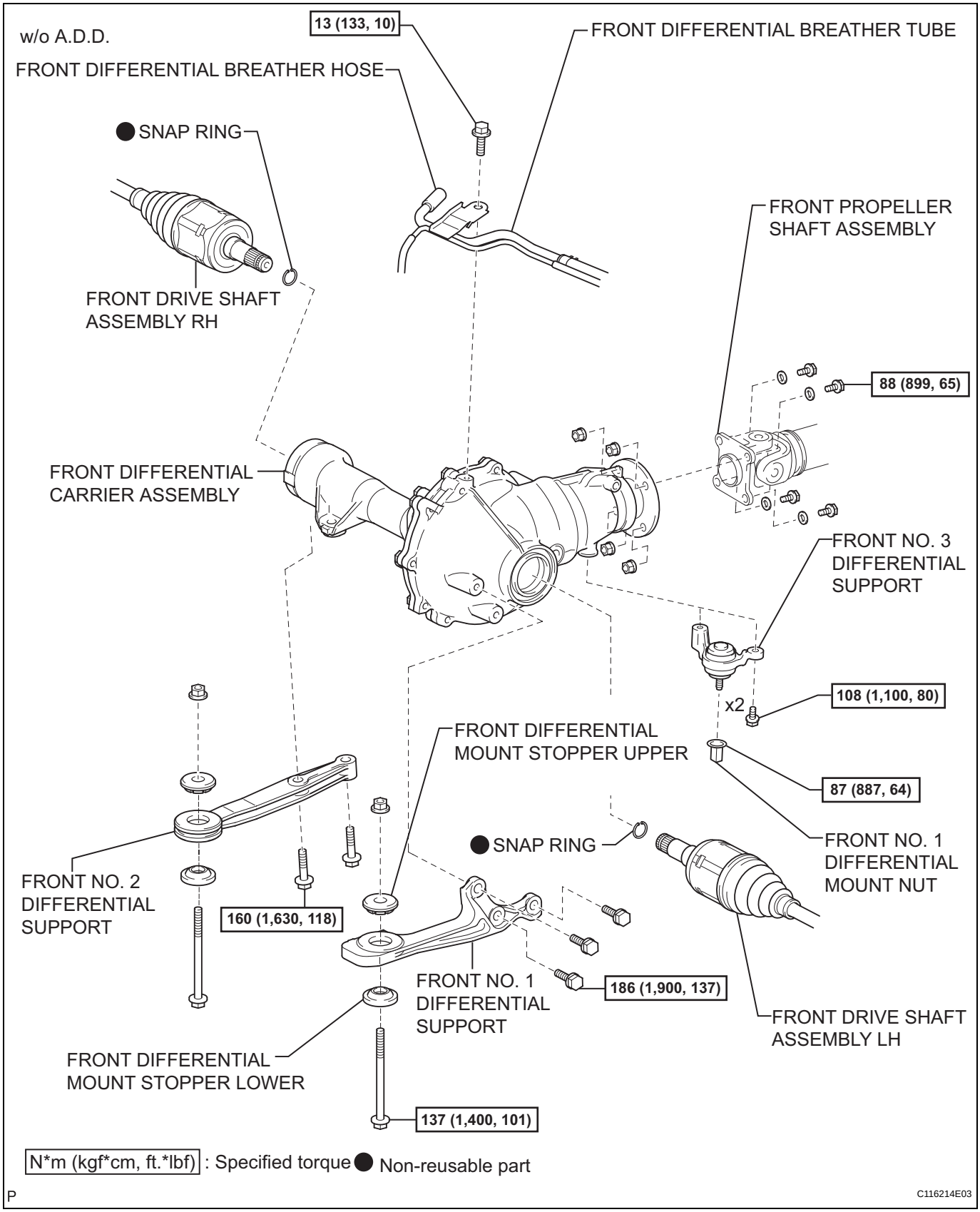
w/o A.D.D.
13 (133, 10)
FRONT DIFFERENTIAL BREATHER TUBE
FRONT DIFFERENTIAL BREATHER HOSE
SNAP RING
FRONT PROPELLER SHAFT ASSEMBLY
FRONT DRIVE SHAFT ASSEMBLY RH
88 (899, 65)
FRONT DIFFERENTIAL CARRIER ASSEMBLY
FRONT NO. 3 DIFFERENTIAL SUPPORT
x2
108 (1,100, 80)
FRONT DIFFERENTIAL MOUNT STOPPER UPPER
87 (887, 64)
SNAP RING
FRONT NO. 1 DIFFERENTIAL MOUNT NUT
FRONT NO. 2 DIFFERENTIAL SUPPORT
160 (1,630, 118)
FRONT NO. 1 DIFFERENTIAL SUPPORT
186 (1,900, 137)
FRONT DRIVE SHAFT ASSEMBLY LH
FRONT DIFFERENTIAL MOUNT STOPPER LOWER
137 (1,400, 101)
N*m (kgf*cm, ft.*lbf) : Specified torque
Non-reusable part
P
C116214E03

DF

w/ A.D.D.

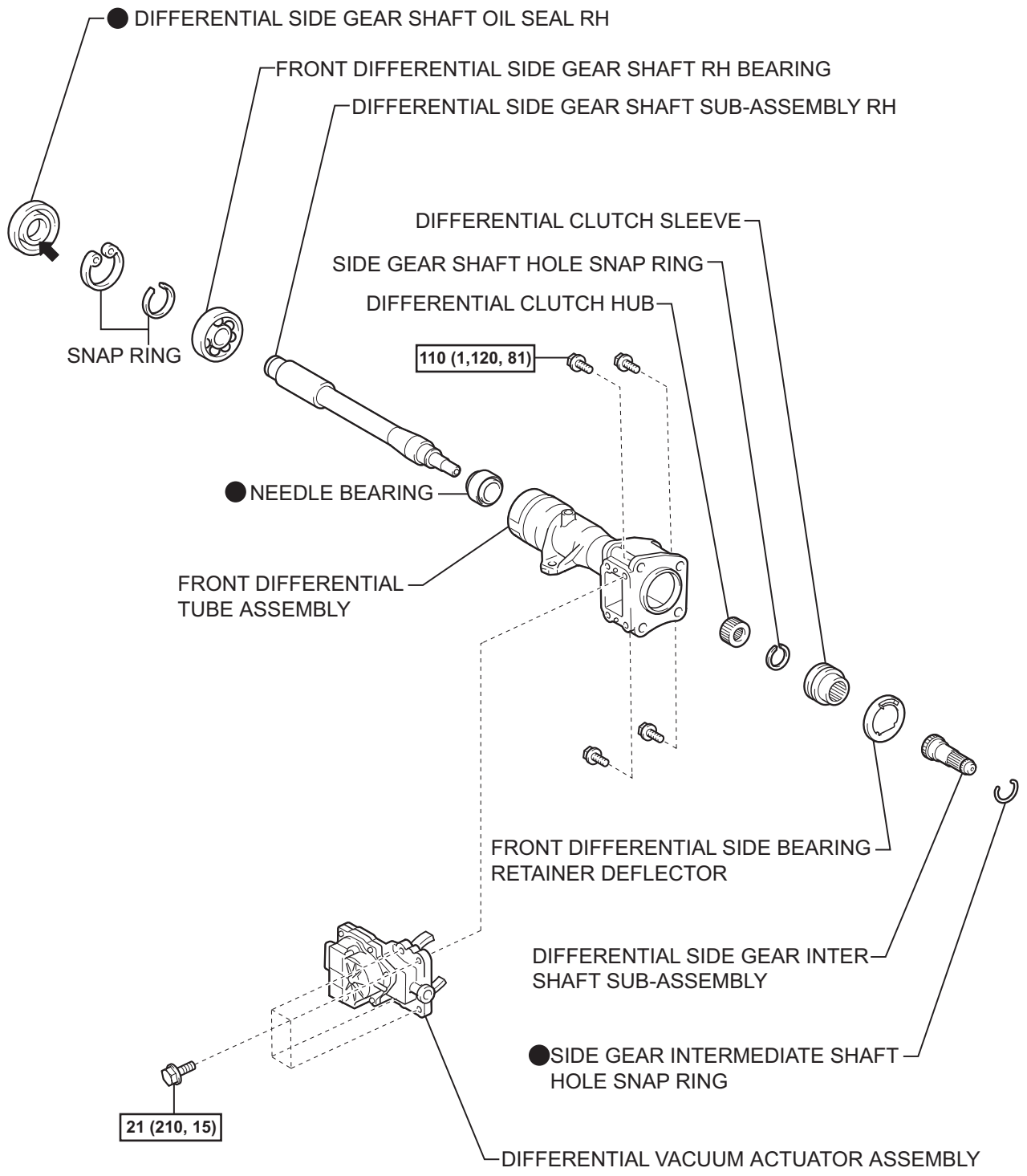

DF

N*m (kgf*cm, ft.*lbf) : Specified torque

● Non-reusable part ⬅ MP grease

P

C113174E02

w/o A.D.D.

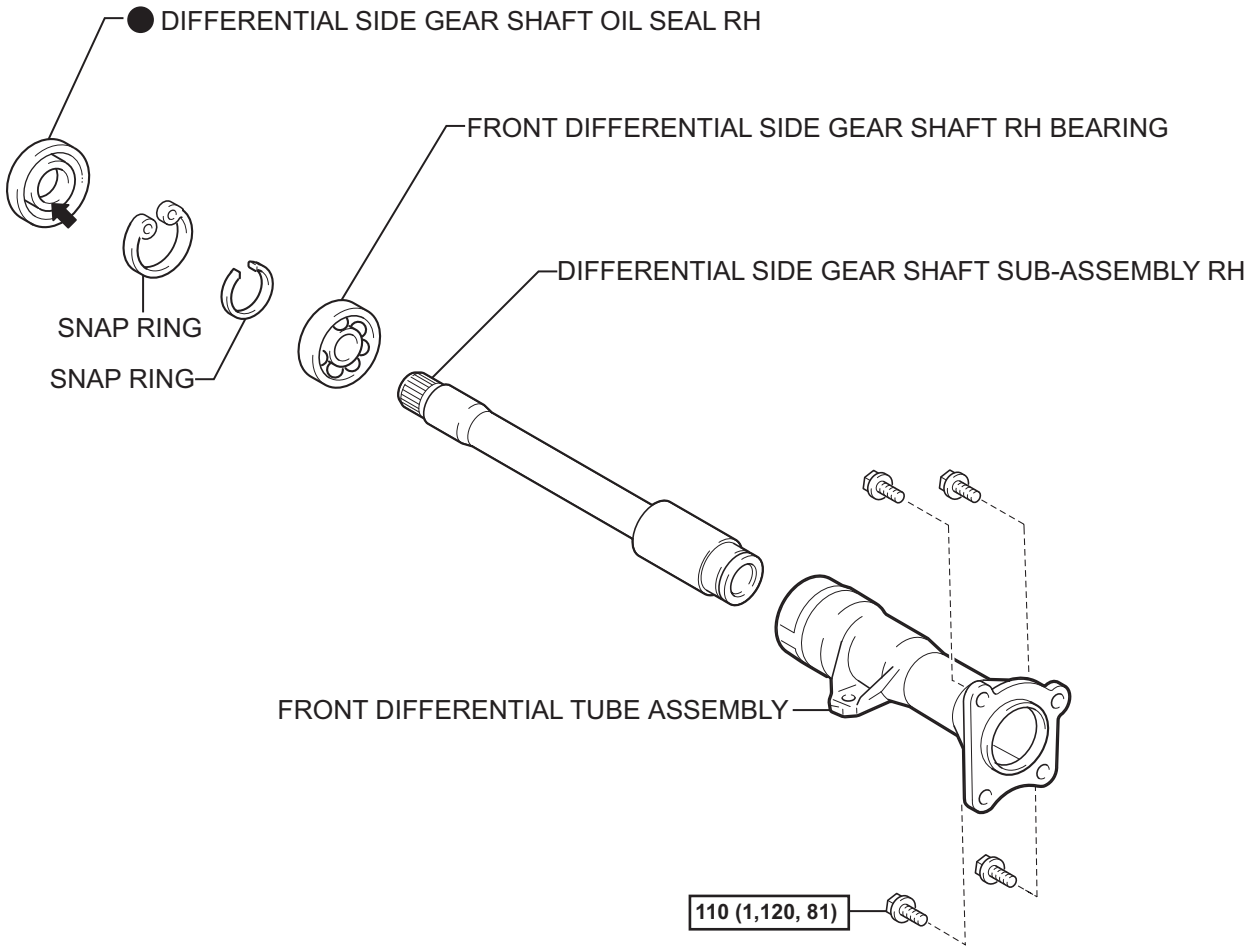

N*m (kgf*cm, ft.*lbf) : Specified torque

● Non-reusable part ⬅ MP grease

P

C116213E03

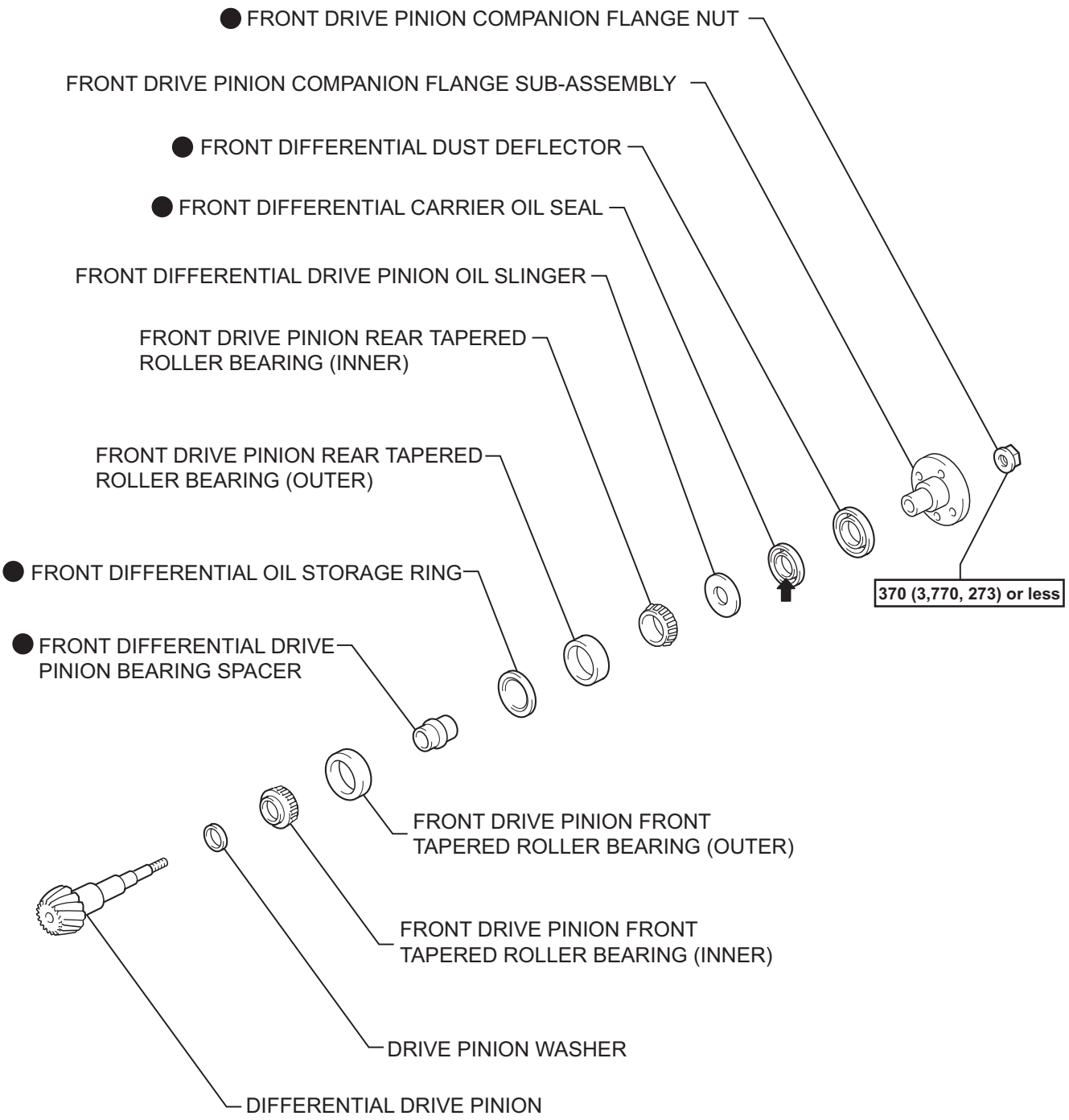

DF

N*m (kgf*cm, ft.*lbf) : Specified torque

● Non-reusable part ⬅ MP grease

P

C113175E02

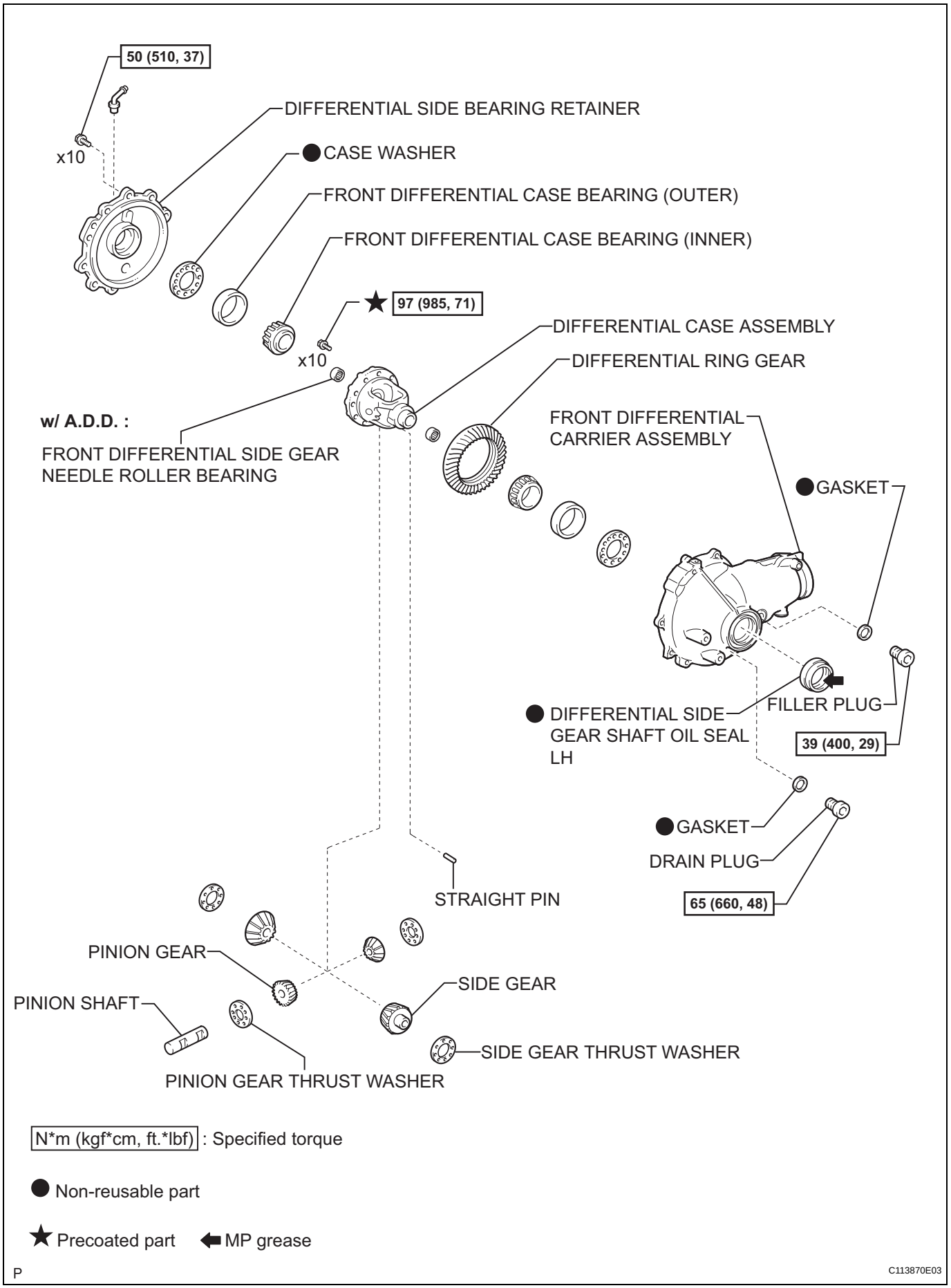
50 (510, 37)
DIFFERENTIAL SIDE BEARING RETAINER
x10
● CASE WASHER
FRONT DIFFERENTIAL CASE BEARING (OUTER)
FRONT DIFFERENTIAL CASE BEARING (INNER)
★ 97 (985, 71)
x10
DIFFERENTIAL CASE ASSEMBLY
DIFFERENTIAL RING GEAR
w/ A.D.D. :
FRONT DIFFERENTIAL SIDE GEAR NEEDLE ROLLER BEARING
FRONT DIFFERENTIAL CARRIER ASSEMBLY
● GASKET
● DIFFERENTIAL SIDE GEAR SHAFT OIL SEAL LH
FILLER PLUG
39 (400, 29)
● GASKET
DRAIN PLUG
65 (660, 48)
STRAIGHT PIN
PINION GEAR
PINION SHAFT
SIDE GEAR
SIDE GEAR THRUST WASHER
PINION GEAR THRUST WASHER
N*m (kgf*cm, ft.*lbf) : Specified torque
● Non-reusable part
★ Precoated part
⬅ MP grease
P
C113870E03

DF

REMOVAL

1. **DISCONNECT CABLE FROM NEGATIVE BATTERY TERMINAL**
2. **REMOVE FRONT WHEEL**
3. **REMOVE NO.1 ENGINE UNDER COVER SUB-ASSEMBLY**
4. **REMOVE REAR ENGINE UNDER COVER ASSEMBLY**
5. **DRAIN DIFFERENTIAL OIL**
6. **REMOVE FRONT PROPELLER SHAFT ASSEMBLY (See page PR-2)**
7. **SEPARATE SPEED SENSOR FRONT LH (See page DS-3)**
8. **SEPARATE FRONT SPEED SENSOR RH**
   HINT:
   Use the same procedure as for the RH side.
9. **REMOVE FRONT AXLE HUB GREASE CAP LH (See page DS-3)**
10. **REMOVE FRONT AXLE HUB GREASE CAP RH**
    HINT:
    Use the same procedure as for the RH side.
11. **SEPARATE TIE ROD END SUB-ASSEMBLY LH (See page DS-3)**
12. **SEPARATE TIE ROD END SUB-ASSEMBLY RH**
13. **SEPARATE FRONT LOWER BALL JOINT ATTACHMENT (See page DS-4)**
14. **REMOVE FRONT AXLE HUB NUT LH (See page DS-3)**
15. **REMOVE FRONT AXLE HUB NUT RH**
    HINT:
    Use the same procedure as for the RH side.
16. **REMOVE FRONT DRIVE SHAFT ASSEMBLY LH (See page DS-4)**
17. **REMOVE FRONT DRIVE SHAFT ASSEMBLY RH**
    HINT:
    Use the same procedure as for the RH side.
18. **REMOVE FRONT DIFFERENTIAL CARRIER ASSEMBLY**
    (a) Remove the bolt and disconnect the differential breather tube bracket.
    (b) Support the differential with a jack.
    (c) Remove the No. 1 differential mounting nut.
    (d) Remove the 2 mounting bolts and 2 nuts.
    (e) Lower the jack and remove the front differential.

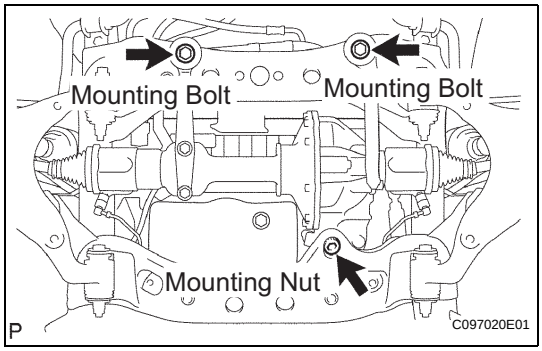

DF

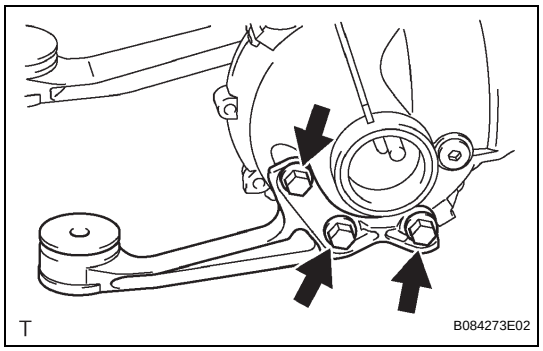

(f) Remove the 3 bolts and front No. 1 differential support.

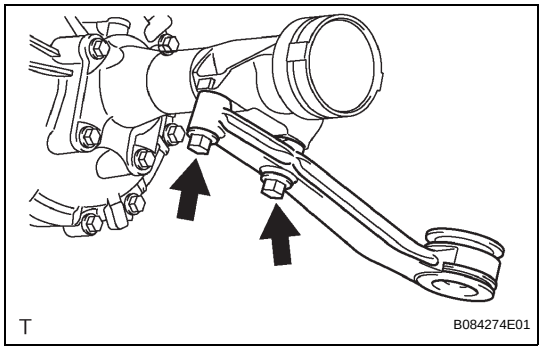

(g) Remove the 2 bolts and front No. 2 differential support.

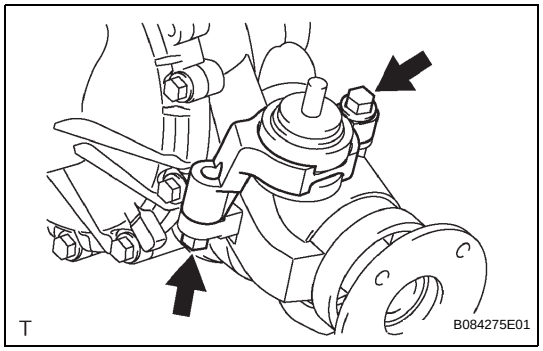

(h) Remove the 2 bolts and front No. 3 differential support.

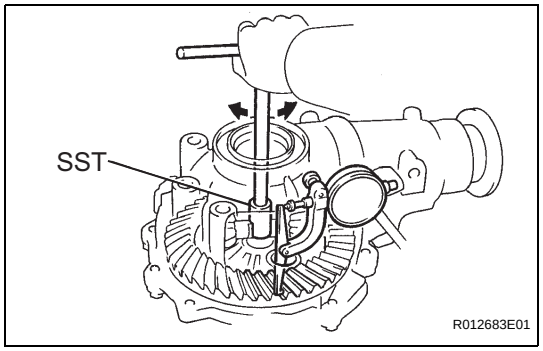

DISASSEMBLY

1. INSPECT DIFFERENTIAL RING GEAR BACKLASH

(a) Using SST and a dial indicator, measure the ring gear backlash.

SST 09564-32011

Standard:

0.11 to 0.21 mm (0.0043 to 0.0083 in.)

If the backlash is not as specified, adjust the side bearing preload or repair as necessary.

HINT:

Perform the measurements at 3 or more positions around the side bearing preload.

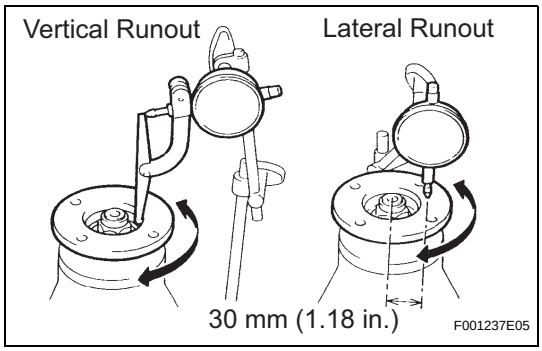

2. INSPECT FRONT DRIVE PINION COMPANION FLANGE SUB-ASSEMBLY

(a) Using a dial indicator, measure the runout of the companion flange vertically and laterally.

Maximum runout

Runout	Maximum
Vertical runout	0.10 mm (0.0039 in.)
Lateral runout	0.10 mm (0.0039 in.)

If the runout is greater than the maximum, replace the companion flange.

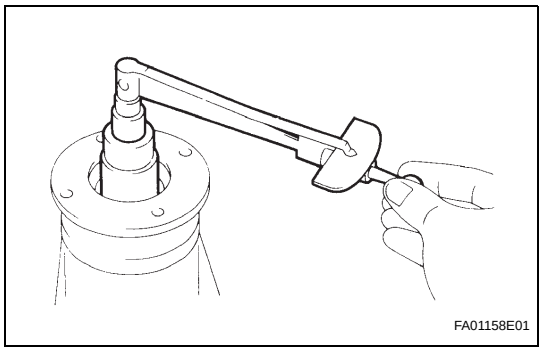

3. INSPECT DRIVE PINION PRELOAD

(a) Using a torque wrench, measure the preload of the backlash between the drive pinion and ring gear.

HINT:

Bolts without torque specifications are shown in the service data (see page SS-43).

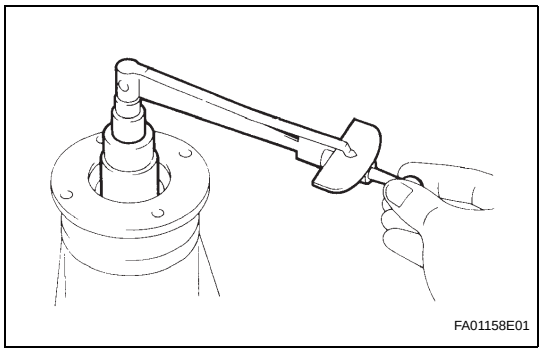

4. INSPECT TOTAL PRELOAD

(a) Using a torque wrench, measure the preload with the teeth of the drive pinion and ring gear in contact.

HINT:

Bolts without torque specifications are shown in the service data (see page SS-43).

If necessary, disassemble and inspect the differential.

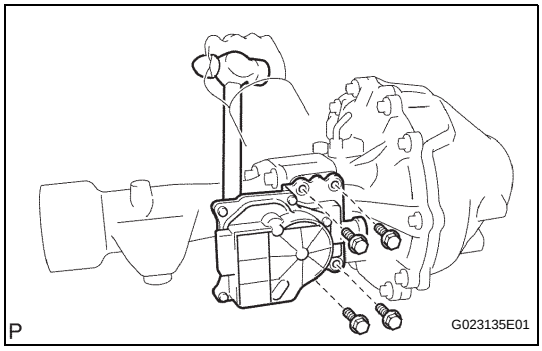

5. REMOVE DIFFERENTIAL VACUUM ACTUATOR ASSEMBLY

(a) Remove the 4 bolts.

(b) Using a hammer, pry out the actuator from the differential tube.

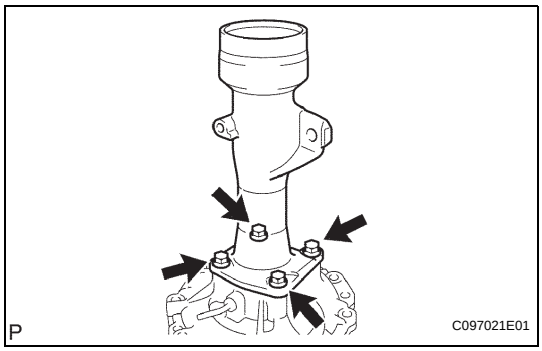

6. REMOVE FRONT DIFFERENTIAL TUBE ASSEMBLY

(a) Remove the 4 bolts.

(b) Using a plastic-faced hammer, tap out the differential tube.

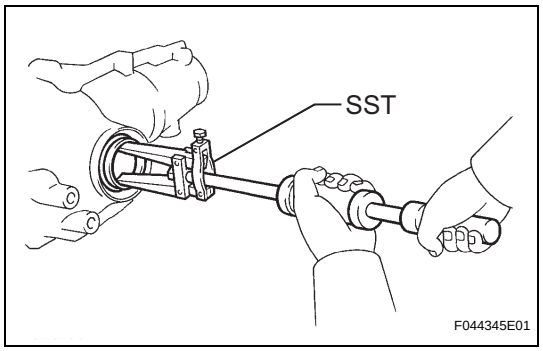

7. REMOVE DIFFERENTIAL SIDE GEAR SHAFT OIL SEAL

(a) Using SST, tap out the oil seal.
SST 09308-00010

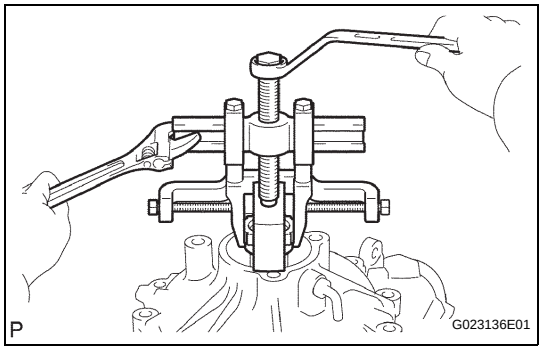

8. REMOVE DIFFERENTIAL SIDE GEAR INTER SHAFT SUB-ASSEMBLY

(a) Using SST, remove the inter shaft.
SST 09350-20015 (09369-20040), 09950-40011 (09951-04010, 09952-04010, 09953-04020, 09954-04010, 09955-04011, 09957-04010, 09958-04011)

(b) Remove the snap ring from the inter shaft.

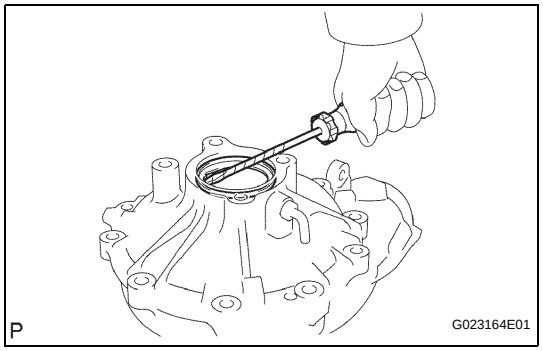

9. REMOVE FRONT DIFFERENTIAL SIDE BEARING RETAINER DEFLECTOR

(a) Using a screwdriver with its tip wrapped in protective tape, pry out the bearing retainer deflector.

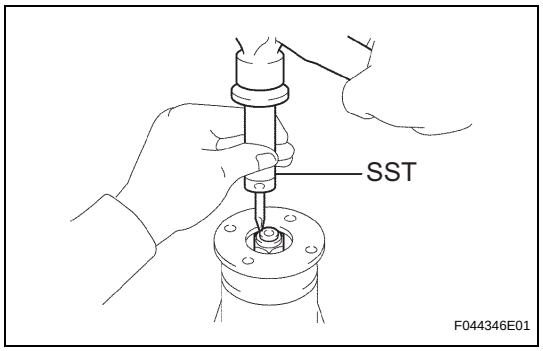

10. REMOVE FRONT DRIVE PINION COMPANION FLANGE NUT

(a) Using SST and a hammer, loosen the staked part of the nut.
SST 09930-00010

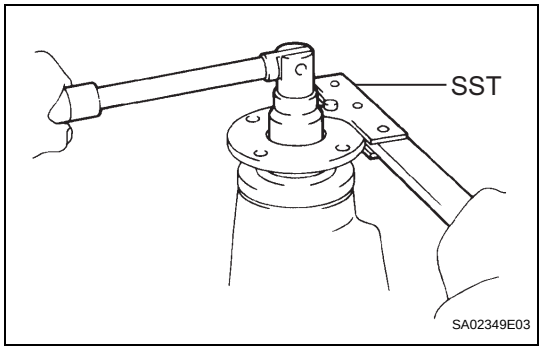

(b) Using SST to hold the companion flange in place, remove the nut.
SST 09330-00021

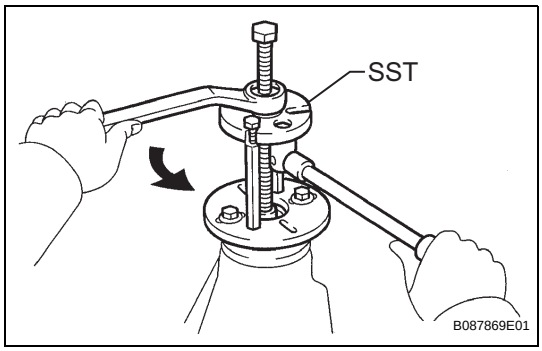

11. REMOVE FRONT DRIVE PINION COMPANION FLANGE SUB-ASSEMBLY

(a) Using SST, remove the companion flange.

SST 09950-30012 (09951-03010, 09953-03010, 09954-03010, 09955-03030, 09956-03020)

NOTICE:

Before using SST (center bolt), apply hypoid gear oil to its threads and tip.

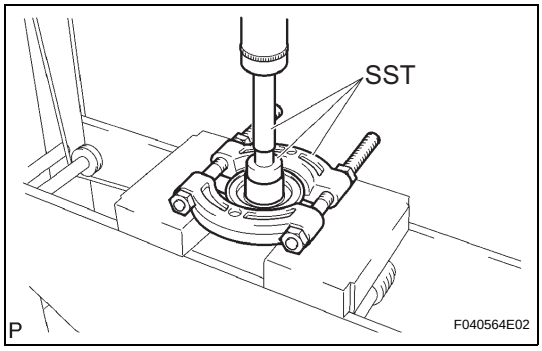

12. REMOVE FRONT DIFFERENTIAL DUST DEFLECTOR

(a) Using SST and a press, press out the dust deflector.

SST 09950-00020, 09950-60010 (09951-00510), 09950-70010 (09951-07150)

NOTICE:

Do not drop the companion flange.

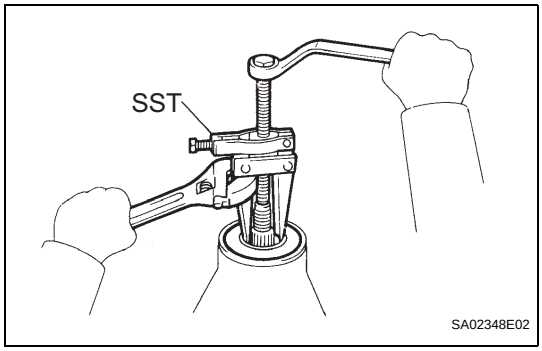

13. REMOVE REAR DIFFERENTIAL CARRIER OIL SEAL

(a) Using SST, remove the oil seal from the differential carrier.

SST 09308-10010

14. REMOVE FRONT DIFFERENTIAL DRIVE PINION OIL SLINGER

(a) Remove the oil slinger from the drive pinion.

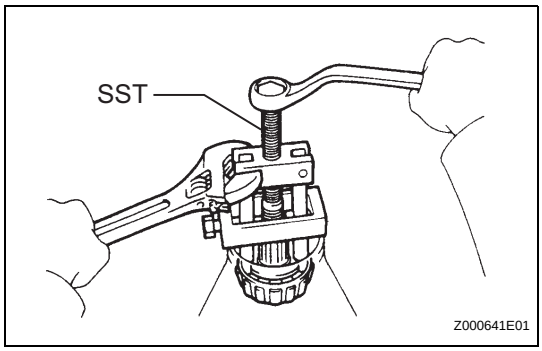

15. REMOVE FRONT DRIVE PINION REAR TAPERED ROLLER BEARING

(a) Using SST, remove the roller bearing (inner) from the drive pinion.

SST 09556-22010

(b) Remove the bearing spacer.

16. REMOVE DIFFERENTIAL SIDE BEARING RETAINER

(a) Remove the 10 bolts and tap out the retainer with a plastic-faced hammer.

17. REMOVE DIFFERENTIAL CASE ASSEMBLY

18. REMOVE DIFFERENTIAL DRIVE PINION

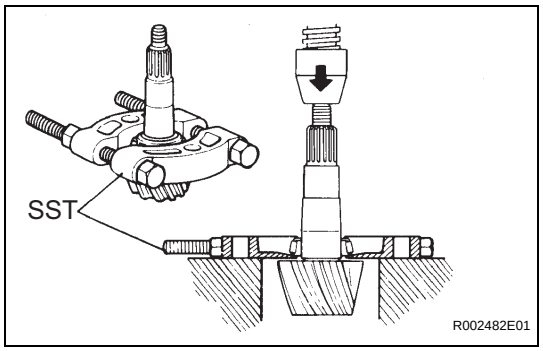

19. REMOVE FRONT DRIVE PINION FRONT TAPERED ROLLER BEARING

(a) Using SST and a press, press out the roller bearing (inner) from the drive pinion.

SST 09950-00020

NOTICE:

Do not drop the drive pinion.

HINT:

If the drive pinion or ring gear is damaged, replace them as a set.

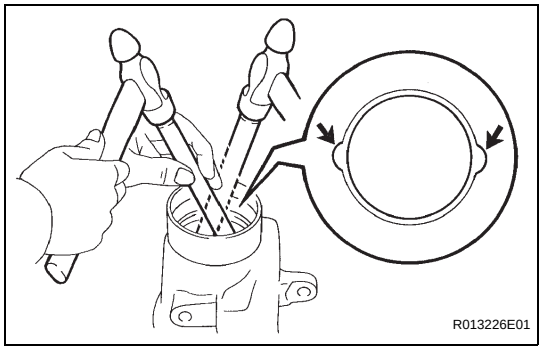

20. REMOVE FRONT DRIVE PINION FRONT TAPERED ROLLER BEARING

(a) Using a brass bar and hammer, tap out the roller bearing (outer).

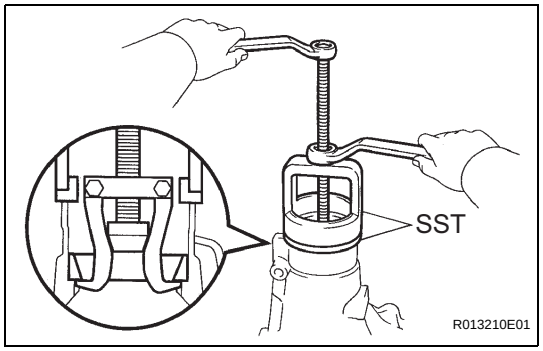

21. REMOVE FRONT DRIVE PINION REAR TAPERED ROLLER BEARING

(a) Using SST, remove the roller bearing (outer).

SST 09502-12010, 09612-65014 (09612-01020, 09612-01050)

22. REMOVE FRONT DIFFERENTIAL OIL STORAGE RING

(a) Using a brass bar and hammer, tap out the oil storage ring.

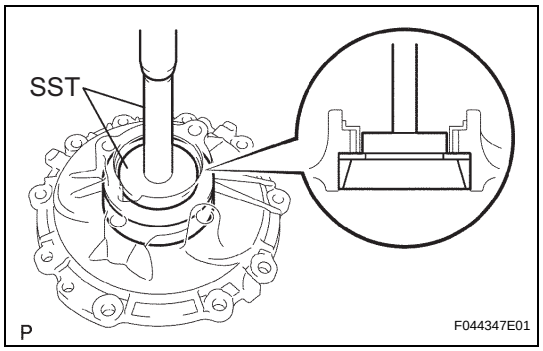

23. REMOVE FRONT DIFFERENTIAL CASE BEARING

HINT:

- Measure the thickness of the case washer.
- Tag the bearing outer races to show the location for reassembly.

(a) Using SST and a press, press out the case bearing (outer race) and plate washer from the bearing retainer.

SST 09950-60020 (09951-00680), 09950-70010 (09951-07150)

If the bearing is damaged during removal, replace it.

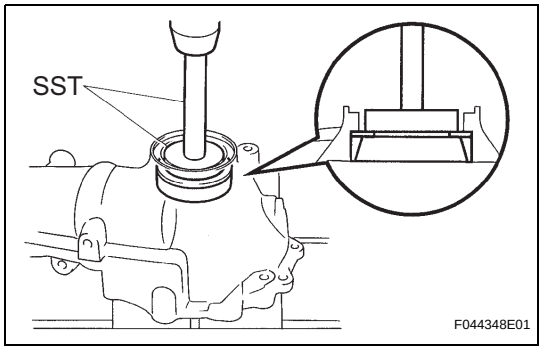

(b) Using SST and a press, press out the case bearing (outer race) and plate washer from the differential carrier.

SST 09950-60020 (09951-00680), 09950-70010 (09951-07150)

If the bearing is damaged during removal, replace it.

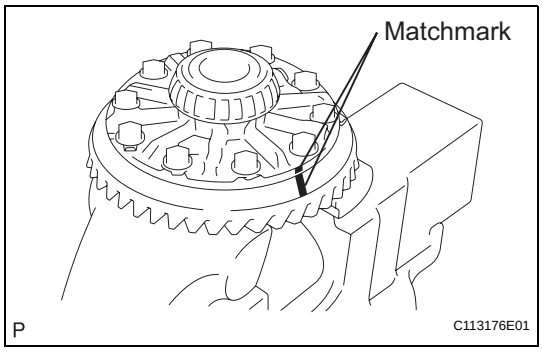

24. REMOVE DIFFERENTIAL RING GEAR

(a) Place matchmarks on the ring gear and differential case.

(b) Remove the 10 ring gear set bolts.

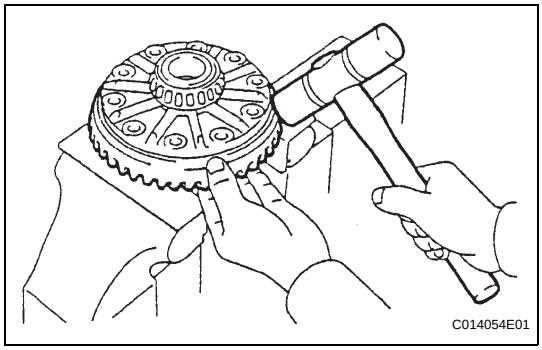

(c) Using a plastic-faced hammer, tap on the ring gear to separate it from the differential case.

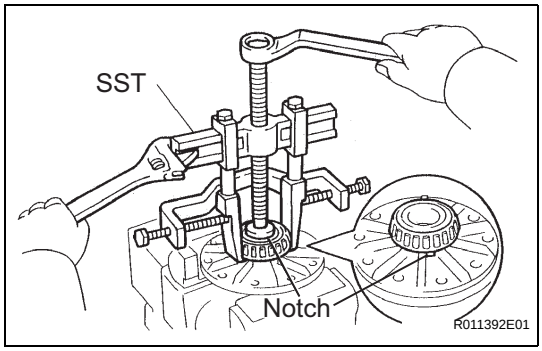

25. REMOVE FRONT DIFFERENTIAL CASE BEARING

HINT:

The differential case and case bearings should only be removed when replacement is necessary.

(a) Using SST, remove the 2 case bearings (inner) from the differential case.

SST 09950-60010 (09951-00480), 09950-40011 (09951-04020, 09952-04010, 09953-04030, 09954-04010, 09955-04061, 09953-04020, 09958-04011)

HINT:

Fix the claws of SST to the notch in the differential case assembly.

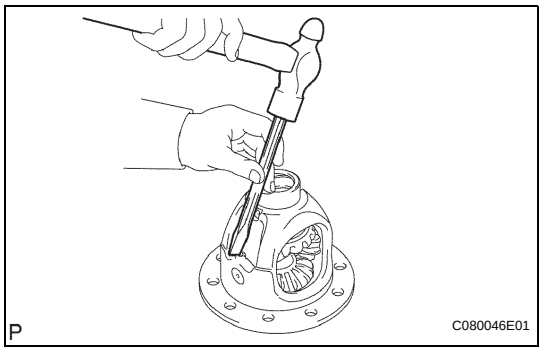

26. DISASSEMBLE DIFFERENTIAL CASE

(a) Using a chisel and hammer, unstake the differential case.

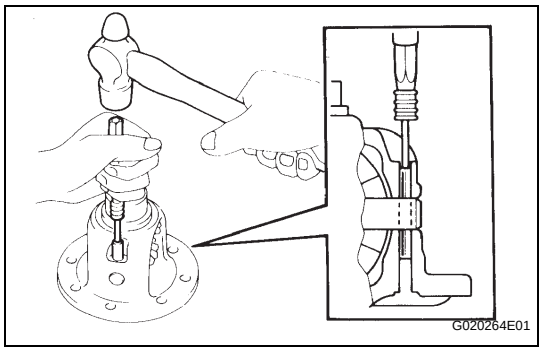

(b) Using a pin punch and hammer, tap out the straight pin.

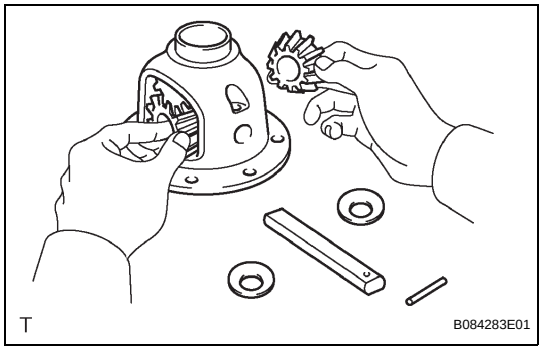

(c) Remove the following parts from the differential case.

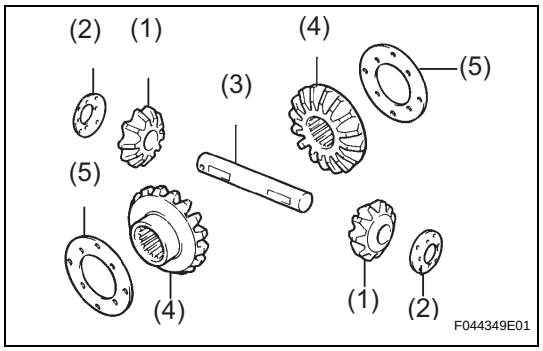

(1) Differential pinion gear (2 pieces)
(2) Differential pinion gear thrust washer (2 pieces)
(3) Differential pinion shaft
(4) Differential side gear (2 pieces)
(5) Differential side gear thrust washer (2 pieces)

27. INSPECT DIFFERENTIAL GEAR KIT

(a) Check that the differential pinion and differential side gear are not damaged.
If the differential pinion or differential side gear is damaged, replace the differential gear kit.

28. INSPECT FRONT DIFFERENTIAL CASE

(a) Check that the differential case is not damaged.
If the differential case is damaged, replace it.

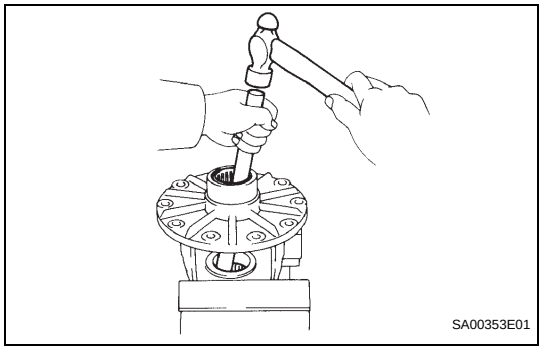

29. REMOVE FRONT DIFFERENTIAL SIDE GEAR NEEDLE ROLLER BEARING

(a) Using a brass bar and hammer, tap out the 2 bearings.

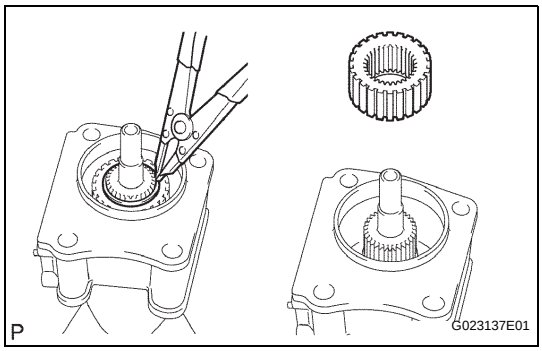

30. REMOVE DIFFERENTIAL CLUTCH HUB

(a) Using a snap ring expander, remove the snap ring.

(b) Remove the differential clutch hub.

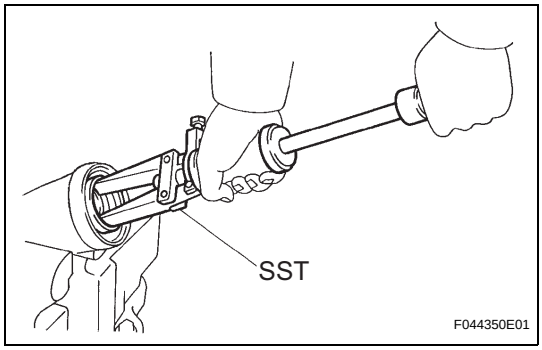

31. REMOVE DIFFERENTIAL SIDE GEAR SHAFT OIL SEAL

(a) Using SST, tap out the oil seal from the differential tube.

SST 09308-00010

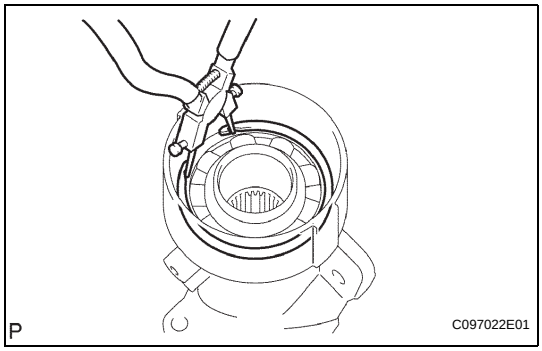

32. REMOVE DIFFERENTIAL SIDE GEAR SHAFT SUB-ASSEMBLY RH

(a) Using a snap ring expander, remove the snap ring.

(b) Remove the shaft from the differential tube.

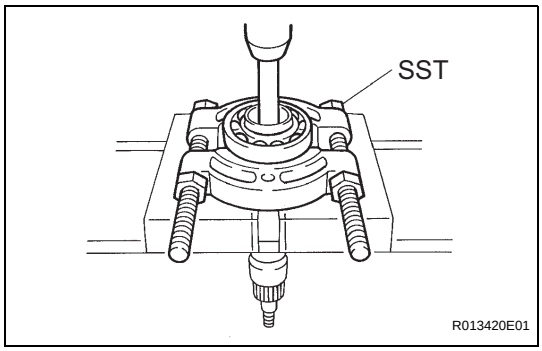

33. REMOVE FRONT DIFFERENTIAL SIDE GEAR SHAFT RH BEARING

(a) Using a snap ring expander, remove the snap ring.

(b) Using SST, a brass bar and a press, press out the shaft RH bearing.

SST 09950-00020

NOTICE:

- **Do not damage the bearing.**
- **Do not drop the shaft.**

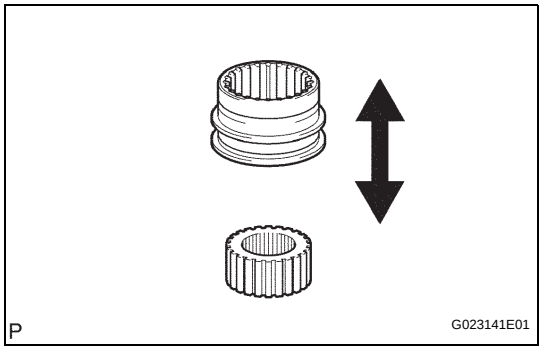

34. INSPECT DIFFERENTIAL CLUTCH SLEEVE AND DIFFERENTIAL CLUTCH HUB

(a) Check that there is no wear or damage on the clutch hub and clutch sleeve.
Replace parts as necessary.

(b) Check that the clutch sleeve slides smoothly on the clutch hub.
Replace parts as necessary.

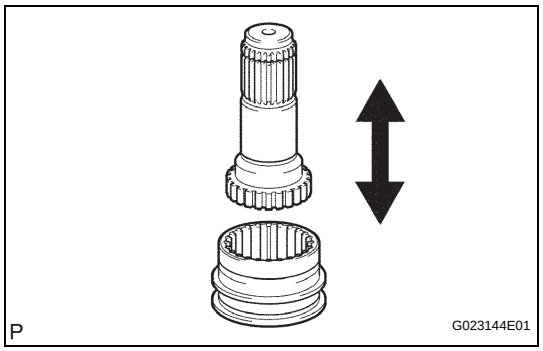

35. INSPECT DIFFERENTIAL CLUTCH SLEEVE AND DIFFERENTIAL SIDE GEAR INTER SHAFT

(a) Check that there is no wear or damage on the clutch sleeve and side gear inter shaft.
Replace parts as necessary.

(b) Check that the clutch sleeve slides smoothly on the side gear inter shaft.
Replace parts as necessary.

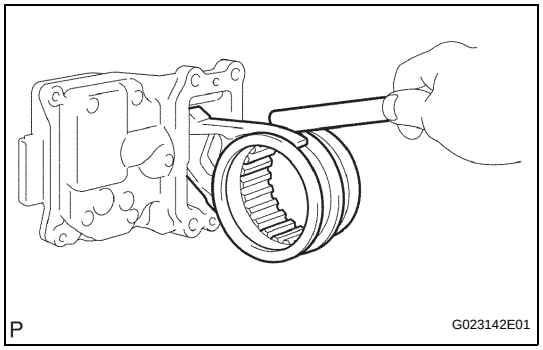

36. INSPECT DIFFERENTIAL CLUTCH SLEEVE AND CLUTCH SLEEVE FORK CLEARANCE

(a) Using a feeler gauge, measure the clearance between the sleeve fork and clutch sleeve.
Maximum clearance:
0.15 to 0.35 mm (0.0059 to 0.0138 in.)
If the clearance is greater than the maximum, replace the fork or clutch sleeve.

REASSEMBLY

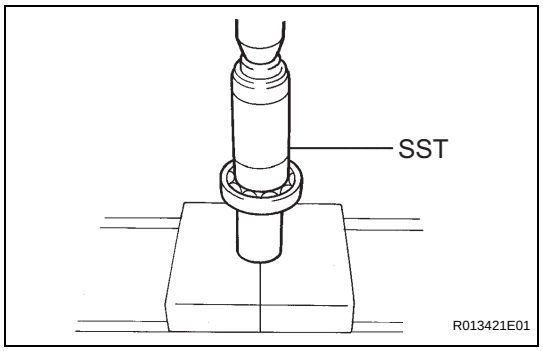

1. INSTALL FRONT DIFFERENTIAL SIDE GEAR SHAFT RH BEARING

(a) Using SST and a press, press in the shaft bearing.
SST 09223-00010

(b) Using a snap ring expander, install the snap ring.
HINT:
Install the snap ring securely.

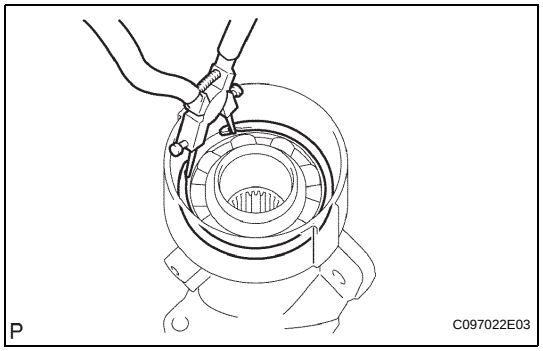

2. INSTALL DIFFERENTIAL SIDE GEAR SHAFT SUB-ASSEMBLY RH

(a) Install the shaft into the differential tube.

(b) Using needle nose pliers, install the snap ring.
HINT:
Install the snap ring securely.

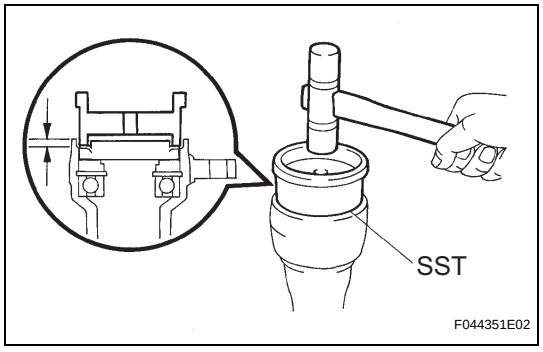

3. INSTALL DIFFERENTIAL SIDE GEAR SHAFT OIL SEAL

(a) Coat the lip of a new oil seal with MP grease.
Oil seal depth:
4.8 to 5.8 mm (0.189 to 0.229in.)

(b) Using SST and a plastic-faced hammer, tap in the oil seal.
SST 09223-15020

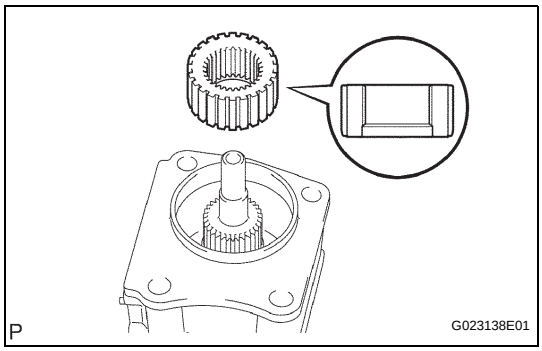

4. INSTALL DIFFERENTIAL CLUTCH HUB

(a) Install the clutch hub onto the side gear inter shaft.

(b) Using snap ring pliers, install the snap ring.

HINT:

Install the snap ring securely.

NOTICE:

Install the differential clutch hub in the correct direction.

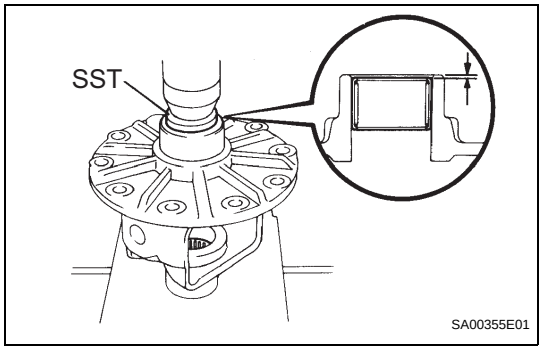

5. INSTALL FRONT DIFFERENTIAL SIDE GEAR NEEDLE ROLLER BEARING

(a) Using SST and a press, press in 2 new bearings.

SST 09950-60010 (09951-00380)

Needle roller bearing depth:

1.4 to 2.0mm (0.055 to 0.079in.)

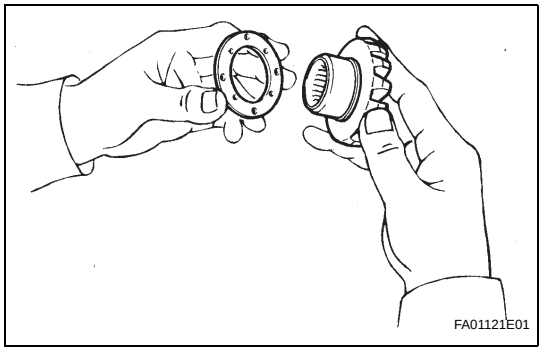

6. ASSEMBLE DIFFERENTIAL CASE

(a) Install the 2 thrust washers onto the 2 side gears.

HINT:

Using the table below, select 2 thrust washers which will ensure that the backlash is within the specifications.

Thrust washer thickness

Thickness mm (in.)	Thickness mm (in.)
1.48 to 1.52 (0.0583 to 0.0598)	1.73 to 1.77 (0.0681 to 0.0697)
1.53 to 1.57 (0.0602 to 0.0618)	1.78 to 1.82 (0.0701 to 0.0717)
1.58 to 1.62 (0.0622 to 0.0638)	1.83 to 1.87 (0.0720 to 0.0736)
1.63 to 1.67 (0.0642 to 0.0657)	1.88 to 1.92 (0.0740 to 0.0756)
1.68 to 1.72 (0.0661 to 0.0677)	-

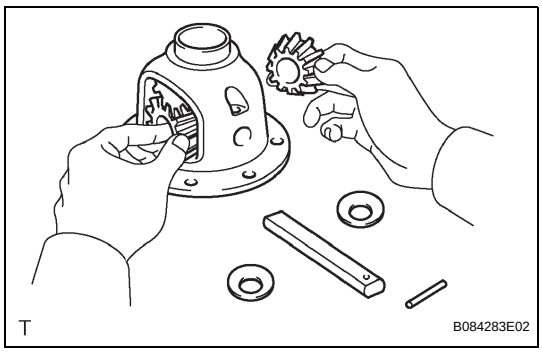

(b) Install the 2 side gears, 2 pinion gears, 2 side gear thrust washers, 2 pinion thrust washers and pinion shaft into the differential case.

HINT:

Align the holes of the differential case and pinion shaft.

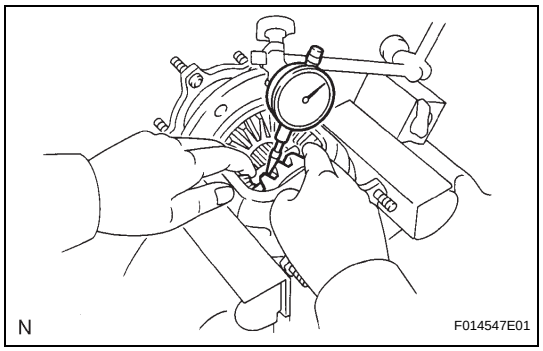

(c) Measure the side gear backlash.
  (1) Using a dial indicator, measure the side gear backlash while holding one pinion gear toward the differential case.
  Backlash:
  0.15 mm (0.0059 in.) or less
  If the backlash is not as specified, install 2 side gear thrust washers with different thicknesses.

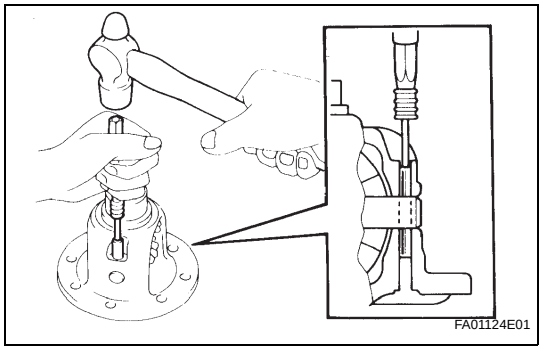

(d) Using a pin punch and hammer, tap in the straight pin through the differential case and hole of the pinion shaft.
(e) Stake the differential case.

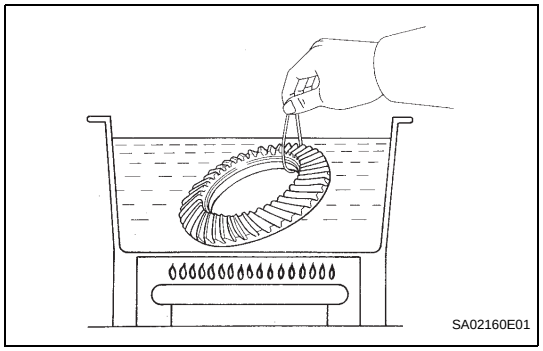

7. INSTALL DIFFERENTIAL RING GEAR
(a) Clean the contact surface of the differential case and ring gear.
(b) Heat the ring gear in water that is approximately 100°C (212°F).
(c) Carefully remove the ring gear from the boiling water.
(d) After the moisture on the ring gear has completely evaporated, quickly install the ring gear onto the differential case.

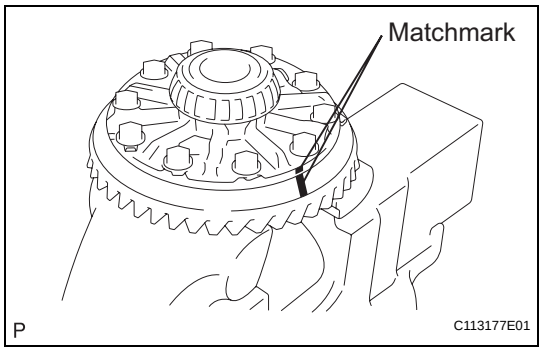

(e) Align the matchmarks on the ring gear with those of the differential case.
(f) After the ring gear cools down, apply thread lock adhesive to the 10 set bolts and install them.
Thread lock:
Part No. 08833-00100, THREE BOND 1360k or the equivalent.
Torque: 115 N*m (1,173 kgf*cm, 85 ft.*lbf)

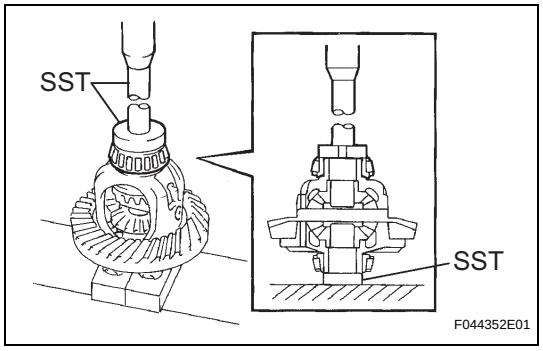

8. INSTALL FRONT DIFFERENTIAL CASE BEARING
(a) Using SST and a press, press the bearing into the differential case.
SST 09950-60010 (09951-00520, 09951-00610), 09950-70010 (09951-07150)

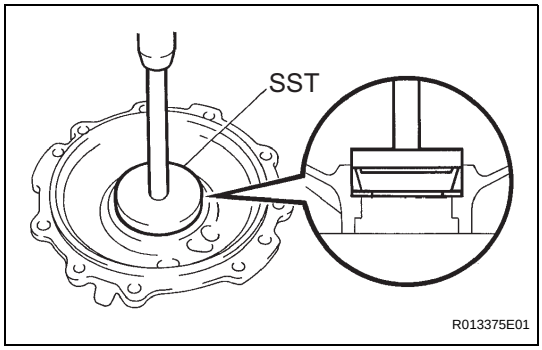

9. INSTALL FRONT DIFFERENTIAL CASE BEARING

HINT:

When replacing the 3 differential case bearings, fit the 2 thinnest new washers onto each bearing. When reusing the bearings, fit the new washers into the same places they were removed from.

(a) Using SST and a press, press the case bearing (outer race) into the differential case bearing retainer.

SST 09950-60020 (09951-00810), 09950-70010 (09951-07150)

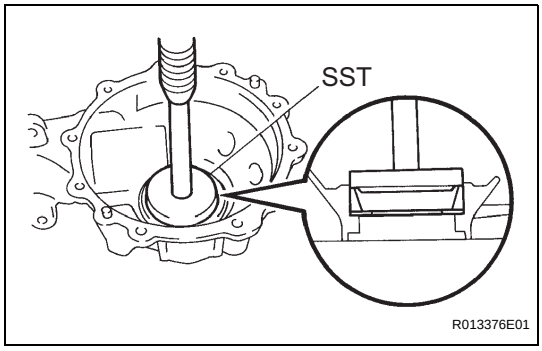

(b) Using SST and a press, press the case bearing (outer) into the differential carrier.

SST 09950-60020 (09951-00810), 09950-70010 (09951-07150)

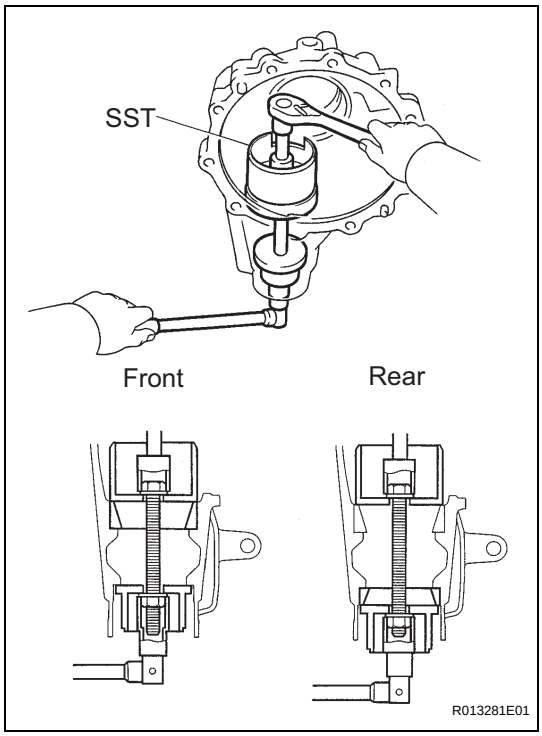

10. INSTALL BEARING OUTER RACE

(a) Using SST, install the outer race front.

SST 09950-00020 (09951-00890, 09951-00680)

(b) Using a brass bar and hammer, tap in the oil storage ring.

(c) Using SST, install the outer race rear.

SST 09950-00020 (09951-00890, 09951-00680)

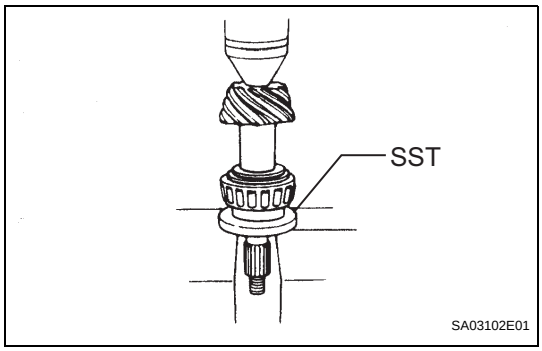

11. INSTALL FRONT DRIVE PINION FRONT TAPERED ROLLER BEARING

(a) Install the washer onto the drive pinion.

HINT:

First fit a washer that has the same thickness as the removed washer. After checking the tooth contact pattern, replace the washer with one of a different thickness if necessary.

(b) Using SST and a press, press the front bearing onto the drive pinion.
SST 09506-30012

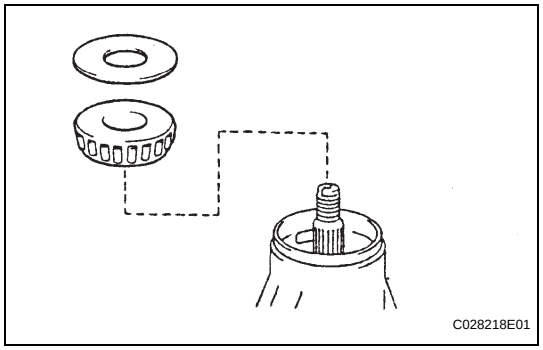

12. ADJUST DIFFERENTIAL DRIVE PINION PRELOAD

(a) Install the drive pinion and oil slinger.
HINT:
Assemble the spacer and oil seal after adjusting the gear contact pattern.

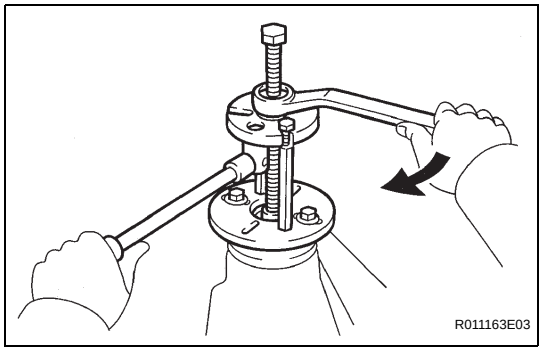

(b) Using SST, install the companion flange.
SST 09950-30012 (09951-03010, 09953-03010, 09954-03010, 09955-03030, 09956-03020)
NOTICE:
Before using SST (center bolt), apply hypoid gear oil to its threads and tip.

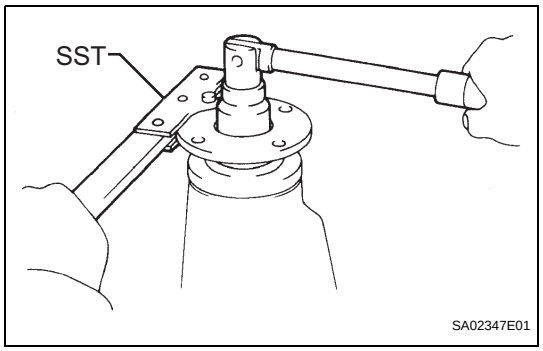

(c) Adjust the drive pinion preload by tightening the companion flange nut.

(d) Using SST to hold the flange in place, tighten the nut.
Torque: 370 N*m (3,770 kgf*cm, 273 ft.*lbf) or less
NOTICE:
- **As there is no spacer, tighten the nut a little at a time. Be careful not to overtighten it.**
- **Apply hypoid gear oil to the nut.**

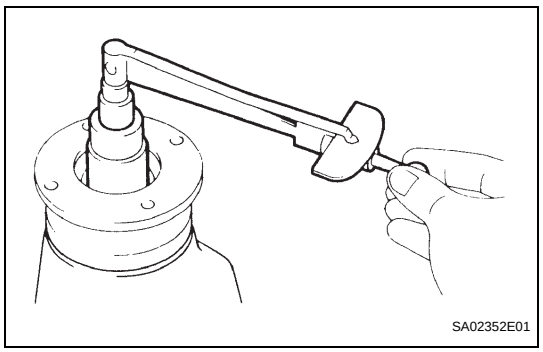

(e) Using a torque wrench, measure the preload.
Preload (at starting)

Item	Specified Condition
New bearing	0.98 to 1.57 N*m (5 to 8 kgf*cm, 4.3 to 6.9 in.*lbf)
Used bearing	0.49 to 0.78 N*m (5 to 8 kgf*cm, 4.3 to 6.9 in.*lbf)

NOTICE:
For a more accurate measurement, rotate the bearing forward and backward several times before measuring.

13. INSTALL DIFFERENTIAL CASE ASSEMBLY

14. ADJUST DIFFERENTIAL RING GEAR BACKLASH

(a) Install the side bearing retainer with the 10 bolts.
Torque: 50 N*m (510 kgf*cm, 37 ft.*lbf)

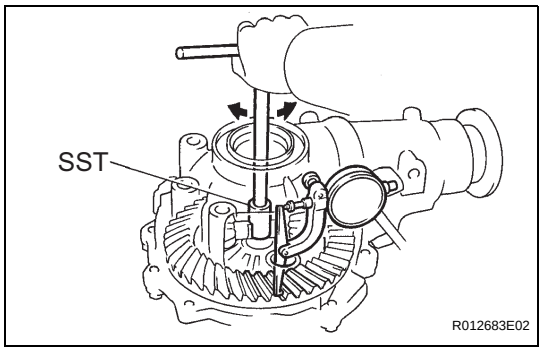

(b) Using SST and a dial indicator, measure the ring gear backlash.
SST 09564-32011
Backlash:
0.11 to 0.21 mm (0.0043 to 0.0083 in.)
If the backlash is not as specified, adjust it by either increasing or decreasing the number of washers on both sides equally.
HINT:
There should be no clearance between the plate washer and case. Make sure that the ring gear has backlash.

Washer thickness

Thickness mm (in.)	Thickness mm (in.)	Thickness mm (in.)
1.57 to 1.59 (0.0618 to 0.0626)	1.75 to 1.77 (0.0689 to 0.0697)	2.03 to 2.05 (0.0791 to 0.0807)
1.59 to 1.61 (0.0626 to 0.0634)	1.77 to 1.79 (0.0697 to 0.0705)	2.05 to 2.07 (0.0807 to 0.0815)
1.61 to 1.63 (0.0634 to 0.0642)	1.79 to 1.81 (0.0705 to 0.0713)	2.07 to 2.09 (0.0815 to 0.0822)
1.63 to 1.65 (0.0642 to 0.0650)	1.81 to 1.83 (0.0713 to 0.0720)	2.09 to 2.11 (0.0822 to 0.0830)
1.65 to 1.67 (0.0650 to 0.0657)	1.83 to 1.85 (0.0720 to 0.0728)	2.11 to 2.13 (0.0830 to 0.0839)
1.67 to 1.69 (0.0657 to 0.0665)	1.85 to 1.87 (0.0728 to 0.0736)	2.13 to 2.15 (0.0839 to 0.0846)
1.69 to 1.71 (0.0665 to 0.0673)	1.87 to 1.89 (0.0736 to 0.0744)	2.15 to 2.17 (0.0846 to 0.0854)
1.71 to 1.73 (0.0673 to 0.0681)	1.89 to 2.01 (0.0744 to 0.0791)	-
1.73 to 1.75 (0.0681 to 0.0689)	2.01 to 2.03 (0.0791 to 0.0799)	-

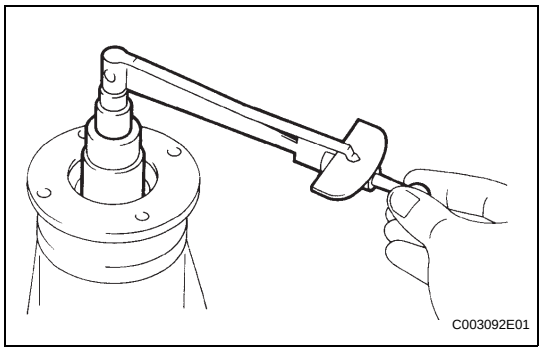

15. INSPECT TOTAL PRELOAD

(a) Using a torque wrench, measure the preload with the teeth of the drive pinion and ring gear in contact.
HINT:
Bolts without torque specifications are shown in the service data (see page SS-43).
If necessary, disassemble and inspect the differential.

16. ADJUST TOOTH CONTACT BETWEEN RING GEAR AND DRIVE PINION

(a) Remove the differential case bearing retainer and differential case.

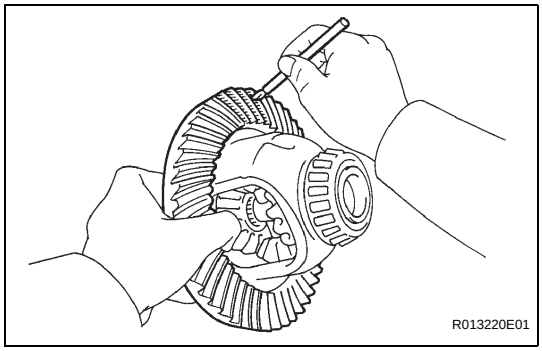

(b) Coat 3 or 4 teeth at 3 different positions on the ring gear with prussian blue.
(c) Install the differential case and differential case bearing retainer.
Torque: 50 N*m (510 kgf*cm, 37 ft.*lbf)
(d) Hold the companion flange firmly in place and rotate the ring gear in both directions.
(e) Remove the differential case bearing retainer and differential case.

(f) Inspect the tooth contact pattern.

Proper Contact

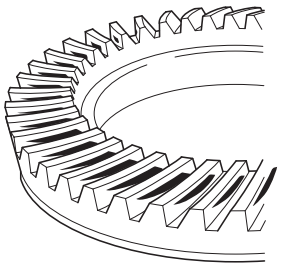

Drive Side

Toe Contact

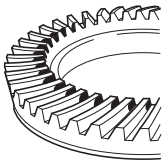

Face Contact

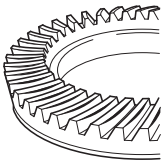

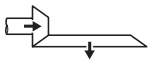

Select an adjusting washer that will shift the drive pinion closer to the ring gear.

Heel Contact

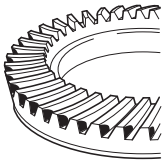

Flank Contact

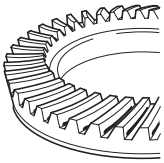



Select an adjusting washer that will shift the drive pinion away from the ring gear.

Coast Side

Heel Contact

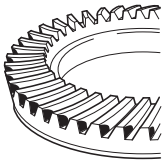

Flank Contact

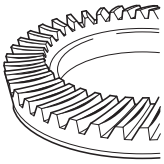

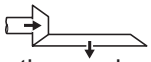

Select an adjusting washer that will shift the drive pinion closer to the ring gear.

Toe Contact

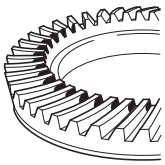

Face Contact

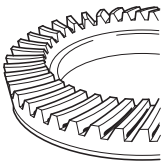

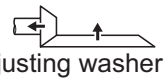

Select an adjusting washer that will shift the drive pinion away from the ring gear.

DF

P

C113178E02

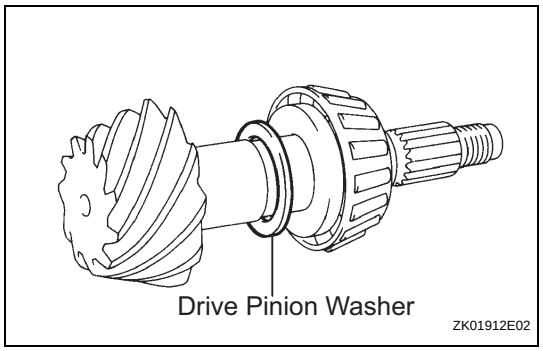

(g) If the teeth are not contacting properly, use the following chart to select an appropriate washer.

Washer thickness

Thickness mm (in.)	Thickness mm (in.)	Thickness mm (in.)
1.69 to 1.71 (0.0665 to 0.0673)	1.93 to 1.95 (0.0760 to 0.0768)	2.17 to 2.19 (0.0854 to 0.0862)
1.72 to 1.74 (0.0677 to 0.0685)	1.96 to 1.98 (0.0772 to 0.0780)	2.20 to 2.22 (0.0866 to 0.0874)
1.75 to 1.77 (0.0689 to 0.0697)	1.99 to 2.01 (0.0783 to 0.0791)	2.23 to 2.25 (0.0878 to 0.0886)
1.78 to 1.80 (0.0700 to 0.0709)	2.02 to 2.04 (0.0795 to 0.0803)	2.26 to 2.28 (0.0890 to 0.0898)
1.81 to 1.83 (0.0713 to 0.0720)	2.05 to 2.07 (0.0807 to 0.0815)	2.29 to 2.31 (0.0902 to 0.0909)
1.84 to 1.86 (0.0724 to 0.0732)	2.08 to 2.10 (0.0819 to 0.0827)	2.32 to 2.34 (0.0913 to 0.0921)
1.87 to 1.89 (0.0736 to 0.0744)	2.11 to 2.13 (0.0831 to 0.0839)	-
1.90 to 1.92 (0.0748 to 0.0756)	2.14 to 2.16 (0.0843 to 0.0850)	-

17. **REMOVE FRONT DRIVE PINION COMPANION FLANGE NUT (See page DF-23)**

18. **REMOVE FRONT DRIVE PINION COMPANION FLANGE SUB-ASSEMBLY (See page DF-24)**

19. **REMOVE FRONT DIFFERENTIAL DRIVE PINION OIL SLINGER**

20. **REMOVE FRONT DRIVE PINION REAR TAPERED ROLLER BEARING (See page DF-24)**

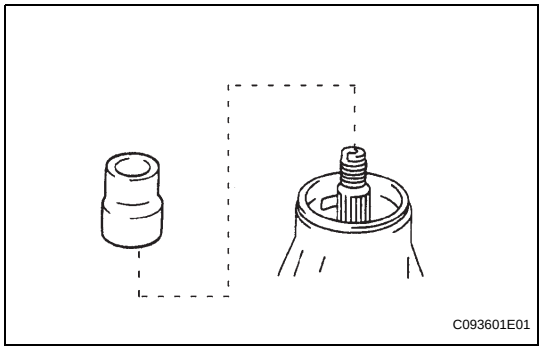

21. **INSTALL FRONT DIFFERENTIAL DRIVE PINION BEARING SPACER**
    (a) Install a new bearing spacer onto the drive pinion.

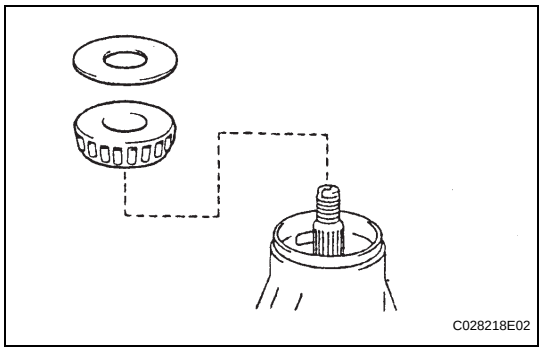

22. **INSTALL FRONT DRIVE PINION REAR TAPERED ROLLER BEARING**

23. **INSTALL FRONT DIFFERENTIAL DRIVE PINION OIL SLINGER**

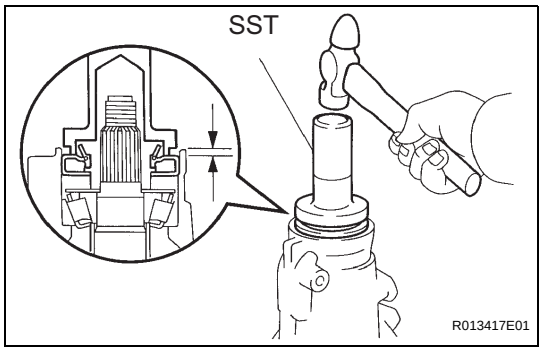

24. INSTALL FRONT DIFFERENTIAL CARRIER OIL SEAL

(a) Apply MP grease to the lip of a new oil seal.

(b) Using SST and a hammer, tap in the oil seal.

SST 09554-22010

Oil seal depth:

3.9 to 48 mm (0.1536 to 0.189 in.)

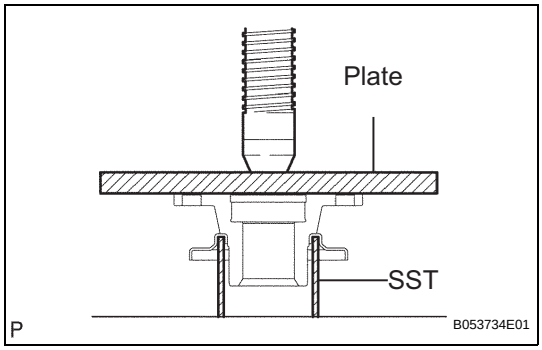

25. INSTALL FRONT DIFFERENTIAL DUST DEFLECTOR

(a) Using a steel plate and a press, press in a new dust deflector.

NOTICE:

Do not damage the dust deflector.

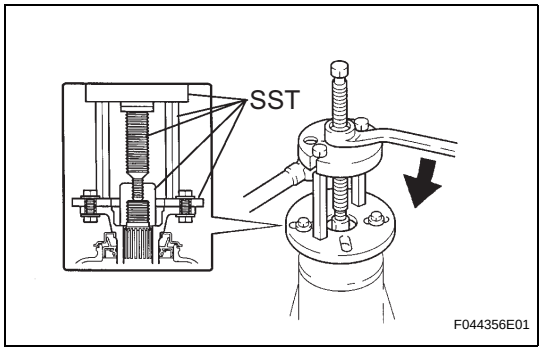

26. INSTALL FRONT DRIVE PINION COMPANION FLANGE SUB-ASSEMBLY

(a) Place the companion flange on the drive pinion.

(b) Coat the threads of a new nut with hypoid gear oil.

(c) Using SST, install the companion flange.

SST 09950-30012 (09951-03010, 09953-03010, 09954-03010, 09955-03030, 09956-03020)

NOTICE:

Before using SST (center bolt), apply hypoid gear oil to its threads and tip.

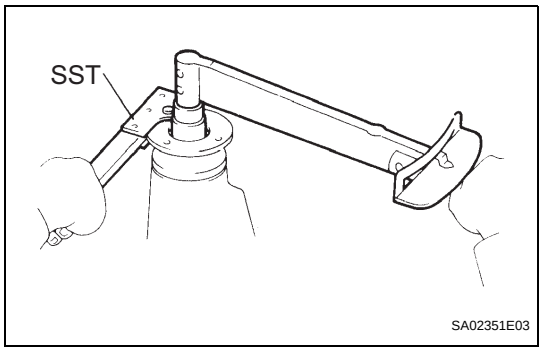

(d) Using SST to hold the companion flange in place, tighten the nut to the correct torque.

SST 09330-00021 (09330-00030)

Torque: 370 N*m (3,770 kgf*cm, 273 ft.*lbf) or less

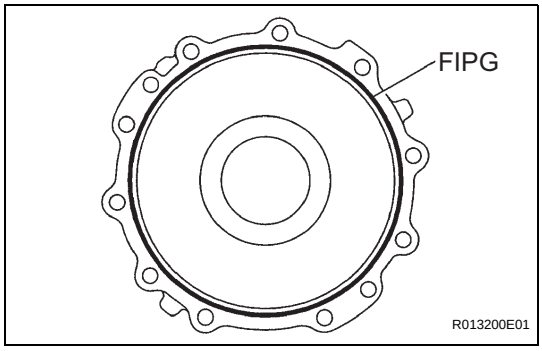

27. INSTALL DIFFERENTIAL SIDE BEARING RETAINER

(a) Remove any old FIPG material from the side bearing retainer.

NOTICE:

Do not drop oil on the contact surfaces of the differential carrier and side bearing retainer.

(b) Clean residual FIPG material from the contact surface using gasoline or alcohol.

DF

(c) Apply FIPG to the side bearing retainer, as shown.
FIPG:
Part No. 08826-00090, THREE BOND 1281 or the equivalent
HINT:
Install the side bearing retainer within 10 minutes of applying FIPG.
(d) Install the side bearing retainer with the 10 bolts.
Torque: 50 N*m (510 kgf*cm, 37 ft.*lbf)

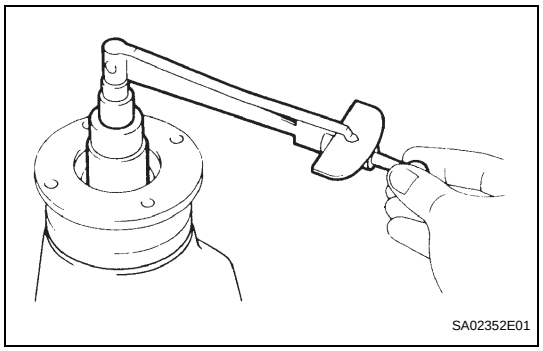
SA02352E01

28. INSPECT DRIVE PINION PRELOAD

(a) Using a torque wrench, measure the preload of the backlash between the drive pinion and ring gear.
Preload (at starting)

Item	Specified Condition
New bearing	0.98 to 1.57 N*m (10 to 16 kgf*cm, 8.7 to 14 in.*lbf)
Used bearing	0.49 to 0.78 N*m (5 to 8 kgf*cm, 4.3 to 6.9 in.*lbf)

If the preload is greater than the maximum, replace the bearing spacer.
If the preload is less than the minimum, retighten the nut with 13 N*m (130 kgf*cm, 9 ft.*lbf) of torque at a time until the specified preload is reached.
Torque: 370 N*m (3,770 kgf*cm, 273 ft.*lbf) or less
If the maximum torque is exceeded while retightening the nut, replace the bearing spacer and repeat the preload adjusting procedure.
HINT:
Do not loosen the pinion nut to reduce the preload.

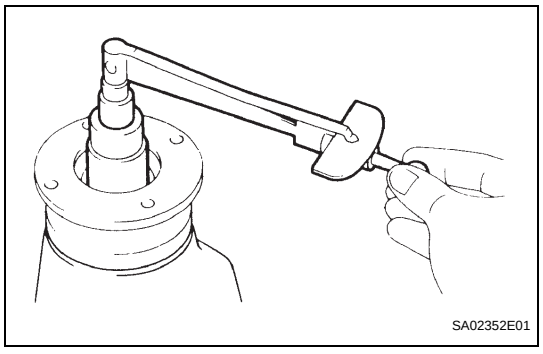
SA02352E01

29. INSPECT TOTAL PRELOAD

(a) Using a torque wrench, measure the preload with the teeth of the drive pinion and ring gear in contact.
Torque: Total preload (at starting)
0.22 to 0.88 N*m (6 to 9 kgf*cm, 1.9 to 8.8 in.*lbf) drive pinion preload plus
HINT:
Bolts without torque specifications are shown in the service data (see page SS-43).
If necessary, disassemble and inspect the differential.

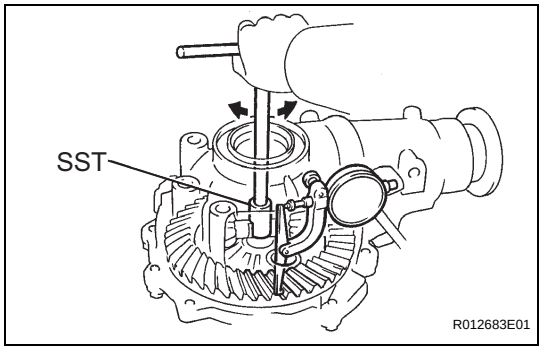

R012683E01

30. INSPECT DIFFERENTIAL RING GEAR BACKLASH

(a) Using SST and a dial indicator, measure the ring gear backlash.
SST 09564-32011
Backlash:
0.11 to 0.21 mm (0.0043 to 0.0083 in.)
If the backlash is not within the specification, adjust the side bearing preload.

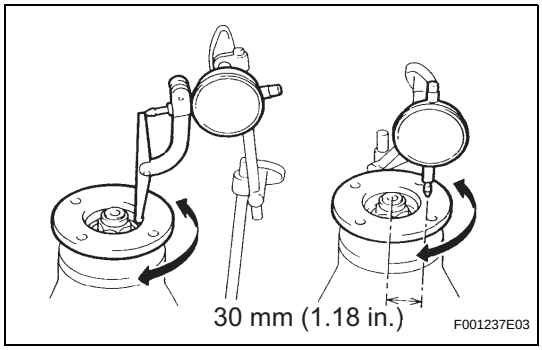

31. INSPECT FRONT DRIVE PINION COMPANION FLANGE SUB-ASSEMBLY

(a) Using a dial indicator, measure the runout of the companion flange vertically and laterally.
Maximum runout

Runout	Maximum
Vertical runout	0.10 mm (0.0039 in.)
Lateral runout	0.10 mm (0.0039 in.)

If the runout is greater than the maximum, replace the companion flange.

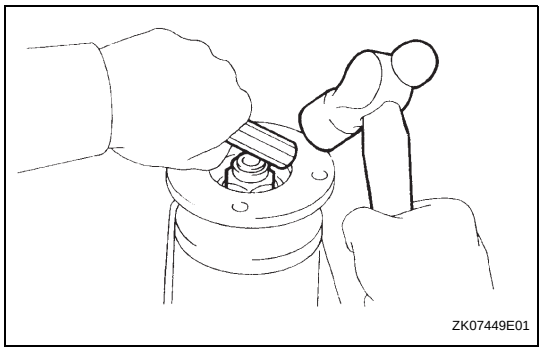

32. STAKE DRIVE PINION COMPANION FLANGE NUT

(a) Using a chisel and hammer, stake the drive pinion nut.

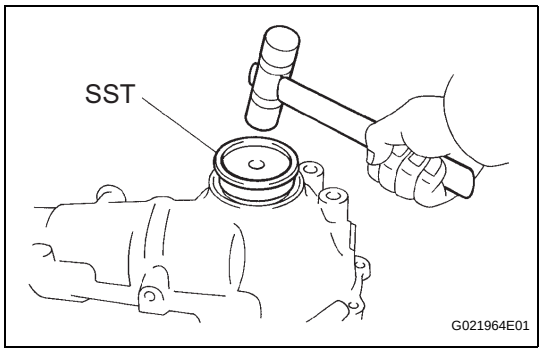

33. INSTALL DIFFERENTIAL SIDE GEAR SHAFT OIL SEAL

(a) Coat the lip of a new oil seal with MP grease.
(b) Using SST and a plastic-faced hammer, tap in the oil seal until its surface is flush with the differential carrier end.
SST 09608-32010
Oil seal depth:
-0.45 to 0.45 mm (-0.018 to 0.018 in.)

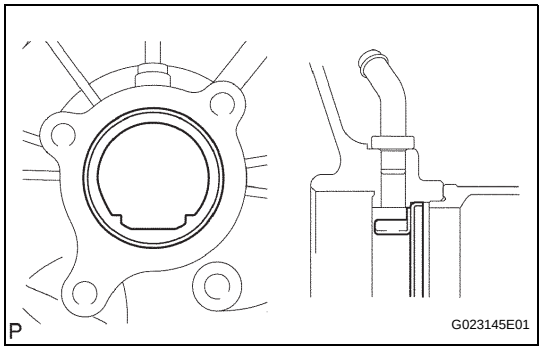

34. INSTALL FRONT DIFFERENTIAL SIDE BEARING RETAINER DEFLECTOR

(a) Using a brass bar and hammer, tap in the side bearing retainer deflector.
NOTICE:
Install the side bearing retainer deflector in the correct direction.

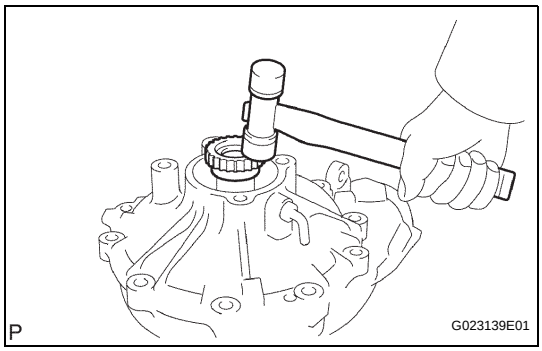

35. INSTALL DIFFERENTIAL SIDE GEAR INTER SHAFT SUB-ASSEMBLY

(a) Install a new snap ring onto the side gear inter shaft.
(b) Using a plastic-faced hammer, tap the side gear inter shaft into the differential case.
(c) Check that there is 2 to 3 mm (0.08 to 0.12 in.) of axial play.
(d) Check that the side gear inter shaft cannot be completely pulled out by hand.

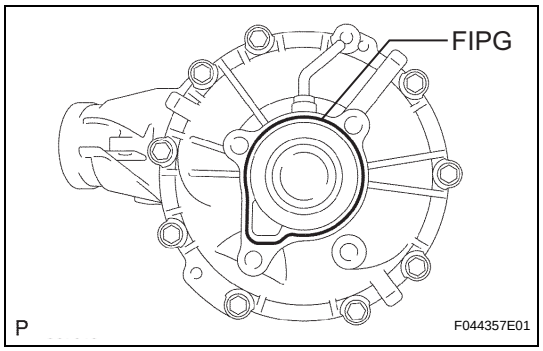

36. INSTALL FRONT DIFFERENTIAL TUBE ASSEMBLY

(a) Remove any old FIPG material from the contact surfaces of the differential and clutch case.
NOTICE:
Do not drop oil on the contact surfaces of the differential and clutch case.

(b) Clean residual FIPG material from the contact surface using gasoline or alcohol.

(c) Apply FIPG to the differential as shown.
FIPG:
Part No. 08826-00090, THREE BOND 1281 or the equivalent
HINT:
Install the differential tube within 10 minutes of applying FIPG.

(d) Install the differential tube onto the differential.

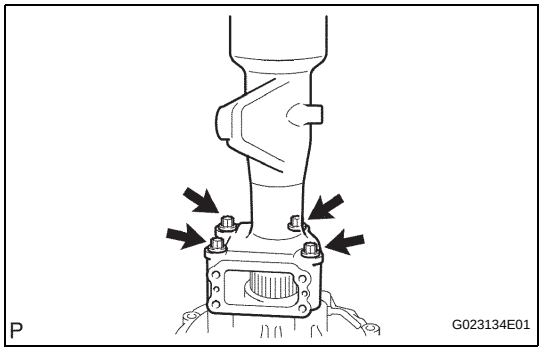

(e) Clean the threads of the 4 bolts and retainer bolt holes with toluene or trichloroethylene.

(f) Apply adhesive to 2 or 3 threads of each bolt end.
Adhesive:
Part No. 08833-00070, THREE BOND 1281 or the equivalent

(g) Install the 4 bolts.
Torque: 110 N*m (1,120 kgf*cm, 81 ft.*lbf)

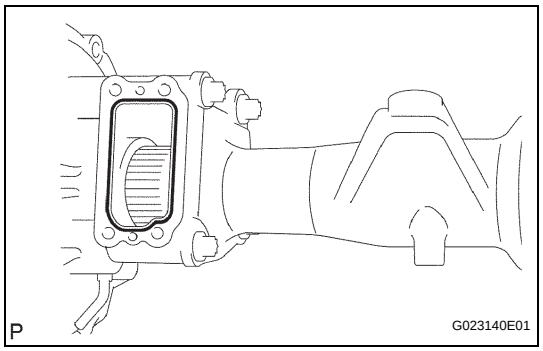

37. INSTALL DIFFERENTIAL VACUUM ACTUATOR ASSEMBLY

(a) Remove any FIPG material from the contact surface of the differential and clutch case. Also, do not drop oil on the contact surfaces.

(b) Clean residual FIPG material from the contact surfaces using gasoline or alcohol.

(c) Apply FIPG to the differential tube as shown.
FIPG:
Part No. 08826-00090, THREE BOND 1281 or the equivalent
HINT:
Install the actuator within 10 minutes of applying FIPG.

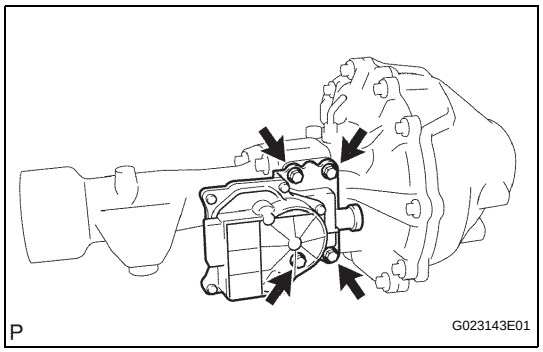

(d) Clean the threads of the 4 bolts and retainer bolt holes with toluene or trichloroethylene.

(e) Install the actuator onto the differential tube.

(f) Apply adhesive to 2 or 3 threads of each bolt end.
Adhesive:
Part No. 08833-00070, THREE BOND 1281 or the equivalent

(g) Install the 4 bolts.
Torque: 21 N*m (210 kgf*cm, 15 ft.*lbf)

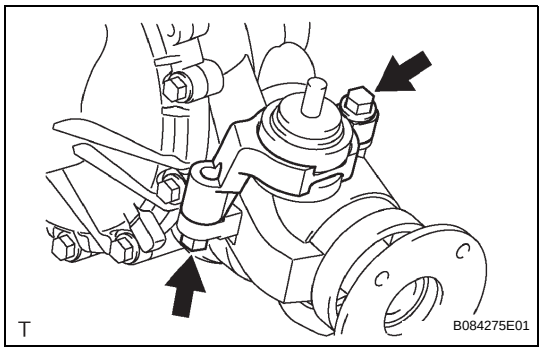

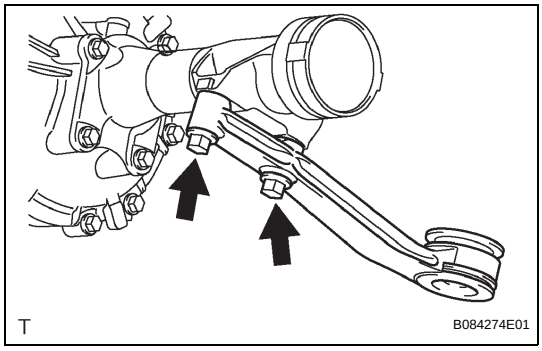

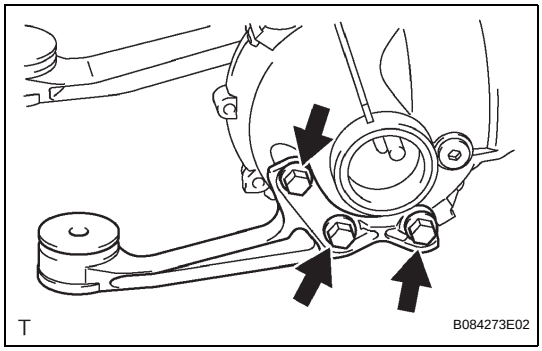

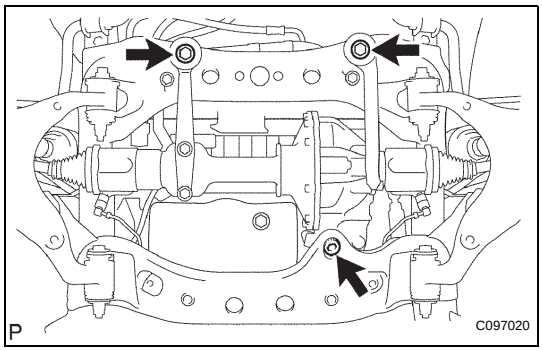

INSTALLATION

1. **INSTALL FRONT DIFFERENTIAL CARRIER ASSEMBLY**
   (a) Install the front No. 3 differential support with the 2 bolts.
   Torque: 108 N*m (1,100 kgf*cm, 80 ft.*lbf)

   (b) Install the front No. 2 differential support with the 2 bolts.
   Torque: 160 N*m (1,630 kgf*cm, 11 ft.*lbf)

   (c) Install the front No. 1 differential support with the 3 bolts.
   Torque: 186 N*m (1,900 kgf*cm, 137 ft.*lbf)
   (d) Support the front differential with a jack.

   (e) Install the 2 front mounting bolts and 2 nuts.
   Torque: 137 N*m (1,400 kgf*cm, 101 ft.*lbf)
   (f) Install front differential mounting nut No. 1.
   Torque: 87 N*m (887 kgf*cm, 64 ft.*lbf)
   (g) Install the front differential breather tube bracket with the bolt.
   Torque: 13 N*m (133 kgf*cm, 10 ft.*lbf)
   (h) Lower the jack.
2. **INSTALL FRONT DRIVE SHAFT ASSEMBLY LH (See page DS-9)**
3. **INSTALL FRONT DRIVE SHAFT ASSEMBLY RH**
   HINT:
   Use the same procedure as for the LH side.
4. **INSTALL FRONT LOWER BALL JOINT ATTACHMENT (See page DS-10)**
5. **INSTALL TIE ROD END SUB-ASSEMBLY LH (See page DS-10)**

6. **INSTALL TIE ROD END SUB-ASSEMBLY RH**
   HINT:
   Use the same procedure as for the LH side.
7. **INSTALL FRONT AXLE HUB NUT LH (See page DS-10)**
8. **INSTALL FRONT AXLE HUB NUT RH**
   HINT:
   Use the same procedure as for the LH side.
9. **INSTALL FRONT AXLE HUB GREASE CAP**
10. **INSTALL FRONT SPEED SENSOR LH (See page DS-10)**
11. **INSTALL FRONT SPEED SENSOR RH**
    HINT:
    Use the same procedure as for the LH side.
12. **INSTALL FRONT WHEEL**
    Torque: 112 N*m (1,137 kgf*cm, 82 ft.*lbf)
13. **INSPECT DIFFERENTIAL OIL (See page DF-3)**
14. **CHECK FOR DIFFERENTIAL OIL LEAKAGE**
15. **INSTALL REAR ENGINE UNDER COVER ASSEMBLY**
16. **INSTALL NO. 1 ENGINE UNDER COVER**
17. **CONNECT CABLE TO NEGATIVE BATTERY TERMINAL**
    Torque: 3.9 N*m (40 kgf*cm, 35 in.*lbf)
18. **CHECK VSC SENSOR SIGNAL**
    (See page BC-28)
19. **INSPECT AND ADJUST FRONT WHEEL ALIGNMENT**
    (See page SP-2)

REAR DIFFERENTIAL CARRIER ASSEMBLY

COMPONENTS

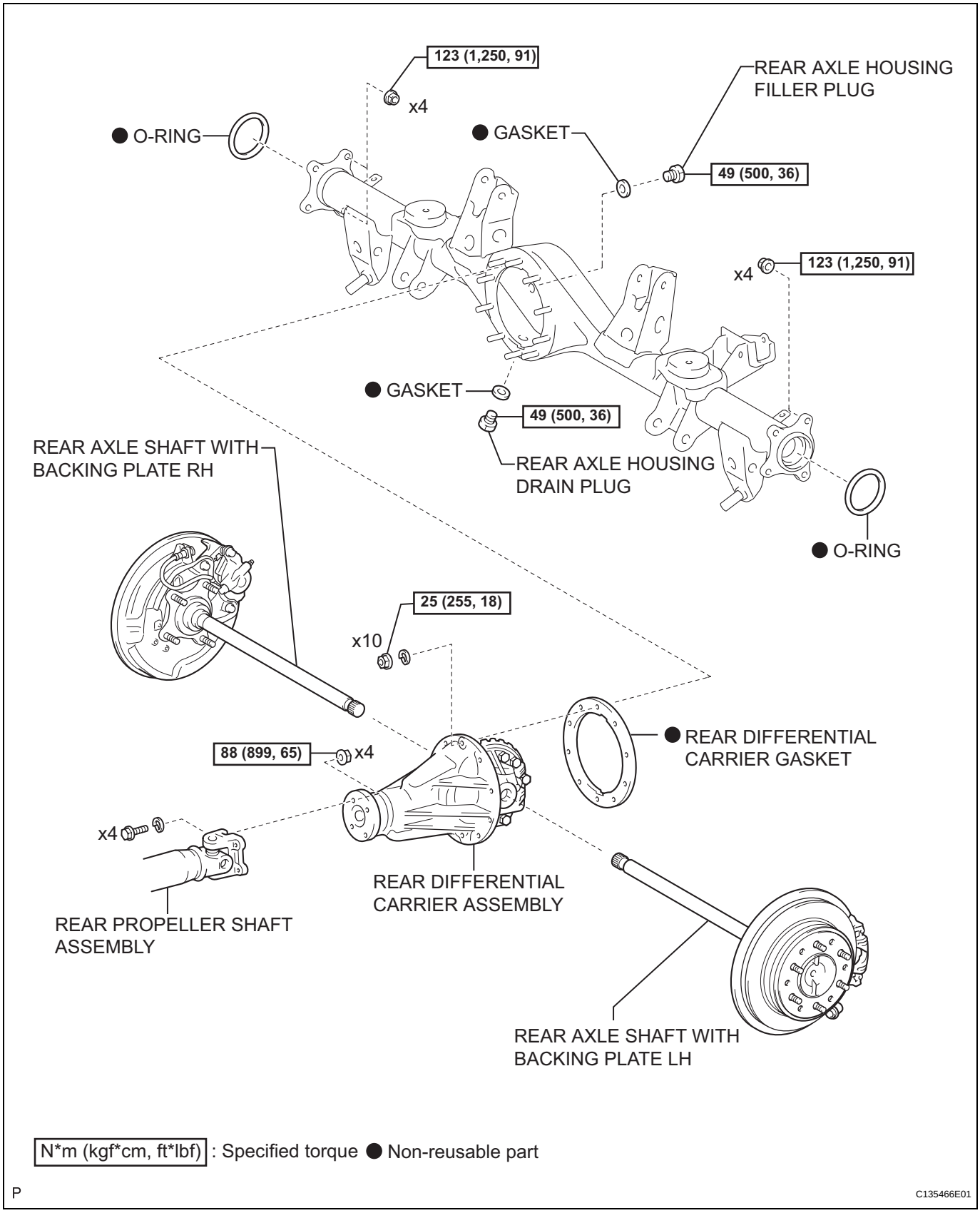

N*m (kgf*cm, ft*lbf) : Specified torque ● Non-reusable part

P

C135466E01

DF

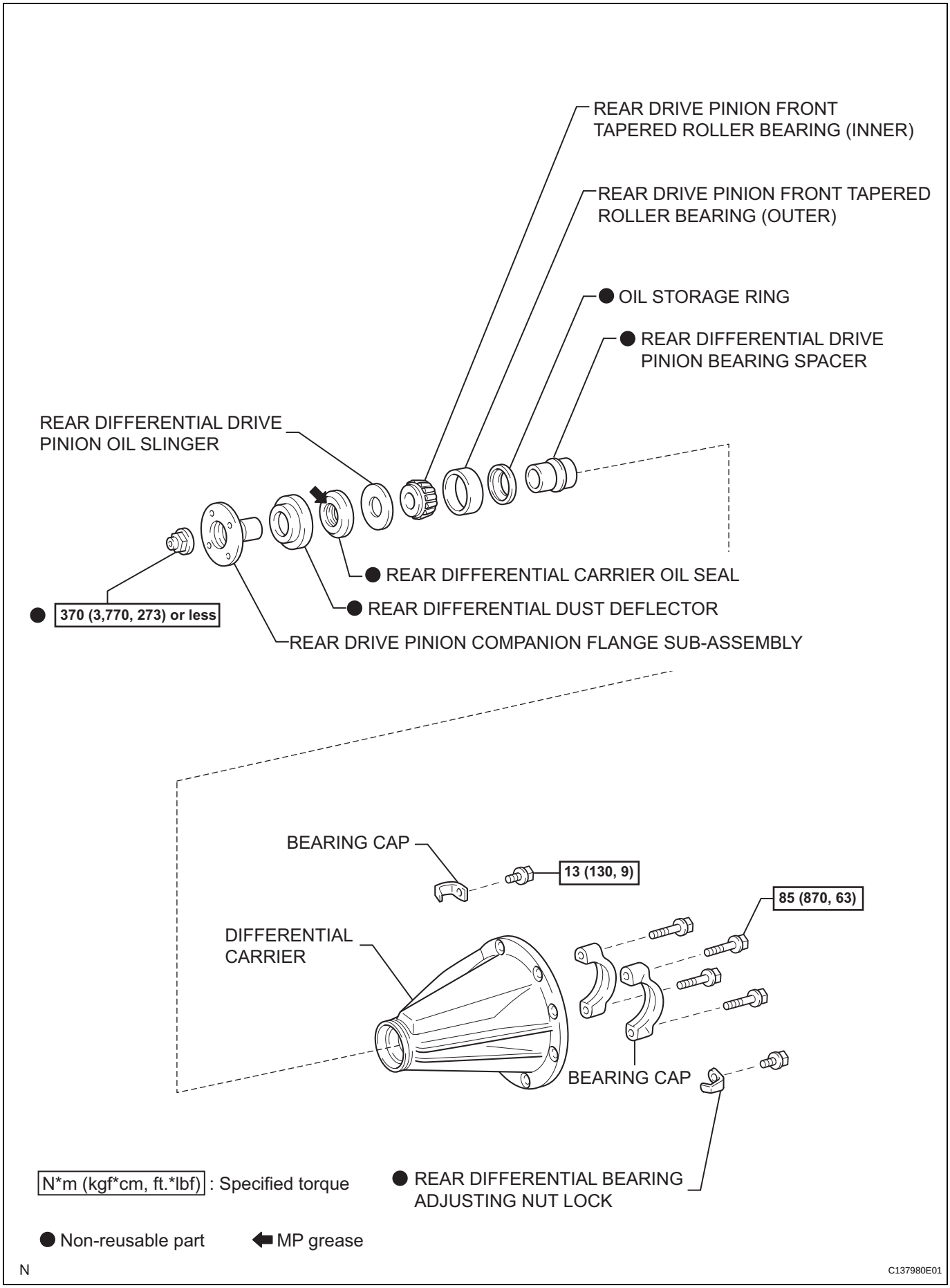
REAR DRIVE PINION FRONT TAPERED ROLLER BEARING (INNER)
REAR DRIVE PINION FRONT TAPERED ROLLER BEARING (OUTER)
● OIL STORAGE RING
● REAR DIFFERENTIAL DRIVE PINION BEARING SPACER
REAR DIFFERENTIAL DRIVE PINION OIL SLINGER
● REAR DIFFERENTIAL CARRIER OIL SEAL
● REAR DIFFERENTIAL DUST DEFLECTOR
● 370 (3,770, 273) or less
REAR DRIVE PINION COMPANION FLANGE SUB-ASSEMBLY
BEARING CAP
13 (130, 9)
85 (870, 63)
DIFFERENTIAL CARRIER
BEARING CAP
N*m (kgf*cm, ft.*lbf) : Specified torque
● REAR DIFFERENTIAL BEARING ADJUSTING NUT LOCK
● Non-reusable part
⬅ MP grease
N
C137980E01

DF

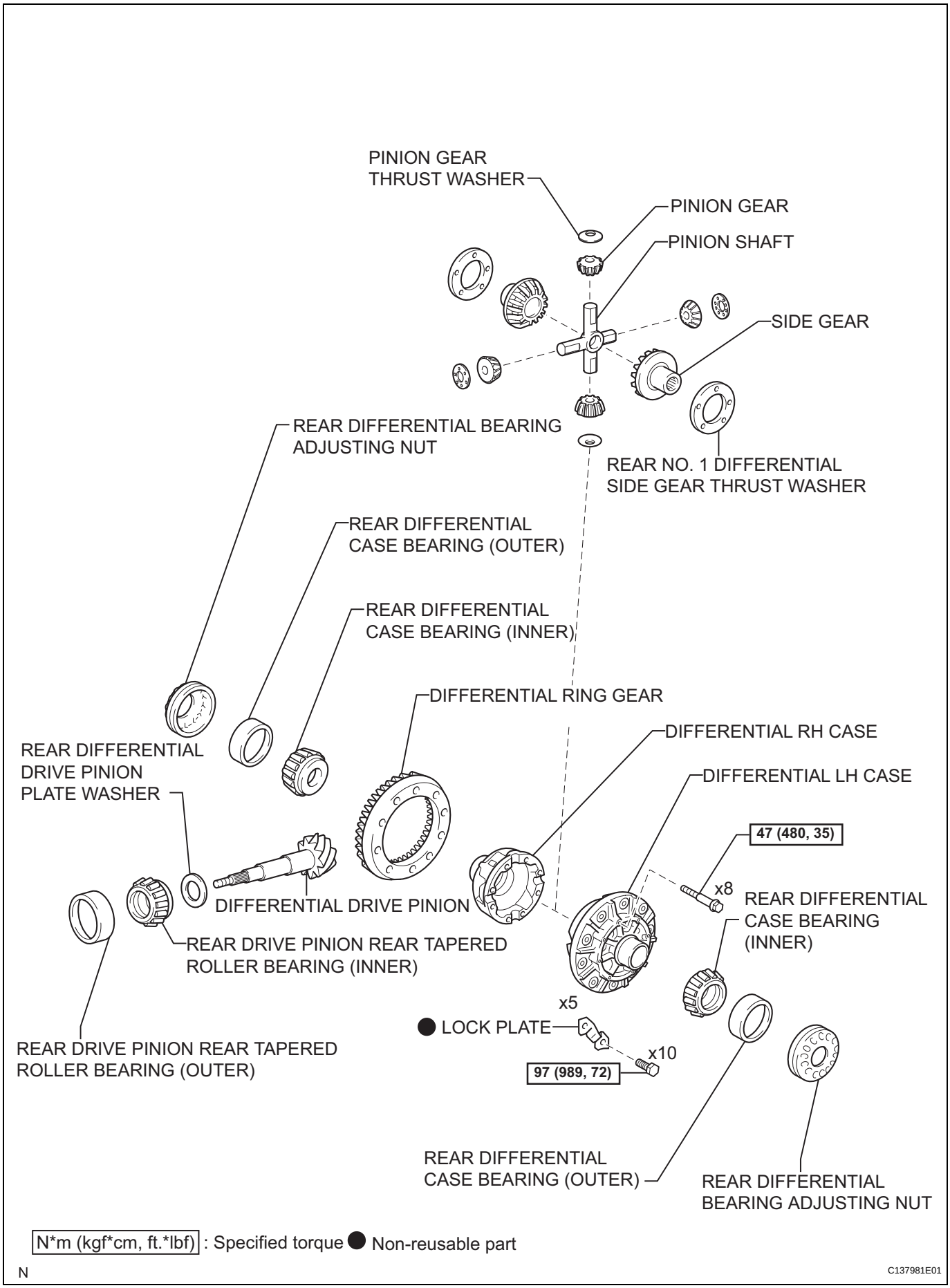
PINION GEAR THRUST WASHER
PINION GEAR
PINION SHAFT
SIDE GEAR
REAR DIFFERENTIAL BEARING ADJUSTING NUT
REAR NO. 1 DIFFERENTIAL SIDE GEAR THRUST WASHER
REAR DIFFERENTIAL CASE BEARING (OUTER)
REAR DIFFERENTIAL CASE BEARING (INNER)
DIFFERENTIAL RING GEAR
REAR DIFFERENTIAL DRIVE PINION PLATE WASHER
DIFFERENTIAL RH CASE
DIFFERENTIAL LH CASE
47 (480, 35)
x8
REAR DIFFERENTIAL CASE BEARING (INNER)
DIFFERENTIAL DRIVE PINION
REAR DRIVE PINION REAR TAPERED ROLLER BEARING (INNER)
x5
● LOCK PLATE
x10
97 (989, 72)
REAR DRIVE PINION REAR TAPERED ROLLER BEARING (OUTER)
REAR DIFFERENTIAL CASE BEARING (OUTER)
REAR DIFFERENTIAL BEARING ADJUSTING NUT
N*m (kgf*cm, ft.*lbf) : Specified torque ● Non-reusable part
N
C137981E01

DF

REMOVAL

1. **DISCONNECT CABLE FROM NEGATIVE BATTERY TERMINAL**
2. **REMOVE REAR WHEEL**
3. **DRAIN BRAKE FLUID**
   HINT:
   Immediately wash off any brake fluid that comes into contact with any painted surfaces.
4. **DRAIN DIFFERENTIAL OIL**
5. **REMOVE REAR DISC BRAKE CALIPER ASSEMBLY LH (See page AH-19)**
6. **REMOVE REAR DISC BRAKE CALIPER ASSEMBLY RH**
   HINT:
   Use the same procedure as for the LH side.
7. **REMOVE REAR DISC (See page PB-17)**
8. **REMOVE PARKING BRAKE SHOE RETURN TENSION SPRING (See page PB-17)**
9. **REMOVE PARKING BRAKE SHOE STRUT LH (See page PB-17)**
10. **REMOVE PARKING BRAKE SHOE (See page PB-17)**
11. **SEPARATE PARKING BRAKE CABLE LH (See page AH-19)**
12. **REMOVE PARKING BRAKE CABLE RH**
    HINT:
    Use the same procedure as for the LH side.
13. **REMOVE REAR SPEED SENSOR (See page BC-198)**
14. **REMOVE REAR SPEED SENSOR RH**
    HINT:
    Use the same procedure as for the LH side.
15. **REMOVE REAR AXLE SHAFT RH (See page AH-19)**
16. **REMOVE REAR AXLE SHAFT LH**
    HINT:
    Use the same procedure as for the LH side.
17. **REMOVE REAR AXLE SHAFT LH OIL SEAL (See page AH-20)**
18. **REMOVE REAR AXLE SHAFT RH OIL SEAL**
    HINT:
    Use the same procedure as for the LH side.
19. **REMOVE REAR PROPELLER SHAFT ASSEMBLY (for 2WD) (See page PR-9)**
20. **REMOVE PROPELLER SHAFT ASSEMBLY (for 4WD) (See page PR-9)**

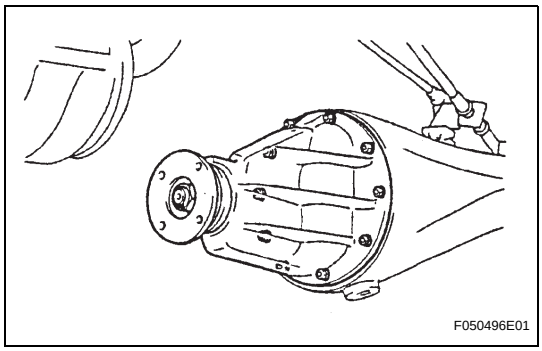

21. REMOVE REAR DIFFERENTIAL CARRIER ASSEMBLY

(a) Remove the 10 nuts and the differential carrier.

NOTICE:

Be careful not to damage the contact surface.

22. REMOVE REAR DIFFERENTIAL CARRIER GASKET

DISASSEMBLY

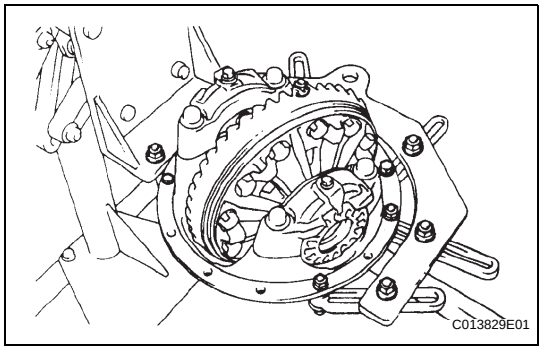

1. FIX REAR DIFFERENTIAL CARRIER ASSEMBLY

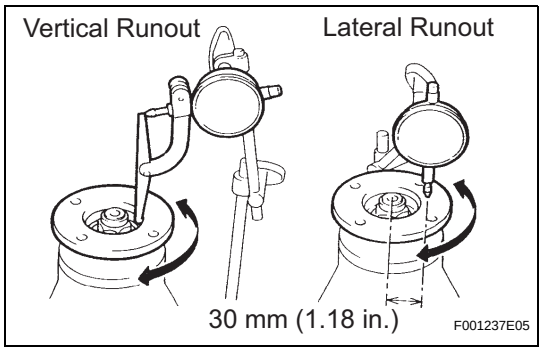

2. INSPECT RUNOUT OF REAR DRIVE PINION COMPANION FLANGE SUB-ASSEMBLY REAR

(a) Using a dial indicator, measure the runout of the companion flange vertically and laterally.

Maximum runout

Runout	Maximum
Vertical runout	0.10 mm (0.0039 in.)
Lateral runout	0.10 mm (0.0039 in.)

If the runout is greater than the maximum, replace the companion flange.

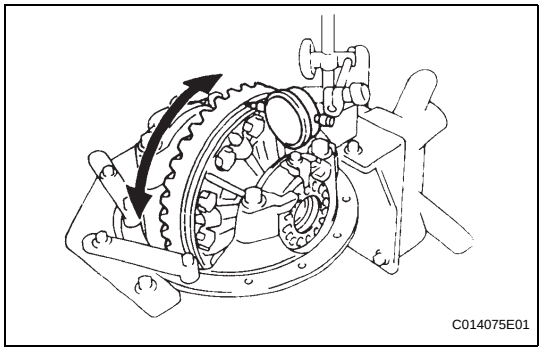

3. INSPECT RUNOUT OF DIFFERENTIAL RING GEAR

(a) Using a dial indicator, check the runout of the ring gear.

Maximum runout:

0.07 mm (0.0028 in.)

If the runout is greater than the maximum, replace the ring gear with a new one.

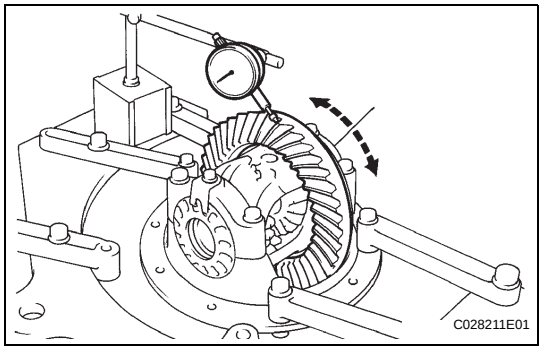

4. INSPECT DIFFERENTIAL RING GEAR BACKLASH

(a) Using a dial indicator, check the backlash of the ring gear.

Backlash:

0.13 to 0.18 mm (0.0051 to 0.0071 in.)

If the backlash is not within the specification, adjust the side bearing preload or repair as necessary.

HINT:

Perform the measurements at 3 or more positions around the side bearing preload.

DF

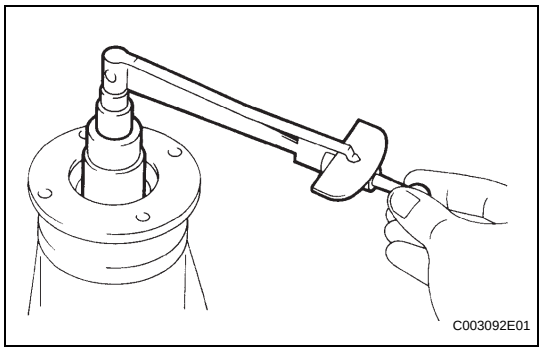

5. INSPECT DIFFERENTIAL DRIVE PINION PRELOAD

(a) Using a torque wrench, measure the preload of backlash between the drive pinion and ring gear.
Preload (at starting):
0.56 to 0.85 N*m (5.7 to 8.7 kgf*cm, 5.0 to 7.5 in.*lbf)
If necessary, disassemble and inspect the differential.

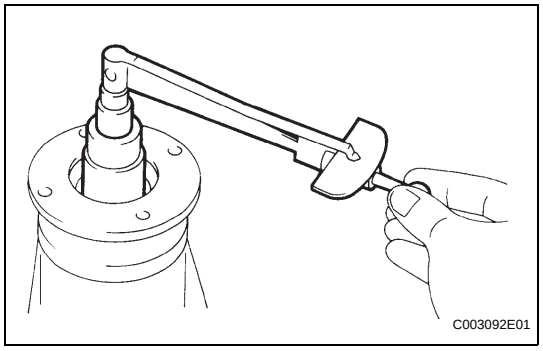

6. INSPECT TOTAL PRELOAD

(a) Using a torque wrench, measure the preload with the teeth of the drive pinion and ring gear in contact.
(b) Using a torque wrench, measure the total preload.
Total preload (at starting):
Drive pinion preload plus 0.39 to 0.59 N*m (4.0 to 6.0 kgf*cm, 3.5 to 5.2 in.*lbf)
If necessary, disassemble and inspect the differential.

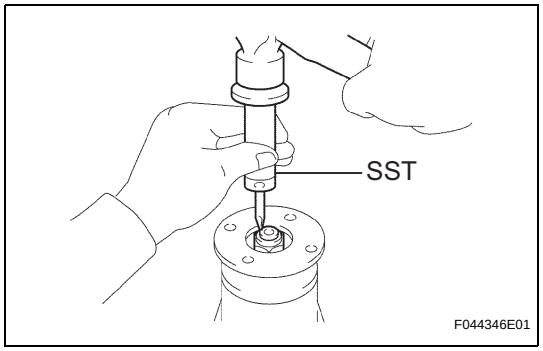

7. REMOVE REAR DRIVE PINION NUT

(a) Using SST and a hammer, loosen the staked part of the nut.
SST 09930-00010

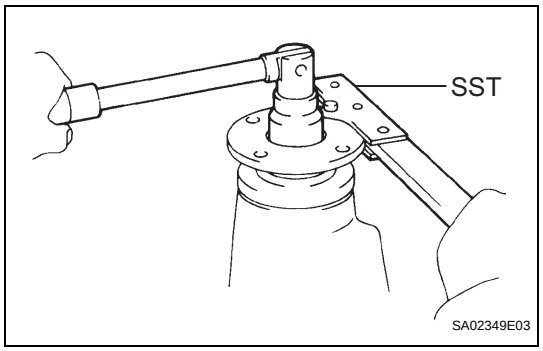

(b) Using SST to hold the companion flange in place, remove the nut.
SST 09330-00021

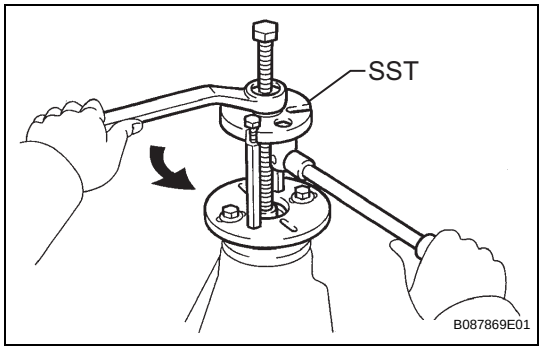

8. REMOVE REAR DRIVE PINION COMPANION FLANGE SUB-ASSEMBLY

(a) Using SST, remove the companion flange.
SST 09950-30012 (09951-03010, 09953-03010, 09954-03010, 09955-03030, 09956-03030)
NOTICE:
Before using SST (center bolt), apply hypoid gear oil to its threads and tip.

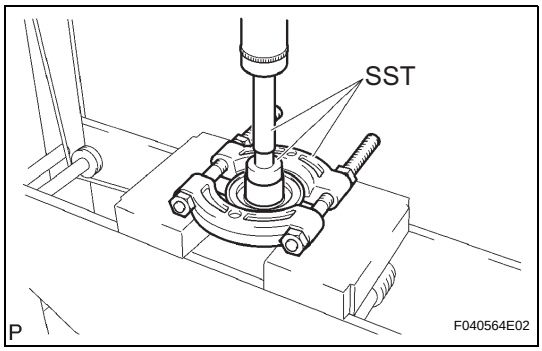

9. REMOVE REAR DIFFERENTIAL DUST DEFLECTOR

(a) Using SST and a press, press out the dust deflector.

SST 09950-60010 (09951-00380), 09950-70010 (09951-07150), 09950-00020

NOTICE:

Do not drop the companion flange.

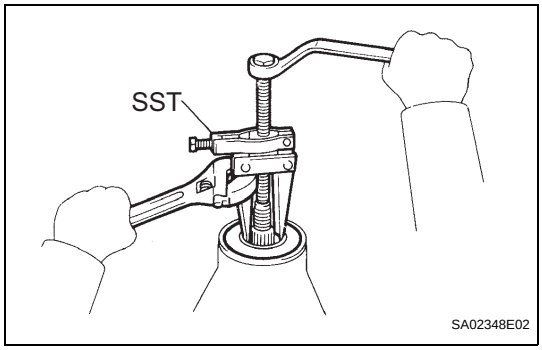

10. REMOVE REAR DIFFERENTIAL CARRIER OIL SEAL

(a) Using SST, remove the oil seal from the differential carrier.

SST 09308-10010

11. REMOVE REAR DIFFERENTIAL DRIVE PINION OIL SLINGER

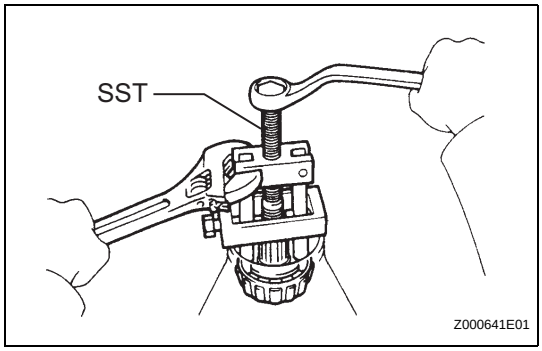

12. REMOVE REAR DRIVE PINION FRONT TAPERED ROLLER BEARING

(a) Using SST, remove the roller bearing (inner) from the drive pinion.

SST 09556-22010

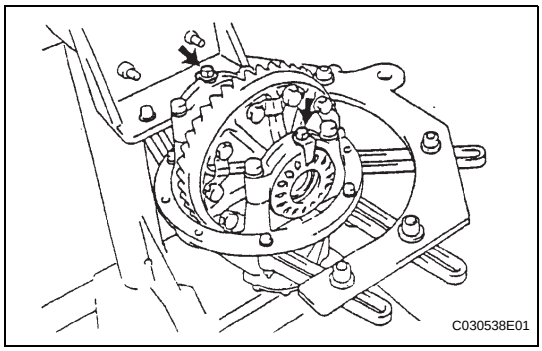

13. REMOVE REAR DIFFERENTIAL BEARING ADJUSTING NUT LOCK

(a) Remove the 2 bolts and 2 adjusting locks.

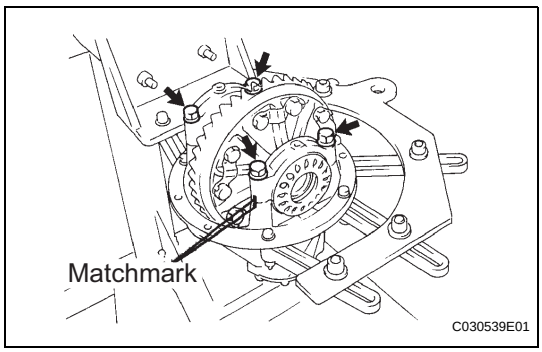

14. REMOVE DIFFERENTIAL CASE ASSEMBLY

(a) Place matchmarks on the bearing cap and differential carrier.

(b) Remove the 4 bolts and 2 differential bearing caps.

(c) Remove the 2 adjusting nuts.

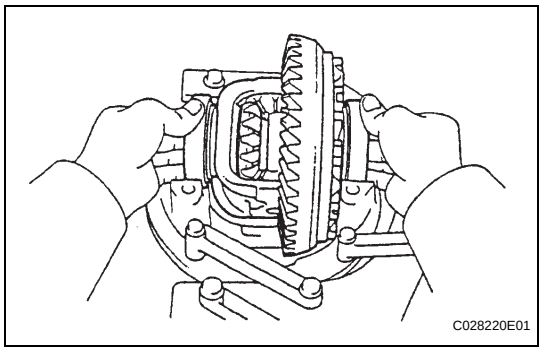

(d) Remove the rear differential case assembly from the differential carrier.
HINT:
Tag the 2 case bearing outer races to show the location for reassembly.

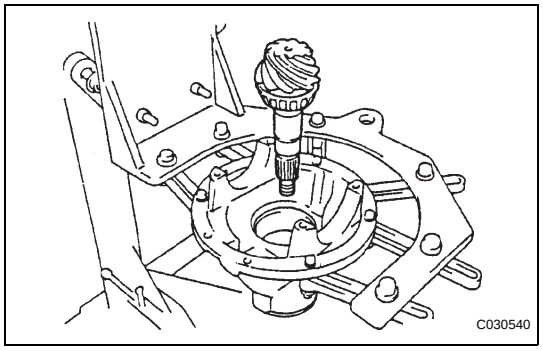

15. REMOVE DIFFERENTIAL DRIVE PINION

(a) Remove the drive pinion and bearing spacer from the differential carrier.

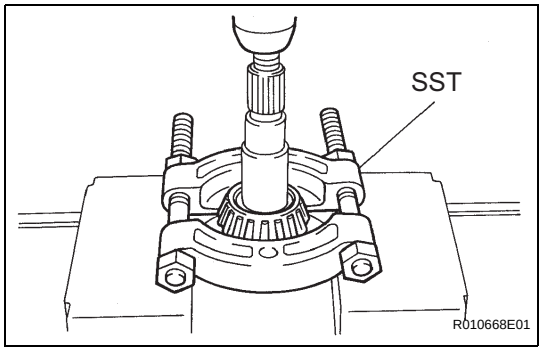

16. REMOVE REAR DRIVE PINION REAR TAPERED ROLLER BEARING

(a) Using SST and a press, press out the roller bearing (inner) from the drive pinion.
SST 09950-00020
NOTICE:
Do not drop the drive pinion.
HINT:
If the drive pinion or ring gear is damaged, replace them as a set.

17. REMOVE REAR DIFFERENTIAL DRIVE PINION PLATE WASHER

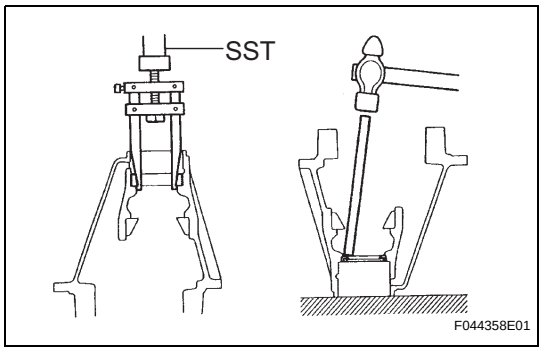

18. REMOVE REAR DRIVE PINION FRONT TAPERED ROLLER BEARING

(a) Using SST, remove the roller bearing (outer) from the carrier.
SST 09308-00010

(b) Using a brass bar and hammer, tap out the oil storage ring from the carrier.
HINT:
If the bearing is damaged during removal, replace it.

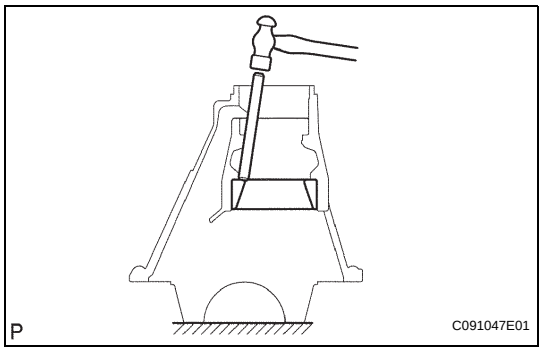

19. REMOVE REAR DRIVE PINION REAR TAPERED ROLLER BEARING

(a) Using a brass bar and hammer, tap out the rear tapered roller bearing (outer) from the carrier.
HINT:
If the bearing is damaged during removal, replace it.

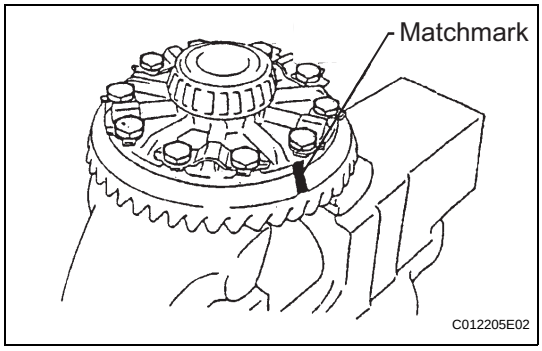

20. REMOVE DIFFERENTIAL RING GEAR

(a) Place matchmarks on the ring gear and differential case.
(b) Using a screwdriver and hammer, pry out the lock plates.
(c) Remove the 10 ring gear set bolts and 5 lock plates.

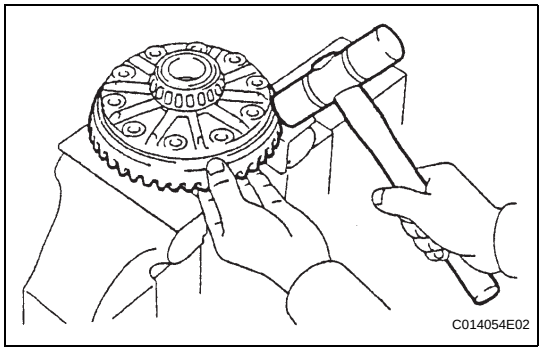

(d) Using a plastic-faced hammer, tap on the ring gear to separate it from the differential case.

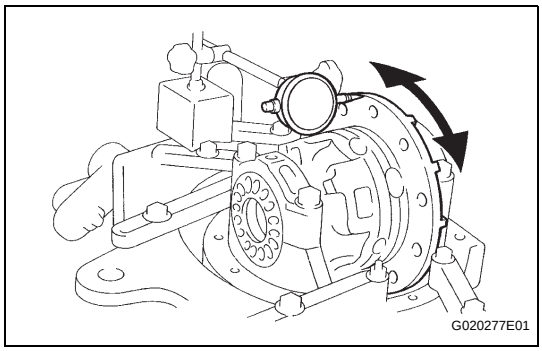

21. INSPECT DIFFERENTIAL CASE ASSEMBLY RUNOUT

(a) Install the rear differential case bearing onto the differential case.
(b) Install the differential case onto the differential carrier.
(c) Install the 2 bearing caps onto the differential carrier with the 4 bolts.
Torque: 85 N*m (870 kgf*cm, 63 ft.*lbf)
(d) Using a dial indicator, measure the differential case runout.
Maximum runout:
0.07 mm (0.0028 in.)
(e) Remove the differential case.
(f) Remove the rear differential case bearing.

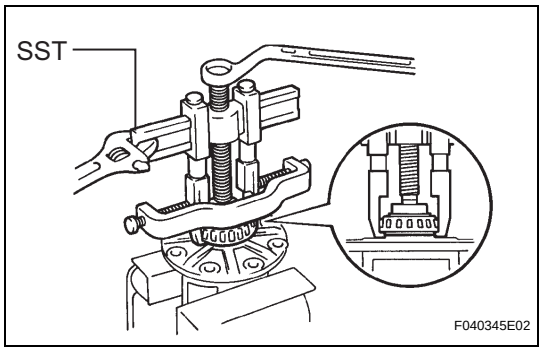

22. REMOVE REAR DIFFERENTIAL CASE BEARING

(a) Using SST, remove the 2 bearings from the differential case.

SST 09950-40011 (09951-04020, 09952-04010, 09953-04030, 09954-04010, 09955-04061, 09957-04010, 09958-04011), 09950-60010 (09951-00360)

HINT:

Do not remove the case bearing unless replacing the differential case.

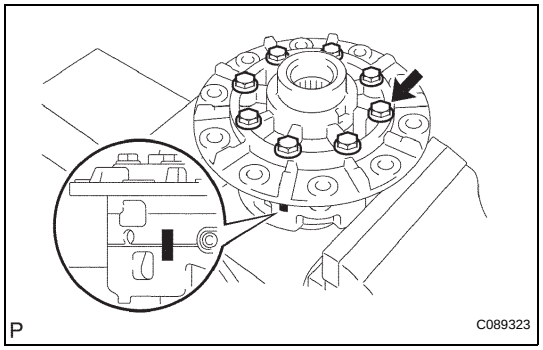

23. DISASSEMBLE DIFFERENTIAL CASE

(a) Place matchmarks on the LH and RH cases.

(b) Remove the 8 bolts.

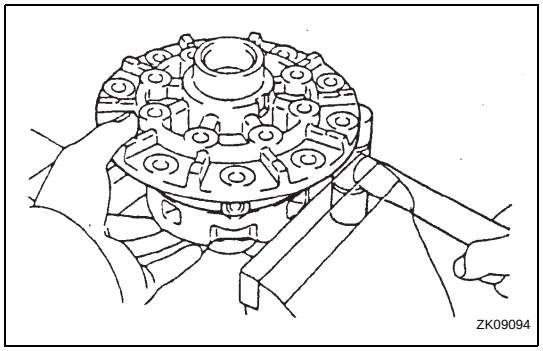

(c) Using a plastic hammer, separate the LH and RH cases.

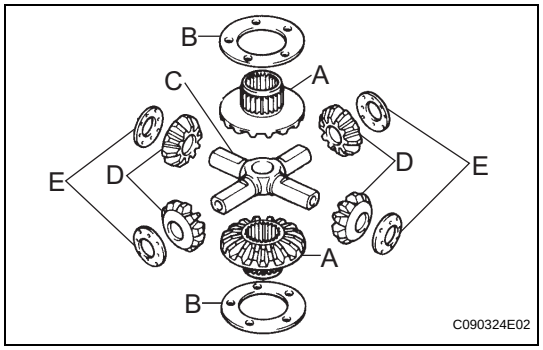

(d) Remove the following parts from the differential case.

A	Side gear
B	Side gear thrust washer
C	Spider
D	Pinion gear
E	Pinion gear thrust washer

INSPECTION

1. INSPECT DIFFERENTIAL PINION AND SIDE GEAR

(a) Check that there is no damage to the differential pinion or differential side gear.
If the differential pinion and/or differential side gear is damaged, replace the differential.

2. INSPECT DIFFERENTIAL CASE

(a) Check that the differential case is not damaged.
If the differential case is damaged, replace it.

REASSEMBLY

1. ASSEMBLE DIFFERENTIAL CASE

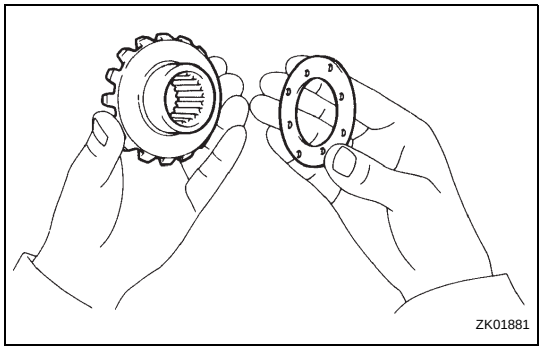
ZK01881

(a) Install the rear differential side gear thrust washer onto the rear differential side gear.
(b) Install the rear differential pinion thrust washer and rear differential pinion onto the rear differential spider.
(c) Fix the differential case RH.

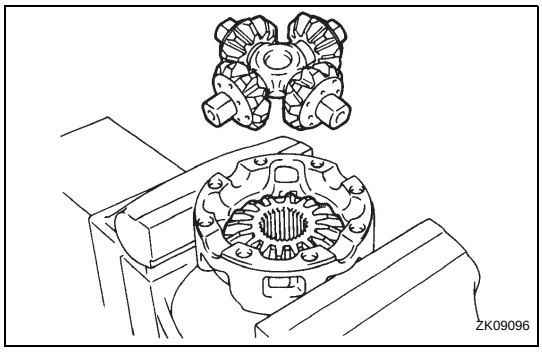
ZK09096

(d) Install the rear differential side gear and rear differential spider onto the differential case RH.

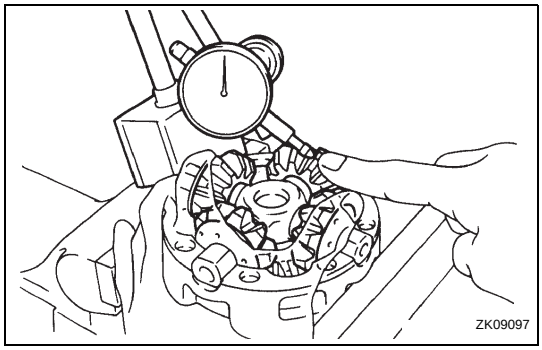
ZK09097

(e) Using a dial indicator, measure the differential case RH side backlash while holding the pinion toward the case.
Backlash:
0.05 to 0.20 mm (0.002 to 0.008 in.)
(f) Remove the rear differential spider from the differential case RH.

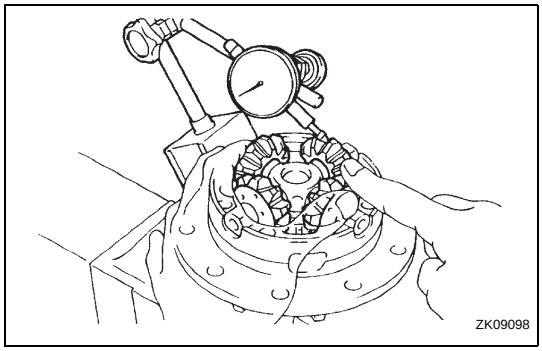
ZK09098

(g) Install the rear differential side gear and rear differential spider onto the differential case LH.
(h) Using a dial indicator, measure the differential case LH side backlash while holding the pinion toward the case.
Backlash:
0.05 to 0.20 mm (0.002 to 0.008 in.)
If the backlash is not within the specification, install 2 side gear thrust washers of a different thickness.

Thrust washer thickness

Thickness mm (in.)	Thickness mm (in.)
0.9 (0.0354)	1.2 (0.0472)
1.0 (0.0394)	1.3 (0.0512)
1.1 (0.0433)	-

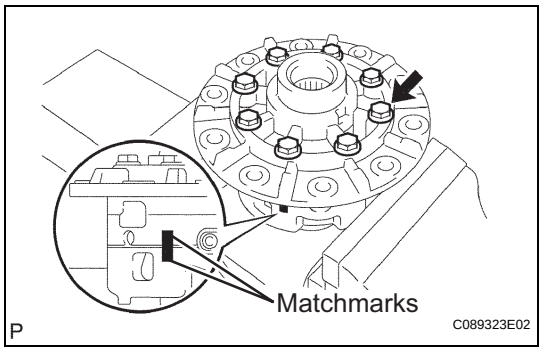

(i) Align the matchmarks and assemble the RH and LH cases.
(j) Using a plastic hammer, install the differential case.
(k) Install the 8 bolts.
Torque: 47 N*m (480 kgf*cm, 35 ft.*lbf)

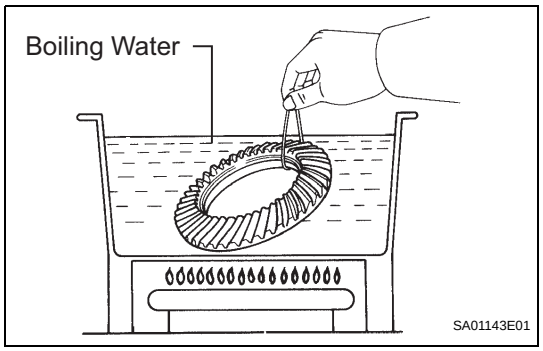

2. INSTALL DIFFERENTIAL RING GEAR

(a) Clean the contact surfaces of the differential case and ring gear.
(b) Heat the ring gear in water that is approximately 100°C (212°F).
(c) Carefully remove the ring gear from the boiling water.
(d) After the moisture on the ring gear has completely evaporated, quickly install the ring gear onto the differential case.

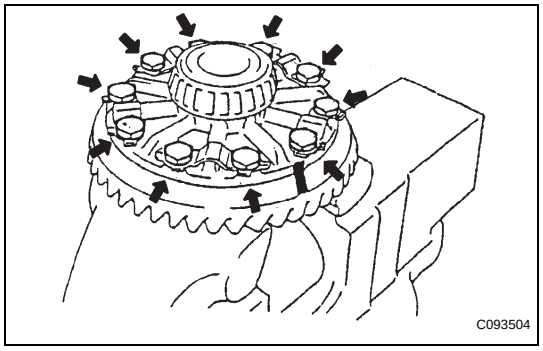

(e) Align the matchmarks on the ring gear with those of the differential case.
(f) Temporarily install 5 new lock plates and the 10 bolts.
(g) After the ring gear cools down, install the 10 bolts by diametrically tightening the bolts uniformly in several steps.
Torque: 97 N*m (989 kgf*cm, 72 ft.*lbf)

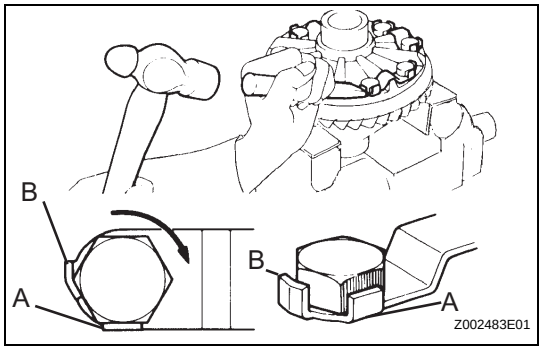

(h) Using a chisel and hammer, stake the 5 lock plates.
HINT:
Strike the tab labeled A so that it is flush with the flat surface of the bolt. Strike the tab labeled B so that half of the tab is in contact with the bolt as shown in the illustration.

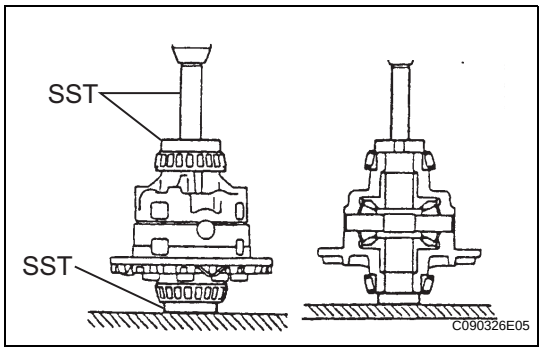

3. INSTALL REAR DIFFERENTIAL CASE BEARING

(a) Using SST and a press, press the bearing onto the differential case.

SST 09950-60010 (09951-00430, 09951-00480, 09951-00470, 09951-00550), 09950-70010 (09951-07150, 09951-00560, 09951-00570)

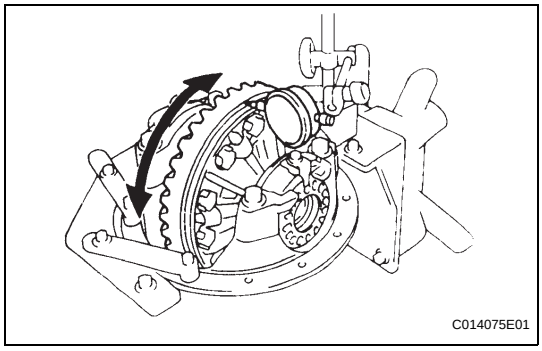

4. INSPECT DIFFERENTIAL RING GEAR RUNOUT

(a) Install the differential case on the carrier, and install the 2 adjusting nuts so that there is no play in the bearing.

(b) Install the 2 bearing caps with the 4 bolts.

Torque: 85 N*m (870 kgf*cm, 63 ft.*lbf)

(c) Using a dial indicator, measure the runout of the ring gear.

Maximum runout:
0.07 mm (0.0028 in.)

(d) Remove the 2 bearing caps, 2 adjusting nuts and the differential case.

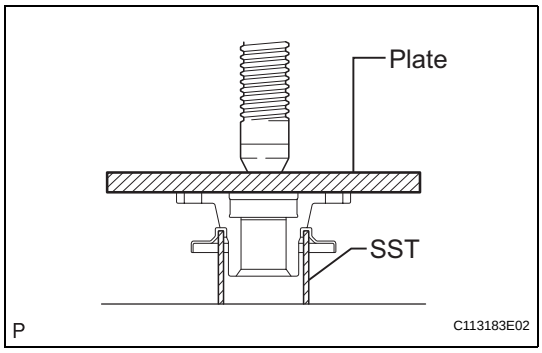

5. INSTALL REAR DIFFERENTIAL DUST DEFLECTOR

(a) Using SST, a plate and a press, press in a new dust deflector.

SST 09636-20010

NOTICE:
Be careful not to damage the dust deflector.

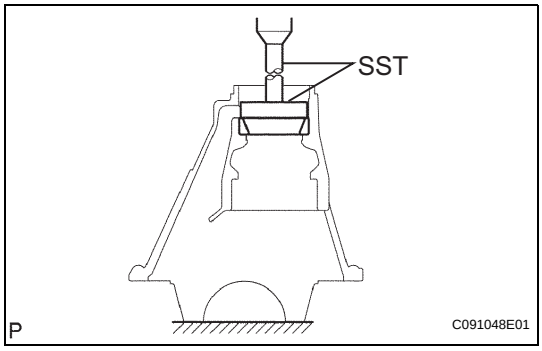

6. INSTALL REAR DRIVE PINION FRONT TAPERED ROLLER BEARING

(a) Using a brass bar and hammer, tap in the oil storage ring.

(b) Using SST and a press, press in the roller bearing (outer) to the carrier.

SST 09316-60011 (09316-00011, 09316-00021)

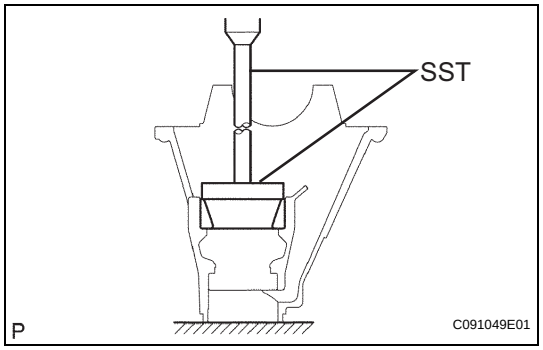

7. INSTALL REAR DRIVE PINION REAR TAPERED ROLLER BEARING

(a) Using SST and a press, press the roller bearing (outer) into the carrier.
SST 09316-60011 (09316-00041, 09316-00011)

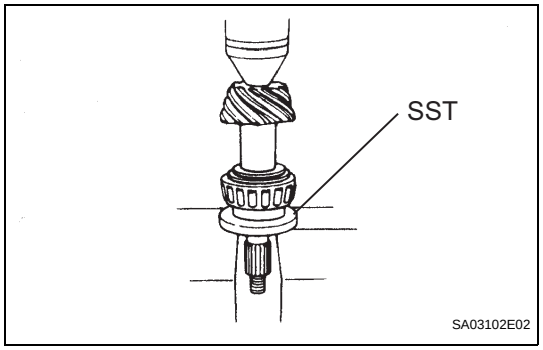

8. INSTALL REAR DRIVE PINION REAR TAPERED ROLLER BEARING

(a) Install the plate washer onto the drive pinion.
HINT:
First fit a washer with the same thickness as the removed washer, and then check the tooth contact pattern. Replace the washer with one of a different thickness if necessary.

(b) Using SST and a press, press the roller bearing (inner) onto the drive pinion.
SST 09506-30012

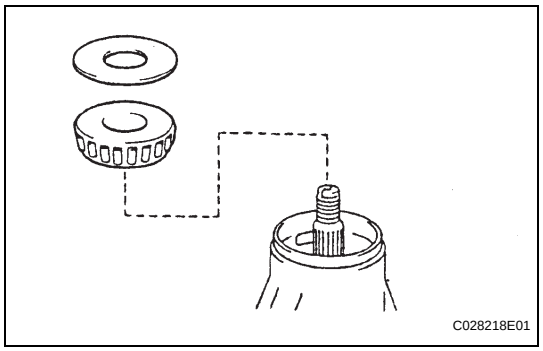

9. ADJUST DIFFERENTIAL DRIVE PINION PRELOAD

(a) Install the drive pinion, rear drive pinion tapered roller bearing and rear differential drive pinion oil slinger.
HINT:
Assemble the spacer and oil seal after adjusting the gear contact pattern.

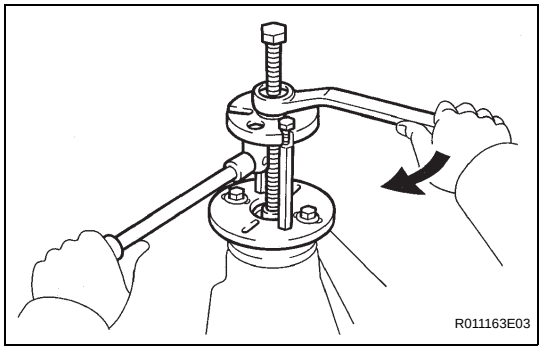

(b) Using SST, install the companion flange.
SST 09950-30012 (09951-03010, 09953-03010, 09954-03010, 09955-03030, 09956-03030)
NOTICE:
Before using SST (center bolt), apply hypoid gear oil to its threads and tip.

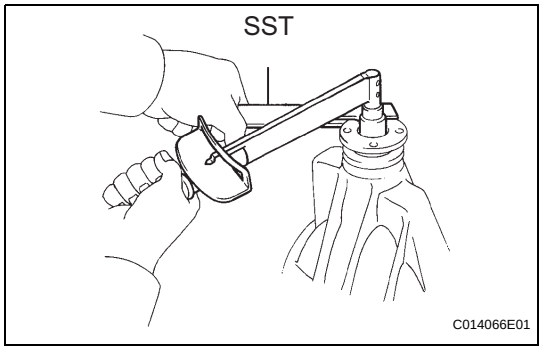

(c) Adjust the drive pinion preload by tightening the companion flange nut.

(d) Using SST to hold the companion flange in place, torque the nut.
SST 09330-00021
Torque: 370 N*m (3,770 kgf*cm, 273 ft.*lbf) or less
NOTICE:
- **As there is no spacer, torque a little at a time. Be careful not to overtighten the nut.**

DF

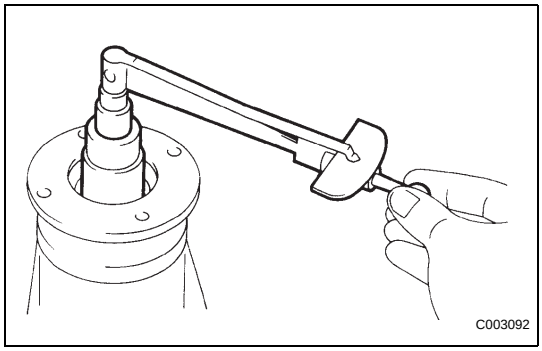

- **Apply hypoid gear oil to the nut.**

(e) Using a torque wrench, measure the preload.
Preload (at starting)

Bearing	Standard
New bearing	1.05 to 1.64 N*m (10.7 to 16.7 kgf*cm, 9.3 to 14.5 in.*lbf)
Used bearing	0.56 to 0.85 N*m (5.7 to 8.7 kgf*cm, 4.9 to 7.5 in.*lbf)

NOTICE:
For a more accurate measurement, rotate the bearing forward and backward several times before measuring.

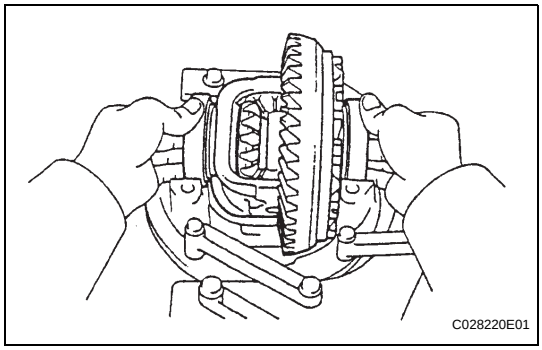

10. INSTALL DIFFERENTIAL CASE ASSEMBLY

(a) Place the 2 bearing outer races on their respective bearings.
HINT:
Do not interchange the right and left races.

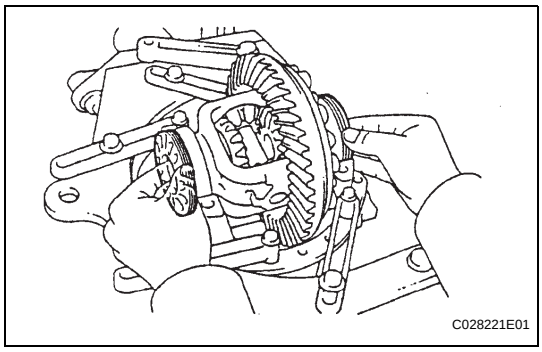

11. INSTALL REAR DIFFERENTIAL BEARING ADJUSTING NUT

(a) Install the 2 adjusting nuts onto the carrier, making sure the nuts are threaded properly.

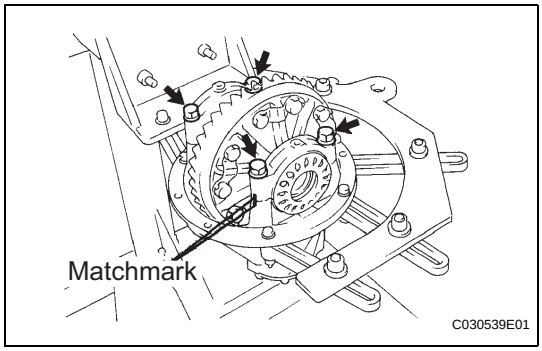

12. INSPECT AND ADJUST DIFFERENTIAL RING GEAR AND DIFFERENTIAL DRIVE PINION BACKLASH

(a) Align the matchmarks on the cap and carrier.

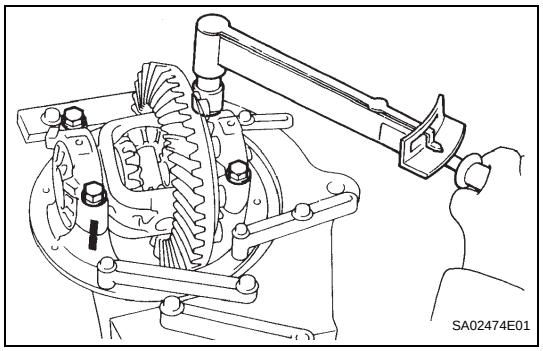

(b) Install the right and left bearing caps with the 4 bolts.
Torque: 85 N*m (870 kgf*cm, 63 ft.*lbf)
If the bearing cap does not fit tightly on the carrier, the adjusting nuts are not threaded properly.
HINT:
Reinstall the adjusting nuts if necessary.

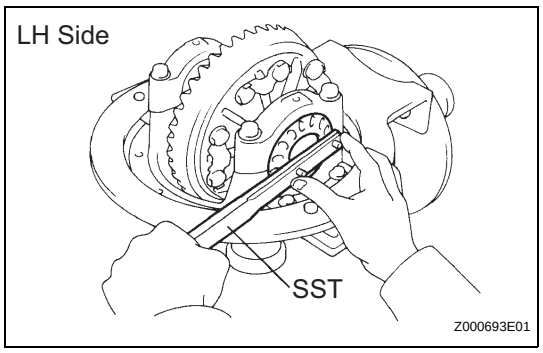

(c) Loosen the 4 bearing cap bolts to the point where the adjusting nuts can be turned using SST.
(d) Using SST, torque the adjusting nut on the ring gear side until the ring has a backlash of about 0.2 mm (0.008 in.).
SST 09504-00011

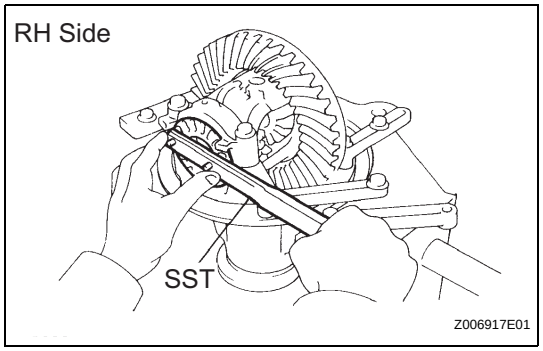

(e) While turning the ring gear, use SST to fully tighten the adjusting nut on the drive pinion side. After the bearings have settled, loosen the adjusting nut on the drive pinion side.
(f) Using SST, tighten the adjusting nut 1 to 1.5 notches from the 0 preload position.
SST 09504-00011

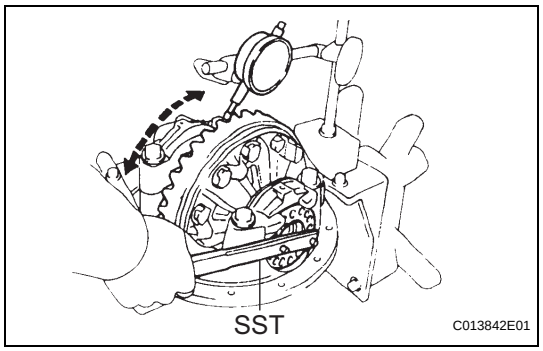

(g) Using a dial indicator, adjust the ring gear backlash until it is within the specification.
Standard backlash:
0.13 to 0.18 mm (0.0051 to 0.0071 in.)
HINT:
- The backlash is adjusted by turning the left and right adjusting nuts an equal amount. For example, loosen the nut on the right side one notch and loosen the nut on the left side one notch.
- Perform the measurement at 3 or more positions around the circumference of the ring gear.

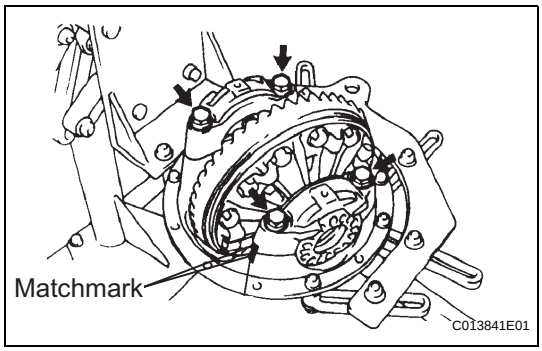

(h) Torque the bearing cap bolts.
Torque: 85 N*m (870 kgf*cm, 63 ft.*lbf)

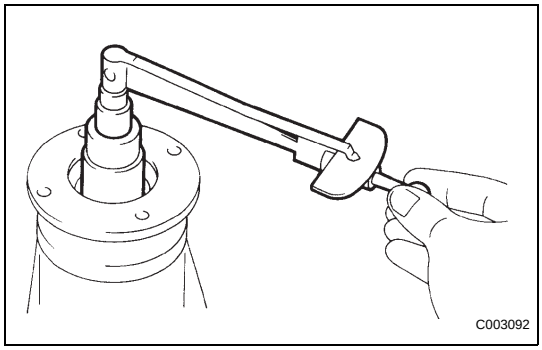

13. INSPECT TOTAL PRELOAD

(a) Using a torque wrench, measure the preload with the teeth of the drive pinion and ring gear in contact.
Total preload (at starting):
Drive pinion preload plus 0.39 to 0.59 N*m (4.0 to 6.0 kgf*cm, 3.5 to 5.2 in.*lbf)
If necessary, disassemble and inspect the differential.

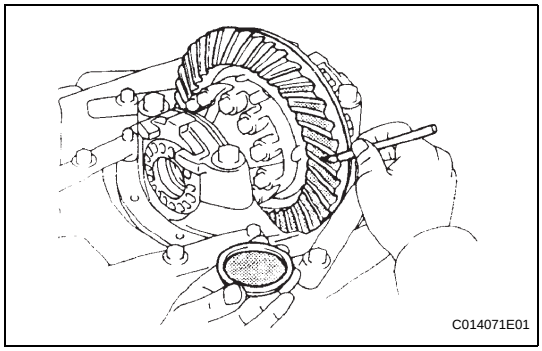

14. INSPECT TOOTH CONTACT BETWEEN RING GEAR AND DRIVE PINION

(a) Coat 3 or 4 teeth at 3 different positions on the ring gear with prussian blue.
(b) Hold the companion flange firmly in place and rotate the ring gear in both directions.

(c) Inspect the tooth contact pattern.

Proper Contact

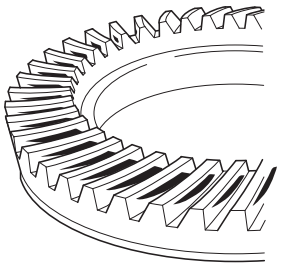

Drive Side

Toe Contact

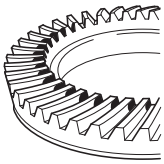

Face Contact

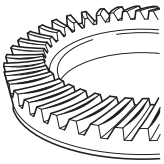

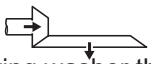

Select an adjusting washer that will shift the drive pinion closer to the ring gear.

Heel Contact

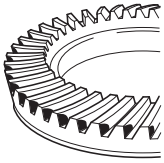

Flank Contact

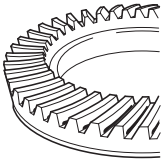



Select an adjusting washer that will shift the drive pinion away from the ring gear.

Coast Side

Heel Contact

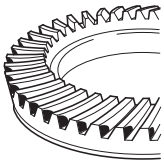

Flank Contact

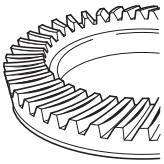

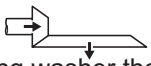

Select an adjusting washer that will shift the drive pinion closer to the ring gear.

Toe Contact

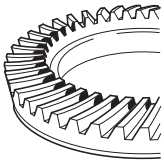

Face Contact

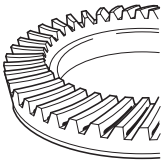

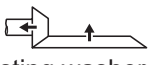

Select an adjusting washer that will shift the drive pinion away from the ring gear.

DF

P

C113184E01

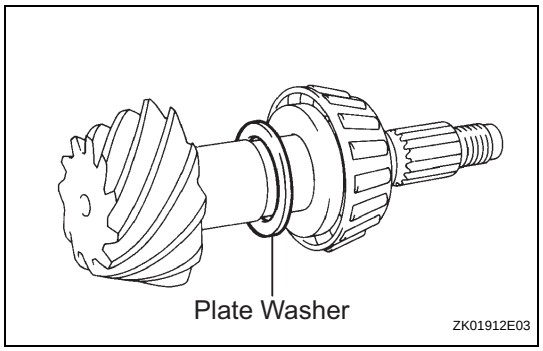

If the teeth are not engaged properly, use the following chart to select a proper washer.

Plate Washer Thickness

Thickness mm (in.)	Thickness mm (in.)
1.69 to 1.71 (0.0665 to 0.0673)	2.02 to 2.04 (0.0795 to 0.0803)
1.72 to 1.74 (0.0677 to 0.0685)	2.05 to 2.07 (0.0807 to 0.0815)
1.75 to 1.77 (0.0689 to 0.0697)	2.08 to 2.10 (0.0819 to 0.0827)
1.78 to 1.80 (0.0701 to 0.0709)	2.11 to 2.13 (0.0831 to 0.0839)
1.81 to 1.83 (0.0713 to 0.0720)	2.14 to 2.16(0.0843 to 0.0850)
1.84 to 1.86 (0.0724 to 0.0732)	2.17 to 2.19 (0.0854 to 0.0862)
1.87 to 1.89 (0.0736 to 0.0744)	2.20to 2.22 (0.0866 to 0.0874)
1.90 to 1.92 (0.0748 to 0.0756)	2.23 to 2.25 (0.0878 to 0.0886)
1.93 to 1.95 (0.0760 to 0.0768)	2.26 to 2.28 (0.0890 to 0.0898)
1.96 to 1.98 (0.0772 to 0.0780)	2.29 to 2.31 (0.0902 to 0.0909)
1.99 to 2.01 (0.0783 to 0.0791)	2.32 to 2.34 (0.0913 to 0.0921)

15. REMOVE REAR DRIVE PINION NUT (See page DF-49)

16. REMOVE REAR DRIVE PINION COMPANION FLANGE SUB-ASSEMBLY

17. REMOVE REAR DIFFERENTIAL DRIVE PINION OIL SLINGER

18. REMOVE REAR DRIVE PINION FRONT TAPERED ROLLER BEARING (See page DF-51)

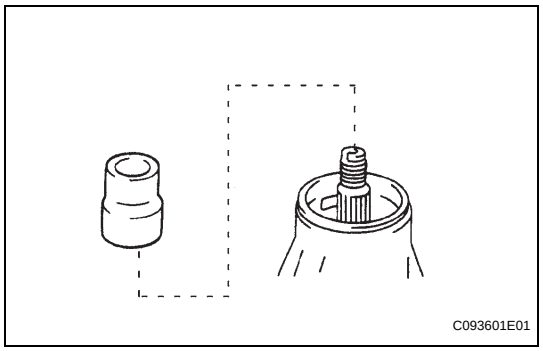

19. INSTALL REAR DIFFERENTIAL DRIVE PINION BEARING SPACER

(a) Install a new bearing spacer onto the drive pinion.

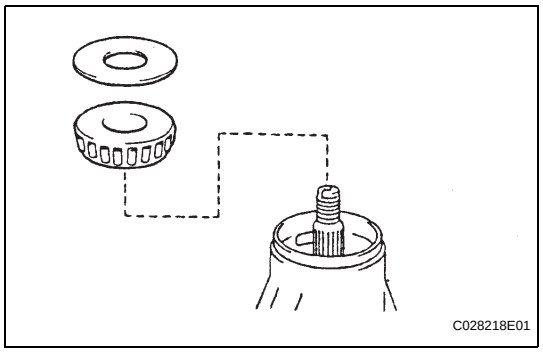

20. INSTALL REAR DRIVE PINION FRONT TAPERED ROLLER BEARING

21. INSTALL REAR DIFFERENTIAL DRIVE PINION OIL SLINGER

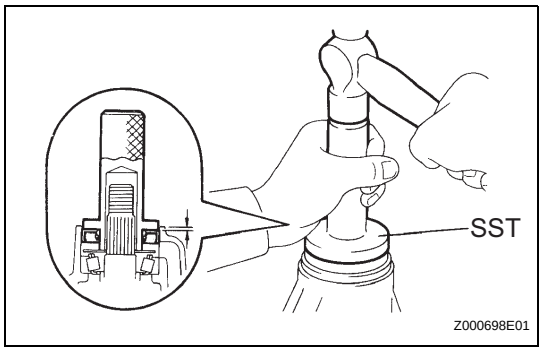

22. INSTALL REAR DIFFERENTIAL CARRIER OIL SEAL

(a) Apply MP grease to a new oil seal.

(b) Using SST and a hammer, tap in the oil seal.

SST 09554-30011

Oil seal depth:

0.55 to 1.45 mm(0.0213 to 0.0567)

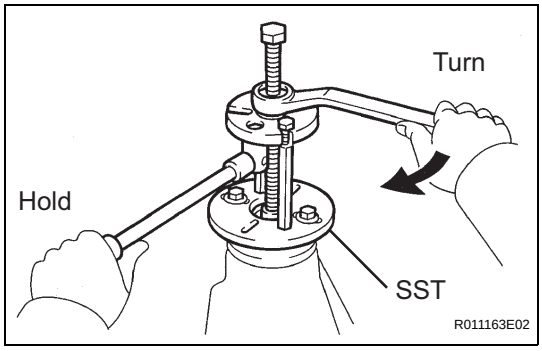

23. INSTALL REAR DRIVE PINION COMPANION FLANGE SUB-ASSEMBLY

(a) Using SST, install the companion flange onto the drive pinion.

SST 09950-30012 (09951-03010, 09953-03010, 09954-03010, 09955-03030, 09956-03030)

NOTICE:

Before using SST (center bolt), apply hypoid gear oil to its threads and tip.

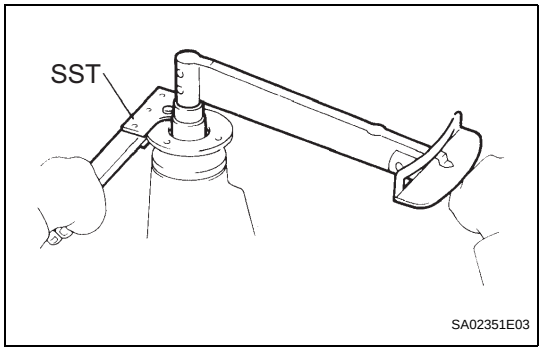

(b) Coat the threads of a new nut with hypoid gear oil.

(c) Using SST to hold the flange, torque the nut.

SST 09330-00021

Torque: 370 N*m (3,770 kgf*cm, 273 ft.*lbf) or less

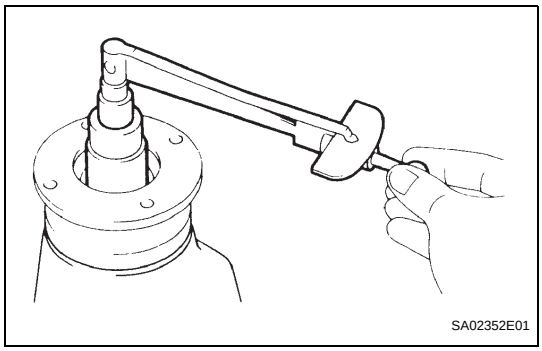

24. INSPECT DRIVE PINION PRELOAD

(a) Using a torque wrench, measure the preload of the backlash between the drive pinion and ring gear.

Preload (at starting)

Bearing	Standard
New bearing	1.05 to 1.64 N*m (11 to 17 kgf*cm, 9.3 to 15 in.*lbf)
Used bearing	0.56 to 0.85 N*m (6 to 9 kgf*cm, 4.9 to 7.5 in.*lbf)

If the preload is greater than the maximum, replace the bearing spacer.

If the preload is less than the minimum, retighten the nut with 13 N*m (130 kgf*cm, 9 ft.*lbf) of torque at a time until the specified preload is reached.

Torque: 370 N*m (3,770 kgf*cm, 273 ft.*lbf) or less

If the maximum torque is exceeded while retightening the nut, replace the bearing spacer and repeat the preload adjusting procedure.

HINT:

Do not loosen the pinion nut to reduce the preload.

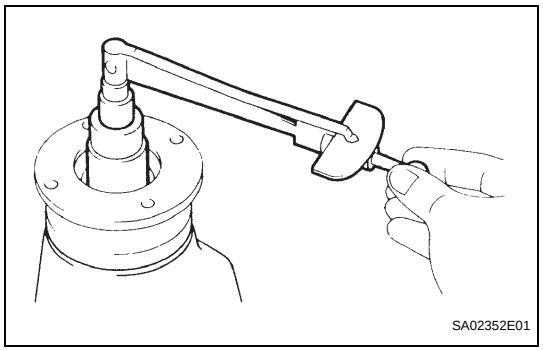
SA02352E01

25. INSPECT TOTAL PRELOAD

(a) Using a torque wrench, measure the preload.
HINT:
Bolt without torque specifications are shown in the service data (see page SS-43).
If necessary, disassemble and inspect the differential.

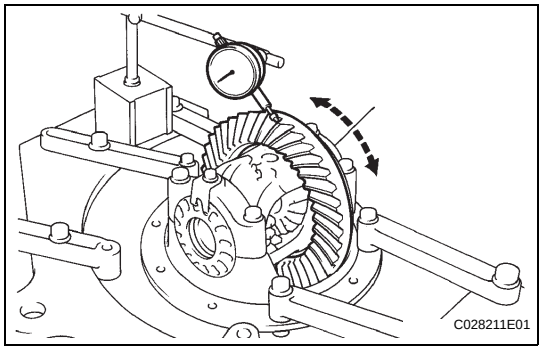
C028211E01

26. INSPECT DIFFERENTIAL RING GEAR BACKLASH

(a) Using a dial indicator, check the backlash of the ring gear.
Standard backlash:
0.13 to 0.18 mm (0.0051 to 0.0071 in.)
If the backlash is not as specified, adjust the side bearing preload or repair as necessary.
HINT:
Perform the measurements at 3 or more positions around the circumference of the ring gear.

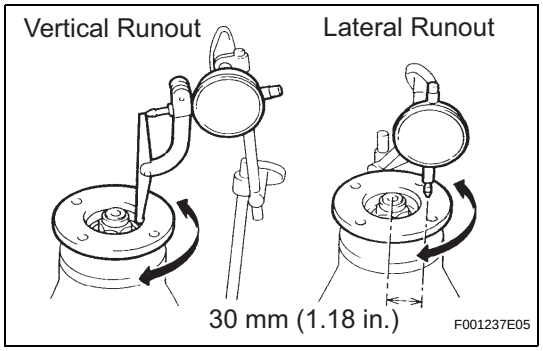

27. INSPECT RUNOUT OF REAR DRIVE PINION COMPANION FLANGE SUB-ASSEMBLY

(a) Using a dial indicator, measure the runout of the drive pinion companion flange vertically and laterally.
Maximum runout

Runout	Maximum
Vertical runout	0.10 mm (0.0039 in.)
Lateral runout	0.10 mm (0.0039 in.)

If the runout is greater than the maximum, replace the companion flange.

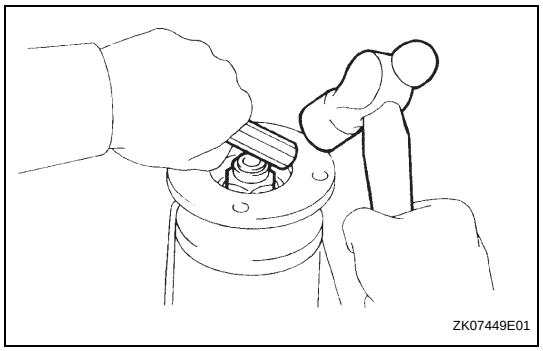
ZK07449E01

28. STAKE DRIVE PINION NUT

(a) Using a chisel and hammer, stake the nut.

DF

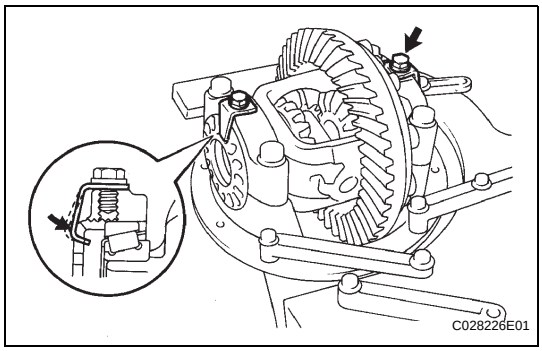

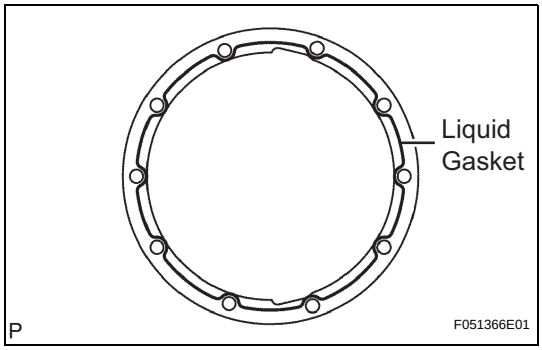

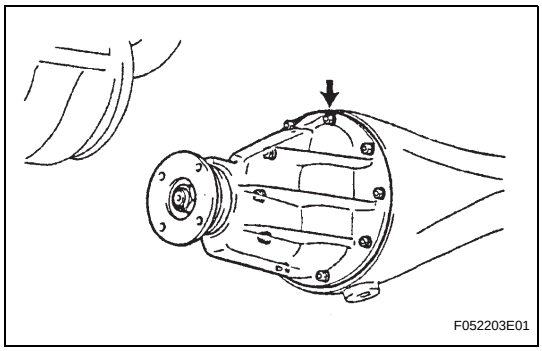

29. **INSTALL REAR DIFFERENTIAL BEARING ADJUSTING NUT LOCK**
    (a) Install 2 new adjusting locks onto the bearing caps with the 2 bolts.
    Torque: 13 N*m (130 kgf*cm, 9 ft.*lbf)
    (b) Bend the nut locks.
    HINT:
    Perform the measurements at 3 or more positions around the circumference of the ring gear.

INSTALLATION

1. **INSTALL REAR DIFFERENTIAL CARRIER ASSEMBLY**
    (a) Remove any dust and oil from the differential carrier assembly and the contact surfaces of the axle housing.
    (b) Apply liquid gasket to both sides of a new gasket.
    NOTICE:
    Do not apply the liquid gasket to the stud bolt.
    (c) Install a new gasket and the differential carrier assembly with the 10 nuts and 10 washers.
    Torque: 25 N*m (255 kgf*cm, 18 ft.*lbf)
2. **INSTALL REAR AXLE SHAFT LH OIL SEAL (See page AH-22)**
3. **INSTALL REAR AXLE SHAFT RH OIL SEAL**
    HINT:
    Use the same procedure as for the LH side.
4. **INSTALL REAR AXLE SHAFT LH (See page AH-22)**
5. **INSTALL REAR AXLE SHAFT RH**
    HINT:
    Use the same procedure as for the LH side.
6. **INSPECT REAR AXLE SHAFT BEARING (See page AH-2)**
7. **INSTALL REAR SPEED SENSOR LH (See page BC-198)**
8. **INSTALL REAR SPEED SENSOR RH**
    HINT:
    Use the same procedure as for the LH side.
9. **INSTALL PARKING BRAKE CABLE LH (See page AH-23)**
10. **INSTALL PARKING BRAKE CABLE RH**
    HINT:
    Use the same procedure as for the LH side.
11. **APPLY HIGH TEMPERATURE GREASE (See page PB-19)**
12. **INSTALL PARKING BRAKE SHOE (See page PB-19)**

13. **INSTALL PARKING BRAKE SHOE STRUT (See page PB-19)**
14. **INSTALL PARKING BRAKE SHOE RETURN TENSION SPRING (See page PB-19)**
15. **CHECK PARKING BRAKE INSTALLATION (See page PB-20)**
16. **INSTALL REAR DISC (See page PB-20)**
17. **ADJUST PARKING BRAKE SHOE CLEARANCE (See page PB-20)**
18. **INSTALL REAR DISC BRAKE CALIPER ASSEMBLY LH (See page AH-23)**
19. **INSTALL REAR DISC BRAKE CALIPER ASSEMBLY RH**
    HINT:
    Use the same procedure as for the LH side.
20. **INSTALL PROPELLER SHAFT ASSEMBLY (for 2WD) (See page PR-14)**
21. **INSTALL PROPELLER SHAFT ASSEMBLY (for 4WD) (See page PR-14)**
22. **INSTALL REAR WHEEL**
    Torque: 112 N*m (1,137 kgf*cm, 82 ft.*lbf)
23. **CONNECT CABLE TO NEGATIVE BATTERY TERMINAL**
    Torque: 3.9 N*m (40 kgf*cm, 35 in.*lbf)
24. **INSPECT DIFFERENTIAL OIL (See page DF-3)**
25. **CHECK FOR DIFFERENTIAL OIL LEAKAGE**
26. **FILL RESERVOIR WITH BRAKE FLUID (See page BR-5)**
27. **BLEED BRAKE LINE (See page BR-5)**
28. **CHECK FLUID LEVEL IN RESERVOIR (See page BR-7)**
29. **CHECK FOR BRAKE FLUID LEAKAGE**
30. **INSPECT PARKING BRAKE LEVER TRAVEL (See page PB-4)**
31. **ADJUST PARKING BRAKE LEVER TRAVEL (See page PB-4)**
32. **CHECK VSC SENSOR SIGNAL**
    (See page BC-28)

REAR DIFFERENTIAL CARRIER ASSEMBLY (w/ Differential Lock)

COMPONENTS

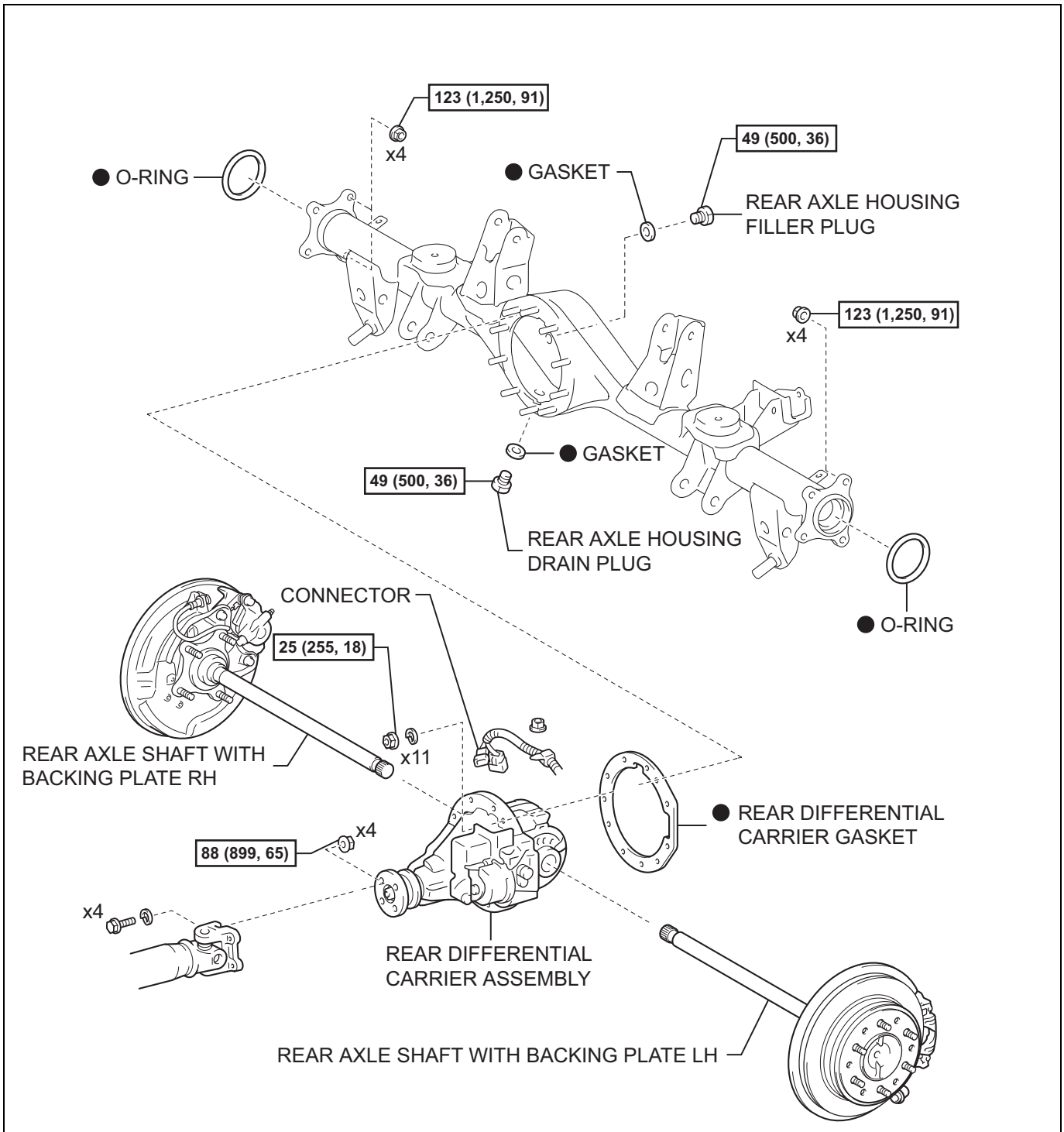

N*m (kgf*cm, ft*lbf) : Specified torque

● Non-reusable part

P

C135465E01

DF

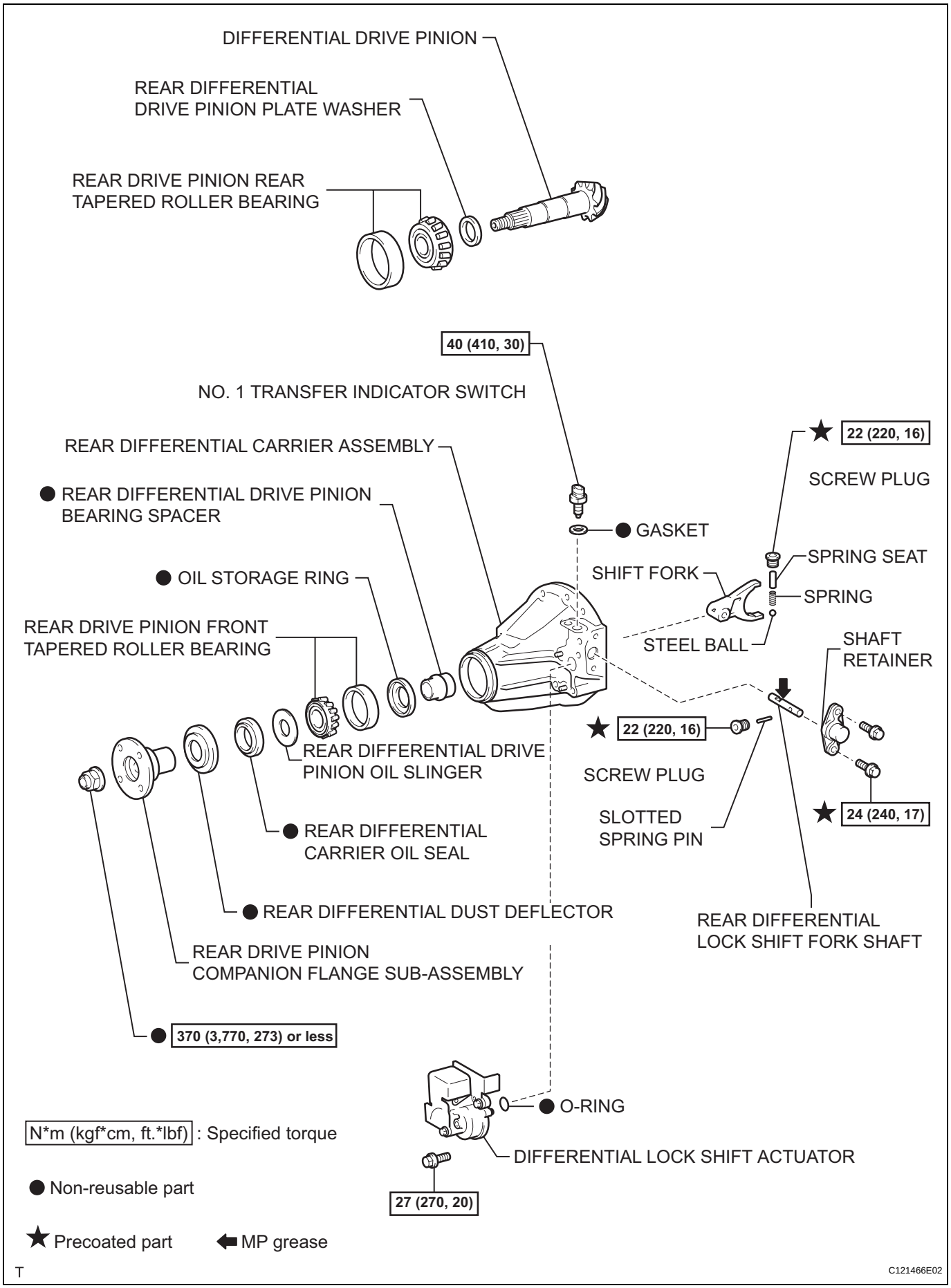
DIFFERENTIAL DRIVE PINION
REAR DIFFERENTIAL DRIVE PINION PLATE WASHER
REAR DRIVE PINION REAR TAPERED ROLLER BEARING
40 (410, 30)
NO. 1 TRANSFER INDICATOR SWITCH
REAR DIFFERENTIAL CARRIER ASSEMBLY
● REAR DIFFERENTIAL DRIVE PINION BEARING SPACER
● OIL STORAGE RING
REAR DRIVE PINION FRONT TAPERED ROLLER BEARING
★ 22 (220, 16)
SCREW PLUG
● GASKET
SPRING SEAT
SHIFT FORK
SPRING
STEEL BALL
SHAFT RETAINER
★ 22 (220, 16)
SCREW PLUG
SLOTTED SPRING PIN
★ 24 (240, 17)
REAR DIFFERENTIAL DRIVE PINION OIL SLINGER
● REAR DIFFERENTIAL CARRIER OIL SEAL
● REAR DIFFERENTIAL DUST DEFLECTOR
REAR DIFFERENTIAL LOCK SHIFT FORK SHAFT
REAR DRIVE PINION COMPANION FLANGE SUB-ASSEMBLY
● 370 (3,770, 273) or less
● O-RING
DIFFERENTIAL LOCK SHIFT ACTUATOR
27 (270, 20)
N*m (kgf*cm, ft.*lbf) : Specified torque
● Non-reusable part
★ Precoated part
MP grease
T
C121466E02

DF

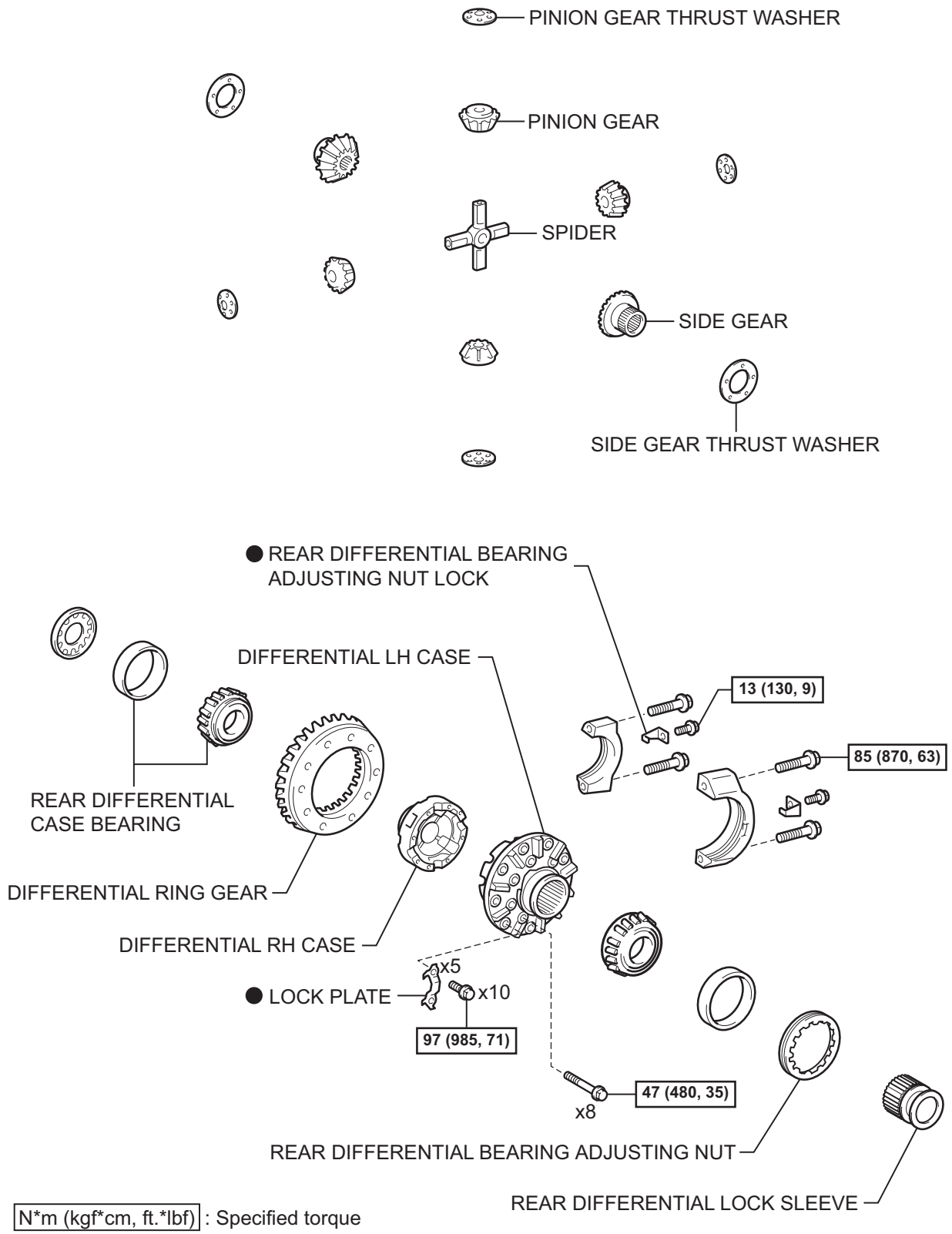

N*m (kgf*cm, ft.*lbf) : Specified torque

● Non-reusable part

T

C121465E02

DF

REMOVAL

1. **DISCONNECT CABLE FROM NEGATIVE BATTERY TERMINAL**
2. **REMOVE REAR WHEEL**
3. **DRAIN BRAKE FLUID**
   HINT:
   Immediately wash off any brake fluid that comes into contact with any painted surfaces.
4. **DRAIN DIFFERENTIAL OIL**
5. **REMOVE REAR DISC BRAKE CALIPER ASSEMBLY LH (See page AH-19)**
6. **REMOVE REAR DISC BRAKE CALIPER ASSEMBLY RH**
   HINT:
   Use the same procedure as for the LH side.
7. **REMOVE REAR DISC (See page PB-17)**
8. **REMOVE PARKING BRAKE SHOE RETURN TENSION SPRING (See page PB-17)**
9. **REMOVE PARKING BRAKE SHOE STRUT LH (See page PB-17)**
10. **REMOVE PARKING BRAKE SHOE (See page PB-17)**
11. **SEPARATE PARKING BRAKE CABLE LH (See page AH-19)**
12. **REMOVE PARKING BRAKE CABLE RH**
    HINT:
    Use the same procedure as for the LH side.
13. **REMOVE REAR SPEED SENSOR (See page BC-198)**
14. **REMOVE REAR SPEED SENSOR RH**
    HINT:
    Use the same procedure as for the LH side.
15. **REMOVE REAR AXLE SHAFT RH (See page AH-19)**
16. **REMOVE REAR AXLE SHAFT LH**
    HINT:
    Use the same procedure as for the LH side.
17. **REMOVE REAR AXLE SHAFT LH OIL SEAL (See page AH-20)**
18. **REMOVE REAR AXLE SHAFT RH OIL SEAL**
    HINT:
    Use the same procedure as for the LH side.
19. **REMOVE REAR PROPELLER SHAFT ASSEMBLY (for 2WD) (See page PR-9)**
20. **REMOVE PROPELLER SHAFT ASSEMBLY (for 4WD) (See page PR-9)**

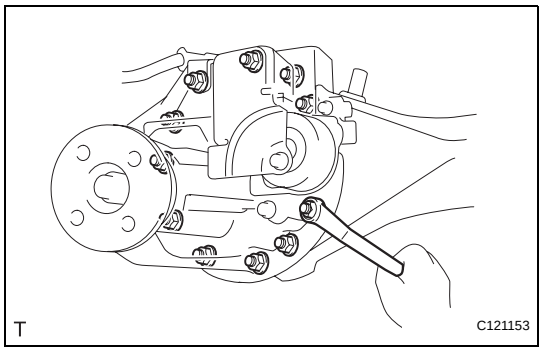

21. REMOVE REAR DIFFERENTIAL CARRIER ASSEMBLY

(a) Remove the 11 nuts and the differential carrier.

NOTICE:

Be careful not to damage the contact surface.

22. REMOVE REAR DIFFERENTIAL CARRIER GASKET

DISASSEMBLY

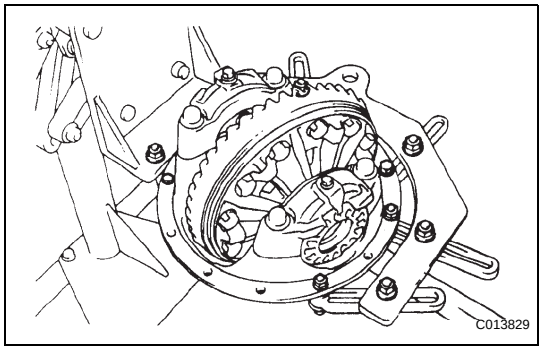

1. FIX REAR DIFFERENTIAL CARRIER ASSEMBLY

(a) Fix the rear differential carrier assembly to the overattachment.

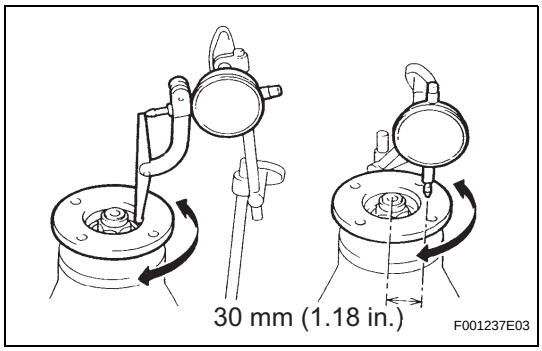

2. INSPECT REAR DRIVE PINION COMPANION FLANGE SUB-ASSEMBLY REAR

(a) Using a dial indicator, measure the runout of the companion flange vertically and horizontally.

Maximum runout:

Vertical runout: 0.10 mm (0.0039 in.)

Lateral runout: 0.10 mm (0.0039 in.)

If the runouts are not with the specifications, replace the companion flange.

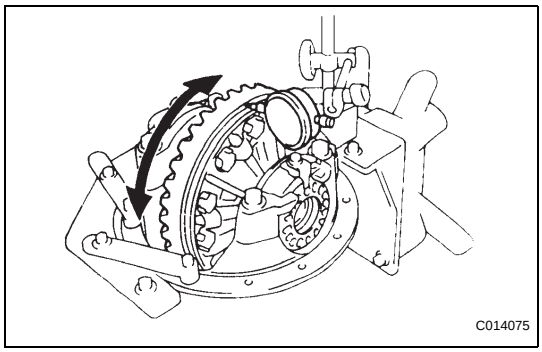

3. INSPECT RUNOUT OF DIFFERENTIAL RING GEAR

(a) Using a dial indicator, check the runout of the ring gear.

Maximum runout:

0.07 mm (0.0028 in.)

If the runout is greater than the maximum, replace the ring gear with a new one.

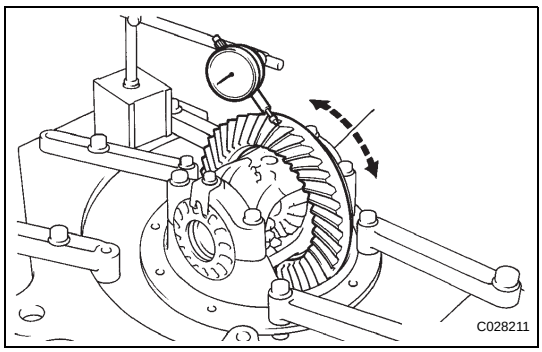

4. INSPECT DIFFERENTIAL RING GEAR BACKLASH

(a) Using a dial indicator, check the backlash of the ring gear.

Backlash:

0.13 to 0.18 mm (0.0051 to 0.0071 in.)

If the backlash is not within the specification, adjust or repair the side bearing preload as necessary.

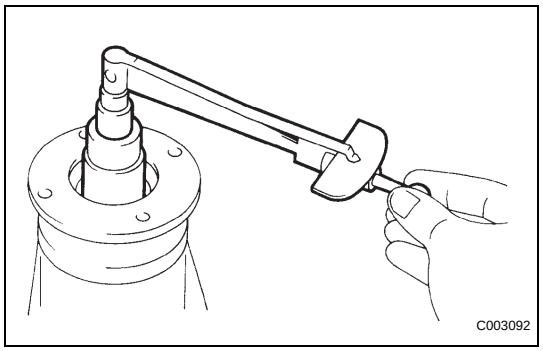

5. INSPECT DIFFERENTIAL DRIVE PINION PRELOAD

(a) Using a torque wrench, measure the preload of the backlash between the drive pinion and ring gear.
Preload (at starting):
0.56 to 0.85 N*m (5.7 to 8.7 kgf*cm, 5.0 to 7.5 in.*lbf)
If necessary, disassemble and inspect the differential assembly.

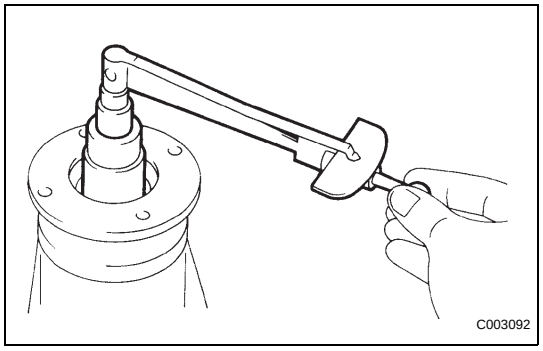

6. INSPECT TOTAL PRELOAD

(a) Using a torque wrench, measure the preload with the teeth of the drive pinion and ring gear in contact.
(b) Using a torque wrench, measure the total preload.
Total preload (at starting):
Drive pinion preload plus 0.39 to 0.59 N*m (4.0 to 6.0 kgf*cm, 3.5 to 5.2 in.*lbf)
If necessary, disassemble and inspect the differential.

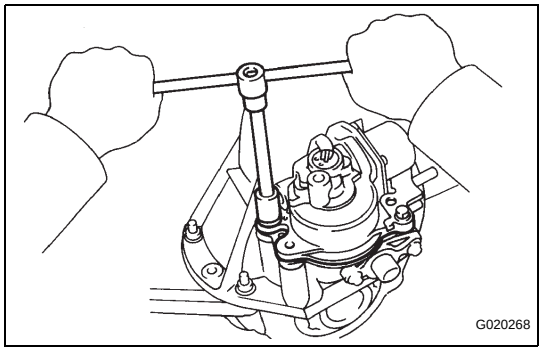

7. REMOVE DIFFERENTIAL LOCK SHIFT ACTUATOR

(a) Remove the 4 bolts and actuator from the differential carrier.
(b) Remove the O-ring.

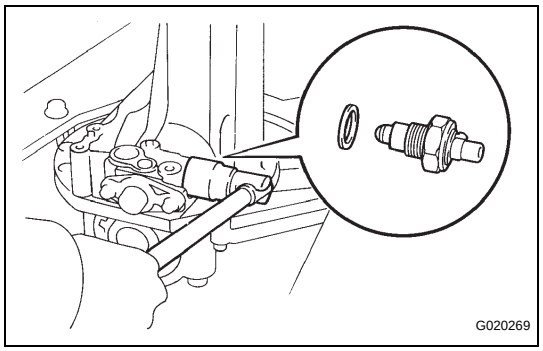

8. REMOVE NO.1 TRANSFER INDICATOR SWITCH

(a) Remove the indicator switch and gasket.

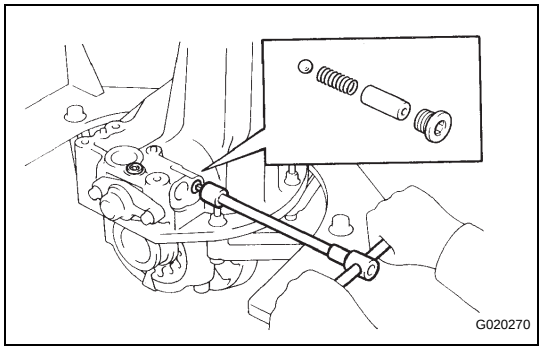

9. REMOVE REAR DIFFERENTIAL LOCK SHIFT FORK SHAFT

(a) Using a 6 mm hexagon wrench, remove the 2 screw plugs.
(b) Remove the spring seat, spring and ball.

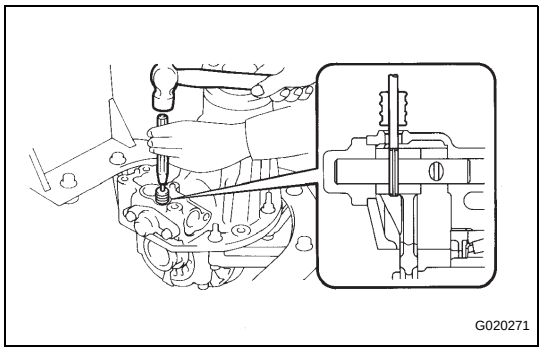

(c) Using a 5 mm pin punch and hammer, remove the slotted pin.

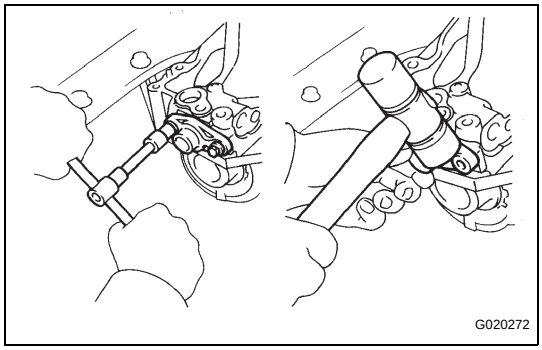

(d) Remove the 2 bolts from the shaft retainer.
(e) Using a plastic hammer, remove the shaft retainer.
(f) Remove the shift fork shaft.

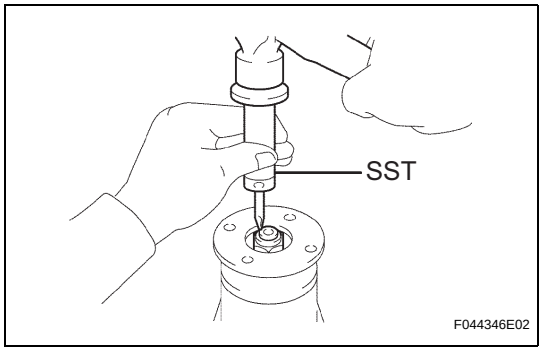

10. REMOVE REAR DRIVE PINION NUT

(a) Using SST and a hammer, loosen the staked part of the nut.
SST 09930-00010

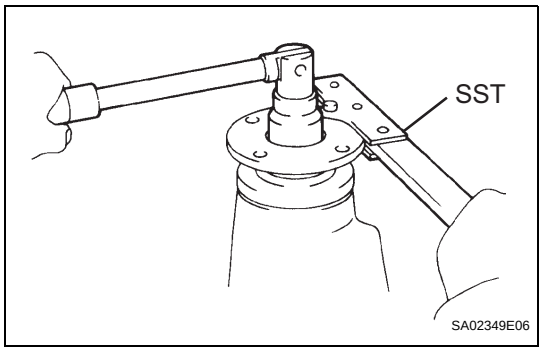

(b) Using SST to hold the drive pinion companion flange, remove the nut.
SST 09330-00021

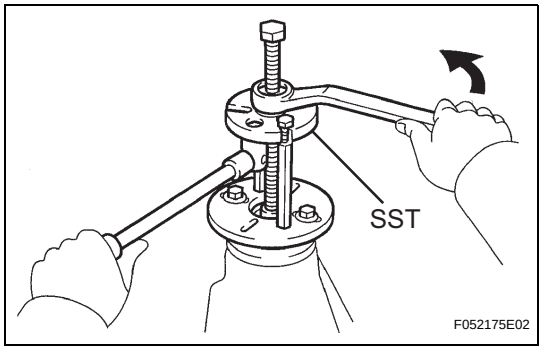

11. REMOVE REAR DRIVE PINION COMPANION FLANGE SUB-ASSEMBLY REAR

(a) Using SST, remove the drive pinion companion flange.
SST 09950-30012 (09951-03010, 09953-03010, 09954-03010, 09955-03030, 09956-03030)

DF

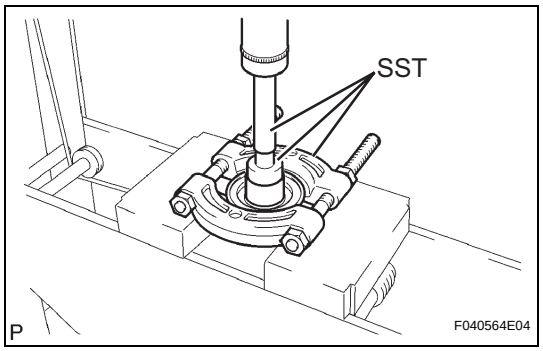

12. REMOVE REAR DIFFERENTIAL DUST DEFLECTOR

(a) Using SST and a press, remove the dust deflector.
SST 09950-60010 (09951-00380), 09950-70010 (09951-07150), 09950-00020

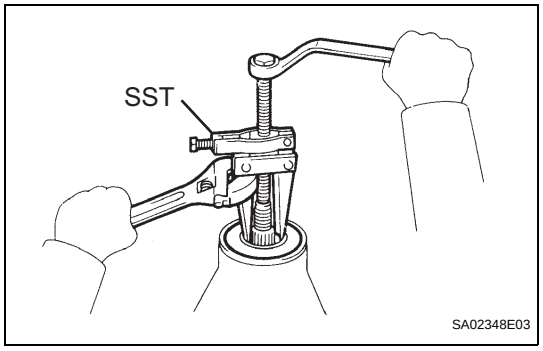

13. REMOVE REAR DIFFERENTIAL CARRIER OIL SEAL

(a) Using SST, remove the oil seal from the differential carrier.
SST 09308-10010

14. REMOVE REAR DIFFERENTIAL DRIVE PINION OIL SLINGER

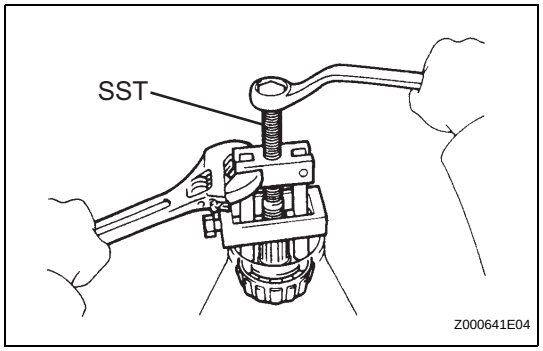

15. REMOVE REAR DRIVE PINION FRONT TAPERED ROLLER BEARING

(a) Using SST, remove the drive pinion tapered roller bearing from the drive pinion.
SST 09556-22010

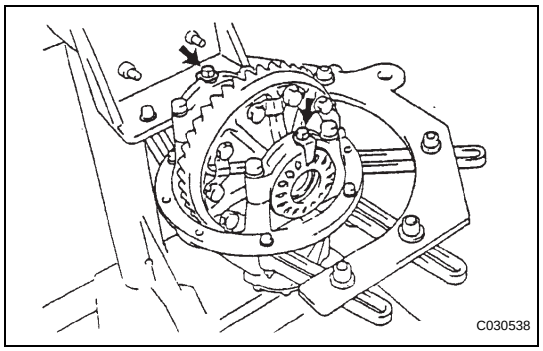

16. REMOVE REAR DIFFERENTIAL BEARING ADJUSTING NUT LOCK

(a) Remove the 2 bolts and 2 rear differential bearing adjusting nut locks.

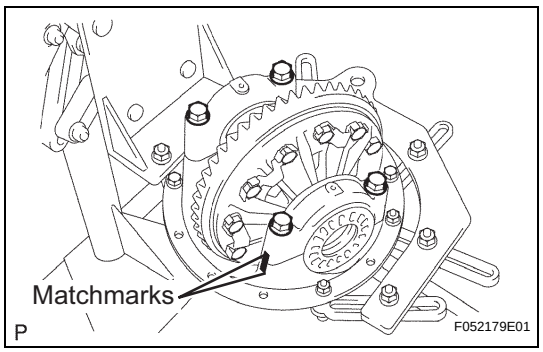

17. REMOVE DIFFERENTIAL CASE ASSEMBLY

(a) Place matchmarks on the bearing cap and differential carrier.
(b) Remove the 4 bolts and 2 differential bearing caps.
(c) Remove the 2 adjusting nuts.

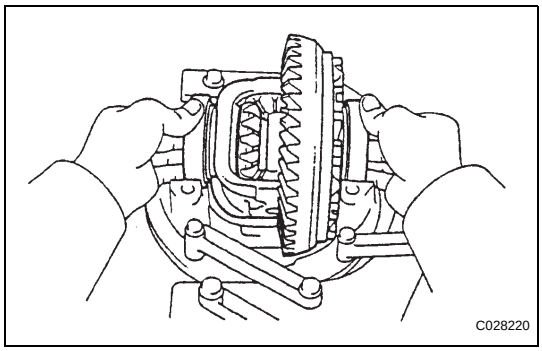

(d) Remove the rear differential case sub-assembly and 2 case bearings from the differential carrier.
HINT:
Tag the 2 case bearings outer races to show the locations for reassembly.

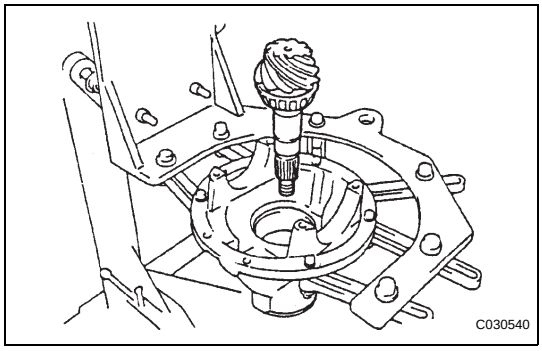

18. REMOVE DIFFERENTIAL DRIVE PINION

(a) Remove the differential drive pinion and bearing spacer from the differential carrier.

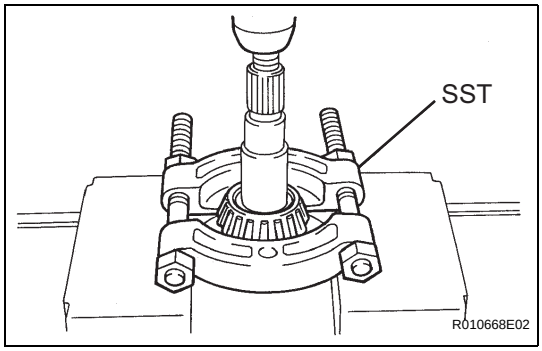

19. REMOVE REAR DRIVE PINION REAR TAPERED ROLLER BEARING

(a) Using SST and a press, remove the drive pinion tapered roller bearing from the drive pinion.
SST 09950-00020
NOTICE:
Do not drop the drive pinion.
HINT:
If either the drive pinion or ring gear is damaged, replace them as a set.

20. REMOVE REAR DIFFERENTIAL DRIVE PINION PLATE WASHER

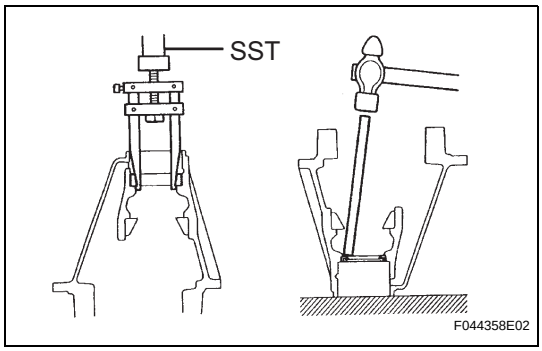

21. REMOVE REAR DRIVE PINION FRONT TAPERED ROLLER BEARING

(a) Using SST, remove the front tapered roller bearing from the carrier.
SST 09308-00010

(b) Using a brass bar and a hammer, remove the oil storage ring from the carrier.
HINT:
If the bearing is damaged during the removal, replace it.

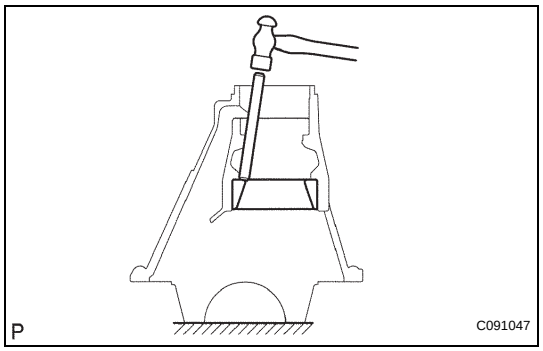

22. REMOVE REAR DRIVE PINION REAR TAPERED ROLLER BEARING

(a) Using a brass bar and a hammer, remove the rear tapered roller bearing from the carrier.
HINT:
If the bearing is damaged during the removal, replace it.

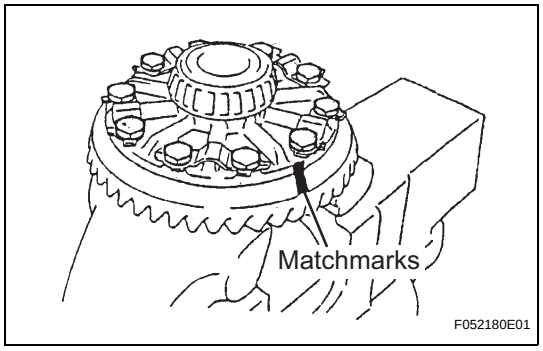

23. REMOVE DIFFERENTIAL RING GEAR

(a) Place matchmarks on the ring gear and differential case.
(b) Using a screwdriver and a hammer, unstake the lock plates.
(c) Remove the 10 ring gear set bolts and 5 lock plates.

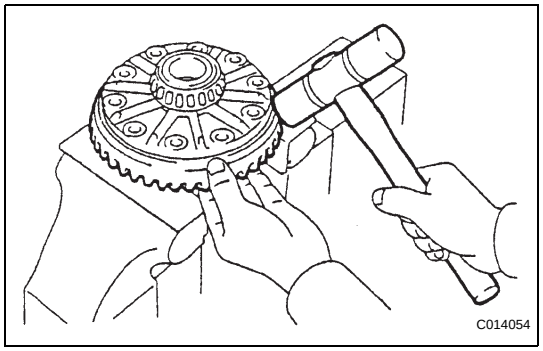

(d) Using a plastic hammer, tap on the ring gear to separate it from the differential case.

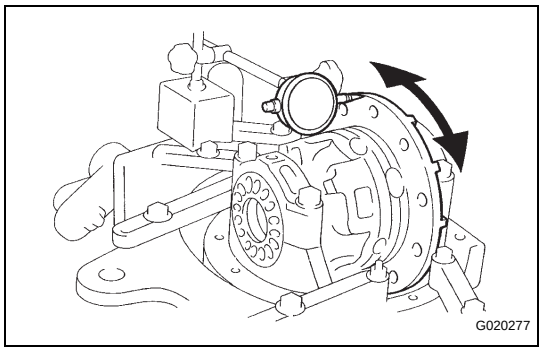

24. INSPECT DIFFERENTIAL CASE ASSEMBLY RUNOUT

(a) Install the rear differential case bearing onto the differential case.
(b) Install the differential case onto the differential carrier.
(c) Install the 2 bearing caps and 4 bolts onto the differential carrier.
Torque: 85 N*m (870 kgf*cm, 63 ft.*lbf)
(d) Inspect the differential case runout.
Maximum runout:
0.07 mm (0.0028 in.)
(e) Remove the differential case.
(f) Remove the rear differential case bearing.

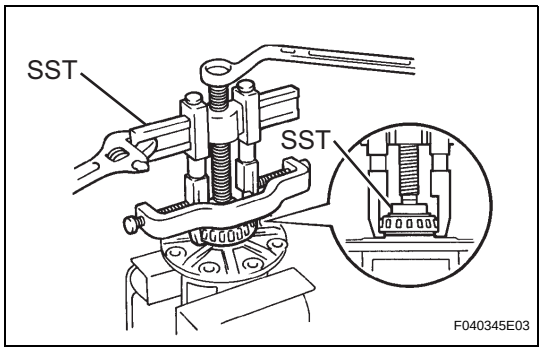

25. REMOVE REAR DIFFERENTIAL CASE BEARING

(a) Using SST, remove the 2 rear differential case bearings from the differential case.

SST 09950-40011 (09951-04020, 09952-04010, 09953-04030, 09954-04010, 09955-04061, 09957-04010, 09958-04011), 09950-60010 (09951-00360)

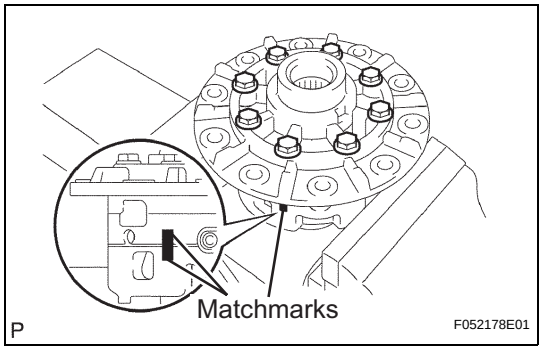

26. DISASSEMBLE DIFFERENTIAL CASE

(a) Place matchmarks on the LH and RH cases.

(b) Remove the 8 bolts.

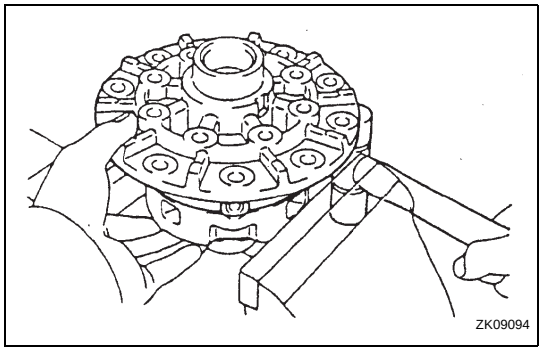

(c) Using a plastic hammer, separate the LH and RH cases.

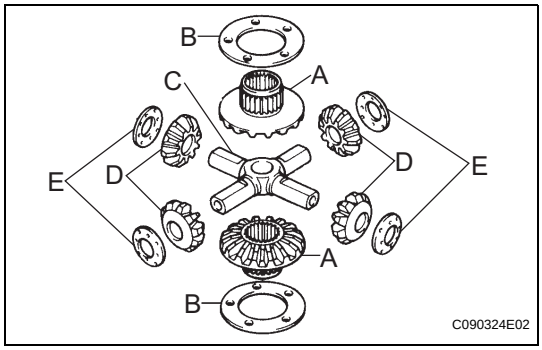

(d) Remove these parts from the differential case.

A	Side gear
B	Side gear thrust washer
C	Spider
D	Pinion gear
E	Pinion gear thrust washer

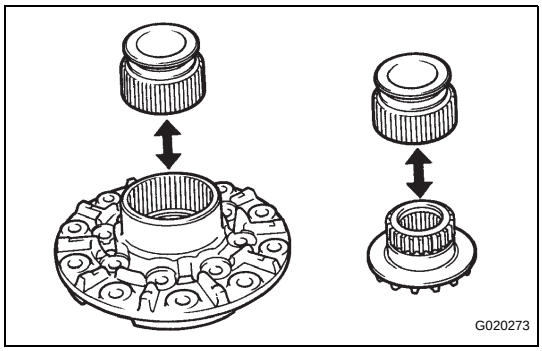

27. INSPECT REAR DIFFERENTIAL LOCK SLEEVE

(a) Install the sleeve onto the differential case (LH) and check that it moves smoothly.

(b) Install the side gear onto the sleeve and check that it moves smoothly.

DF

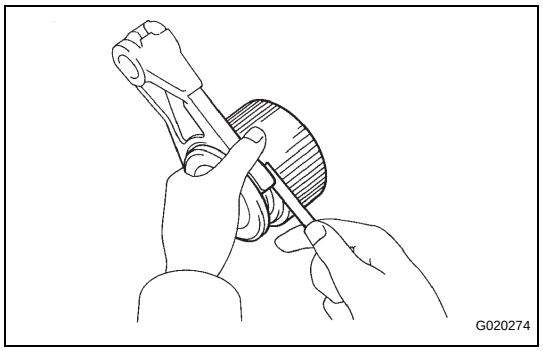

(c) Using a feeler gauge, measure the clearance between the shift fork and sleeve.
Maximum clearance:
0.15 to 0.35 mm (0.0059 to 0.0138 in.)

28. INSPECT DIFFERENTIAL PINION AND SIDE GEAR

(a) Check that there is no damage to the differential pinion and differential side gear.
If the differential pinion and/or differential side gear is damaged, replace the differential.

29. INSPECT DIFFERENTIAL CASE ASSEMBLY

(a) Check that the differential case is not damaged.
If the differential case is damaged, replace the differential case.

INSPECTION

1. INSPECT DIFFERENTIAL PINION AND SIDE GEAR

(a) Check that there is no damage to the differential pinion or differential side gear.
If the differential pinion and/or differential side gear is damaged, replace the differential.

2. INSPECT DIFFERENTIAL CASE

(a) Check that the differential case is not damaged.
If the differential case is damaged, replace it.

REASSEMBLY

1. INSTALL DIFFERENTIAL CASE ASSEMBLY

(a) Install the rear differential side gear thrust washer onto the rear differential side gear.

(b) Install the rear differential pinion thrust washer and rear differential pinion onto the rear differential spider.

(c) Fix the differential case RH.

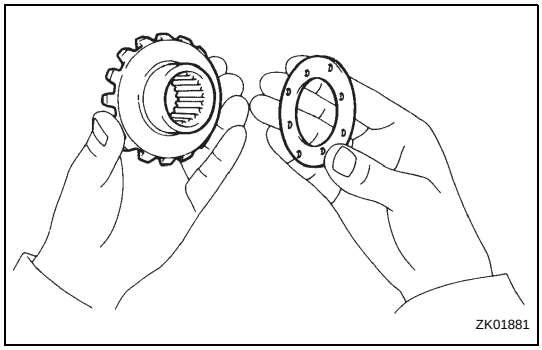

(d) Install the rear differential side gear and rear differential spider onto the differential case RH.

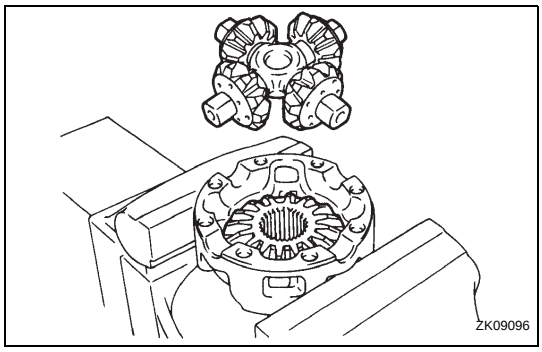

(e) Using a dial indicator, measure the differential case RH side backlash while holding the pinion toward the case.
Backlash:
0.05 to 0.20 mm (0.002 to 0.008 in.)

(f) Remove the rear differential spider from the differential case RH.

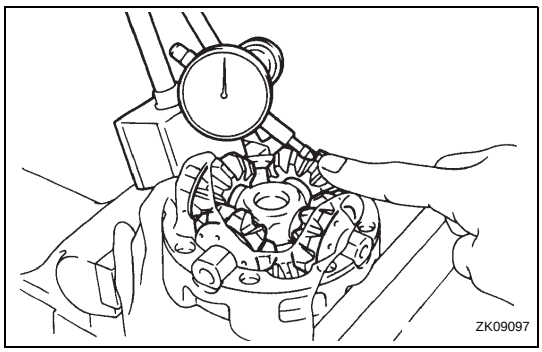

(g) Install the rear differential side gear and rear differential spider onto the differential case LH.

(h) Using a dial indicator, measure the differential case LH side backlash while holding the pinion toward the case.
Backlash:
0.05 to 0.20 mm (0.002 to 0.008 in.)
If the backlash is not within the specification, install 2 side gear thrust washers of a different thickness.

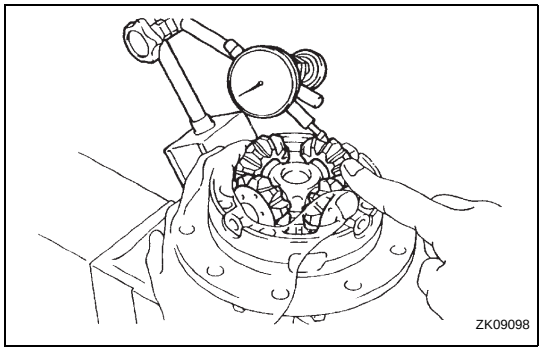

Thrust washer thickness

Thickness mm (in.)	Thickness mm (in.)
0.9 (0.0354)	1.2 (0.0472)
1.0 (0.0394)	1.3 (0.0512)
1.1 (0.0433)	-

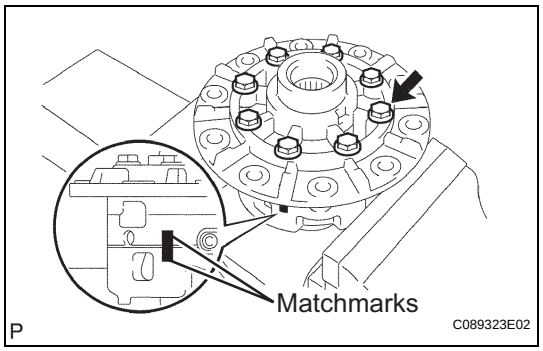

(i) Align the matchmarks and assemble the RH and LH cases.
(j) Using a plastic hammer, install the differential case.
(k) Install the 8 bolts.
Torque: 47 N*m (480 kgf*cm, 35 ft.*lbf)

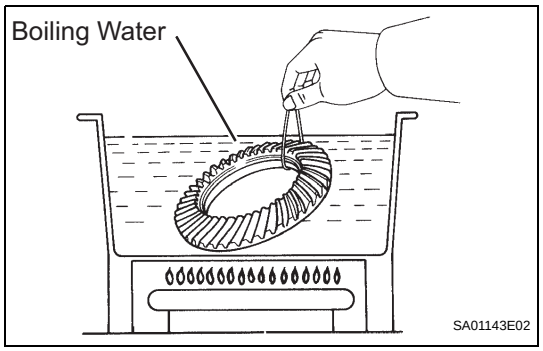

2. INSTALL DIFFERENTIAL RING GEAR

(a) Clean the contact surfaces of the differential case and ring gear.
(b) Heat the ring gear to approximately 100°C (212°F) in boiling water.
(c) Carefully take the ring gear out of the boiling water.
(d) After the moisture on the ring gear has completely evaporated, quickly install the ring gear onto the differential case.

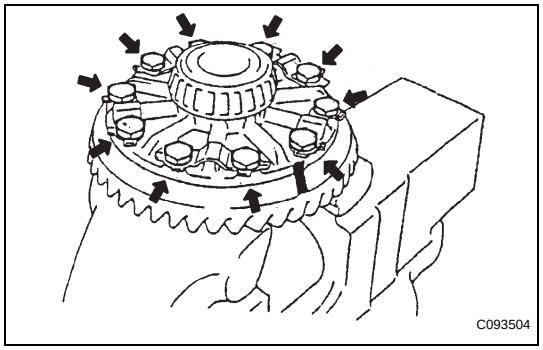

(e) Align the matchmarks on the ring gear and differential case.
(f) Temporarily install 5 new lock plates and 10 bolts.
(g) After the ring gear cools down sufficiently, torque the 10 bolts uniformly.
Torque: 97 N*m (985 kgf*cm, 71 ft.*lbf)
HINT:
Tighten the bolts in diagonal order little by little in several steps.

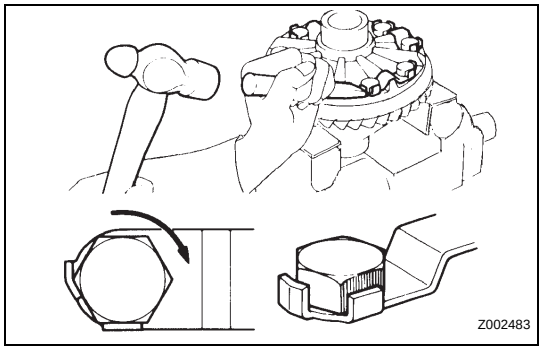

(h) Using a chisel and a hammer, stake the 5 lock plates.
HINT:
Strike the tab labeled A so that it is flush with the flat surface of the bolt. Strike the tab labeled B so that half of the tab is in contact with the bolt as shown in the illustration.

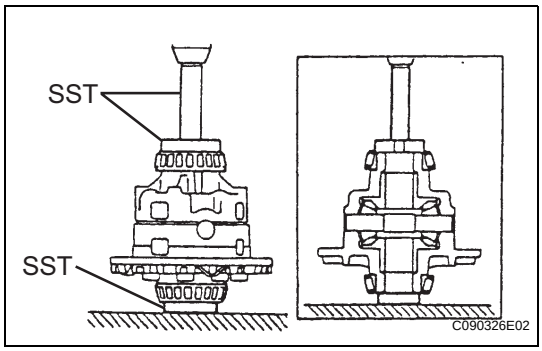

3. INSTALL REAR DIFFERENTIAL CASE BEARING

(a) Using SST and a press, install the bearing onto the differential case.

SST 09950-60010 (09951-00430, 09951-00480, 09951-00470, 09951-00550), 09950-70010 (09951-07150, 09951-00560, 09951-00570)

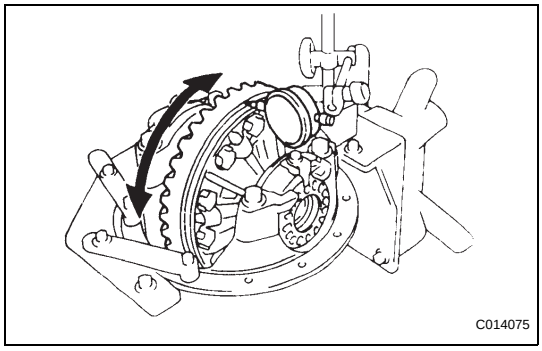

4. INSPECT DIFFERENTIAL RING GEAR RUNOUT

(a) Install the differential case onto the carrier, and install the 2 adjusting nuts so that there is no play in the bearing.

(b) Install the 2 bearing caps with the 4 bolts.

Torque: 85 N*m (870 kgf*cm, 63 ft.*lbf)

(c) Using a dial indicator, measure the runout of the ring gear.

Maximum runout:
0.07 mm (0.0028 in.)

(d) Remove the 2 bearing caps, 2 adjusting nuts and differential case.

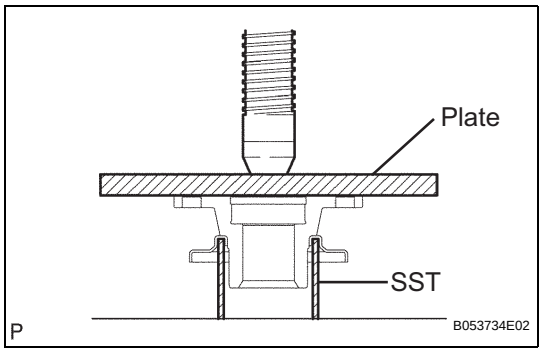

5. INSTALL REAR DIFFERENTIAL DUST DEFLECTOR

(a) Using a press, install a new dust deflector.

NOTICE:
Be careful not to damage the dust deflector.

SST 09636-20010

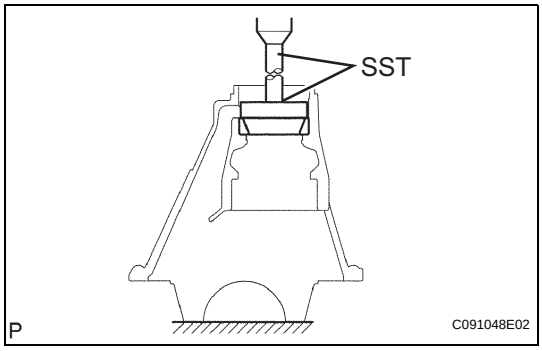

6. INSTALL REAR DRIVE PINION FRONT TAPERED ROLLER BEARING

(a) Using a brass bar and a hammer, install the oil storage ring.

(b) Using SST and a press, install the tapered roller bearing onto the carrier.

SST 09316-60011 (09316-00011, 09316-00021)

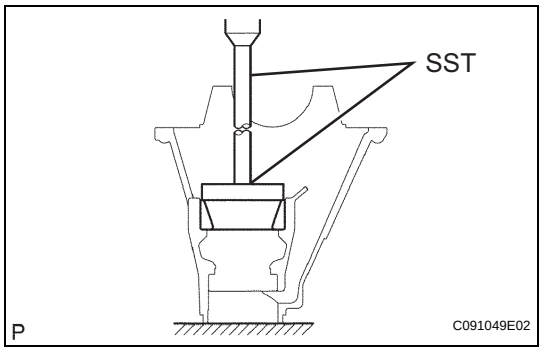

7. INSTALL REAR DRIVE PINION REAR TAPERED ROLLER BEARING

(a) Using SST and a press, install the tapered roller bearing onto the carrier.
SST 09316-60011 (09316-00041, 09316-00011)

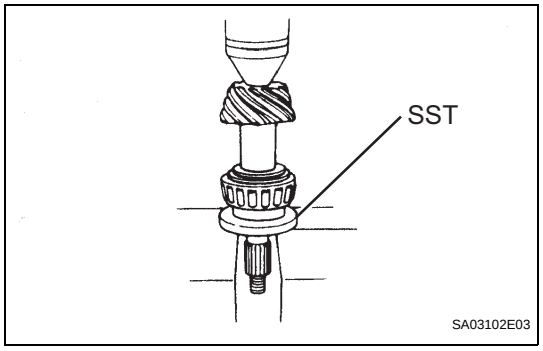

8. INSTALL REAR DRIVE PINION REAR TAPERED ROLLER BEARING

(a) Install the plate washer onto the drive pinion.
(b) Using SST and a press, install the tapered roller bearing onto the drive pinion.
SST 09506-30012

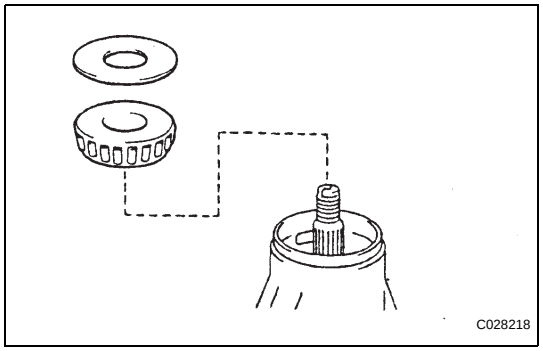

9. ADJUST DIFFERENTIAL DRIVE PINION PRELOAD

(a) Install the drive pinion, rear drive pinion tapered roller bearing and rear differential drive oil slinger.
HINT:
Assemble the spacer and oil seal after adjusting the gear contact pattern.

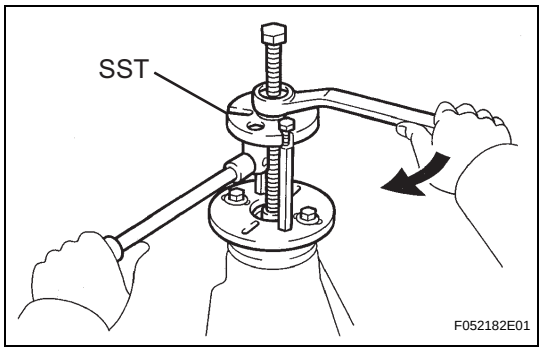

(b) Using SST, install the drive pinion companion flange.
(c) Coat the threads of the nut with hypoid gear oil LSD.
SST 09950-30012 (09951-03010, 09953-03010, 09954-03010, 09955-03030, 09956-03030)

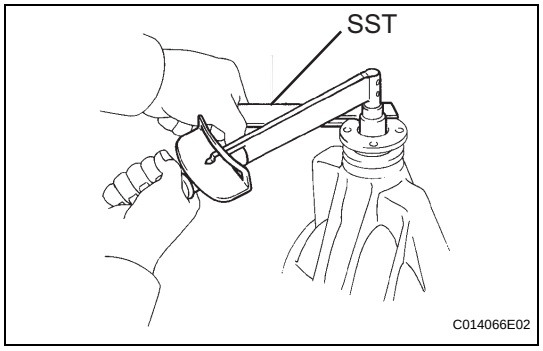

(d) Using SST to hold the drive pinion companion flange, tighten the nut.
Torque: 370 N*m (3,770 kgf*cm, 273 ft.*lbf) or less
SST 09330-00021
NOTICE:
- **As there is no spacer, tighten the nut a little at a time, being careful not to overtighten it.**
- **Apply hypoid gear oil to the nut.**

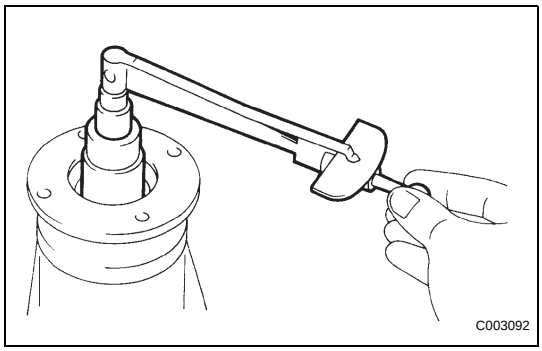

(e) Using a torque wrench, measure the preload.
Preload (at starting)

Bearing	Standard
New	1.05 to 1.64 N*m (10.7 to 16.7 kgf*cm, 9.3 to 14.5 in.*lbf)
Reused	0.56 to 0.85 N*m (5.7 to 8.7 kgf*cm, 4.9 to 7.5 in.*lbf)

NOTICE:
For a more accurate measurement, rotate the bearing forward and backward several times before measuring.

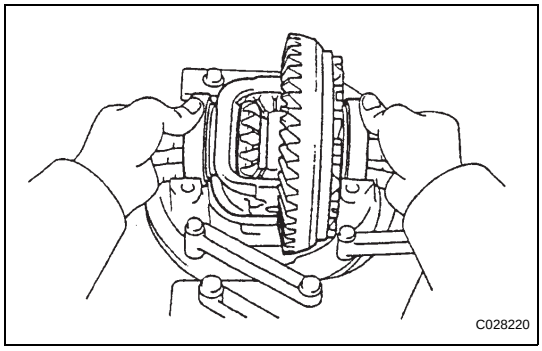

10. INSTALL DIFFERENTIAL CASE ASSEMBLY

(a) Place the 2 bearing outer races on their corresponding bearings.
HINT:
Make sure the right and left races are not interchanged.

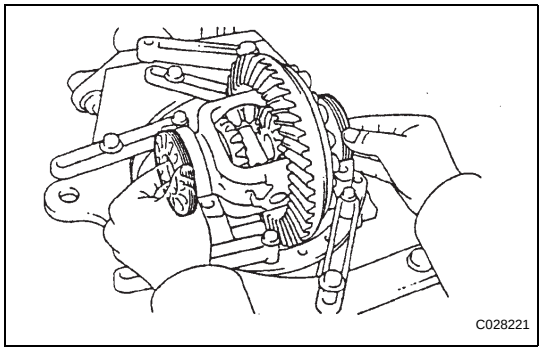

11. INSTALL REAR DIFFERENTIAL BEARING ADJUSTING NUT

(a) Install the 2 adjusting nuts into the carrier, making sure the nuts are threaded properly.

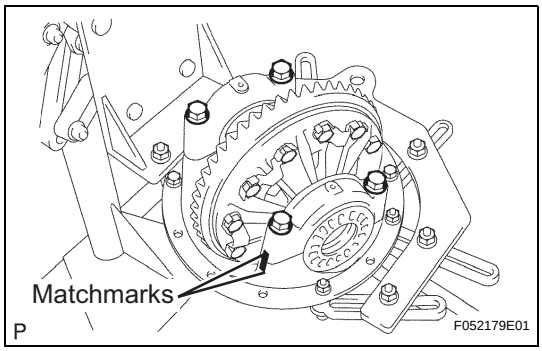

12. INSPECT AND ADJUST DIFFERENTIAL RING GEAR AND DIFFERENTIAL DRIVE PINION BACKLASH

(a) Align the matchmarks on the cap and carrier.
(b) Install the right and left bearing caps with the 4 bolts.
Torque: 85 N*m (870 kgf*cm, 63 ft.*lbf)
HINT:
If the bearing cap does not fit tightly onto the carrier, the adjusting nuts are not threaded properly. Reinstall the adjusting nuts if necessary.

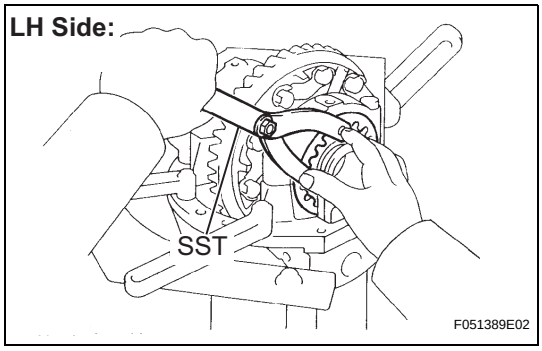

(c) Tighten the 4 bearing cap bolts to the specified torque, then loosen them to the point where the adjusting nuts can be turned by SST.
Torque: 85 N*m (870 kgf*cm, 63 ft.*lbf)
(d) Using the SST, tighten the adjusting nut on the ring gear side until the ring has a backlash of about 0.2 mm (0.008 in.).
SST 09960-10010 (09962-01000, 09963-00700)

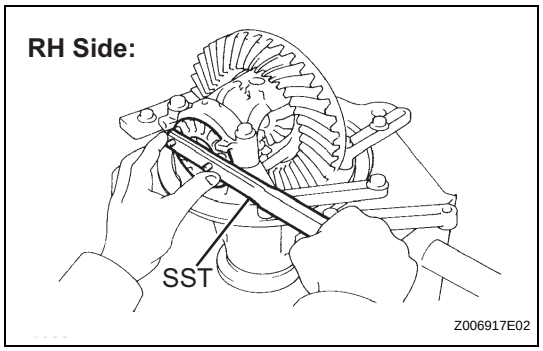

(e) While turning the ring gear, use the SST to fully tighten the adjusting nut on the drive pinion side. After the bearings have settled, loosen the adjusting nut on the drive pinion side.

(f) Using SST, torque the adjusting nut 1 to 1.5 notches from the 0 preload position.
SST 09504-00011

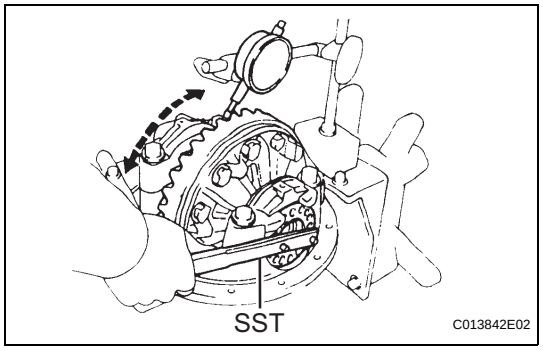

(g) Using a dial indicator, adjust the ring gear backlash until it is within the specification.
Backlash:
0.13 to 0.18 mm (0.0051 to 0.0071 in.)
HINT:
- The backlash is adjusted by turning the left and right adjusting nuts an equal amount. For example, loosen the nut on the right side one notch and loosen the nut on the left side one notch.
- Perform the measurement at 3 or more positions around the circumference of the ring gear.

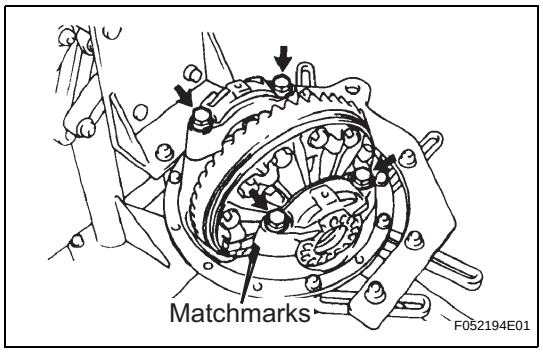

(h) Torque the bearing cap bolts.
Torque: 85 N*m (870 kgf*cm, 63 ft.*lbf)

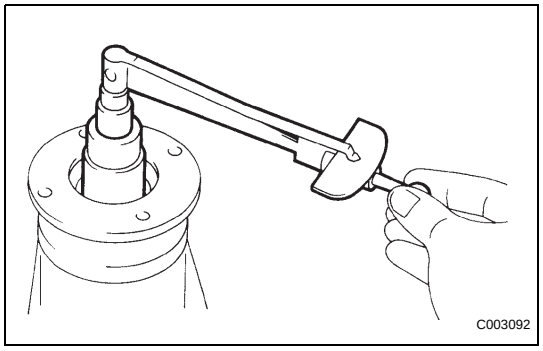

13. INSPECT TOTAL PRELOAD

(a) Using a torque wrench, measure the preload with the teeth of the drive pinion and ring gear in contact.
Total preload (at starting):
Drive pinion preload plus 0.39 to 0.59 N*m (4.0 to 6.0 kgf*cm, 3.5 to 5.2 in.*lbf)
If necessary, disassemble and inspect the differential.

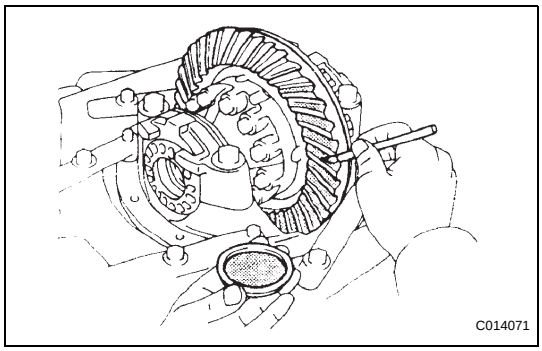

14. INSPECT TOOTH CONTACT BETWEEN RING GEAR AND DRIVE PINION

(a) Coat 3 or 4 teeth at 3 different positions on the ring gear with prussian blue.

(b) Hold the companion flange firmly and rotate the ring gear in both directions.

(c) Inspect the tooth contact pattern.

Driver Side:

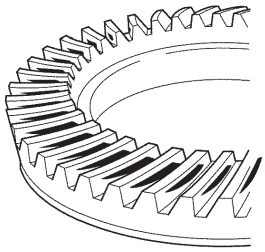

Proper Contact

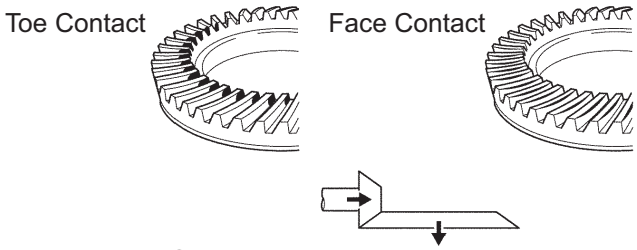

Select an adjusting washer that will bring the drive pinion closer to the ring gear.

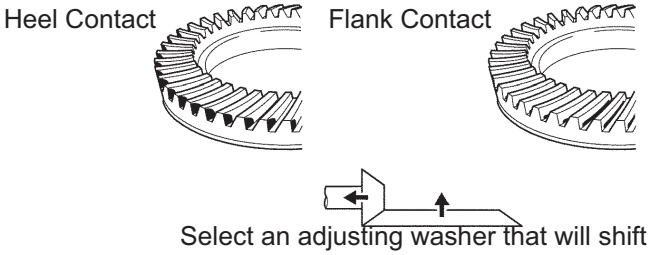

Select an adjusting washer that will shift the drive pinion away from the ring gear.

Coast Side:

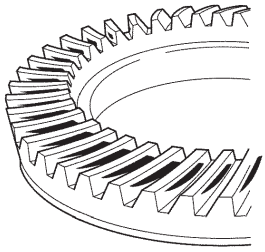

Proper Contact

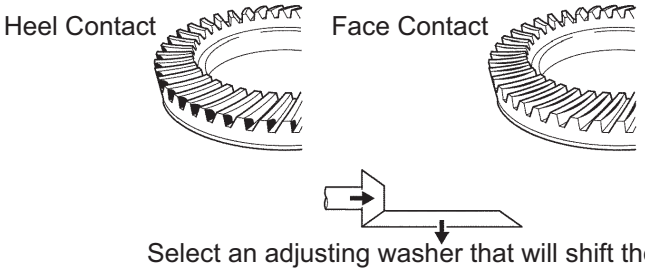

Select an adjusting washer that will shift the drive pinion closer to the ring gear.

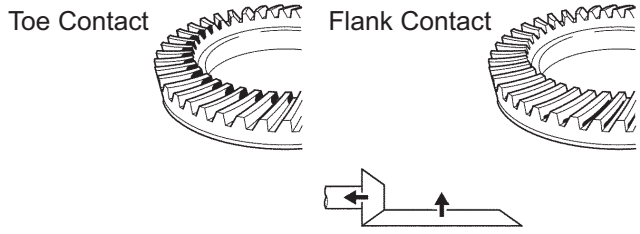

Select an adjusting washer that will bring the drive pinion away from the ring gear.

P

F052199E01

DF

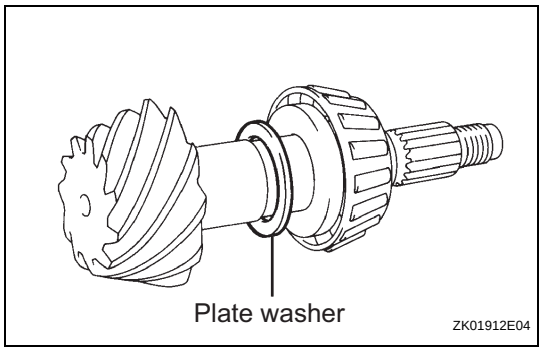

If the teeth are not engaged properly, use the following chart to select an appropriate washer for correction.

Plate Washer Thickness

Thickness mm (in.)	Thickness mm (in.)
1.70 (0.0669)	2.03 (0.0799)
1.73 (0.0681)	2.06 (0.0811)
1.76 (0.0693)	2.09 (0.0823)
1.79 (0.0705)	2.12 (0.0835)
1.82 (0.0717)	2.15 (0.0847)
1.85 (0.0728)	2.18 (0.0853)
1.88 (0.0740)	2.21 (0.0870)
1.91 (0.0752)	2.24 (0.0882)
1.94 (0.0764)	2.27 (0.0894)
1.97 (0.0776)	2.30 (0.0906)
2.00 (0.0787)	2.33 (0.0917)

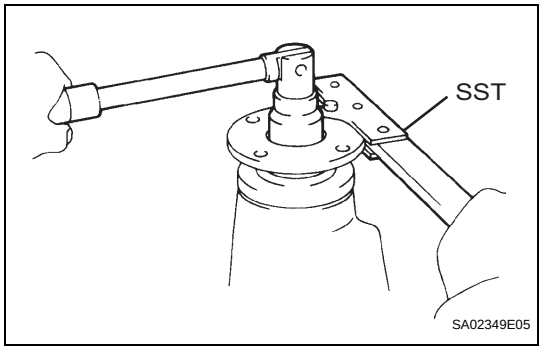

15. REMOVE REAR DRIVE PINION NUT

(a) Using SST to hold the drive pinion companion flange, remove the nut.

SST 09330-00021

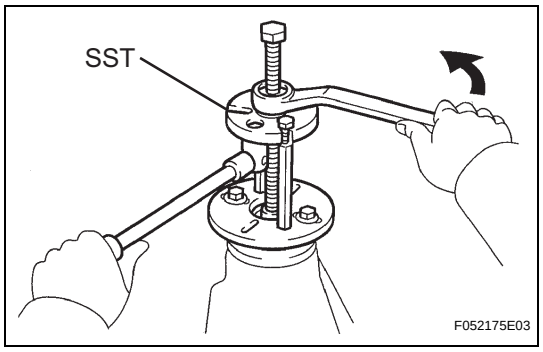

16. REMOVE REAR DRIVE PINION COMPANION FLANGE SUB-ASSEMBLY REAR

(a) Using SST, remove the drive pinion companion flange.

SST 09950-30012 (09951-03010, 09953-03010, 09954-03010, 09955-03030, 09956-03030)

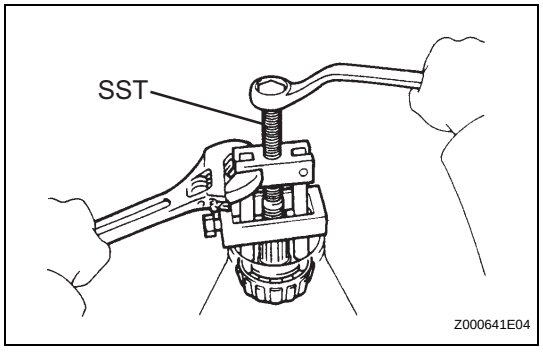

17. REMOVE REAR DRIVE PINION FRONT TAPERED ROLLER BEARING

(a) Using SST, remove the drive pinion tapered roller bearing from the drive pinion.

SST 09556-22010

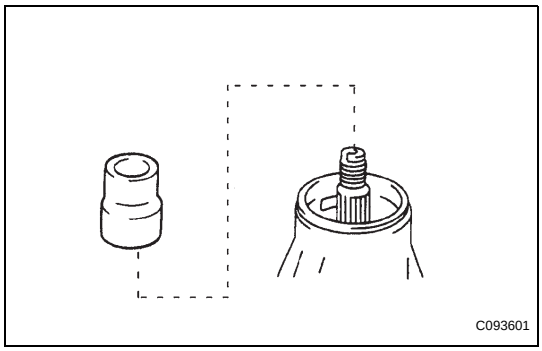

18. INSTALL REAR DIFFERENTIAL DRIVE PINION BEARING SPACER

(a) Install a new bearing spacer onto the drive pinion.

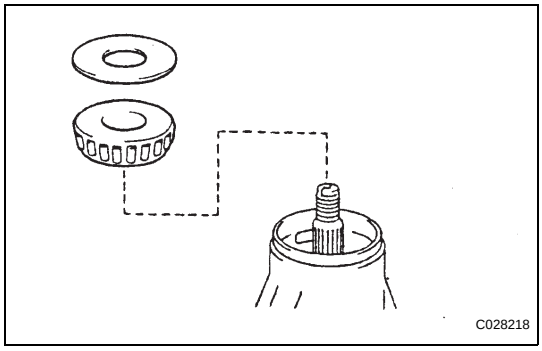

19. INSTALL REAR DRIVE PINION FRONT TAPERED ROLLER BEARING

(a) Install the drive pinion, rear drive pinion taper roller bearing and rear differential drive oil slinger.

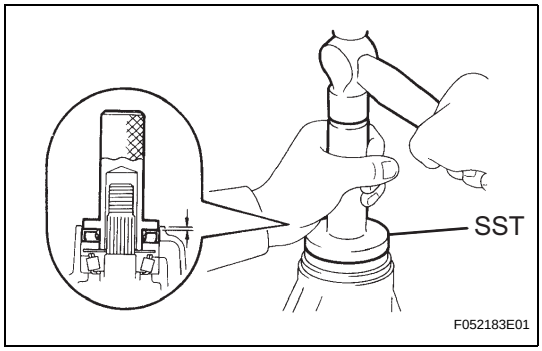

20. INSTALL REAR DIFFERENTIAL CARRIER OIL SEAL

(a) Apply MP grease to the oil seal lip.

(b) Using SST and a hammer, install a new carrier oil seal.

SST 09554-30011

Oil seal drive in depth:

0.55 to 1.45 mm (0.021 to 0.057 in.)

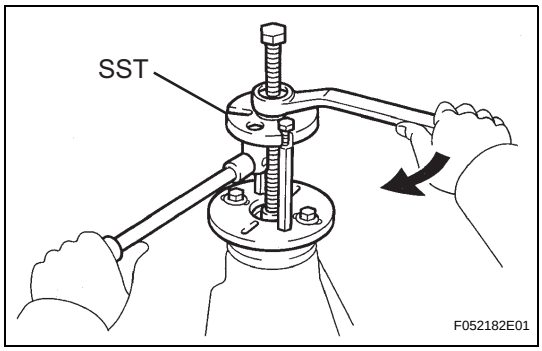

21. INSTALL REAR DRIVE PINION COMPANION FLANGE SUB-ASSEMBLY REAR

(a) Using SST, install the drive pinion companion flange onto the drive pinion.

SST 09950-30012 (09951-03010, 09953-03010, 09954-03010, 09955-03030, 09956-03030)

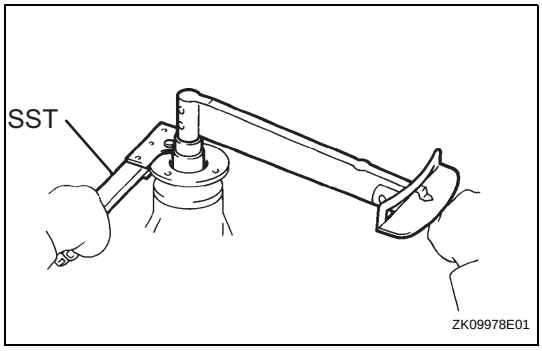

(b) Coat the threads of a new nut with hypoid gear oil LSD.

(c) Using SST to hold the flange, tighten the nut.

SST 09330-00021

Torque: 370 N*m (3,770 kgf*cm, 273 ft.*lbf) or less

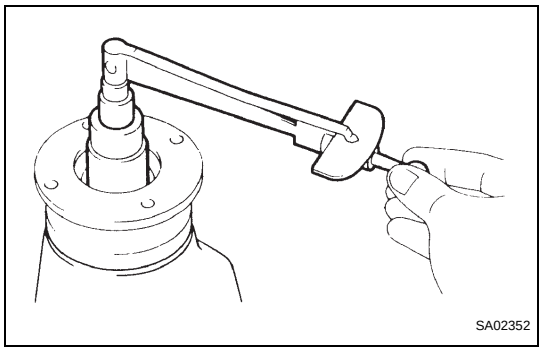

22. INSPECT DRIVE PINION PRELOAD

(a) Using a torque wrench, measure the preload of the backlash between the drive pinion and ring gear.
Preload (at starting)

Bearing	Standard
New	1.05 to 1.64 N*m (10.7 to 16.7 kgf*cm, 9.3 to 14.5 in.*lbf)
Used	0.56 to 0.85 N*m (5.7 to 8.7 kgf*cm, 4.9 to 7.5 in.*lbf)

If the preload is greater than the specification, replace the bearing spacer.
If the preload is less than the specification, retighten the nut to 13 N*m (130 kgf*cm, 9 ft*lbf) of torque at a time until the specified preload is reached.
Torque: 370 N*m (3,770 kgf*cm, 27 ft.*lbf) or less
If the maximum torque is exceeded while retightening the nut, replace the bearing spacer and repeat the preload adjusting procedure.
HINT:
Do not loosen the pinion nut to reduce the preload.

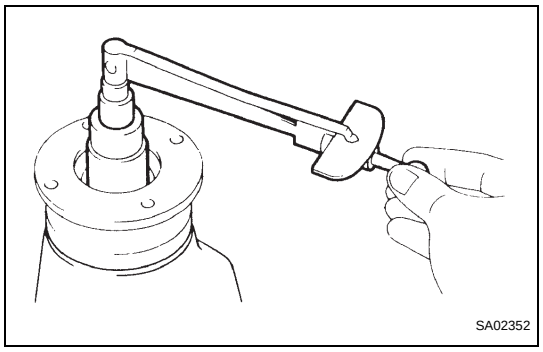

23. INSPECT TOTAL PRELOAD

(a) Using a torque wrench, measure the preload.
Total preload (at starting):
Drive pinion preload plus 0.39 to 0.59 N*m (4.0 to 6.0 kgf*cm, 3.5 to 5.2 in.*lbf)
If necessary, disassemble and inspect the differential.

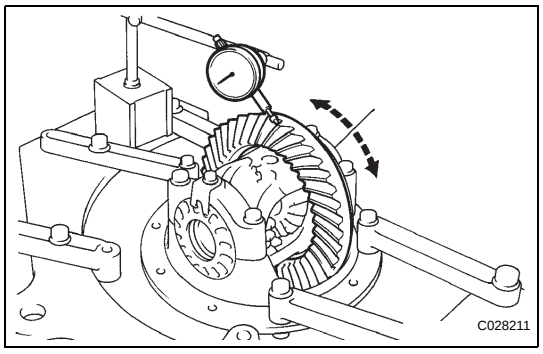

24. INSPECT DIFFERENTIAL RING GEAR BACKLASH

(a) Using a dial indicator, check the backlash of the ring gear.
Backlash:
0.13 to 0.18 mm (0.0051 to 0.0071 in.)
If the backlash is not within the specification, adjust or repair the side bearing preload as necessary.
HINT:
Perform the measurements at 3 or more positions around the circumference of the ring gear.

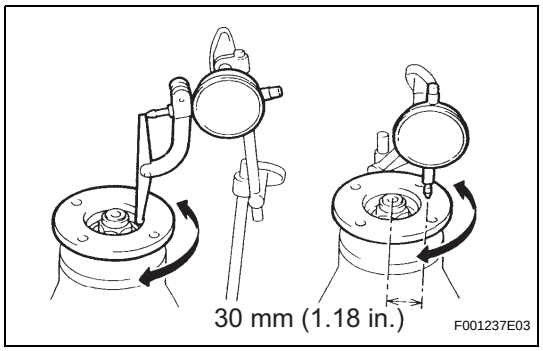

25. INSPECT RUNOUT OF REAR DRIVE PINION COMPANION FLANGE SUB-ASSEMBLY REAR

(a) Using a dial indicator, measure the runout of the drive pinion companion flange vertically and horizontally.
Maximum runout:
Vertical runout: 0.10 mm (0.0039 in.)
Lateral runout: 0.10 mm (0.0039 in.)
If the runouts are not within the specifications, replace the companion flange.

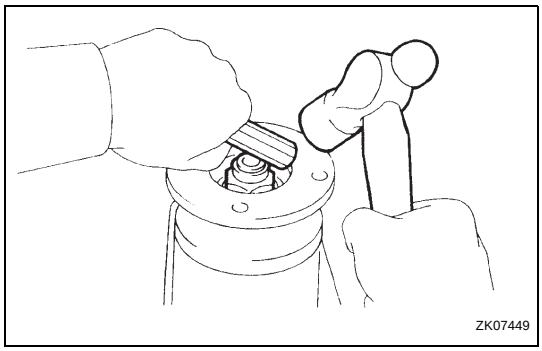

26. INSTALL REAR DRIVE PINION NUT

(a) Using a chisel and hammer, stake the drive pinion nut.

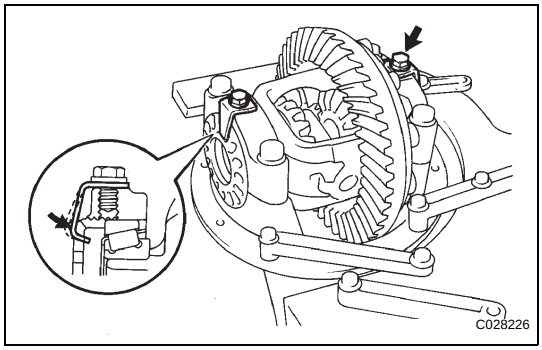

27. INSTALL REAR DIFFERENTIAL BEARING ADJUSTING NUT LOCK

(a) Install 2 new adjusting nut locks onto the bearing caps with the 2 bolts.
Torque: 13 N*m (129 kgf*cm, 9 ft.*lbf)

(b) After tightening the bolts, bend the nut locks.

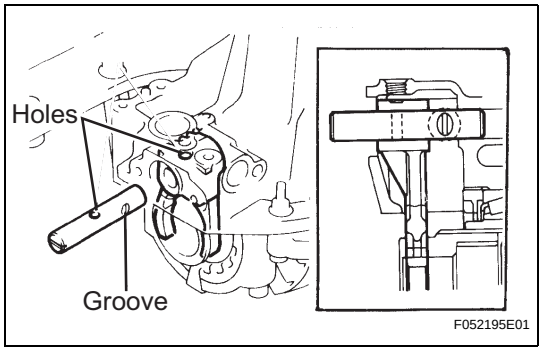

28. INSTALL REAR DIFFERENTIAL LOCK SHIFT FORK

(a) Apply MP grease onto the outer circuit of the shaft.

(b) Install the fork shaft to align the hole of the shift fork with that of the shift fork shaft.

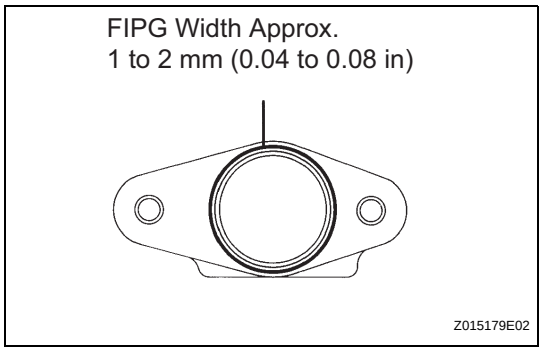

(c) Remove any FIPG material and be careful not to drop the oil shaft retainer.

(d) Apply FIPG to the carrier, as shown in the illustration.
FIPG:
Part No. 08826-00090, THREE BOND 1281 or the equivalent
HINT:
Install the shaft retainer within 10 minutes of applying FIPG.

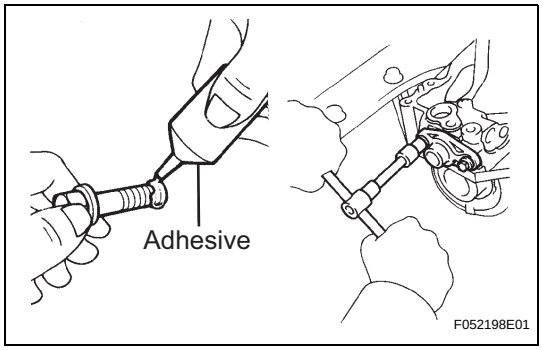

(e) Clean the threads of the bolts and retainer bolts holes with toluene or trichorethyene.

(f) Apply adhesive to 2 or 3 threads of each mount bolt end.
Adhesive:
Part No. 08833-00080, THREE BOND 1344, LOCTITE: 242 or the equivalent

(g) Tighten the shaft retainer with the 2 bolts.
Torque: 24 N*m (240 kgf*cm, 17 ft.*lbf)

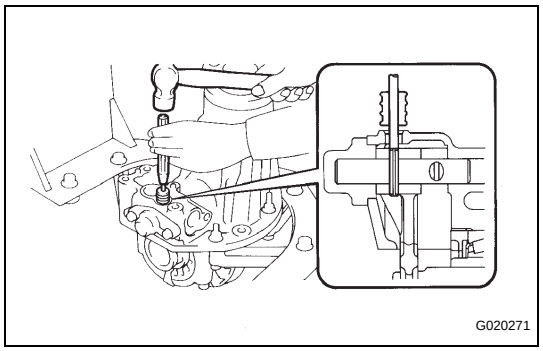

(h) Using a 5 mm pin punch and hammer, install the slotted spring pin into the shift fork.
Torque: 22 N*m (220 kgf*cm, 16 ft.*lbf)

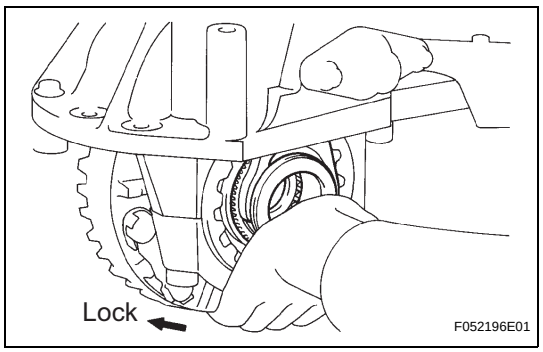

(i) Push the differential lock sleeve in deeply and hold it in position.

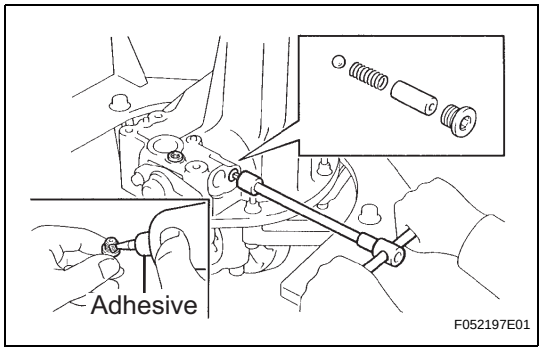

(j) Install the ball, spring and spring seat.
(k) Clean the threads of 2 plugs and plug holes with toluene or trichlorethylene.
Adhesive:
Part No. 08833-00080, THREE BOND 1344, LOCTITE: 242 or the equivalent
(l) Using a 6 mm hexagon wrench, install and tighten the screw plugs.
Torque: 22 N*m (220 kgf*cm, 16 ft.*lbf)

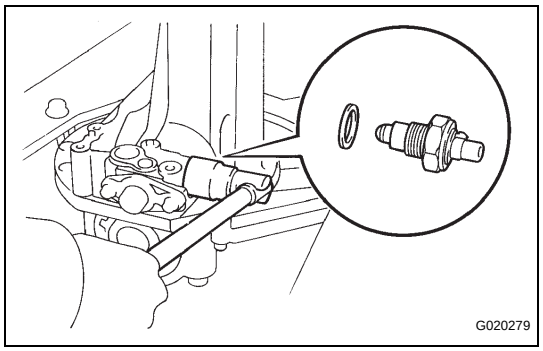

29. INSTALL NO.1 TRANSFER INDICATOR SWITCH
(a) Install the indicator switch with a new gasket.
Torque: 40 N*m (410 kgf*cm, 30 ft.*lbf)

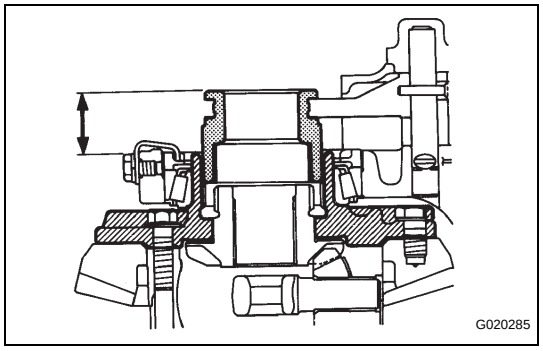

30. INSPECT REAR DIFFERENTIAL LOCK SLEEVE
(a) Measure the distances between the sleeve and tip of the differential case when the differential is free and locked, respectively.
Standard distance:
LOCKED: 17.44 to 18.86 mm (0.6866 to 0.7425 in.)
FREE: 32.40 to 33.90 mm (1.2756 to 1.3346 in.)

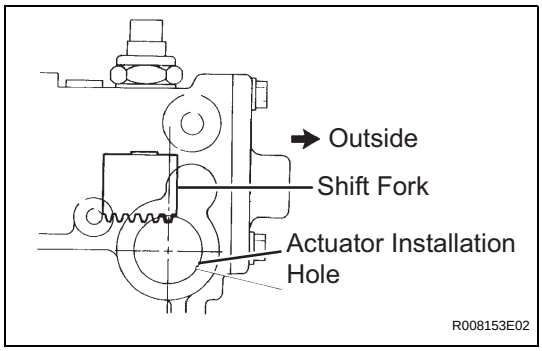

31. INSTALL DIFFERENTIAL LOCK SHIFT ACTUATOR

(a) Check that the outermost rack tooth of the shift fork is approximately above the center line of the actuator installation hole.

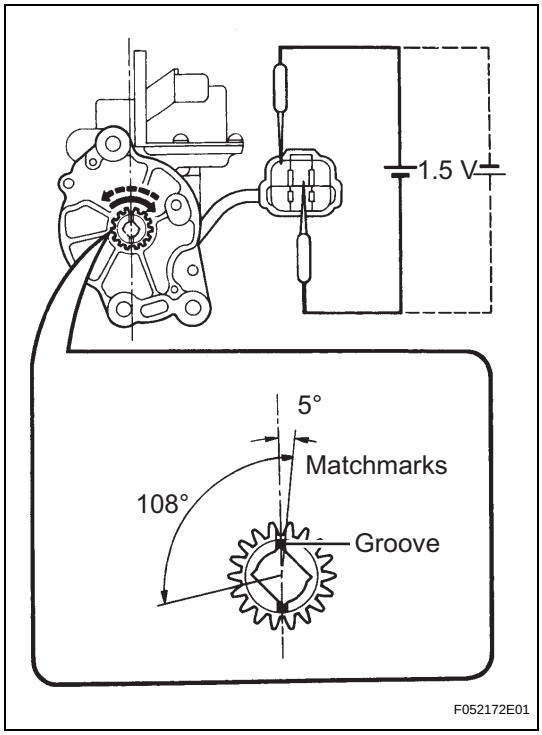

(b) Ensure that the matchmarks on the pinion of the actuator are in the range between 0 and 5 degrees clockwise above the center line of the actuator.
NOTICE:
- **If the matchmarks are not within this range, rotate the pinion.**
- **Do not supply the battery positive voltage directly the between the terminals.**
- **If the matchmarks come to the limit of rotation, do not apply the electric current.**

(c) Install a new O-ring onto the actuator.
(d) Apply a light coat of gear oil to the O-ring.
(e) Apply MP grease to the gear part.

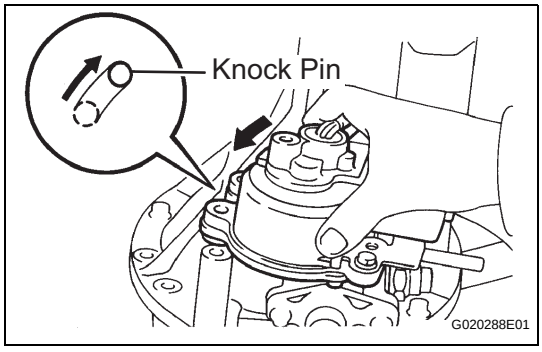

(f) Ensure that the outermost rack tooth of the shift fork fits the matchmarks on the pinion of the actuator.
(g) Install the actuator so that the long hole on the actuator side fits into the knock pin on the carrier side.
HINT:
Do not damage the O-ring of the actuator.
(h) Align the actuator with the long hole and rotate the actuator counterclockwise when the knock pin is set in the left-hand side.
(i) Install and tighten the bolts.
Torque: 27 N*m (270 kgf*cm, 20 ft.*lbf)

INSTALLATION

1. INSTALL REAR DIFFERENTIAL CARRIER ASSEMBLY

(a) Remove any dust and oil from the differential carrier assembly and the contact surfaces of the axle housing.

(b) Apply liquid gasket to both sides of a new gasket.
NOTICE:
Do not apply the liquid gasket to the stud bolt.

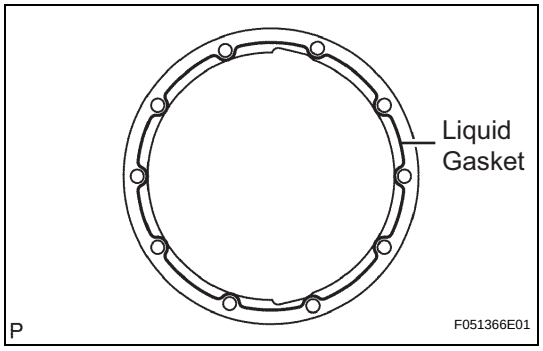

(c) Install a new gasket and the differential carrier assembly with the 11 nuts and 11 washers.
Torque: 25 N*m (255 kgf*cm, 18 ft.*lbf)

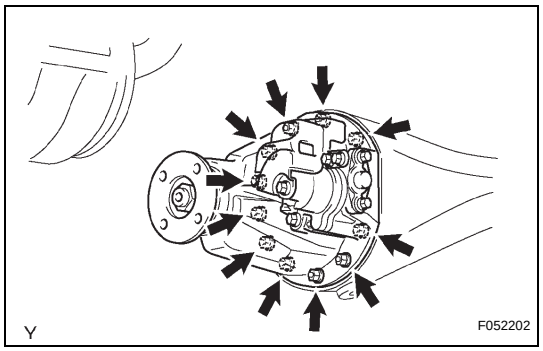

(d) Connect the differential lock actuator connector.

(e) Connect the rear differential lock actuator breather hose to the differential actuator assembly.

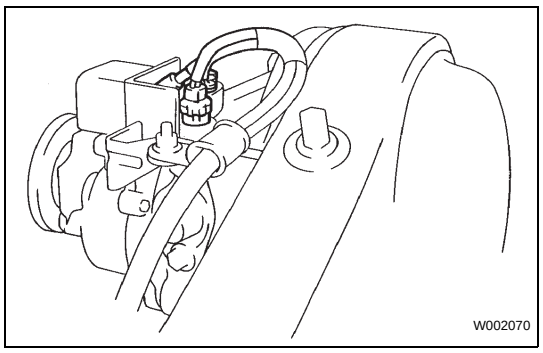

2. INSTALL REAR AXLE SHAFT LH OIL SEAL (See page AH-22)

3. INSTALL REAR AXLE SHAFT RH OIL SEAL
HINT:
Use the same procedure as for the LH side.

4. INSTALL REAR AXLE SHAFT LH (See page AH-22)

5. INSTALL REAR AXLE SHAFT RH
HINT:
Use the same procedure as for the LH side.

6. INSPECT REAR AXLE SHAFT BEARING (See page AH-2)

7. INSTALL REAR SPEED SENSOR LH (See page BC-198)

8. INSTALL REAR SPEED SENSOR RH
HINT:
Use the same procedure as for the LH side.

9. INSTALL PARKING BRAKE CABLE LH (See page AH-23)

10. **INSTALL PARKING BRAKE CABLE RH**
    HINT:
    Use the same procedure as for the LH side.
11. **APPLY HIGH TEMPERATURE GREASE (See page PB-19)**
12. **INSTALL PARKING BRAKE SHOE (See page PB-19)**
13. **INSTALL PARKING BRAKE SHOE STRUT (See page PB-19)**
14. **INSTALL PARKING BRAKE SHOE RETURN TENSION SPRING (See page PB-19)**
15. **CHECK PARKING BRAKE INSTALLATION (See page PB-20)**
16. **INSTALL REAR DISC (See page PB-20)**
17. **ADJUST PARKING BRAKE SHOE CLEARANCE (See page PB-20)**
18. **INSTALL REAR DISC BRAKE CALIPER ASSEMBLY LH (See page AH-23)**
19. **INSTALL REAR DISC BRAKE CALIPER ASSEMBLY RH**
    HINT:
    Use the same procedure as for the LH side.
20. **INSTALL PROPELLER SHAFT ASSEMBLY (for 2WD) (See page PR-14)**
21. **INSTALL PROPELLER SHAFT ASSEMBLY (for 4WD) (See page PR-14)**
22. **INSTALL REAR WHEEL**
    Torque: 112 N*m (1,137 kgf*cm, 82 ft.*lbf)
23. **CONNECT CABLE TO NEGATIVE BATTERY TERMINAL**
    Torque: 3.9 N*m (40 kgf*cm, 35 in.*lbf)
24. **INSPECT DIFFERENTIAL OIL (See page DF-3)**
25. **CHECK FOR DIFFERENTIAL OIL LEAKAGE**
26. **FILL RESERVOIR WITH BRAKE FLUID (See page BR-5)**
27. **BLEED BRAKE LINE (See page BR-5)**
28. **CHECK FLUID LEVEL IN RESERVOIR (See page BR-7)**
29. **CHECK FOR BRAKE FLUID LEAKAGE**
30. **INSPECT PARKING BRAKE LEVER TRAVEL (See page PB-4)**
31. **ADJUST PARKING BRAKE LEVER TRAVEL (See page PB-4)**
32. **CHECK VSC SENSOR SIGNAL**
    (See page BC-28)

DIFFERENTIAL VACUUM ACTUATOR

PARTS LOCATION

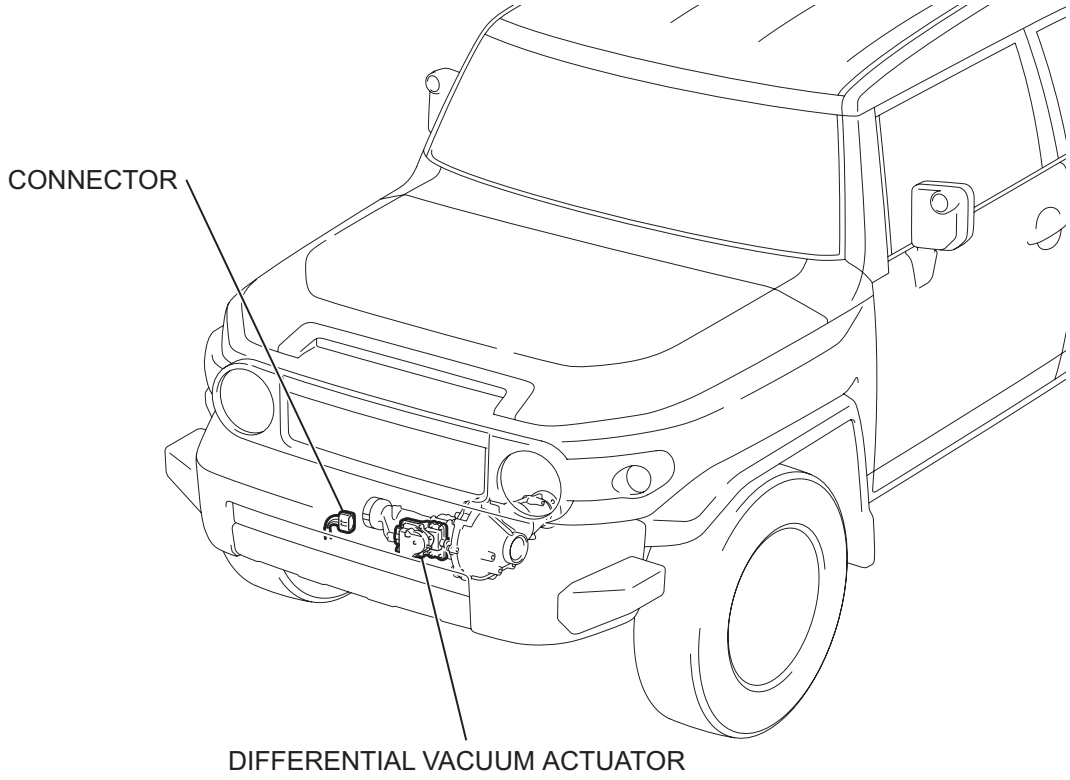

P

C135456E01

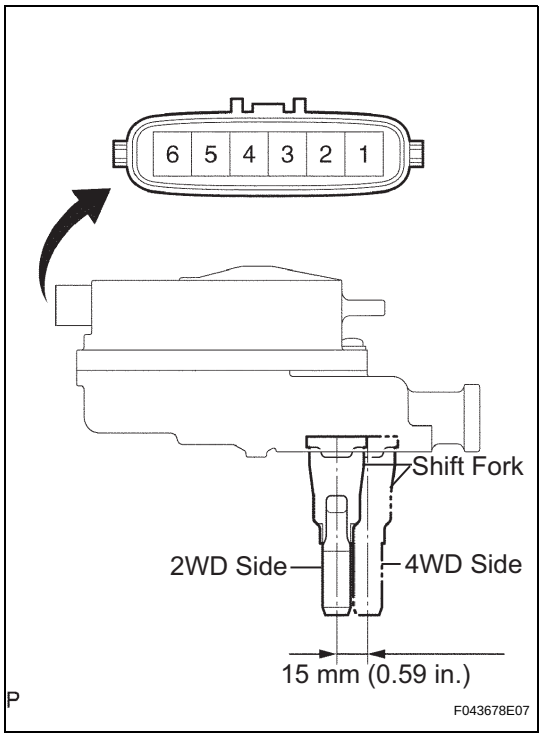

INSPECTION

1. INSPECT DIFFERENTIAL VACUUM ACTUATOR ASSEMBLY

(a) Measure the resistance between terminals 1 and 2.
Standard resistance:
0.1 to 100 Ω

(b) Measure the resistance between terminal 1 or 2 and body ground.
Standard resistance:
5 MΩ or more
If the result is not as specified, replace the differential vacuum actuator.

(c) Check the actuator using one of the following methods.

(1) Measure the resistance of the actuator.

Standard resistance

Tester Connection	Measurement Condition	Specified Condition
3 to 4	Battery positive (+) → Terminal 1 Battery negative (-) → Terminal 2	Below 1 Ω
3 to 4	Battery positive (+) → Terminal 2 Battery negative (-) → Terminal 1	10 kΩ or more
4 to 5	Battery positive (+) → Terminal 1 Battery negative (-) → Terminal 2	Below 1 Ω
4 to 5	Battery positive (+) → Terminal 2 Battery negative (-) → Terminal 1	10 kΩ or more
4 to 6	Battery positive (+) → Terminal 1 Battery negative (-) → Terminal 2	Below 1 Ω
4 to 6	Battery positive (+) → Terminal 2 Battery negative (-) → Terminal 1	10 kΩ or more

If the result is not as specified, replace the actuator.

(2) Check the actuator status.
Actuator operation

Measurement Condition	Specified Condition
Battery positive (+) → Terminal 1 Battery negative (-) → Terminal 2	2WD → 4WD
Battery positive (+) → Terminal 2 Battery negative (-) → Terminal 1	4WD → 2WD

If the result is not as specified, replace the actuator.

REPLACEMENT

1. **REMOVE FRONT SIDE MEMBER TO FRONT SUSPENSION CROSSMEMBER BRACE**
2. **REMOVE NO. 1 ENGINE UNDER COVER**
3. **REMOVE REAR ENGINE UNDER COVER ASSEMBLY**
4. **DRAIN DIFFERENTIAL OIL**
5. **REMOVE DIFFERENTIAL VACUUM ACTUATOR ASSEMBLY**
   (a) Remove the bolt and disconnect the differential breather tube bracket.
   (b) Support the differential with a jack.
   (c) Remove differential mounting nut No. 1.
   (d) Remove the 2 mounting bolts and 2 nuts.
   (e) Disconnect the actuator hose and connector.
   (f) Lower the jack.

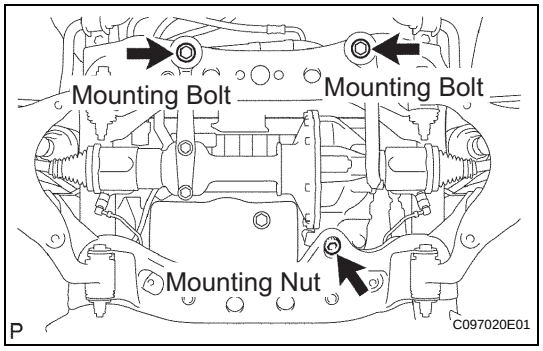

   (g) Remove the 4 bolts and vacuum actuator.

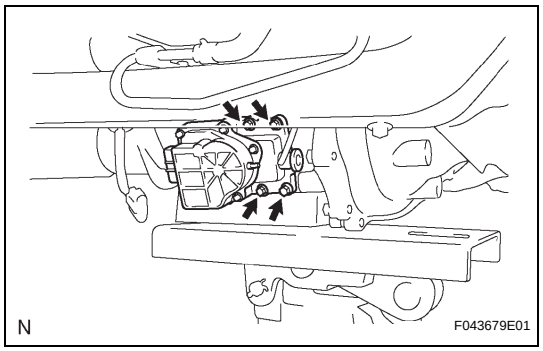

6. **INSTALL DIFFERENTIAL VACUUM ACTUATOR ASSEMBLY**
   (a) Remove any old FIPG material.
   NOTICE:
   Be careful not to drop oil on the contact surfaces of the actuator and clutch case.
   (b) Using gasoline or alcohol, clean any residual FIPG material on the contact surfaces.
   (c) Apply FIPG to the differential tube, as shown in the illustration.
   FIPG:
   Part No. 08826-00090, THREE BOND 1281 or the equivalent
   HINT:
   Install the actuator within 10 minutes of applying FIPG.

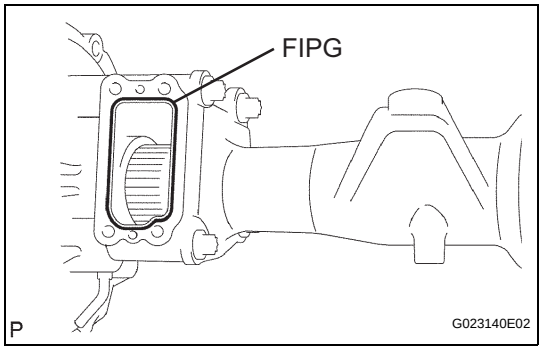

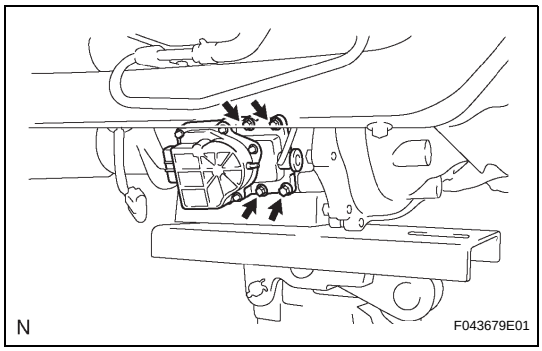

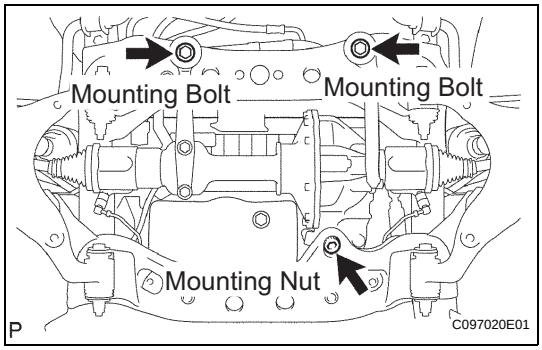

(d) Clean the threads of the 4 bolts and retainer bolt holes with toluene or trichloroethylene.
(e) Apply adhesive to 2 or 3 threads at the tip of the bolt.
Adhesive:
Part No. 0883-00070, THREE BOND 1281 or the equivalent
(f) Install the differential vacuum actuator onto the differential tube with the 4 bolts.
Torque: 21 N*m (210 kgf*cm, 15 ft.*lbf)

(g) Connect the actuator hose and connector.
(h) Support the differential with a jack.
(i) Install the 2 front mounting bolts and 2 nuts.
Torque: 137 N*m (1,400 kgf*cm, 101 ft.*lbf)
(j) Install differential mounting nut No. 1.
Torque: 87 N*m (887 kgf*cm, 64 ft.*lbf)
(k) Install the differential breather tube bracket with the bolt.
Torque: 13 N*m (133 kgf*cm, 10 ft.*lbf)

7. REFILL DIFFERENTIAL OIL
(a) Refill differential oil (see page DF-3).

8. CHECK FOR DIFFERENTIAL OIL LEAKAGE

9. INSTALL REAR ENGINE UNDER COVER ASSEMBLY

10. INSTALL NO. 1 ENGINE UNDER COVER

11. INSTALL FRONT SIDE MEMBER TO FRONT SUSPENSION CROSSMEMBER BRACE

DIFFERENTIAL LOCK SYSTEM

PARTS LOCATION

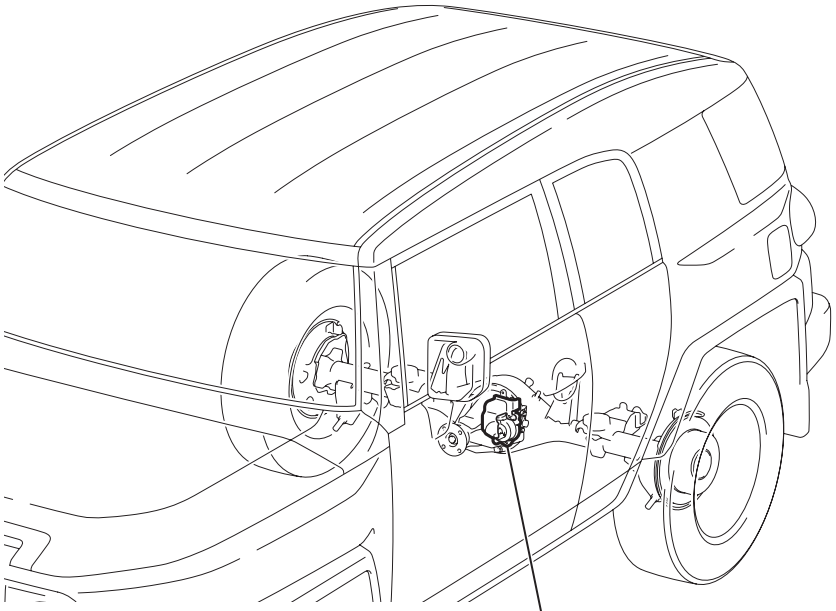

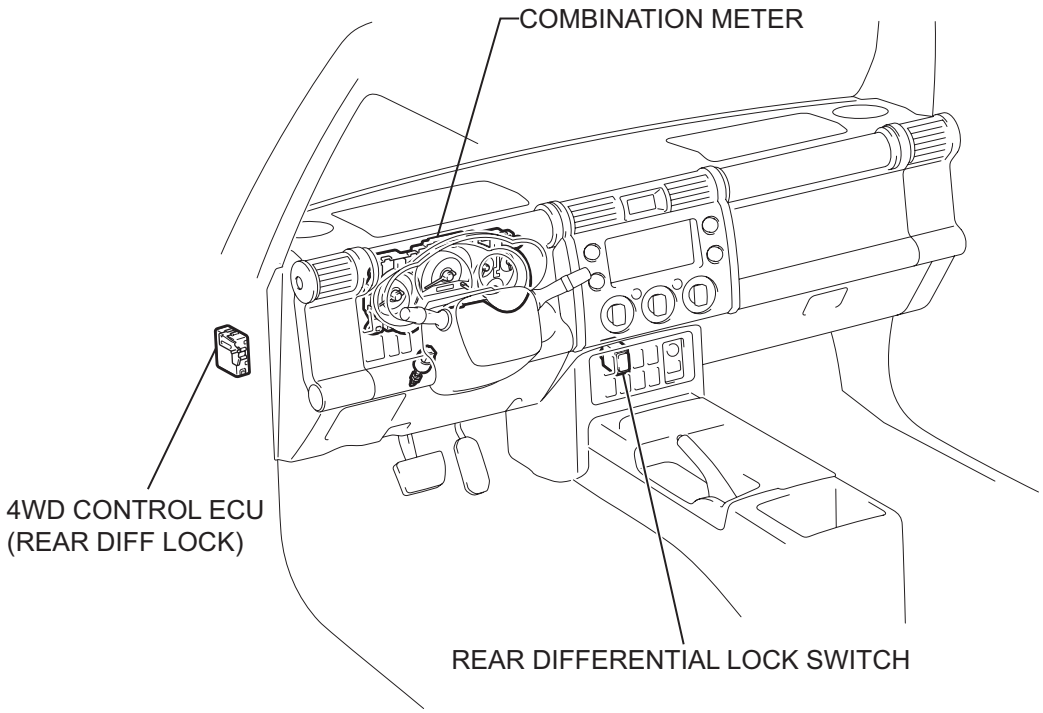

P

C135457E01

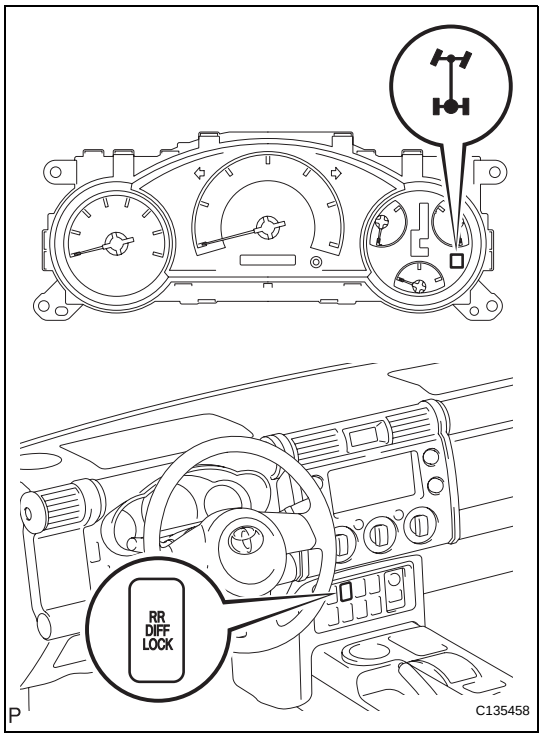

INSPECTION

1. INSPECT DIFFERENTIAL LOCK SYSTEM

(a) Inspect the indicator light.
  (1) Check that the indicator light lights up for approximately 1 second when the ignition switch is turned ON.

(b) Inspect the differential lock operation.
  (1) Jack up the vehicle then start the engine.
  (2) Shift the transfer shift lever to L position.
  (3) When the differential lock control switch is set to the ON position, the indicator light is pushed on. Differential lock is applied to the rear wheel at this time.
  HINT:
  If the gears of the differential lock system are not engaged, the indicator light remains blinking, so rotate the tires to engage the gear.
  (4) When the differential lock control switch is in the OFF position, the indicator light goes off. The rear differential lock is released at this time.

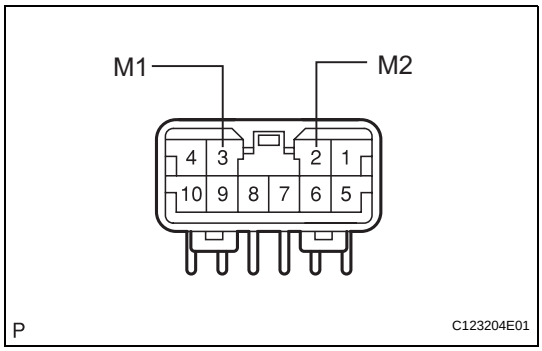

  (5) Check the voltage between the terminals of the four wheel drive control ECU when switching the differential control ON, with the speedometer registering approximately 5 mph (8 km/h) or more.
  Standard voltage

Switch position	Terminal	Specified value
ON	M1 - M2	0.5 V or less (No change)

  (6) Return the differential lock control switch to OFF.
  (7) Stop the engine and lower the vehicle.

2. CHECK WIRE HARNESS AND CONNECTOR

(a) Inspect the system circuit with the connector disconnected.
  (1) Disconnect the connector from the four wheel drive control ECU and inspect the connector on the wire harness side, as shown in the table.
  Standard

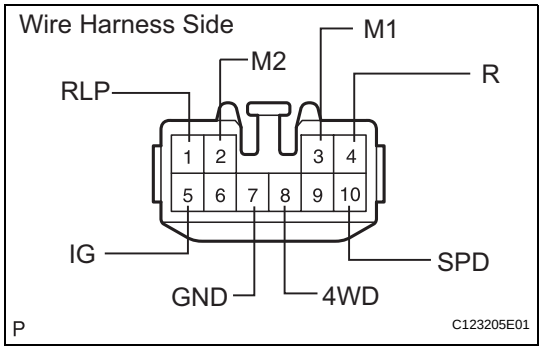

Tester Connection	Trouble Part	Condition	Specified value
M1 - M2	Rear differential lock actuator	-	Less than 100 Ω
GND - Body ground	Body ground	-	Continuity
SPD - Body ground	Speed sensor	Vehicle moves slowly	1 pulse 40 cm (15.75 in.)
IG - Body ground	Differential fuse	Ignition switch ON	11 to 14 V

Tester Connection	Trouble Part	Condition	Specified value
RLP - Body ground	Rear differential lock indicator switch	Ignition switch ON with indicator light ON	Approx. 0 V
		Ignition switch ON with indicator light OFF	11 to 14 V
4WD - Body ground (4WD)	L position switch	Ignition switch ON with transfer shift lever except L	Approx. 0 V
		Ignition switch ON with transfer shift lever L	11 to 14 V
R - Body ground	Differential lock control switch	Ignition switch ON with differential lock control switch ON	11 to 14 V
		Ignition switch ON with differential lock control switch OFF	Approx. 0 V

HINT:
If the circuit is not as specified, check and repair or replace the trouble part shown in the table above.

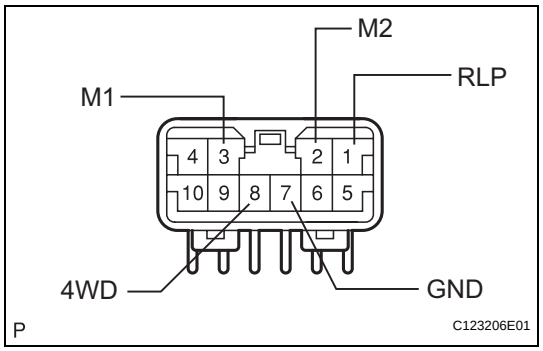

3. CHECK FOUR WHEEL DRIVE CONTROL ECU

(a) Inspect the system circuit with the connector connected.
  (1) Turn the ignition switch to the ON position.
  (2) Shift the transfer shift lever to the L position.
  (3) Using a voltmeter, measure the voltage when the differential lock control switch is in the position, as shown in the table.

Standard voltage

Tester connection	Switch position	Specified value
4WD - GND	-	0.5 V or less
RLP - GND	ON*	0.5 V or less
M1 - M2	OFF → ON	0.5 V or less → 11 to 14 V (approx. 1 sec.) → 0.5 V or less
M2 - M1	ON → OFF	

HINT:
*The rear differential should be locked mechanically.
If the circuit is not as specified, replace the ECU.

  (4) Install the ECU in place.

DF

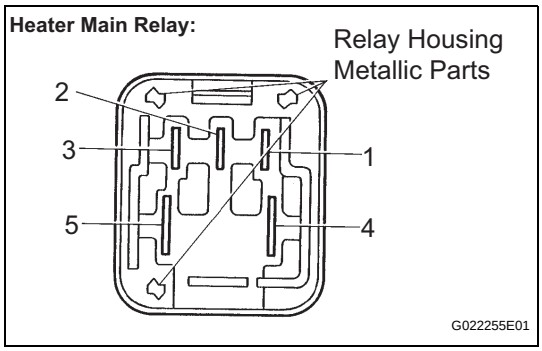

4. INSPECT DIFFERENTIAL LOCK COMPONENTS

(a) Inspect the relay operation.

(1) Jack up the vehicle.

(2) Use a heater main relay and connect it, as shown below.

NOTICE:

Connect the terminals being careful not to touch the neighboring terminals or metallic parts of the relay housing.

(3) Rotate the tire and check that the differential locks.

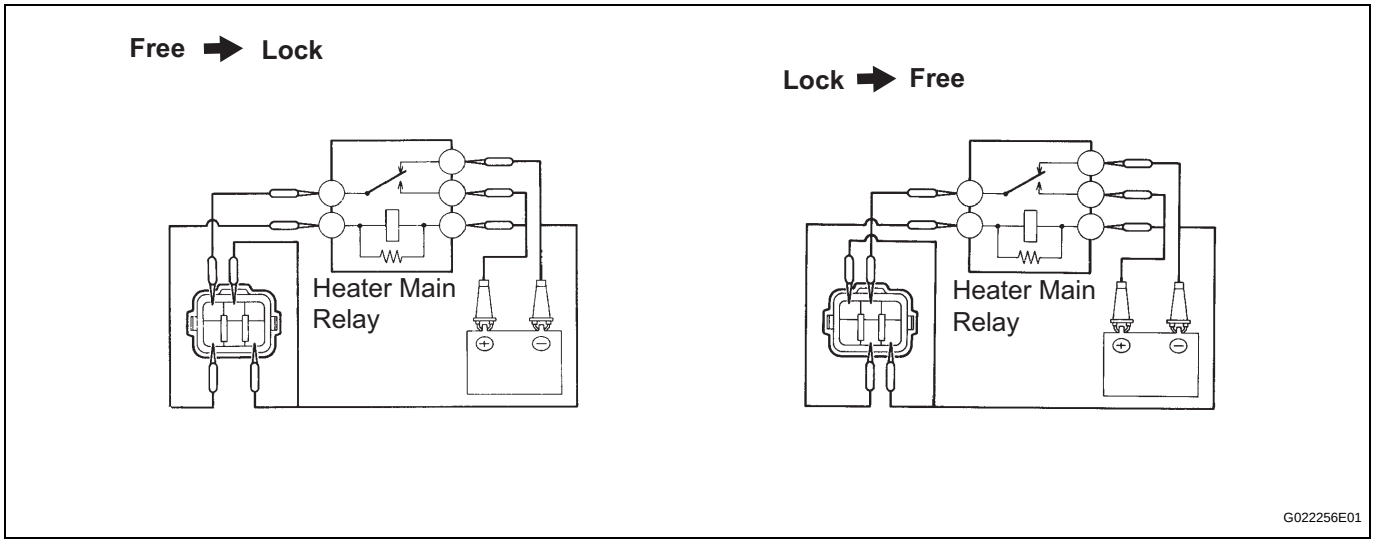

If the operation is not as specified, replace the actuator.

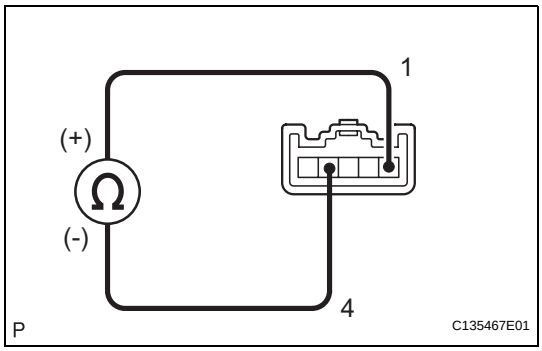

5. INSPECT REAR DIFFERENTIAL LOCK SWITCH

(a) Inspect the differential lock switch.

(1) Inspect the resistance between terminals 1and 4.

Standard resistance:

Below 1 Ω

HINT:

If the result is not as specified, replace the switch.

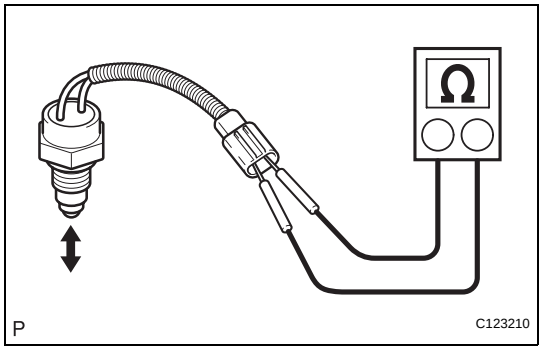

6. INSPECT REAR DIFFERENTIAL LOCK INDICATOR SWITCH

(a) Inspect the No. 4 transfer indicator switch.

(1) Measure the resistance between the terminals when the switch is pushed (differential connected position).

Standard resistance:

Below 1 Ω

(2) Measure the resistance between the terminals when switch is released (differential disconnected position).

Standard resistance:

10 kΩ or higher

DF

HINT:
If the operation is not as specified, replace the switch.

(b) Inspect the L position switch (see page TF-45).
(c) Inspect the vehicle speed sensor (see page BC-47).

POWER DOOR LOCK CONTROL SYSTEM

PRECAUTION

1. DISCONNECT AND RECONNECT CABLE OF NEGATIVE BATTERY TERMINAL
NOTICE:
When disconnecting the cable from the negative (-) battery terminal, initialize the following systems after the cable is reconnected.

System Name	See procedure
METER / GAUGE SYSTEM	See page ME-10

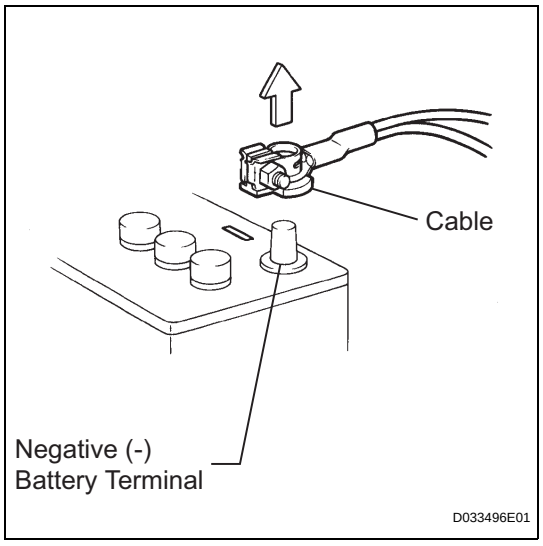

(a) Before performing electronic work, disconnect the cable from the negative (-) battery terminal in order to prevent it from shorting and burning out.
(b) Before disconnecting and reconnecting the battery cable, turn the ignition switch OFF and the headlight dimmer switch OFF. Then loosen the terminal nut completely. Do not damage the cable or terminal.
(c) When the battery cable is disconnected, the clock and radio settings and stored DTCs are erased. Therefore, before disconnecting the battery cable, make a notes of them.

PARTS LOCATION

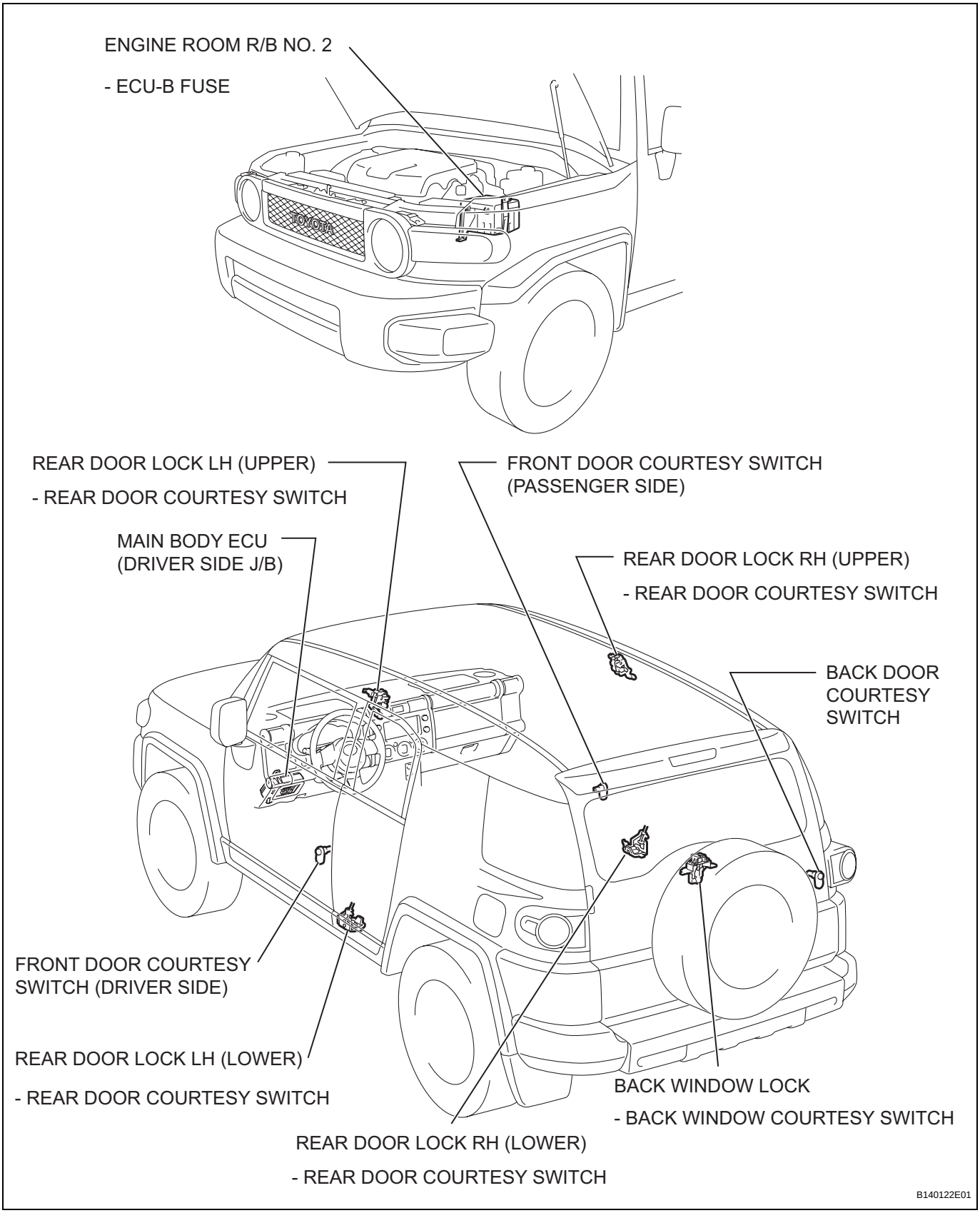

DL

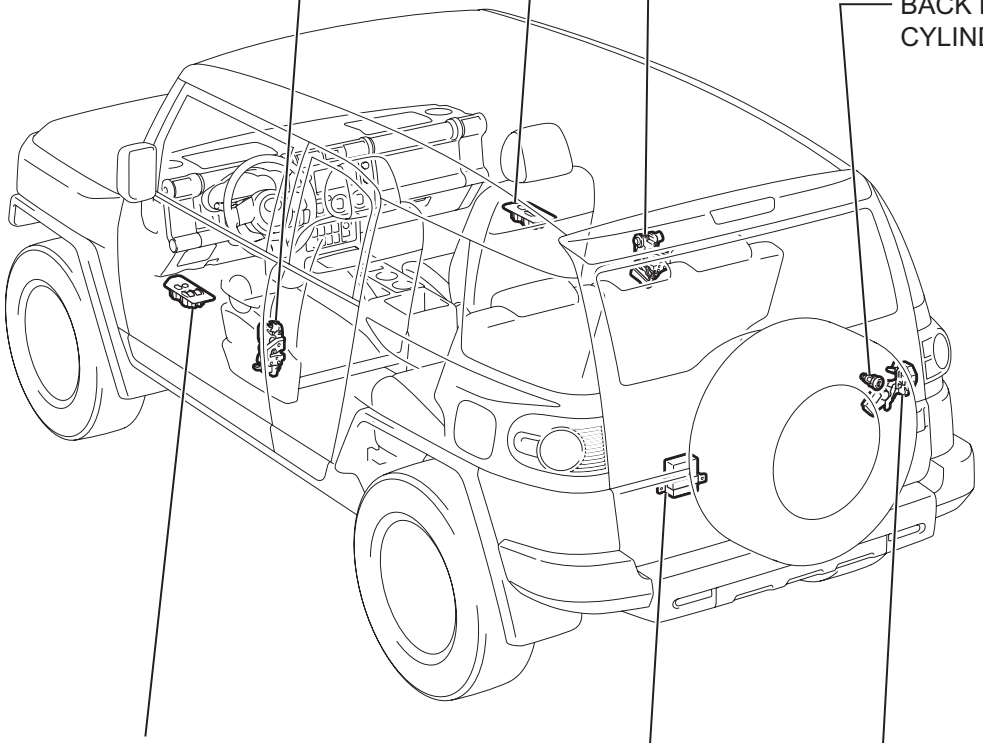

P

B138200E01

DL

SYSTEM DIAGRAM

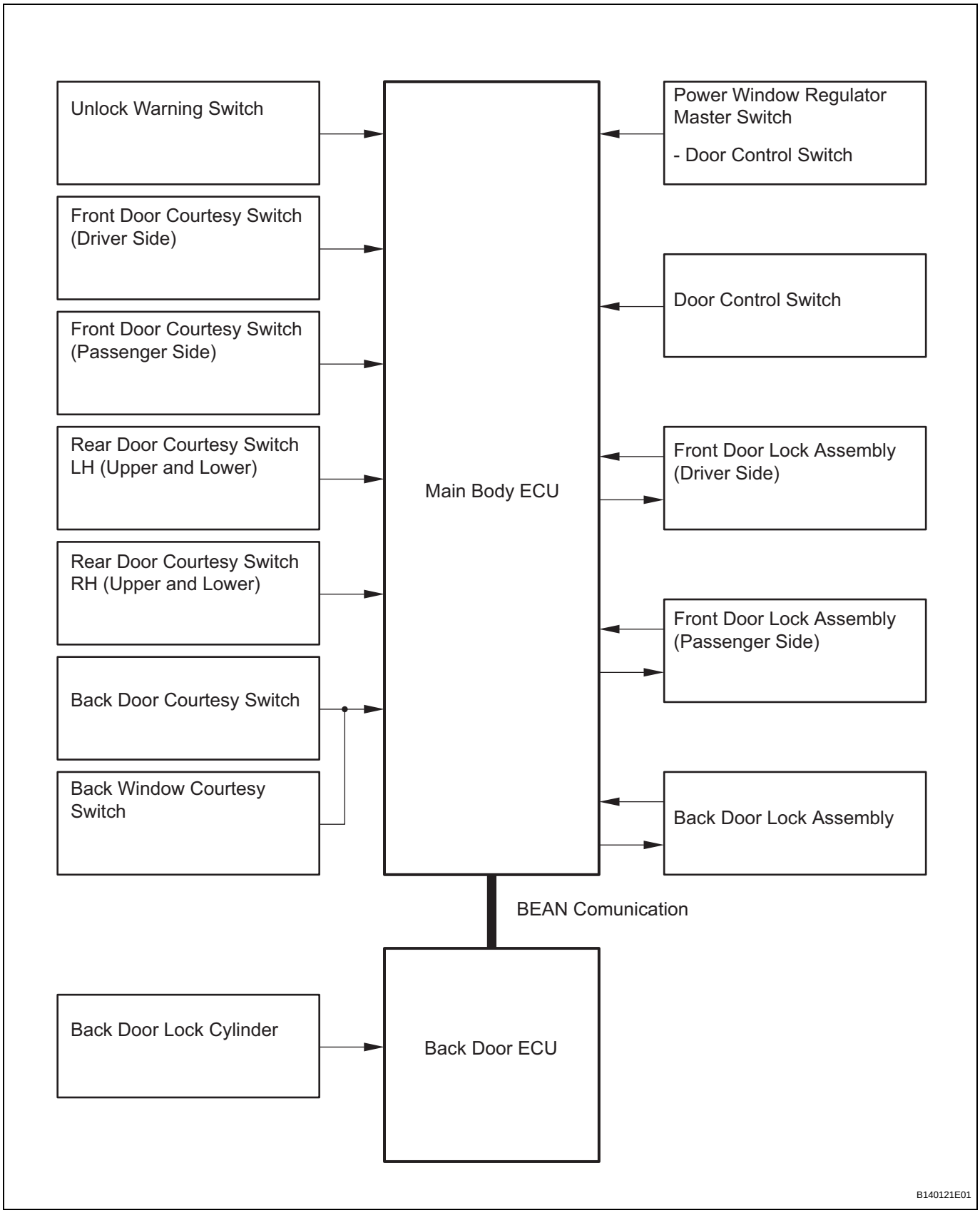

DL

SYSTEM DESCRIPTION

1. POWER DOOR LOCK CONTROL SYSTEM DESCRIPTION

The power door lock system locks / unlocks all the doors simultaneously.

The door control switch of the power window regulator master switch or door control switch on the front passenger side sends lock / unlock request signals to the main body ECU. Then, the main body ECU sends these requests to the lock motors in each door to lock / unlock all the doors simultaneously. Operating the driver side door, front passenger side door, or back door lock using a key sends lock / unlock request signals to the main body ECU.

2. FUNCTION OF MAIN COMPONENTS

Component	Function
Power window regulator master switch (Door control switch)	Locks / unlocks all doors
Door control switch (Front passenger side)	Locks / unlocks all doors
Door courtesy switch	• One for each door • Detects door status (open or closed) and outputs data to main body ECU • Turns on when door is open and off when door is closed
Driver side door lock Front passenger side door lock	• Built-in motor locks / unlocks door • Built-in door lock and unlock switch (key-linked) detects door lock status (locked or unlocked) and outputs data to main body ECU • Built-in unlock detection switch detects door status (locked or unlocked) and outputs data to main body ECU. This switch turns off when door is locked and on when door is unlocked.
Back door lock	• Built-in motor locks / unlocks door • Built-in unlock detection switch detects door status (locked or unlocked) and outputs data to main body ECU. This switch turns off when door is locked and on when door is unlocked.
Back door lock cylinder	Built-in door lock and unlock switch (key-linked) detects door lock status (locked or unlocked) and outputs data to back door ECU

3. DESCRIPTION

This system is controlled by the main body ECU. The main body ECU outputs signals to each door lock motor. The door lock control system in the vehicle has the following functions:

Function	Outline
Manual lock and unlock function	Locks / unlocks all doors by door control switch (for front driver door side) and door control switch (for front passenger side) lock operation (manual operation)
Key-linked lock and unlock function	Linked with key cylinder. Locks / unlocks all doors when lock / unlock operation is possible.
Key-linked 2-step unlock	Unlocks only driver door by turning key cylinder once and unlocks other doors by turning it twice.
Key lock-in prevention function	When key is inserted in ignition key cylinder and door lock operation is performed, all doors are unlocked.
All doors lock with transmitter	Pressing transmitter's LOCK switch locks all doors
All doors unlock with transmitter	Pressing transmitter's UNLOCK switch unlocks all doors

HOW TO PROCEED WITH TROUBLESHOOTING

HINT:

- Use these procedures to troubleshoot the power door lock control system.
- *: Use the intelligent tester.

1	VEHICLE BROUGHT TO WORKSHOP

NEXT

2	CUSTOMER PROBLEM ANALYSIS CHECK AND SYMPTOM CHECK

NEXT

3	INSPECT BATTERY VOLTAGE

Standard:

11 to 14 V

If the voltage is below 11 V, recharge or replace battery before proceeding.

NEXT

4	INSPECT COMMUNICATION FUNCTION OF LARGE-SCALE MULTIPLEX COMMUNICATION SYSTEM (BEAN)*

(a) Use the intelligent tester to check if the Multiplex Communication System (MPX) is functioning normally.

Result

Result	Proceed to
MPX DTC is not output	A
MPX DTC is output	B

B → **GO TO MULTIPLEX COMMUNICATION SYSTEM**

A

5	PROBLEM SYMPTOMS TABLE

Result

Result	Proceed to
If fault is not listed in problem symptoms table	A
If fault is listed in problem symptoms table	B

B	**Go to step 7**

A

6	**OVERALL ANALYSIS AND TROUBLESHOOTING***

(a) Terminals of ECU (see page DL-9)
(b) DATA LIST / ACTIVE TEST (see page LI-18)

NEXT

7	**REPAIR OR REPLACE**

NEXT

8	**CONFIRMATION TEST**

NEXT

END

CUSTOMIZE PARAMETERS

1. CUSTOMIZING FUNCTION WITH INTELLIGENT TESTER (REFERENCE)

HINT:

- When the customer requests modification of items, first make sure that the functions can be customized.
- Make a note of the current settings before customization.
- When troubleshooting items, first make sure that the functions are set to their default settings.
- The following items can be customized.

Power door lock control system:

Display (Item)	Default	Contents	Setting
UNLK/KEY TWICE	ON	Unlocks only driver side door when driver side door key cylinder turned to unlock once, and unlocks all doors when turned to unlock twice. For OFF setting, turning it once unlocks all doors.	ON / OFF

PROBLEM SYMPTOMS TABLE

HINT:
Use the table below to help determine the causes of the problem symptom. The potential causes of the symptoms are listed in order of probability in the "Suspected Area" column of the table. Check each symptom by checking the suspected areas in the order they are listed. Replace parts as necessary.

Power door lock control system

Symptom	Suspected area	See page
All Doors cannot be Locked / Unlocked Simultaneously	Power window regulator master switch (Door control switch)	DL-16
	Door control switch (Passenger side)	
	Front door lock assembly LH	
	Front door lock assembly RH	
	Back door lock cylinder	
	Wire harness	
	Main body ECU	
	Back door ECU	
Only Driver Door LOCK / UNLOCK Functions do not Operate	Front door lock assembly LH	DL-29
	Wire harness	
	Main body ECU	
Only Passenger Door LOCK / UNLOCK Functions do not Operate	Front door lock assembly RH	DL-31
	Wire harness	
	Main body ECU	
Only Back Door LOCK / UNLOCK Functions do not Operate	Back door lock cylinder	DL-33
	Wire harness	
	Main body ECU	
Key Lock-in Prevention Function does not Work Properly	Front door courtesy light switch LH (Driver side)	DL-35
	Unlock warning switch	
	Wire harness	
	Main body ECU	

TERMINALS OF ECU

1. CHECK MAIN BODY ECU

Main Body ECU:

Left View:

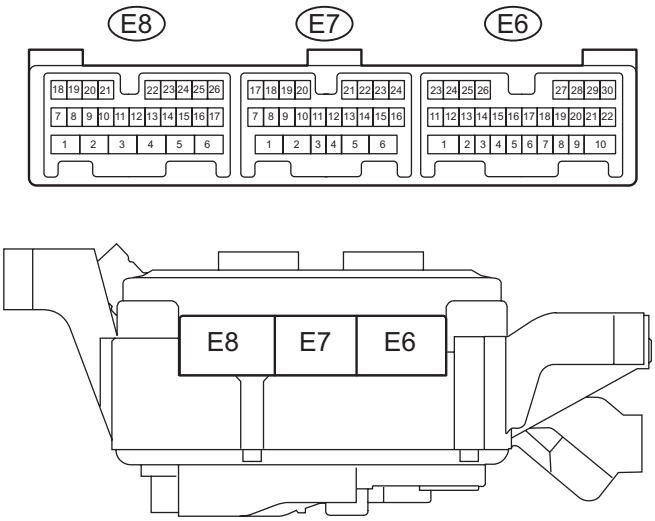

Rear View:

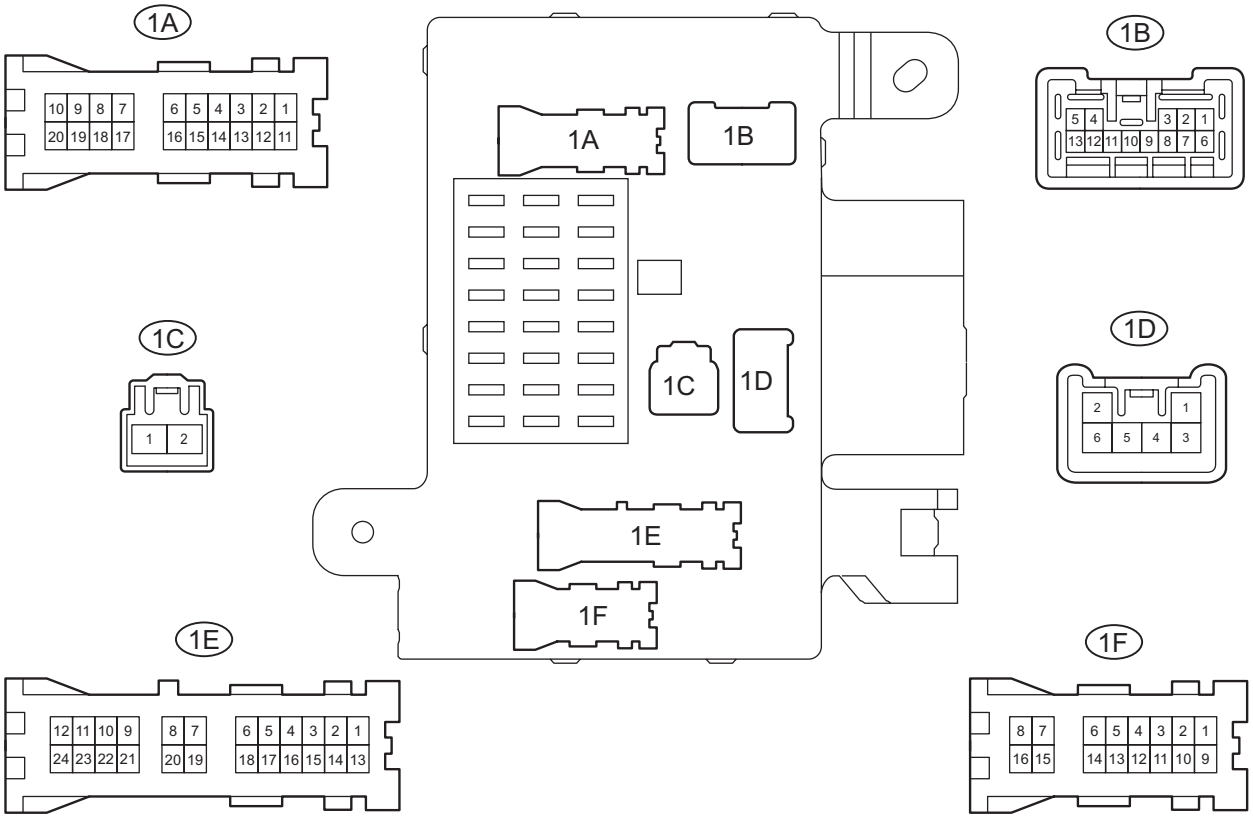

Y

B136051E01

Main Body ECU:

Front View:

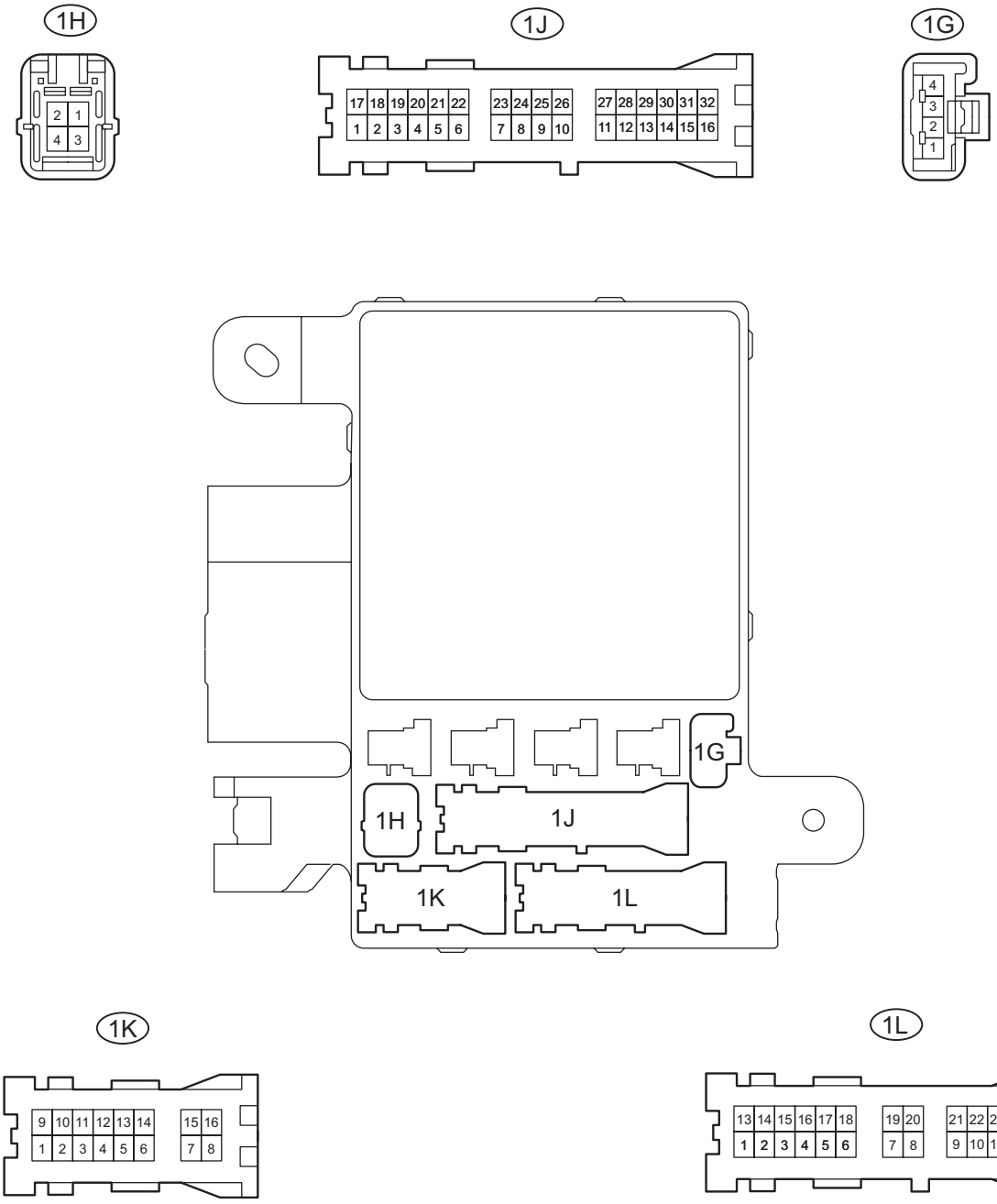

Y

B136052E01

(a) Disconnect the 1A, 1B, 1E, and 1H main body ECU connectors.

(b) Measure the voltages and resistances of the wire harness side connectors.

Standard:

Symbols (Terminal No.)	Wiring Color	Terminal Description	Condition	Specified Condition
GND1 (1H-2) - Body ground	W-B - Body ground	Ground	Always	Below 1 Ω
BECU (1B-4) - Body ground	W-R - Body ground	Power source circuit (From battery)	Always	11 to 14 V
BDR1 (1E-9) - Body ground	B-Y - Body ground	Power source circuit (From battery)	Always	11 to 14 V
GND2 (1A-7) - Body ground)	W - Body ground	Ground	Always	Below 1 Ω

If the result is not as specified, there may be a malfunction in the wire harness.

(c) Reconnect the main body ECU connectors.

(d) Measure the voltages of the wire harness side connectors.

Standard voltage:

Symbols (Terminal No.)	Wiring Color	Terminal Description	Condition	Specified Condition
SIG (1F-8) - Body ground	B-R - Body ground	Ignition switch signal	Ignition switch is OFF	Below 1V
			Ignition switch is ON	11 to 14 V
ACT+ (1L-9) - Body ground	L-R - Body ground	Driver side door lock motor LOCK drive output	Door control switch or Door key cylinder OFF	Below 1V
			Door control switch or driver side door key cylinder ON (LOCK)	11 to 14 V → Below 1 V
ACT+ (1L-6) - Body ground	L-R - Body ground	Passenger side door lock motor LOCK drive output	Door control switch or Door key cylinder OFF	Below 1V
			Door control switch or driver side door key cylinder ON (LOCK)	11 to 14 V → Below 1 V
ACT+ (1F-14) - Body ground	L-R - Body ground	Back door lock motor LOCK drive output	Door control switch or Door key cylinder OFF	Below 1V
			Door control switch or driver side door key cylinder ON (LOCK)	11 to 14 V → Below 1 V
ACTD (E6-10) - Body ground	L-B - Body ground	Driver side door lock motor UNLOCK drive output	Door control switch or Door key cylinder OFF	Below 1V
			Door control switch or driver side door key cylinder ON (UNLOCK)	11 to 14 V → Below 1 V
ACT- (1L-18) - Body ground	L-B - Body ground	Passenger side door lock motor UNLOCK drive output	Door control switch or Door key cylinder OFF	Below 1V
			Door control switch or driver side door key cylinder ON (UNLOCK)	11 to 14 V → Below 1 V
ACT- (1F-6) - Body ground	L-B - Body ground	Back door lock motor UNLOCK drive output	Door control switch or Door key cylinder OFF	Below 1V
			Door control switch or driver side door key cylinder ON (UNLOCK)	11 to 14 V → Below 1 V
LSWD (E6-21) - Body ground	W-R - Body ground	Driver side door unlock detection switch input	Driver side door unlocked	Below 1V
			Driver side door locked	10 to 14 V
LSWP (E6-30) - Body ground	B-W - Body ground	Passenger side door unlock detection switch input	Passenger side door unlocked	Below 1V
			Passenger side door locked	10 to 14 V

DL

Symbols (Terminal No.)	Wiring Color	Terminal Description	Condition	Specified Condition
LSR (1F-4) - Body ground	B - Body ground	Back door unlock detection switch input	Back door unlocked	Below 1V
			Back door locked	10 to 14 V
L2 (1K-3) - Body ground	L - Body ground	Driver side and passenger side door key-linked operated door lock switch input	Driver side and passenger side door key cylinder OFF	10 to 14 V
			Driver side or passenger side door key cylinder ON (LOCK)	Below 1 V
UL3 (E6-12) - Body ground	P - Body ground	Driver side door key-linked operated door unlock switch input	Driver side door key cylinder OFF	10 to 14 V
			Driver side door key cylinder ON (UNLOCK)	Below 1 V
UL2 (E6-22) - Body ground	Y-G - Body ground	Passenger side door key-linked operated door unlock switch input	Passenger side door key cylinder OFF	10 to 14 V
			Passenger side door key cylinder ON (UNLOCK)	Below 1 V
BCTY (E7-7) - Body ground	W - Body ground	Back door courtesy switch and back window courtesy switch input	Back door or back window open	Below 1V
			Back door and back window closed	10 to 14 V
RLCY (E7-11) - Body ground	P-B - Body ground	Rear LH door courtesy switch input	Rear LH door open	Below 1V
			Rear LH door closed	10 to 14 V
RRCY (E7-12) - Body ground	P-L - Body ground	Rear RH door courtesy switch input	Rear RH door open	Below 1V
			Rear RH door closed	10 to 14 V
DCTY (E7-23) - Body ground	R-B - Body ground	Driver door courtesy switch input	Driver door open	Below 1V
			Driver door closed	10 to 14 V
PCTY (E7-24) - Body ground	G-Y - Body ground	Front passenger door courtesy switch input	Front passenger door open	Below 1V
			Front passenger door closed	10 to 14 V
KSW (E8-14) - Body ground	G-Y - Body ground	Key unlock warning switch input	Key inserted in ignition key cylinder	Below 1V
			Key removed from ignition key cylinder	10 to 14 V
MPX2 (E6-23) - Body ground	BR-R - Body ground	Multiplex communication signal	During communication	Signal waveform

If the result is not as specified, there may be a malfunction in the wire harness.

2. CHECK BACK DOOR ECU

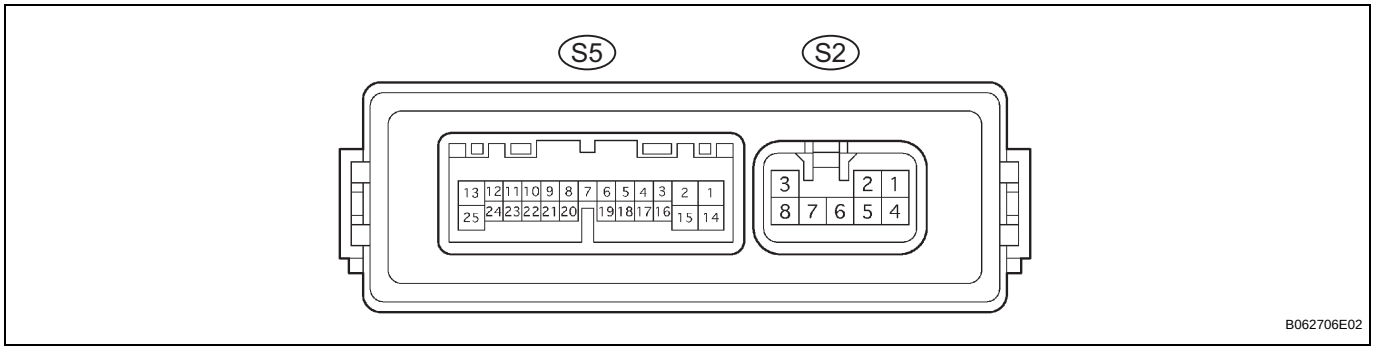

(a) Disconnect the S2 back door ECU connector.

DL

(b) Measure the voltages and resistances of the wire harness side connectors.

Standard:

Symbols (Terminal No.)	Wiring Color	Terminal Description	Condition	Specified Condition
BECU (S2-5) - Body ground	W-R - Body ground	Power source circuit (From battery)	Always	11 to 14 V
GND (S2-3) - Body ground)	W-B - Body ground	Ground	Always	Below 1 Ω

If the result is not as specified, there may be a malfunction in the wire harness.

(c) Reconnect the back door ECU connector.

(d) Measure the voltages of the wire harness side connectors.

Standard voltage:

Symbols (Terminal No.)	Wiring Color	Terminal Description	Condition	Specified Condition
SIG (S2-6) Body ground	B-R - Body ground	Ignition switch signal	Ignition switch OFF	Below 1V
			Ignition switch ON	11 to 14 V
L (S5-5) - Body ground	L - Body ground	Back door key-linked operated door lock switch input	Back door key cylinder OFF	11 to 14 V
			Back door key cylinder ON (LOCK)	Below 1 V
UL (S5-4) - Body ground	R - Body ground	Back door key-linked operated door unlock switch input	Driver side door key cylinder OFF	11 to 14 V
			Driver side door key cylinder ON (UNLOCK)	Below 1 V
MPX2 (S2-1) - Body ground	BR-R - Body ground	Multiplex communication signal	During communication	Signal waveform

If the result is not as specified, there may be a malfunction in the wire harness.

DATA LIST / ACTIVE TEST

1. READ DATA LIST

HINT:

Using the intelligent tester's DATA LIST allows a switch, sensor, actuator and other item values to be read without removing any parts. Reading the DATA LIST early in troubleshooting is one way to save time.

(a) Connect the intelligent tester with CAN VIM to the DLC3.

(b) Turn the ignition switch ON.

(c) Read the DATA LIST according to the prompts displayed on the tester.

BODY:

Item	Measurement Item/Dispay (Range)	Normal Condition	Diagnostic Note
D DOR CTY SW	Driver door courtesy switch signal/ON or OFF	ON :Driver door is open OFF: Driver door is closed	-
P DOR CTY SW	Front passenger door courtesy switch signal/ON or OFF	ON: Front passenger door is open OFF: Front passenger door is closed	-
Rr DOR CTY SW	Rear door courtesy switch signal/ ON or OFF	ON: Either right or left rear door is open OFF: Both right and left rear doors are closed	-
LUGG COURTSY SW	Back door and back window courtesy switch signal/ON or OFF	ON: Either back door or back window is open OFF: Both back door and back window are closed	-
D LOCK POS SW	Driver side door unlock detection switch signal / ON or OFF	ON: Driver side door is unlocked OFF: Driver side door is locked	-
P LOCK POS SW	Passenger side door unlock detection switch signal / ON or OFF	ON: Passenger side door is unlocked OFF: Passenger side door is locked	-
Rr LOCK POS SW	Back door unlock detection switch signal / ON or OFF	ON: Back door is unlocked OFF: Back door is locked	-
D/L SW-LOCK	Door manual lock switch signal ON or OFF	ON: Door control switch is pushed to lock position OFF: Door control switch is not pushed	-
D/L SW-UNLOCK	Door manual unlock switch signal / ON or OFF	ON: Door control switch is pushed to unlock position OFF: Door control switch is not pushed	-
DOR KEY SW-LOCK	Door key linked lock switch signal / ON or OFF	ON: Driver side door key cylinder or passenger side door key cylinder is turned to lock position OFF: Driver side door key cylinder or passenger side door key cylinder is not turned	-
D DOR KEY SW-UL	Door key linked lock switch signal / ON or OFF	ON: Driver side door key cylinder is turned to unlock position OFF: Driver side door key cylinder is not turned	-
P DOR KEY SW-UL	Door key linked lock switch signal / ON or OFF	ON: Passenger side door key cylinder is turned to unlock position OFF: Passenger side door key cylinder is not turned	-

BACK-DOOR:

Item	Measurement Item/Dispay (Range)	Normal Condition	Diagnostic Note
KEY SW (LOCK)	Door key linked lock switch signal / ON or OFF	ON: Back door key cylinder is turned to lock position OFF: Back door key cylinder is not turned	-
KEY SW (UNLOCK)	Door key linked lock switch signal / ON or OFF	ON: Back door key cylinder is turned to unlock position OFF: Back door key cylinder is not turned	-

2. PERFORM ACTIVE TEST

HINT:

Performing the intelligent tester's ACTIVE TEST allows relays, VSV, actuators and other items to be operated without removing any parts. Performing the ACTIVE TEST early in troubleshooting is one way to save time. The DATA LIST can be displayed during the ACTIVE TEST.

(a) Connect the intelligent tester with CAN VIM to the DLC3.

(b) Turn the ignition switch ON.

(c) Perform the ACTIVE TEST according to the prompts displayed on the tester.

BODY:

Item	Test Details/ Display (Range)	Diagnostic Note
DOOR LOCK	Operate door lock motor LOCK/UNLOCK	-

ON-VEHICLE INSPECTION

1. CHECK ELECTRICAL DOOR LOCK OPERATION

(a) Check that all doors lock when the door control switch (for manual operation) is turned to LOCK and all doors unlock when turned to UNLOCK.

(b) Check that all doors lock when the door lock key cylinder is turned to LOCK using the mechanical key and unlock when turned to UNLOCK using the mechanical key.

(c) Check that only the driver side door unlocks when the driver side door lock key cylinder is turned to UNLOCK and all doors unlock when turned to UNLOCK once again within 3 seconds using the key (2-step unlocking function).

(d) Check the key lock-in prevention function.

NOTICE:

Perform this operation with the driver door window open to prevent the key from being locked inside the vehicle.

(1) Insert the ignition key into the ignition key cylinder.

(2) Check that all doors are immediately unlocked when the driver side door lock knob is turned to the lock position with the driver door open.

(3) Check that all doors are immediately unlocked when the door control switch (for driver side) or door control switch (for front passenger side) is turned to the lock position with the driver door open.

(4) Check that all doors are unlocked when the driver door is closed after the driver door lock knob is held in the lock position for 2 seconds with the driver door open.

All Doors cannot be Locked / Unlocked Simultaneously

DESCRIPTION

The main body ECU receives switch signals from the door control switch on the power window regulator master switch, door control switch, driver side door key cylinder, passenger side door key cylinder and back door key cylinder, and activates the door lock motor on each door accordingly.

WIRING DIAGRAM

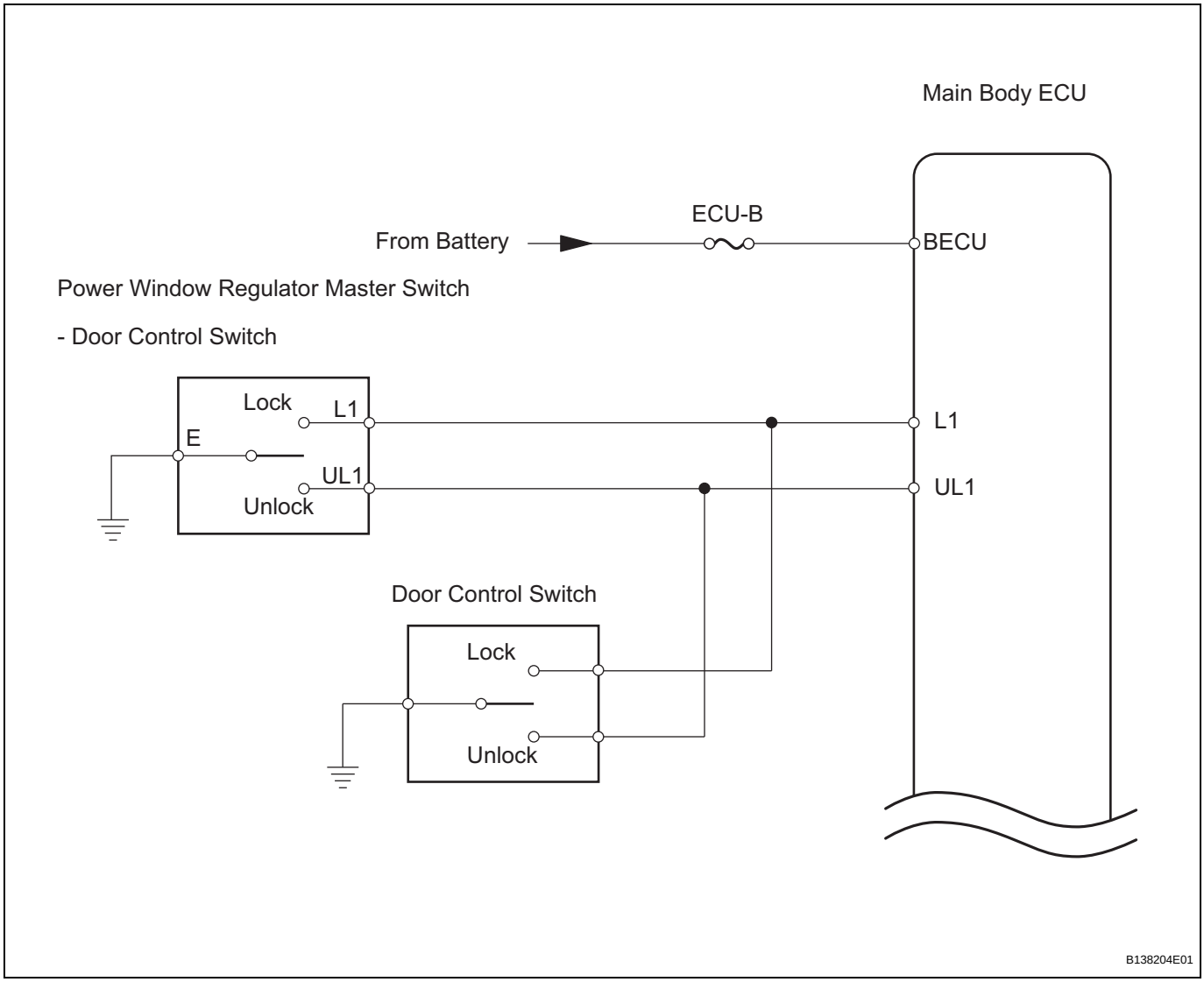

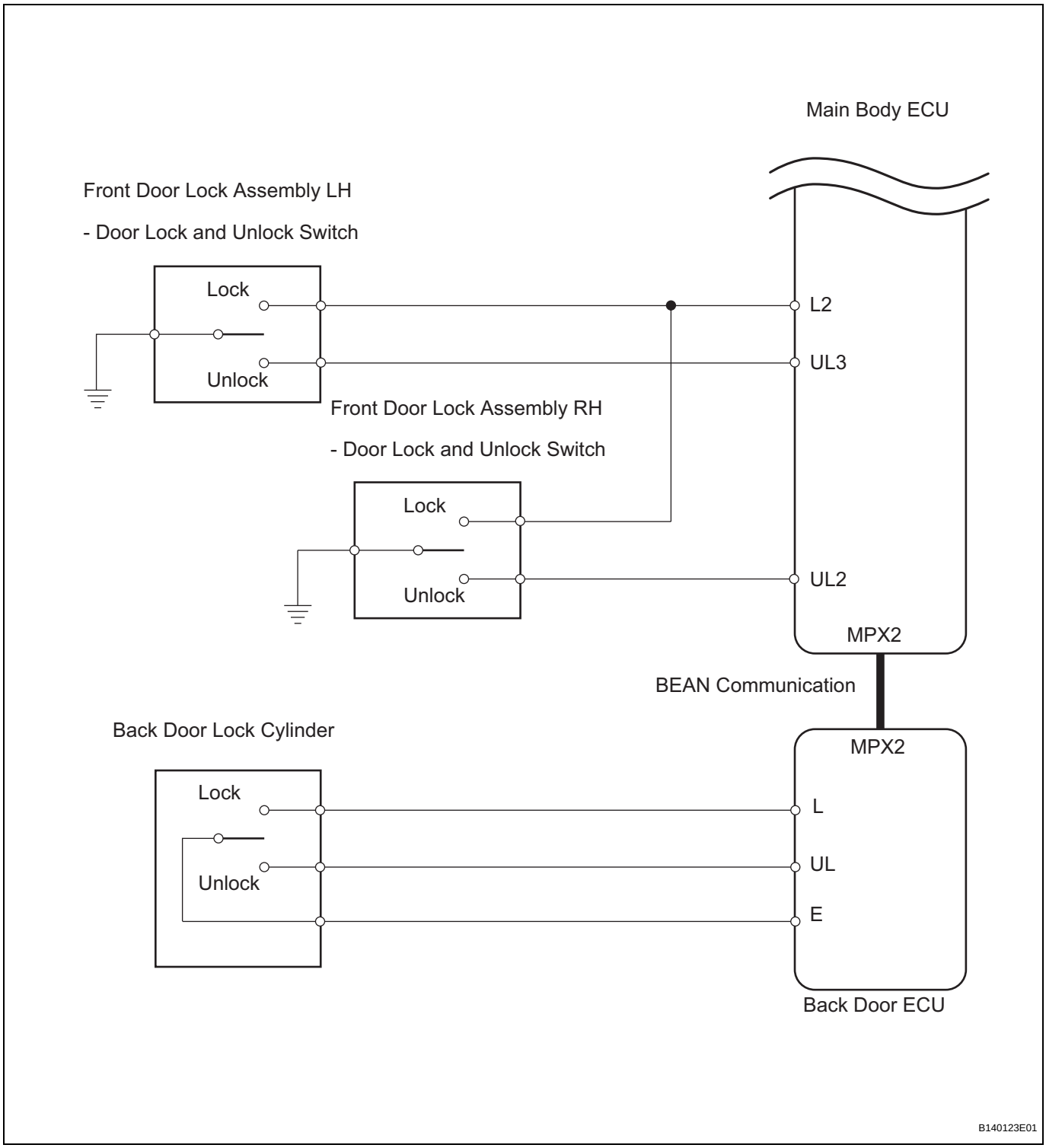

INSPECTION PROCEDURE

1	**PERFORM ACTIVE TEST BY INTELLIGENT TESTER (DOOR LOCK)**

(a) Connect the intelligent tester with CAN VIM to the DLC3.
(b) Turn the ignition switch ON and turn the tester ON.
(c) Select the item below in the ACTIVE TEST and then check that the security indicator operates.

BODY

Item	Test Details	Diagnostic Note
DOOR LOCK	Operate door lock motor LOCK/UNLOCK	-

OK:
Doors can lock / unlock.

OK → **Go to step 4**

NG

2 INSPECT FUSE (ECU-B)

(a) Remove the ECU-B fuse from the engine room R/B No.2.
(b) Measure the resistance.
Standard resistance:
Below 1 Ω
(c) Reinstall the ECU-B fuse.

NG → **REPLACE FUSE**

OK

3 CHECK HARNESS AND CONNECTOR (MAIN BODY ECU - BATTERY, BODY GROUND)

Wire Harness Side:

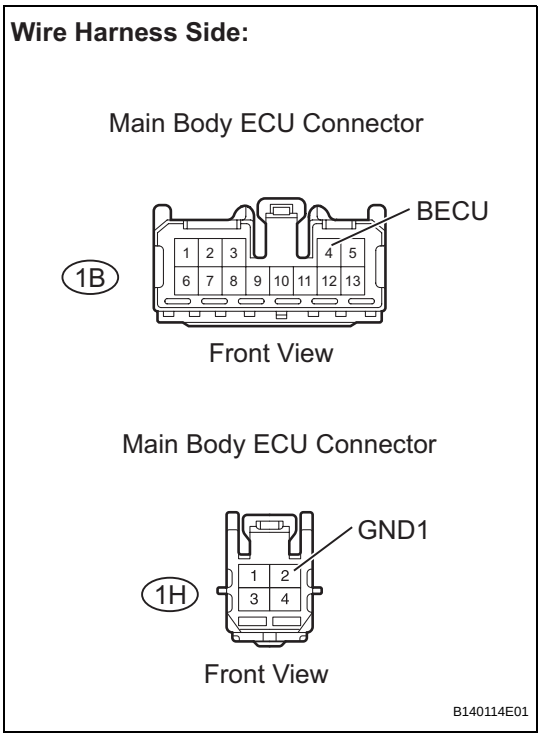

(a) Disconnect the 1B and 1H main body ECU connectors.
(b) Measure the voltage.
Standard voltage

Tester Connection	Specified Condition
IB-4 (BECU) - Body ground	11 to 14 V

(c) Measure the resistance.
Standard resistance

Tester Connection	Specified Condition
IH-2 (GND1) - Body ground	Below 1 Ω

(d) Reconnect the main body ECU connectors.

NG → **REPAIR OR REPLACE HARNESS OR CONNECTOR**

OK

REPLACE MAIN BODY ECU

4	CHECK OPERATION (ALL DOORS LOCK/ UNLOCK)

(a) All doors can be locked/unlocked at once using the following:
- Door control switch on the power window regulator master switch (switch operation)
- Door control switch on the front passenger side (switch operation).
- Door key cylinder linked with door lock on the driver side (key operation)
- Door key cylinder linked with door lock on the passenger side (key operation)
- Door key cylinder linked with door lock on the back door (key operation)

(b) Proceed to the next step according to the symptom if all the doors cannot be locked / unlocked at once.

Result

Symptom	Proceed to
All doors cannot be locked / unlocked at once using door control switch.	A
All doors cannot be locked / unlocked at once using door key cylinder	B

B → Go to step 12

A

5	CHECK OPERATION (DOOR CONTROL SWITCH)

(a) Proceed to the next step according to the symptom listed in the table below.

Result

Symptom	Proceed to
All doors cannot be locked / unlocked at once using door control switch on power window regulator master switch	A
All doors cannot be locked / unlocked at once using door control switch on front passenger side	B

B → Go to step 9

A

6	READ VALUE OF INTELLIGENT TESTER (DOOR CONTROL SWITCH)

(a) Connect the intelligent tester with CAN VIM to the DLC3.
(b) Turn the ignition switch ON and turn the intelligent tester main switch ON.
(c) Select the items below in the "DATA LIST" and read the display on the intelligent tester.

BODY

Item	Measurement Item / Display (Range)	Normal Condition	Diagnostic Note
D/L SW-LOCK	Door manual lock switch signal / ON or OFF	ON: Door control switch on power window regulator master switch is pushed to lock position OFF: Door control switch on power window regulator master switch is not pushed	-
D/L SW-UNLOCK	Door manual unlock switch signal / ON or OFF	ON: Door control switch on power window regulator master switch is pushed to unlock position OFF: Door control switch on power window regulator master switch is not pushed	-

OK:

When the switch is operaed, the intelligent tester displays ON and OFF as shown in the table.

OK → **REPLACE MAIN BODY ECU**

NG

7	INSPECT POWER WINDOW REGULATOR MASTER SWITCH ASSEMBLY (DOOR CONTROL SWITCH)

DL

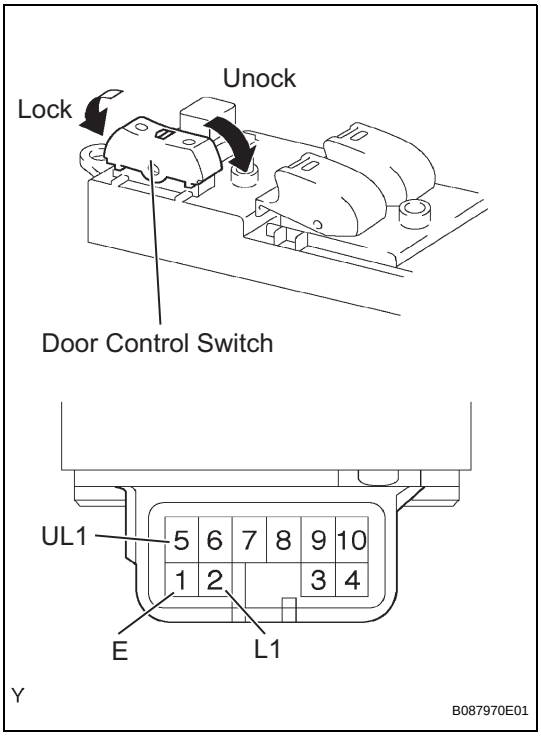

(a) Remove the power window regulator master switch (door control switch).

(b) Measure the resistance

Standard resistance

Tester Connection	Switch Condition	Specified Condition
1 (E) - 2 (L1)	Locked	Below 1 Ω
1 (E) - 2 (L1)	OFF	10 kΩ or higher
1 (E) - 5 (UL1)	OFF	10 kΩ or higher
1 (E) - 5 (UL1)	Unlocked	Below 1 Ω

(c) Reinstall the power window regulator master switch.

NG → **REPLACE POWER WINDOW REGULATOR MASTER SWITCH ASSEMBLY**

OK

8	CHECK HARNESS AND CONNECTOR (DOOR CONTROL SWITCH - MAIN BODY ECU, BODY GROUND)

Wire Harness Side:

Power Window Regulator Master Switch Connector

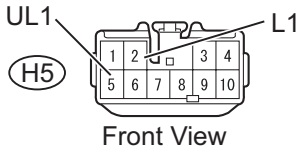

Front View

Main Body ECU Connector

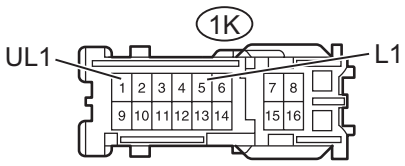

Front View

B140115E01

(a) Disconnect the 1K main body ECU connector.
(b) Disconnect the H5 power window regulator master switch (door control switch) connector.
(c) Measure the resistance of the wire harness side connectors.

Standard resistance

Tester Connection	Specified Condition
H5-2 (L1) - 1K-5 (L1)	Below 1 Ω
H5-5 (UL1) - 1K-1 (UL1)	Below 1 Ω
H5-2 (L1) or 1K-5 (L1) - Body ground	10 kΩ or higher
H5-5 (UL1) or 1K-1 (UL1) - Body ground	10 kΩ or higher

(d) Reconnect the main body ECU connector.
(e) Reconnect the the power window regulator master switch connector.

NG → **REPAIR OR REPLACE HARNESS OR CONNECTOR**

OK

REPLACE MAIN BODY ECU

9	READ VALUE OF INTELLIGENT TESTER (DOOR CONTROL SWITCH)

(a) Connect the intelligent tester with CAN VIM to the DLC3.
(b) Turn the ignition switch ON and turn the intelligent tester main switch ON.
(c) Select the items below in the "DATA LIST" and read the display on the intelligent tester.

BODY

Item	Measurement Item / Display (Range)	Normal Condition	Diagnostic Note
D/L SW-LOCK	Door manual lock switch signal / ON or OFF	ON: Passenger side door control switch is pushed to lock position OFF: Passenger side door control switch is not pushed	-
D/L SW-UNLOCK	Door manual unlock switch signal / ON or OFF	ON: Passenger side door control switch is pushed to unlock position OFF: Passenger side door control switch is not pushed	-

OK:

When the door key cylinder is operated, the intelligent tester displays ON and OFF as shown in the table.

DL

OK → REPLACE MAIN BODY ECU

NG

10 INSPECT DOOR CONTROL SWITCH ASSEMBLY

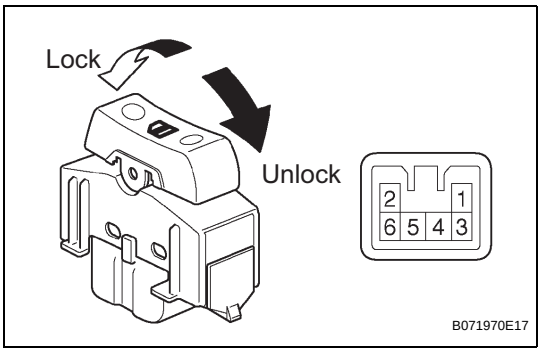

(a) Remove the door control switch (front passenger side).
(b) Measure the resistance
Standard resistance

Tester Connection	Switch Condition	Specified Condition
3 - 6	Locked	Below 1 Ω
3 - 6	OFF	10 kΩ or higher
3 - 5	OFF	10 kΩ or higher
3 - 5	Unlocked	Below 1 Ω

(c) Reinstall the door control switch.

NG → REPLACE DOOR CONTROL SWITCH ASSEMBLY

OK

11 CHECK HARNESS AND CONNECTOR (DOOR CONTROL SWITCH - MAIN BODY ECU, BODY GROUND)

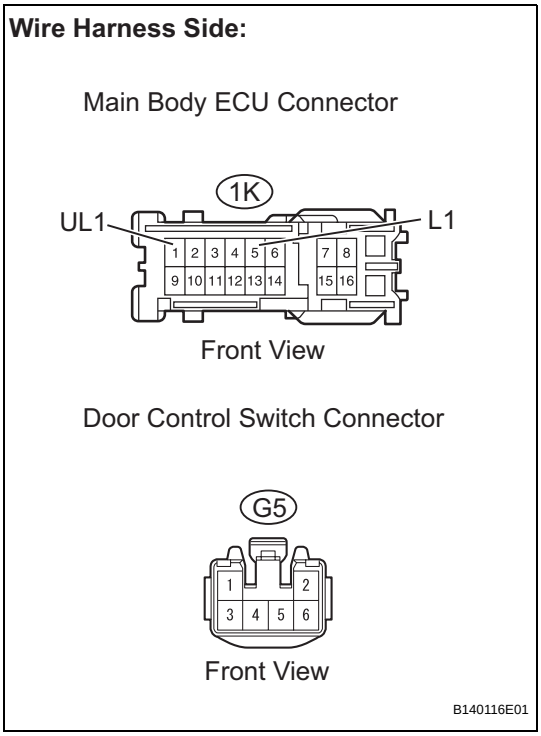

(a) Disconnect the 1K main body ECU connector.
(b) Disconnect the G5 door control switch (front passenger side) connector.
(c) Measure the resistance of the wire harness side connectors.

Standard resistance

Tester Connection	Specified Condition
G5-6 - 1K-5 (L1)	Below 1 Ω
G5-5 - 1K-1 (UL1)	Below 1 Ω
G5-6 or 1K-5 (L1) - Body ground	10 kΩ or higher
G5-5 or 1K-1 (UL1) - Body ground	10 kΩ or higher

(d) Reconnect the main body ECU connector.
(e) Reconnect the the door control switch connector.

NG → REPAIR OR REPLACE HARNESS OR CONNECTOR

OK

REPLACE MAIN BODY ECU

12	CHECK OPERATION (DOOR KEY CYLINDER)

(a) Proceed to the next step according to the symptom listed in the table below.

Result

Symptom	Proceed to
All doors cannot be locked / unlocked at once using door key cylinder on driver side	A
All doors cannot be locked / unlocked at once using door key cylinder on front passenger side	B
All doors cannot be locked / unlocked at once using door key cylinder on back door	C

B → Go to step 16

C → Go to step 19

A

13	READ VALUE OF INTELLIGENT TESTER (DOOR KEY SWITCH)

(a) Connect the intelligent tester with CAN VIM to the DLC3.
(b) Turn the ignition switch ON and turn the intelligent tester main switch ON.
(c) Select the items below in the "DATA LIST" and read the display on the intelligent tester.

DL

BODY

Item	Measurement Item / Display (Range)	Normal Condition	Diagnostic Note
DOR KEY SW-LOCK	Door key linked lock switch signal / ON or OFF	ON: Driver side door key cylinder is turned to lock position OFF: Driver side door key cylinder is not turned	-
D DOR KEY SW-UL	Door key linked unlock switch signal / ON or OFF	ON: Driver side door key cylinder is turned to unlock position OFF: Driver side door key cylinder is not turned	-

OK:

When the switch is operating, the intelligent tester should display as shown in the table.

OK → REPLACE MAIN BODY ECU

NG

14	INSPECT FRONT DOOR LOCK ASSEMBLY LH

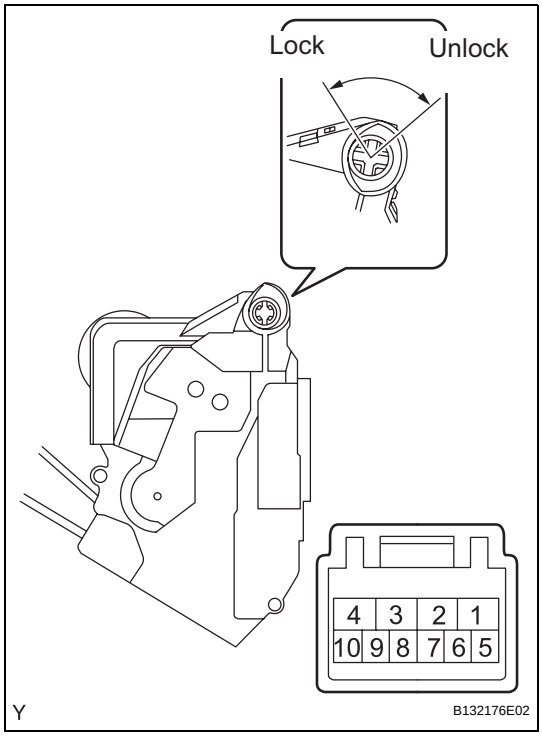

(a) Remove the front door lock assembly LH (driver side).
(b) Measure the resistance of the door lock and unlock switch.

Standard resistance

Tester Connection	Door Lock Condition	Specified Condition
7 - 9	Locked	Below 1 Ω
7 - 9	Unlocked	10 kΩ or higher
7 - 10	Locked	10 kΩ or higher
7 - 10	Unlocked	Below 1 Ω

(c) Reinstall the front door lock assembly LH.

NG → **REPLACE FRONT DOOR LOCK ASSEMBLY LH**

DL

OK

15	CHECK HARNESS AND CONNECTOR (FRONT DOOR LOCK ASSEMBLY LH - MAIN BODY ECU)

Wire Harness Side:

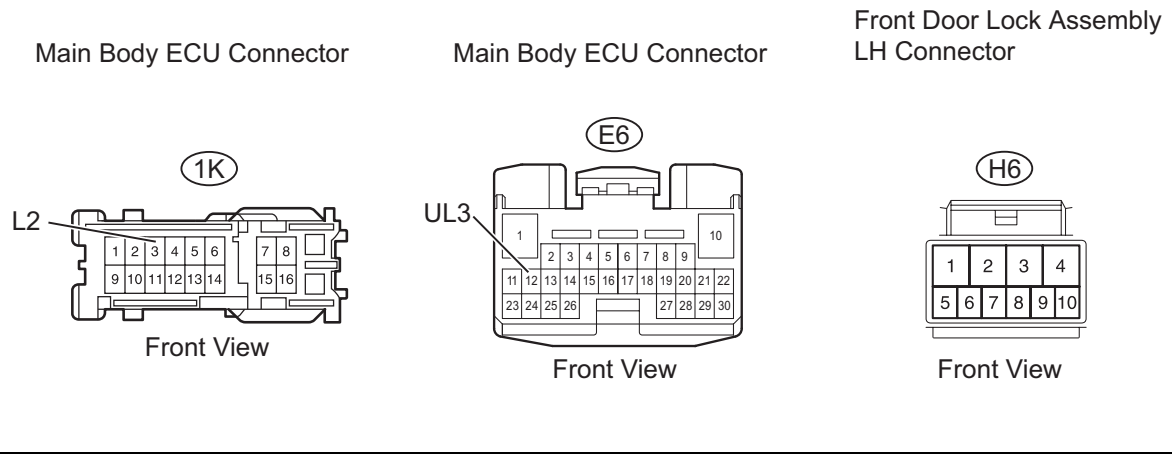

(a) Disconnect the 1K and E6 main body ECU connectors.
(b) Disconnect the H6 front door lock assembly LH connector.
(c) Measure the resistance.

Standard resistance

Tester Connection	Specified Condition
H6-9 - 1K-3 (L2)	Below 1 Ω
H6-10 - E6-12 (UL3)	Below 1 Ω
H6-9 or 1K-3 (L2) - Body ground	10 kΩ or higher
H6-10 or E6-12 (UL3) - Body ground	10 kΩ or higher

(d) Reconnect the main body ECU connectors.
(e) Reconnect the front door lock assembly LH connector.

NG → **REPAIR OR REPLACE HARNESS OR CONNECTOR**

OK

REPLACE MAIN BODY ECU

16 **READ VALUE OF INTELLIGENT TESTER (DOOR KEY SWITCH)**

(a) Connect the intelligent tester with CAN VIM to the DLC3.
(b) Turn the ignition switch ON and turn the intelligent tester main switch ON.
(c) Select the items below in the "DATA LIST" and read the display on the intelligent tester.

DL

BODY

Item	Measurement Item / Display (Range)	Normal Condition	Diagnostic Note
DOR KEY SW-LOCK	Door key linked lock switch signal / ON or OFF	ON: Front passenger side door key cylinder is turned to lock position OFF: Front passenger side door key cylinder is not turned	-
P DOR KEY SW-UL	Door key linked unlock switch signal / ON or OFF	ON: Front passenger side door key cylinder is turned to unlock position OFF: Front passenger side door key cylinder is not turned	-

OK:
When the door key cylinder is operated, the intelligent tester displays ON and OFF as shown in the table.

OK → **REPLACE MAIN BODY ECU**

NG

17	INSPECT FRONT DOOR LOCK ASSEMBLY RH

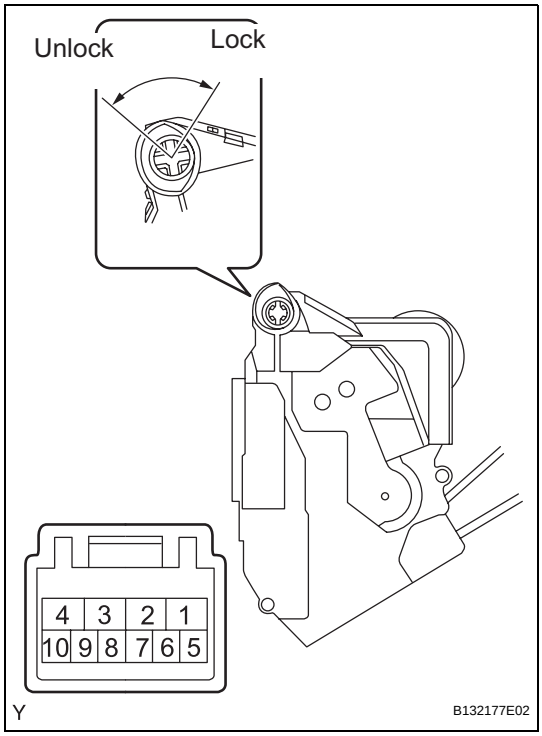

(a) Remove the front door lock assembly RH (front passenger side).
(b) Measure the resistance of the door lock and unlock switch.

Standard resistance

Tester Connection	Door Lock Condition	Specified Condition
6 - 8	Locked	Below 1 Ω
6 - 8	Unlocked	10 kΩ or higher
5 - 8	Locked	10 kΩ or higher
5 - 8	Unlocked	Below 1 Ω

(c) Reinstall the front door lock assembly RH.

NG → **REPLACE FRONT DOOR LOCK ASSEMBLY RH**

OK

18	CHECK HARNESS AND CONNECTOR (FRONT DOOR LOCK ASSEMBLY RH - MAIN BODY ECU)

Wire Harness Side:

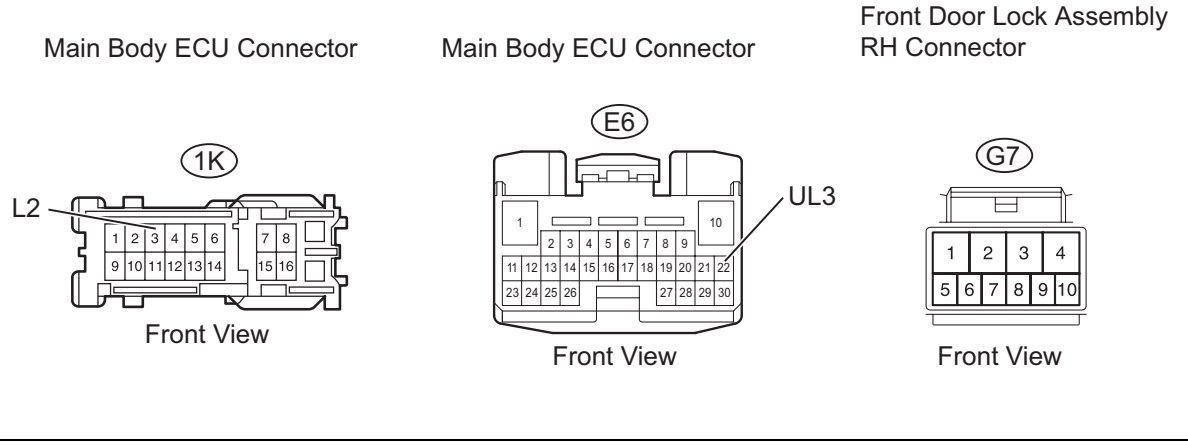

(a) Disconnect the 1K and E6 main body ECU connectors.
(b) Disconnect the G7 front door lock assembly RH connector.
(c) Measure the resistance.

Standard resistance

Tester Connection	Specified Condition
G7-6 - 1K-3 (L2)	Below 1 Ω
G7-5 - E6-22 (UL2)	Below 1 Ω
G7-6 or 1K-3 (L2) - Body ground	10 kΩ or higher
G7-5 or E6-22 (UL2) - Body ground	10 kΩ or higher

(d) Reconnect the main body ECU connectors.
(e) Reconnect the front door lock assembly RH connector.

NG → **REPAIR OR REPLACE HARNESS OR CONNECTOR**

OK

REPLACE MAIN BODY ECU

19 CHECK DTC OUTPUT

(a) Connect the intelligent tester with CAN VIM to the DLC3.
(b) Turn the ignition switch ON and turn the tester ON.
(c) Clear the DTCs.
(d) Check whether DTC B1287 recurs 10 seconds or more after the ignition switch is turned on.

OK:
No DTC is output.

NG → **GO TO MULTIPLEX COMMUNICATION SYSTEM**

OK

20 INSPECT BACK DOOR LOCK CYLINDER

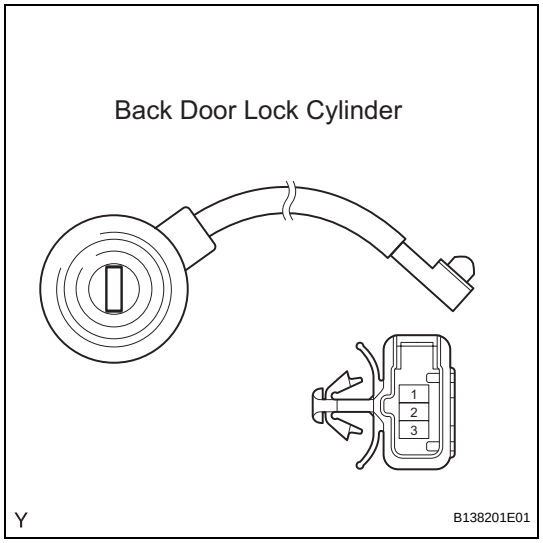

(a) Remove the back door lock cylinder.
(b) Measure the resistance of the the back door lock cylinder (door lock and unlock switch).

Standard resistance

Tester Connection	Key Condition	Specified Condition
2 - 1	Lock position	Below 1 Ω
2 - 1	Unlock position	10 kΩ or higher
3 - 1	Lock position	10 kΩ or higher
3 - 1	Unlock position	Below 1 Ω

(c) Reinstall the the back door lock cylinder.

NG → **REPLACE BACK DOOR LOCK CYLINDER**

OK

21	CHECK HARNESS AND CONNECTOR (BACK DOOR LOCK CYLINDER - BACK DOOR ECU)

Wire Harness Side:

Back Door ECU Connector

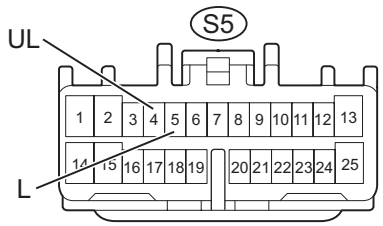

Front View

Back Door Lock Cylinder Connector

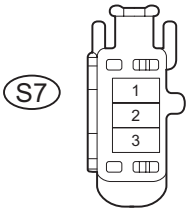

Front View

Y

B138202E01

(a) Disconnect the S5 back door ECU connector.
(b) Disconnect the S7 back door lock cylinder connector.
(c) Measure the resistance.

Standard resistance

Tester Connection	Specified Condition
S7-2 - S5-5 (L)	Below 1 Ω
S7-3 - S5-4 (UL)	Below 1 Ω
S7-2 or S5-5 (L) - Body ground	10 kΩ or higher
S7-3 or S5-4 (UL) - Body ground	10 kΩ or higher

(d) Reconnect the back body ECU connector.
(e) Reconnect the back door lock cylinder connector.

NG → **REPAIR OR REPLACE HARNESS OR CONNECTOR**

DL

OK

REPLACE BACK DOOR ECU

Only Driver Door LOCK / UNLOCK Functions do not Operate

DESCRIPTION

The main body ECU receives lock/unlock switch signals and activates the door lock motor accordingly.

WIRING DIAGRAM

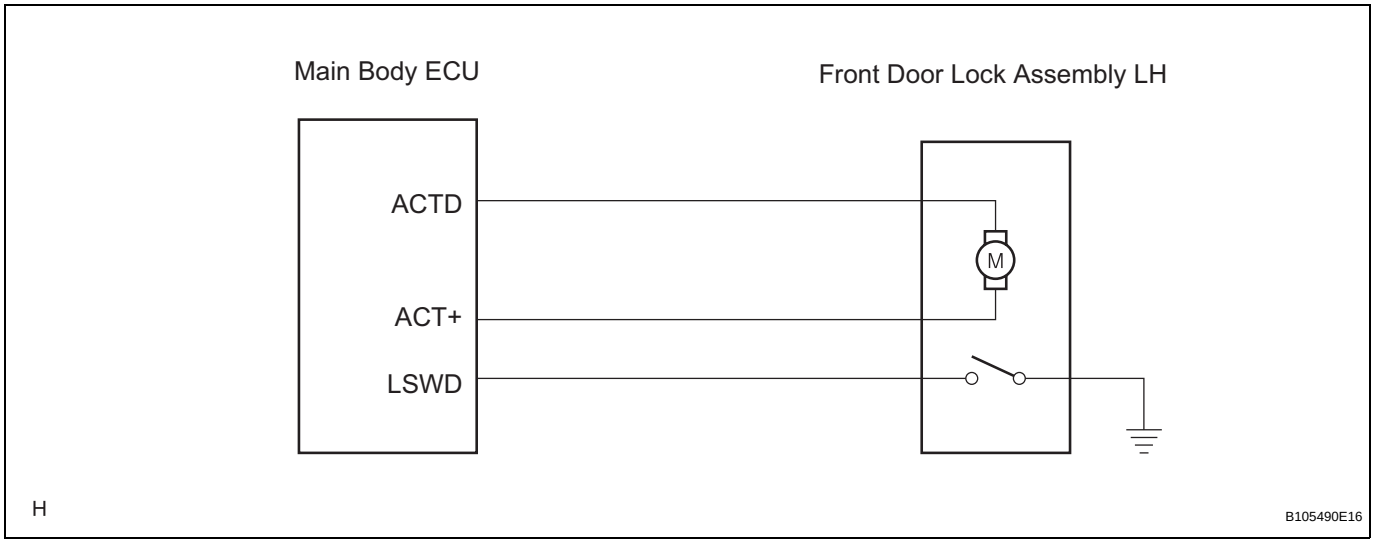

INSPECTION PROCEDURE

DL

1	INSPECT FRONT DOOR LOCK ASSEMBLY LH

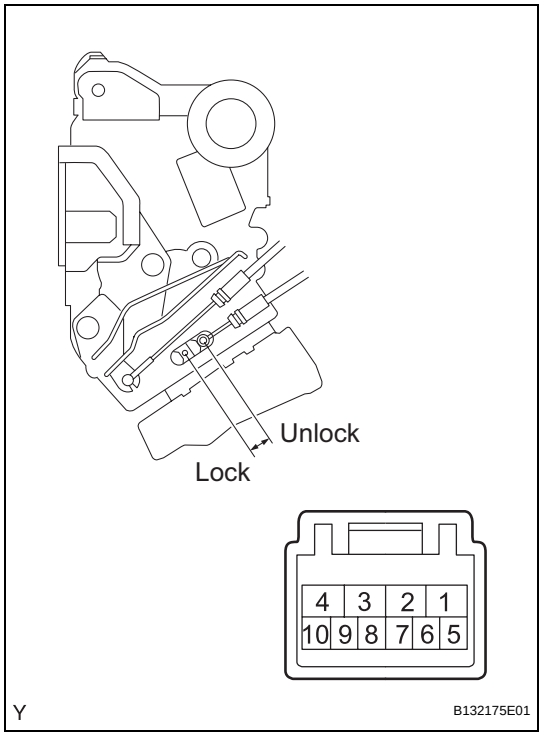

(a) Apply the battery voltage to the door lock motor and check the operation of the door lock motor.
Standard

Measurement Condition	Specified Condition
Battery positive (+) → Terminal 4 Battery negative(-) → Terminal 2	Locks
Battery positive (+) → Terminal 2 Battery negative(-) → Terminal 4	Unlocks

(b) Measure the resistance of the unlock detection switch.
Standard resistance

Tester Connection	Door Lock Condition	Specified Condition
7 - 8	Locked	10 kΩ or higher
7 - 8	Unlocked	Below 1 Ω

NG → **REPLACE FRONT DOOR LOCK ASSEMBLY LH**

OK

2	CHECK WIRE HARNESS AND CONNECTOR (MAIN BODY ECU - FRONT DOOR LOCK ASSEMBLY LH)

Wire Harness Side:

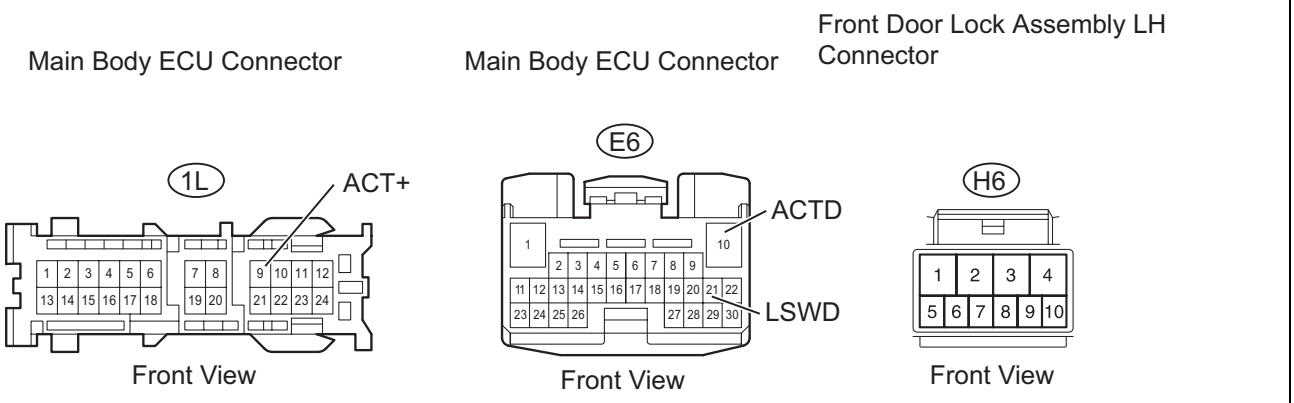

(a) Disconnect the E6 and 1L main body ECU connectors.
(b) Disconnect the H6 front door lock assembly LH connector.
(c) Measure the resistance.

Standard resistance

Tester Connection	Specified Condition
1L-9 (ACT+) - H6-4	Below 1 Ω
E6-10 (ACTD) - H6-1	Below 1 Ω
E6-21 (LSWD) - H6-8	Below 1 Ω
H6-7 - Body ground	Below 1 Ω
1L-9 (ACT+) or H6-4 - Body ground	10 kΩ or higher
E6-10 (ACTD) or H6-1 - Body ground	10 kΩ or higher
E6-21 (LSWD) or H6-8 - Body ground	10 kΩ or higher

(d) Reconnect the main body ECU connectors.
(e) Reconnect the front door lock assembly LH connector.

NG → **REPAIR OR REPLACE HARNESS OR CONNECTOR**

OK

REPLACE MAIN BODY ECU

DL

Only Passenger Door LOCK / UNLOCK Functions do not Operate

DESCRIPTION

The main body ECU receives lock/unlock switch signals and activates the door lock motor accordingly.

WIRING DIAGRAM

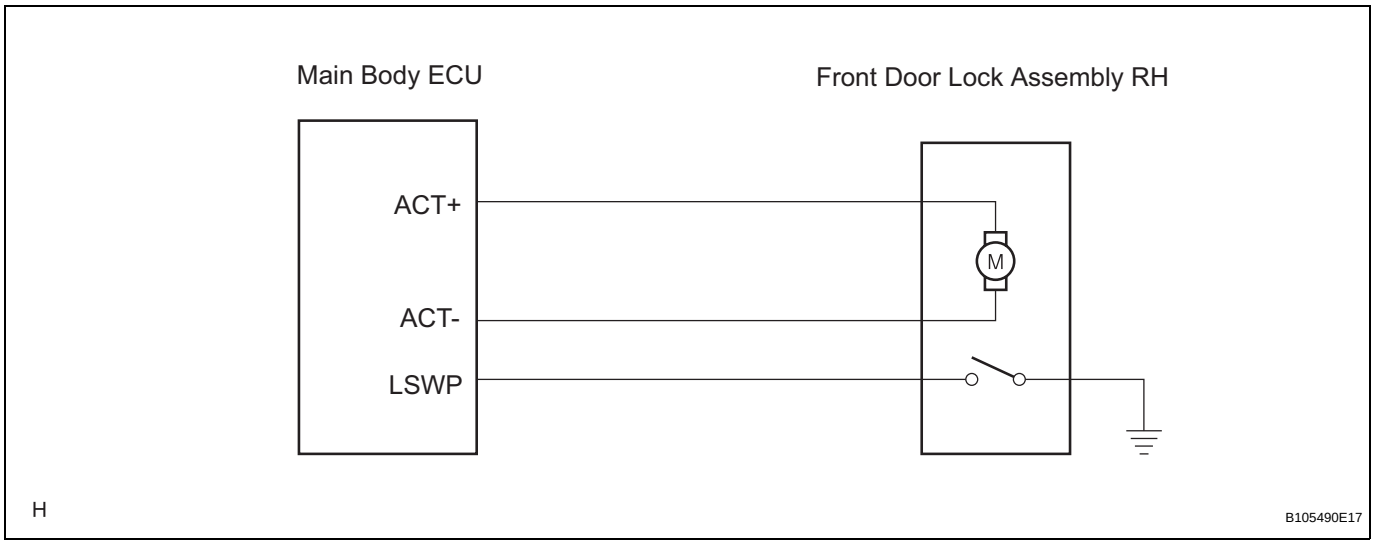

INSPECTION PROCEDURE

DL

1	INSPECT FRONT DOOR LOCK ASSEMBLY RH

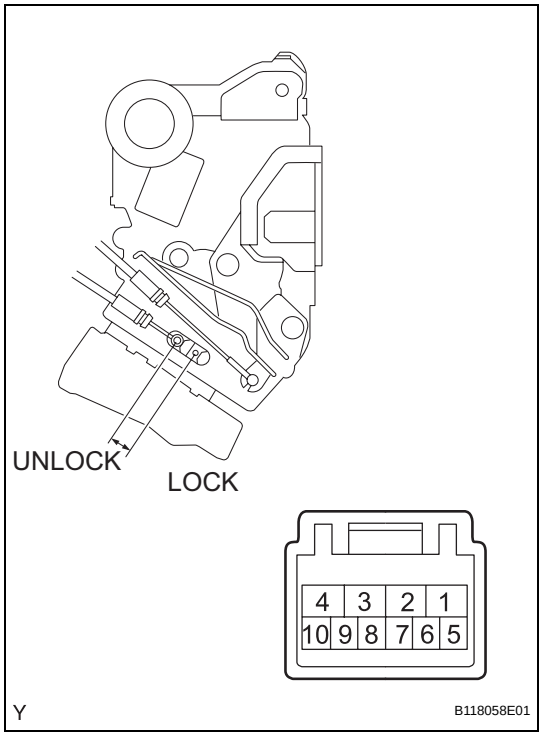

(a) Apply the battery voltage to the door lock motor and check the operation of the door lock motor.
Standard

Measurement Condition	Specified Condition
Battery positive (+) → Terminal 3 Battery negative(-) → Terminal 1	Locks
Battery positive (+) → Terminal 1 Battery negative(-) → Terminal 3	Unlocks

(b) Measure the resistance of the unlock detection switch.
Standard resistance

Tester Connection	Door Lock Condition	Specified Condition
7 - 8	Locked	10 kΩ or higher
7 - 8	Unlocked	Below 1 Ω

NG → **REPAIR OR REPLACE HARNESS OR CONNECTOR**

OK

2	**CHECK HARNESS AND CONNECTOR (MAIN BODY ECU - FRONT DOOR LOCK ASSEMBLY RH)**

Wire Harness Side:

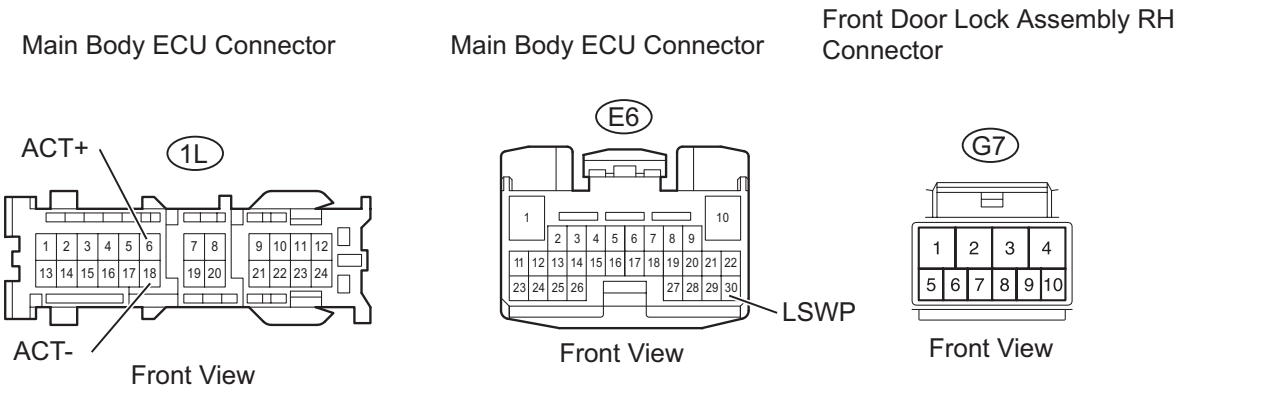

(a) Disconnect the 1L and E6 main body ECU connectors.
(b) Disconnect the G7 front door lock assembly RH connector.
(c) Measure the resistance.

Standard resistance

Tester Connection	Specified Condition
1L-6 (ACT+) - G7-4	Below 1 Ω
1L-18 (ACT-) - G7-1	Below 1 Ω
E6-30 (LSWP) - G7-7	Below 1 Ω
G7-8 - Body ground	Below 1 Ω
1L-6 (ACT+) or G7-4 - Body ground	10 kΩ or higher
1L-18 (ACT-) or G7-1 - Body ground	10 kΩ or higher
E6-30 (LSWP) or G7-7 - Body ground	10 kΩ or higher

(d) Reconnect the main body ECU connectors.
(e) Reconnect the front door lock assembly RH connector.

NG → **REPLACE FRONT DOOR LOCK ASSEMBLY RH**

OK

REPLACE MAIN BODY ECU

Only Back Door LOCK / UNLOCK Functions do not Operate

DESCRIPTION

The main body ECU receives lock/unlock switch signals and activates the door lock motor accordingly.

WIRING DIAGRAM

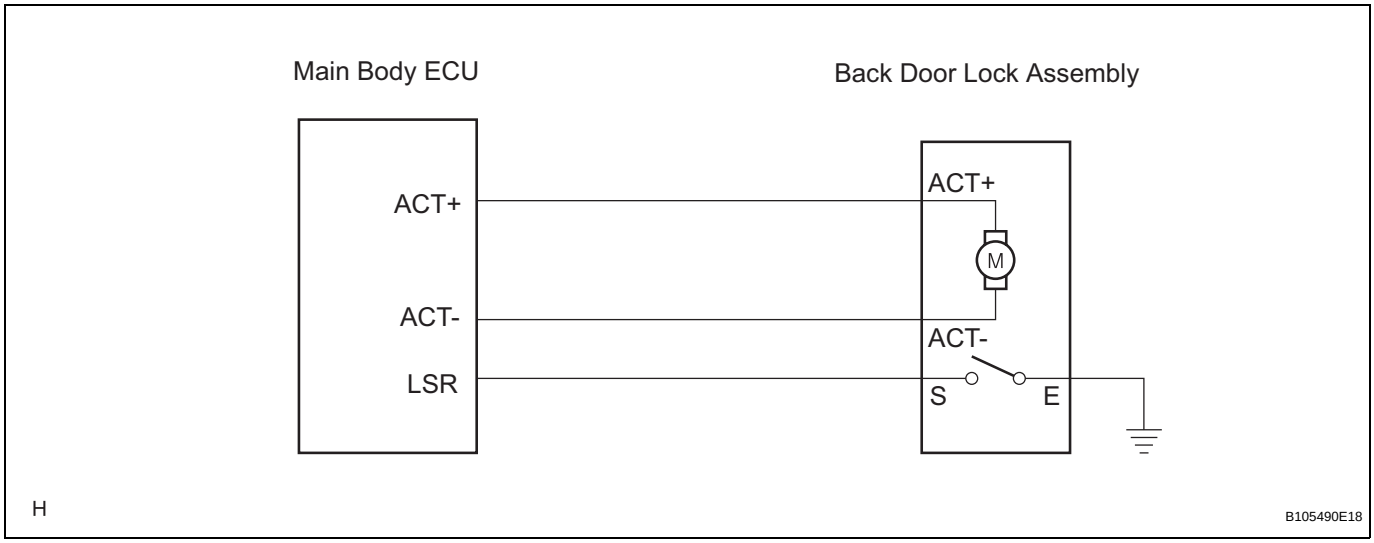

INSPECTION PROCEDURE

DL

1	INSPECT BACK DOOR LOCK ASSEMBLY

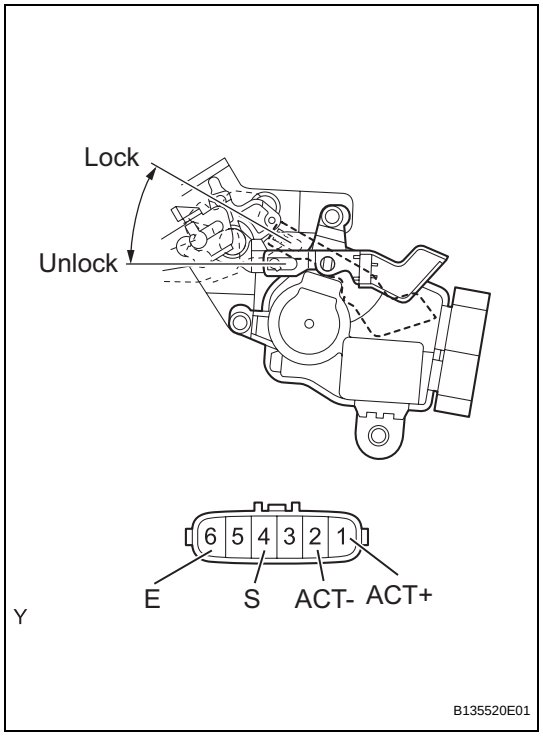

(a) Apply the battery voltage to the door lock motor and check the operation of the door lock motor.
Standard

Measurement Condition	Specified Condition
Battery positive (+) → Terminal 1 (ACT+) Battery negative(-) → Terminal 2 (ACT-)	Locks
Battery positive (+) → Terminal 2 (ACT-) Battery negative(-) → Terminal 1 (ACT+)	Unlocks

(b) Measure the resistance of the unlock detection switch.
Standard resistance

Tester Connection	Door Lock Condition	Specified Condition
4 (S) - 5 (E)	Locked	10 kΩ or higher
4 (S) - 5 (E)	Unlocked	Below 1 Ω

NG → **REPLACE BACK DOOR LOCK ASSEMBLY**

OK

2	CHECK HARNESS AND CONNECTOR (MAIN BODY ECU - BACK DOOR LOCK ASSEMBLY)

Wire Harness Side:

Main Body ECU Connector

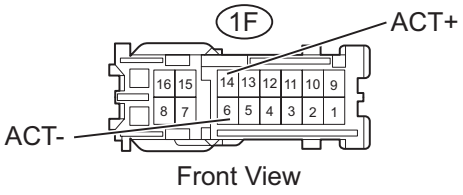

Back Door Lock Assembly Connector

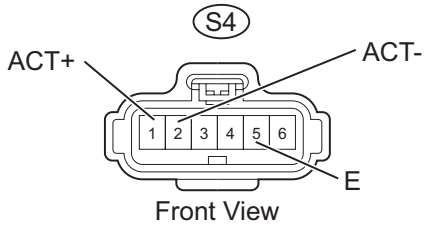

Y B138203E03

(a) Disconnect the 1F main body ECU connector.
(b) Disconnect the S4 back door lock assembly connector.
(c) Measure the resistance.

Standard resistance

Tester Connection	Specified Condition
1F-14 (ACT+) - S4-1 (ACT+)	Below 1 Ω
1F-6 (ACT-) - S4-2 (ACT-)	Below 1 Ω
S4-5 (E) - Body ground	Below 1 Ω
1F-14 (ACT+) or S4-1 (ACT+) - Body ground	10 kΩ or higher
1F-6 (ACT-) or S4-2 (ACT-) - Body ground	10 kΩ or higher

(d) Reconnect the main body ECU connector.
(e) Reconnect the back door lock assembly connector.

NG → **REPAIR OR REPLACE HARNESS OR CONNECTOR**

OK

REPLACE MAIN BODY ECU

DL

Key Lock-in Prevention Function does not Work Properly

DESCRIPTION

When the key is in the ignition key cylinder or the door courtesy light ON signal is output to the main body ECU, performing the door lock operation with the lock switch does not lock the doors.

WIRING DIAGRAM

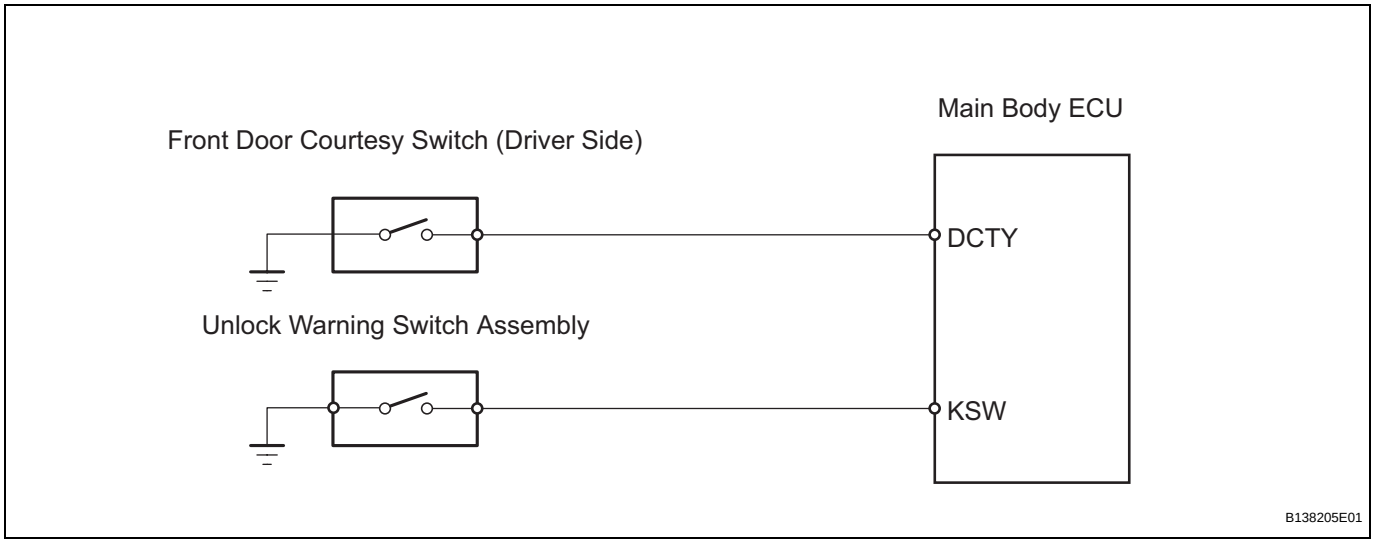

INSPECTION PROCEDURE

DL

1	READ VALUE OF INTELLIGENT TESTER (D DOR CTY SW)

(a) Use the DATA LIST to check the operation of the front door courtesy switch.

BODY

Item	Measurement Item / Display (Range)	Normal Condition	Diagnostic Note
D DOR CTY SW	Driver side door courtesy switch signal / ON or OFF	ON: Driver side door is open OFF: Driver side door is closed	-

OK:

The display is as specified in the normal condition.

NG → **Go to step 5**

OK

2	READ VALUE OF INTELLIGENT TESTER (KEY UNLK WRN SW)

(a) Use the DATA LIST to check the operation of the door unlock warning switch.

BODY

Item	Measurement Item / Display (Range)	Normal Condition	Diagnostic Note
KEY UNLK WRN SW	Unlock warning switch signal / ON or OFF	ON: Key is in ignition key cylinder OFF: No key is in ignition key cylinder	-

OK:

The display is as specified in the normal condition.

NG → **REPLACE MAIN BODY ECU**

OK

3 INSPECT UNLOCK WARNING SWITCH ASSEMBLY

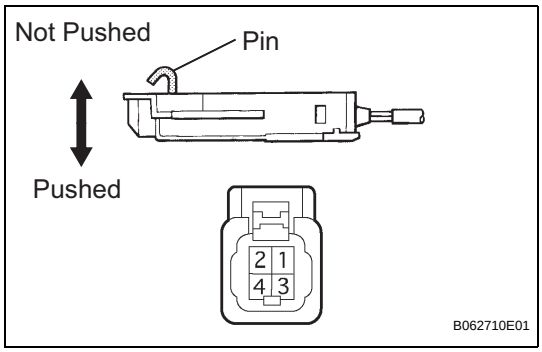

(a) Remove the unlock warning switch assembly.

(b) Measure the resistance.

Standard resistance

Tester Connection	Condition	Specified Condition
1 - 2	Not pushed	10 kΩor higher
1 - 2	Pushed	Below 1 Ω

NG → **REPLACE UNLOCK WARNING SWITCH ASSEMBLY**

OK

DL

4 CHECK HARNESS AND CONNECTOR (UNLOCK WARNING SWITCH ASSEMBLY - MAIN BODY ECU)

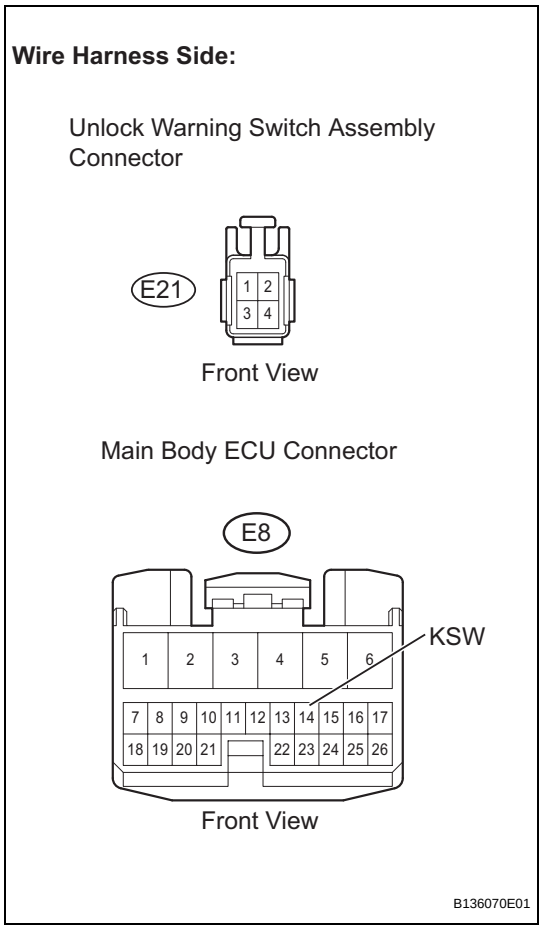

(a) Disconnect the E21 unlock warning switch assembly connector.
(b) Disconnect the E8 main body ECU connector.
(c) Measure the resistance.

Standard resistance

Tester Connection	Specified Condition
E21-1 - E8-14 (KSW)	Below 1 Ω
E21-1 or E8-14 (KSW) - Body ground	10 kΩor higher
E21-2 - Body ground	Below 1 Ω

(d) Reconnect the unlock warning switch connector.
(e) Reconnect the main body ECU connector.

NG → **REPAIR OR REPLACE HARNESS OR CONNECTOR**

OK

REPLACE MAIN BODY ECU

5 INSPECT FRONT DOOR COURTESY SWITCH ASSEMBLY (DRIVER SIDE)

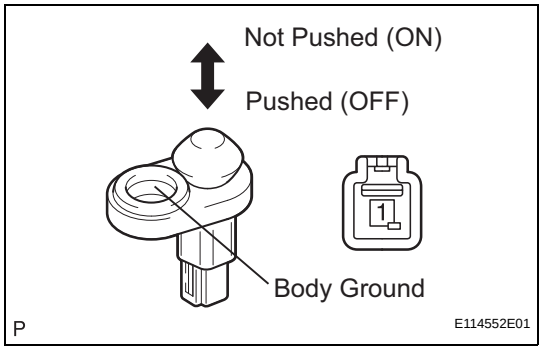

(a) Remove the front door courtesy switch (driver side).
(b) Measure the resistance.

Standard resistance

Tester Connection	Condition	Specified Condition
1 - Body ground	Not pushed (ON)	Below 1 Ω
1 - Body ground	Pushed (OFF)	10 kΩor higher

(c) Reinstall the front door courtesy switch (driver side).

NG → **REPLACE FRONT DOOR COURTESY SWITCH ASSEMBLY (DRIVER SIDE)**

OK

DL

6	CHECK HARNESS AND CONNECTOR (FRONT DOOR COURTESY SWITCH (DRIVER SIDE) - MAIN BODY ECU)

Wire Harness Side:

Front Door Courtesy Switch Connector (Driver Side)

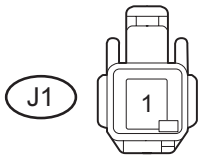

Front View

Main Body ECU Connector

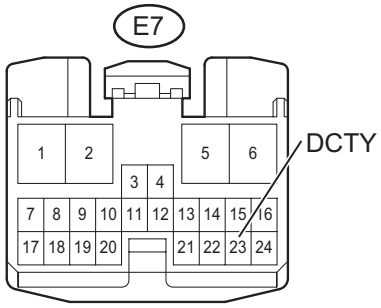

Front View

B136069E01

(a) Disconnect the J1 front door courtesy switch (driver side) connector.
(b) Disconnect the E7 main body ECU connector.
(c) Measure the resistance.
Standard resistance

Tester Connection	Specified Condition
J1-1 - E7-23 (DCTY)	Below 1 Ω
J1-1 or E7-23 (DCTY) - Body ground	10 kΩor higher

(d) Reconnect the front door courtesy switch connector.
(e) Reconnect the main body ECU connector.

NG → **REPAIR OR REPLACE HARNESS OR CONNECTOR**

OK

REPLACE MAIN BODY ECU

DL

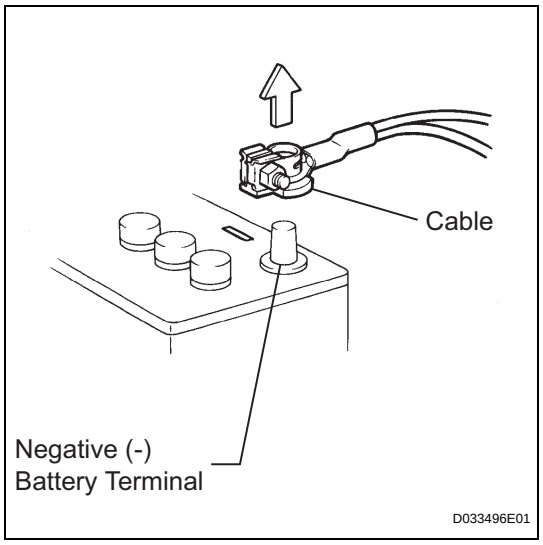

WIRELESS DOOR LOCK CONTROL SYSTEM

PRECAUTION

1. DISCONNECT AND RECONNECT CABLE OF NEGATIVE BATTERY TERMINAL

(a) Before performing electronic work, disconnect the cable from the negative (-) battery terminal in order to prevent it from shorting and burning out.

(b) Before disconnecting and reconnecting the battery cable, turn the ignition switch OFF and the headlight dimmer switch OFF. Then loosen the terminal nut completely. Do not damage the cable or terminal.

(c) When the battery cable is disconnected, the clock and radio settings and stored DTCs are erased. Therefore, before disconnecting the battery cable, make a notes of them.

NOTICE:

When the cable is disconnected from the negative (-) battery terminal, initialize the following system(s) after the cable is reconnected.

System name	See procedure
METER / GAUGE SYSTEM	ME-10

PARTS LOCATION

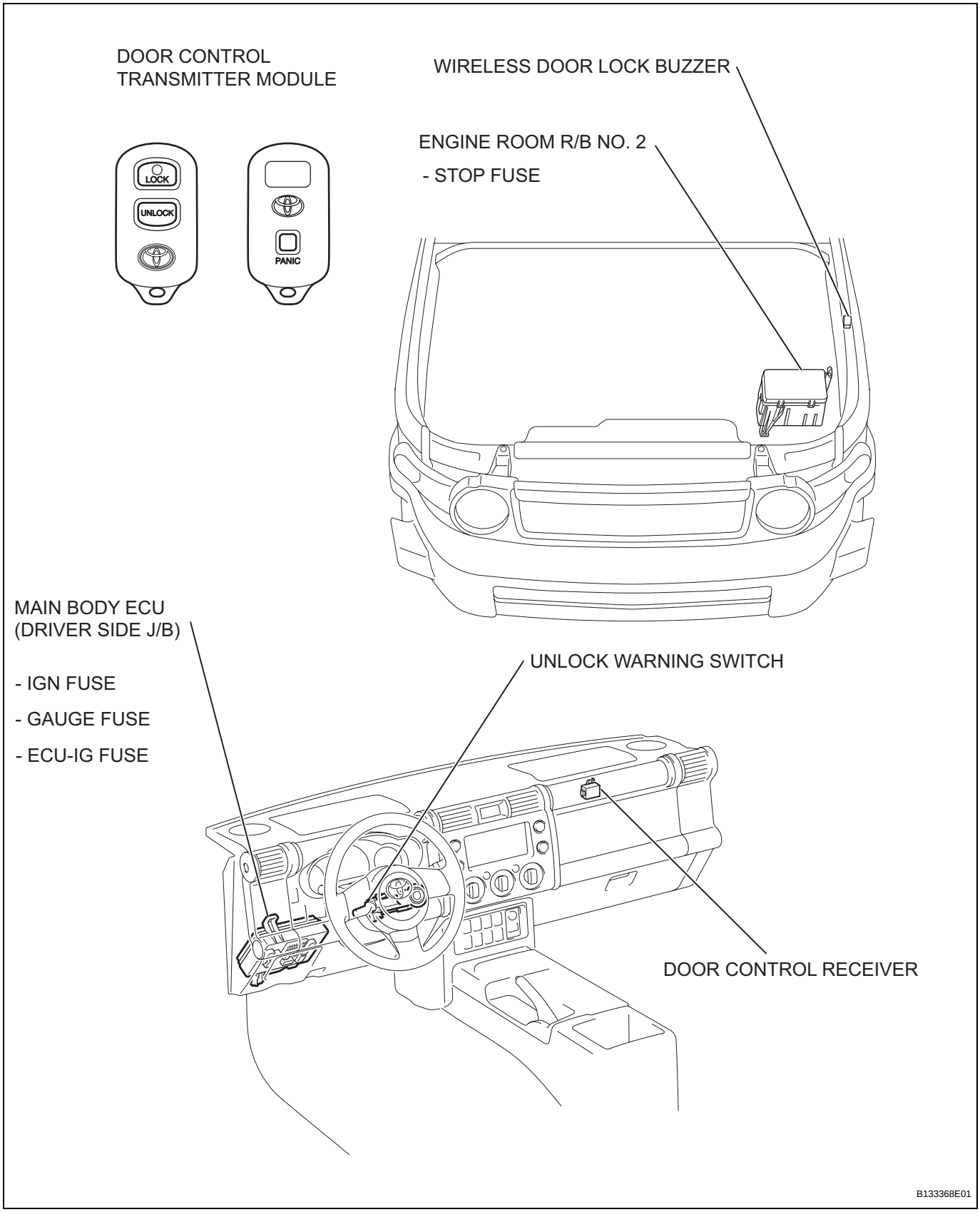

DL

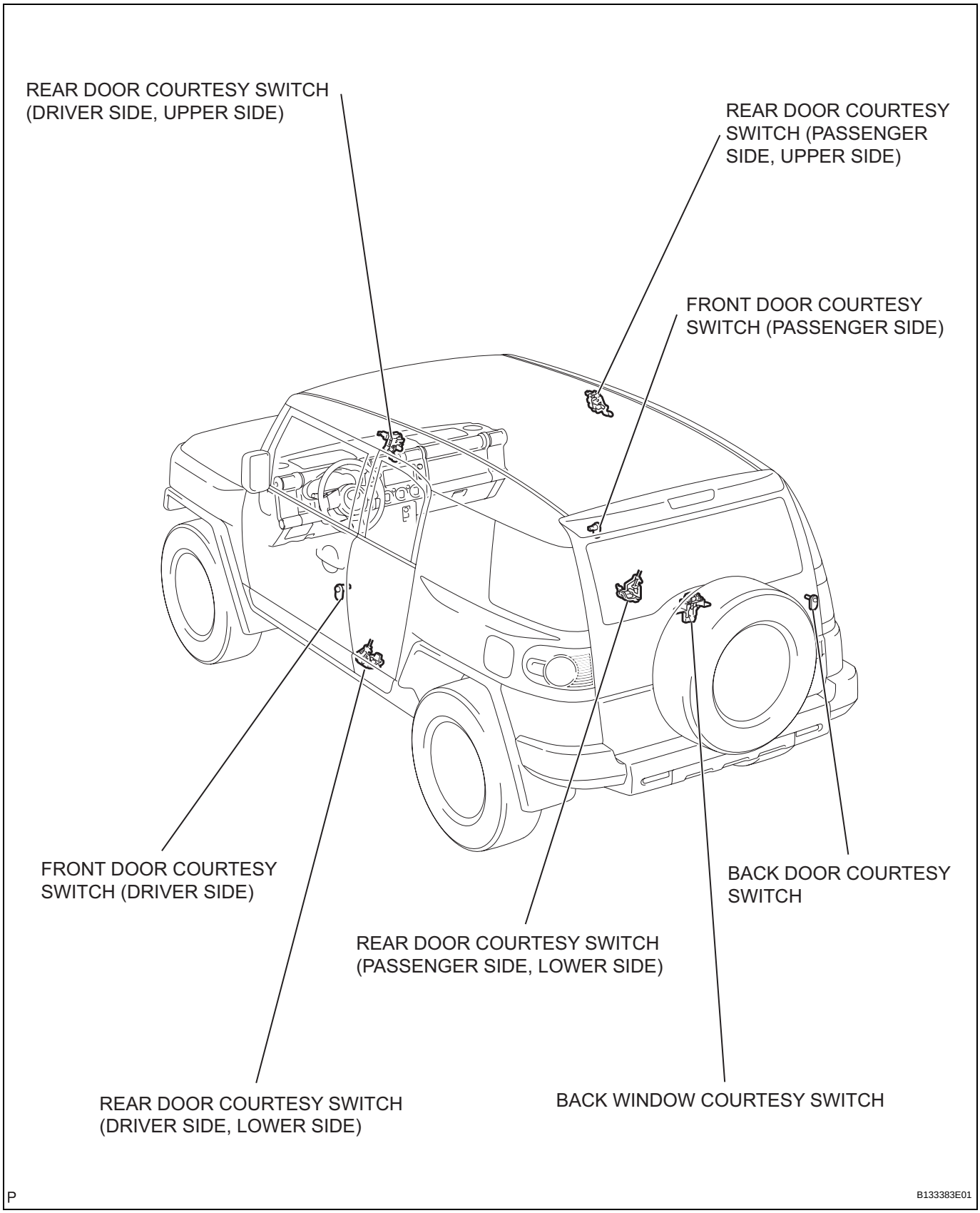
REAR DOOR COURTESY SWITCH (DRIVER SIDE, UPPER SIDE)
REAR DOOR COURTESY SWITCH (PASSENGER SIDE, UPPER SIDE)
FRONT DOOR COURTESY SWITCH (PASSENGER SIDE)
FRONT DOOR COURTESY SWITCH (DRIVER SIDE)
BACK DOOR COURTESY SWITCH
REAR DOOR COURTESY SWITCH (PASSENGER SIDE, LOWER SIDE)
REAR DOOR COURTESY SWITCH (DRIVER SIDE, LOWER SIDE)
BACK WINDOW COURTESY SWITCH
P
B133383E01

DL

SYSTEM DIAGRAM

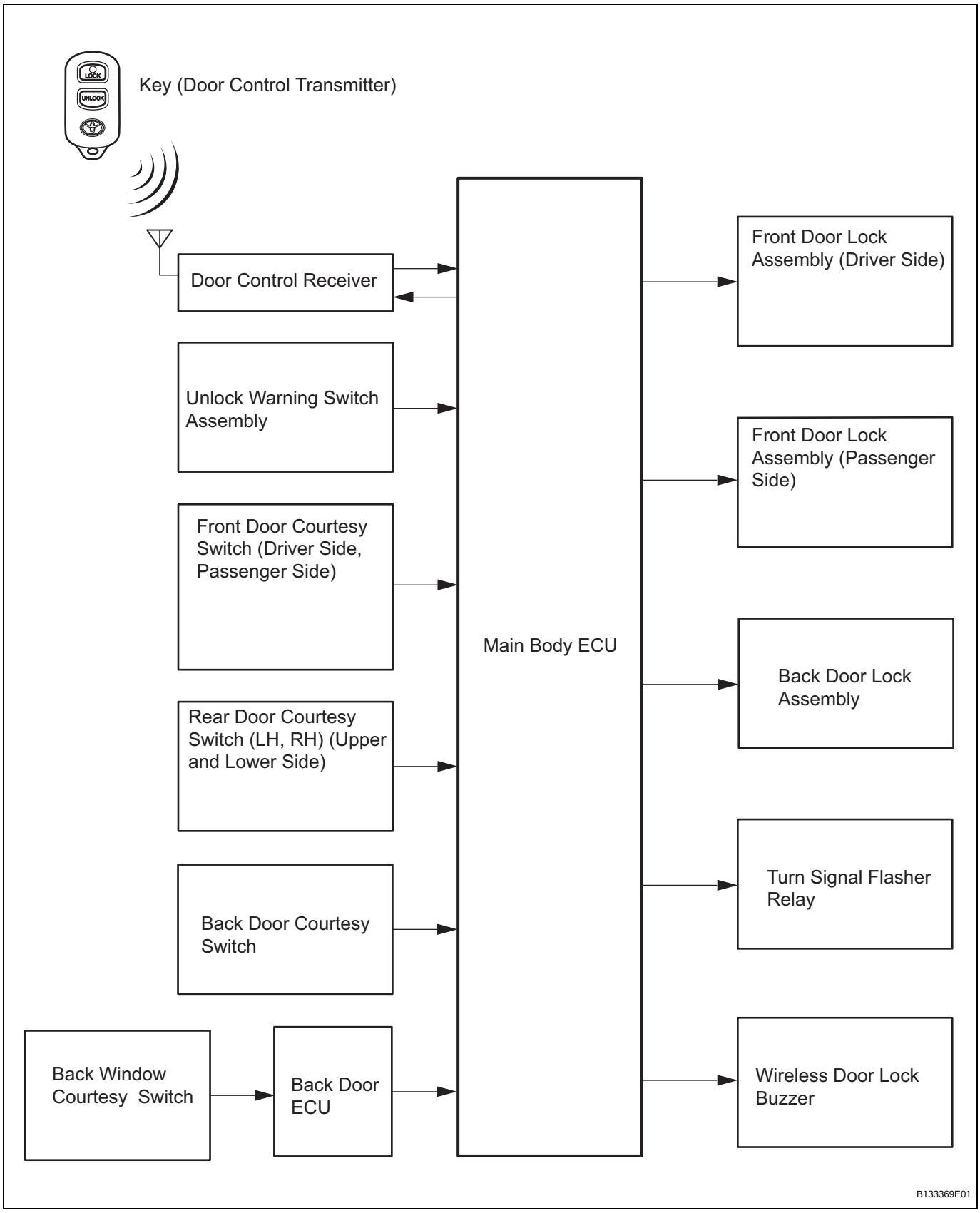

SYSTEM DESCRIPTION

1. WIRELESS DOOR CONTROL SYSTEM DESCRIPTION

(a) This system locks and unlocks the vehicle's doors remotely. The wireless control system has the following features:

- The door control receiver performs the code identification procedure and the main body ECU operates the door lock control. A serial data link is provided for communication between the receiver and main body ECU.
- A key-integrated type transmitter is used and it contains the following 3 switches: the door lock switch, door unlock switch and panic switch.

2. FUNCTION OF MAIN COMPONENTS

Components	Functions
Door control transmitter	• Contains LOCK and UNLOCK switches • Transmits faint electric waves (recognition codes and function codes) to door control receiver
Door control receiver	Receives weak electric waves (recognition codes and function codes) from door control transmitter, and changes waves to code data
Door lock position switch	Transmits door lock conditions of each door to main body ECU
Unlock warning switch assembly	Detects if key is in ignition key cylinder
Front door courtesy switch assembly Rear door courtesy switch assembly Back door courtesy switch assembly Back window courtesy switch assembly	Turns ON when door is open and turns OFF when door is closed. Outputs door status (open or closed) to main body ECU.

3. SYSTEM FUNCTION

(a) Door lock / unlock function:

With no key in the ignition key cylinder (unlock warning switch is OFF) and all door courtesy switches OFF, pressing the door control transmitter's LOCK / UNLOCK switch causes the transmitter to output faint electric waves. The transmitter sends the faint electrical wave to the door control receiver. The high frequency circuit built into the door control receiver demodulates the wave into code data, computes the data, and compares the data with previously registered ID codes. If the data is verified, a door lock / unlock request signal is output to the main body ECU. When the request signal is received, the main body ECU outputs a door lock / unlock control signal to each door lock assembly. Each door lock assembly then locks / unlocks its respective door and turns ON / OFF its door lock position switch in accordance with the signal.

(b) Answer-back function:
The main body ECU receives the door unlock detection switch's ON / OFF signals and uses these signals to confirm if the door control operation has been completed. The main body ECU then outputs the hazard warning light control signals to flash the hazard warning lights and the wireless door lock buzzer control signals to sound the wireless door lock buzzer as an answer-back indication.

(c) The wireless door lock control system has the following functions.

Function	Outline
All door lock function	Pressing LOCK switch locks all doors
All door unlock function	Pressing 2 times UNLOCK switch unlocks all doors
Answer-back function	Hazard warning lights flash once and wireless door lock buzzer sounds once when doors are locked, and hazard warning lights flash twice and wireless door lock buzzer sounds twice when doors are unlocked to indicate that operation has been completed
Automatic locking function	If no doors are opened within 60 seconds of being unlocked by wireless transmitter, all doors are locked again automatically
Illuminated entry function	If locked doors are unlocked through wireless operation, dome light illuminate. If one of following situations occurs, lights fade out: • Within 15 seconds, doors are not opened and doors are locked through wireless operation • Within 15 seconds, key is inserted into ignition key cylinder and ignition switch is turned ON • No operations or actions are performed within 15 seconds
Panic alarm function	Pressing PANIC switch for more than 1 second sounds horn
Security function	Sends signal as rolling code
Transmitter recognition code registration function	Enables 4 modes for registering (writing and storing) transmitter recognition codes in EEPROM, built into door control receiver

HOW TO PROCEED WITH TROUBLESHOOTING

HINT:

- The wireless door lock control system troubleshooting procedures are based on the premise that the power door lock system is operating normally. Check the power door lock system first before troubleshooting the wireless door lock control system.
- Use these procedures to troubleshoot the wireless door lock control system.
- *: Use the intelligent tester.

1 VEHICLE BROUGHT TO WORKSHOP

NEXT

2 INSPECT BATTERY VOLTAGE

Standard voltage:
11 to 14 V

If the voltage is below 11 V, recharge or replace the battery before proceeding.

NEXT

3 INSPECT COMMUNICATION FUNCTION OF CAN COMMUNICATION SYSTEM*

(a) Use the intelligent tester to check if the CAN Communication System is functioning normally.
Result:

Result	Proceed to
DTC is not output	A
DTC is output	B

B → **GO TO DIAGNOSTIC TROUBLE CODE CHART**

A

4 PROBLEM SYMPTOMS TABLE

Result:

Result	Proceed to
Fault is not listed in problem symptoms table	A
Fault is listed in problem symptoms table	B

B → **Go to step 6**

A

5	OVERALL ANALYSIS AND TROUBLESHOOTING*

(a) Terminals of ECU (see page DL-48)
(b) Data List / Active Test (see page DL-54)
(c) On-vehicle Inspection (see page DL-54)

NEXT

6	REPAIR OR REPLACE

NEXT

7	CONFIRMATION TEST

NEXT

END

CUSTOMIZE PARAMETERS

1. CUSTOMIZING FUNCTION WITH INTELLIGENT TESTER (REFERENCE)

HINT:

The following items can be customized.

NOTICE:

- **When the customer requests a change in a function, first make sure that the function can be customized.**
- **Record the current settings before customizing.**
- **When troubleshooting a function, first make sure that the function is set to the default setting.**

Wireless Door Lock Control System

Display (Item)	Default	Contents	Setting
HAZARD ANS BACK	ON	When wireless lock switch on transmitter pressed, illuminates all hazard warning lights once. When unlock switch pressed, all hazard warning lights illuminate twice	ON / OFF
WIRELESS OPER	ON	ON /OFF of wireless door lock function	ON / OFF
ALARM FUNCTION	ON	Operates security alarm when panic switch on transmitter continuously pressed for 1 second	ON / OFF
UNLOCK/2 OPER	ON	Function that unlocks driver side door when unlock switch on transmitter is pressed once, and unlocks all doors when pressed twice. If setting is OFF, pressing unlock switch once makes all doors unlock.	ON / OFF
AUTO LOCK DELAY	30 seconds	Time until relocking after unlocking with wireless door lock function	60 seconds / 30 seconds
OPEN DOOR WARN	ON	If a door is not completely closed and LOCK is pressed, this function sounds a buzzer for 10 seconds	ON / OFF
WIRELS BUZZ VOL	MID2	To adjust the volume of the wireless buzzer	OFF / MIN / MID1/ MID2 /MID3 / MAX

PROBLEM SYMPTOMS TABLE

HINT:
Use the table below to help determine the causes of the problem symptom. The potential cases of the symptoms are listed in order of probability in the "Suspected Area" column of the table. Check each symptom by checking the suspected areas in the order they are listed. Replace parts as necessary.

Wireless Door Lock Control System

Symptom	Suspected area	See page
Only wireless control function inoperative	Transmitter battery	DL-81
	Door control transmitter	DL-88
	Door control receiver	-
	Wire harness	-
	Main body ECU	-
No answer-back	Lighting system	LI-38
	Wireless door lock buzzer	DL-121
	Wire harness	-
	Main body ECU	-

TERMINALS OF ECU

1. CHECK MAIN BODY ECU

Main Body ECU:

Left View:

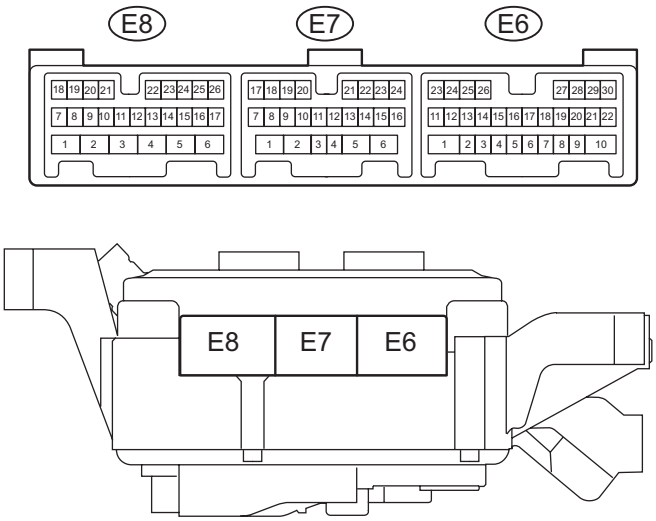

Rear View:

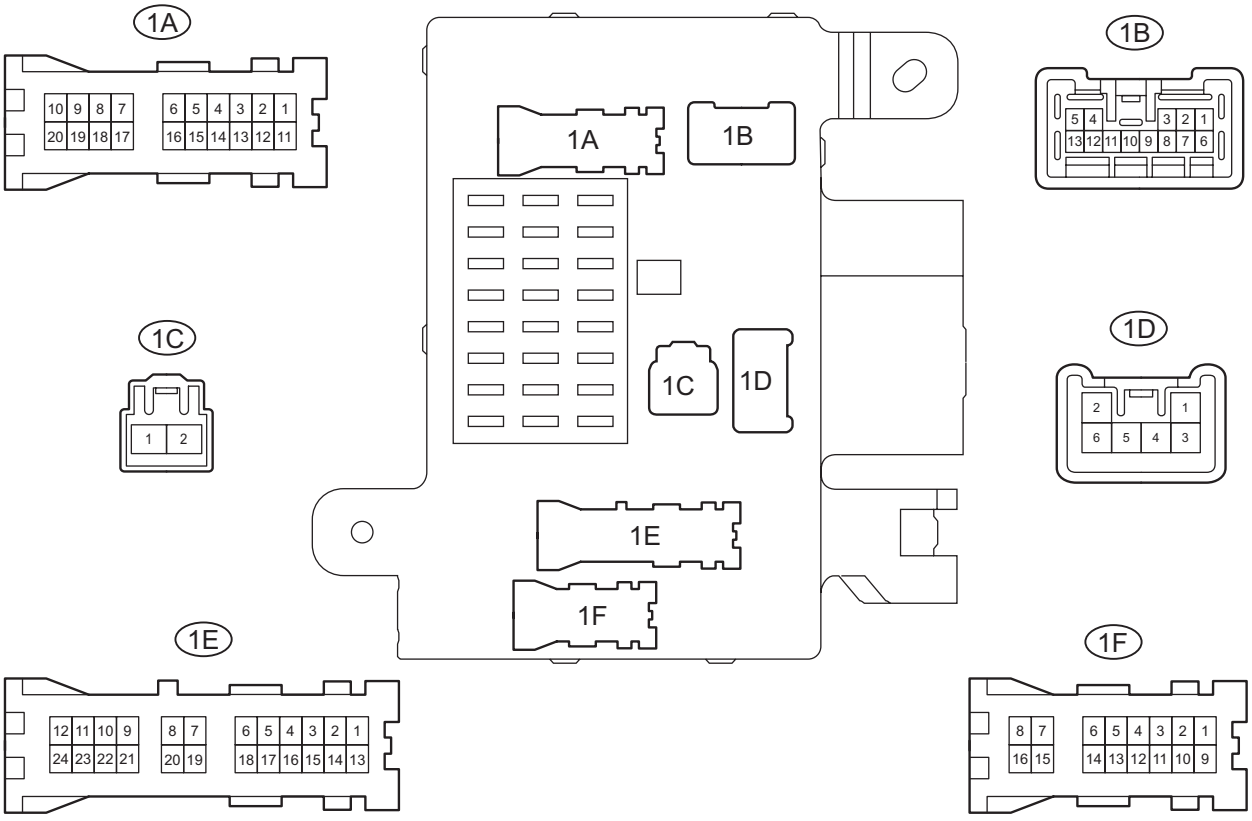

Y

B136051E01

Main Body ECU:

Front View:

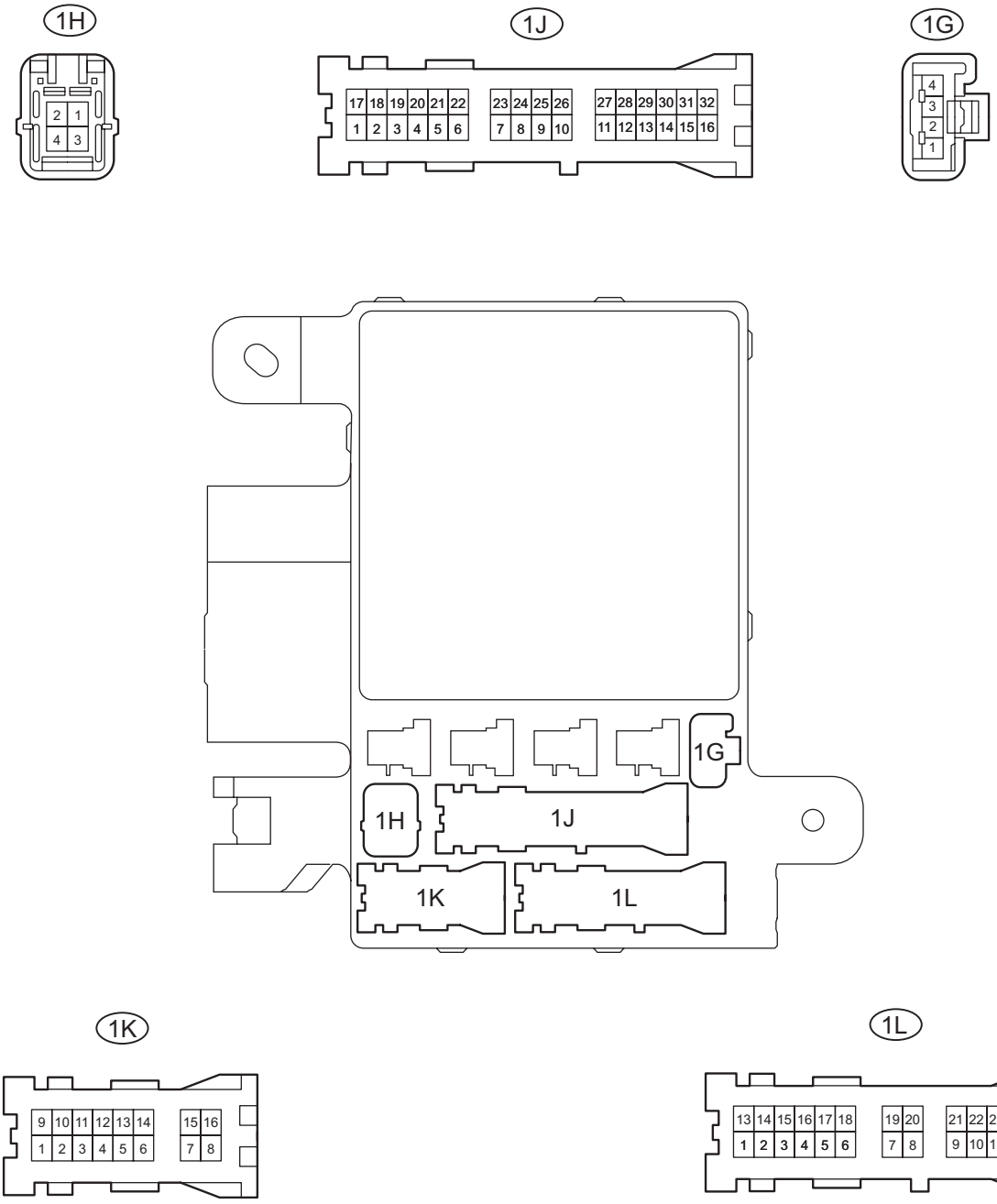

Y

B136052E01

(a) Disconnect the main body ECU connectors.

(b) Measure the voltages of the wire harness side connectors.

Standard voltage:

Symbols (Terminal No.)	Wiring Color	Terminal Description	Condition	Specified Condition
GND1 (1H-2) - Body ground	W-B - Body ground	Ground	Always	Below 1V
BECU (1B-4) - Body ground	W-R - Body ground	Power source circuit (From battery)	Always	11 to 14 V
BDR1 (1E-9) - Body ground	B-Y - Body ground	Power source circuit (From battery)	Always	11 to 14 V
GND2 (1H-2) - Body ground)	W-B - Body ground	Ground	Always	Below 1V

If the result is not as specified, there may be a malfunction in the wire harness.

(c) Reconnect the main body ECU connectors.

(d) Measure the voltage of the wire harness side connectors.

Standard voltage:

Symbols (Terminal No.)	Wiring Color	Terminal Description	Condition	Specified Condition
KSW (E8-14) - Body ground	G-Y - Body ground	Key unlock warning switch input	Key inserted → Key removed from ignition key cylinder	Below 1 V → 11 to 14 V
BCTY (E7-7) - Body ground	W - Body ground	Back door courtesy switch and back window courtesy switch input	Back door or back window is open	Below 1V
			Back door and back window are closed	11 to 14 V
RLCY (E7-11) - Body ground	P-B - Body ground	Rear LH door courtesy switch input	Rear LH door open	Below 1V
			Rear LH door closed	11 to 14 V
RRCY (E7-12) - Body ground	P-L - Body ground	Rear RH door courtesy switch input	Rear RH door open	Below 1V
			Rear RH door closed	11 to 14 V
DCTY (E7-23) - Body ground	R-B - Body ground	Driver door courtesy switch input	Driver door open	Below 1V
			Driver door closed	11 to 14 V
PCTY (E7-24) - Body ground	G-Y - Body ground	Front passenger door courtesy switch input	Front passenger door open	Below 1V
			Front passenger door closed	11 to 14 V
PRG (E7-3) - Body ground	G-O - Body ground	Door control receiver output	Transmitter switch ON → OFF (No key in ignition key cylinder, all doors closed)	11 to 14 V → Pulse generation → 11 to 14 V
RDA (E7-4) - Body ground	L-R - Body ground	Door control receiver input	Transmitter switch ON → OFF (No key in ignition key cylinder, all doors closed)	Below 1V → Pulse generation → Below 1V
HAZ (1J-14) - Body ground	W - Body ground	Hazard warning light signal	Answer-back OFF → ON	Pulse generation
BZR (1B-10) - BZR2 (1B-6)	P-B - Y-B	Wireless door lock buzzer signal	Wireless door lock buzzer OFF → ON	Pulse generation

If the result is not as specified, there may be a malfunction in the wire harness.

2. CHECK DOOR CONTROL RECEIVER

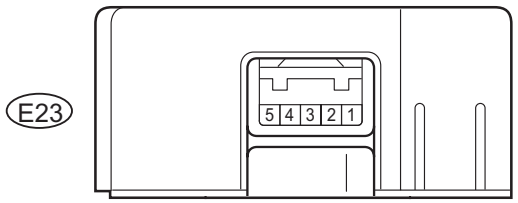

B133370E01

(a) Disconnect the door control receiver connector.
(b) Measure the voltage and resistance of the wire harness side connector.

Standard:

Symbols (Terminal No.)	Wiring Color	Terminal Description	Condition	Specified Condition
+B (E23-5) - GND (E23-1)	R - W-B	Battery (power supply)	Always	11 to 14 V
GND (E23-1) - Body ground	W-B - Body ground	Ground	Always	Below 1 Ω

If the result is not as specified, there may be a malfunction in the wire harness.

(c) Reconnect the door control receiver connector.
(d) Measure the voltage of the wire harness side connector.

DL

Standard voltage:

Symbols (Terminal No.)	Wiring Color	Terminal Description	Condition	Specified Condition
PRG (E23-3) - Body ground	G-O - Body ground	Door control receiver output	Transmitter switch ON → OFF (No key in ignition key cylinder, all doors closed)	11 to 14 V → Pulse generation → 11 to 14 V
RDA (E23-2) - Body ground	L-R - Body ground	Door control receiver input	Transmitter switch ON → OFF (No key in ignition key cylinder, all doors closed)	Below 1V → Pulse generation → Below 1V

If the result is not as specified, there may be a malfunction in the wire harness.

DTC CHECK / CLEAR

1. SELF-DIAGNOSTIC MODE (OPERATING IGNITION KEY CYLINDER)

(a) Switch to self-diagnostic mode.

(1) Establish the vehicle's initial condition.

(2) Insert the key into the ignition key cylinder and remove it.

(3) Within 5 seconds of removing the key, insert it into the ignition key cylinder again.

(4) Turn the ignition switch ON and then OFF.

(5) Within 30 seconds of turning the ignition switch OFF, perform the following operation 9 more times: Turn the ignition switch ON and then OFF.

HINT:

- Turning the ignition switch ON after the procedure above has been completed ends self-diagnostic mode.
- Do not lock or unlock doors while in self-diagnostic mode.

NOTICE:

If the system cannot enter self-diagnostic mode, the system returns to normal mode.

(b) Check that the system has switched to self-diagnostic mode by checking the wireless door lock buzzer sound.

Buzzer Output:

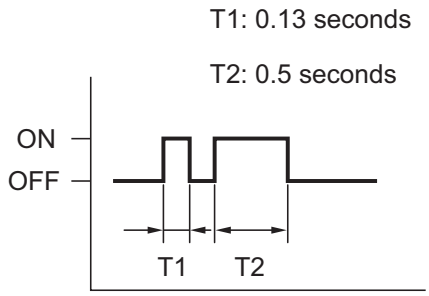

N B110075E18

DL

(c) Check the diagnostic outputs when the door control transmitter switch is held down. The diagnostic outputs can be checked by the wireless door lock buzzer sound.

Buzzer Output:

Normal Wave (LOCK Switch):

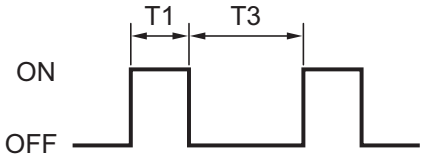

Mismatched Recognition Code:

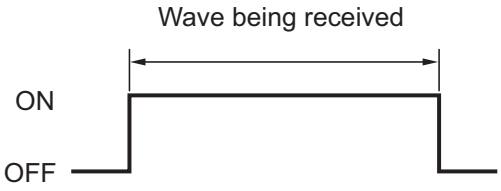

Normal Wave (UNLOCK Switch):

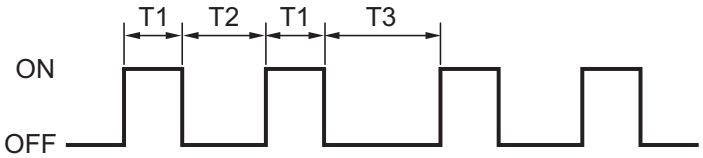

No Diagnosis Output:



Normal Wave (PANIC Switch):

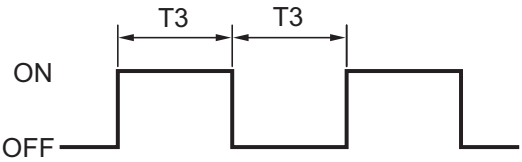

T1: 0.13 seconds

T2: 0.25 seconds

T3: 0.50 seconds

B133371E01

2. SELF-DIAGNOSTIC MODE (USING INTELLIGENT TESTER)

(a) Switch to self-diagnostic mode.
(1) Connect the intelligent tester to the DLC3.
(2) Turn the ignition switch ON and turn the intelligent tester main switch on.
HINT:
Refer to the intelligent tester operator's manual for further details.

DATA LIST / ACTIVE TEST

1. READ DATA LIST

HINT:

Using the intelligent tester's DATA LIST allows switch, sensor, actuator and other item values to be read without removing any parts. Reading the DATA LIST early in troubleshooting is one way to save time.

(a) Connect the intelligent tester to the DLC3.
(b) Turn the ignition switch ON.
(c) Read the DATA LIST in accordance with the display on the tester.

BODY:

Item	Measurement Item/Display (Range)	Normal Condition	Diagnostic Note
D DOR CTY SW	Driver door courtesy switch signal/ON or OFF	ON :Driver door open OFF: Driver door closed	-
P DOR CTY SW	Front passenger door courtesy switch signal/ON or OFF	ON: Front passenger door open OFF: Front passenger door closed	-
Rr DOR CTY SW	Rear door courtesy switch signal/ ON or OFF	ON: Either right or left rear door open OFF: Both the right and left rear doors are closed	-
LUGG COURTSY SW	Back door and back window courtesy switch signal/ON or OFF	ON: Either back door or back window open OFF: Both the back door and back window are closed	-
KEY UNLK WRN SW	Unlock warning switch / ON or OFF	ON: Ignition key is inserted OFF: Ignition key is not inserted	-

DL

2. PERFORM ACTIVE TEST

HINT:

Performing the intelligent tester's ACTIVE TEST allows relays, VSV, actuators and other items to be operated without removing any parts. Performing the ACTIVE TEST early in troubleshooting is one way to save time. The DATA LIST can be displayed during the ACTIVE TEST.

(a) Connect the intelligent tester to the DLC3.
(b) Turn the ignition switch ON.
(c) Perform the ACTIVE TEST in accordance with the display on the tester.

BODY:

Item	Test Details	Diagnostic Note
BUZZ CONT SOUND	Wireless door lock buzzer (continuous) ON/ OFF	-
BUZZ RESP SOUND	Wireless door lock buzzer (beep) ON/OFF	-
HAZARD	Turns turn signal flasher relay ON / OFF	-

ON-VEHICLE INSPECTION

1. NOTICES WHEN CHECKING

(a) Wireless door LOCK / UNLOCK function:
This function operates only when the vehicle is in its initial condition (the following 3 conditions are met).
(1) No key is inserted into the ignition key cylinder.
(2) All the doors are closed.
(3) The power door lock system is functioning normally.
HINT:
- The UNLOCK function operates even when one of the doors is open.
- The UNLOCK function operates even when the key is inserted into the ignition key cylinder. However, the ignition switch must be OFF.

(b) The operating range differs depending on the situation.
(1) The operating range differs depending on the user, the way the transmitter is held and the location.
(2) In certain areas, the operating range will be reduced due to the vehicle body shape and the influence of the surrounding environment.
(3) The transmitter's faint electric waves may be affected if the area has strong electric waves or noise. The transmitter's operating range may be reduced or the transmitter may not function.
(4) When the battery weakens, the operating range is reduced or the transmitter may not function.
HINT:
If the transmitter has had prolonged exposure to direct sunlight, such as being left on the instrument panel, the battery may weaken or other problems may occur.

DL

2. CHECK WIRELESS DOOR LOCK CONTROL FUNCTIONS

HINT:
- The switches described below transmit signals and are built into the door control transmitter.
- The transmitter's operating range must be taken into account while checks are being made.

(a) Make sure the vehicle is in a condition in which the wireless control functions can be operated (see above).

(b) Check the chattering prevention function.
  (1) When a switch is pressed, check that the corresponding operation occurs only once. When the switch is held down, check that the corresponding operation occurs only once and does not repeatedly activate. Lastly, when the switch is pressed at 1 second intervals, check that the corresponding operation activates once for each press of the switch.

(c) Check the automatic locking function.
  (1) When all doors are unlocked with the UNLOCK switch and none of the doors are opened or locked within 60 seconds, check that the doors are relocked automatically.

(d) Check the switch operation fail-safe function.
  (1) If the key is in the ignition key cylinder, check that the doors cannot be locked by the LOCK switch. However, this does not apply when the system is in recognition code registration mode.

(e) Check the answer-back function.
  (1) When the LOCK switch is pressed, check that the hazard warning lights flash once, the wireless door lock buzzer sounds once and all doors are locked.
  (2) When the UNLOCK switch is pressed, check that the hazard warning lights flash twice, the wireless door lock buzzer sounds twice and all doors are unlocked.

Only Wireless Control Function is Inoperative

DESCRIPTION

The door control receiver receives signals from the transmitter and sends these signals to the main body ECU.

WIRING DIAGRAM

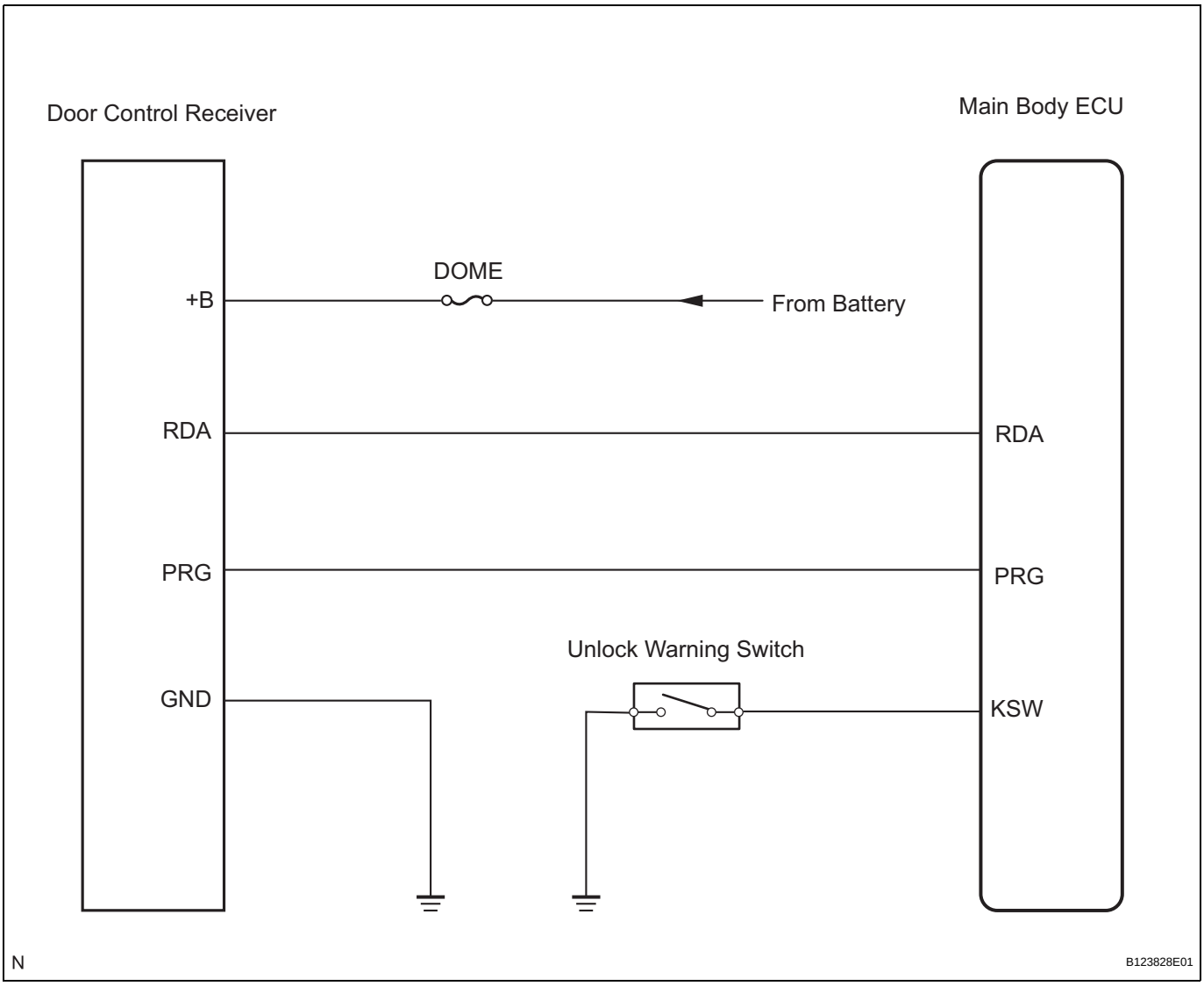

INSPECTION PROCEDURE

1	**CHECK WIRELESS DOOR LOCK CONTROL FUNCTIONS**

OK:

Each function of wireless door lock control system operates normally using transmitter switches (see page DL-54).

OK	**END**

NG

2	REPLACE TRANSMITTER BATTERY

(a) After replacing the transmitter battery, check that the doors can be locked and unlocked using the transmitter switches.
OK:
Doors can be locked and unlocked with transmitter.

OK → **END (TRANSMITTER BATTERY DEFECTIVE)**

NG

3	SWITCH TO SELF DIAGNOSTIC MODE

(a) Switch to self-diagnostic mode by operating the ignition key cylinder.
(1) Make sure the vehicle is in its initial condition. Then insert the key into the ignition key cylinder and remove it.
(2) Within 5 seconds of removing the key, insert the key into the ignition key cylinder (ignition switch OFF). Then turn the ignition switch ON and OFF.
(3) Within 30 seconds of turning the ignition switch OFF, perform the following operation 9 times: turn the ignition switch ON and OFF.
NOTICE:
If the system cannot enter self-diagnostic mode, the system returns to normal mode.
HINT:
- Turning the ignition switch ON after the above operations have been completed ends self-diagnostic mode.
- Do not lock or unlock doors during self-diagnostic mode.

(b) Check that the system has switched to self-diagnostic mode by checking the wireless door lock buzzer sound.
OK:
Buzzer pattern is same as illustration on left.

NG → **Go to step 8**

Buzzer Output:

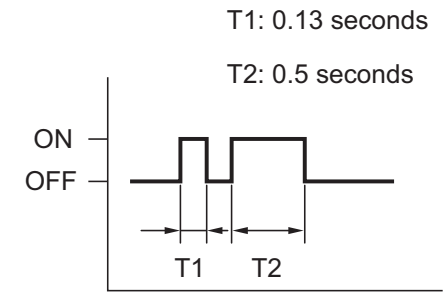

N B110075E18

DL

OK

4	CHECK BY SELF DIAGNOSTIC MODE

(a) Check the diagnostic outputs when the door control transmitter switch is held down. The diagnostic outputs can be checked by the wireless door lock buzzer sound.

Buzzer Output:

Normal Wave (LOCK Switch):

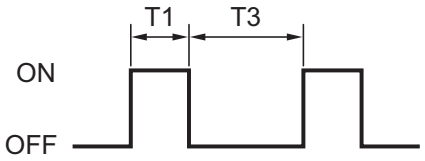

Mismatched Recognition Code:

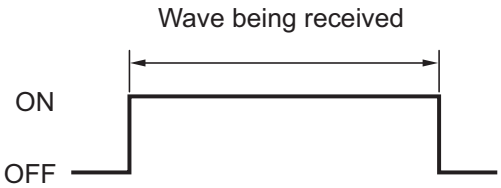

Normal Wave (UNLOCK Switch):

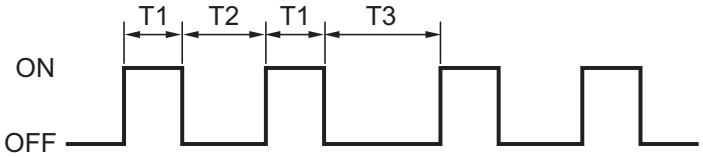

No Diagnosis Output:



Normal Wave (PANIC Switch):

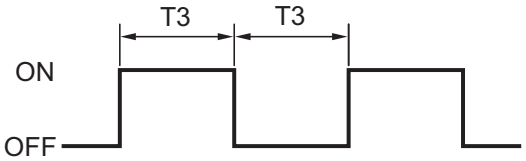

T1: 0.13 seconds

T2: 0.25 seconds

T3: 0.50 seconds

B133371E01

Result

Result	Proceed to
Unmatching recognition code is output	A
Normal waves (buzzer patterns) for LOCK and UNLOCK switches are output	B
No diagnosis outputs	C

B	**REPLACE MAIN BODY ECU**
C	**Go to step 6**

A

5	**REGISTER RECOGNITION CODE**

(a) Check that the system can be switched to rewrite mode or add mode, and that a recognition code can be registered.
OK:
Recognition code can be registered.

NG	**Go to step 12**

OK

END

6	**CHECK RESPONSE OF DOOR CONTROL RECEIVER**

(a) When a new or normally functioning door lock control transmitter switch for the same vehicle type is held down, check that an unmatching recognition code is output.
OK:
Unmatching recognition code is output.

OK	**REPLACE DOOR CONTROL TRANSMITTER MODULE**

NG

7	**REPLACE DOOR CONTROL RECEIVER**

(a) After replacing the door control receiver, check that the doors can be locked and unlocked by using the transmitter LOCK and UNLOCK switches.
OK:
Doors can be locked and unlocked with transmitter.

NG	**REPLACE MAIN BODY ECU**

OK

END

DL

8 CONFIRM PROCEDURES TO ENTER SELF DIAGNOSTIC MODE

Result

Result	Proceed to
Self-diagnostic mode entry successful	A
Self-diagnostic mode entry unsuccessful	B

B → Go to step 3

A

9 INSPECT UNLOCK WARNING SWITCH ASSEMBLY

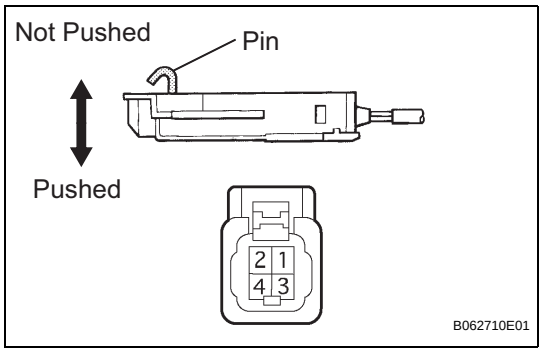

(a) Remove the unlock warning switch.
(b) Measure the resistance.
Standard resistance

Tester Connection	Condition	Specified Condition
1 - 2	Not pushed	10 kΩ or higher
	Pushed	Below 1 Ω

NG → REPLACE UNLOCK WARNING SWITCH ASSEMBLY

OK

10 CHECK HARNESS AND CONNECTOR (DOOR CONTROL RECEIVER - MAIN BODY ECU)

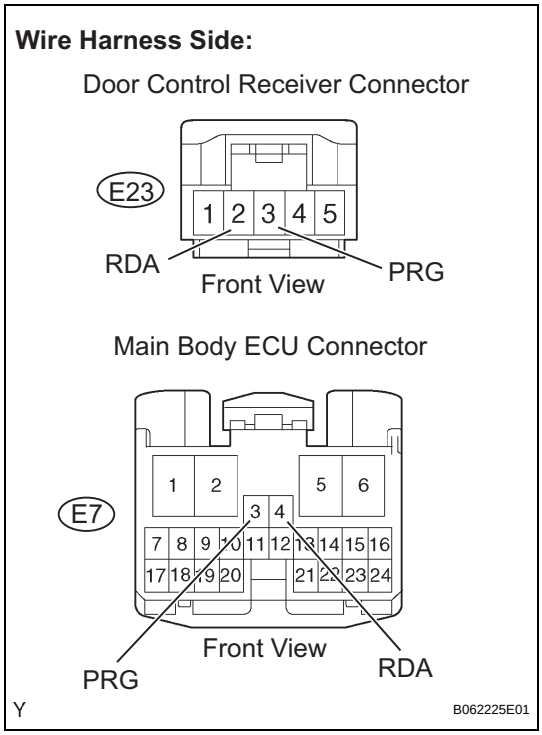

(a) Disconnect the E7 main body ECU connector.
(b) Disconnect the E23 door control receiver connector.
(c) Measure the resistance.
Standard resistance

Tester Connection	Specified Condition
E7-4 (RDA) - E23-2 (RDA)	Below 1 Ω
E7-4 (RDA) or E23-2 (RDA) - Body ground	10 kΩ or higher
E7-3 (PRG) - E23-3 (PRG)	Below 1 Ω
E7-3 (PRG) or E23-3 (PRG) - Body ground	10 kΩ or higher

(d) Reconnect the main body ECU connector.
(e) Reconnect the door control receiver connector.

NG → REPAIR OR REPLACE HARNESS OR CONNECTOR

DL

OK

11	CHECK DOOR CONTROL RECEIVER (OUTPUT)

Component Side:

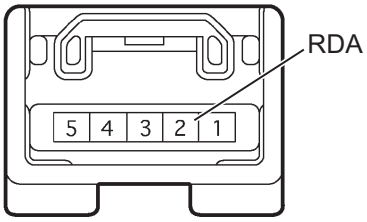

Door Control Receiver

B051174E02

(a) Measure the voltage of the connector.
Standard voltage

Tester Connection	Condition	Specified Condition
E23-2 (RDA) - Body ground	Transmitter switch ON→OFF (No key in ignition key cylinder, all doors closed)	Below 1V → Pulse generation → Below 1V

OK → **REPLACE MAIN BODY ECU**

NG

12	REPLACE DOOR CONTROL TRANSMITTER MODULE

(a) Check that the doors can be locked and unlocked by using the transmitter LOCK and UNLOCK switches.
OK:
Doors can be locked and unlocked with transmitter.

NG → **REPLACE DOOR CONTROL RECEIVER**

OK

END (DOOR CONTROL TRANSMITTER MODULE DEFECTIVE)

DL

No Answer-Back

DESCRIPTION

In this case, wireless control functions are normal but the hazard warning light or wireless door lock buzzer answer-back function does not operate.

WIRING DIAGRAM

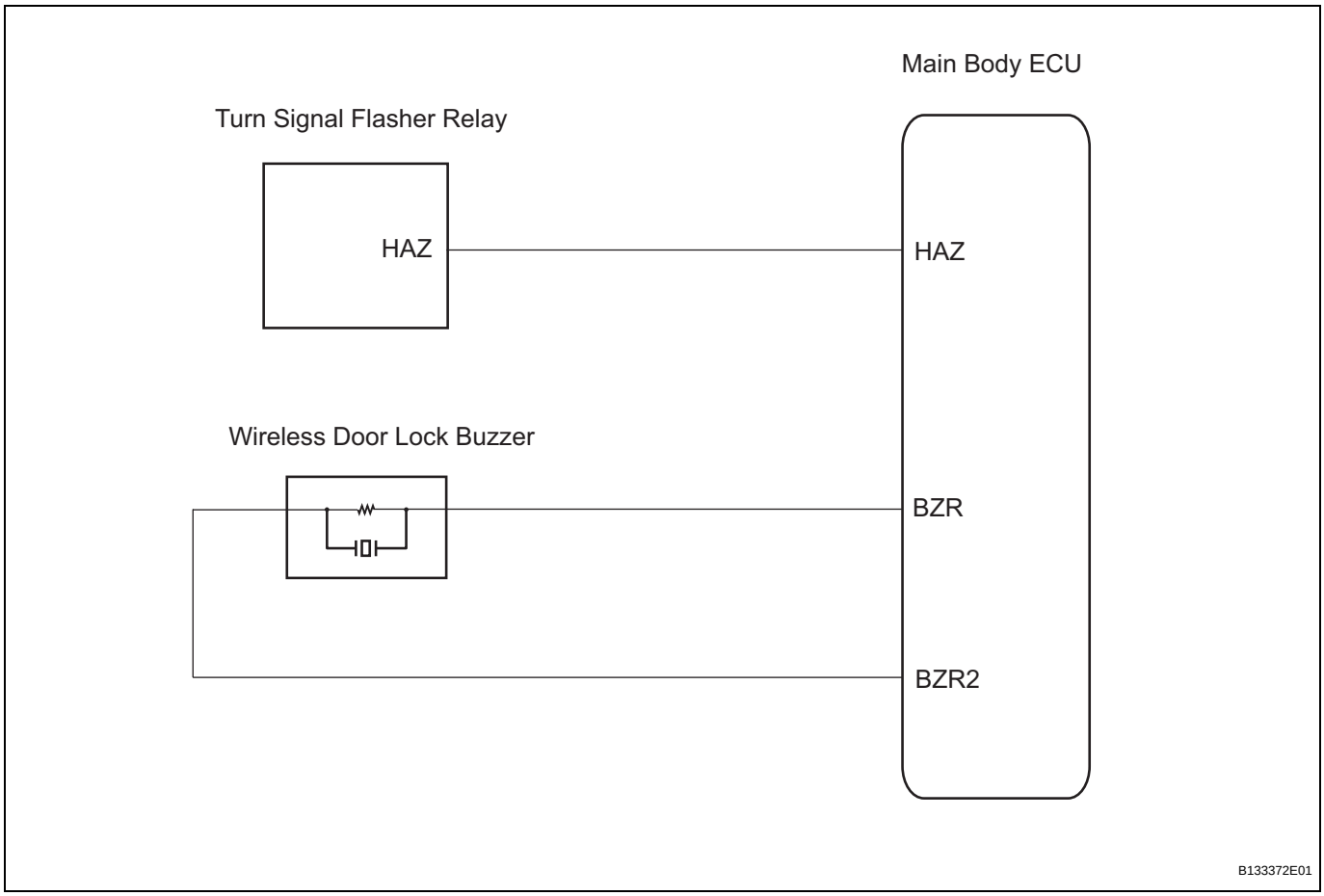

INSPECTION PROCEDURE

1	CHECK WIRELESS DOOR LOCK CONTROL FUNCTIONS

(a) Check the wireless door lock functions by operating the transmitter switches.

Result

Result	Proceed to
Wireless door lock functions are normal	A
Wireless door lock functions are abnormal	B

B → GO TO PROBLEM SYMPTOMS TABLE

A

2	PERFORM ACTIVE TEST BY INTELLIGENT TESTER (HAZ, BUZZ CONT SOUND, BUZZ RESP SOUND)

(a) Select the Active Test, use the intelligent tester to generate a control command, and then check that the wireless door lock buzzer sounds.

BODY

Item	Test Details	Diagnostic Note
HAZARD	Turns turn signal flasher relay ON / OFF	-
BUZZ CONT SOUND	Wireless door lock buzzer (continuous) ON/OFF	-
BUZZ RESP SOUND	Wireless door lock buzzer (beep) ON/OFF	-

Result

Result	Proceed to
Hazard warning light answer-back function does not operate	A
Wireless door lock buzzer answer-back function does not operate	B
Hazard warning light and wireless door lock buzzer answer-back function is normal	C

B → Go to step 4

C → REPLACE MAIN BODY ECU

A

3	CHECK HAZARD WARNING LIGHTS

(a) Check that the hazard warning lights flash when the hazard warning signal switch is pressed.

OK:

Hazard warning lights flash when hazard warning signal switch is pressed.

NG → GO TO LIGHTING SYSTEM

OK

REPLACE MAIN BODY ECU

DL

4	INSPECT WIRELESS DOOR LOCK BUZZER

Component Side:

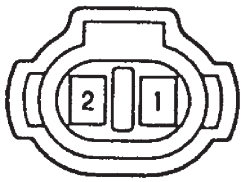

B030785E03

(a) Disconnect the clutch switch connector.
(b) Measure the resistance.
Standard resistance

Tester Connection	Specified Condition
1 - 2	Below 1 Ω

NG → **REPLACE WIRELESS DOOR LOCK BUZZER**

OK

5	CHECK HARNESS AND CONNECTOR (WIRELESS DOOR LOCK BUZZER - MAIN BODY ECU)

Wire Harness Side:

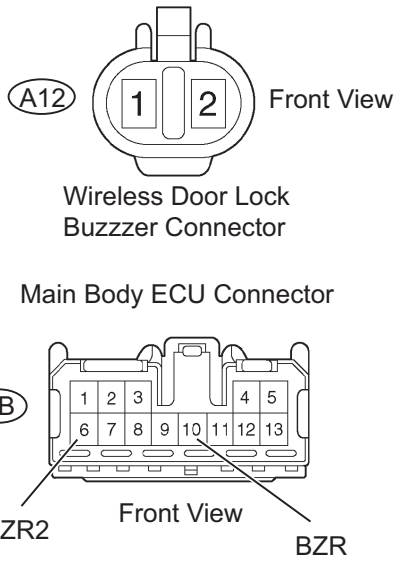

Y

B062227E01

(a) Disconnect the A12 buzzer connector.
(b) Disconnect the 1B main body ECU connector.
(c) Measure the resistance.
Standard resistance

Tester Connection	Specified Condition
1B-10 (BZR) - A12-1	Below 1 Ω
1B-6 (BZR2) - A12-2	Below 1 Ω
1B-10 (BZR) orA12-1 - Body ground	10 kΩ or higher
1B-6 (BZR2) or A12-2 - Body ground	10 kΩ or higher

(d) Reconnect the buzzer connector.
(e) Reconnect the main body ECU connector.

NG → **REPAIR OR REPLACE HARNESS OR CONNECTOR**

OK

REPLACE MAIN BODY ECU

KEY REMINDER WARNING SYSTEM

PRECAUTION

1. DISCONNECT AND RECONNECT CABLE OF NEGATIVE BATTERY TERMINAL

NOTICE:

When disconnecting the cable from the negative (-) battery terminal, initialize the following systems after the cable is reconnected.

System Name	See procedure
METER / GAUGE SYSTEM	See page ME-10

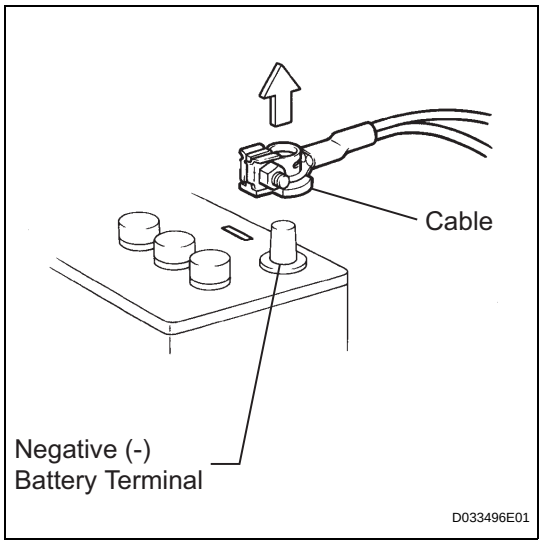

(a) Before performing electronic work, disconnect the cable from the negative (-) battery terminal in order to prevent it from shorting and burning out.

(b) Before disconnecting and reconnecting the battery cable, turn the ignition switch OFF and the headlight dimmer switch OFF. Then loosen the terminal nut completely. Do not damage the cable or terminal.

(c) When the battery cable is disconnected, the clock and radio settings and stored DTCs are erased. Therefore, before disconnecting the battery cable, make a notes of them.

PARTS LOCATION

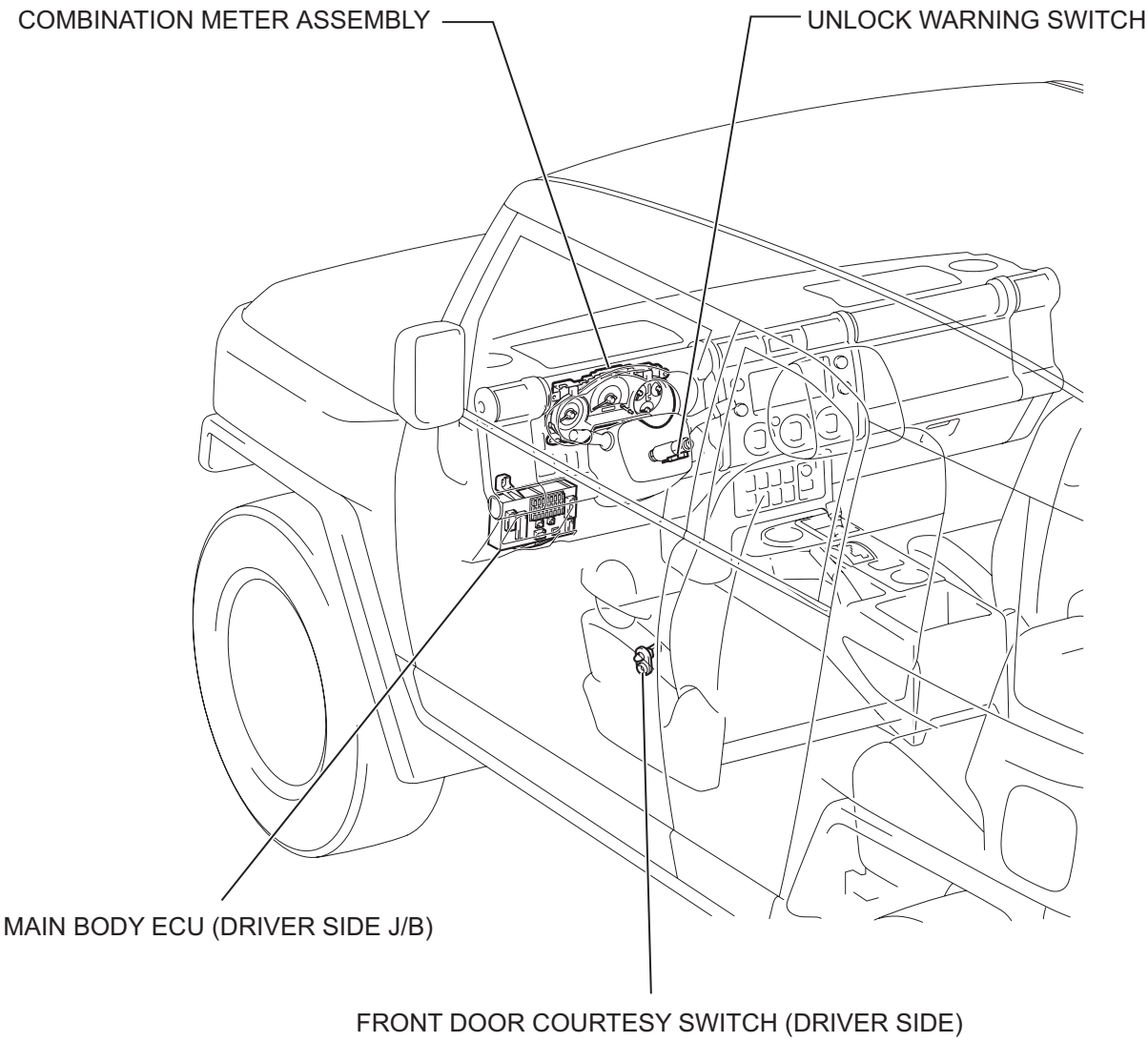

SYSTEM DIAGRAM

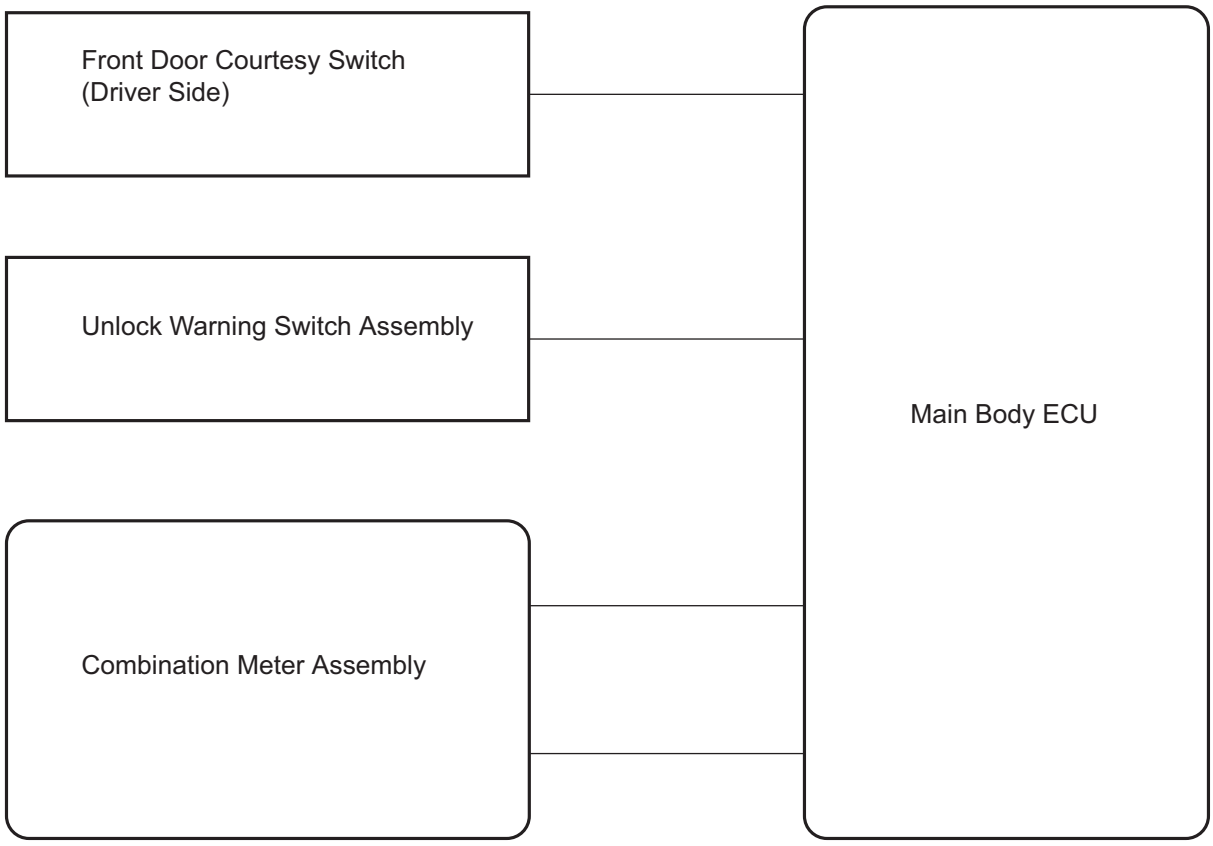

SYSTEM DESCRIPTION

1. KEY REMINDER WARNING SYSTEM DESCRIPTION

(a) When the driver side door is opened with the ignition key in the ACC or LOCK position, this system causes the key reminder warning buzzer to sound in order to warn the driver that the ignition key has not been removed.

HOW TO PROCEED WITH TROUBLESHOOTING

HINT:

- Use these procedures to troubleshoot the key reminder warning system.
- *: Use the intelligent tester.

1 VEHICLE BROUGHT TO WORKSHOP

NEXT

2 INSPECT BATTERY VOLTAGE

Standard voltage:
11 to 14 V

If the voltage is below 11 V, recharge or replace the battery before proceeding.

NEXT

3 PROBLEM SYMPTOMS TABLE

Result:

Result	Proceed to
Fault is not listed in problem symptoms table	A
Fault is listed in problem symptoms table	B

B → **Go to step 5**

A

4 OVERALL ANALYSIS AND TROUBLESHOOTING*

(a) Terminals of ECU (see page DL-70)
(b) Operation Check (see page DL-70)
(c) Data list/ Active test (see page DL-74)

NEXT

5 ADJUST, REPAIR OR REPLACE

NEXT

6	CONFIRMATION TEST

NEXT

END

OPERATION CHECK

1. CHECK FUNCTION

(a) Check that the key reminder warning buzzer sounds.
  (1) With the driver side door closed, insert the key into the ignition key cylinder and then turn the key to LOCK or ACC.
  (2) Check that the buzzer sounds intermittently when the driver side door is open.

(b) Check that the key reminder warning buzzer stops.
  (1) Check that the buzzer stops sounding if any of the following operations is performed while the buzzer is sounding:
    - Close the driver side door (front door courtesy switch is off).
    - Turn the ignition switch ON.
    - Remove the key from the ignition key cylinder.

PROBLEM SYMPTOMS TABLE

HINT:
Use the table below to help determine the causes of the problem symptom. The potential causes of the symptoms are listed in order of probability in the "Suspected Area" column of the table. Check each symptom by checking the suspected areas in the order they are listed. Replace parts as necessary.

Key reminder warning system

Symptom	Suspected area	See page
Key reminder buzzer does not sound	Unlock warning switch assembly	DL-102
	Front door courtesy switch (Driver side)	LI-114
	Wire harness	-
	Combination meter assembly	ME-49
	Main body ECU	DL-70

TERMINALS OF ECU

1. CHECK COMBINATION METER ASSEMBLY

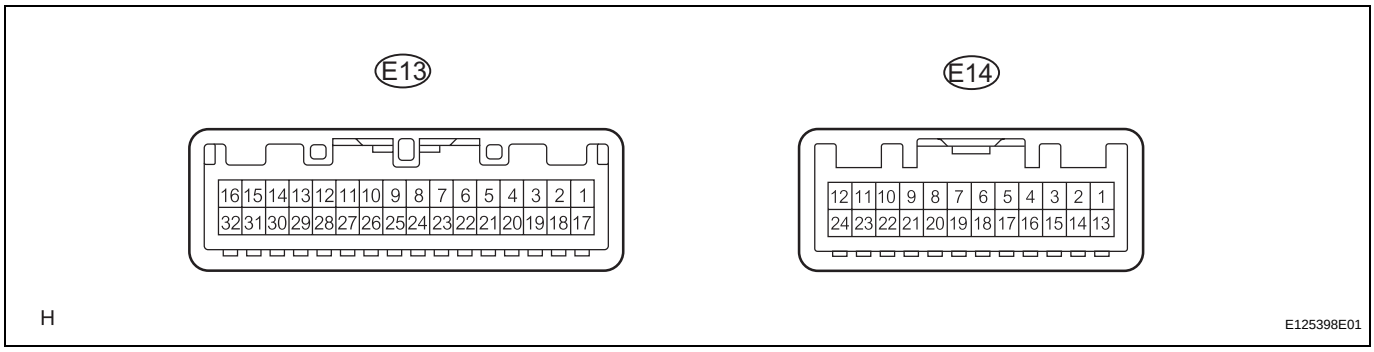

(a) Using the tester probes, touch the terminals from the back of the vehicle wire harness connectors, and measure the voltages and resistances.

Standard:

Symbols (Terminal No.)	Wiring Color	Terminal Description	Condition	Specified Condition
IG+ (E13-2) - Body ground	R-L - Body ground	Ignition switch signal	Ignition switch OFF → ON	Below 1 V → 11 to 14 V
B (E13-1) - Body ground	R - Body ground	Battery	Always	11 to 14 V
KSW (E13-9) - Body ground	V-G - Body ground	Key unlock warning switch signal input	Key inserted → Key removed from ignition key cylinder	Below 1 V → 10 to 14 V
DOOR (E13-29) - Body ground	W-L - Body ground	Driver door courtesy switch signal input	Driver door closed → open	Below 1 V → 11 to 14 V
ES (E13-21) - Body ground	W-B - Body ground	Ground	Always	Below 1 Ω

If the result is not as specified, there may be a malfunction in the wire harness.

2. CHECK MAIN BODY ECU

Main Body ECU:

Left View:

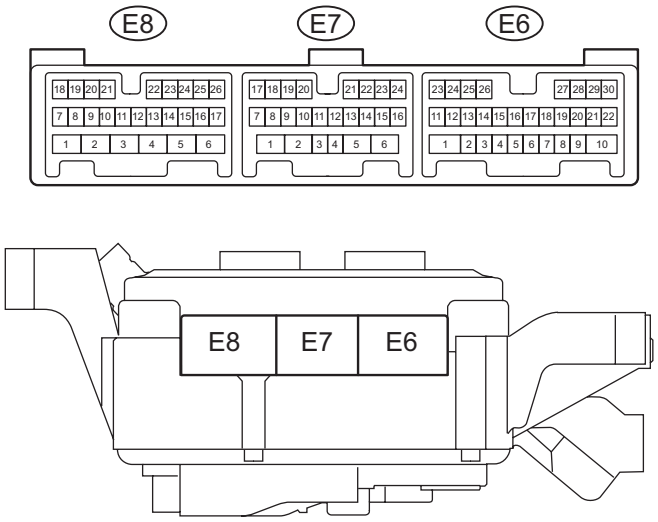

Rear View:

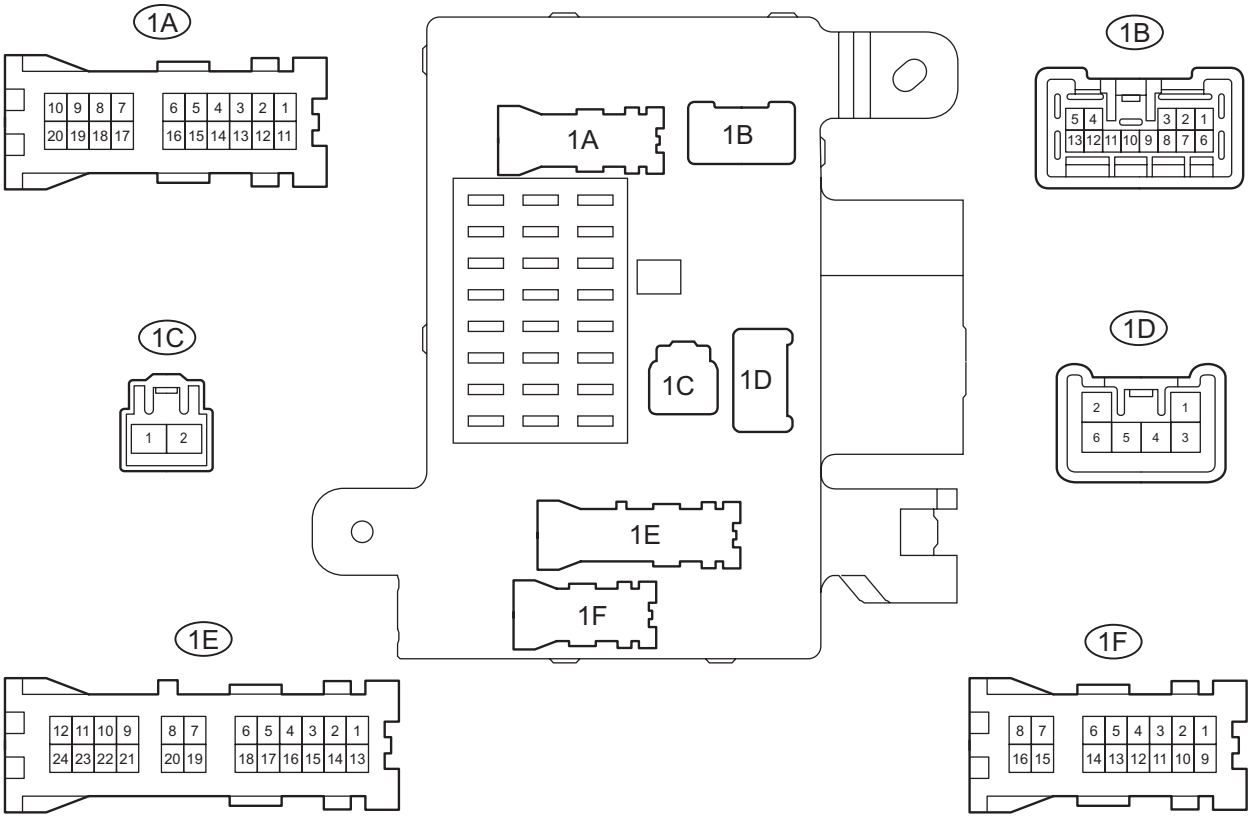

DL

Y

B136051E01

Main Body ECU:

Front View:

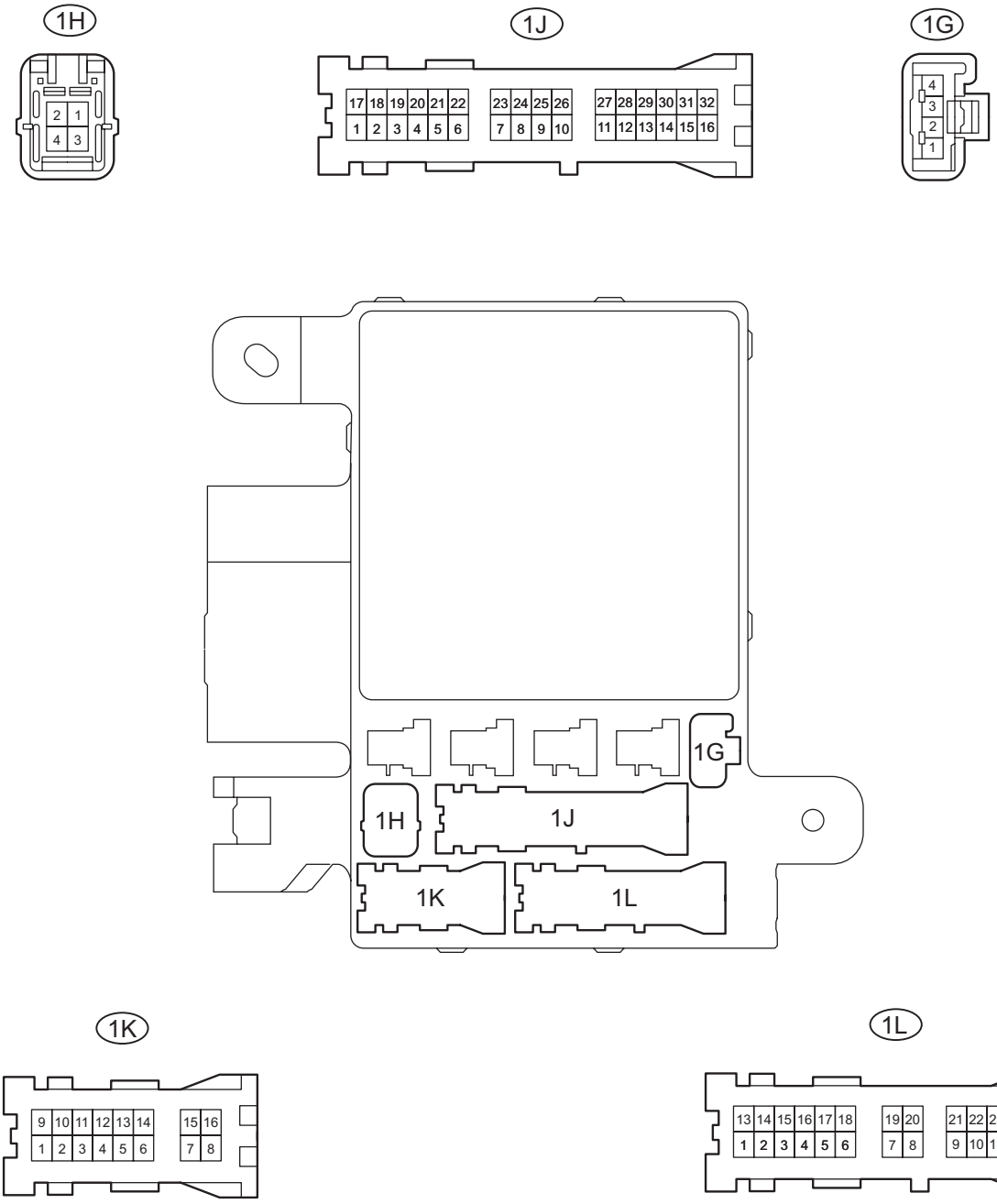

DL

Y

B136052E01

(a) Using the tester probes, touch the terminals from the back of the vehicle wire harness connectors, and measure the voltages.

Standard voltage:

Symbols (Terminal No.)	Wiring Color	Terminal Description	Condition	Specified Condition
KSW (E8-14) - Body ground	G-Y - Body ground	Key unlock warning switch input	Key inserted → Key removed from ignition key cylinder	Below 1 V → to 14 V
GND1,2 (1H-2) - Body ground	W-B - Body ground	Ground	Always	Below 1 V
BECU (1B-4) - Body ground	W-R - Body ground	Battery	Always	to 14 V
DCTY (E7-23) - Body ground	R-B - Body ground	Driver door courtesy switch input	Driver door closed → open	to 14 V → Below 1 V
KSWO (E8-15) - Body ground	V-G - Body ground	Key unlock warning switch signal output	Key inserted → Key removed from ignition key cylinder	Below 1 V → to 14 V
DCY2 (E8-11) - Body ground	W-L - Body ground	Driver door courtesy switch signal output	Driver door closed → open	10 to 14 V → Below 1 V

If the result is not as specified, there may be a malfunction in the wire harness.

DATA LIST / ACTIVE TEST

1. READ DATA LIST

HINT:

Using the intelligent tester's DATA LIST allows a switch, actuator and other item values to be read without removing any parts. Reading the DATA LIST early in troubleshooting is one way to save time.

(a) Connect the intelligent tester with CAN VIM to the DLC3.

(b) Turn the ignition switch ON.

(c) Read the DATA LIST.

BODY:

Item	Measurement Item / Display (Range)	Normal Condition	Diagnostic Note
KEY UNLK WRN SW	Unlock warning switch signal /ON or OFF	ON: Key is in ignition key cylinder OFF: No key is in ignition key cylinder	-
D DOR CTY SW	Driver side door courtesy switch signal /ON or OFF	ON: Driver side door is open OFF: Driver side door is closed	-

Key Reminder Buzzer does not Sound

DESCRIPTION

The key reminder warning buzzer sounds when the driver side door is opened while the ignition switch is in the LOCK or ACC position. The key reminder warning buzzer is activated when the main body ECU sends a key switch signal and driver side courtesy switch signal to the combination meter.

WIRING DIAGRAM

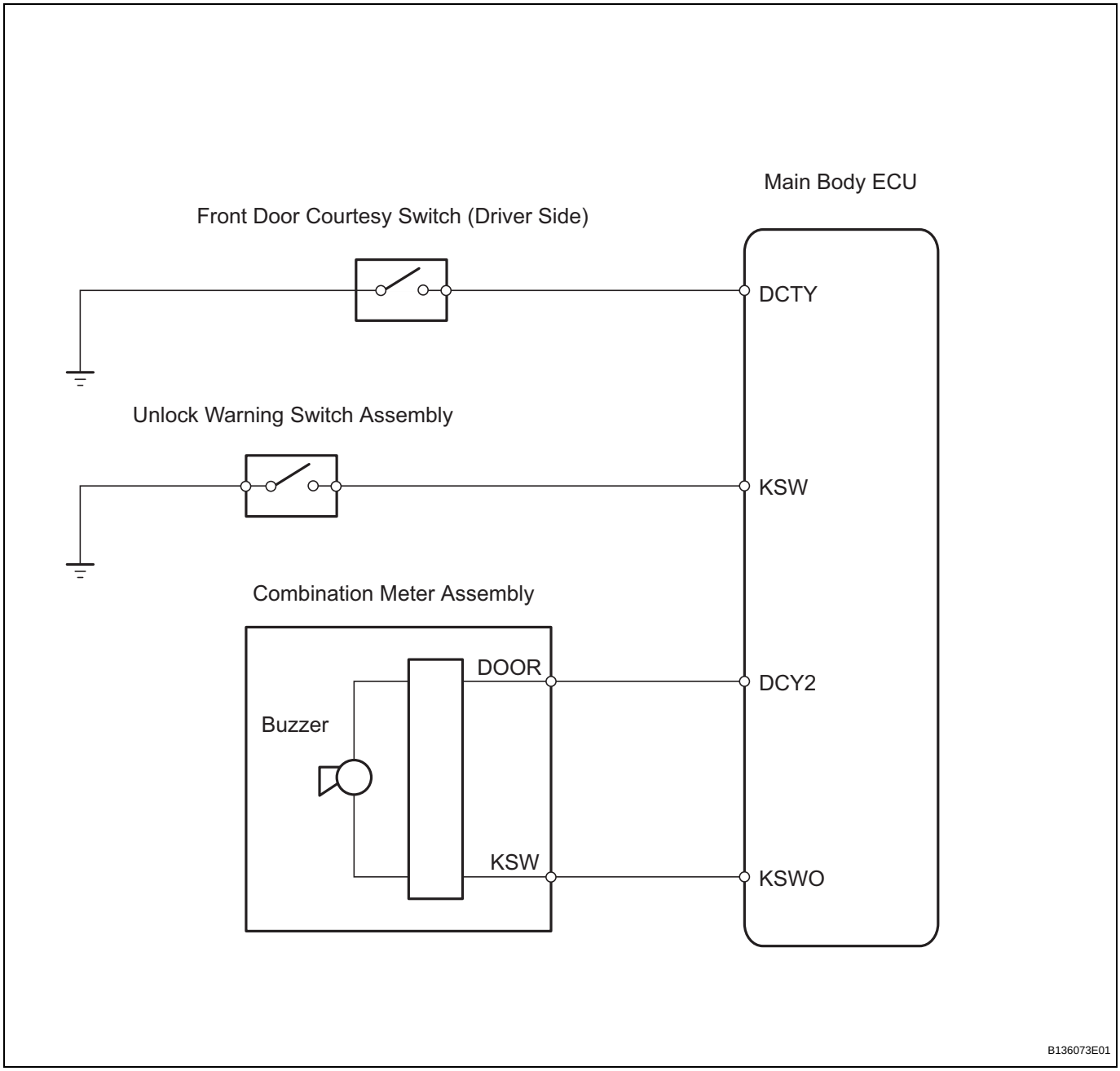

INSPECTION PROCEDURE

1	**READ VALUE OF INTELLIGENT TESTER (D DOR CTY SW)**

(a) Connect the intelligent tester with CAN VIM to the DLC3.

(b) Turn the ignition switch ON and turn the intelligent tester main switch ON.
(c) Select the items below in the "DATA LIST" and read the display on the intelligent tester.

BODY

Item	Measurement Item / Display (Range)	Normal Condition	Diagnostic Note
D DOR CTY SW	Driver side door courtesy switch signal / ON or OFF	ON: Driver side door is open OFF: Driver side door is closed	-

OK:
When the driver side door is opened/closed, the display will change as shown above.

OK → **Go to step 4**

NG

2 INSPECT FRONT DOOR COURTESY SWITCH (DRIVER SIDE)

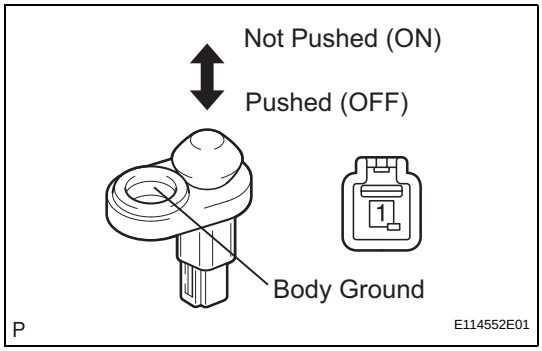

(a) Remove the front door courtesy switch (driver side).
(b) Measure the resistance.
Standard resistance

Tester Connection	Condition	Specified Condition
1 - Body ground	Not pushed (ON)	Below 1 Ω
1 - Body ground	Pushed (OFF)	10 kΩor higher

(c) Reinstall the front door courtesy switch (driver side).

NG → **REPLACE FRONT DOOR COURTESY SWITCH (DRIVER SIDE)**

OK

DL

3	CHECK HARNESS AND CONNECTOR (FRONT DOOR COURTESY SWITCH (DRIVER SIDE) - MAIN BODY ECU)

Wire Harness Side:

Front Door Courtesy Switch Connector (Driver Side)

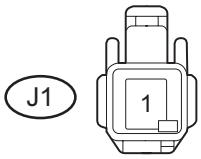

Front View

Main Body ECU Connector

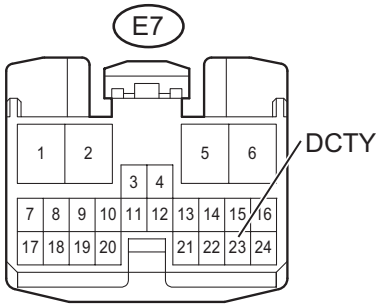

Front View

B136069E01

(a) Disconnect the J1 front door courtesy switch (driver side) connector.
(b) Disconnect the E7 main body ECU connector.
(c) Measure the resistance.

Standard resistance

Tester Connection	Specified Condition
J1-1 - E7-23 (DCTY)	Below 1 Ω
J1-1 or E7-23 (DCTY) - Body ground	10 kΩor higher

(d) Reconnect the courtesy switch and main body ECU connectors.

NG → **REPAIR OR REPLACE HARNESS OR CONNECTOR**

OK

4	READ VALUE OF INTELLIGENT TESTER (KEY UNLK WRN SW)

(a) Connect the intelligent tester with CAN VIM to the DLC3.
(b) Turn the ignition switch ON and turn the intelligent tester main switch ON.
(c) Select the item below in the "DATA LIST" and read the display on the intelligent tester.

BODY

Item	Measurement Item / Display (Range)	Normal Condition	Diagnostic Note
KEY UNLK WRN SW	Unlock warning switch signal / ON or OFF	ON: Key is in ignition key cylinder OFF: No key is in ignition key cylinder	-

OK:

When the ignition key is operated, the display changes as shown above.

OK → **Go to step 7**

DL

NG

5 INSPECT UNLOCK WARNING SWITCH ASSEMBLY

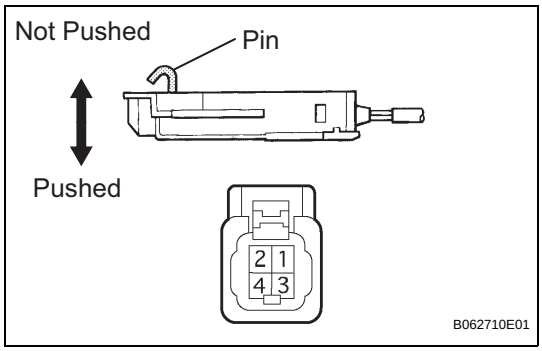

(a) Remove the unlock warning switch assembly.
(b) Measure the resistance.
Standard resistance

Tester Connection	Condition	Specified Condition
1 - 2	Not pushed	10 kΩor higher
1 - 2	Pushed	Below 1 Ω

(c) Reinstall the unlock warning switch assembly.

NG → **REPLACE UNLOCK WARNING SWITCH ASSEMBLY**

OK

6 CHECK HARNESS AND CONNECTOR (UNLOCK WARNING SWITCH ASSEMBLY - MAIN BODY ECU)

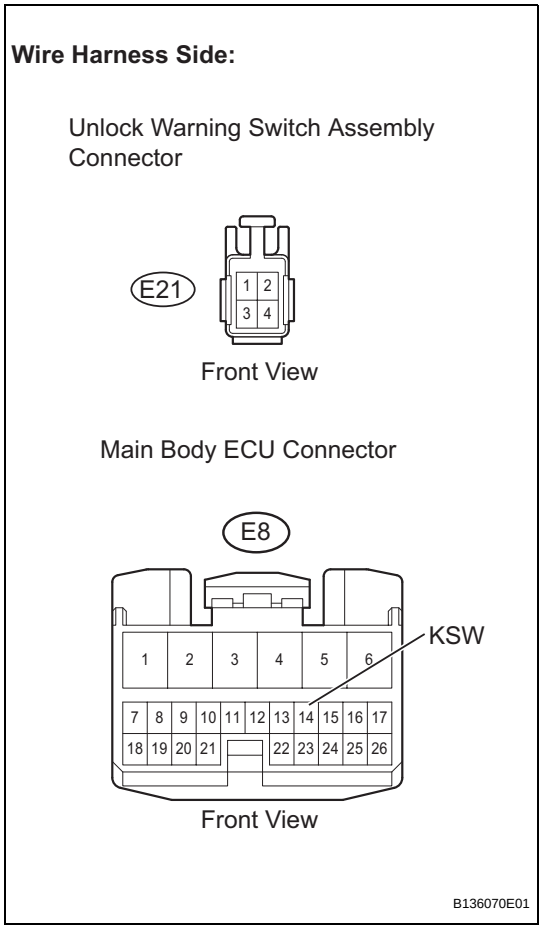

(a) Disconnect the E21 unlock warning switch assembly connector.
(b) Disconnect the E8 main body ECU connector.
(c) Measure the resistance.
Standard resistance

Tester Connection	Specified Condition
E21-1 - E8-14 (KSW)	Below 1 Ω
E21-1 or E8-14 (KSW) - Body ground	10 kΩor higher
E21-2 - Body ground	Below 1 Ω

(d) Reconnect the unlock warning switch and the main body ECU connectors.

NG → **REPAIR OR REPLACE HARNESS OR CONNECTOR**

OK

DL

7 INSPECT MAIN BODY ECU

Main Body ECU:

Left View:

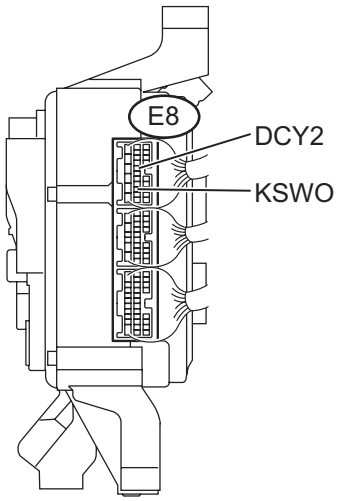

B136071E01

(a) Measure the voltage.
Standard voltage

Tester Connection	Condition	Specified Condition
E8-15 (KSWO) - Body ground	Key is in ignition key cylinder	Below 1 V
E8-15 (KSWO) - Body ground	No key is in ignition key cylinder	10 to 14 V
E8-11 (DCY2) - Body ground	Driver side door is open	Below 1 V
E8-11 (DCY2) - Body ground	Driver side door is closed	10 to 14 V

NG → **REPLACE MAIN BODY ECU**

OK

8 CHECK HARNESS AND CONNECTOR (COMBINATION METER ASSEMBLY - MAIN BODY ECU)

Wire Harness Side:

Main Body ECU Connector

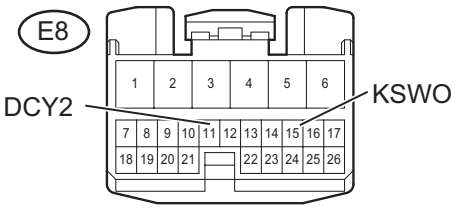

Front View

Combination Meter Assembly Connector

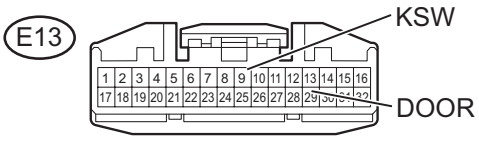

Front View

B136072E01

(a) Disconnect the E8 main body ECU connector.
(b) Disconnect the E13 combination meter assembly connector.
(c) Measure the resistance.
Standard resistance

Tester Connection	Specified Condition
E8-15 (KSWO) - E13-9 (KSW)	Below 1 Ω
E8-15 (KSWO) or E13-9 (KSW) - Body ground	10 kΩor higher
E8-11 (DCY2) - E13-29 (DOOR)	Below 1 Ω
E8-11 (DCY2) or E13-29 (DOOR) - Body ground	10 kΩor higher

(d) Reconnect the main body ECU and combination meter assembly connectors.

NG → **REPAIR OR REPLACE HARNESS OR CONNECTOR**

DL

OK

REPLACE COMBINATION METER ASSEMBLY

TRANSMITTER BATTERY

COMPONENTS

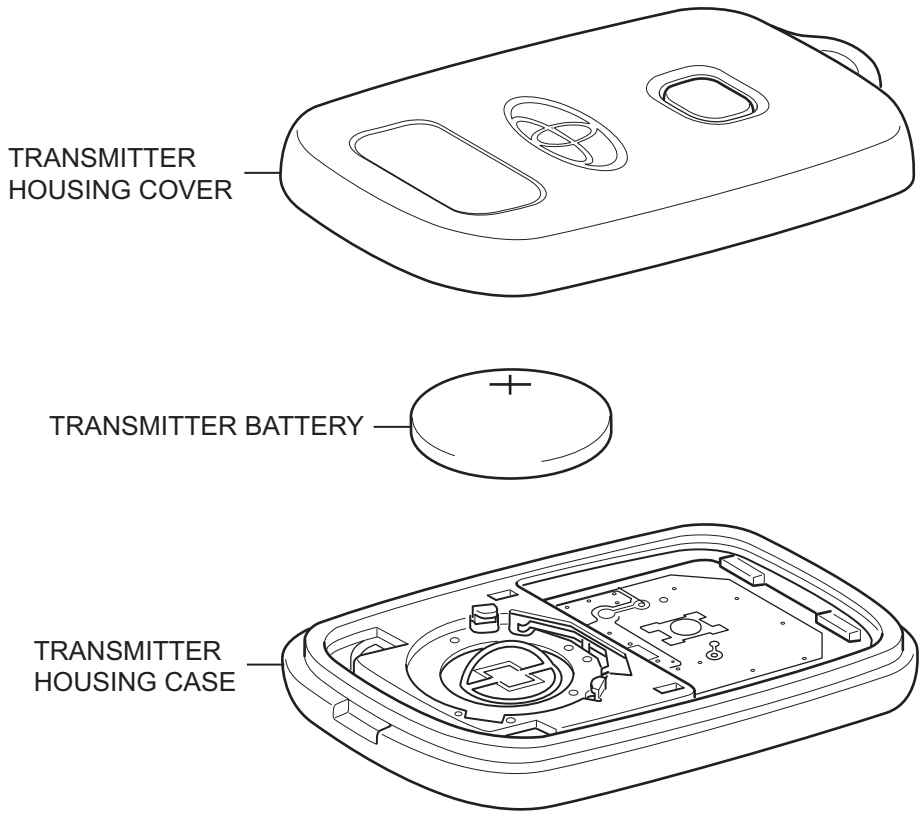

T

B135975E01

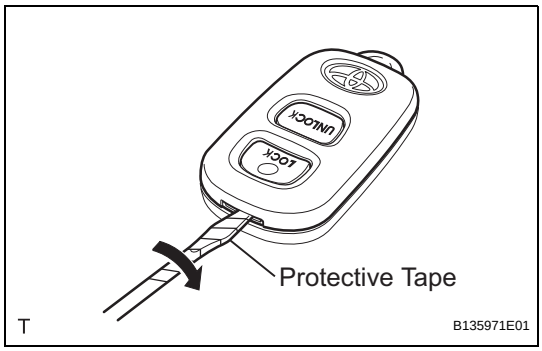

REMOVAL

1. REMOVE TRANSMITTER BATTERY

(a) Remove the transmitter battery.

(1) Using a screwdriver with its tip wrapped in protective tape, pry apart the transmitter case.

NOTICE:

Do not use excessive force when prying apart the transmitter case.

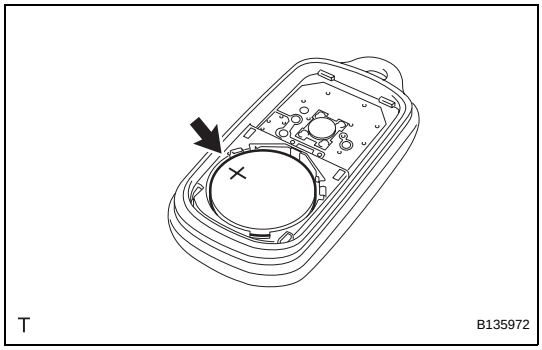

(2) Remove the battery (lithium battery: CR2016).

NOTICE:

- **Do not push the terminals with your finger.**
- **Do not use excessive force when prying up the battery (lithium battery: CR2016) as this may damage the terminals.**
- **Do not touch the battery with wet hands. Water may cause rust.**
- **Do not touch or move any components inside the transmitter as this may interfere with its proper operation.**

INSTALLATION

1. INSTALL TRANSMITTER BATTERY

(a) Install the transmitter battery.

(1) Install the battery (lithium battery: CR2016) with the positive (+) side up, as shown in the illustration.

NOTICE:

- **Make sure that the positive (+) side and the negative (-) side of the transmitter battery are correctly matched up with the transmitter terminals.**
- **Do not bend the transmitter battery electrode during insertion.**
- **Keep the transmitter cover interior free of dust and oil.**

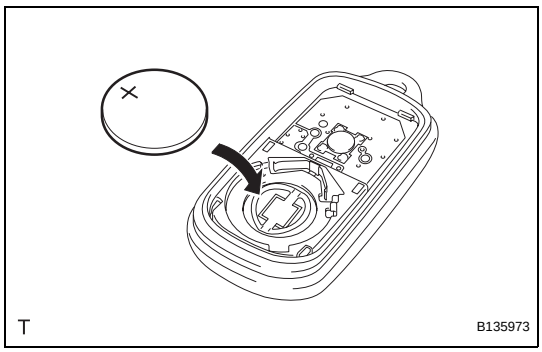

(2) Install the transmitter case securely.

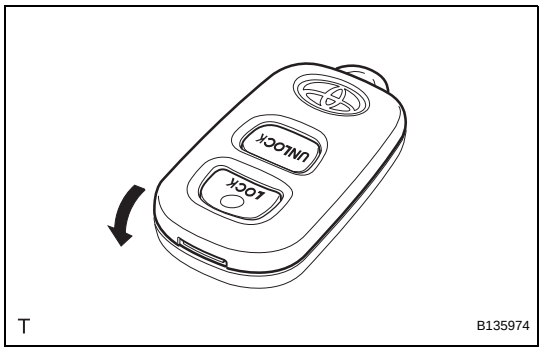

DOOR CONTROL TRANSMITTER MODULE

REGISTRATION

HINT:

- Recognition code registration is necessary when the door control transmitter or the door control receiver is replaced with a new one.
- Add Mode is used to register new recognition codes while retaining the previously registered codes. This mode is used when new transmitters are added. If the number of registered codes exceeds 4, the previously registered codes will be erased in order, starting from the first registered code.
- Rewrite Mode is used to erase all the previously registered recognition codes in order to register new recognition codes. This mode is used when the transmitter or the door control receiver is replaced with a new one.
- Confirmation Mode is used to confirm how many recognition codes have already been registered before any additional recognition codes are registered.
- Prohibition Mode is used to erase all the registered codes and disable the wireless door lock function. This mode is used when the transmitters are lost.
- The registration procedure described on the following pages must be performed in order.

1. REGISTER RECOGNITION CODE USING INTELLIGENT TESTER

(a) Turn the ignition switch to the ON position.

(b) Select Add or Rewrite Mode according to the intelligent tester display.

(c) The number of registered codes is indicated.

(d) Registration of the door control transmitter.

(1) Within 30 seconds of Add Mode or Rewrite Mode being selected, press LOCK and UNLOCK switches on the transmitter switch simultaneously.

(2) Within 3 seconds of moving your finger away from the switches, press either switch of the transmitter for more than 1.0 seconds.

(3) The main body ECU automatically performs the power door LOCK-UNLOCK operation after the switch on the transmitter is turned off, in order to indicate whether registration has been completed correctly or not.

Response to registration completion:

LOCK-UNLOCK Occurs Once	LOCK-UNLOCK Occurs Twice
Registration of recognition code has been completed.	Registration of recognition code has failed.

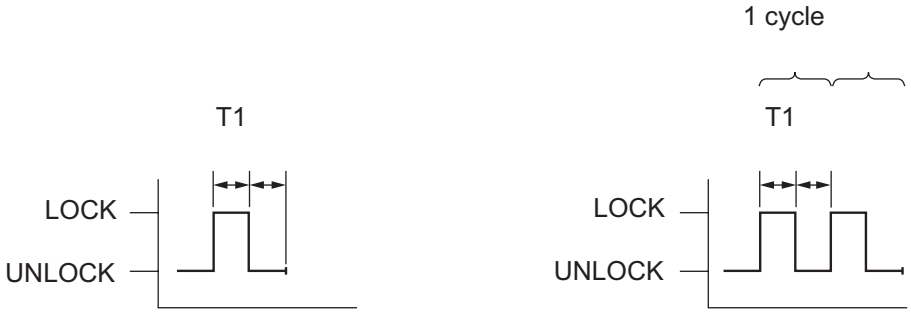

T1: Approximately 1 second

Y

B106704E01

DL

HINT:
If the LOCK-UNLOCK operation is performed twice, registration of the recognition code has failed. Perform registration procedures from the beginning once again.

(4) If registration is continued, the next recognition code must be registered in the transmitter within 30 seconds.
HINT:
Up to four recognition codes can be registered.

(e) Ending registration mode.
(1) Registration mode will end when any of the following occurs:
- The intelligent tester is used to order completion.
- The intelligent tester is disconnected.

(f) Registration of the recognition codes (Add Mode and Rewrite Mode) is completed.

2. REGISTER RECOGNITION CODE MANUAL OPERATION

(a) Check that the following conditions are met.
- No key is in the ignition key cylinder.
- Only driver side door is open.

(b) Insert the key into the ignition key cylinder, and remove it twice within 5 seconds.

(c) Perform the following operations within 40 seconds.
(1) Close and open the driver side door twice.
(2) Insert the key into the ignition key cylinder, then remove it.

(d) Perform the following operations within 40 seconds.
(1) Close and open the driver side door twice.
(2) Insert the key into the ignition key cylinder and close all doors.

(e) Perform the following operations within 40 seconds.
(1) Turn the ignition switch from LOCK to ON and back to LOCK 1 to 5 times at approximately 1 second intervals to select a mode (see the table below).

Number of ON-LOCK operations of ignition switch:

Add Mode ON-LOCK operation: Once

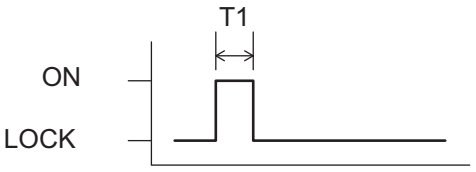

Rewrite Mode ON-LOCK operation: Twice

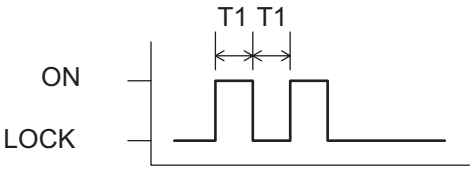

Confirmation Mode ON-LOCK operation: 3 times

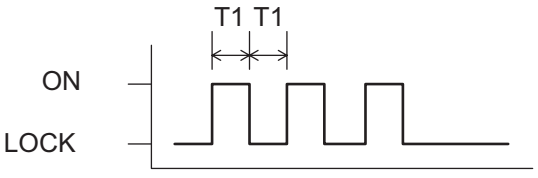

Prohibition Mode ON-LOCK operation: 5 times

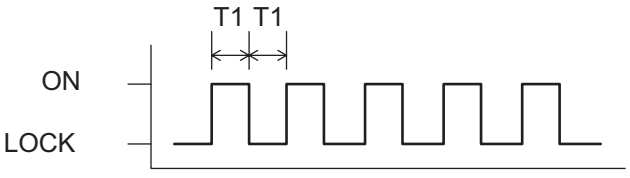

T1: Approximately 1 second

B111914E03

DL

HINT:
If the number of ignition switch ON-LOCK operations is 0, 4, 6 or more, there will be no response (power DOOR LOCK and UNLOCK operation) to show which mode has been selected.

(2) Remove the key from the ignition key cylinder.

(f) The main body ECU automatically performs power door LOCK-UNLOCK operations to indicate which mode has been selected.

Response to mode selection (Power door lock operation):

Add Mode LOCK-UNLOCK operation: Once

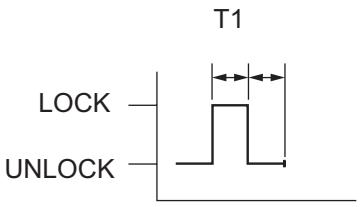

Confirmation Mode LOCK-UNLOCK operation: The number of registered codes (1 to 5 times)

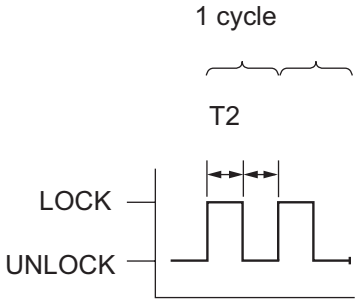

Rewrite Mode LOCK-UNLOCK operation: Twice

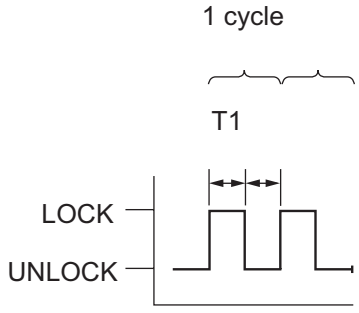

Prohibition Mode LOCK-UNLOCK operation: 5 times

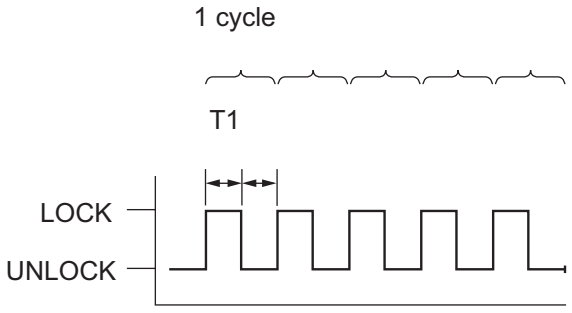

T1: Approximately 1 second **T2: Approximately 2 seconds**

Y

B106703E01

HINT:

- In Confirmation Mode, LOCK-UNLOCK operation will occur once for each recognition code that has been registered. For example, if 2 recognition codes have been registered, the LOCK-UNLOCK operation will occur twice.
- In Confirmation Mode, if no recognition codes have been registered, LOCK-UNLOCK operation will occur 11 times.

- If Confirmation Mode or Prohibition Mode is selected, the operation ends after the response to the selected mode is completed.

(g) Register a new recognition code (Add Mode or Rewrite Mode) in accordance with the following procedure.
  (1) Within 40 seconds of Add Mode or Rewrite Mode being selected, press the LOCK and UNLOCK switches on the transmitter switch simultaneously for 1.0 to 1.5 seconds. Within 3 seconds of moving your finger away from the switches, press either switch of the transmitter for more than 1.0 second.
  (2) Within 3 seconds of the transmitter switch being released, the LOCK-UNLOCK operation will be automatically performed once if the registration of the recognition code is correctly completed.

Response to registration completion:

LOCK-UNLOCK Occurs Once

Registration of recognition code has been completed.

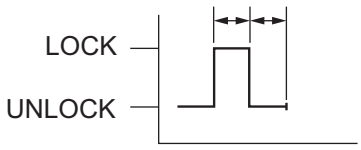

LOCK-UNLOCK Occurs Twice

Registration of recognition code has failed.

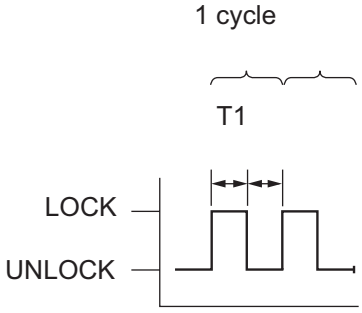

T1: Approximately 1 second

Y

B106704E01

HINT:
If the LOCK-UNLOCK operation is performed twice, the registration of the recognition code has failed, so perform the registration procedure from the beginning once again.

(h) If multiple transmitters need to be registered, repeat the registration of a new recognition code procedure within 40 seconds of the previous registration.

DL

(i) If any of the following conditions is met, the Registration Mode will end:
  (1) The key is inserted into the ignition key cylinder.
  (2) Any doors are opened.
  (3) 40 seconds or more elapse after code registration.

(j) Registration of the recognition codes (Add Mode and Rewrite Mode) is completed.

INSPECTION

1. INSPECT DOOR CONTROL TRANSMITTER MODULE

(a) Check the operation of the transmitter.

(1) Remove the battery (lithium battery) from the transmitter.

(2) Install a new or normal battery (lithium battery).

(3) If a new or normal battery is not available, connect 2 new 1.5 V batteries in series. Connect the positive (+) battery electrode to the battery receptacle side terminal, and the negative (-) battery electrode to the bottom terminal, and apply a voltage of 3 V to the transmitter.

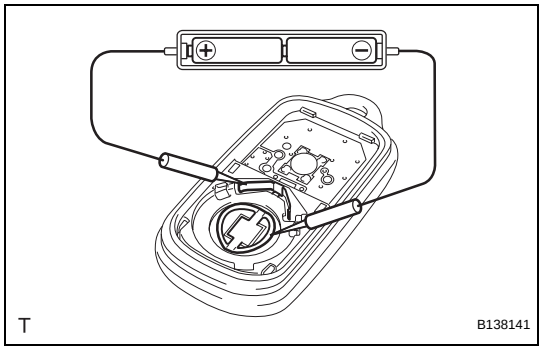

(4) In a location that is approximately 1 m (3.28ft.) away from the driver side outside door handle, point the key plate of the transmitter at the vehicle and check the operation of the transmitter by pressing the transmitter switches on the transmitter body.

Standard:

The door lock/unlock can be operated via remote control.

HINT:

- The maximum operational distance differs depending on the way the transmitter is held and the location.
- Since the transmitter uses faint electric waves, the operational distance might be shortened if noise or a strong electric wave occurs in the area where the frequency is used.

(5) Install the battery (lithium battery).

(b) Check the battery capacity.

HINT:

- The capacity of the battery can be checked only when the battery is installed in the transmitter. For a lithium battery used in the transmitter, a voltage of more than 2.5 V is shown on the tester until the energy is completely consumed without the battery installed in the transmitter. Therefore, it is necessary to measure the voltage with the battery installed in the transmitter (a resistance of 1.2 kΩ is applied to the battery) to check the amount of energy left in the battery.
- If the transmitter is faulty, the amount of energy left in the battery might not be checked correctly.

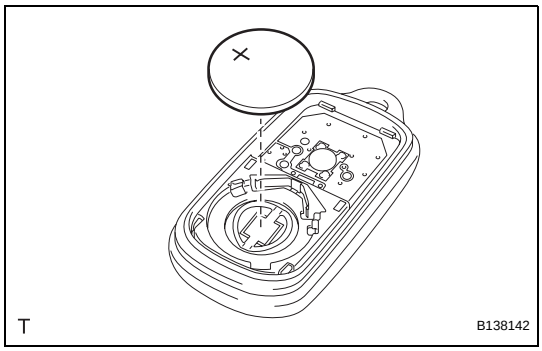

(1) Remove the battery (lithium battery) from the transmitter.

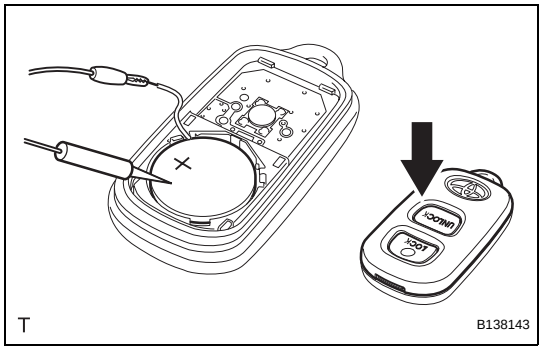

(2) Connect the lead to the negative (-) terminal of the transmitter and install the battery.
(3) Connect the positive (+) tester probe to the positive (+) side of the battery (lithium battery) and the negative (-) tester probe to the lead respectively.
(4) Press one of the transmitter switches on the transmitter for approximately 1 second.
(5) Press either transmitter switch again and check the voltage.
Standard Voltage:
2.2 V or higher
HINT:
- If the temperature of the battery is low, the inspection cannot be performed correctly. If the result of the test is less than 2.2 V, conduct the test again after leaving the battery in a place with a temperature of 18°C (64°F) for more than 30 minutes.
- The automatic power-off function causes the battery voltage to be 2.5 V or more (a voltage with no resistance applied to the battery) when 0.8 seconds have passed after the switch is pressed. Therefore, read the voltage immediately after the switch is pressed.
- Press the switch at least 3 times before reading the voltage. If the battery has just been returned to 18°C (64°F), the voltage may be unusually high for the first or second voltage reading.

(6) Remove the lead.
(7) Set the battery (lithium battery) in the transmitter.

DL

DOOR CONTROL SWITCH (for Driver Side)

COMPONENTS

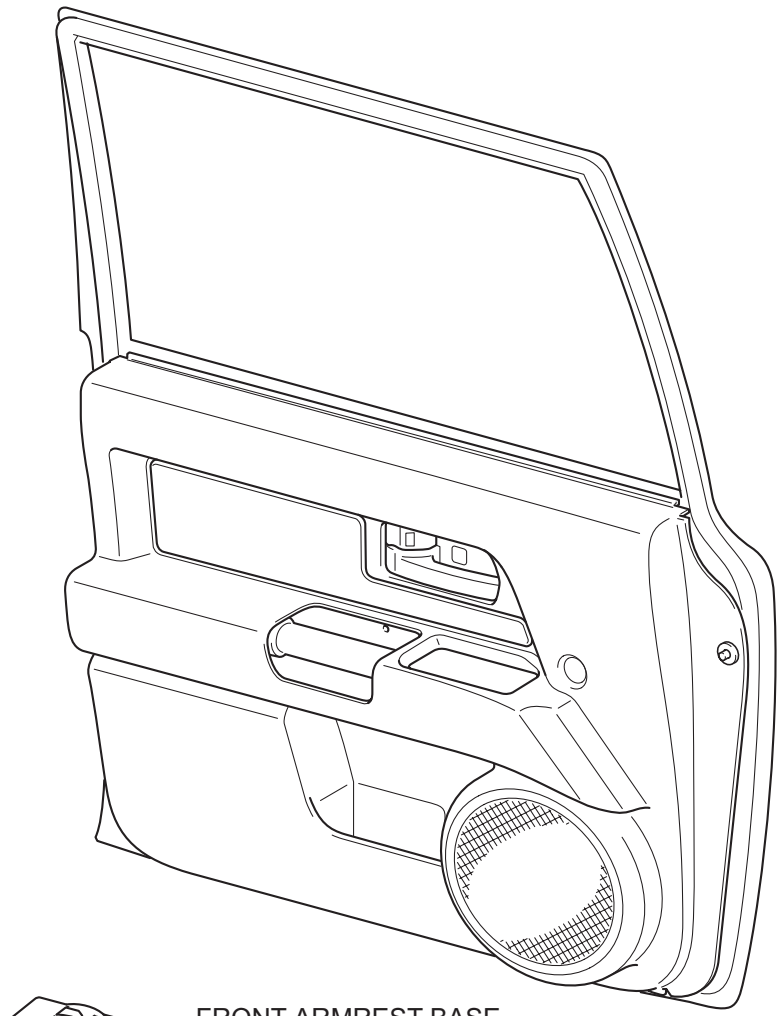

Y

B135947E02

REMOVAL

1. **DISCONNECT CABLE FROM NEGATIVE BATTERY TERMINAL**
2. **REMOVE FRONT ARMREST BASE UPPER PANEL (See page WS-25)**
3. **REMOVE POWER WINDOW REGULATOR MASTER SWITCH ASSEMBLY**
   (a) Remove the 3 screws and the power window regulator master switch.

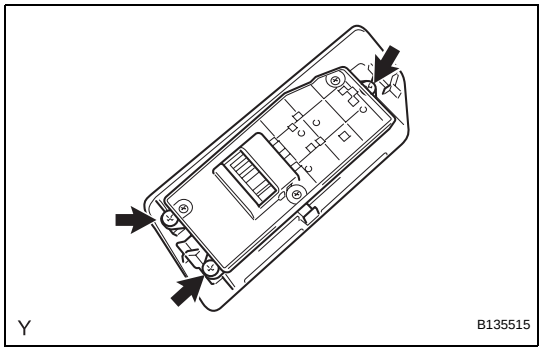

INSPECTION

1. **INSPECT POWER WINDOW REGULATOR MASTER SWITCH ASSEMBLY**
   (a) Check the resistance of the door control switch.
      (1) Using an ohmmeter, measure the resistance and check the results in accordance with the value(s) in the table below.
      Standard Resistance

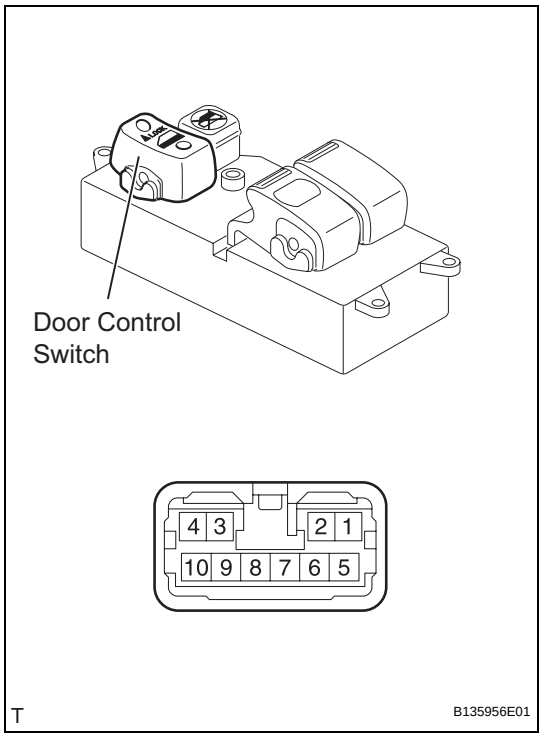

Tester Connection	Switch Condition	Specified Condition
1 - 2	Locked	Below 1 Ω
1 - 2	OFF	10 kΩ or higher
1 - 5	OFF	10 kΩ or higher
1 - 5	Unlocked	Below 1 Ω

If the result is not as specified, replace the power window regulator master switch.

INSTALLATION

1. **INSTALL POWER WINDOW REGULATOR MASTER SWITCH ASSEMBLY**
   (a) Install the power window regulator master switch with the 3 screws.
2. **INSTALL FRONT ARMREST BASE UPPER PANEL (See page WS-27)**
3. **CONNECT CABLE TO NEGATIVE BATTERY TERMINAL**
   Torque: 3.9 N*m (40 kgf*cm, 35 in.*lbf)

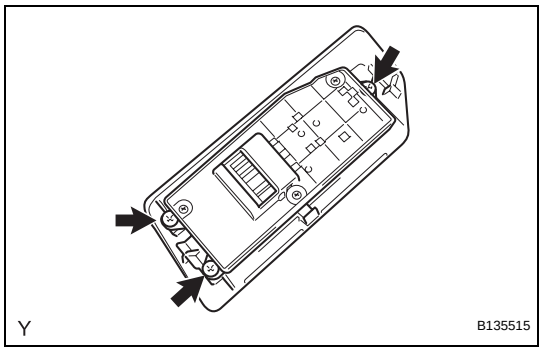

DL

DOOR CONTROL SWITCH (for Front Passenger Side)

COMPONENTS

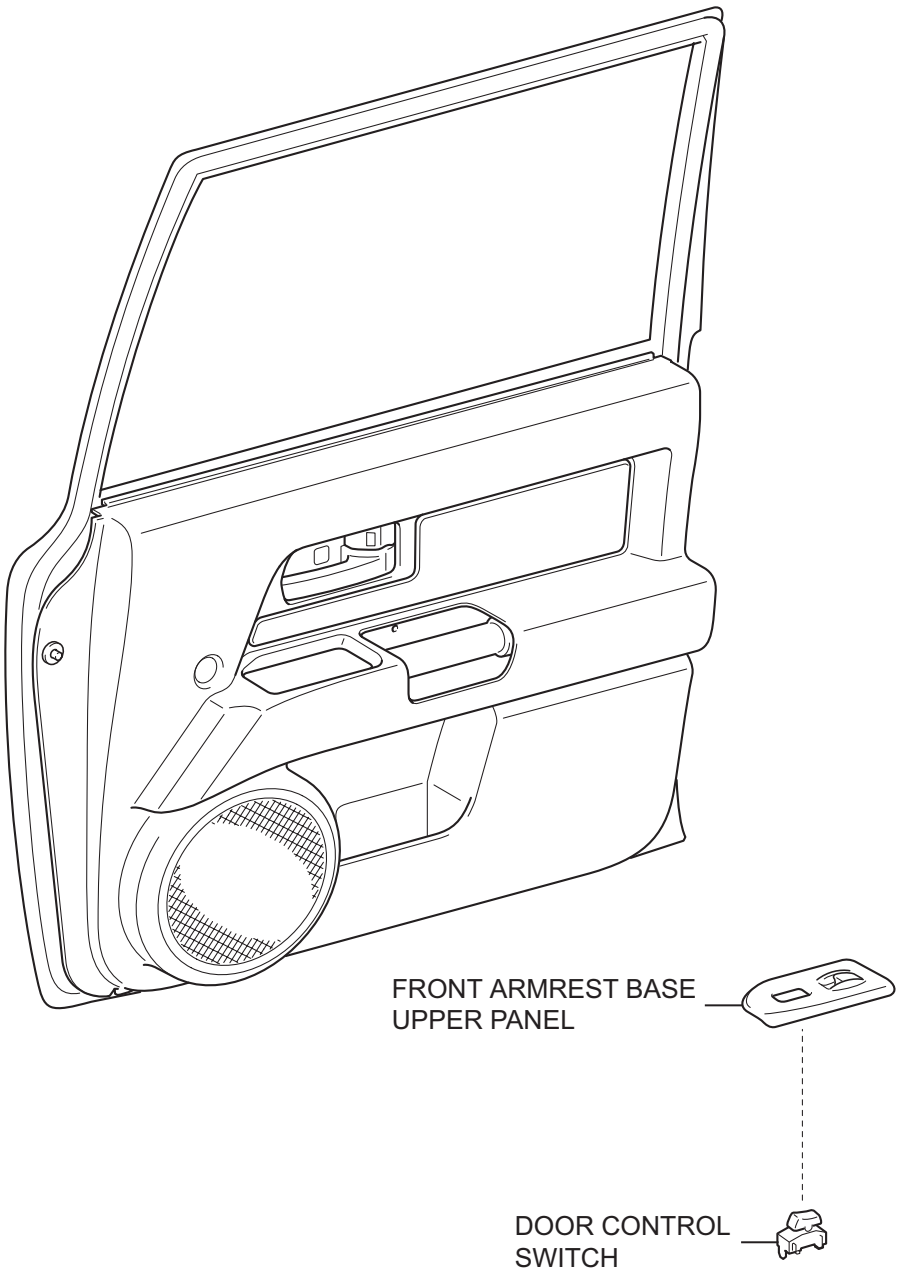

Y

B135948E01

REMOVAL

1. **DISCONNECT CABLE FROM NEGATIVE BATTERY TERMINAL**
2. **REMOVE FRONT ARMREST BASE UPPER PANEL (See page ED-9)**
3. **REMOVE DOOR CONTROL SWITCH**
   (a) Using a screwdriver with its tip wrapped in protective tape, disengage the 2 claws and remove the door control switch.

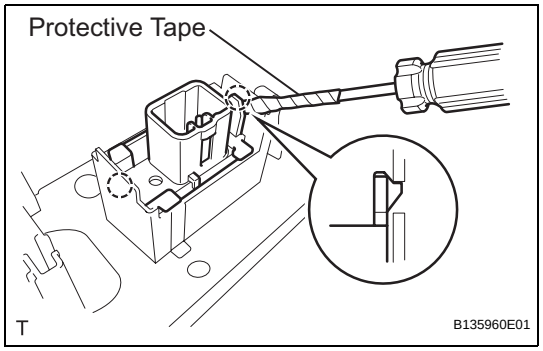

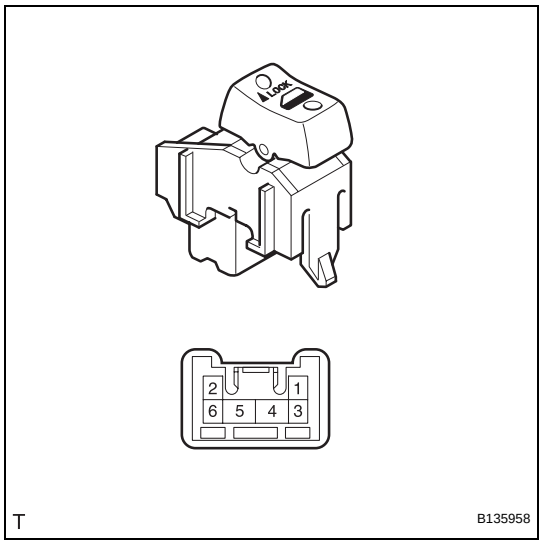

INSPECTION

1. **INSPECT DOOR CONTROL SWITCH**
   (a) Check the resistance.
      (1) Using an ohmmeter, measure the resistance and check the results in accordance with the value(s) in the table below.
      Standard Resistance

Tester Connection	Condition	Specified Condition
3 - 6	Locked	Below 1 Ω
3 - 6	Unlocked	10 kΩ or higher
3 - 5	Locked	10 kΩ or higher
3 - 5	Unlocked	Below 1 Ω

If the result is not as specified, replace the door control switch.

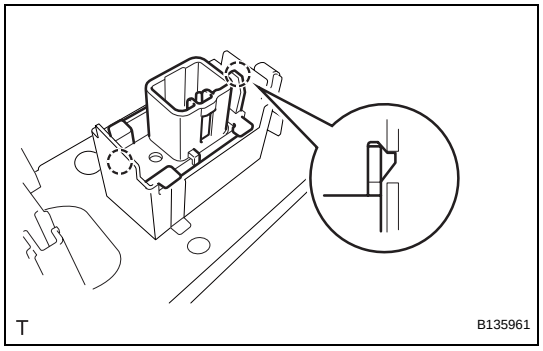

INSTALLATION

1. **INSTALL DOOR CONTROL SWITCH**
   (a) Engage the 2 claws and install the door control switch.
2. **INSTALL FRONT ARMREST BASE UPPER PANEL (See page ED-25)**
3. **CONNECT CABLE TO NEGATIVE BATTERY TERMINAL**
   Torque: 3.9 N*m (40 kgf*cm, 35 in.*lbf)

DL

UNLOCK WARNING SWITCH

COMPONENTS

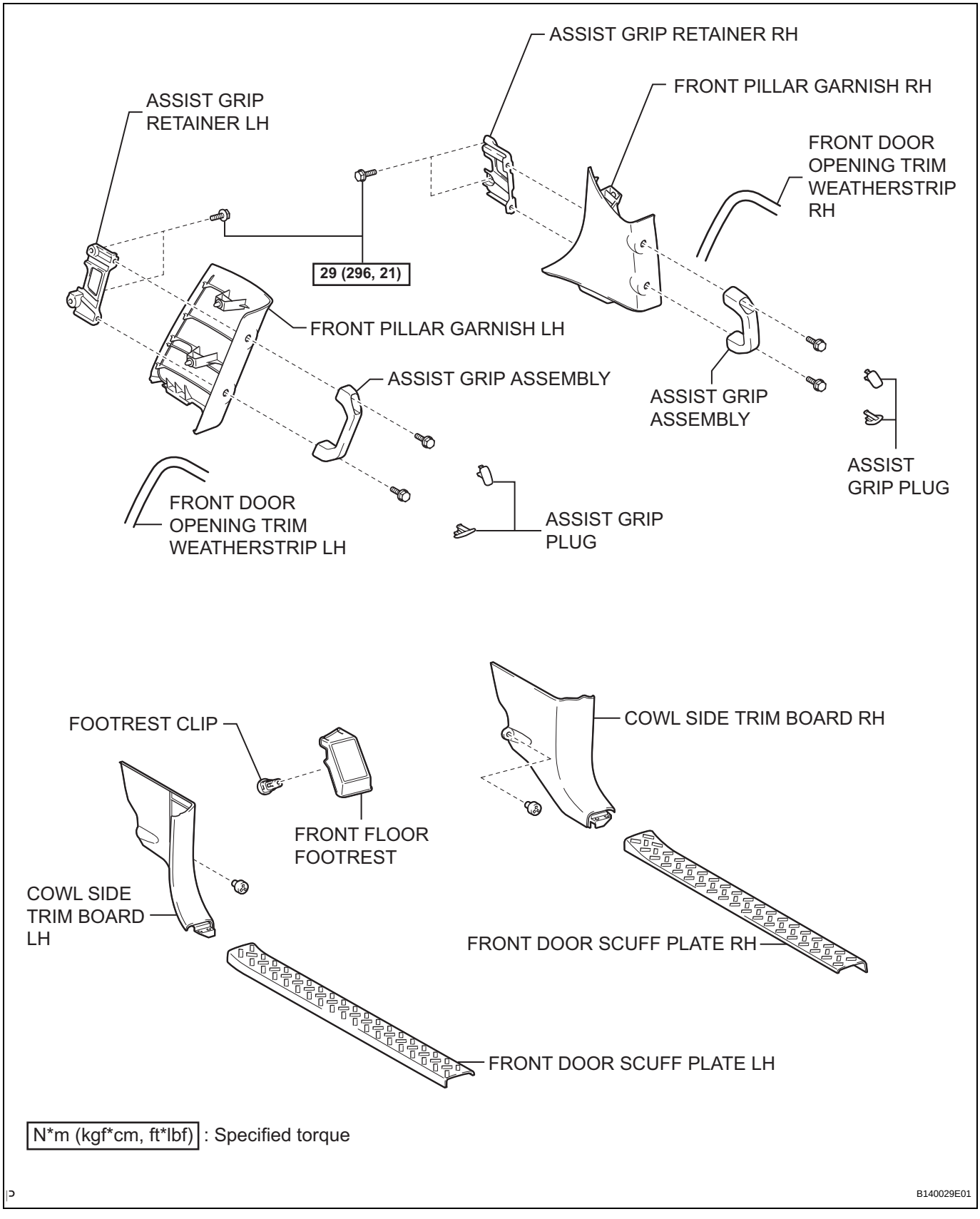

for Automatic Transmission 2WD:

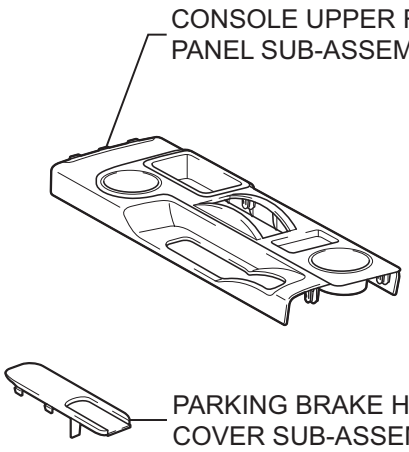

for Automatic Transmission 4WD:

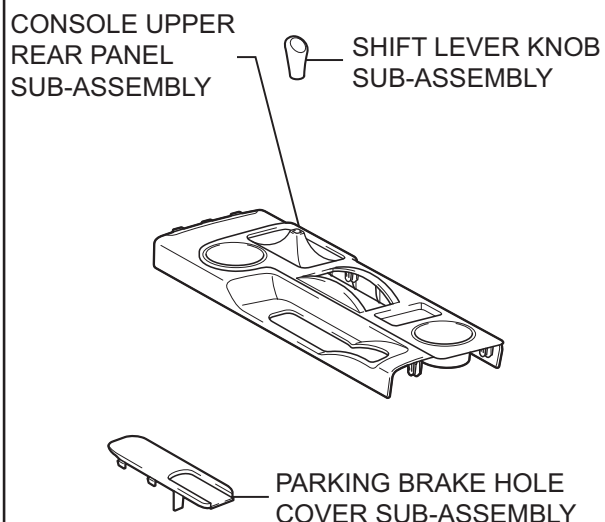

for Manual Transmission 4WD:

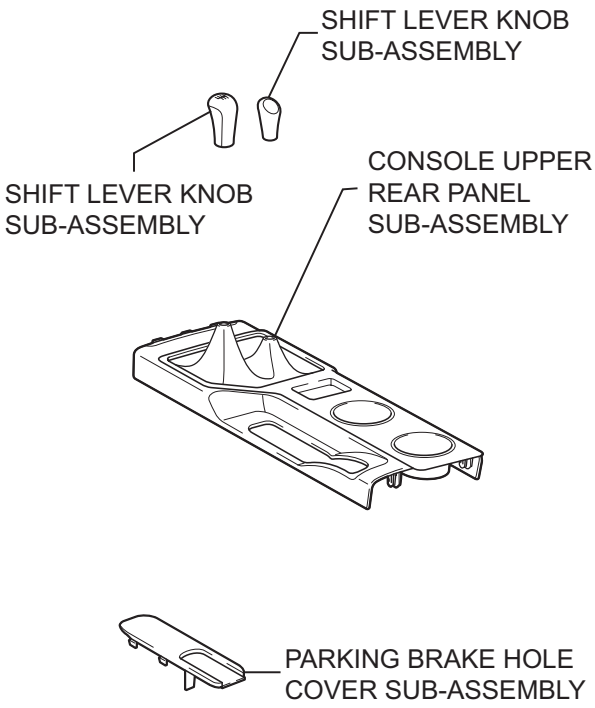

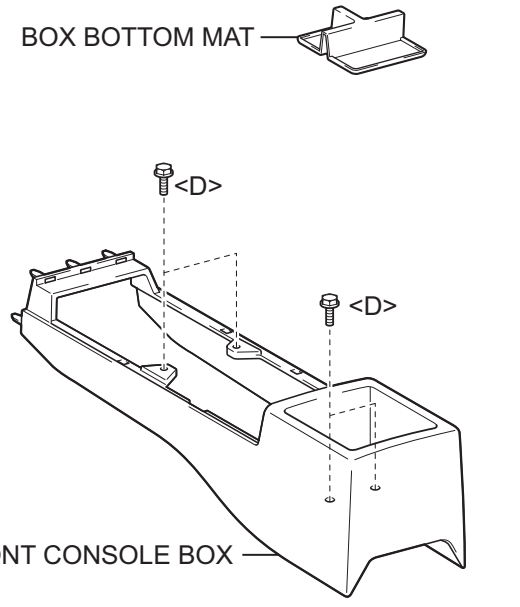

DL

P

B133844E01

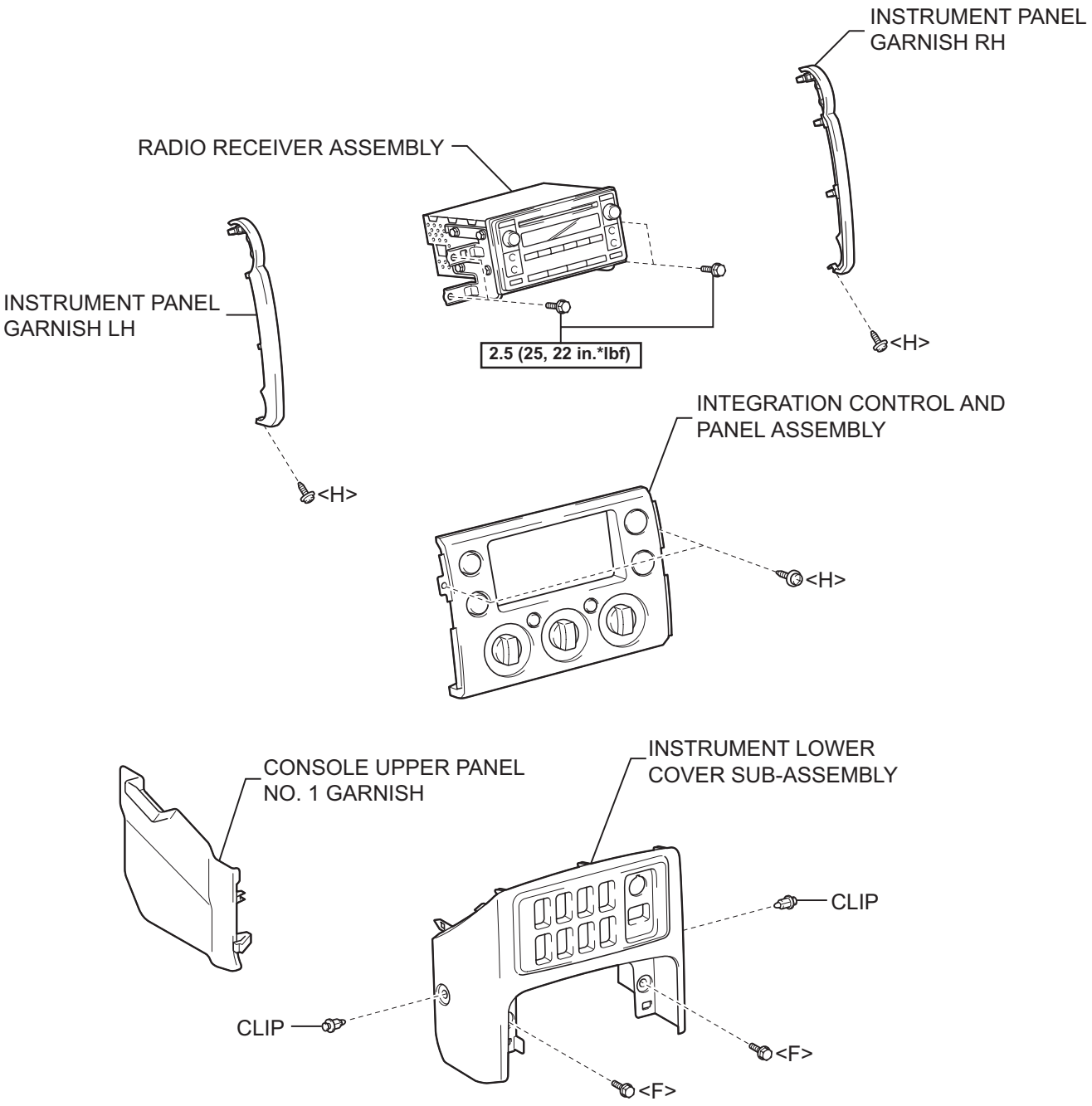

DL

N*m (kgf*cm, ft*lbf) : Specified torque

P

B133845E01

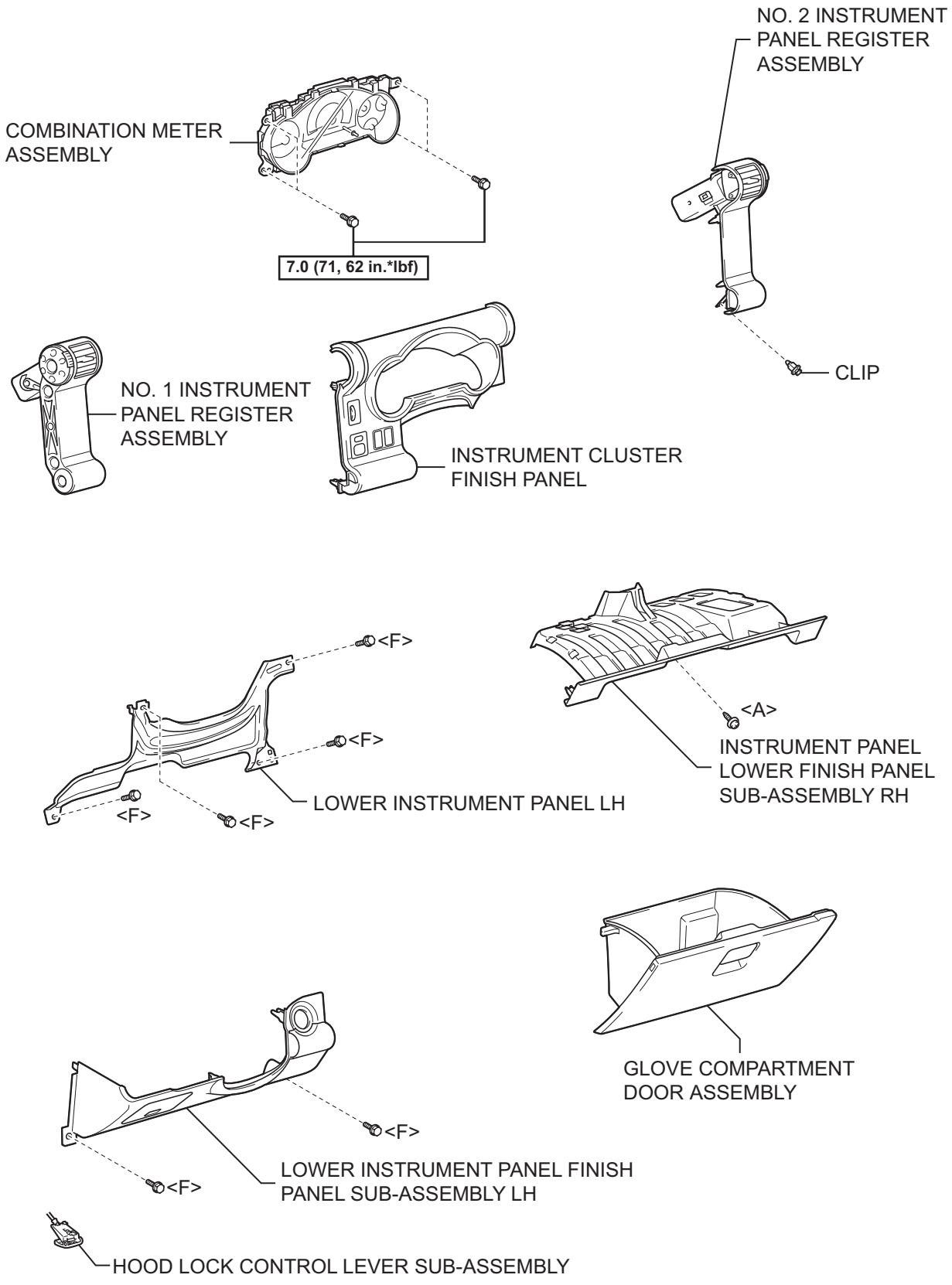

DL

N*m (kgf*cm, ft.*lbf) : Specified torque

P

B133846E03

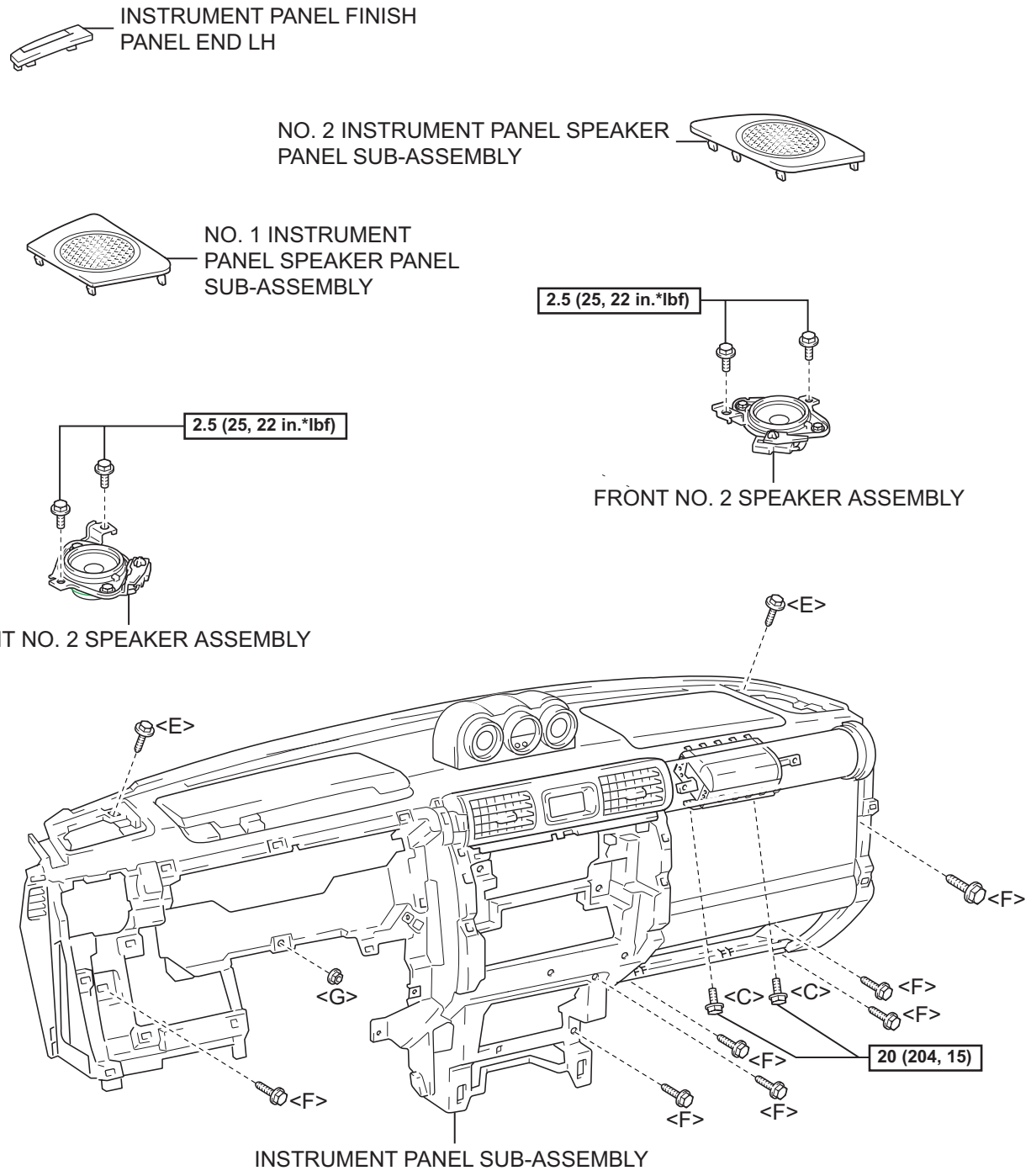

DL

N*m (kgf*cm, ft*lbf) : Specified torque

P

B133847E01

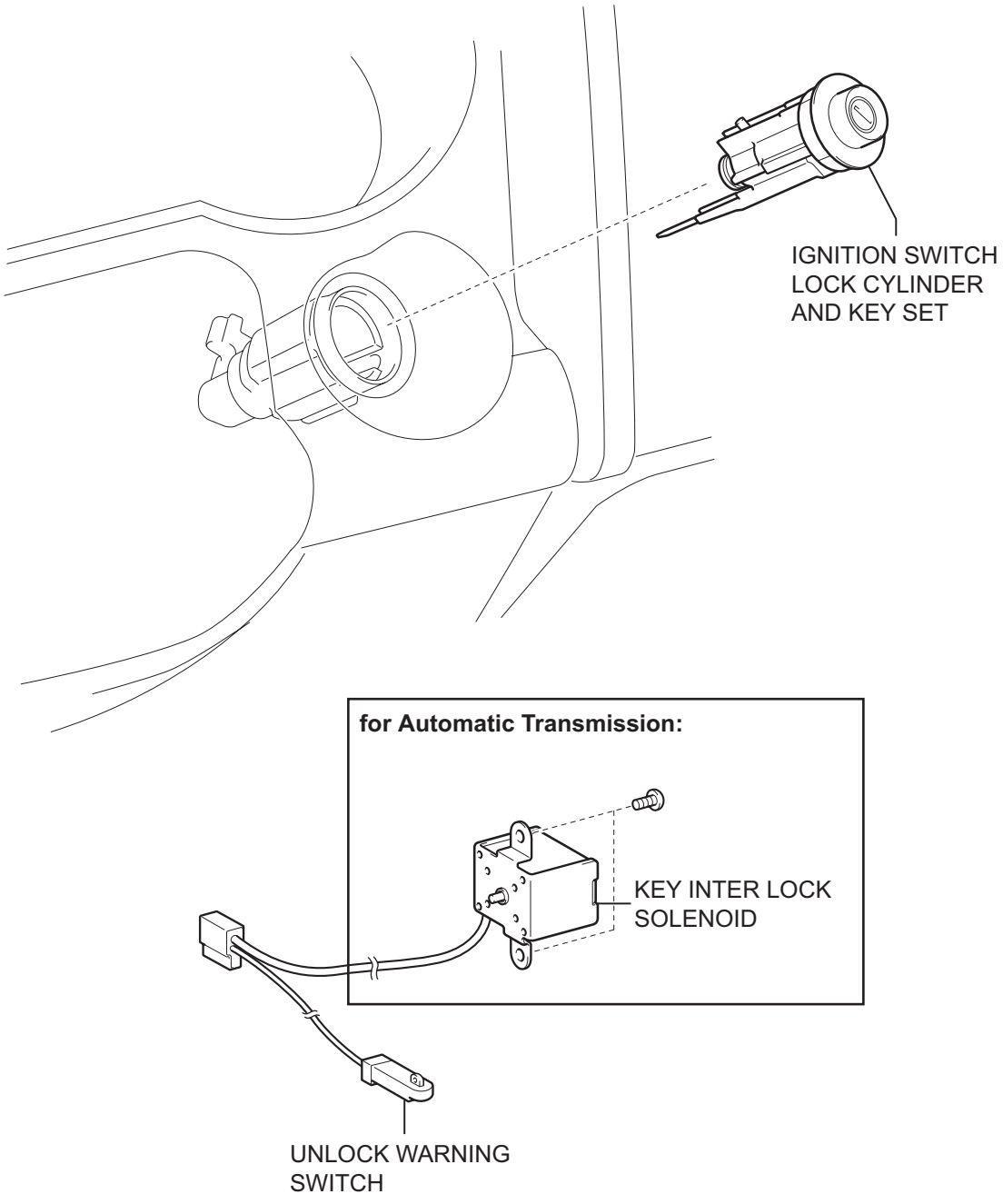

T

B135970E01

REMOVAL

1. DISCONNECT CABLE FROM NEGATIVE BATTERY TERMINAL
2. REMOVE FRONT DOOR SCUFF PLATE RH (See page IR-15)
3. REMOVE FRONT DOOR SCUFF PLATE LH (See page IR-15)
4. REMOVE FRONT FLOOR FOOTREST (See page IR-2)
5. REMOVE FOOTREST CLIP (See page IR-2)
6. REMOVE COWL SIDE TRIM BOARD RH (See page IR-15)
7. REMOVE COWL SIDE TRIM BOARD LH (See page IR-15)
8. REMOVE FRONT DOOR OPENING TRIM WEATHERSTRIP LH (See page IP-10)
9. REMOVE FRONT DOOR OPENING TRIM WEATHERSTRIP RH (See page IP-10)
10. REMOVE ASSIST GRIP PLUG (See page IR-17)
11. REMOVE ASSIST GRIP ASSEMBLY (See page IR-17)
12. REMOVE FRONT PILLAR GARNISH RH (See page IR-18)
13. REMOVE FRONT PILLAR GARNISH LH (See page IR-18)
14. REMOVE INSTRUMENT PANEL GARNISH LH (See page IP-10)
15. REMOVE INSTRUMENT PANEL GARNISH RH (See page IP-10)
16. REMOVE INTEGRATION CONTROL AND PANEL ASSEMBLY (See page IP-11)
17. REMOVE RADIO RECEIVER ASSEMBLY (See page AV-55)
18. REMOVE PARKING BRAKE HOLE COVER SUB-ASSEMBLY (See page IP-11)
19. REMOVE SHIFT LEVER KNOB SUB-ASSEMBLY (for Manual Transmission) (See page IP-11)
20. REMOVE SHIFT LEVER KNOB SUB-ASSEMBLY (for 4WD) (See page IP-11)
21. REMOVE CONSOLE UPPER REAR PANEL SUB-ASSEMBLY (See page IP-12)
22. REMOVE BOX BOTTOM MAT (See page IP-12)
23. REMOVE FRONT CONSOLE BOX (See page IP-12)
24. REMOVE CONSOLE UPPER PANEL NO. 1 GARNISH (See page IP-12)

25. **REMOVE INSTRUMENT LOWER COVER SUB-ASSEMBLY (See page IP-13)**
26. **REMOVE NO. 1 INSTRUMENT PANEL REGISTER ASSEMBLY (See page IP-13)**
27. **REMOVE HOOD LOCK CONTROL LEVER SUB-ASSEMBLY (See page IP-13)**
28. **REMOVE LOWER INSTRUMENT PANEL FINISH PANEL SUB-ASSEMBLY LH (See page IP-14)**
29. **REMOVE LOWER INSTRUMENT PANEL LH (See page IP-14)**
30. **REMOVE INSTRUMENT CLUSTER LOWER FINISH PANEL (See page IP-14)**
31. **REMOVE COMBINATION METER ASSEMBLY (See page IP-14)**
32. **REMOVE GLOVE COMPARTMENT DOOR ASSEMBLY (See page IP-15)**
33. **REMOVE INSTRUMENT PANEL LOWER FINISH PANEL SUB-ASSEMBLY RH (See page IP-15)**
34. **REMOVE NO. 2 INSTRUMENT PANEL REGISTER ASSEMBLY (See page IP-16)**
35. **REMOVE NO. 2 INSTRUMENT PANEL SPEAKER PANEL SUB-ASSEMBLY (See page IP-16)**
36. **REMOVE NO. 1 INSTRUMENT PANEL SPEAKER PANEL SUB-ASSEMBLY (See page IP-16)**
37. **REMOVE FRONT NO. 2 SPEAKER ASSEMBLY (See page AV-62)**
38. **REMOVE ASSIST GRIP RETAINER RH (See page IP-16)**
39. **REMOVE ASSIST GRIP RETAINER LH (See page IP-16)**
40. **DISCONNECT PASSENGER AIRBAG CONNECTOR (See page IP-16)**
41. **REMOVE INSTRUMENT PANEL SUB-ASSEMBLY (See page IP-16)**
42. **REMOVE INSTRUMENT PANEL FINISH PANEL END LH (See page IP-21)**
43. **REMOVE IGNITION SWITCH LOCK CYLINDER AND KEY SET**
    (a) Turn the ignition switch lock cylinder to the ACC position.
    (b) Push down the stop pin with a screwdriver and pull out the ignition switch lock cylinder.

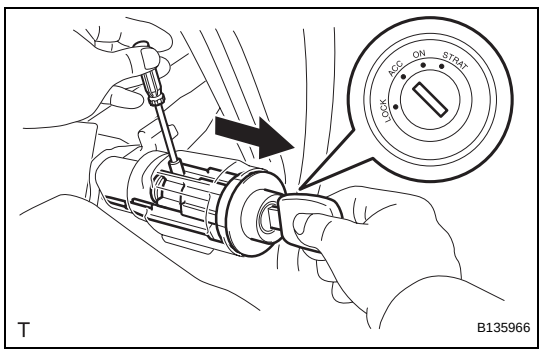

DL

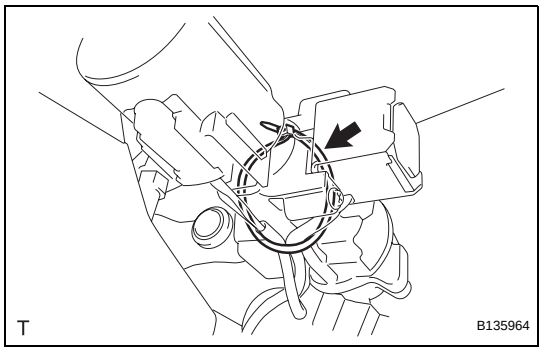

44. REMOVE KEY INTER LOCK SOLENOID (for Automatic Transmission)

(a) Disconnect the clamp from the steering column bracket upper.

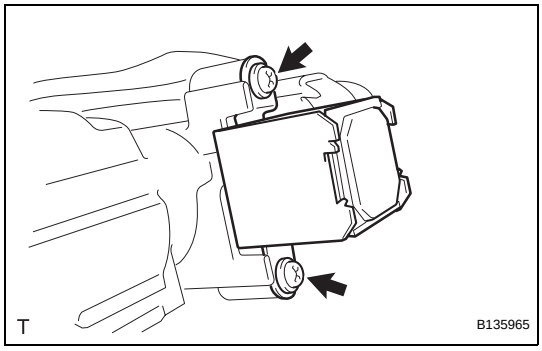

(b) Remove the 2 screws and the key inter lock solenoid.

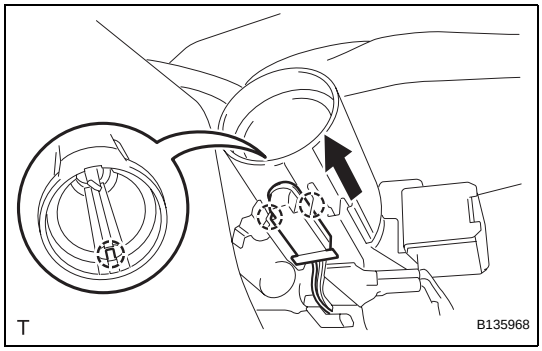

45. REMOVE UNLOCK WARNING SWITCH

(a) Disconnect the connector.

(b) Remove the unlock warning switch toward the rear of the vehicle by pushing up the center part.

DL

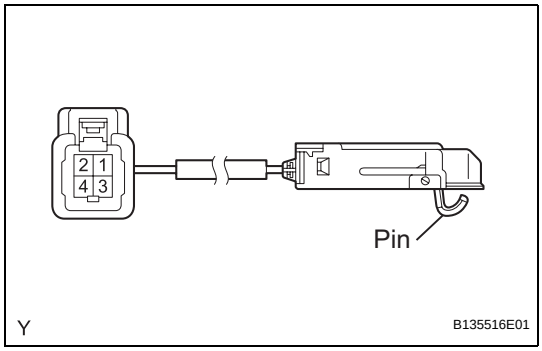

INSPECTION

1. INSPECT UNLOCK WARNING SWITCH

(a) Check the resistance.

(1) Using an ohmmeter, measure the resistance and check the results in accordance with the value(s) in the table below.

Standard Resistance

Tester Connection	Condition	Specified Condition
1 - 2	Pin released	10 kΩ or higher
1 - 2	Pin pushed in	Below 1 Ω

If the result is not as specified, replace the unlock warning switch.

INSTALLATION

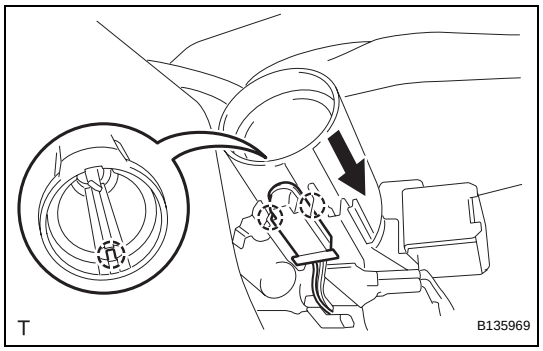

1. **INSTALL UNLOCK WARNING SWITCH**
   (a) Install the unlock warning switch onto the steering column bracket upper.
   (b) Connect the connector.

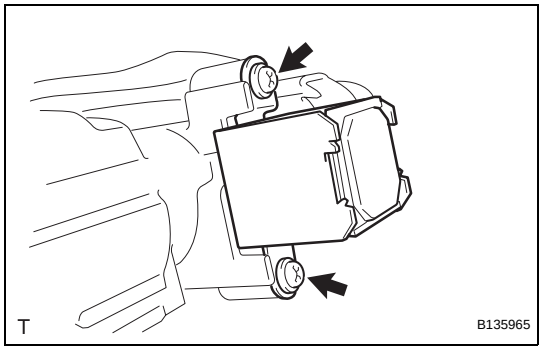

2. **INSTALL KEY INTER LOCK SOLENOID (for Automatic Transmission)**
   (a) Install the key inter lock solenoid with the 2 screws.

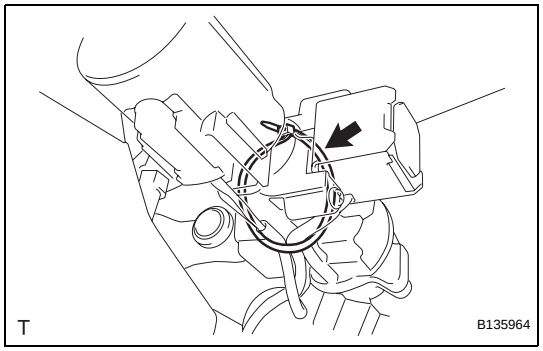

   (b) Install the clamp onto the steering column bracket upper.

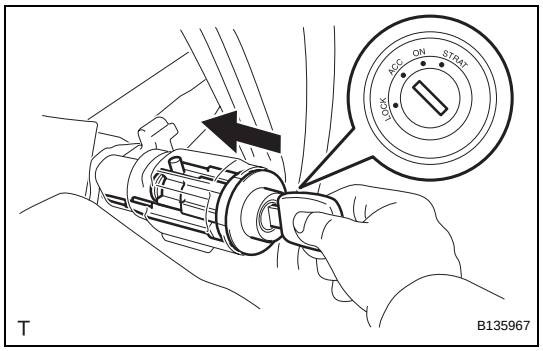

3. **INSTALL IGNITION SWITCH LOCK CYLINDER AND KEY SET**
   (a) Make sure that the ignition switch lock cylinder is in the ACC position.
   (b) Install the ignition switch lock cylinder.
4. **INSTALL INSTRUMENT PANEL SUB-ASSEMBLY (See page IP-26)**
5. **CONNECT PASSENGER AIRBAG CONNECTOR (See page IP-26)**
6. **REMOVE INSTRUMENT PANEL FINISH PANEL END LH (See page IP-27)**
7. **INSTALL ASSIST GRIP RETAINER RH (See page IP-27)**
8. **INSTALL ASSIST GRIP RETAINER LH (See page IP-27)**
9. **INSTALL FRONT NO. 2 SPEAKER ASSEMBLY (See page AV-62)**

DL

10. INSTALL NO. 2 INSTRUMENT PANEL SPEAKER PANEL SUB-ASSEMBLY (See page IP-27)
11. INSTALL NO. 1 INSTRUMENT PANEL SPEAKER PANEL SUB-ASSEMBLY (See page IP-27)
12. INSTALL NO. 2 INSTRUMENT PANEL REGISTER ASSEMBLY (See page IP-27)
13. INSTALL INSTRUMENT PANEL LOWER FINISH PANEL SUB-ASSEMBLY RH (See page IP-28)
14. INSTALL GLOVE COMPARTMENT DOOR ASSEMBLY (See page IP-28)
15. INSTALL COMBINATION METER ASSEMBLY (See page IP-28)
16. INSTALL INSTRUMENT CLUSTER LOWER FINISH PANEL (See page IP-29)
17. INSTALL LOWER INSTRUMENT PANEL LH (See page IP-29)
18. INSTALL LOWER INSTRUMENT PANEL FINISH PANEL SUB-ASSEMBLY LH (See page IP-29)
19. CONNECT HOOD LOCK CONTROL LEVER SUB-ASSEMBLY (See page IP-30)
20. INSTALL NO. 1 INSTRUMENT PANEL REGISTER ASSEMBLY (See page IP-30)
21. INSTALL INSTRUMENT LOWER COVER SUB-ASSEMBLY (See page IP-30)
22. INSTALL CONSOLE UPPER PANEL NO. 1 GARNISH (See page IP-31)
23. INSTALL FRONT CONSOLE BOX ASSEMBLY (See page IP-31)
24. INSTALL BOX BOTTOM MAT (See page IP-31)
25. INSTALL CONSOLE UPPER REAR PANEL SUB-ASSEMBLY (See page IP-31)
26. INSTALL SHIFT LEVER KNOB SUB-ASSEMBLY (for 4WD) (See page IP-32)
27. INSTALL SHIFT LEVER KNOB SUB-ASSEMBLY (for Manual Transmission) (See page IP-32)
28. INSTALL PARKING BRAKE HOLE COVER SUB-ASSEMBLY (See page IP-32)
29. INSTALL RADIO RECEIVER ASSEMBLY (See page AV-56)
30. INSTALL INTEGRATION CONTROL AND PANEL ASSEMBLY (See page IP-32)
31. INSTALL INSTRUMENT PANEL GARNISH LH (See page IP-33)

32. **INSTALL INSTRUMENT PANEL GARNISH RH (See page IP-33)**
33. **INSTALL FRONT PILLAR GARNISH RH (See page IR-43)**
34. **INSTALL FRONT PILLAR GARNISH LH (See page IR-43)**
35. **INSTALL ASSIST GRIP ASSEMBLY (See page IR-43)**
36. **INSTALL ASSIST GRIP PLUG (See page IR-44)**
37. **INSTALL FRONT DOOR OPENING TRIM WEATHERSTRIP LH (See page IP-33)**
38. **INSTALL FRONT DOOR OPENING TRIM WEATHERSTRIP RH (See page IP-33)**
39. **INSTALL COWL SIDE TRIM BOARD RH (See page IR-45)**
40. **INSTALL COWL SIDE TRIM BOARD LH (See page IR-45)**
41. **INSTALL FOOTREST CLIP (See page IR-2)**
42. **INSTALL FRONT FLOOR FOOTREST (See page IR-2)**
43. **INSTALL FRONT DOOR SCUFF PLATE RH (See page IR-45)**
44. **INSTALL FRONT DOOR SCUFF PLATE LH (See page IR-45)**
45. **CONNECT CABLE TO NEGATIVE BATTERY TERMINAL**
    Torque: 3.9 N*m (40 kgf*cm, 35 in.*lbf)
46. **INSPECT SRS WARNING LIGHT**
    (See page RS-29)

FRONT DOOR LOCK

COMPONENTS

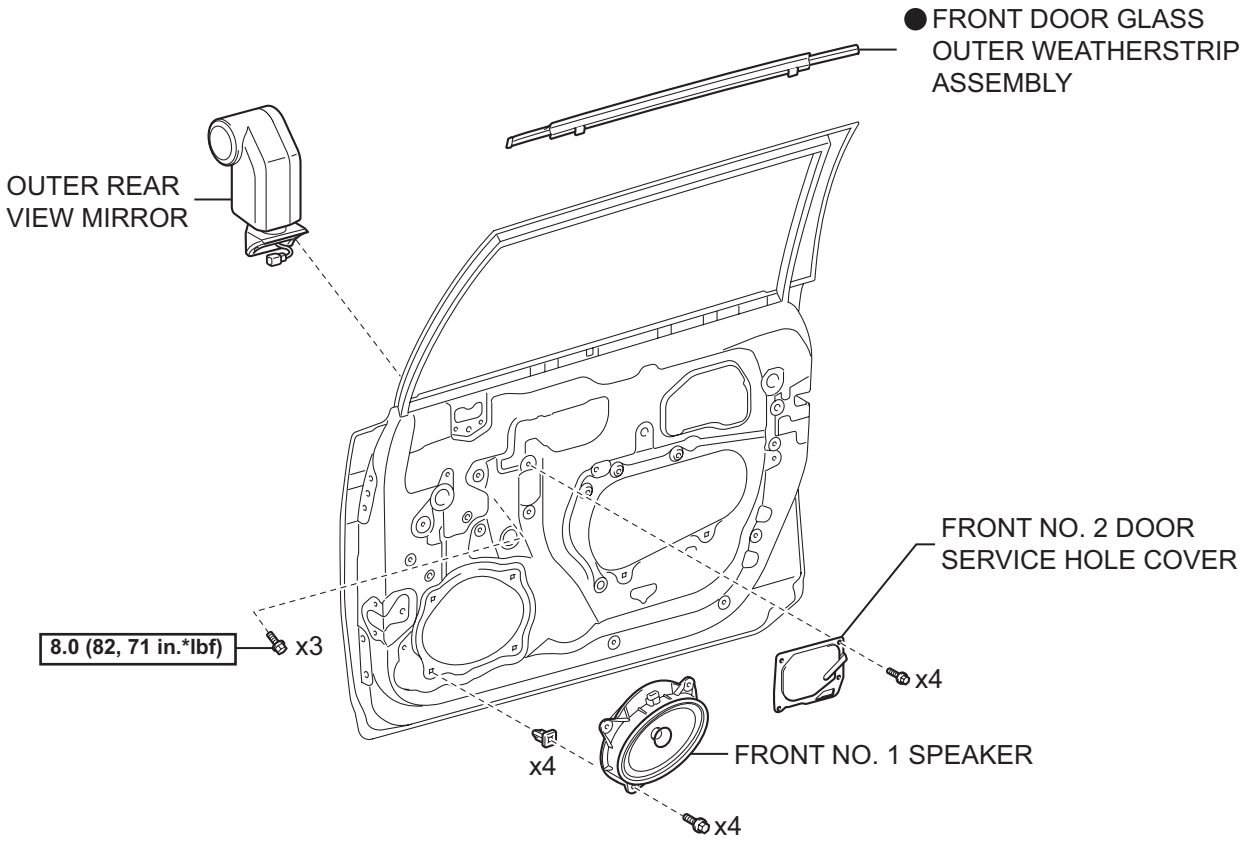

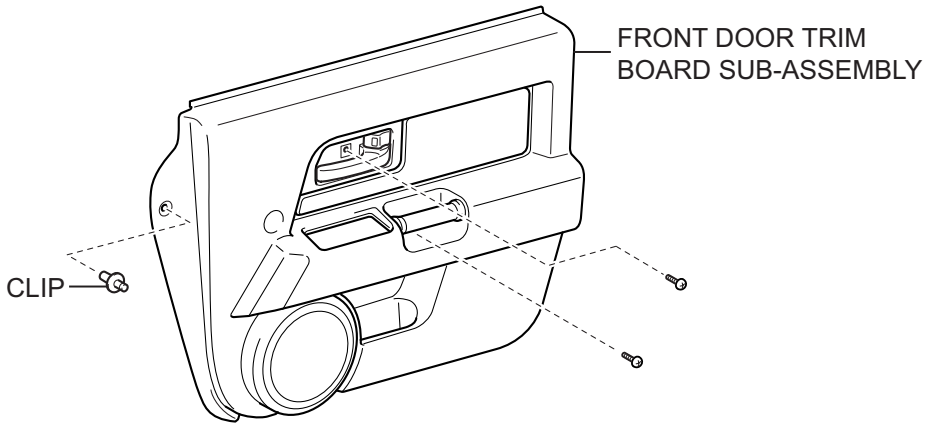

FRONT ARMREST BASE UPPER PANEL

N*m (kgf*cm, ft*lbf) : Specified torque

● Non-reusable part

Y

B138144E01

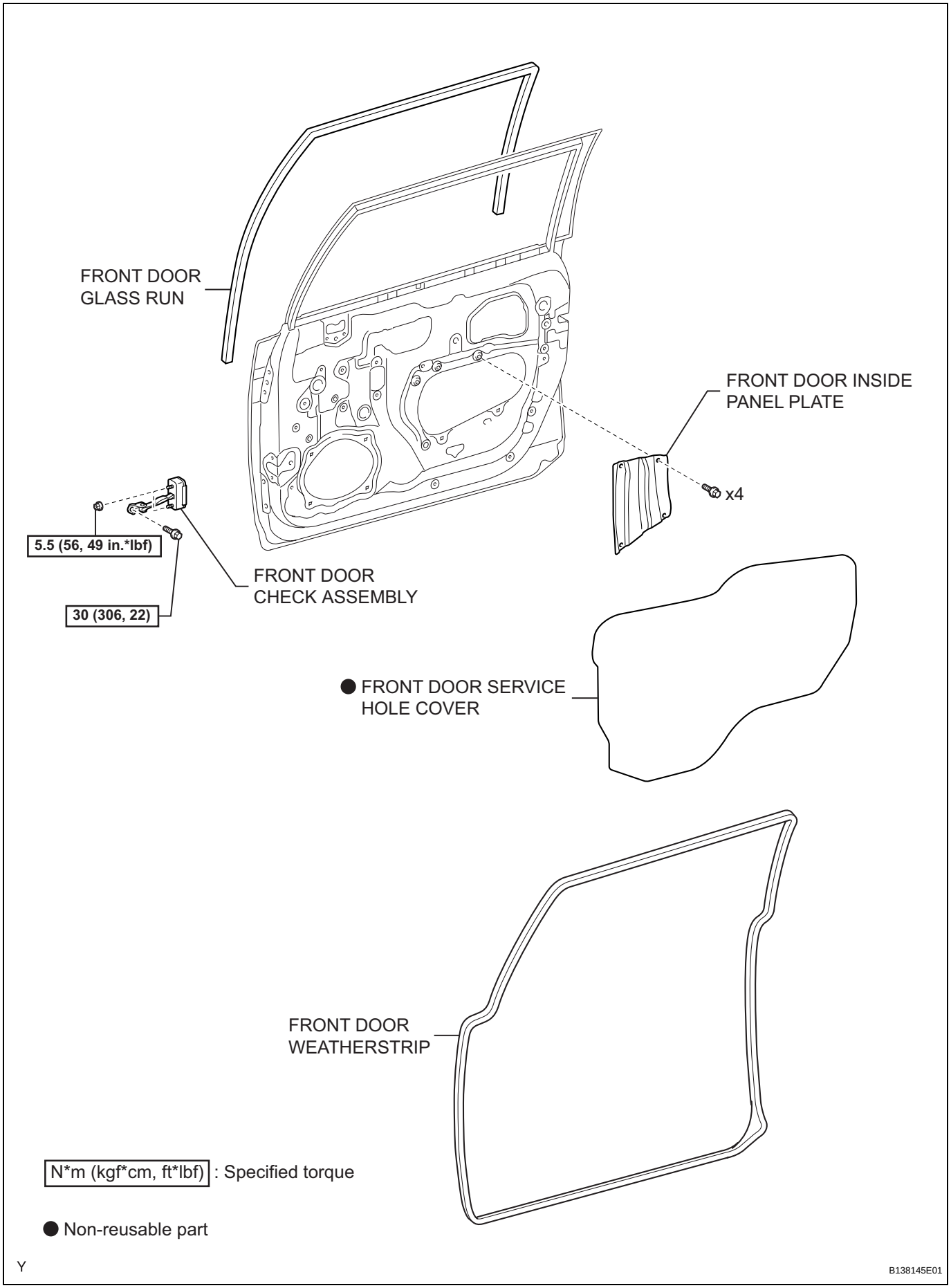
FRONT DOOR
GLASS RUN
FRONT DOOR INSIDE
PANEL PLATE
x4
5.5 (56, 49 in.*lbf)
30 (306, 22)
FRONT DOOR
CHECK ASSEMBLY
● FRONT DOOR SERVICE
HOLE COVER
FRONT DOOR
WEATHERSTRIP
N*m (kgf*cm, ft*lbf) : Specified torque
● Non-reusable part
Y
B138145E01

DL

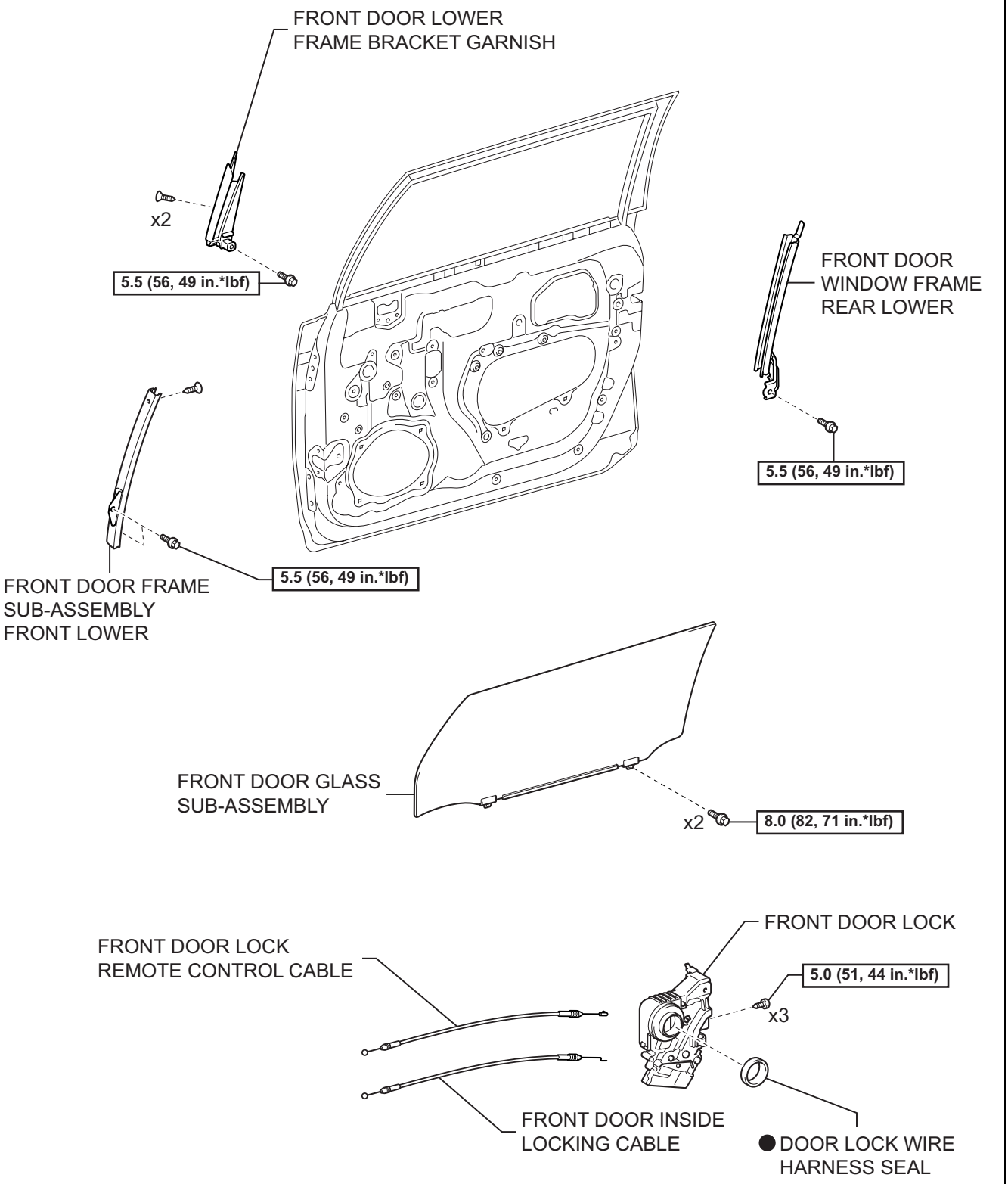

DL

N*m (kgf*cm, ft*lbf) : Specified torque

● Non-reusable part

Y

B138146E01

REMOVAL

HINT:

- Use the same procedure for both the RH and LH sides.
- The procedure described below is for the RH side.

1. **DISCONNECT CABLE FROM NEGATIVE BATTERY TERMINAL**
2. **REMOVE FRONT ARMREST BASE UPPER PANEL (See page ED-9)**
3. **REMOVE FRONT DOOR TRIM BOARD SUB-ASSEMBLY (See page ED-9)**
4. **REMOVE FRONT NO. 2 DOOR SERVICE HOLE COVER (See page ED-10)**
5. **REMOVE OUTER REAR VIEW MIRROR (See page MI-8)**
6. **REMOVE FRONT DOOR GLASS OUTER WEATHERSTRIP ASSEMBLY (See page ET-39)**
7. **REMOVE FRONT NO. 1 SPEAKER (See page AV-58)**
8. **REMOVE FRONT DOOR SERVICE HOLE COVER (See page ED-11)**
9. **REMOVE FRONT DOOR INSIDE PANEL PLATE (See page ED-11)**
10. **REMOVE FRONT DOOR CHECK ASSEMBLY (See page ED-11)**
11. **REMOVE FRONT DOOR WEATHERSTRIP (See page ED-11)**
12. **REMOVE FRONT DOOR GLASS RUN (See page ED-12)**
13. **REMOVE FRONT DOOR FRAME SUB-ASSEMBLY FRONT LOWER (See page ED-12)**
14. **REMOVE FRONT DOOR LOWER FRAME BRACKET GARNISH (See page ED-12)**
15. **REMOVE FRONT DOOR WINDOW FRAME REAR LOWER (See page ED-12)**
16. **REMOVE FRONT DOOR GLASS SUB-ASSEMBLY (See page ED-13)**
17. **REMOVE FRONT DOOR LOCK**
    (a) Using "Torx" socket wrench T30, loosen the 3 screws.
    (b) Move the front door lock downward, remove the outside handle frame link and remove the front door lock.

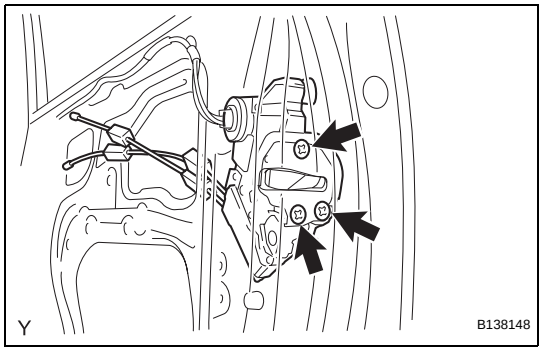

DL

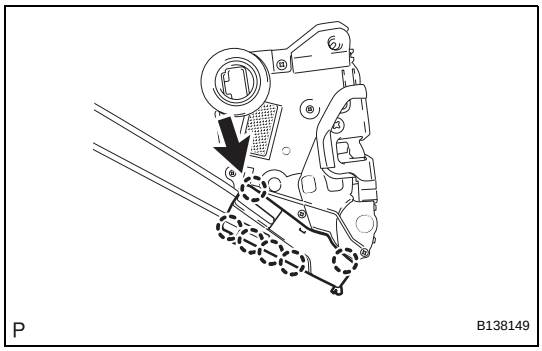

(c) Disengage the 5 claws and open the cover.

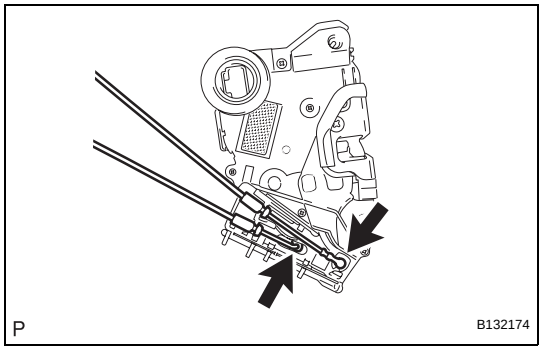

(d) Disconnect the front door lock remote control cable and the front door inside locking cable.
(e) Remove the door lock wire harness seal.

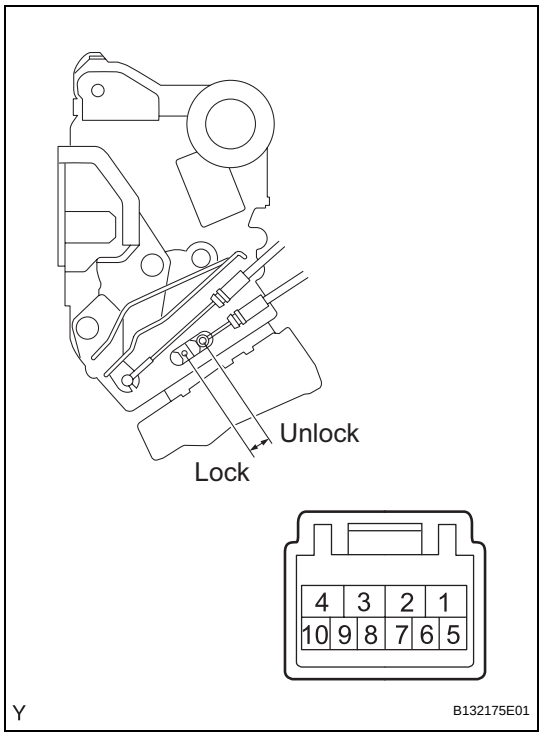

INSPECTION

1. INSPECT FRONT DOOR LOCK LH

(a) Check the operation.
(1) Apply battery voltage to the front door lock and check the operation of the front door lock motor.

Standard

Measurement Condition	Specified Condition
Battery positive (+) → Terminal 4 Battery negative (-) → Terminal 2	Locks
Battery positive (+) → Terminal 2 Battery negative (-) → Terminal 4	Unlocks

If the result is not as specified, replace the front door lock.

(b) Check the resistance of the unlock detection switch.
(1) Using an ohmmeter, measure the resistance and check the results in accordance with the value(s) in the table below.

Standard Resistance

Tester Connection	Door Lock Condition	Specified Condition
7 - 8	Locked	10 kΩ or higher
7 - 8	Unlocked	Below 1 Ω

If the result is not as specified, replace the front door lock.

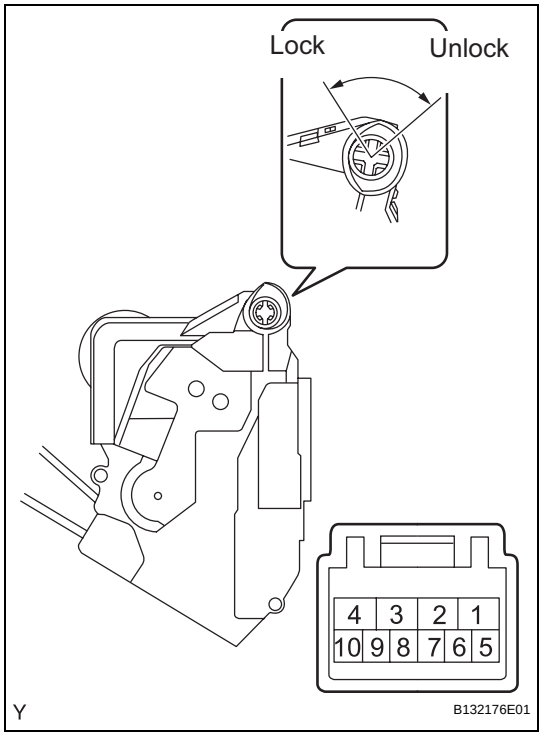

(c) Check the resistance of the door lock and unlock switch.

(1) Using an ohmmeter, measure the resistance and check the results in accordance with the value(s) in the table below.

Standard Resistance

Tester Connection	Door Lock Condition	Specified Condition
7 - 9	Locked	Below 1 Ω
7 - 9	Unlocked	10 kΩ or higher
7 - 10	Locked	10 kΩ or higher
7 - 10	Unlocked	Below 1 Ω

If the result is not as specified, replace the front door lock.

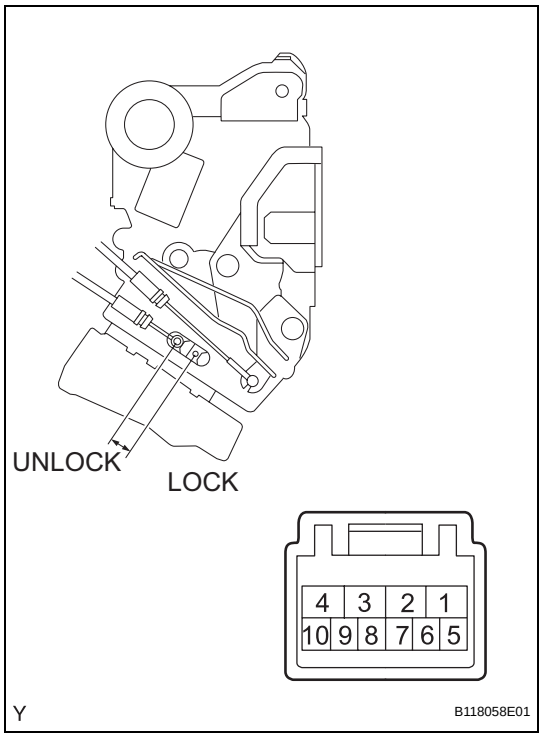

2. INSPECT FRONT DOOR LOCK RH

(a) Check the operation.

(1) Apply battery voltage to the front door lock and check the operation of the front door lock motor.

Standard

Measurement Condition	Specified Condition
Battery positive (+) → Terminal 3 Battery negative (-) → Terminal 1	Locks
Battery positive (+) → Terminal 1 Battery negative (-) → Terminal 3	Unlocks

If the result is not as specified, replace the front door lock.

(b) Check the resistance of the unlock detection switch.

(1) Using an ohmmeter, measure the resistance and check the results in accordance with the value(s) in the table below.

Standard Resistance

Tester Connection	Door Lock Condition	Specified Condition
7 - 8	Locked	10 kΩ or higher
7 - 8	Unlocked	Below 1 Ω

If the result is not as specified, replace the front door lock.

DL

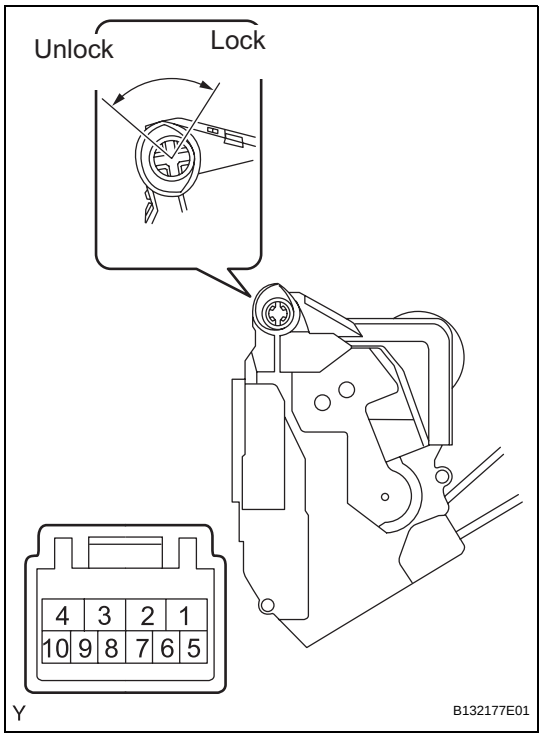

(c) Check the resistance of door lock and unlock switch.

(1) Using an ohmmeter, measure the resistance and check the results in accordance with the value(s) in the table below.

Standard Resistance

Tester Connection	Door Lock Condition	Specified Condition
6 - 8	Locked	Below 1 Ω
6 - 8	Unlocked	10 kΩ or higher
5 - 8	Locked	10 kΩ or higher
5 - 8	Unlocked	Below 1 Ω

If the result is not as specified, replace the front door lock.

INSTALLATION

1. **INSTALL FRONT DOOR LOCK**
   NOTICE:
   - **If reusing a door lock that has been removed, replace the packing in the connecting part with new.**
   - **Make sure that no grease or dirt adheres to the packing surface in the connecting part.**

   (a) Apply MP grease to the sliding and rotating areas of the front door lock.

   (b) Connect the front door lock remote control cable and the front door inside locking cable.

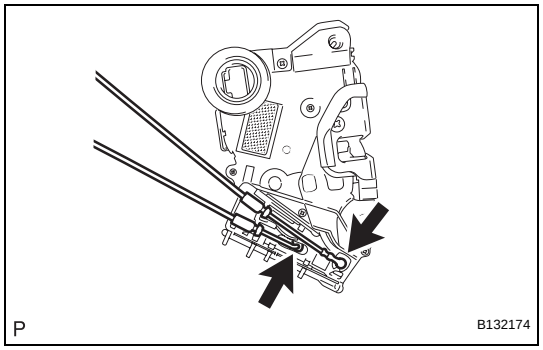

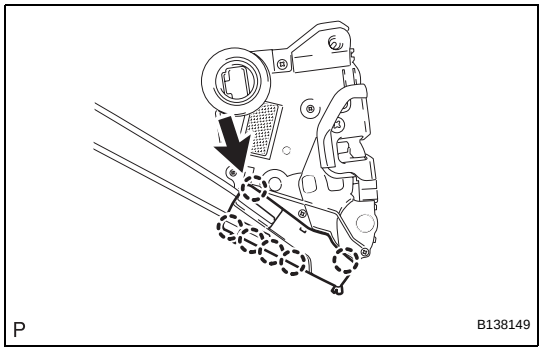

   (c) Engage the 5 claws and close the cover.

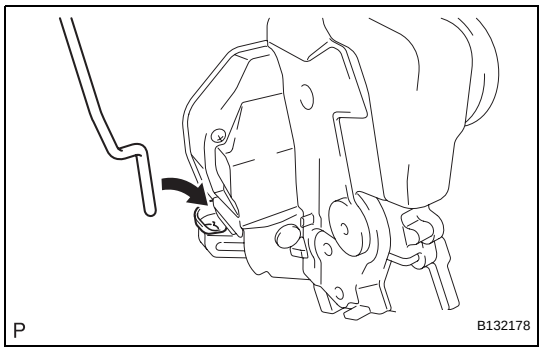

   (d) Insert the door lock open rod into the front door lock, then set it to the door panel.
   NOTICE:
   Make sure that the outside handle link is securely engaged with the door lock.

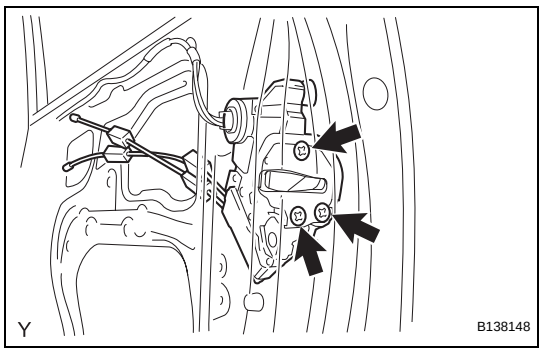

   (e) Apply adhesive to the threads of the screws.
   Adhesive:
   Toyota Genuine Adhesive 1324, Three Bond 1324 or the equivalent

   (f) Using "Torx" socket wrench T30, install the front door lock with the 3 screws.
   Torque: 5.0 N*m (51 kgf*cm, 44 in.*lbf)

2. **INSTALL FRONT DOOR GLASS SUB-ASSEMBLY**
   (See page ED-20)

DL

3. INSTALL FRONT DOOR WINDOW FRAME REAR LOWER (See page ED-21)
4. INSTALL FRONT DOOR LOWER FRAME BRACKET GARNISH (See page ED-21)
5. INSTALL FRONT DOOR FRAME SUB-ASSEMBLY FRONT LOWER (See page ED-21)
6. INSTALL FRONT DOOR GLASS RUN (See page ED-21)
7. INSTALL FRONT DOOR WEATHERSTRIP (See page ED-22)
8. INSTALL FRONT DOOR CHECK ASSEMBLY (See page ED-23)
9. INSTALL FRONT DOOR INSIDE PANEL PLATE (See page ED-23)
10. INSTALL FRONT DOOR SERVICE HOLE COVER (See page ED-11)
11. INSTALL FRONT NO. 1 SPEAKER (See page AV-58)
12. INSTALL FRONT DOOR GLASS OUTER WEATHERSTRIP ASSEMBLY (See page ET-40)
13. INSTALL OUTER REAR VIEW MIRROR (See page MI-11)
14. INSTALL FRONT NO. 2 DOOR SERVICE HOLE COVER (See page ED-24)
15. INSTALL FRONT DOOR TRIM BOARD SUB-ASSEMBLY (See page ED-24)
16. INSTALL FRONT ARMREST BASE UPPER PANEL (See page ED-25)
17. CONNECT CABLE TO NEGATIVE BATTERY TERMINAL
    Torque: 3.9 N*m (40 kgf*cm, 35 in.*lbf)

BACK DOOR LOCK

COMPONENTS

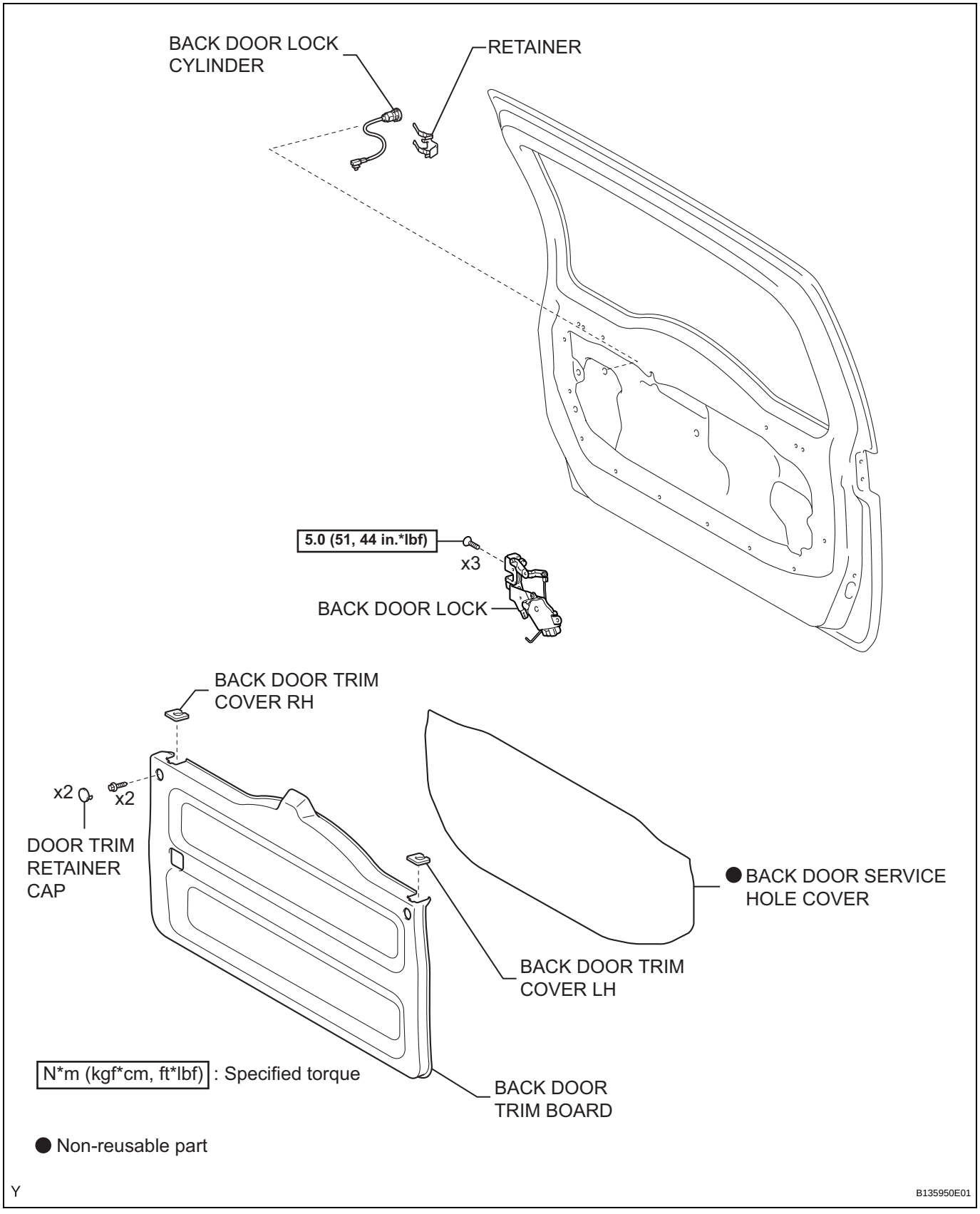

DL

REMOVAL

1. **DISCONNECT CABLE FROM NEGATIVE BATTERY TERMINAL**
2. **REMOVE BACK DOOR TRIM COVER RH (See page ED-48)**
3. **REMOVE BACK DOOR TRIM COVER LH**
   HINT:
   Use the same procedure as for the RH side.
4. **REMOVE DOOR TRIM RETAINER CAP (See page ED-48)**
5. **REMOVE BACK DOOR TRIM BOARD (See page ED-49)**
6. **REMOVE BACK DOOR SERVICE HOLE COVER (See page ED-49)**
7. **REMOVE BACK DOOR LOCK**
   (a) Disconnect the back door lock rod as shown in the illustration.
   (b) Disconnect the connector.

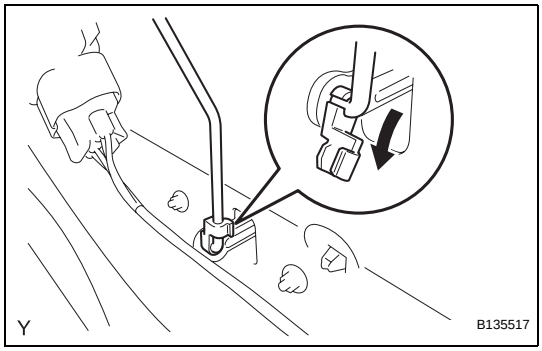

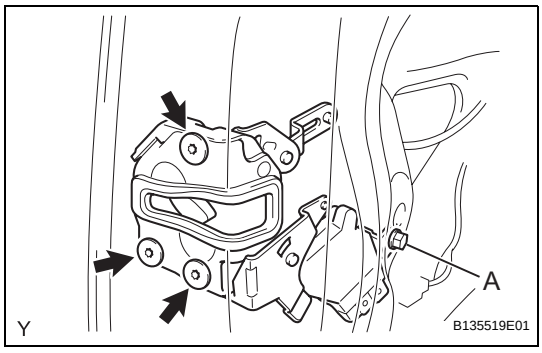

   (c) Loosen bolt A.
   (d) Using "Torx" socket wrench T30, remove the 3 screws and the back door lock.
   NOTICE:
   Do not drop or damage the back door lock when removing the screws.
   HINT:
   Remove the back door lock through the service hole.

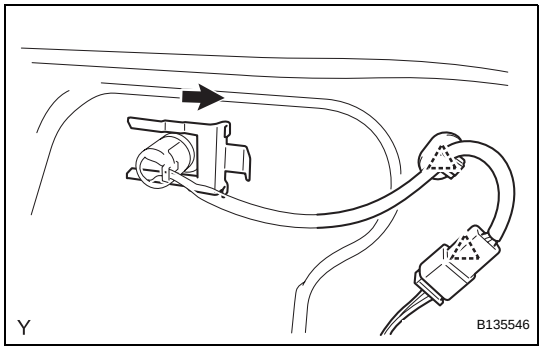

8. **REMOVE BACK DOOR LOCK CYLINDER**
   (a) Disconnect the connector and the 2 clamps, then remove the retainer.

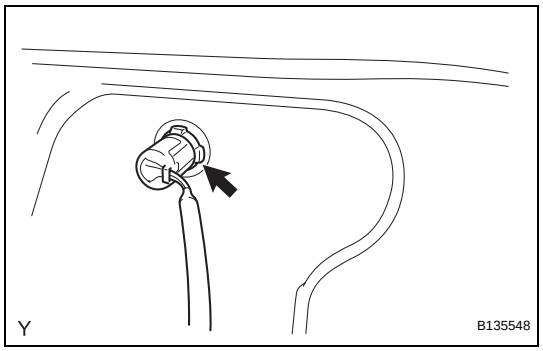

(b) Remove the back door lock cylinder.

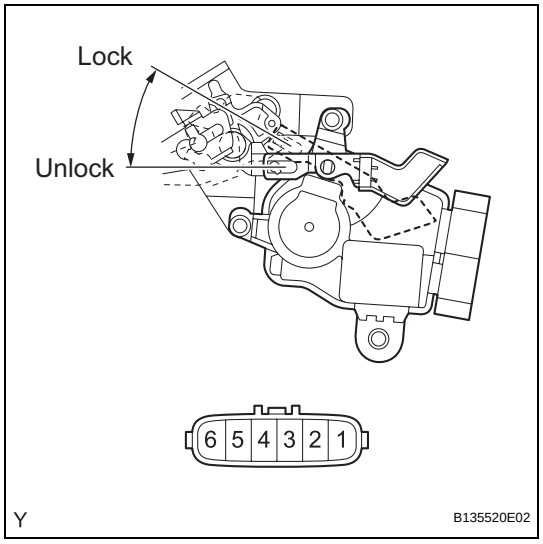

INSPECTION

1. INSPECT BACK DOOR LOCK

(a) Check the operation of the back door lock actuator.

(1) Apply battery voltage to the back door lock actuator and check the operation of the back door lock motor.

Standard

Measurement Condition	Specified Condition
Battery positive (+) → Terminal 2 Battery negative (-) → Terminal 1	Unlocks
Battery positive (+) → Terminal 1 Battery negative (-) → Terminal 2	Locks

If the result is not as specified, replace the back door lock.

(b) Check the resistance of the door lock and unlock switch.

(1) Using an ohmmeter, measure the resistance and check the results in accordance with the value(s) in the table below.

Standard Resistance

Tester Connection	Door Lock Condition	Specified Condition
4 - 5	Unlocked	Below 1 Ω
4 - 5	Locked	10 kΩ or higher
4 - 6	Unlocked	10 kΩ or higher
4 - 6	Locked	Below 1 Ω

If the result is not as specified, replace the back door lock.

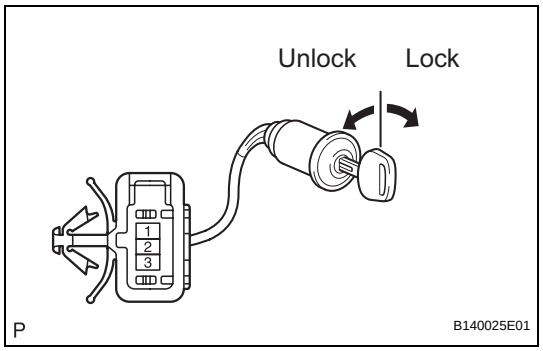

2. INSPECT BACK DOOR LOCK CYLINDER

(a) Check the resistance.

(1) Using an ohmmeter, measure the resistance between the terminals when the cylinder is operated with a key.

Standard Resistance

Tester Connection	Condition	Specified Condition
1 - 2	Locked	Below 1 Ω
1 - 2	Unlocked	10 kΩ or higher
1 - 3	Locked	10 kΩ or higher
1 - 3	Unlocked	Below 1 Ω

If the result is not as specified, replace the back door lock cylinder.

DL

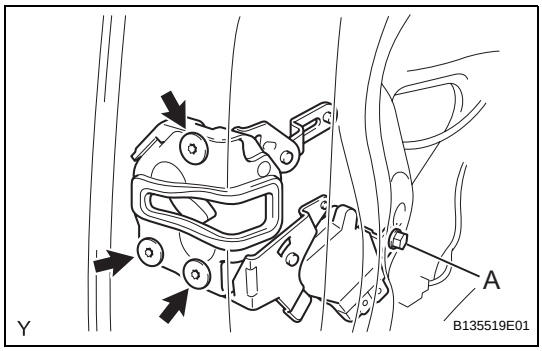

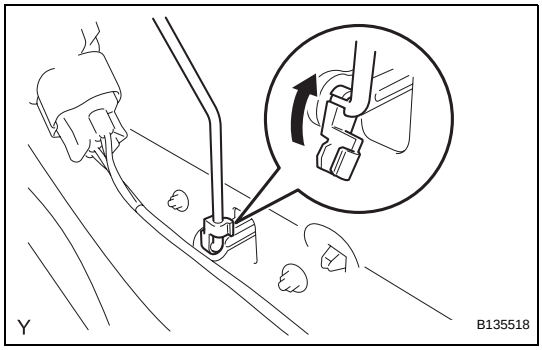

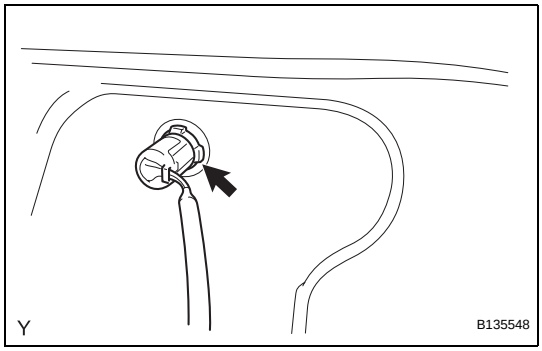

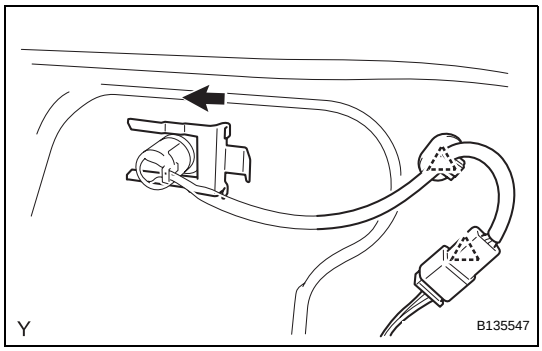

INSTALLATION

1. **INSTALL BACK DOOR LOCK**
   (a) Apply MP grease to the sliding and rotating areas of the back door lock.
   (b) Using "Torx" socket wrench T30, install the back door lock with the 3 screws.
   Torque: 5.0 N*m (51 kgf*cm, 44 in.*lbf)
   (c) Tighten bolt A.
   Torque: 5.0 N*m (51 kgf*cm, 44 in.*lbf)
   (d) Connect the connector.
   (e) Connect the back door lock rod as shown in the illustration.

2. **INSTALL BACK DOOR LOCK CYLINDER**
   (a) Install the back door lock cylinder.
   (b) Install the retainer, then connect the 2 clamps.

3. **INSTALL BACK DOOR SERVICE HOLE COVER (See page ED-56)**

4. **INSTALL BACK DOOR TRIM BOARD (See page ED-57)**

5. **INSTALL DOOR TRIM RETAINER CAP (See page ED-57)**

6. **INSTALL BACK DOOR TRIM COVER RH (See page ED-57)**

7. **INSTALL BACK DOOR TRIM COVER LH**
   HINT:
   Use the same procedure as for the RH side.

8. **CONNECT CABLE TO NEGATIVE BATTERY TERMINAL**
   Torque: 3.9 N*m (40 kgf*cm, 35 in.*lbf)

DL

WIRELESS DOOR LOCK BUZZER

COMPONENTS

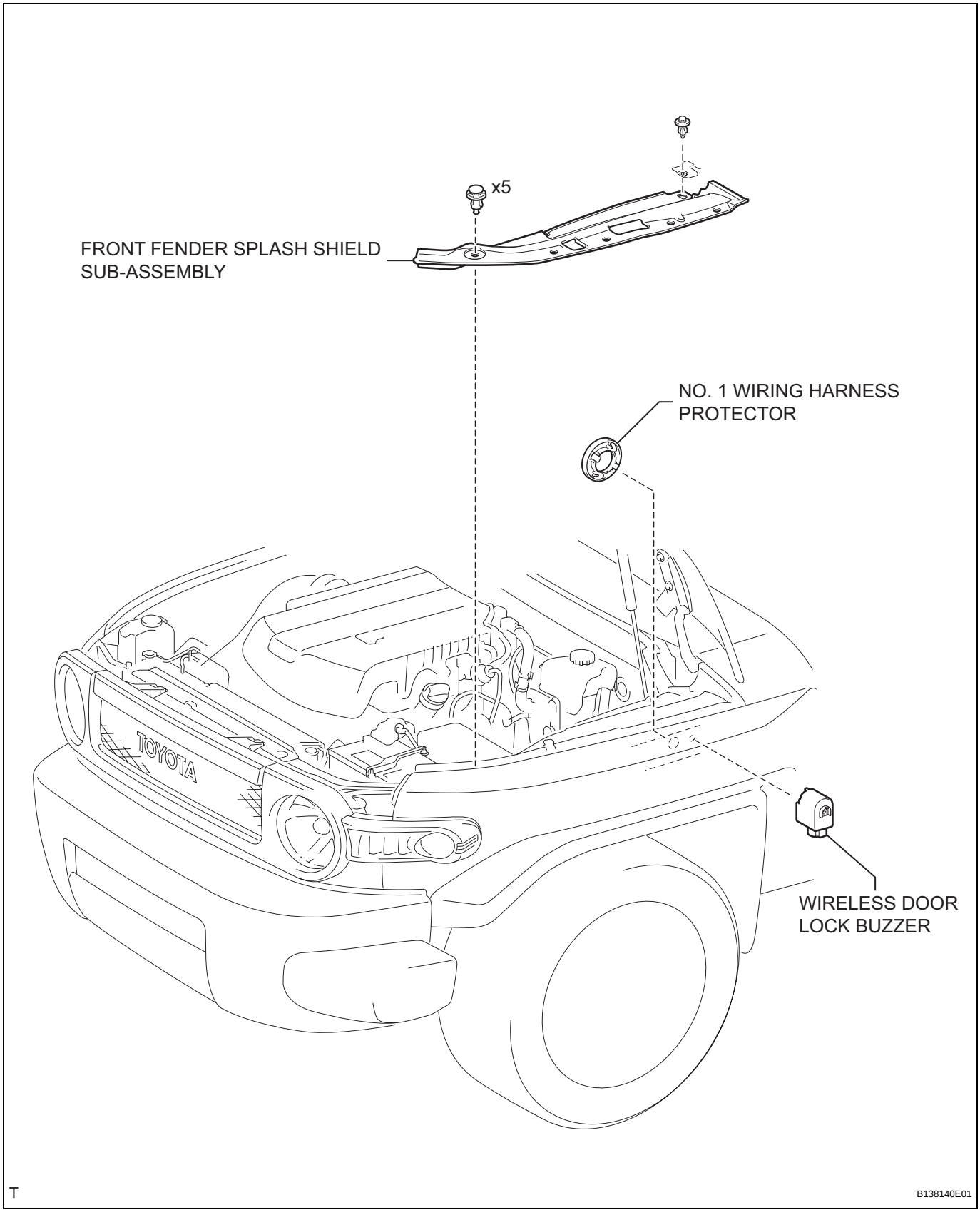

REMOVAL

1. DISCONNECT CABLE FROM NEGATIVE BATTERY TERMINAL

2. REMOVE FRONT FENDER SPLASH SHIELD SUB-ASSEMBLY

(a) Disengage the 6 clips.

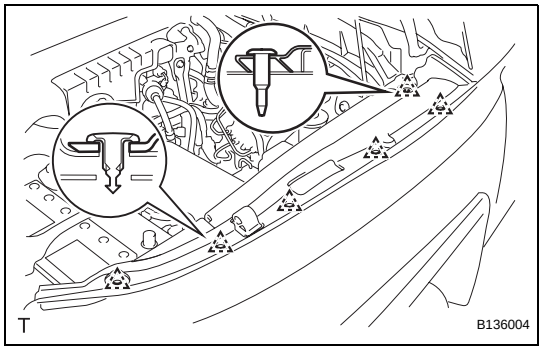

(b) Disengage the 3 clips and remove the front fender splash shield.

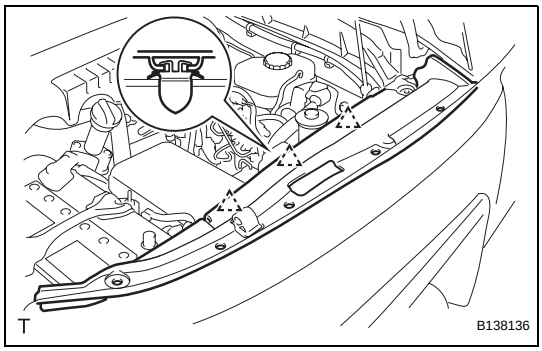

3. REMOVE NO. 1 WIRING HARNESS PROTECTOR

(a) Disengage the 4 claws and remove the No. 1 wiring harness protector.

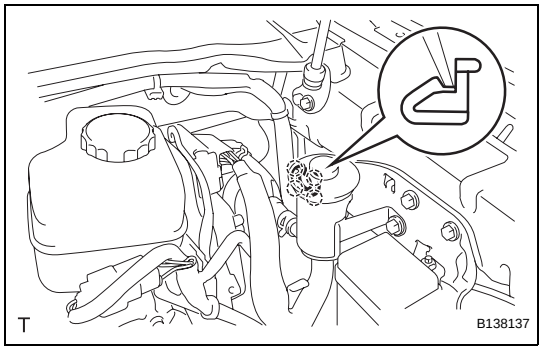

4. REMOVE WIRELESS DOOR LOCK BUZZER

(a) Disengage the clamp of the wireless door lock buzzer.

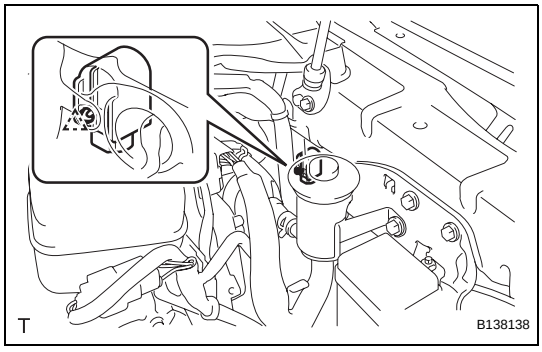

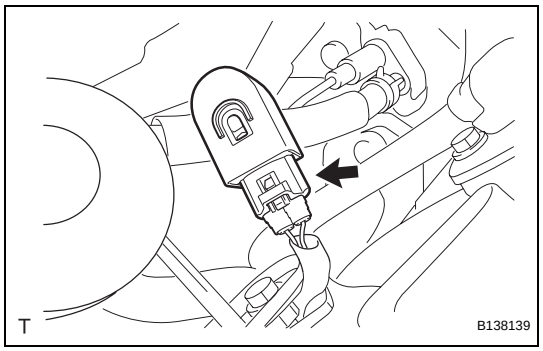

(b) Disconnect the connector and remove the wireless door lock buzzer.

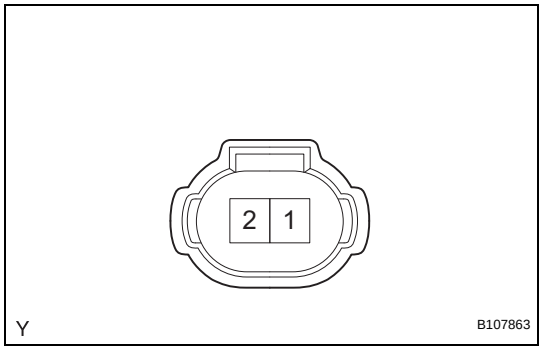

INSPECTION

1. INSPECT WIRELESS DOOR LOCK BUZZER

(a) Check the resistance.

(1) Using an ohmmeter, measure the resistance between the terminals.

Standard Resistance

Tester Connection	Specified Condition
1 (B) - 2 (B2)	Approximately 1 kΩ

If the result is not as specified, replace the wireless door lock buzzer.

INSTALLATION

1. INSTALL WIRELESS DOOR LOCK BUZZER

(a) Connect the connector.

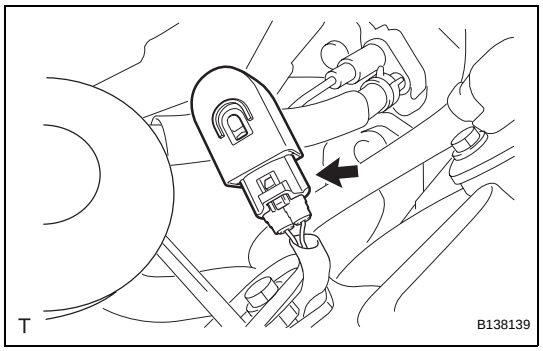

(b) Engage the clamp and install the wireless door lock buzzer.

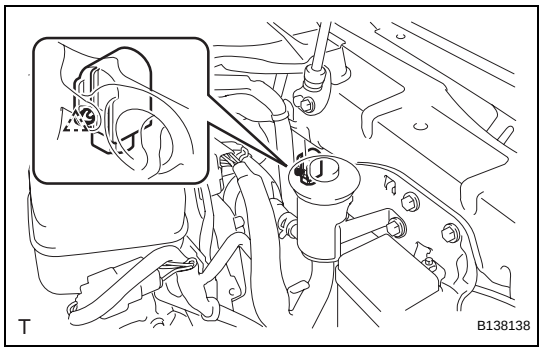

2. INSTALL NO. 1 WIRING HARNESS PROTECTOR

(a) Engage the 4 claws and install the No. 1 wiring harness protector.

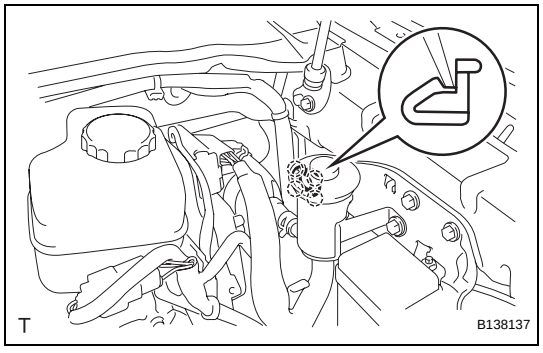

DL

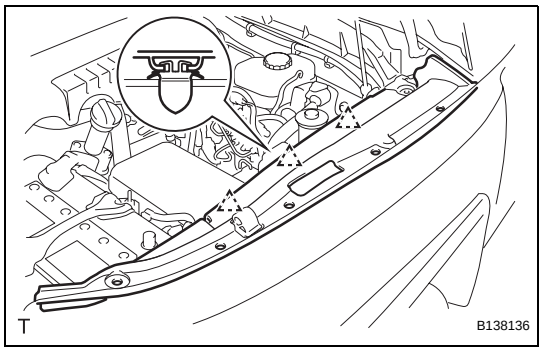

3. INSTALL FRONT FENDER SPLASH SHIELD SUB-ASSEMBLY

(a) Engage the 3 clips and install the front fender splash shield.

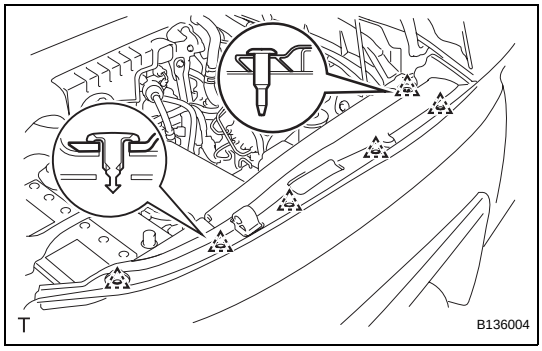

(b) Engage the 6 clips.

4. CONNECT CABLE TO NEGATIVE BATTERY TERMINAL
Torque: 3.9 N*m (40 kgf*cm, 35 in.*lbf)

FRONT DRIVE SHAFT (for 4WD)

COMPONENTS

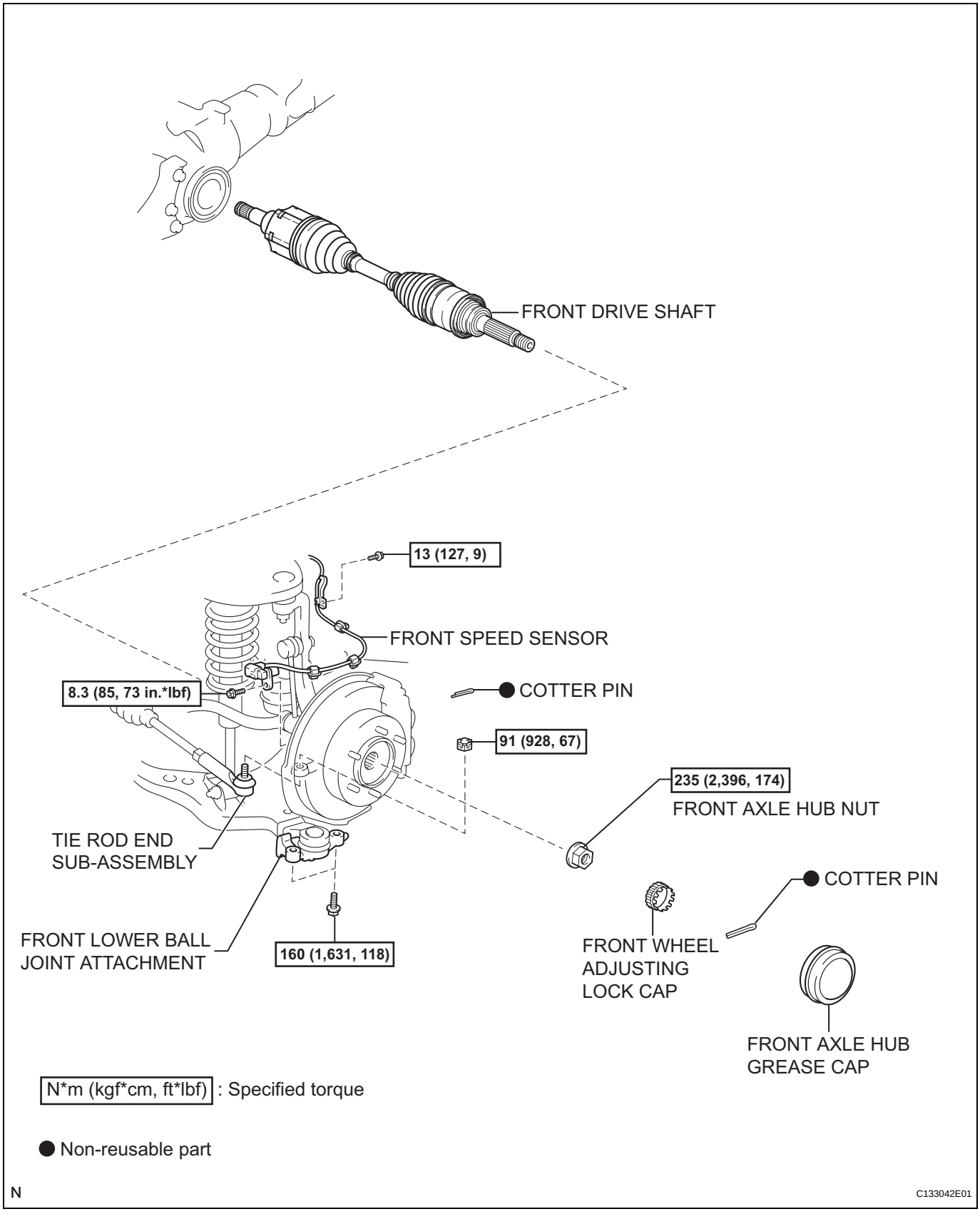

DS

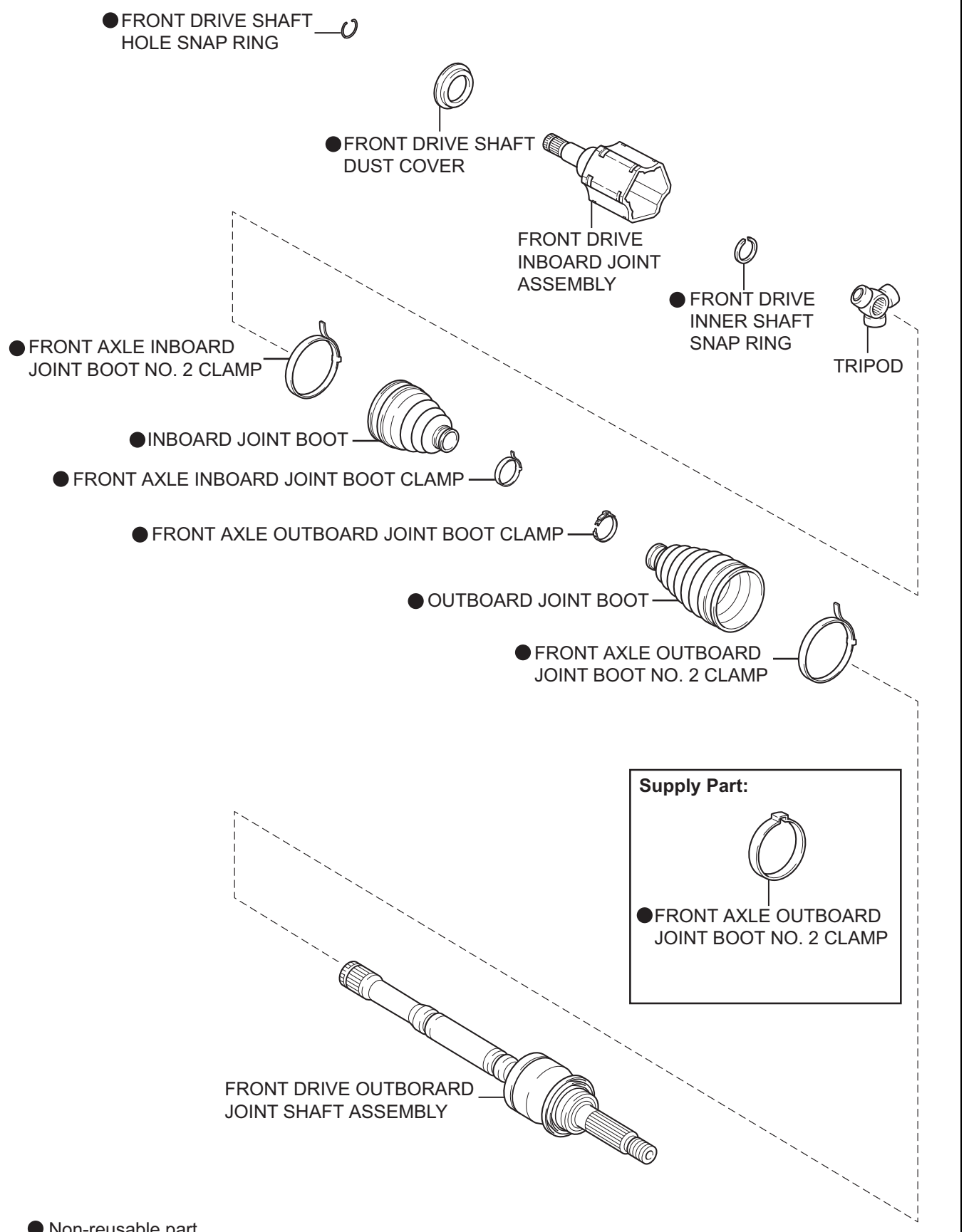
● FRONT DRIVE SHAFT HOLE SNAP RING
● FRONT DRIVE SHAFT DUST COVER
FRONT DRIVE INBOARD JOINT ASSEMBLY
● FRONT DRIVE INNER SHAFT SNAP RING
TRIPOD
● FRONT AXLE INBOARD JOINT BOOT NO. 2 CLAMP
● INBOARD JOINT BOOT
● FRONT AXLE INBOARD JOINT BOOT CLAMP
● FRONT AXLE OUTBOARD JOINT BOOT CLAMP
● OUTBOARD JOINT BOOT
● FRONT AXLE OUTBOARD JOINT BOOT NO. 2 CLAMP
Supply Part:
● FRONT AXLE OUTBOARD JOINT BOOT NO. 2 CLAMP
FRONT DRIVE OUTBORARD JOINT SHAFT ASSEMBLY
● Non-reusable part
N
C133043E01

DS

REMOVAL

1. DISCONNECT CABLE FROM NEGATIVE BATTERY TERMINAL

2. REMOVE FRONT WHEEL

3. DRAIN DIFFERENTIAL OIL

4. SEPARATE FRONT SPEED SENSOR

(a) Using a 5 mm hexagon wrench, remove the bolt and separate the front speed sensor.
(b) Disengage the 3 clamps.
(c) Remove the bolt and separate the skid control sensor wire from the steering knuckle.

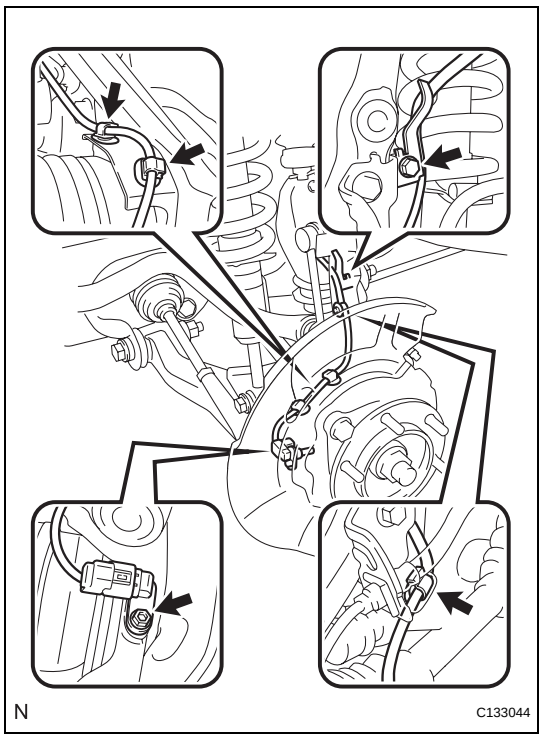

5. REMOVE FRONT AXLE HUB GREASE CAP

(a) Using a screwdriver and a hammer, remove the front axle hub grease cap.
NOTICE:
Do not damage the axle hub.

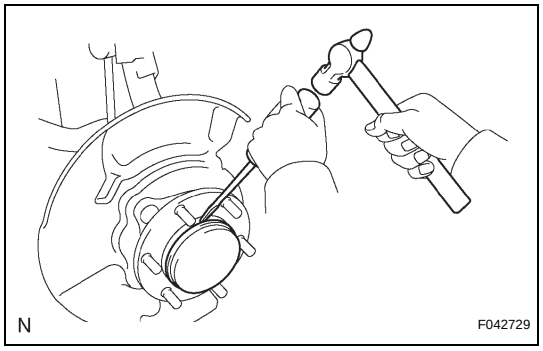

6. REMOVE FRONT AXLE HUB NUT

(a) Remove the cotter pin and adjusting lock cap.
(b) Remove the front axle hub nut.

7. SEPARATE TIE ROD END SUB-ASSEMBLY

(a) Remove the cotter pin and nut.

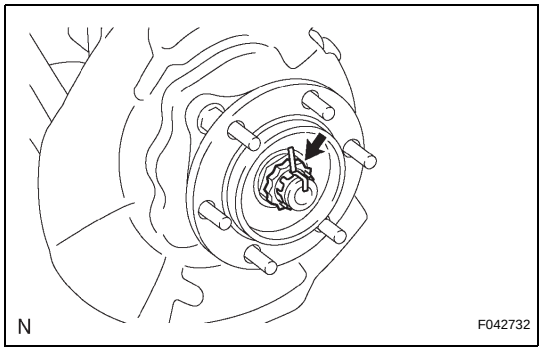

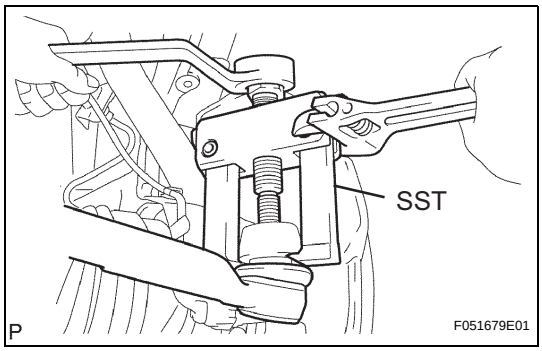

(b) Using SST, separate the tie rod end from the steering knuckle.
SST 09628-62011

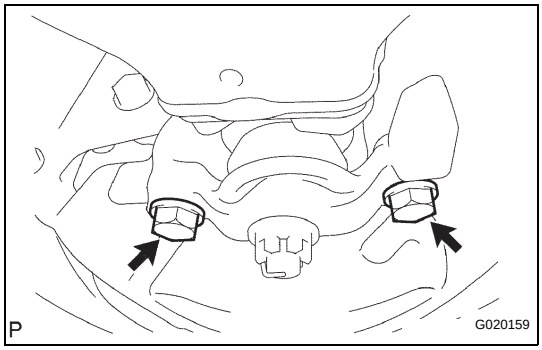

8. SEPARATE FRONT LOWER BALL JOINT ATTACHMENT

(a) Remove the 2 bolts and separate the front lower ball joint attachment from the steering knuckle.

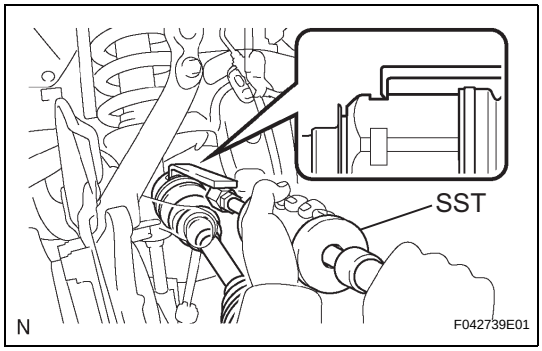

9. REMOVE FRONT DRIVE SHAFT

(a) Using SST, remove the front drive shaft.
SST 09520-01010, 09520-24010 (09520-32040)
NOTICE:
Do not damage the oil seal.

DISASSEMBLY

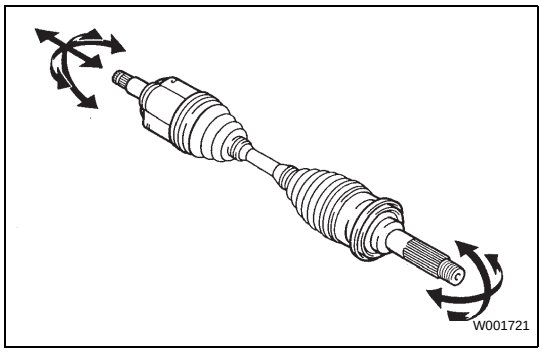

1. INSPECT FRONT DRIVE SHAFT

(a) Check that there is no remarkable play in the outboard joint.
(b) Check that the inboard joint slides smoothly in the thrust direction.
(c) Check that there is no remarkable play in the radial direction of the inboard joint.
(d) Check the boots for damage.
NOTICE:
Move the drive shaft while keeping it level.

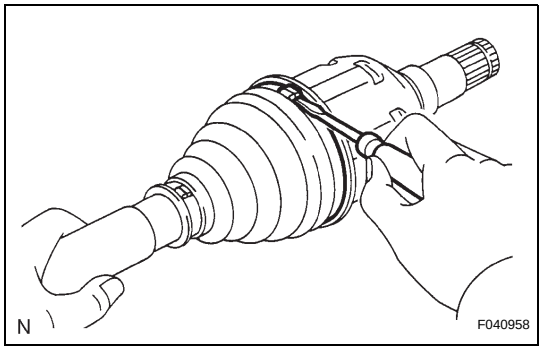

2. REMOVE FRONT AXLE INBOARD JOINT BOOT NO. 2 CLAMP

(a) Using a screwdriver, release the staked part of the boot clamp and separate the boot clamp.

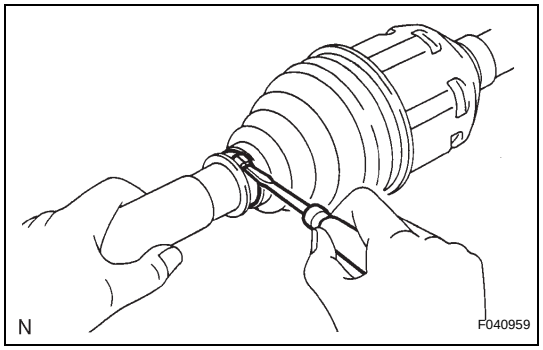

3. REMOVE FRONT AXLE INBOARD JOINT BOOT CLAMP

(a) Using a screwdriver, release the staked part of the boot clamp and separate the boot clamp.

4. SEPARATE INBOARD JOINT BOOT

(a) Separate the inboard joint boot from the inboard joint.

5. REMOVE FRONT DRIVE INBOARD JOINT ASSEMBLY

(a) Remove the old grease from the inboard joint.

(b) Place matchmarks on the inboard joint, tripod and outboard joint shaft.
NOTICE:
Do not punch the marks.

(c) Remove the inboard joint from the outboard joint shaft.

(d) Fix the outboard joint shaft in a vise between aluminum plates.
NOTICE:
Do not overtighten the vise.

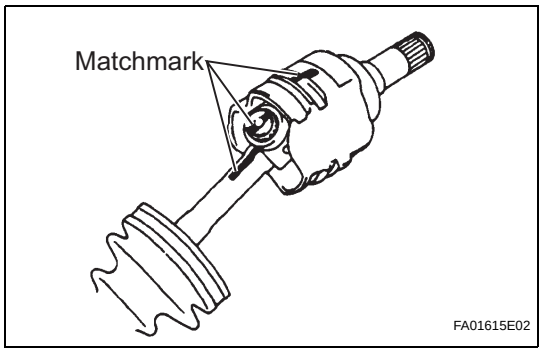

(e) Using a snap ring expander, remove the snap ring.

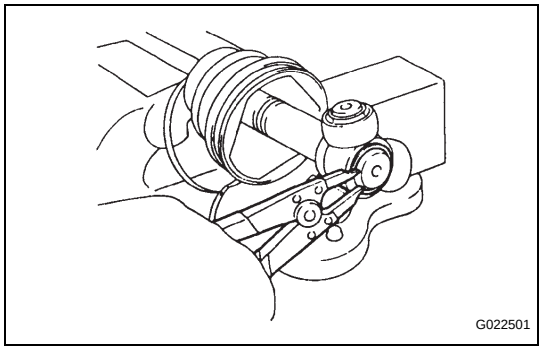

(f) Place matchmarks on the outboard joint shaft and tripod.
NOTICE:
Do not punch the marks.

(g) Using a brass bar and hammer, remove the tripod from the outboard joint shaft.
NOTICE:
Do not tap the roller.

(h) Remove the inboard joint boot No. 2 clamp, the inboard joint boot and the inboard joint boot clamp.

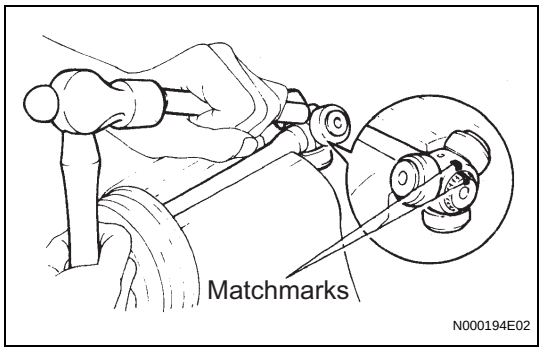

6. REMOVE FRONT AXLE OUTBOARD JOINT BOOT NO. 2 CLAMP

(a) Using a screwdriver, release the staked part of the boot clamp and remove the boot clamp.

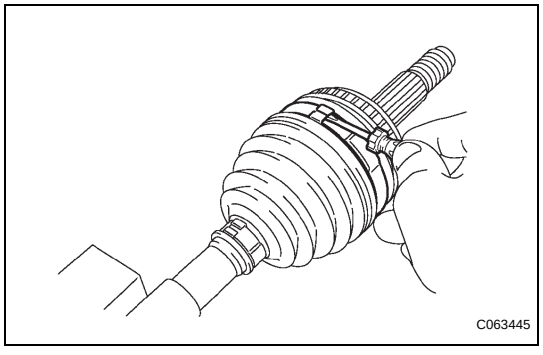

DS

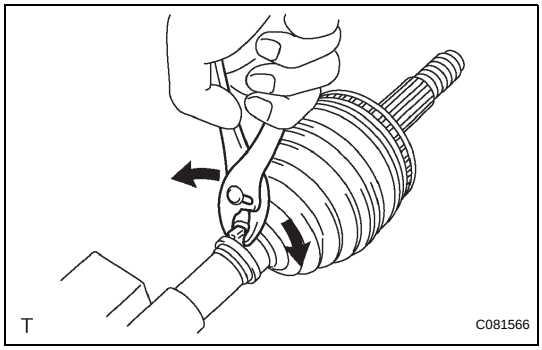

7. REMOVE FRONT AXLE OUTBOARD JOINT BOOT CLAMP

(a) Using pliers, remove the boot clamp, as shown in the illustration.

8. REMOVE OUTBOARD JOINT BOOT

(a) Remove the outboard joint boot from the outboard joint shaft.

(b) Remove the old grease from the outboard joint.

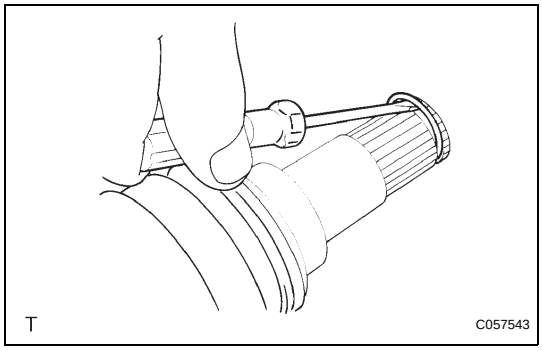

9. REMOVE FRONT DRIVE SHAFT HOLE SNAP RING

(a) Using a screwdriver, remove the snap ring.

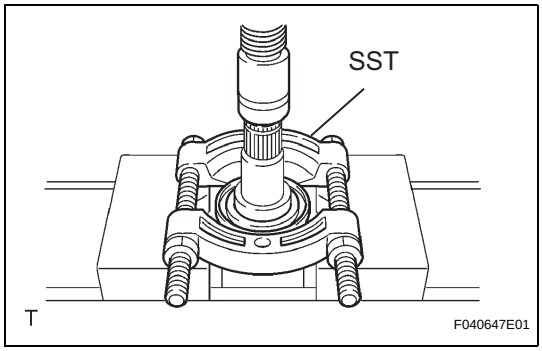

10. REMOVE FRONT DRIVE SHAFT DUST COVER

(a) Using SST and a press, remove the dust cover.
SST 09950-00020

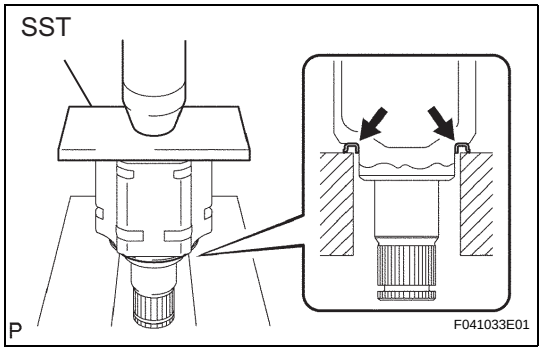

REASSEMBLY

1. INSTALL FRONT DRIVE SHAFT DUST COVER

(a) Using SST and a press, install a new dust cover into the inboard joint until it is flush with the end.
SST 09527-10011
NOTICE:
- **Install the dust cover in the correct orientation.**
- **Do not deform the dust cover.**

2. INSTALL FRONT DRIVE SHAFT HOLE SNAP RING

(a) Install a new snap ring.

3. INSTALL OUTBOARD JOINT BOOT

(a) Wrap the spline of the outboard joint shaft with protective tape.

(b) Install new parts onto the outboard joint shaft in the following order.

1.	Front axle outboard joint boot No. 2 clamp
2.	Front axle outboard joint boot
3.	Front axle outboard joint boot clamp

(c) Pack the joint portion of the outboard joint shaft and outboard joint boot with grease.
Grease capacity:
260 to 270 g (9.2 to 9.5 oz.)

(d) Install the outboard joint boot onto the outboard joint shaft groove.
NOTICE:
Keep the groove free of grease.

4. INSTALL FRONT AXLE OUTBOARD JOINT BOOT NO. 2 CLAMP

(a) Fix the outboard joint shaft in a vise between aluminum plates.
NOTICE:
Do not overtighten the vise.

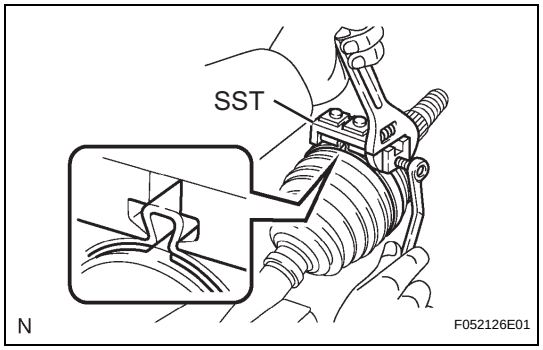

(b) Place SST onto the boot clamp, press it against the boot and slightly tighten SST.
SST 09521-24010

(c) Fix SST and tighten it so that the clearance comes to within the specified range.
Clearance:
0.8 mm (0.031 in.) or less

(d) Remove SST.

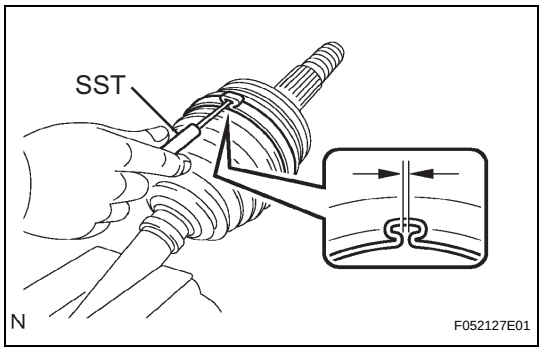

(e) Using SST, measure the clearance of the boot clamp as shown in the illustration.
SST 09240-00020
Clearance:
0.8 mm (0.031 in.) or less
NOTICE:
If the clearance is outside the specified range, retighten it.

5. INSTALL FRONT AXLE OUTBOARD JOINT BOOT CLAMP

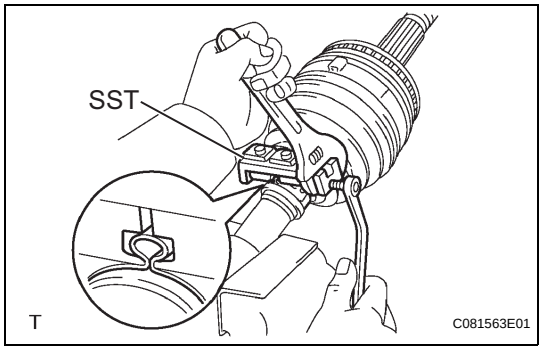

(a) Place SST onto the boot clamp, press it against the boot and slightly tighten SST.
SST 09521-24010

(b) Fix SST and tighten it so that the clearance comes to within the specified range.
Clearance:
0.8 mm (0.031 in.) or less

(c) Remove SST.

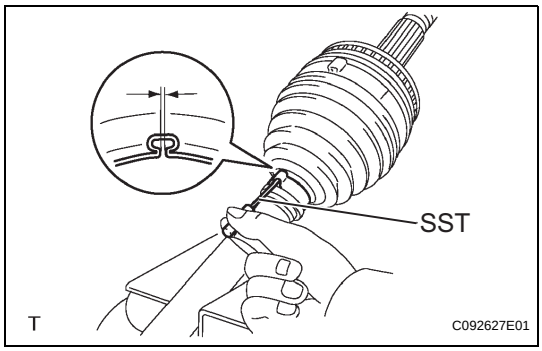

(d) Using SST, measure the clearance of the boot clamp as shown in the illustration.
SST 09240-00020
Clearance:
0.8 mm (0.031 in.) or less
NOTICE:
If the clearance is outside the specified range, retighten it.

6. INSTALL FRONT DRIVE INBOARD JOINT ASSEMBLY

(a) Install new parts onto the outboard joint shaft in the following order.

1.	Front axle inboard joint boot clamp
2.	Front axle inboard joint boot
3.	Front axle inboard joint boot No. 2 clamp

(b) Fix the outboard joint shaft in a vise between aluminum plates.
NOTICE:
Do not overtighten the vise.

(c) Remove the protective tape.

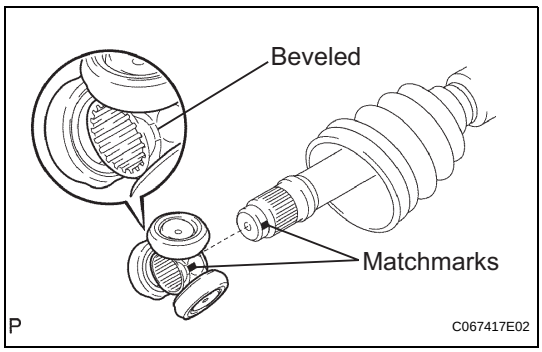

(d) Align the matchmarks and install the tripod joint onto the outboard joint shaft.
NOTICE:
Place the beveled side of the tripod toward the inboard joint.

(e) Using a brass bar and hammer, install the tripod joint.
NOTICE:
- **Do not hit the roller portion.**
- **Keep the tripod joint free of foreign matter.**

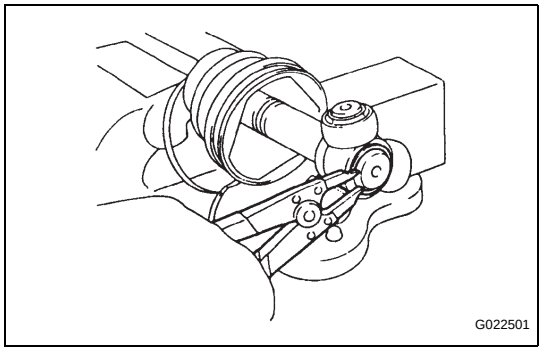

(f) Using a snap ring expander, install a new snap ring.

(g) Pack the inboard joint with grease.
Grease capacity:
231 to 241 g (8.1 to 8.5 oz.)

(h) Align the matchmarks and install the inboard joint onto the outboard joint shaft.

7. INSTALL INBOARD JOINT BOOT

(a) Install the inboard joint boot into the grooves of the inboard joint and outboard joint shaft.
NOTICE:
Keep the grooves free of grease.

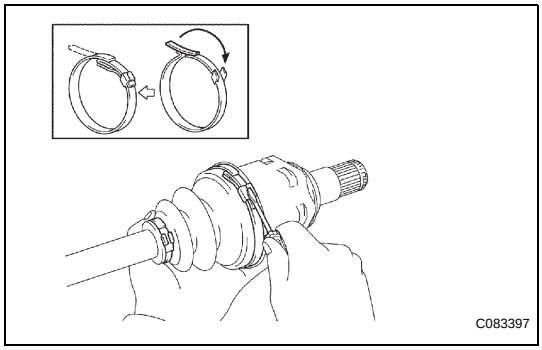

8. INSTALL FRONT AXLE INBOARD JOINT BOOT NO. 2 CLAMP

(a) Install the boot clamp onto the inboard joint boot and caulk the boot clamp with a screwdriver.
NOTICE:
Do not damage the boot.

DS

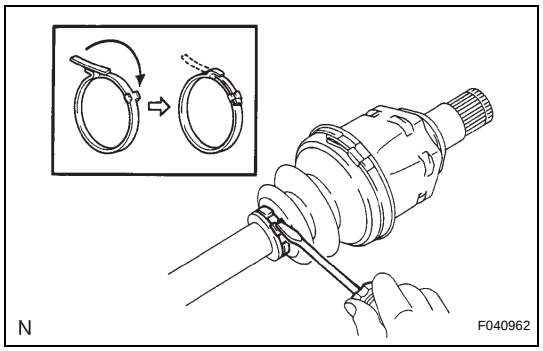

9. INSTALL FRONT AXLE INBOARD JOINT BOOT CLAMP

(a) Install the boot clamp onto the inboard joint boot and caulk the boot clamp with a screwdriver.
NOTICE:
Do not damage the boot.

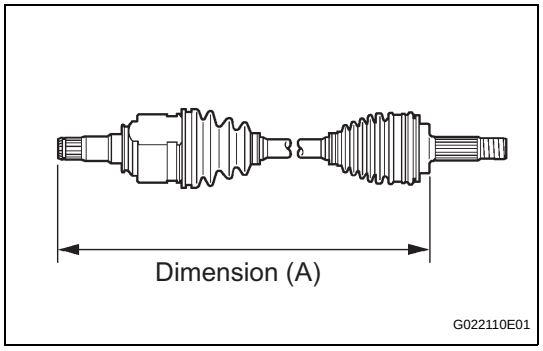

10. INSPECT FRONT DRIVE SHAFT

(a) Check whether the drive shaft dimensions are within the following specifications.
Dimension (A):
577.5 mm (22.74 in.)

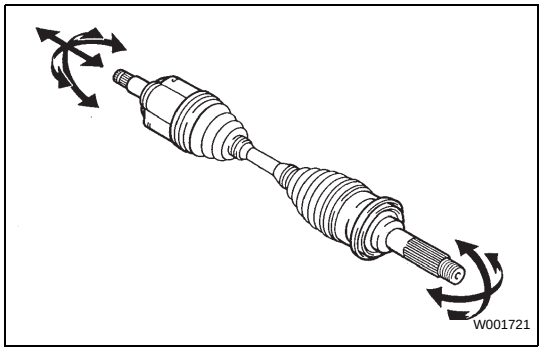

(b) Check for noticeable looseness when turning the joint up and down, left and right, and in the thrust direction.

(c) Check for cracks, damage and grease leakage on the boot joint.
NOTICE:
Keep the drive shaft level while moving it.

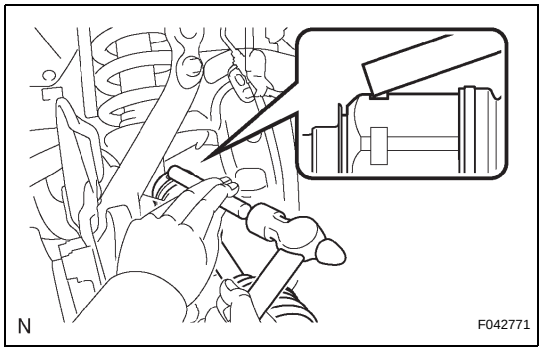

INSTALLATION

1. INSTALL FRONT DRIVE SHAFT

(a) Coat the spline of the inboard joint shaft with ATF.

(b) Align the shaft splines and install the drive shaft with a brass bar and hammer.
NOTICE:
- **Set the snap ring with the opening side facing downward.**
- **Do not damage the oil seal.**

HINT:
Whether the inboard joint shaft is in contact with the pinion shaft or not can be confirmed from the sound or feeling when driving it.

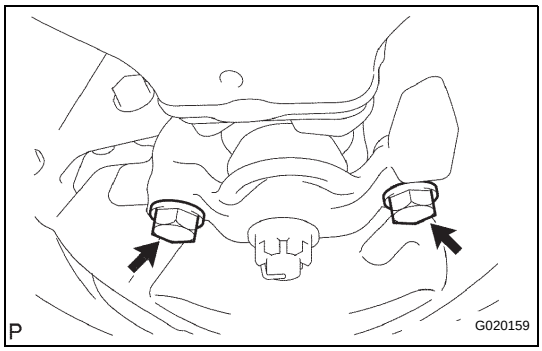

2. INSTALL FRONT LOWER BALL JOINT ATTACHMENT

(a) Install the front lower ball joint attachment with the 2 bolts.
Torque: 160 N*m (1,631 kgf*cm, 118 ft.*lbf)

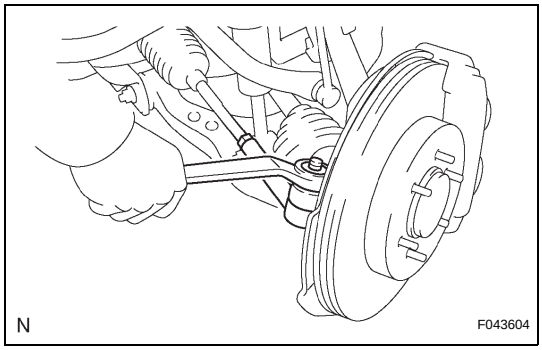

3. INSTALL TIE ROD END SUB-ASSEMBLY

(a) Install the tie rod end onto the steering knuckle.
(b) Install the nut.
Torque: 91 N*m (928 kgf*cm, 67 ft.*lbf)
(c) Install a new cotter pin.
NOTICE:
If the holes in the cotter pin are not aligned, tighten the nut an additional 60°.

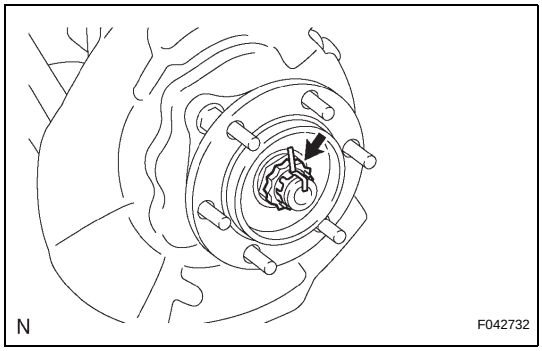

4. INSTALL FRONT AXLE HUB NUT

(a) Install the hub nut.
Torque: 235 N*m (2,396 kgf*cm, 174 ft.*lbf)
(b) Install the adjusting lock cap and a new cotter pin.

5. INSTALL FRONT AXLE HUB GREASE CAP

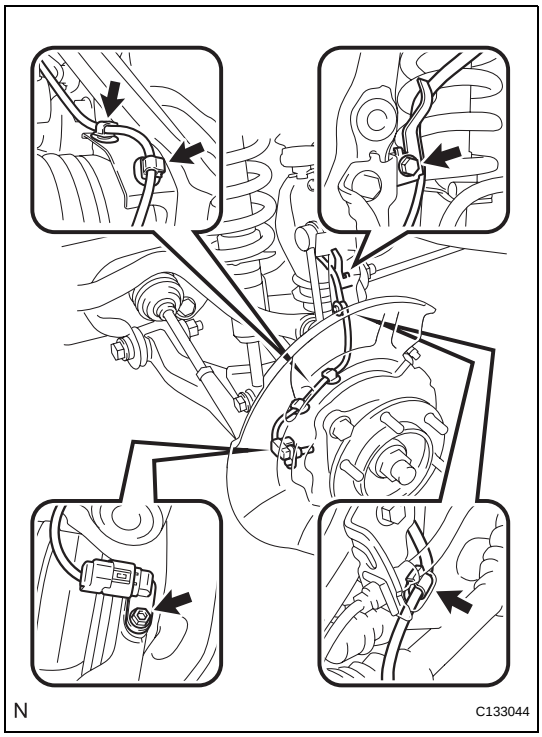

6. INSTALL FRONT SPEED SENSOR

(a) Install the skid control sensor wire onto the steering knuckle with the bolt.
Torque: 13 N*m (127 kgf*cm, 9 ft.*lbf)
(b) Engage the 3 clamps.
(c) Using a 5 mm hexagon wrench, install the speed sensor with the bolt.
Torque: 8.3 N*m (85 kgf*cm, 73 in.*lbf)

7. INSTALL FRONT WHEEL
Torque: 112 N*m (1,137 kgf*cm, 82 ft.*lbf)

8. INSPECT DIFFERENTIAL OIL (See page DF-3)

9. CONNECT CABLE TO NEGATIVE BATTERY TERMINAL
Torque: 3.9 N*m (40 kgf*cm, 35 in.*lbf)

10. CHECK VSC SENSOR SIGNAL
(See page BC-28)

11. CHECK FOR DIFFERENTIAL OIL LEAKAGE

12. INSPECT AND ADJUST FRONT WHEEL ALIGNMENT
(See page SP-2)

EMISSION CONTROL SYSTEM

PARTS LOCATION

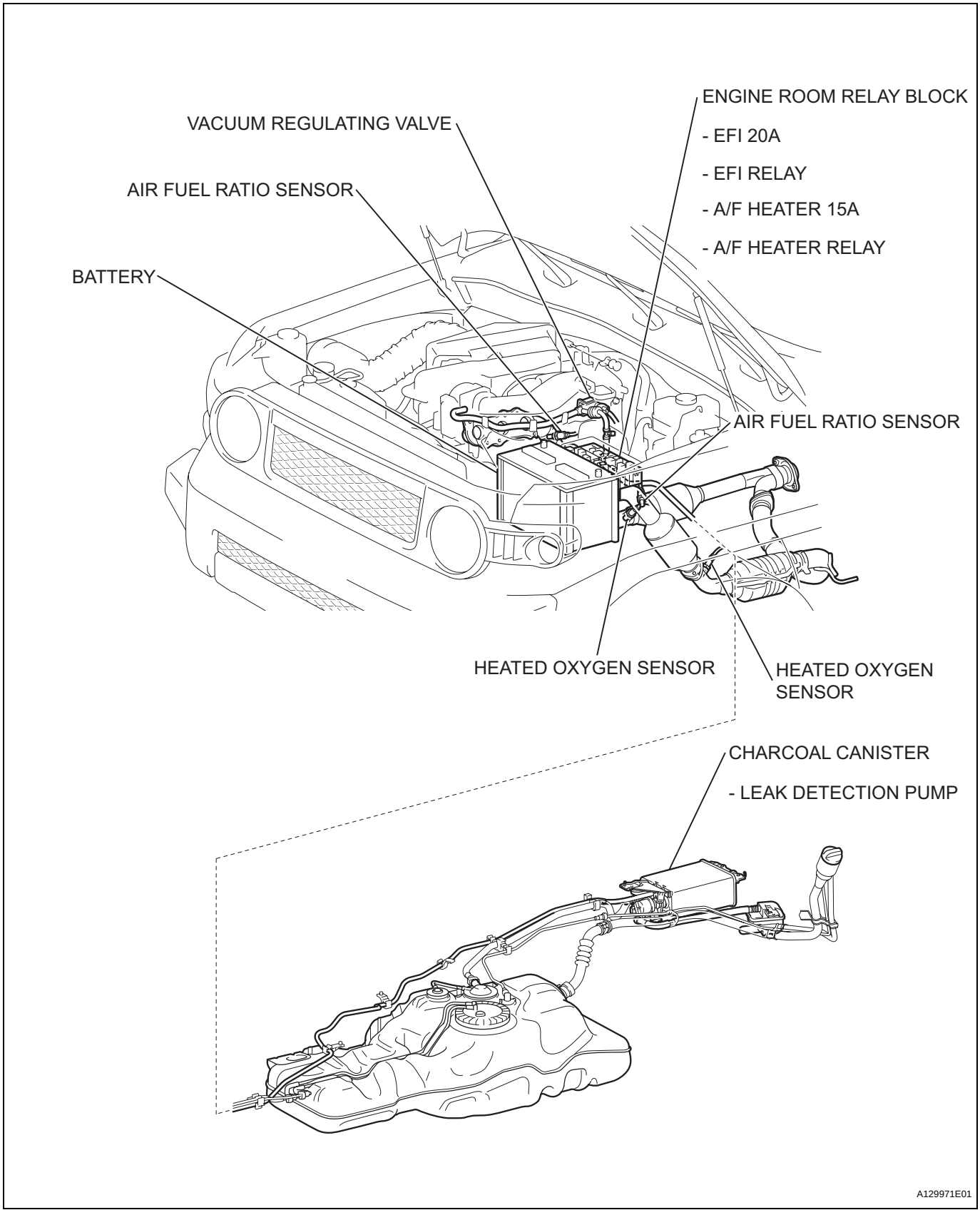

EC

SYSTEM DIAGRAM

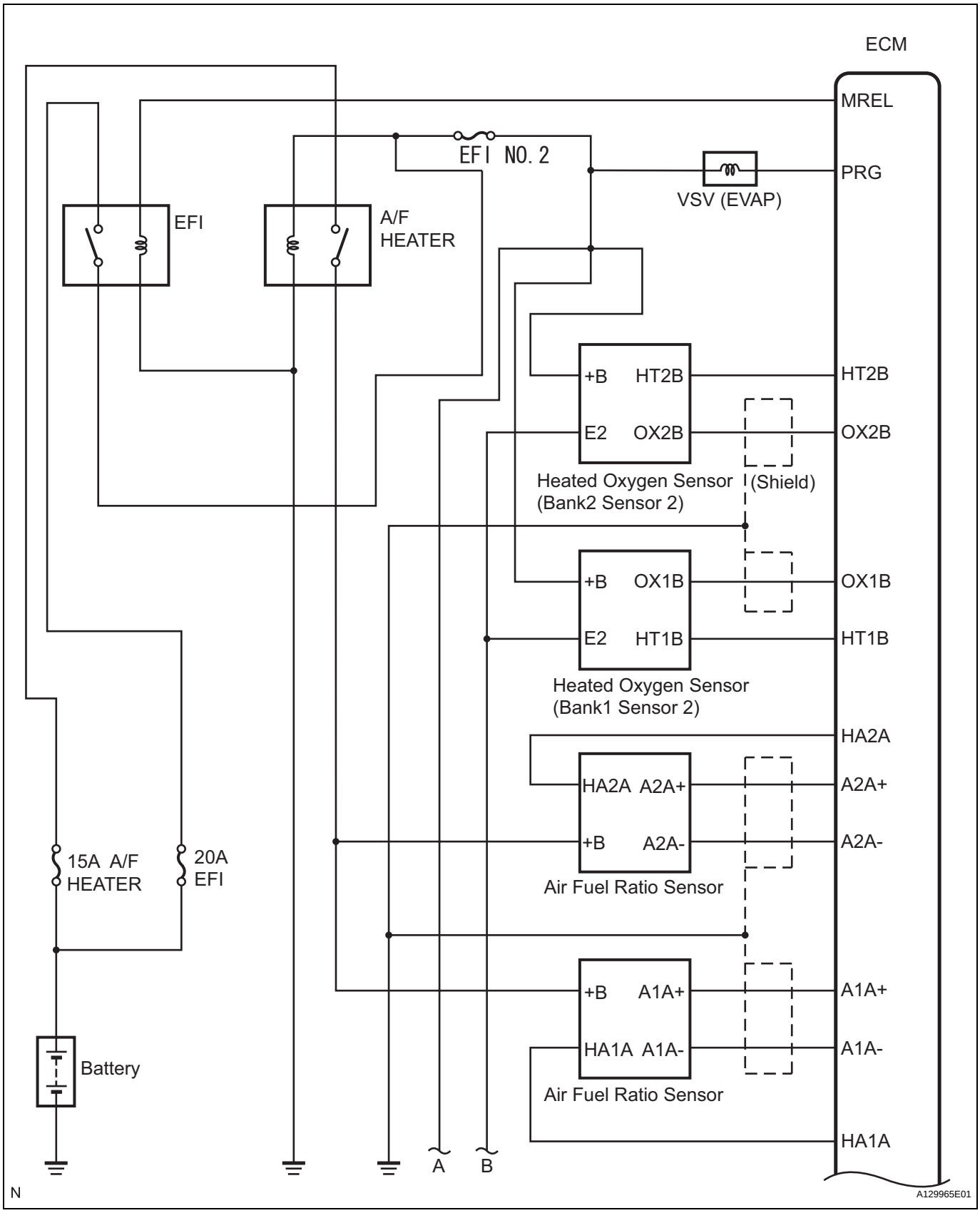

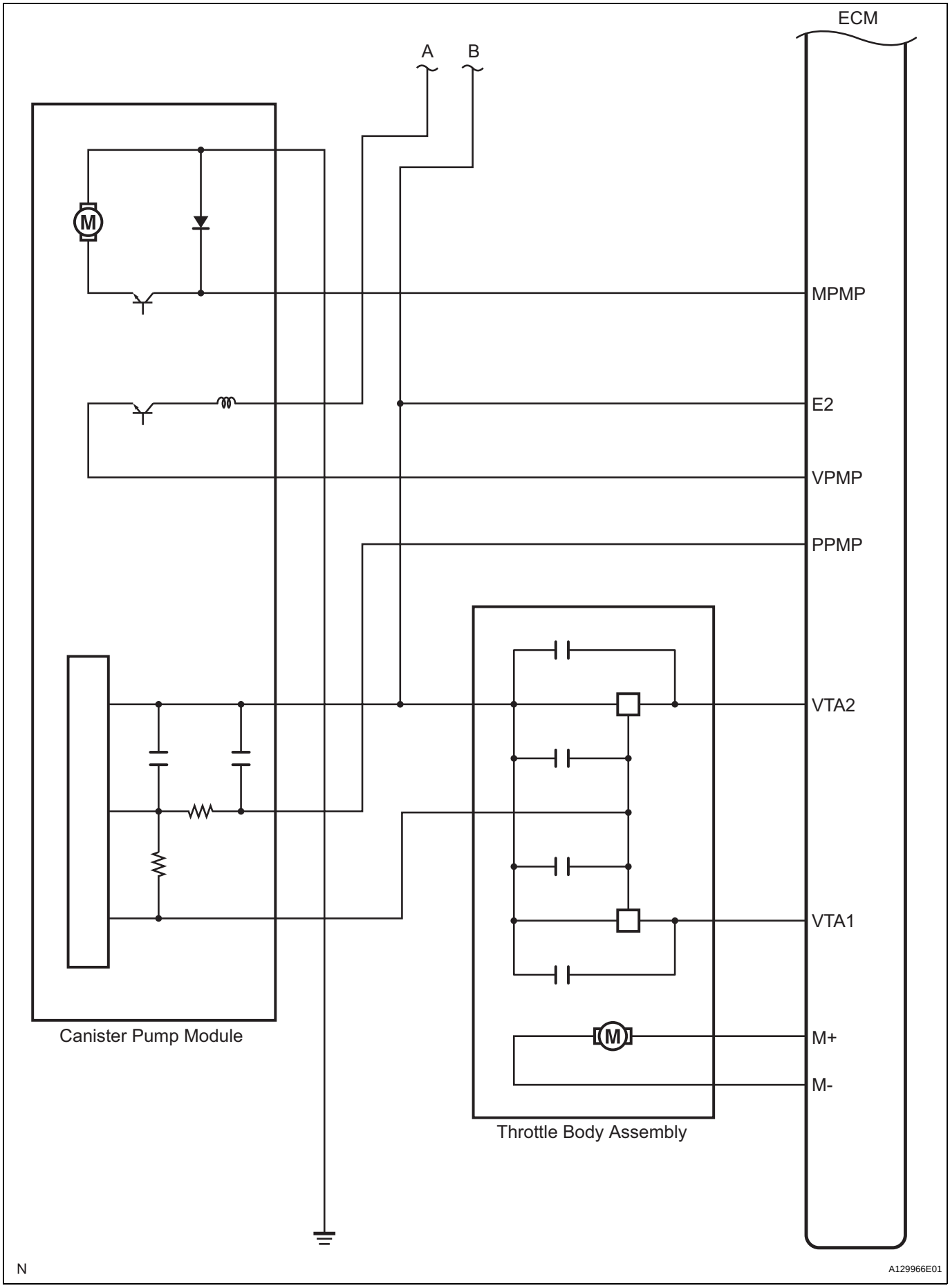
ECM
A
B
MPMP
E2
VPMP
PPMP
VTA2
VTA1
M+
M-
Canister Pump Module
Throttle Body Assembly
N
A129966E01

ON-VEHICLE INSPECTION

1. INSPECT AIR-FUEL RATIO COMPENSATION SYSTEM

(a) Measure the voltage between the terminals of the ECM connectors.

Standard voltage

Tester Connection	Condition	Specified Condition
B2-22 (A1A-) - B3-1(E1)	Ignition switch ON	3.3 V
B2-23 (A2A+) - B3-1(E1)	Ignition switch ON	3.3 V
B2-30 (A1A+) - B3-1 (E21	Ignition switch ON	2.9 V
B2-31 (A2A-) - B3-1(E1)	Ignition switch ON	2.9 V

NOTICE:
Connect test leads from the back side of the connector. Do not disconnect the connectors from the ECM.

HINT:
Voltage between the terminals of the ECM is kept constant regardless of the voltage of the A/F sensor.

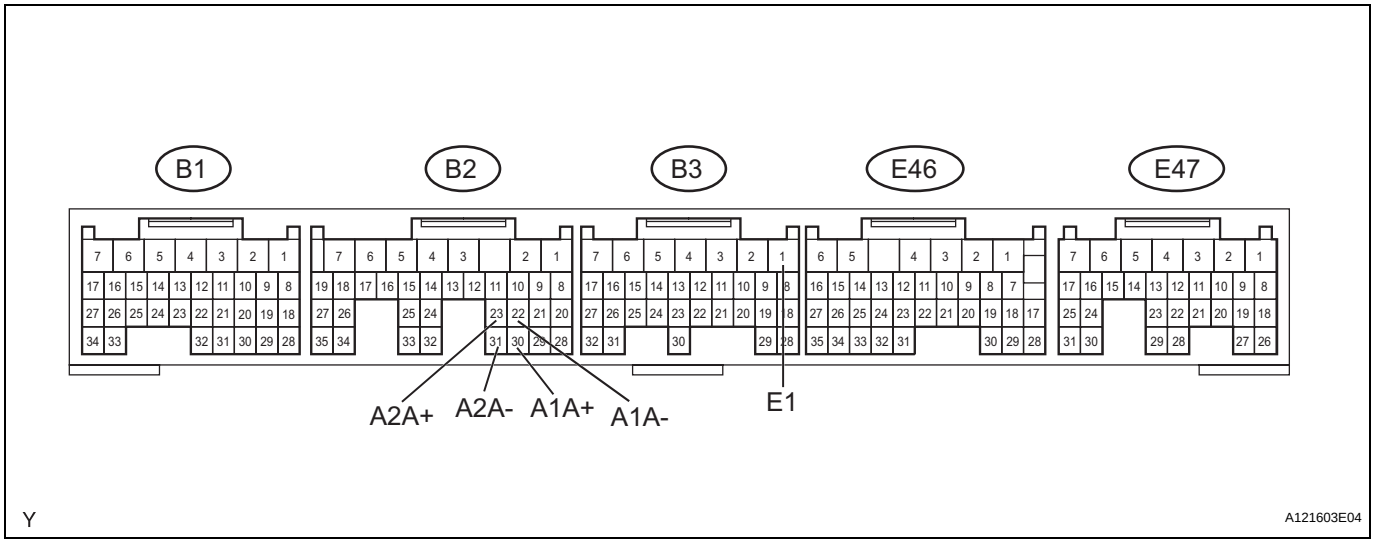

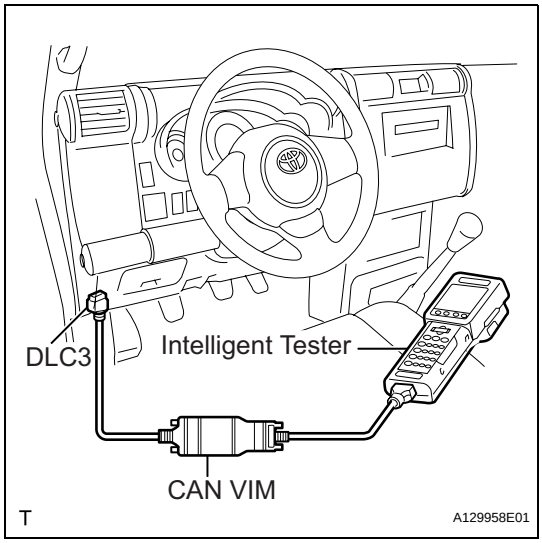

(b) Connect the intelligent tester to the DLC3.
(c) Turn the ignition switch ON.
(d) Select the following menu items: DIAGNOSIS / ENHANCED OBD II / DATA LIST / AFS B1 S1 and O2S B1 S2.
(e) Warm up the A/F sensor with the engine speed at 2,500 rpm for approximately 2 minutes.

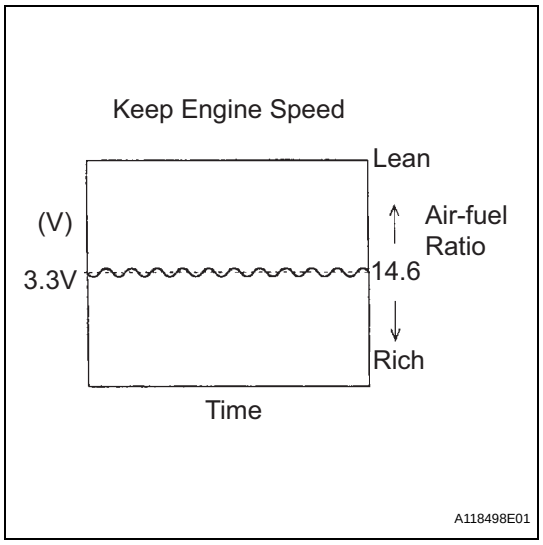

(f) Maintain the engine speed at 2,500 rpm and confirm that the display on the intelligent tester, when AFS B1 S1 is selected, is as shown in the illustration.
HINT:
- The display on the intelligent tester may slightly differ from the illustration.
- Only the intelligent tester displayed the waveform of the A/F sensor.

(g) Confirm that the waveform displays on the intelligent tester, when O2S B1 S2 is selected, changes between 0 V and 1 V with the engine speed at 2,500 rpm.
OK:
The voltage output oscillates more than 8 times in 10 seconds.
CAUTION:
- **Perform the check immediately after warming up the engine.**
- **If the voltage variation could not be verified, warm up the heated oxygen sensor again. If it could not be verified even after warming up the sensor again, check the DTC No. (See page ES-57)**

EC

2. INSPECT FUEL CUT-OFF RPM

(a) Increase the engine speed to at least 3,500 rpm.
(b) Use a sound scope to check for injector operating sounds.
(c) Check that the injector operating sounds stop momentarily and then resume when the accelerator pedal is released.
Fuel cut off rpm:
2,500 rpm
Fuel return rpm:
1,200 rpm

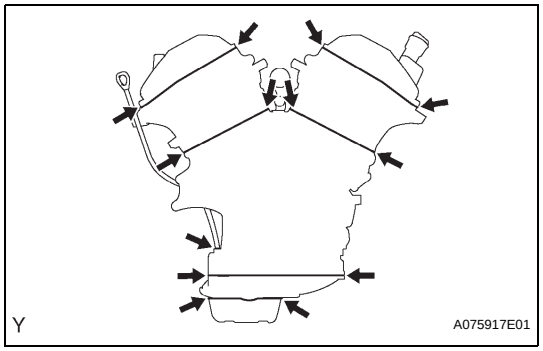

3. VISUALLY INSPECT HOSES, CONNECTIONS AND GASKETS

(a) Check the appearance.
(1) Check if the indicated portions of the engine assembly are cracked, leaking or damaged.
HINT:
Disconnection of the engine oil level gauge, oil filler cap, PCV hose, etc. may cause the engine to run improperly. Disconnected, loose or cracked parts in the air induction system between the throttle body and cylinder head will allow air suction and cause the engine to run improperly.
If necessary, repair the engine assembly.

4. INSPECT FUEL CUT OFF VALVE AND FILL CHECK VALVE

(a) Disconnect the vent line hose from the fuel tank. (See page FU-45)
(b) Connect the pressure gauge to the vent hose port.

(c) Fill the fuel tank with fuel.

(d) Apply pressure at 4 kPa (0.04 kgf*cm^2, 0.58 psi) to the vent port of the fuel tank.
HINT:
Check the amount of fuel left in the fuel tank.

(e) Remove the fuel tank cap, and check that the pressure decreases.
If the pressure does not decrease, replace the fuel tank assembly.

(f) Reconnect the vent line hose to the fuel tank.

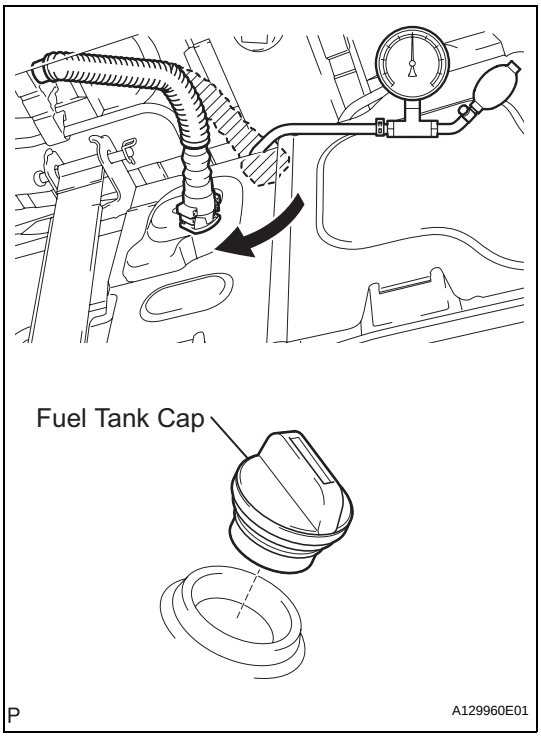

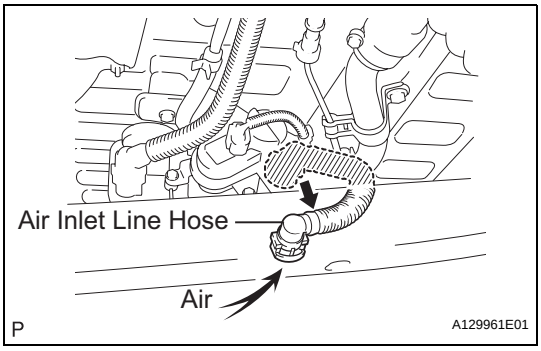

5. CHECK AIR INLET LINE

(a) Disconnect the air inlet line hose from the charcoal canister. (See page EC-9)

(b) Check that air flows freely into the air inlet line.
If air does not flow freely into the air inlet line, repair or replace the air inlet line.

(c) Reconnect the air inlet line hose to the charcoal canister.

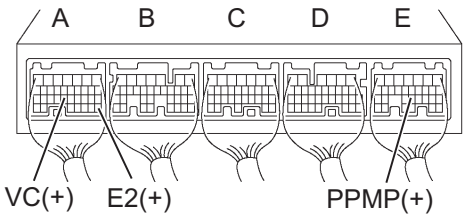

Y **Pressure Sensor Specification**

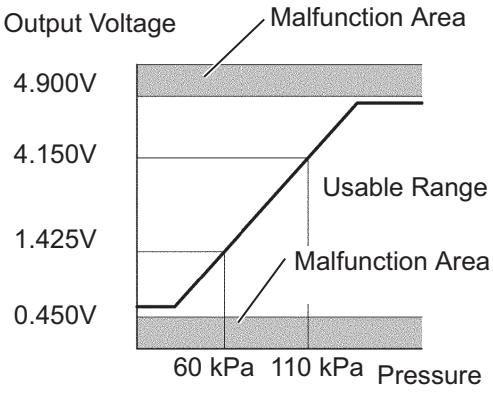

HINT:
Standard Atmospheric Pressure:101.3 kPa

P G036145E01

6. INSPECT LEAK DETECTION PUMP PRESSURE SENSOR

(a) Measure the power source voltage of the ECM connectors.

Standard voltage

Tester Connection	Condition	Specified Condition
A23 (VC) - A28 (E2)	Ignition switch ON	4.5 to 5.5 V

If the voltage is not as specified, check the ECM, leak detection pump and wire harness.

(b) Measure the power output voltage of the ECM connectors.

(1) Remove the fuel tank cap.

Standard voltage

Tester Connection	Condition	Specified Condition
E22 (PPMP) - A28 (E2)	Ignition switch ON	1.425 to 4.150 V

If the voltage is not as specified, check the ECM, leak detection pump and wire harness.

(2) Install the fuel tank cap.

EC

CANISTER

COMPONENTS

EC

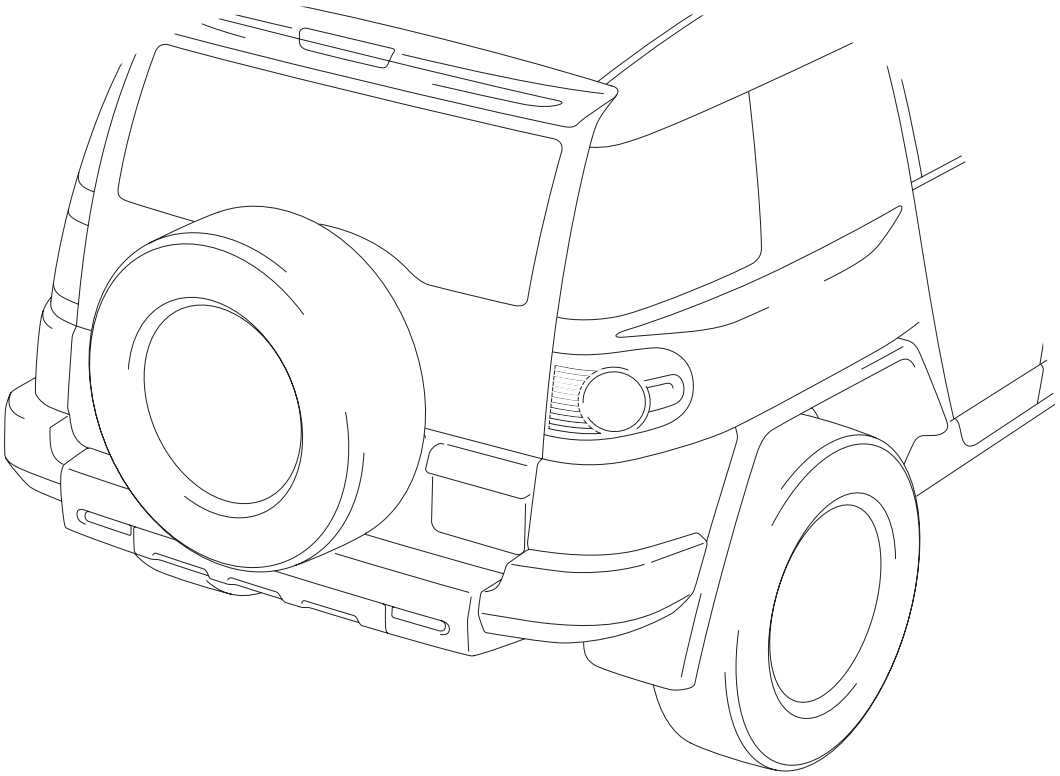

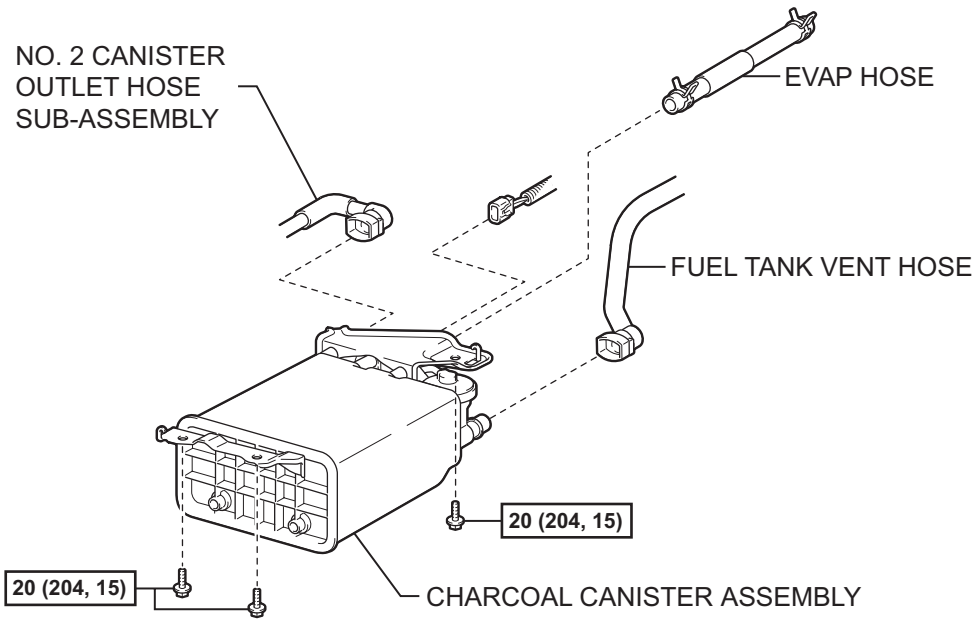

N*m (kgf*cm, ft*lbf) : Specified torque

P

A129924E01

REMOVAL

1. **DISCHARGE FUEL SYSTEM PRESSURE**
(See page FU-1)

2. **DISCONNECT CABLE FROM NEGATIVE BATTERY TERMINAL**

3. **REMOVE CHARCOAL CANISTER ASSEMBLY**

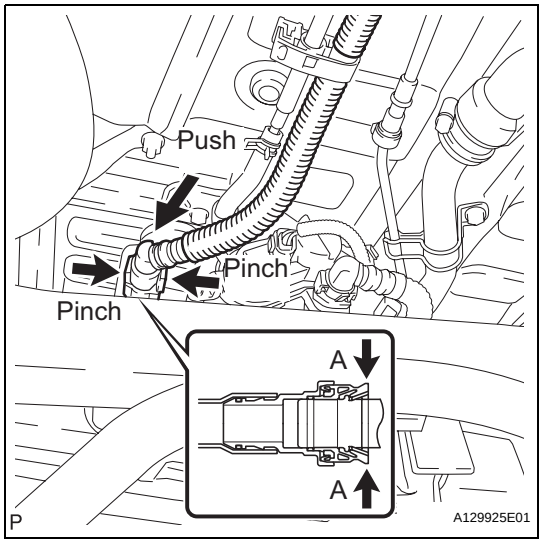

(a) Disconnect the fuel tank breather tube from the fuel tank.
(1) Push the connector deep inside.
(2) Pinch portion A, as shown in the illustration.
(3) Pull out the connector.

NOTICE:
- **Remove any dirt and foreign objects from the fuel tank vent hose connector before performing the work.**
- **Do not allow any scratches or foreign objects on the parts when disconnecting, as the fuel tank vent hose connector has the O-ring that seals the pipe.**
- **Perform the work by hand. Do not use any tools.**
- **Do not forcibly bend, twist or turn the nylon tube.**
- **Protect the disconnected part by covering it with a vinyl bag after disconnecting the fuel tank vent hose.**
- **If the fuel vent connector and pipe are stuck, push and pull them to release.**

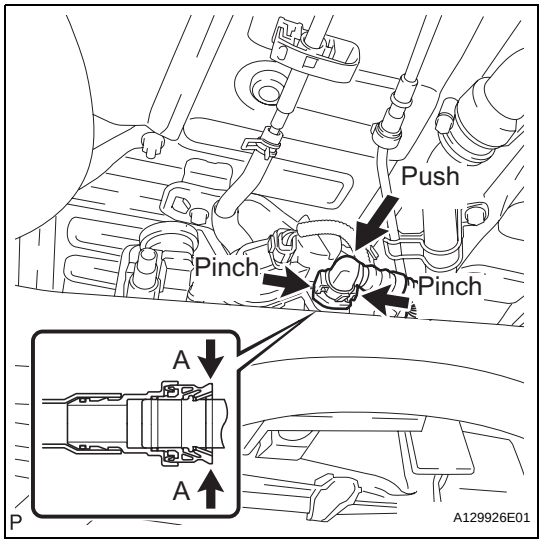

(b) Disconnect the No. 2 canister outlet hose sub-assembly.
(1) Push the connector deep inside.
(2) Pinch portion A, as shown in the illustration.
(3) Pull out the connector.

NOTICE:
- **Remove any dirt and foreign objects from the fuel tank vent hose connector before performing the work.**
- **Do not allow any scratches or foreign objects on the parts when disconnecting, as the fuel tank vent hose connector has the O-ring that seals the pipe.**
- **Perform the work by hand. Do not use any tools.**
- **Do not forcibly bend, twist or turn the nylon tube.**
- **Protect the disconnected part by covering it with a vinyl bag after disconnecting the fuel tank vent hose.**
- **If the fuel vent connector and pipe are stuck, push and pull them to release.**

EC

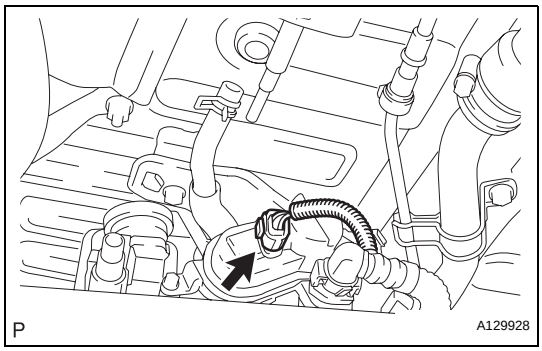

(c) Disconnect the connector.

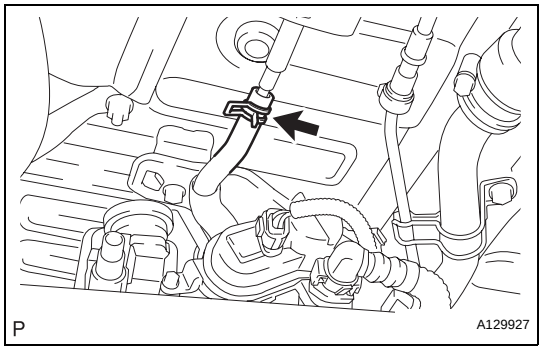

(d) Disconnect the EVAP hose.

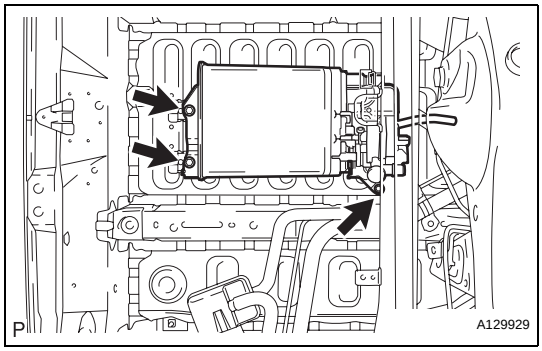

(e) Remove 3 bolts, then remove charcoal the canister assembly.

INSPECTION

1. INSPECT CHARCOAL CANISTER ASSEMBLY

(a) Visually check the charcoal canister for cracks and damage.
If there is any cracks or damage, replace the charcoal canister assembly.

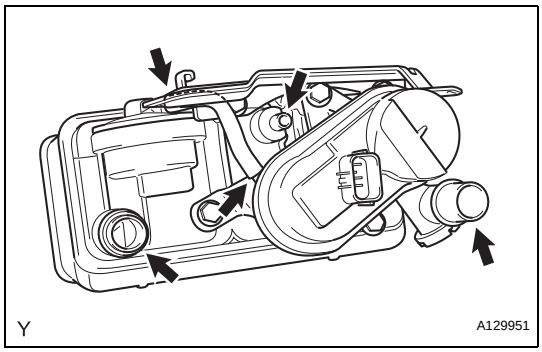

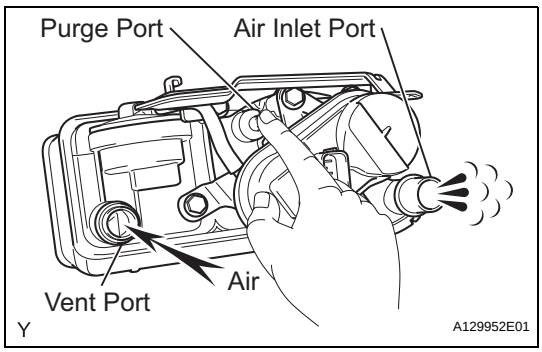

(b) Check the charcoal canister operation.
(1) While holding the purge port closed, blow pressurized air at 1.67 kPa (17.0 gf/cm^2, 0.24 psi) into the vent port, and check that the air flows from the air inlet port.
If the result is not as specified, replace the charcoal canister assembly.

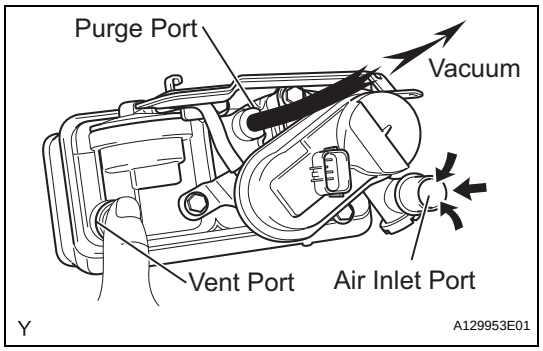

(2) While holding the vent port closed, apply a vacuum of 1.10 kPa (8.3 mmHg, 0.32 in.Hg) into the purge port, and check that the air flows from the air inlet port.
If the result is not as specified, replace the charcoal canister assembly.

(c) Check for air leakage.
(1) Remove the air hose between ports A and B.

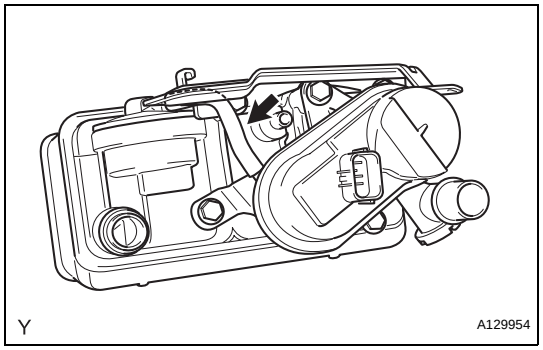

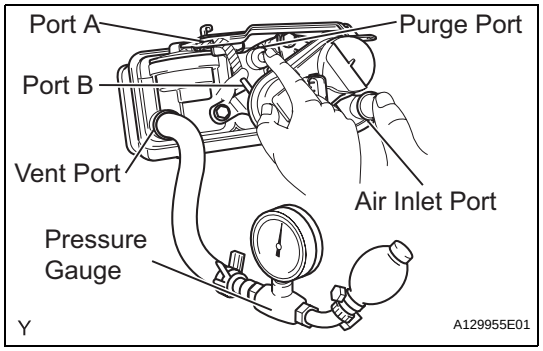

(2) Connect the pressure gauge to the vent port of the charcoal canister.
SST 09992-00242
(3) While holding port B, the purge port and air inlet port closed with your fingers, leave port A open and apply pressurized air at 19.6 kPa (0.2 kgf/cm^2, 2.81 psi) into the vent port. Check that the pressure is retained.
If the result is not as specified, replace the charcoal canister assembly.

(d) Check the leak detection pump.
(1) Check that air flows from port A to ports B and C.
If the result is not as specified, replace the pump module.

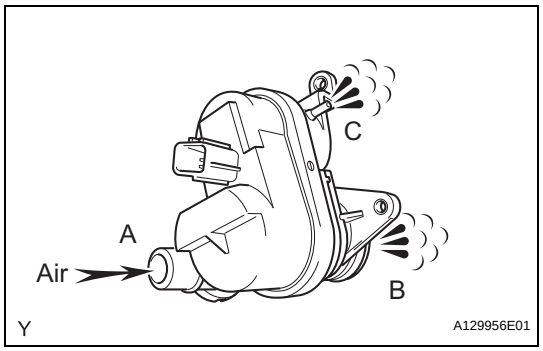

(2) Apply battery positive voltage across the terminals.
(3) Check that the valve is closed.
If the result is not as specified, replace the pump module.

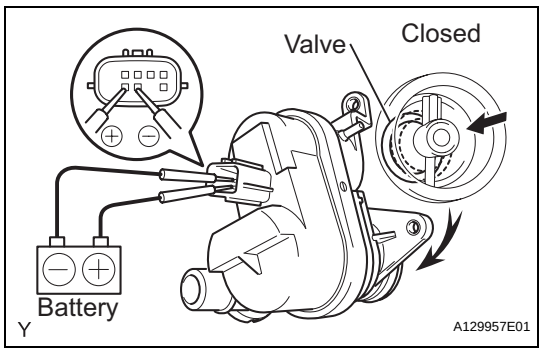

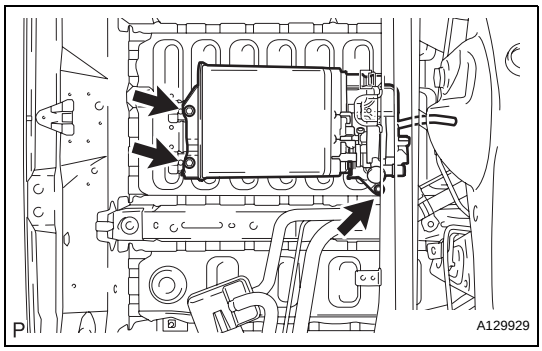

INSTALLATION

1. INSTALL CHARCOAL CANISTER ASSEMBLY

(a) Install the canister with the 3 bolts.
Torque: 20 N*m (204 kgf*cm, 15 ft.*lbf)

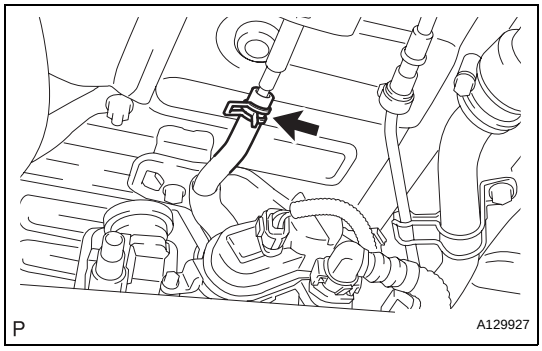

(b) Connect the connector.

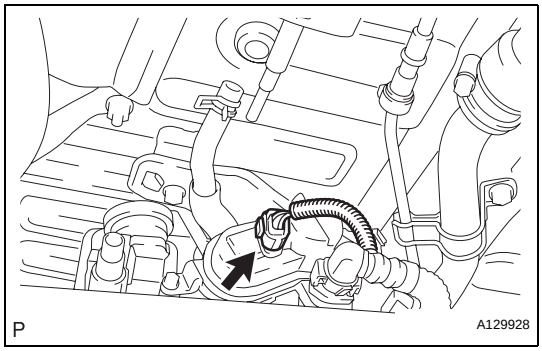

(c) Connect the EVAP hose.

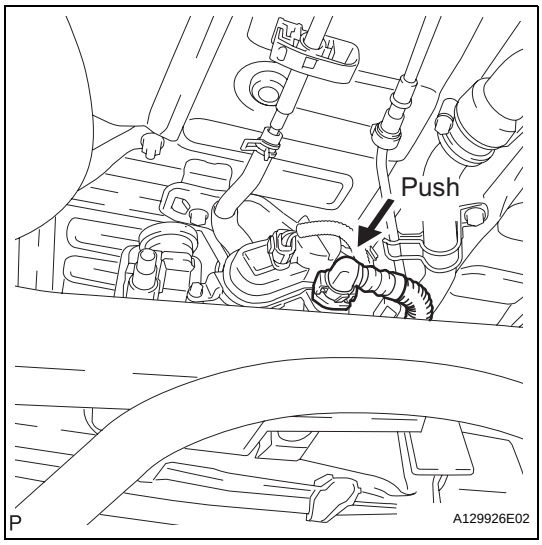

(d) Connect the No. 2 canister outlet hose sub-assembly.
(1) Align the fuel tank vent hose connector with the pipe, then push in the fuel tank vent connector until the retainer makes a "click" sound to connect the fuel tank vent hose to the charcoal canister.
NOTICE:
- **Check that there are no scratches or foreign objects on the disconnected parts of the fuel tank vent connector and pipe before performing the work.**
- **After connecting the fuel tank vent hose, check that the fuel tank vent hose is securely connected by pulling the quick connector.**

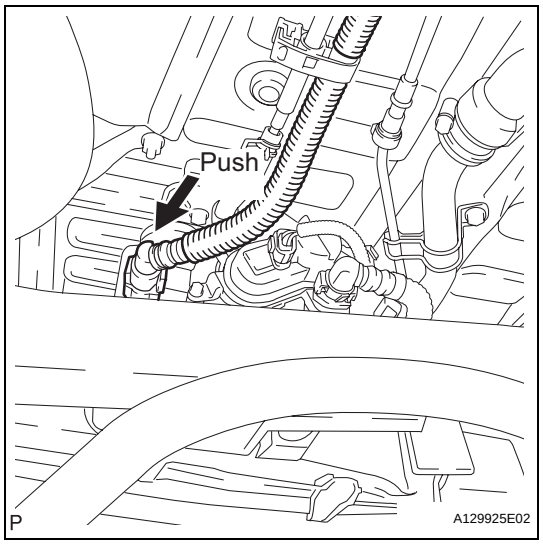

(e) Connect the fuel tank vent hose.
(1) Align the fuel tank vent hose connector with the pipe, then push in the fuel tank vent connector until the retainer makes a "click" sound to connect the fuel tank vent hose to the charcoal canister.
NOTICE:
- **Check that there are no scratches or foreign objects on the disconnected parts of the fuel tank vent connector and pipe before performing the work.**
- **After connecting the fuel tank vent hose, check that the fuel tank vent hose is securely connected by pulling the quick connector.**

2. CONNECT CABLE TO NEGATIVE BATTERY TERMINAL
Torque: 3.9 N*m (40 kgf*cm, 35 in.*lbf)

3. CHECK FOR FUEL LEAKAGE (See page FU-7)

EC

VACUUM SWITCHING VALVE

COMPONENTS

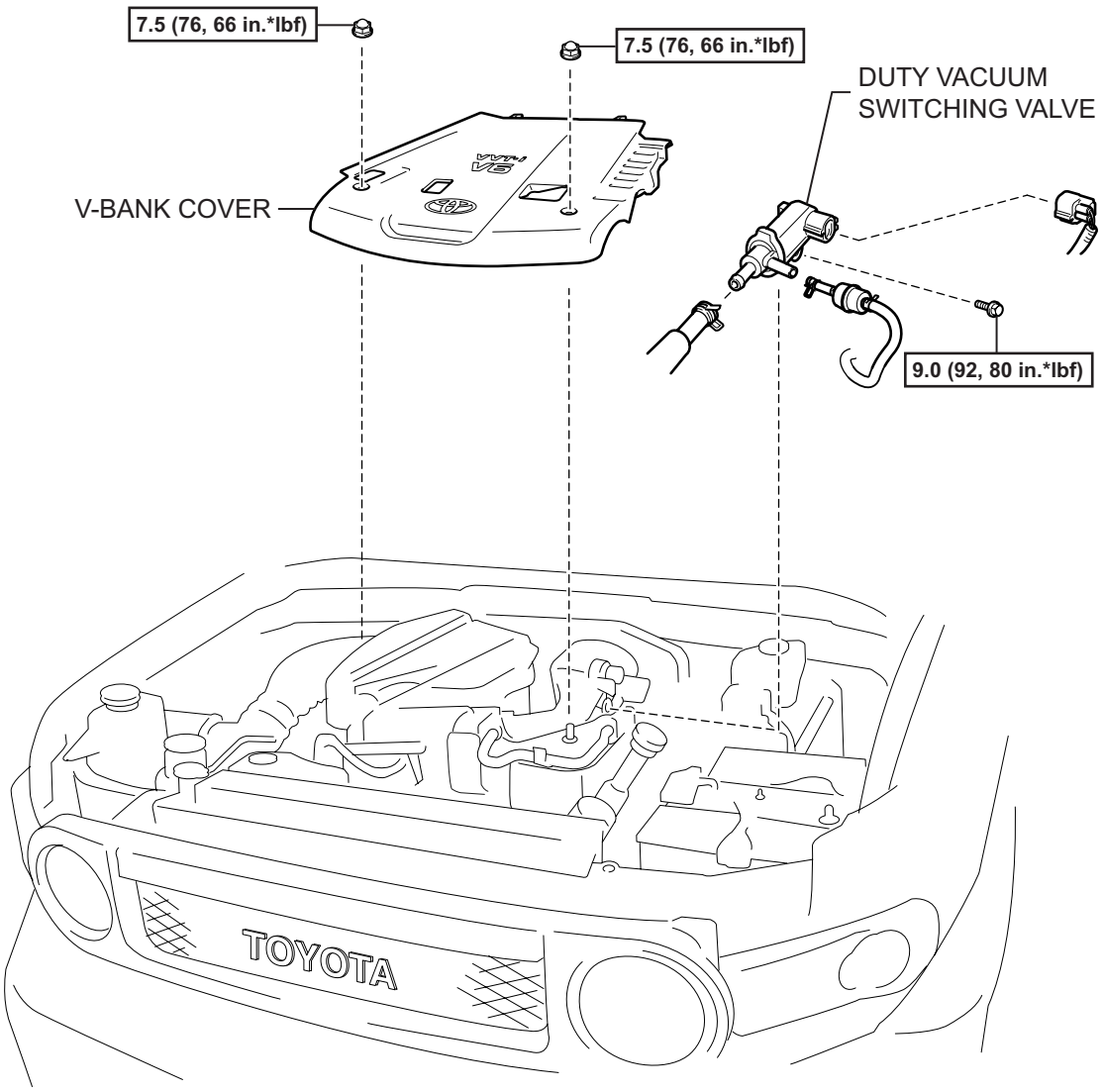

N*m (kgf*cm, ft*lbf) : Specified torque

T

A129949E01

REMOVAL

1. **DISCONNECT CABLE FROM NEGATIVE BATTERY TERMINAL**
2. **REMOVE V-BANK COVER (See page ES-428)**
3. **REMOVE DUTY VACUUM SWITCHING VALVE**
   (a) Disconnect the connector.
   (b) Disconnect the fuel vapor feed hose.

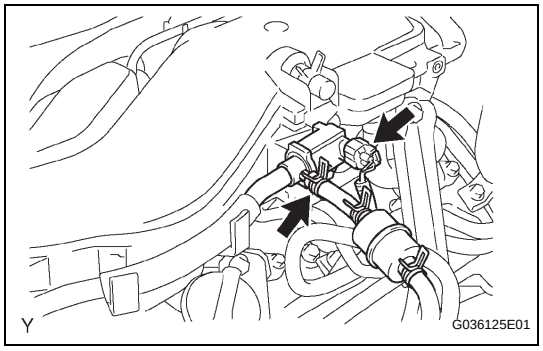

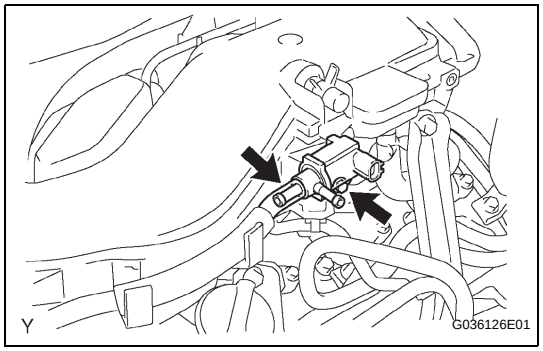

   (c) Remove the bolt, then separate the vacuum switching valve from the intake air surge tank.
   (d) Disconnect the hose, then remove the vacuum switching valve.

EC

INSPECTION

1. **INSPECT DUTY VACUUM SWITCHING VALVE**
   (a) Check the resistance.
      (1) Using an ohmmeter, measure the resistance between the terminals.
      Standard resistance

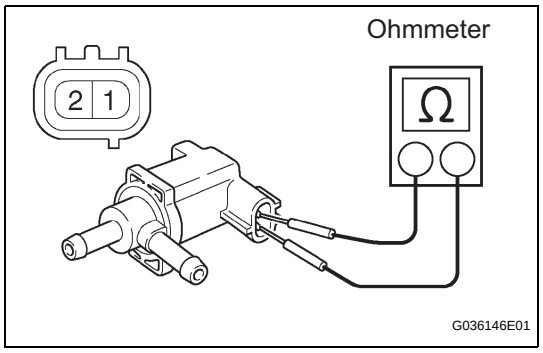

Tester Connection	Specified Condition
1 - 2	26 to 30 Ω at 20°C (68°F)

If the result is not as specified, replace vacuum switching valve No. 1.

   (b) Check vacuum switching valve No. 1 for ground.
      (1) Using an ohmmeter, check the resistance between each terminal and the body.
      Standard resistance

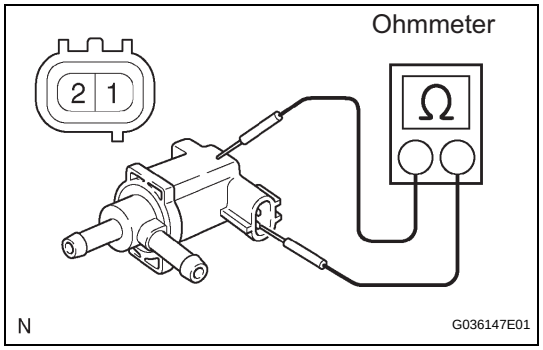

Tester Connection	Specified Condition
1 - Body	10 MΩ or higher
2 - Body	10 MΩ or higher

If the result is not as specified, replace vacuum switching valve No. 1.

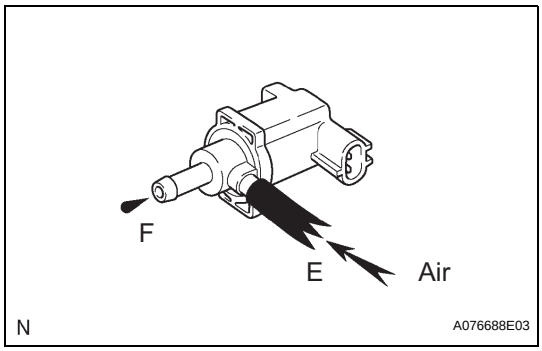

(c) Check the operation.
(1) Check that air does not flow from port E to port F.
If the operation is not as specified, replace vacuum switching valve No. 1.

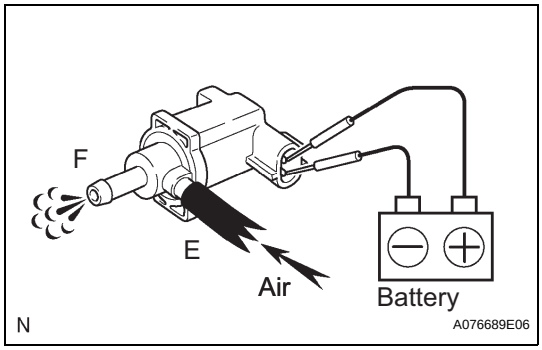

(2) Apply battery voltage across the terminals.
(3) Check that air flows from port E to port F.
If the operation is not as specified, replace vacuum switching valve No. 1.

EC

INSTALLATION

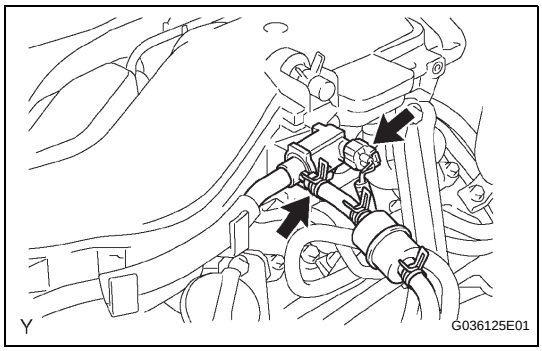

1. INSTALL DUTY VACUUM SWITCHING VALVE
(a) Connect the hose to the vacuum switching valve.
(b) Install the vacuum switching valve with the bolt.
Torque: 9.0 N*m (92 kgf*cm, 80 in.*lbf)

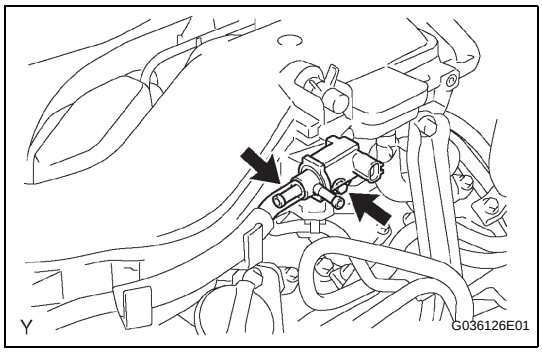

(c) Connect the vapor feed hose.
(d) Connect the connector.

2. INSTALL V-BANK COVER (See page ES-431)

3. CONNECT CABLE TO NEGATIVE BATTERY TERMINAL
Torque: 3.9 N*m (40 kgf*cm, 35 in.*lbf)

VENTILATION VALVE

COMPONENTS

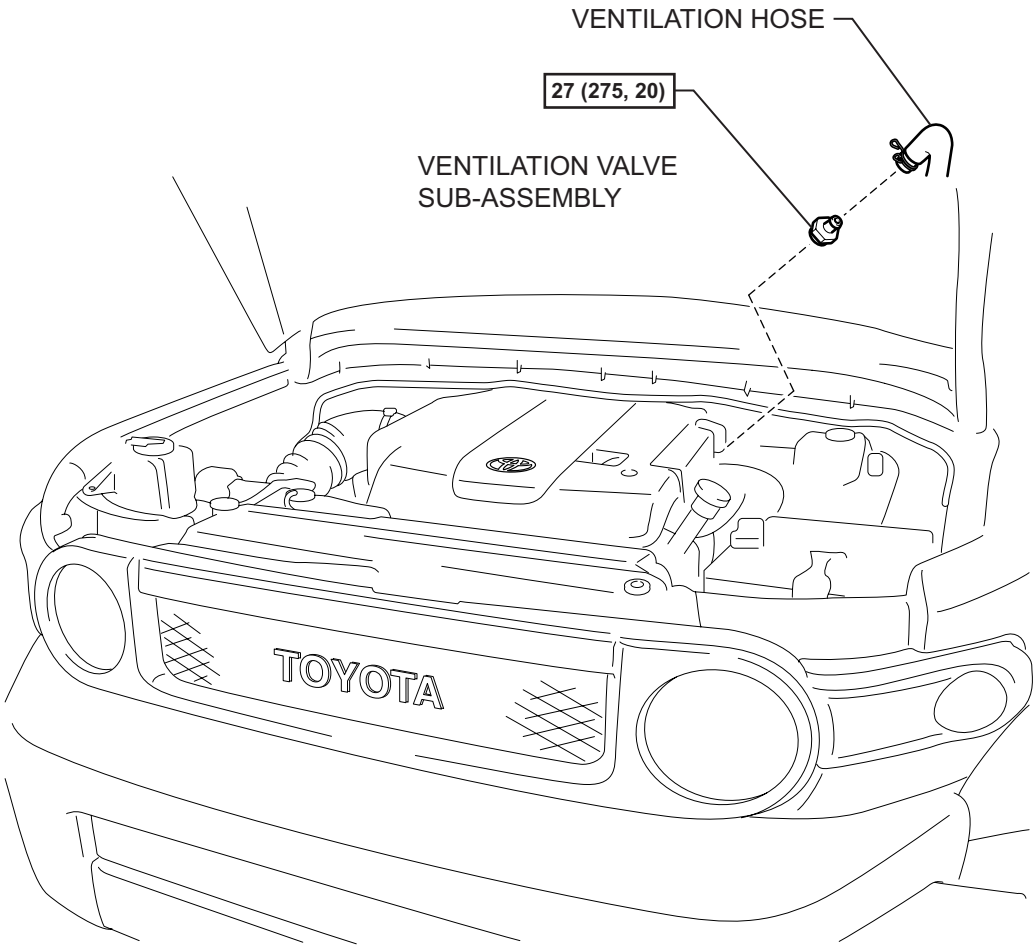

N*m (kgf*cm, ft*lbf) : Specified torque

T

A129935E01

EC

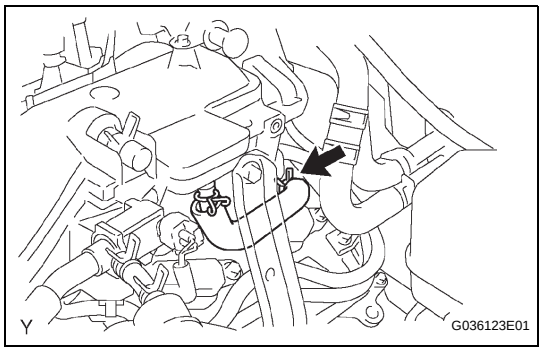

REMOVAL

1. REMOVE VENTILATION VALVE SUB-ASSEMBLY

(a) Disconnect the ventilation hose.

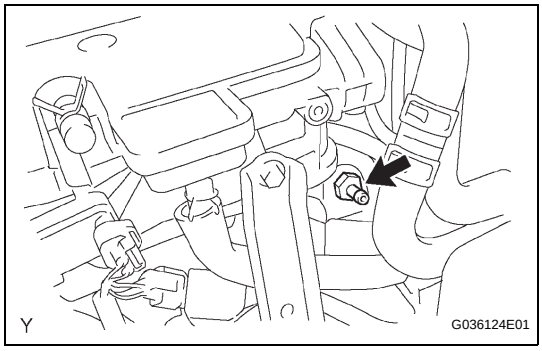

(b) Remove the ventilation valve.

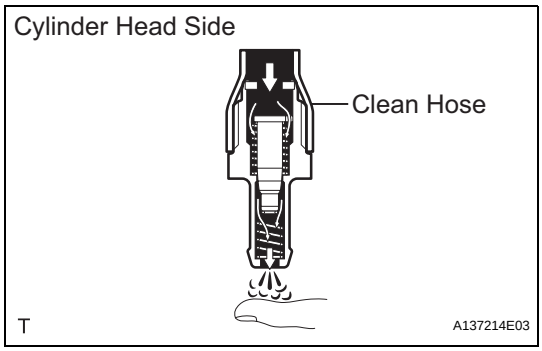

INSPECTION

1. INSPECT VENTILATION VALVE SUB-ASSEMBLY

(a) Check the operation.

(1) Install a clean hose as shown in the illustration.

(2) Blow air into the cylinder head side and check that the air passes through freely.
CAUTION:
Do not suck air through the ventilation valve. Petroleum substances inside the ventilation valve are harmful.

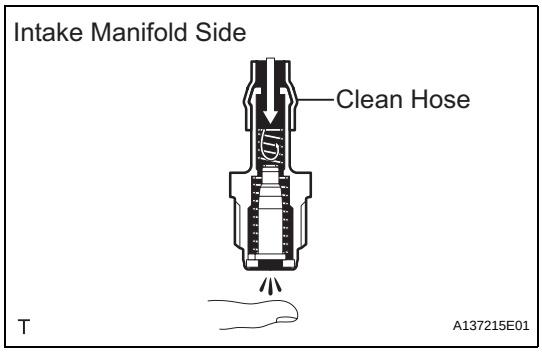

(3) Blow air into the intake manifold side and check that the air does not pass through freely.
If the operation is not as specified, replace the ventilation valve.

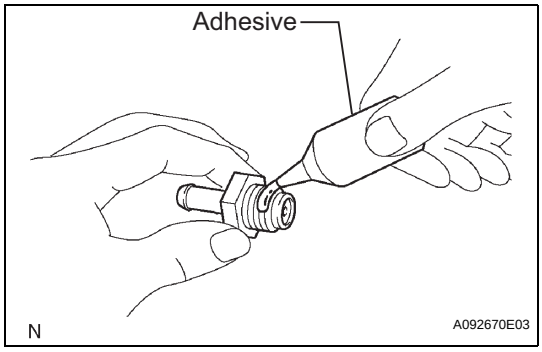

INSTALLATION

1. INSTALL VENTILATION VALVE SUB-ASSEMBLY

(a) Apply adhesive to 2 or 3 threads of the valve.
Adhesive:
Toyota Genuine Adhesive 1324, Three Bond 1344 or the equivalent.

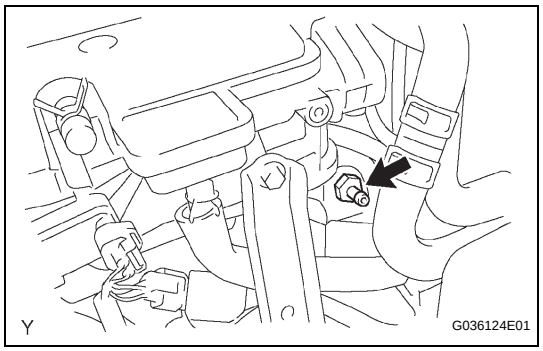

(b) Install the ventilation valve.
Torque: 27 N*m (275 kgf*cm, 20 ft.*lbf)

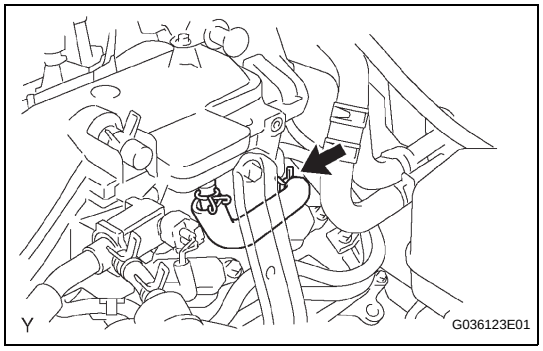

(c) Connect the ventilation hose.

AIR FUEL RATIO SENSOR

COMPONENTS

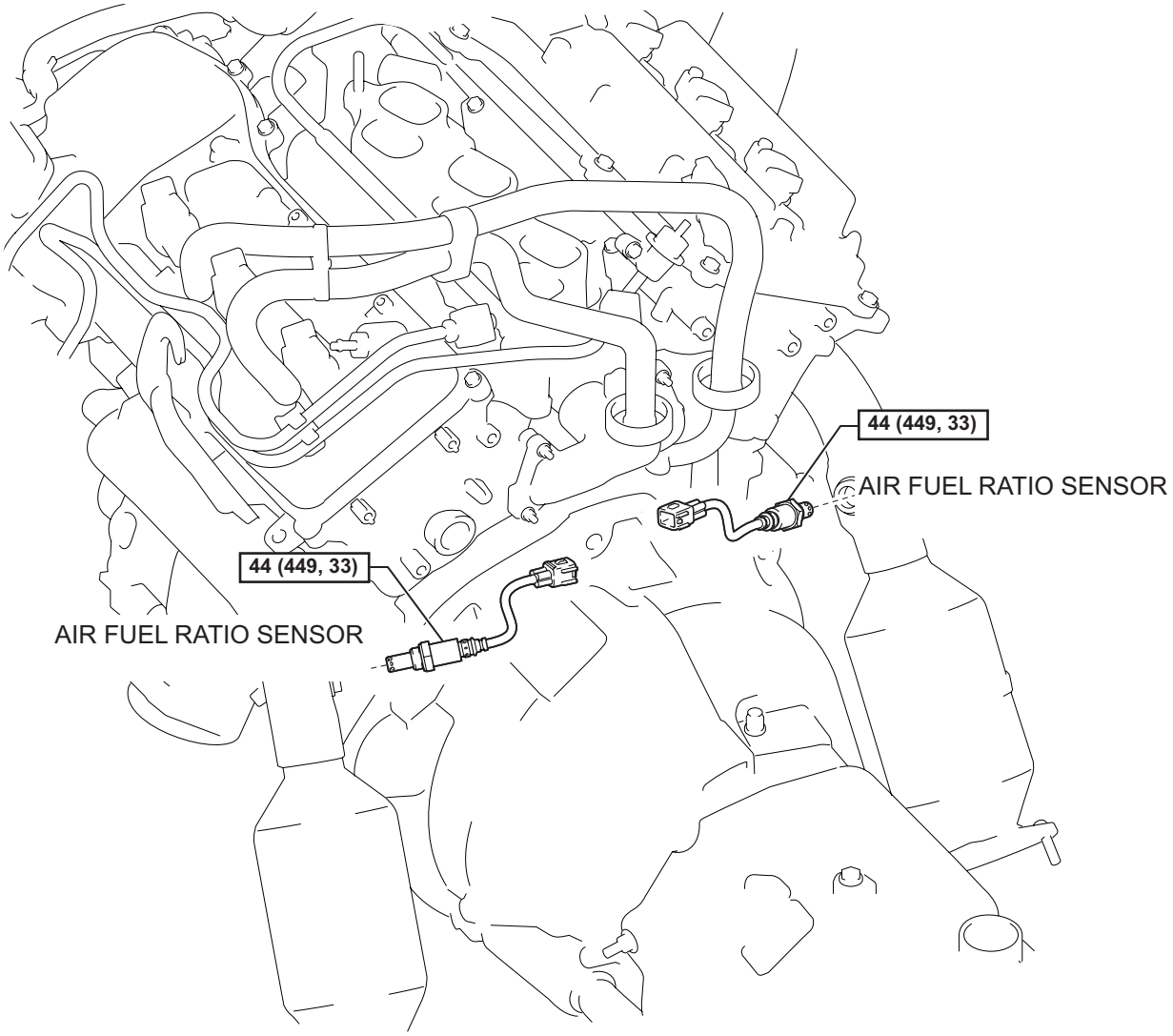

N*m (kgf*cm, ft*lbf) : Specified torque

A129979E01

REMOVAL

CAUTION:
- **Wear protective gloves when removing the sensor.**
- **The exhaust pipe assembly is extremely hot immediately after the engine has stopped.**
- **Confirm that the exhaust pipe assembly has cooled down before removing it.**

1. DISCONNECT CABLE FROM NEGATIVE BATTERY TERMINAL

2. REMOVE AIR FUEL RATIO SENSOR

(a) Remove the 3 bolts, then remove the No. 2 exhaust manifold stay. (for LH Bank)

(b) Disconnect the 2 air fuel ratio sensor connectors.

(c) Using SST, remove the 2 air fuel ratio sensors from the exhaust manifold.

SST 09224-00010

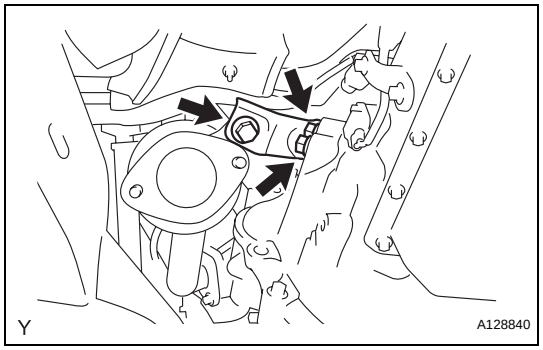

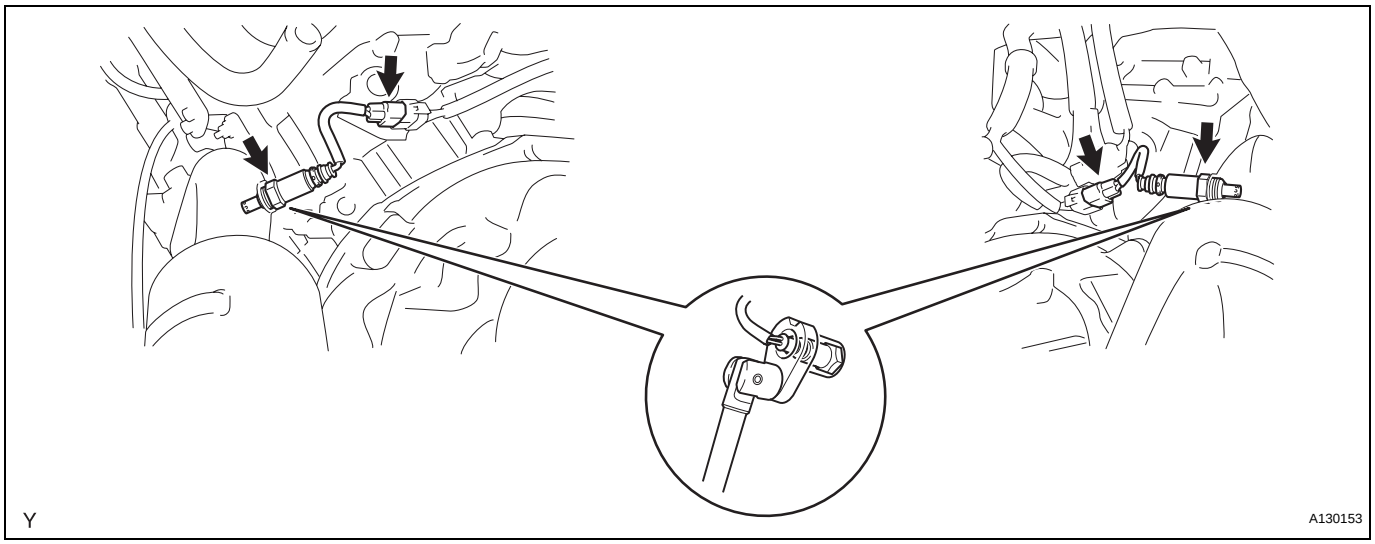

INSPECTION

1. REMOVE AIR FUEL RATIO SENSOR

(a) Check the resistance.

(1) Using an ohmmeter, measure the resistance between the terminals.

Standard resistance

Tester Connection	Specified Condition
1 (HT) - 2 (+B)	1.8 to 3.4 Ω at 20°C (68°F)
1 (HT) - 4 (E)	10 kΩor higher

If the result is not as specified, replace the air fuel ratio sensor.

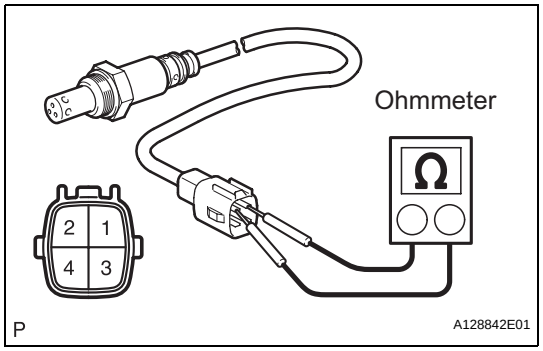

INSTALLATION

1. INSTALL AIR FUEL RATIO SENSOR

(a) Using SST, install the 2 air fuel ratio sensors onto the exhaust manifold.
SST 09224-00010
Torque: 44 N*m (449 kgf*cm, 33 ft.*lbf)

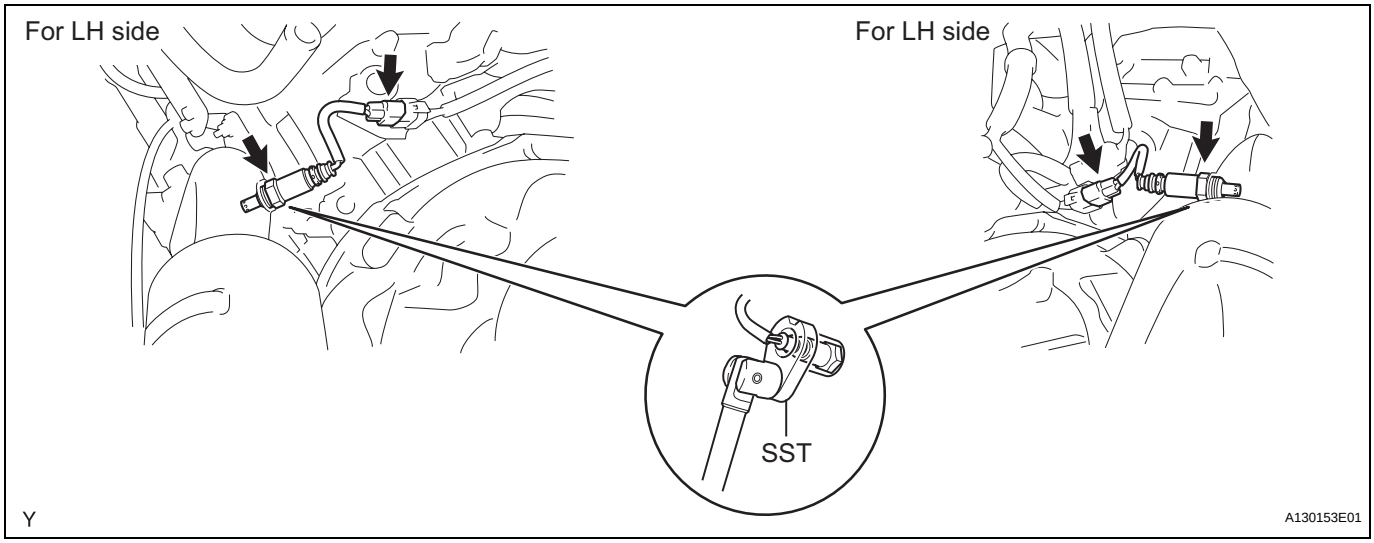

(b) Connect the 2 air fuel ratio sensor connectors.

(c) Install the exhaust manifold stay with the 3 bolts. (for LH Bank)

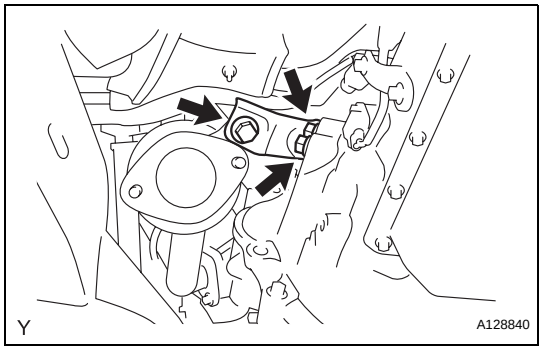

2. CONNECT CABLE TO NEGATIVE BATTERY TERMINAL
Torque: 3.9 N*m (40 kgf*cm, 35 in.*lbf)

HEATED OXYGEN SENSOR

COMPONENTS

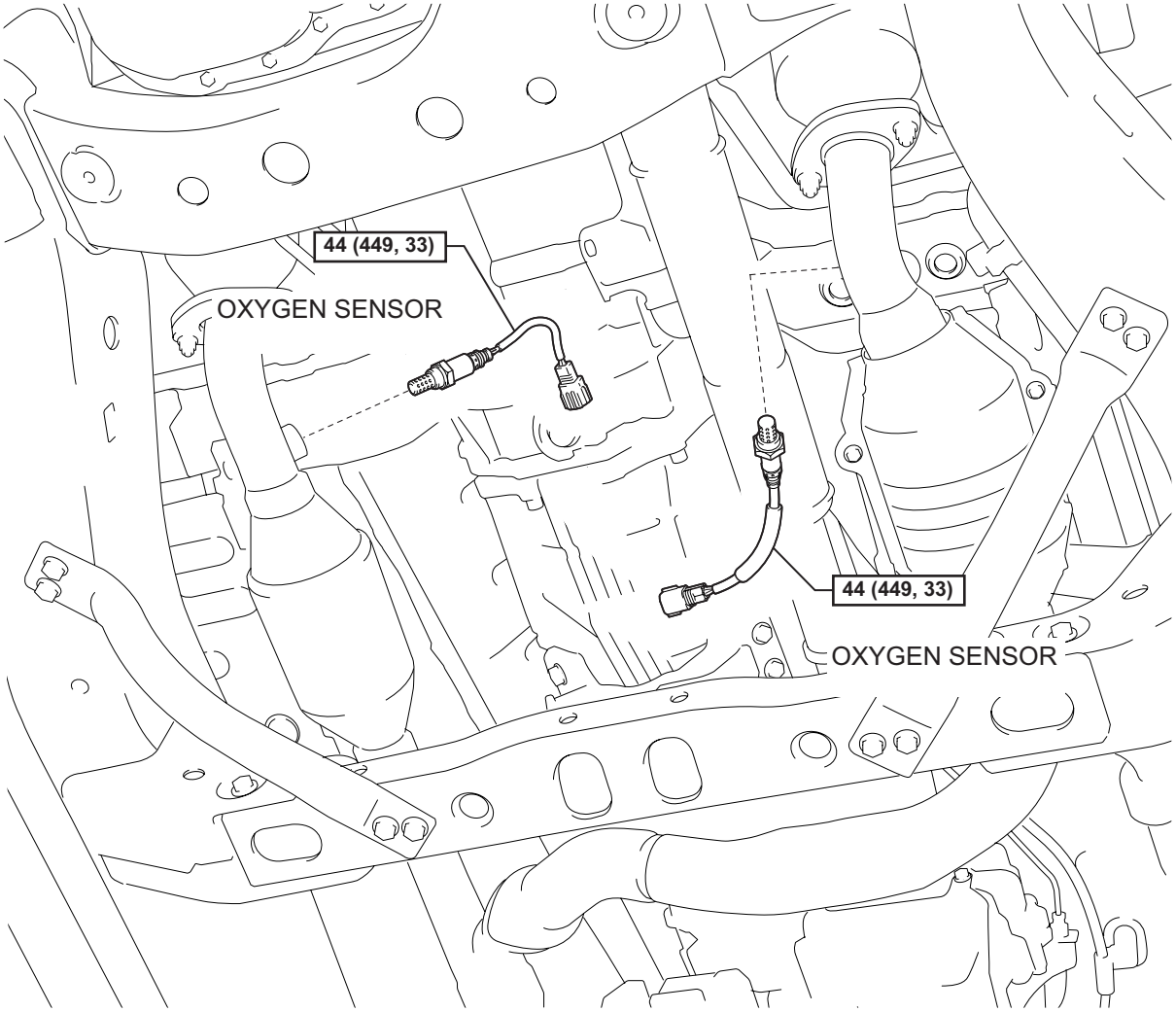

N*m (kgf*cm, ft*lbf) : Specified torque

P

A129978E01

EC

REMOVAL

1. DISCONNECT CABLE FROM NEGATIVE BATTERY TERMINAL

2. REMOVE HEATED OXYGEN SENSOR

(a) Disconnect the 2 heated oxygen sensors connectors.

(b) Using SST, remove the 2 heated oxygen sensors from the exhaust pipe.
SST 09224-00010

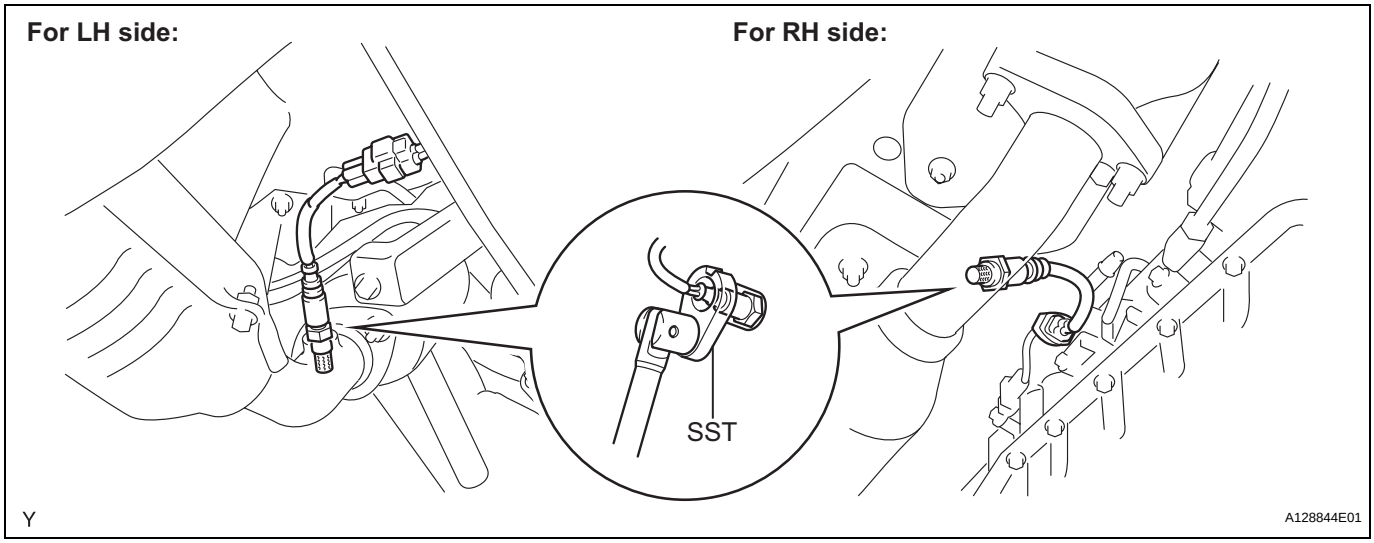

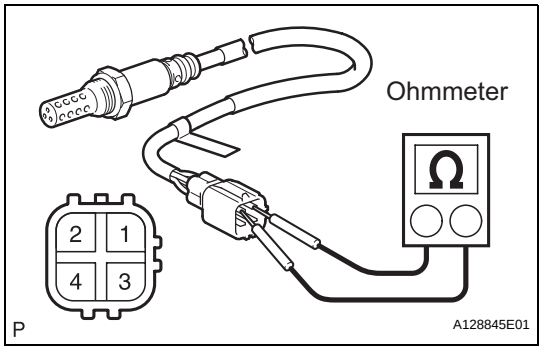

INSPECTION

1. INSPECT HEATED OXYGEN SENSOR

(a) Check the resistance.

(1) Using an ohmmeter, measure the resistance between the terminals.
Standard resistance

Tester Connection	Specified Condition
1 (HT) - 2 (+B)	11 to 16 Ω at 20°C (68°F)
1 (HT) - 4 (E)	10 kΩ or higher

INSTALLATION

1. INSTALL HEATED OXYGEN SENSOR

(a) Using SST, install the 2 heated oxygen sensors onto the exhaust pipe.

SST 09224-00010

Torque: 44 N*m (449 kgf*cm, 33 ft.*lbf)

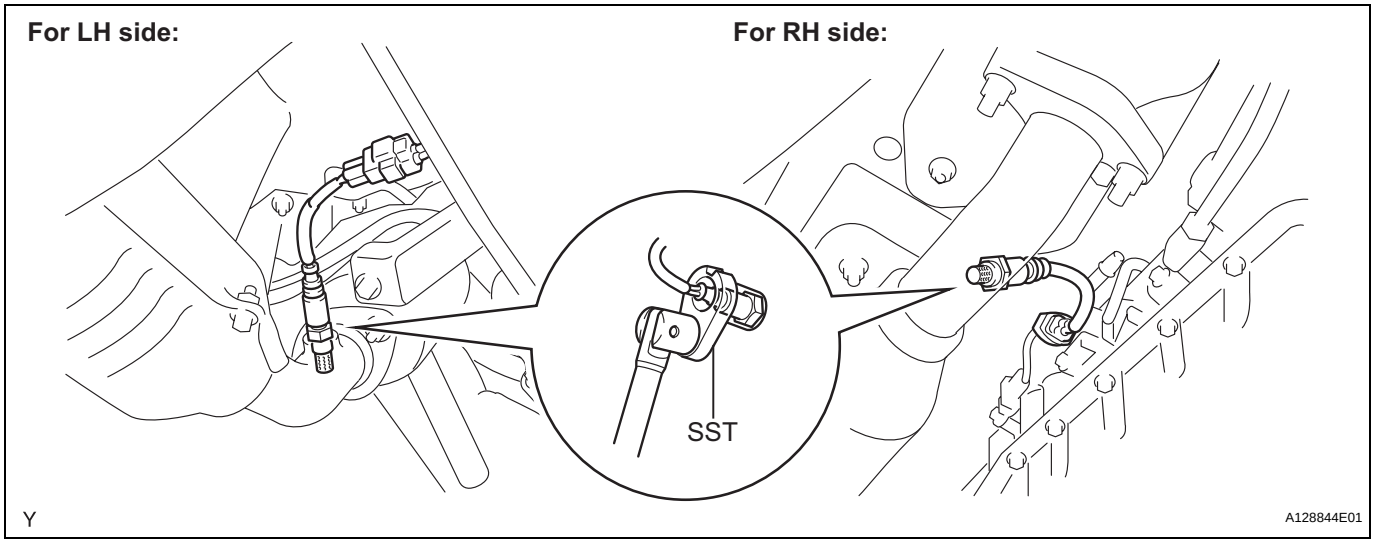

(b) Connect the 2 heated oxygen sensor connectors.

2. CONNECT CABLE TO NEGATIVE BATTERY TERMINAL

Torque: 3.9 N*m (40 kgf*cm, 35 in.*lbf)

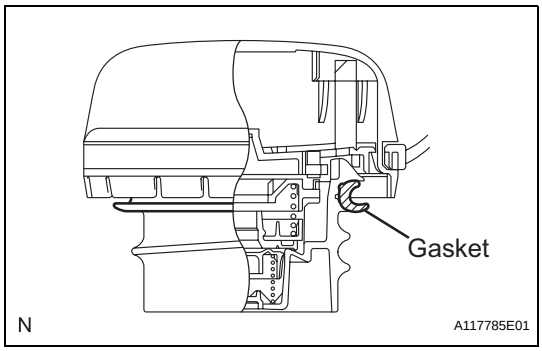

FUEL TANK CAP

ON-VEHICLE INSPECTION

1. INSPECT FUEL TANK CAP ASSEMBLY

(a) Check that there is no deformation or damage to fuel tank cap or gasket. If necessary replace the fuel tank cap.

SFI SYSTEM

PRECAUTION

1. INITIALIZATION

NOTICE:

- **Perform the RESET MEMORY (AT initialization) when replacing the automatic transmission assembly, engine assembly or ECM (See page AT-19).**
- **Perform the REGISTRATION (VIN registration) when replacing the ECM (See page ES-15).**
- **If the ECM has been replaced or RESET MEMORY (AT initialization) has been performed, set up the function of the ATF (Automatic Transmission Fluid) temperature warning light (See page AT-19).**

HINT:

Initialization can not be completed by only removing the battery.

2. FOR USING INTELLIGENT TESTER

CAUTION:

Observe the following items for safety reasons:

- Read its instruction books before using the tester.
- Prevent the tester cable from being caught on the pedals, shift lever and steering wheel when driving with the tester connected to the vehicle.
- When driving the vehicle for testing purposes using the tester, two persons are required. One is for driving the vehicle, and the other operates the tester.

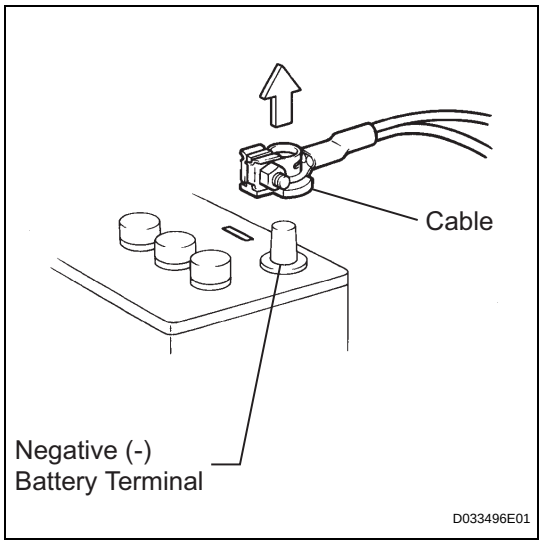

3. DISCONNECT AND RECONNECT CABLE OF NEGATIVE BATTERY TERMINAL

(a) Before performing electronic work, disconnect the cable from the negative (-) battery terminal in order to prevent it from shorting and burning out.

(b) Before disconnecting and reconnecting the battery cable, turn the ignition switch OFF and the headlight dimmer switch OFF. Then loosen the terminal nut completely. Do not damage the cable or terminal.

(c) When the battery cable is disconnected, the clock and radio settings and stored DTCs are erased. Therefore, before disconnecting the battery cable, make a notes of them.

NOTICE:

When the cable is disconnected from the negative (-) battery terminal, initialize the following system(s) after the cable is reconnected.

System name	See procedure
METER / GAUGE SYSTEM	ME-10

DEFINITION OF TERMS

Terms	Definitions
Monitor Description	Description of what ECM monitors and how detects malfunctions (monitoring purpose and details)
Related DTCs	A group of diagnostic trouble codes that are output by ECM based on same malfunction detection logic.
Typical Enabling Conditions	Preconditions that allow ECM to detect malfunctions. With all preconditions satisfied, ECM sets DTC when monitored value(s) exceeds malfunction threshold(s)
Sequence of Operation	Order of monitor priority, applied if multiple sensors and components involved in single malfunction detection process. Each sensor and component monitored in turn and not monitored until previous detection operation completed.
Required Sensors/Components	Sensors and components used by ECM to detect each malfunction.
Frequency of Operation	Number of times ECM checks for each malfunction during each driving cycle. "Once per driving cycle" means ECM only performs checks for that malfunction once during single driving cycle. "Continuous" means ECM performs checks for that malfunction whenever enabling conditions met.
Duration	Minimum time for which ECM must detect continuous deviation in monitored value(s) in order to set DTC. Timing begins when Typical Enabling Conditions met.
Malfunction Thresholds	Values, beyond which, ECM determines malfunctions exist and sets DTCs.
MIL Operation	Timing of MIL illumination after defect detected. "Immediate" means ECM illuminates MIL as soon as malfunction detected. "2 driving cycles" means ECM illuminates MIL if same malfunction detected second time during next sequential driving cycle.

PARTS LOCATION

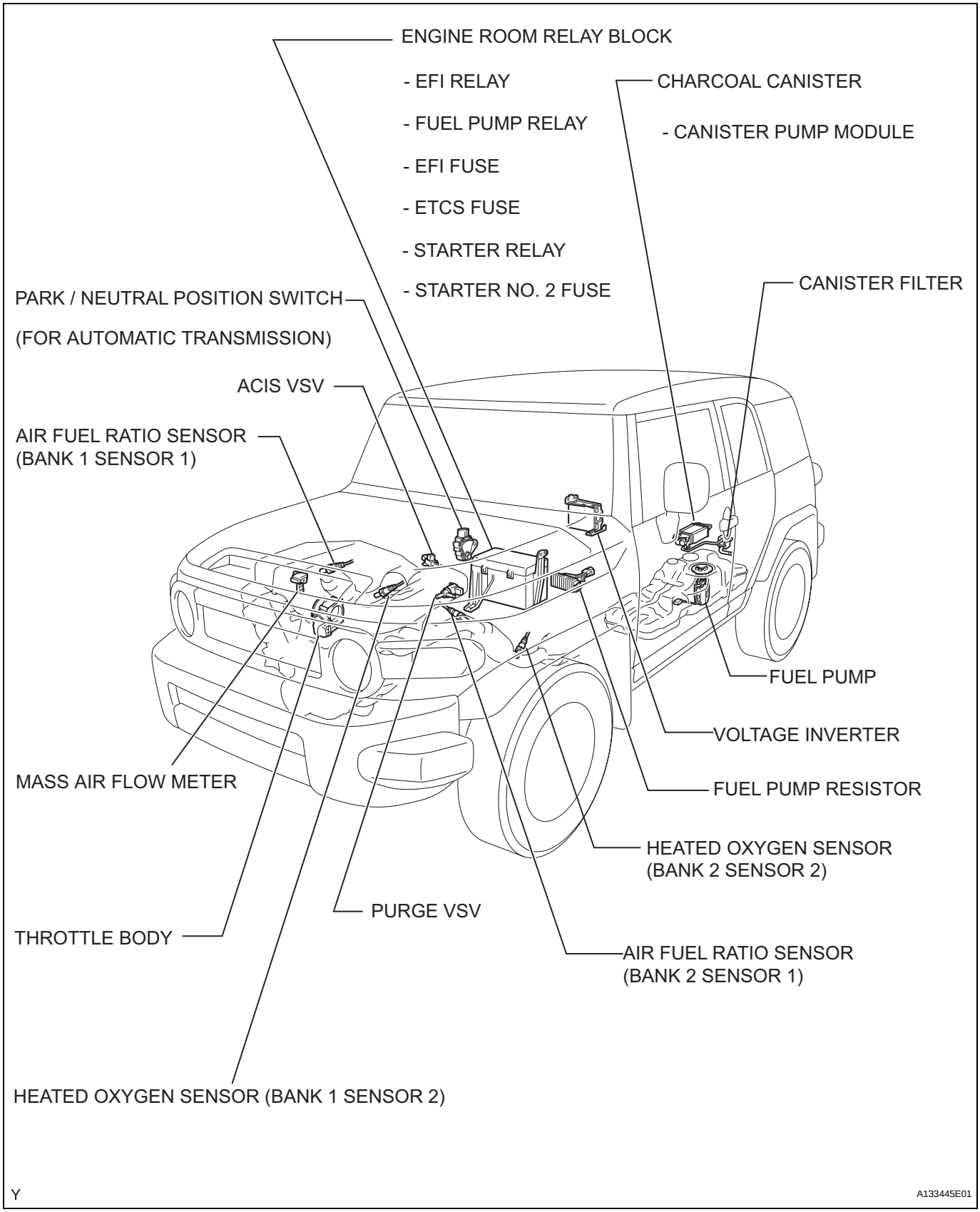

ES

ES

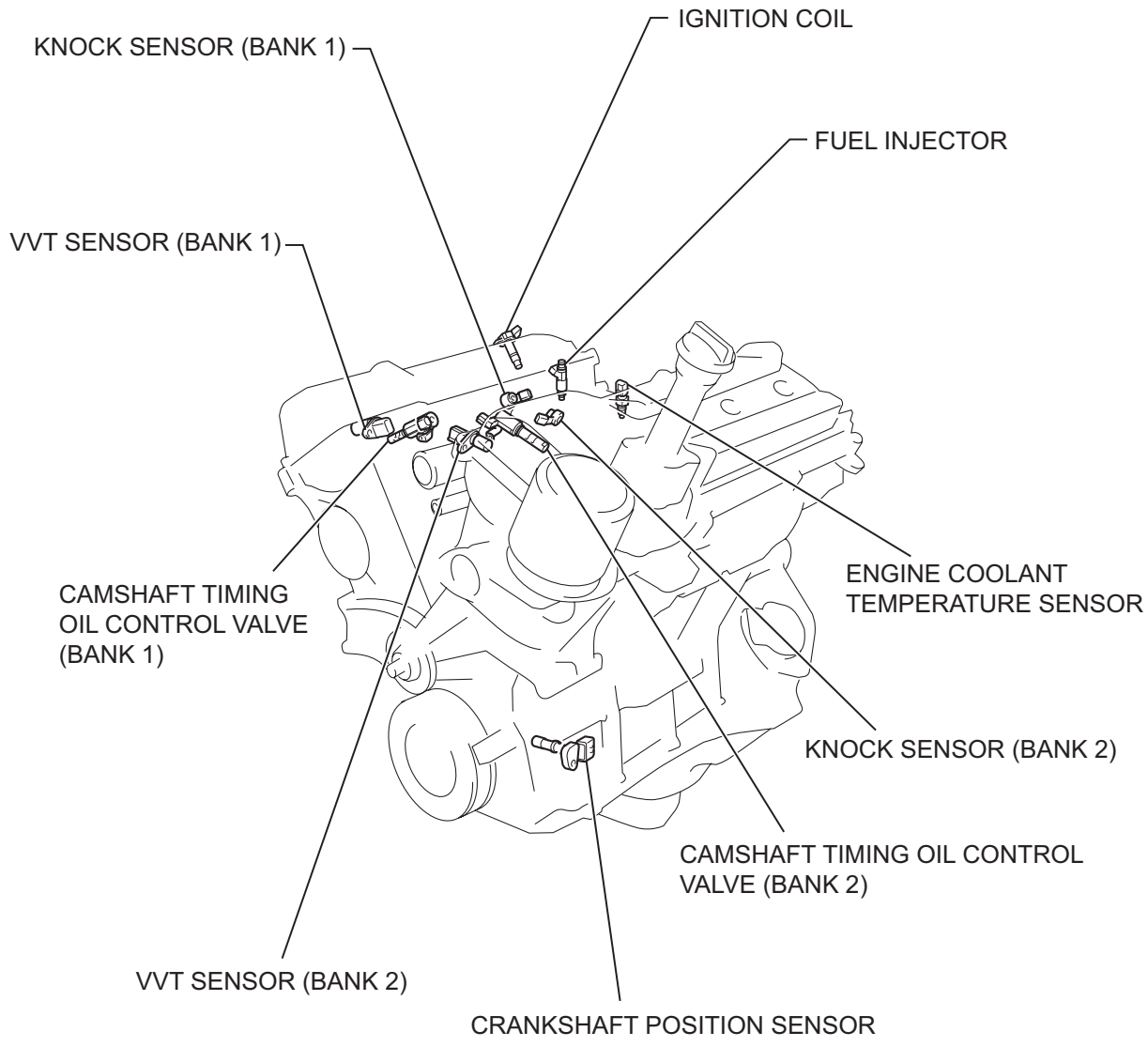

Y

A115960E02

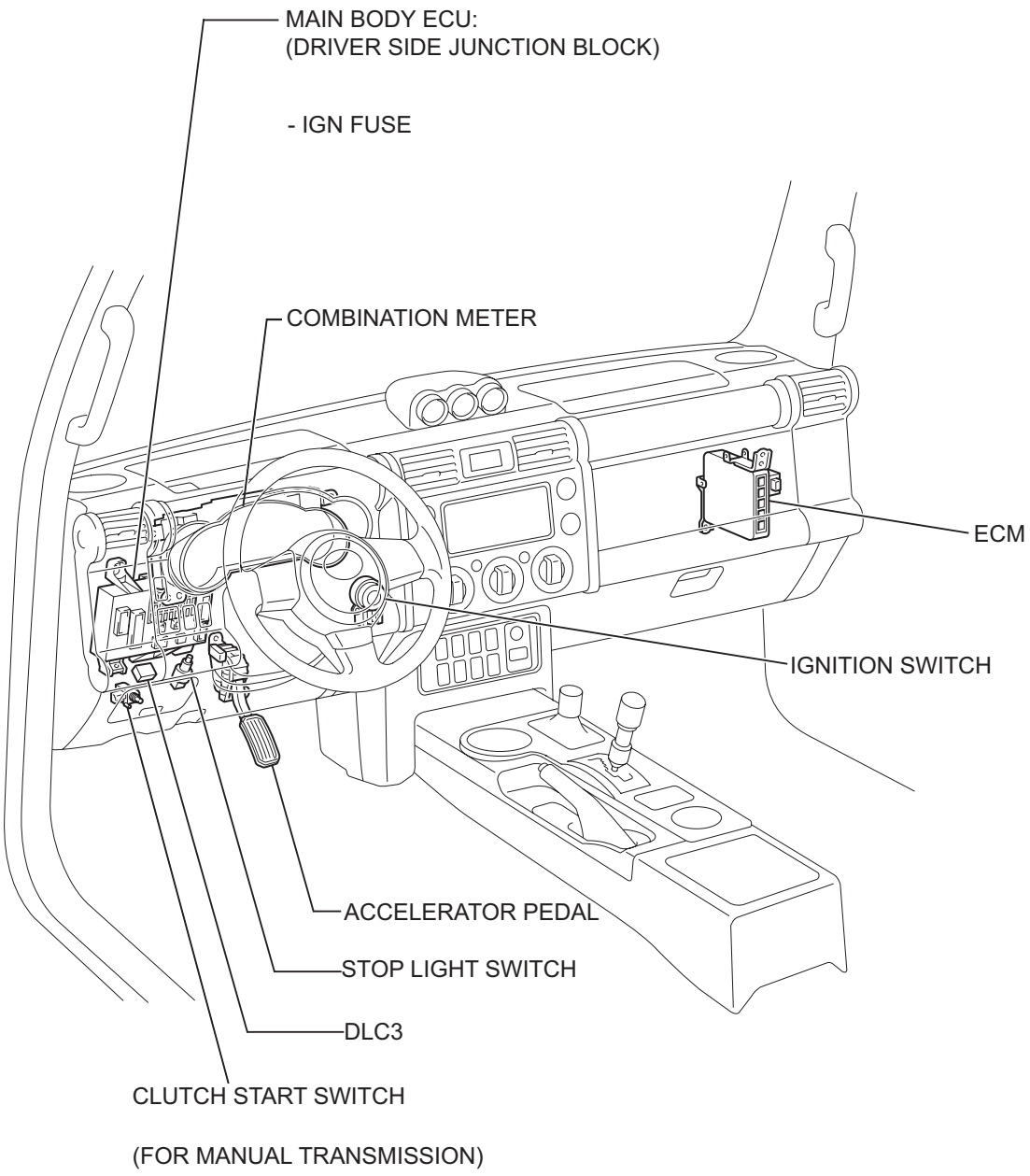
MAIN BODY ECU:
(DRIVER SIDE JUNCTION BLOCK)
- IGN FUSE
COMBINATION METER
ECM
IGNITION SWITCH
ACCELERATOR PEDAL
STOP LIGHT SWITCH
DLC3
CLUTCH START SWITCH
(FOR MANUAL TRANSMISSION)
Y
A133444E02

ES

SYSTEM DIAGRAM

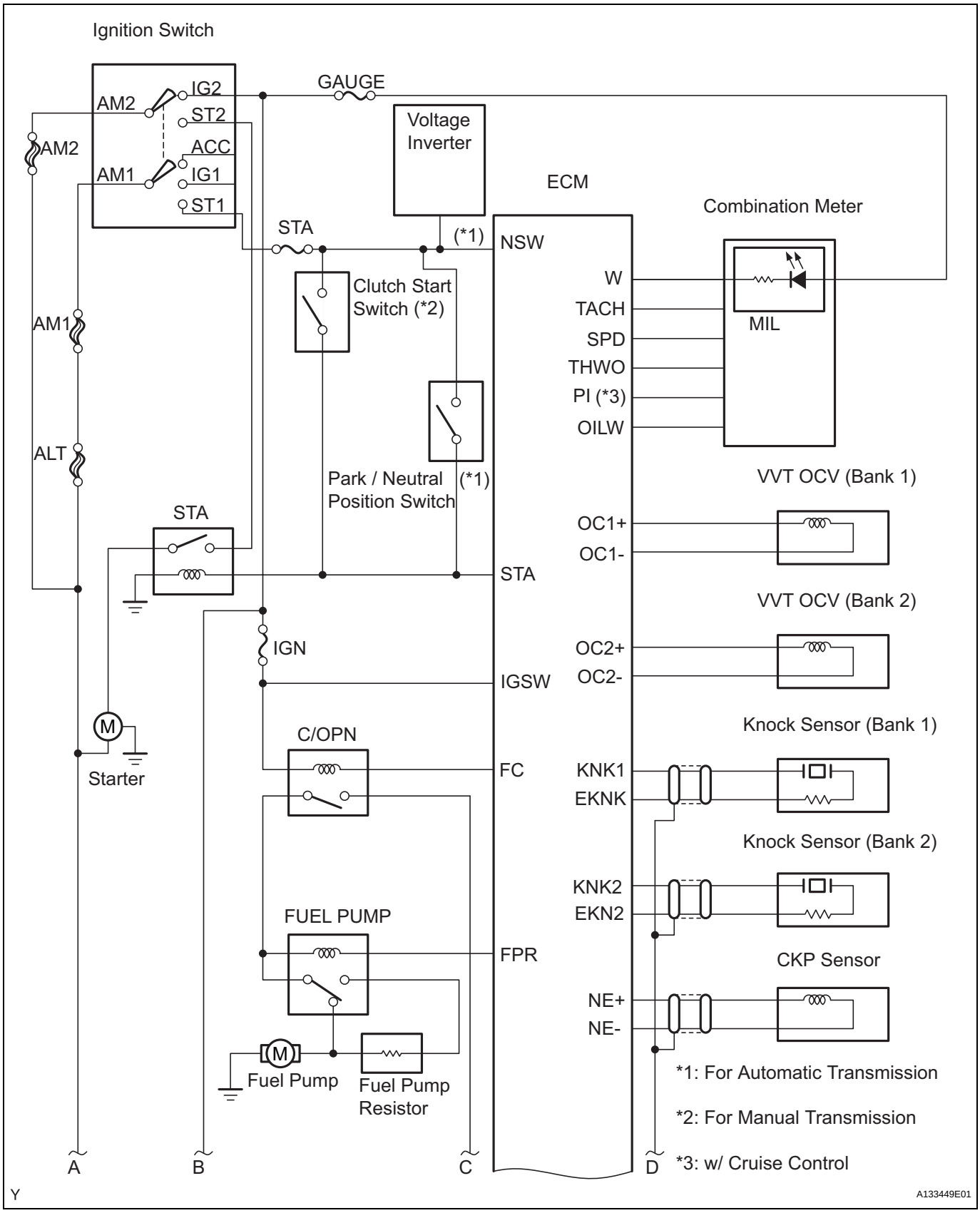

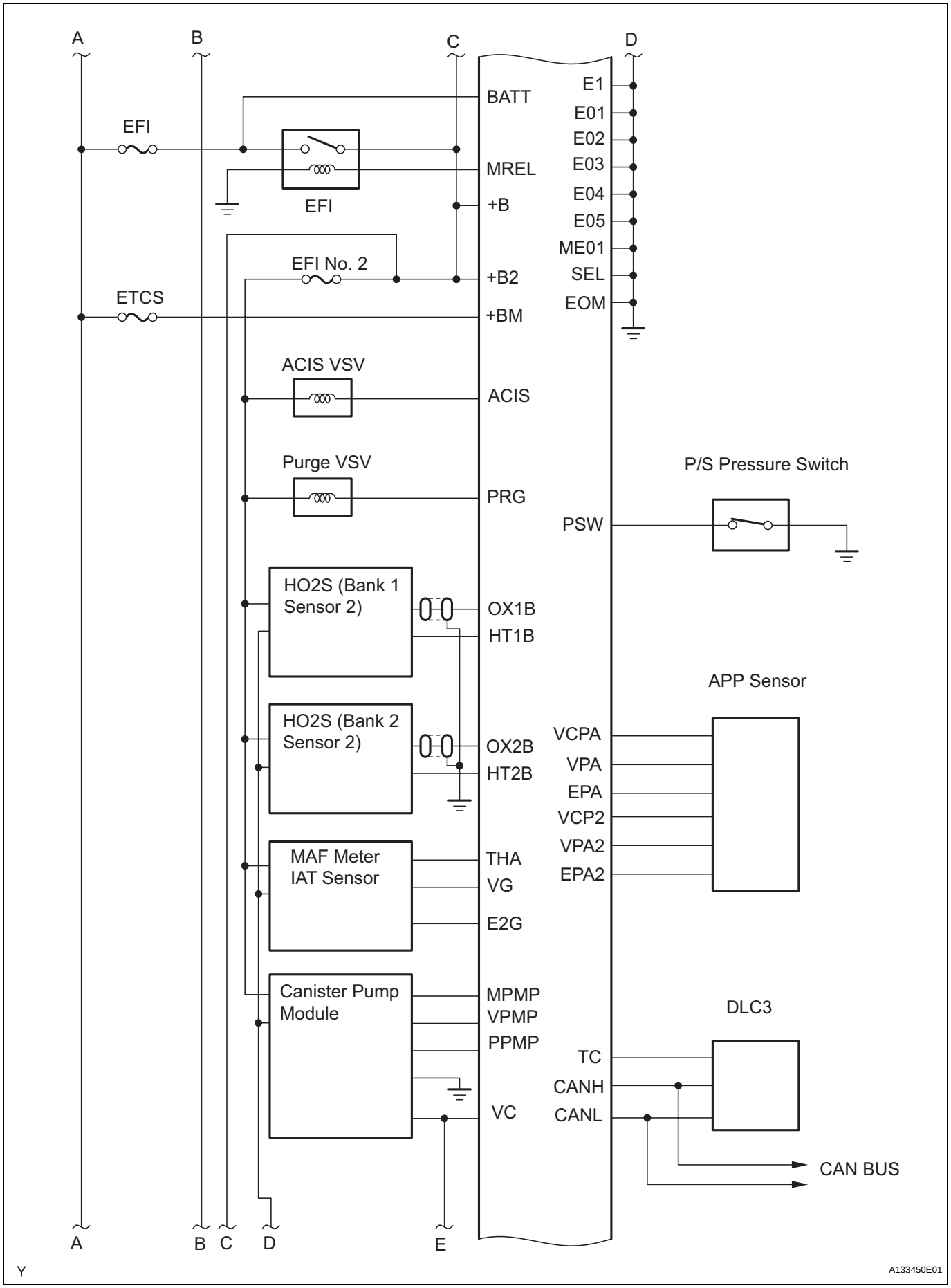
A
B
C
D
EFI
EFI
BATT
MREL
+B
EFI No. 2
+B2
ETCS
+BM
ACIS VSV
ACIS
Purge VSV
PRG
HO2S (Bank 1 Sensor 2)
OX1B
HT1B
HO2S (Bank 2 Sensor 2)
OX2B
HT2B
MAF Meter IAT Sensor
THA
VG
E2G
Canister Pump Module
MPMP
VPMP
PPMP
VC
E1
E01
E02
E03
E04
E05
ME01
SEL
EOM
P/S Pressure Switch
PSW
APP Sensor
VCPA
VPA
EPA
VCP2
VPA2
EPA2
DLC3
TC
CANH
CANL
CAN BUS
A
B
C
D
E
Y
A133450E01

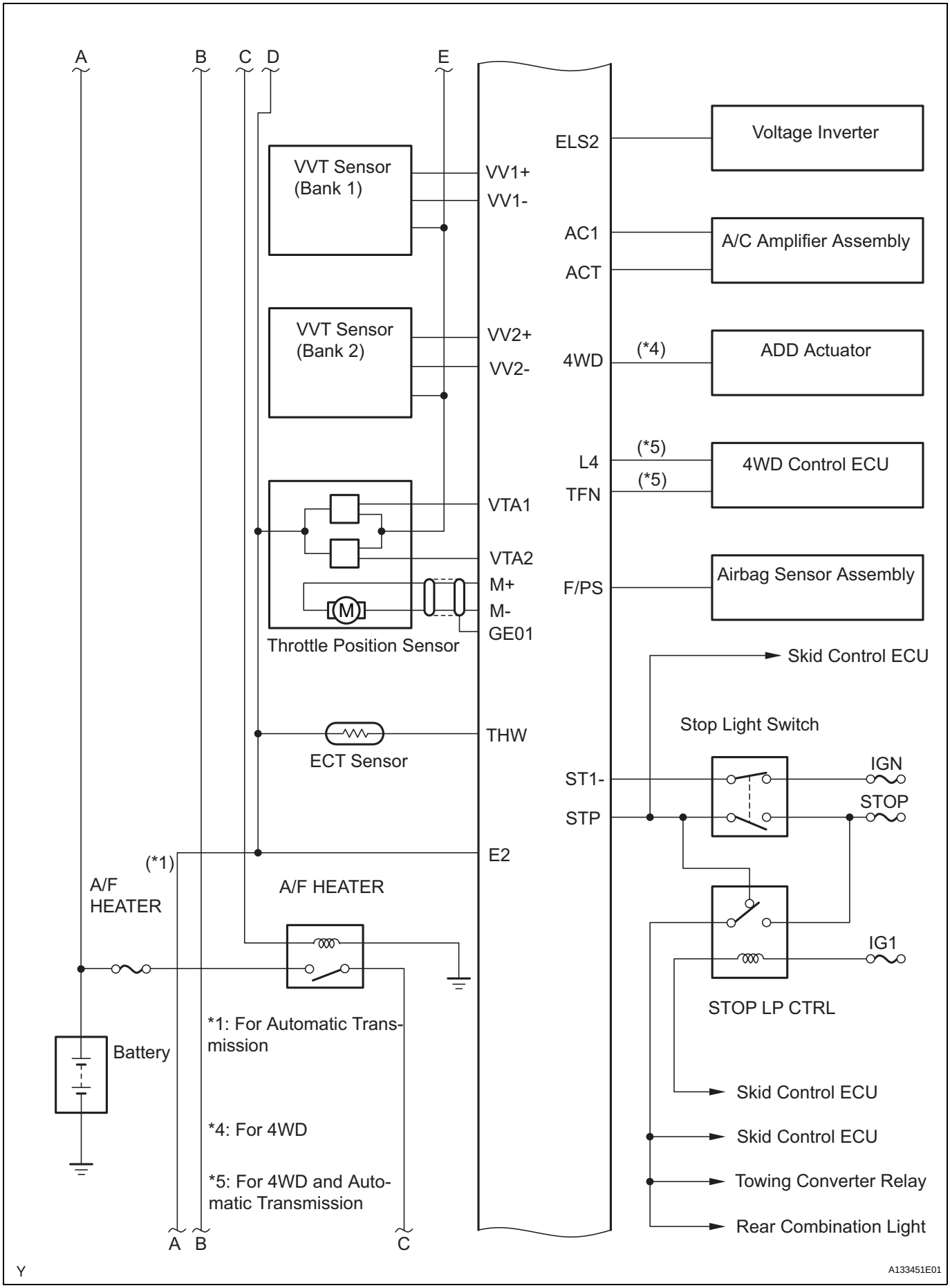
A
B
C
D
E
VVT Sensor (Bank 1)
VV1+
VV1-
VVT Sensor (Bank 2)
VV2+
VV2-
VTA1
VTA2
M+
M-
GE01
Throttle Position Sensor
THW
ECT Sensor
E2
(*1)
A/F HEATER
A/F HEATER
Battery
*1: For Automatic Transmission
*4: For 4WD
*5: For 4WD and Automatic Transmission
ELS2
Voltage Inverter
AC1
ACT
A/C Amplifier Assembly
4WD
(*4)
ADD Actuator
L4
TFN
(*5)
(*5)
4WD Control ECU
F/PS
Airbag Sensor Assembly
Skid Control ECU
Stop Light Switch
ST1-
STP
IGN
STOP
IG1
STOP LP CTRL
Skid Control ECU
Skid Control ECU
Towing Converter Relay
Rear Combination Light
A
B
C
Y
A133451E01

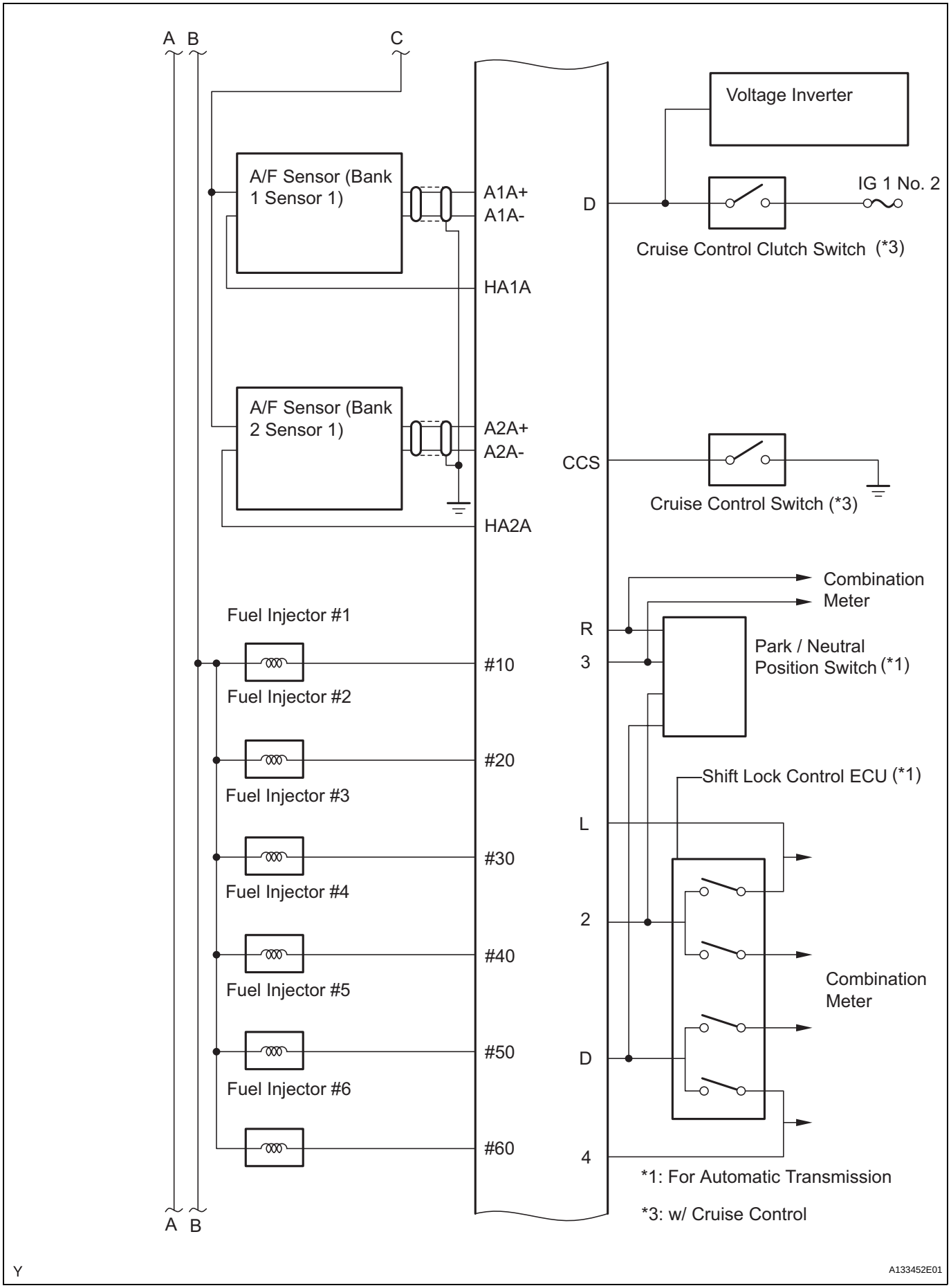
A B
C
Voltage Inverter
A/F Sensor (Bank 1 Sensor 1)
A1A+
A1A-
D
IG 1 No. 2
Cruise Control Clutch Switch (*3)
HA1A
A/F Sensor (Bank 2 Sensor 1)
A2A+
A2A-
CCS
Cruise Control Switch (*3)
HA2A
Combination Meter
Fuel Injector #1
R
Park / Neutral Position Switch (*1)
3
#10
Fuel Injector #2
#20
Fuel Injector #3
Shift Lock Control ECU (*1)
L
#30
Fuel Injector #4
2
#40
Fuel Injector #5
Combination Meter
#50
D
Fuel Injector #6
#60
4
*1: For Automatic Transmission
*3: w/ Cruise Control
A B
Y
A133452E01

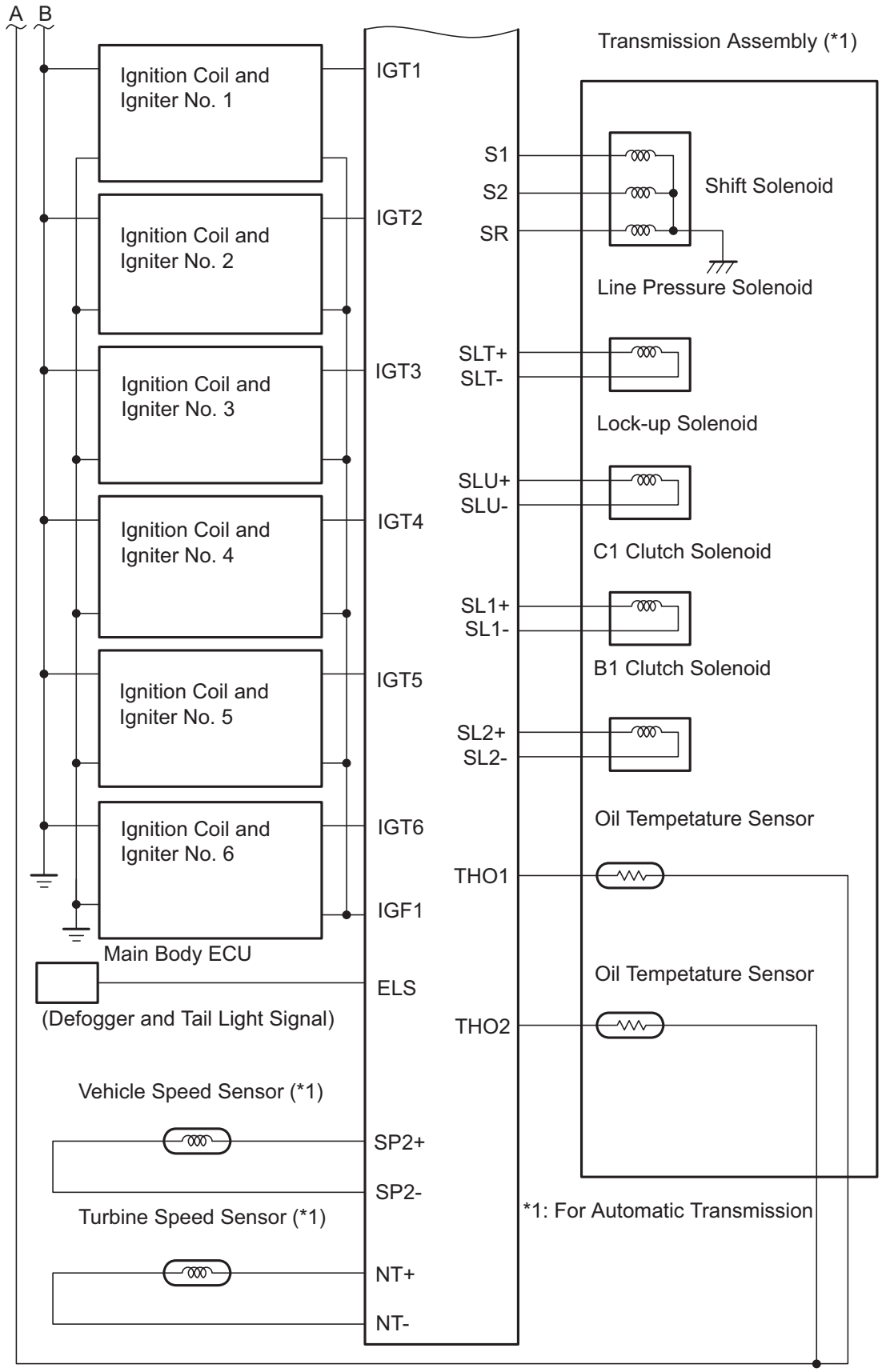

Y

A133453E01

HOW TO PROCEED WITH TROUBLESHOOTING

HINT:
*: Use the intelligent tester.

1	VEHICLE BROUGHT TO WORKSHOP

NEXT

2	CUSTOMER PROBLEM ANALYSIS

NEXT

3	CONNECT INTELLIGENT TESTER TO DLC3*

HINT:
If the display indicates a communication fault in the tester, inspect the DLC3.

NEXT

4	CHECK DTC AND FREEZE FRAME DATA*

HINT:
Record or print DTCs and freeze frame data, if necessary.

NEXT

5	CLEAR DTC AND FREEZE FRAME DATA*

NEXT

6	CONDUCT VISUAL INSPECTION

NEXT

7	SET CHECK MODE DIAGNOSIS*

NEXT

8	CONFIRM PROBLEM SYMPTOMS

HINT:
If the engine does not start, perform steps 10 and 12 first.

Result	Proceed To
Malfunction does not occur	A
Malfunction occurs	B

B → GO TO STEP 10

A

9	SIMULATE SYMPTOMS

NEXT

ES

10	CHECK DTC*

Result	Proceed To
Malfunction code	A
No code	B

B → GO TO STEP 12

A

11	REFER TO DTC CHART

NEXT

12	CONDUCT BASIC INSPECTION

Result	Proceed To
Malfunctioning parts not confirmed	A
Malfunctioning parts confirmed	B

B → GO TO STEP 17

A

13	REFER TO PROBLEM SYMPTOMS TABLE

Result	Proceed To
Malfunctioning circuit confirmed	A
Malfunctioning parts confirmed	B

B → GO TO STEP 17

A

14	CHECK ECM POWER SOURCE CIRCUIT

NEXT

15	CONDUCT CIRCUIT INSPECTION

Result	Proceed To
Malfunction not confirmed	A
Malfunction confirmed	B

B → GO TO STEP 18

A

16	CHECK FOR INTERMITTENT PROBLEMS

NEXT

17	CONDUCT PARTS INSPECTION

NEXT

18	IDENTIFY PROBLEM

NEXT

19	ADJUST AND/OR REPAIR

NEXT

20	CONDUCT CONFIRMATION TEST

NEXT

END

ES

CHECK FOR INTERMITTENT PROBLEMS

HINT:
Intelligent tester only:
Inspect the vehicle's ECM using check mode. Intermittent problems are easier to detect with an intelligent tester when the ECM is in check mode. In check mode, the ECM uses 1trip detection logic, which is more sensitive to malfunctions than normal mode (default), which uses 2trip detection logic.

1. Clear DTCs (See page ES-38).
2. Switch the ECM from normal mode to check mode using an intelligent tester (See page ES-42).
3. Perform a simulation test.
4. Check and wiggle the harness(es), connector(s) and terminal(s).

BASIC INSPECTION

When a malfunction is not confirmed by the DTC check, troubleshooting should be carried out in all circuits considered to be possible causes of the problem. In many cases, by carrying out the basic engine check shown in the following flowchart, the location of the problem can be found quickly and efficiently. Therefore, using this check is essential when engine troubleshooting.

1 CHECK BATTERY VOLTAGE

NOTICE:
Carry out this check with the engine stopped and ignition switch OFF.

Result	Proceed To
11 V or more	OK
Below 11 V	NG

NG → **CHARGE OR REPLACE BATTERY**

OK

2 CHECK WHETHER ENGINE WILL CRANK

NG → **PROCEED TO PROBLEM SYMPTOMS TABLE**

OK

3 CHECK WHETHER ENGINE STARTS

NG → **GO TO STEP 6**

OK

4 CHECK AIR FILTER

(a) Visually check that the air filter is not excessively contaminated with dirt or oil.

NG → **REPLACE AIR FILTER**

OK

5 CHECK IDLING SPEED

NG → **TROUBLESHOOT IDLING SPEED AND PROCEED TO NEXT STEP**

OK

6	CHECK FUEL PRESSURE

NG → TROUBLESHOOT FUEL PRESSURE AND PROCEED TO NEXT STEP

OK

7	CHECK FOR SPARK

NG → TROUBLESHOOT SPARK AND PROCEED TO NEXT STEP

OK

PROCEED TO PROBLEM SYMPTOMS TABLE

REGISTRATION

NOTICE:
The Vehicle Identification Number (VIN) must be input into the replacement ECM.
HINT:
The VIN is in the form of a 17-digit alphanumeric vehicle identification number. An intelligent tester is required to resister the VIN.

1. DESCRIPTION

This registration section consists of three parts, Input Instructions, Read VIN and Write VIN.

(a) Input Instructions: Explains the general VIN input instructions using an intelligent tester.
(b) Read VIN: Explains the VIN reading process in a flowchart. This process allows the VIN stored in the ECM to be read, in order to confirm that the two VINs, provided with the vehicle and stored in the vehicle's ECM, are the same.
(c) Write VIN: Explains the VIN writing process in a flowchart. This process allows the VIN to be input into the ECM. If the ECM is changed, or the VIN and VIN do not match, the VIN can be registered, or overwritten in the ECM by following this procedure.

2. INPUT INSTRUCTIONS

(a) Intelligent tester
  (1) The arrow buttons (UP, DOWN, RIGHT and LEFT) and numerical buttons (0 to 9) are used, in order to input the VIN.
(b) Cursor Operation
  (1) To move the cursor around the tester screen, press the RIGHT and LEFT buttons.
(c) Alphabetical Character Input
  (1) Press the UP and DOWN buttons to select the desired alphabetical character.
  (2) After selection, the cursor should move.
(d) Numeric Character Input
  (1) Press the numerical button corresponding to the number that you want to input.
  (2) After input, the cursor should move.
    HINT:
    Numerical characters can be selected by using the UP and DOWN buttons.
(e) Correction
  (1) When correcting the input character(s), put the cursor onto the character using the RIGHT or LEFT buttons.
  (2) Select or input the correct character using the UP/DOWN buttons, or the numerical buttons.
(f) Finishing Input Operation
  (1) Make sure that the input VIN matches the vehicle VIN after input.
  (2) Press the ENTER button on the tester.

3. READ VIN

(a) Confirm the vehicle VIN.
(b) Connect an intelligent tester to the DLC3.
(c) Turn the ignition switch ON.
(d) Turn the tester ON.
(e) Select the following menu items: DIAGNOSIS / ENHANCED OBD II / VIN.

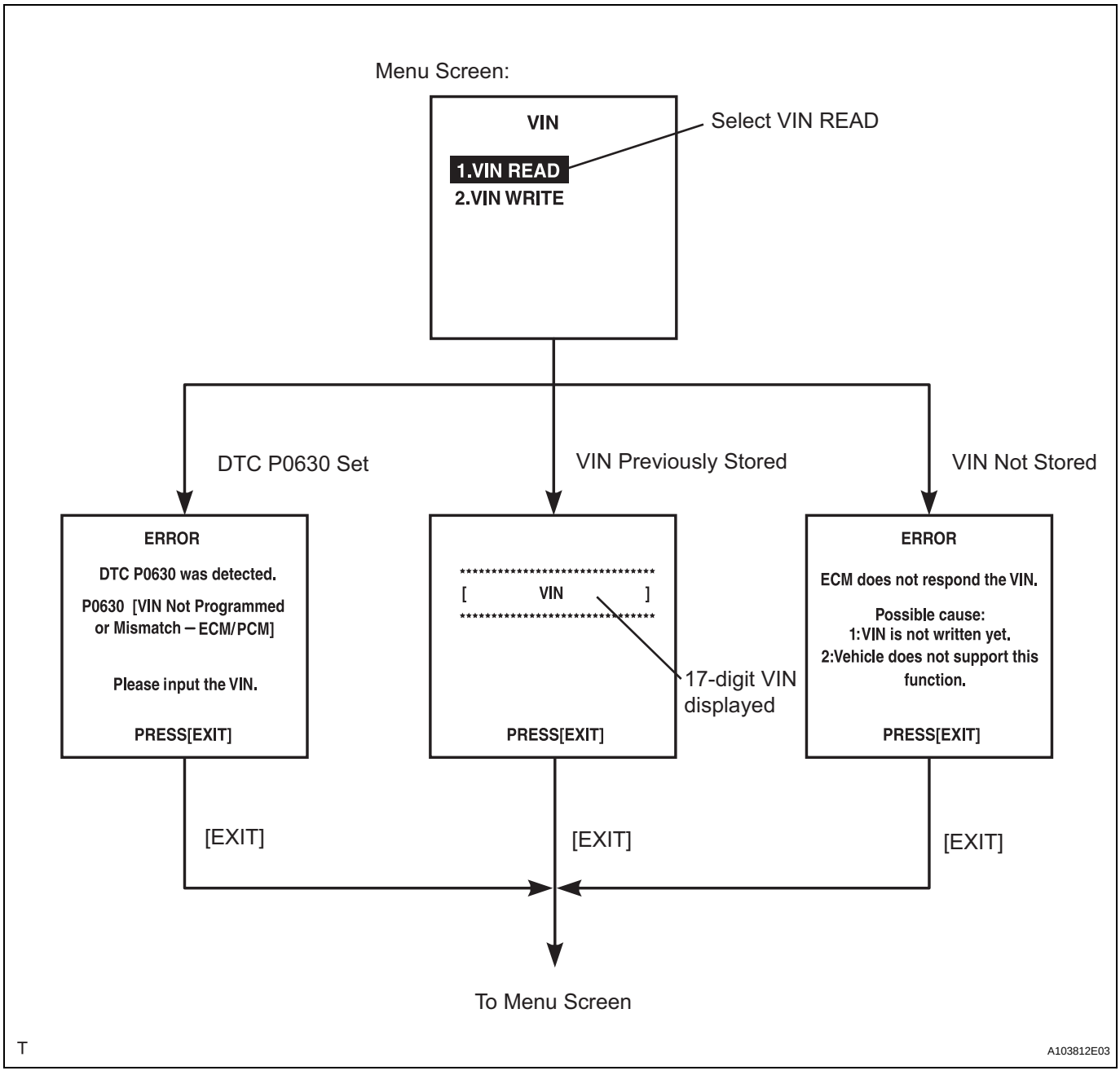

4. WRITE VIN

(a) Confirm the vehicle VIN.
(b) Connect an intelligent tester to the DLC3.
(c) Turn the ignition switch ON.
(d) Turn the tester ON.

(e) Select the following menu items: DIAGNOSIS / ENHANCED OBD II / VIN.

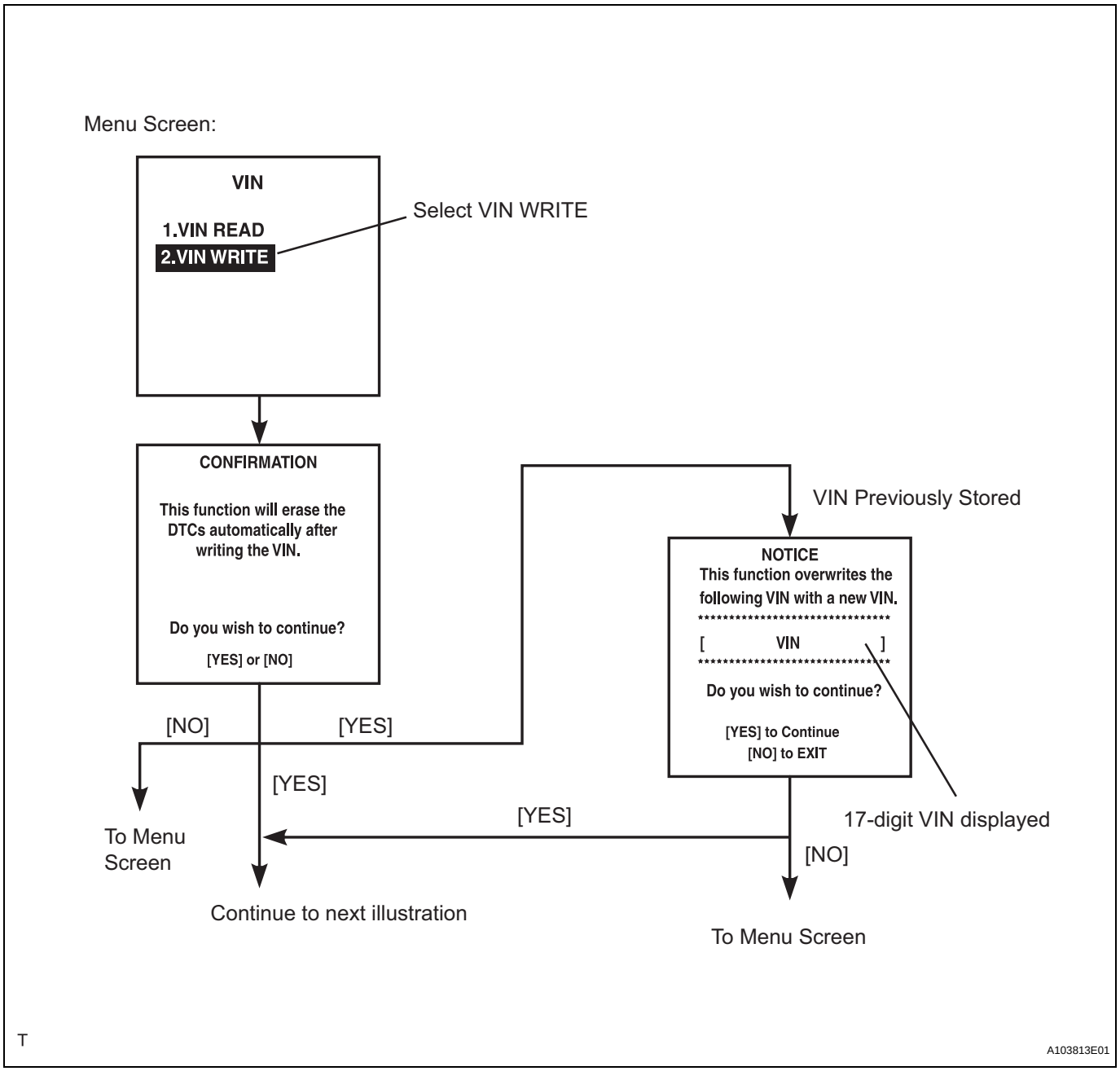

ES

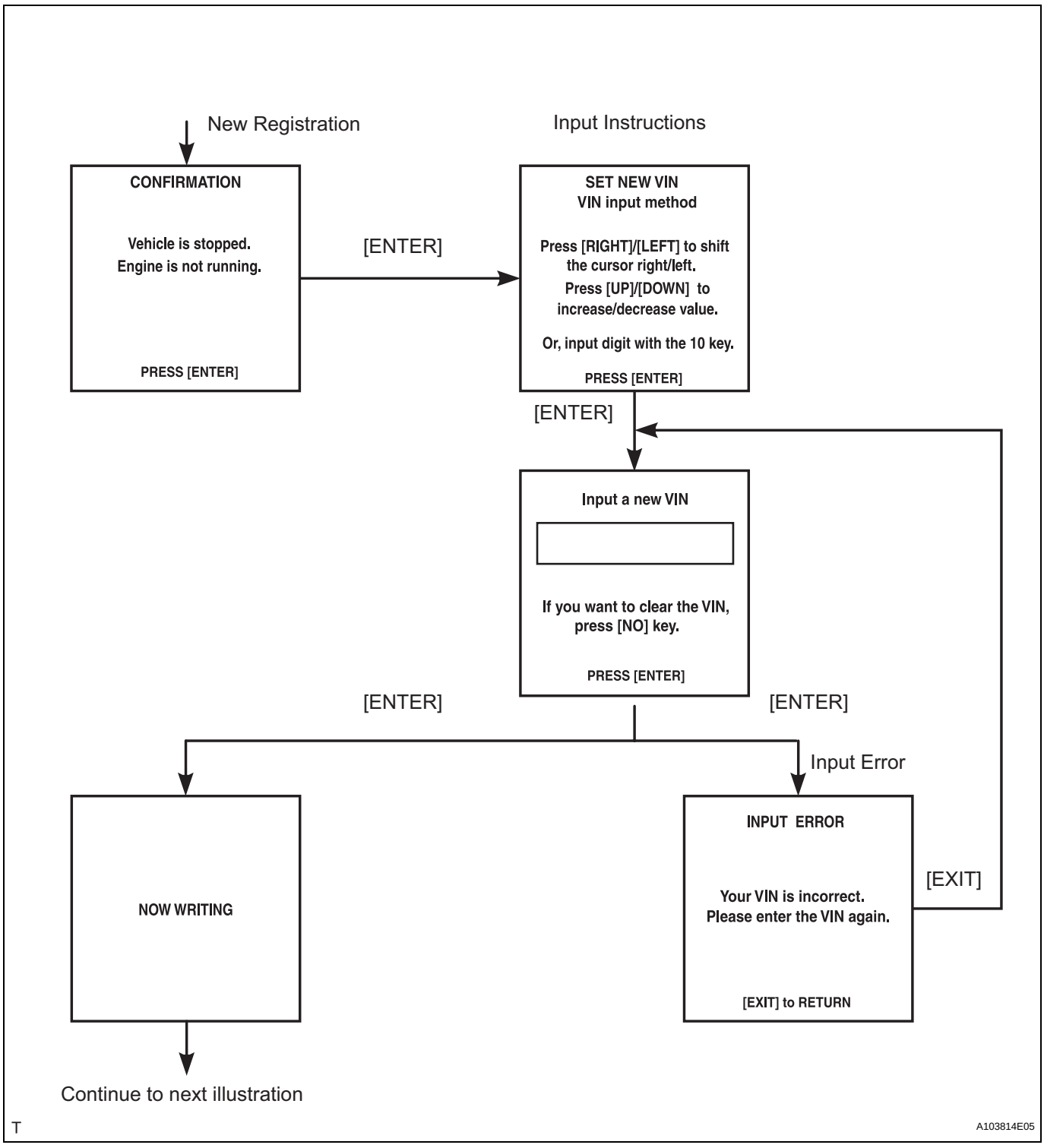
New Registration
Input Instructions
CONFIRMATION
Vehicle is stopped.
Engine is not running.
PRESS [ENTER]
[ENTER]
SET NEW VIN
VIN input method
Press [RIGHT]/[LEFT] to shift the cursor right/left.
Press [UP]/[DOWN] to increase/decrease value.
Or, input digit with the 10 key.
PRESS [ENTER]
[ENTER]
Input a new VIN
If you want to clear the VIN, press [NO] key.
PRESS [ENTER]
[ENTER]
[ENTER]
Input Error
NOW WRITING
INPUT ERROR
Your VIN is incorrect.
Please enter the VIN again.
[EXIT] to RETURN
[EXIT]
Continue to next illustration
T
A103814E05

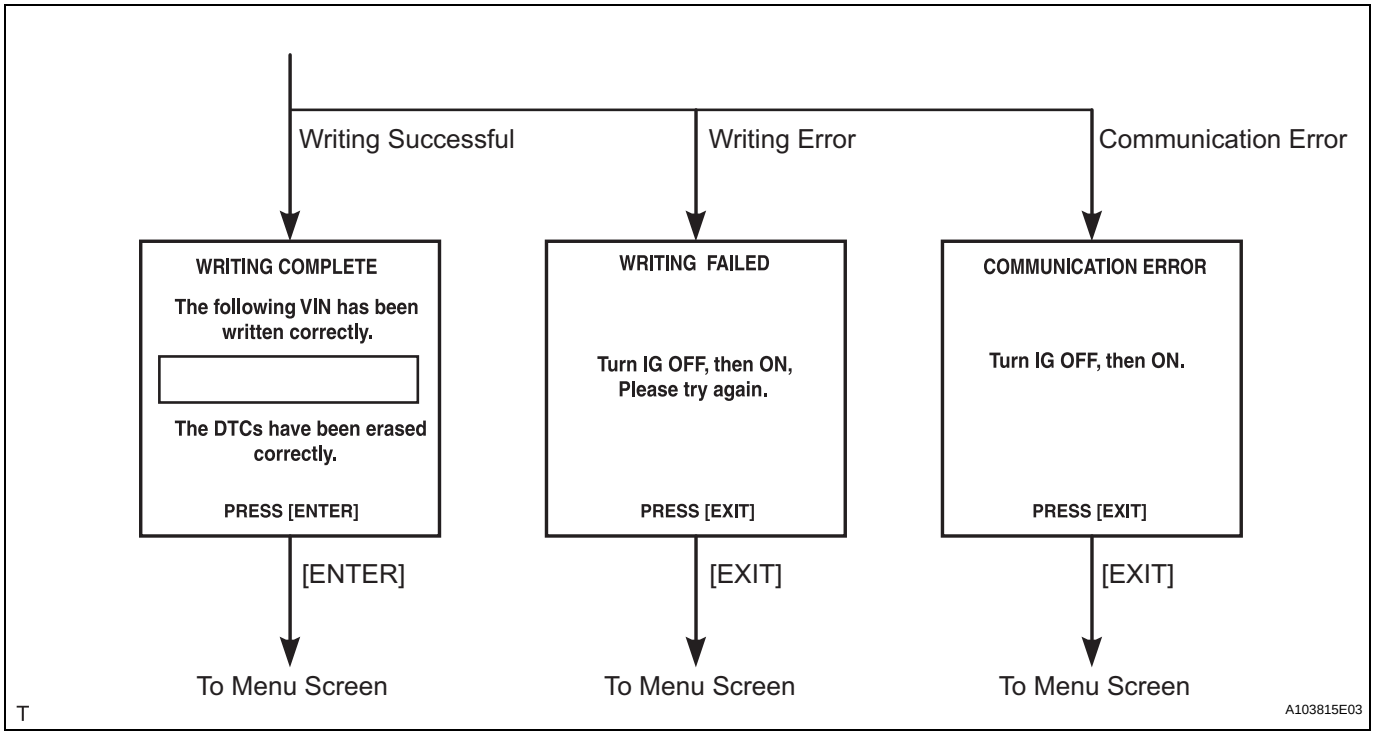
Writing Successful
Writing Error
Communication Error
WRITING COMPLETE
The following VIN has been written correctly.
The DTCs have been erased correctly.
PRESS [ENTER]
WRITING FAILED
Turn IG OFF, then ON, Please try again.
PRESS [EXIT]
COMMUNICATION ERROR
Turn IG OFF, then ON.
PRESS [EXIT]
[ENTER]
[EXIT]
[EXIT]
To Menu Screen
To Menu Screen
To Menu Screen
T
A103815E03

ES

CHECKING MONITOR STATUS

The purpose of the monitor result (mode 06) is to allow access to the results for on-board diagnostic monitoring tests of specific components/systems that are not continuously monitored. Examples are catalyst, evaporative emission (EVAP) and thermostat.

The monitor result allows the OBD II scan tool to display the monitor status, test value, minimum test limit and maximum test limit. These data are displayed after the vehicle has been driven to run the monitor.

When the test value is not between the minimum test limit and maximum test limit, the ECM (PCM) interprets this as a malfunction. When the component is not malfunctioning, if the difference of the test value and test limit is very small, the component will malfunction in the near future.

Perform the following instruction to view the monitor status. Although this instruction reference the Lexus/Toyota diagnostic tester, it can be checked using a generic OBD II scan tool. Refer to your scan tool operator's manual for specific procedures.

1. PERFORM MONITOR DRIVE PATTERN

(a) Connect an intelligent tester to the DLC3.

(b) Turn the ignition switch ON and the tester ON.

(c) Clear DTCs (See page ES-38).

(d) Run the vehicle in accordance with the applicable drive pattern described in READINESS MONITOR DRIVE PATTERN (See page ES-23). Do not turn the ignition switch OFF.

NOTICE:

The test results will be lost if the ignition switch is turned OFF.

2. ACCESS MONITOR RESULT

(a) Select from the intelligent tester menus: DIAGNOSIS, ENHANCED OBD II, MONITOR INFO and MONITOR RESULT. The monitor status appears after the component name.

- INCMP: The component has not been monitored yet.
- PASS: The component is functioning normally.
- FAIL: The component is malfunctioning.

(b) Confirm that the component is either PASS or FAIL.

(c) Select the component and press ENTER. The accuracy test value appears if the monitor status is either PASS or FAIL.

3. CHECK COMPONENT STATUS

(a) Compare the test value with the minimum test limit (MIN LIMIT) and maximum test limit (MAX LIMIT).

(b) If the test value is between the minimum test limit and maximum test limit, the component is functioning normally. If not, the component is malfunctioning. The test value is usually significantly higher or lower than the test limit. If the test value is on the borderline of the test limit, the component will malfunction in the near future.
HINT:
The monitor result might on rare occasions be PASS even if the malfunction indicator lamp (MIL) is illuminated. This indicates the system malfunctioned on a previous driving cycle. This might be caused by an intermittent problem.

4. MONITOR RESULT INFORMATION

If you use a generic scan tool, multiply the value by the scaling value listed below.

A/F Sensor Bank 1 Sensor 1

Monitor ID	Test ID	Scaling	Unit	Description
$01	$8E	Multiply by 0.001	V	A/F sensor deterioration level
$01	$91	Multiply by 0.004	mA	A/F sensor current

A/F Sensor Bank 2 Sensor 1

Monitor ID	Test ID	Scaling	Unit	Description
$05	$8E	Multiply by 0.001	V	A/F sensor deterioration level
$05	$91	Multiply by 0.004	mA	A/F sensor current

HO2 Sensor Bank 1 Sensor 2

Monitor ID	Test ID	Scaling	Unit	Description
$02	$07	Multiply by 0.001	V	Minimum sensor voltage
$02	$08	Multiply by 0.001	V	Maximum sensor voltage
$02	$8F	Multiply by 0.0003	g	Maximum oxygen storage capacity

HO2 Sensor Bank 2 Sensor 2

Monitor ID	Test ID	Scaling	Unit	Description
$06	$07	Multiply by 0.001	V	Minimum sensor voltage
$06	$08	Multiply by 0.001	V	Maximum sensor voltage
$06	$8F	Multiply by 0.0003	g	Maximum oxygen storage capacity

Catalyst - Bank 1

Monitor ID	Test ID	Scaling	Unit	Description
$21	$A9	Multiply by 0.0003	No dimension	Oxygen storage capacity of catalyst - Bank 1

Catalyst - Bank 2

Monitor ID	Test ID	Scaling	Unit	Description
$22	$A9	Multiply by 0.0003	No dimension	Oxygen storage capacity of catalyst - Bank 2

EVAP

Monitor ID	Test ID	Scaling	Unit	Description
$3D	$C9	Multiply by 0.001	kPa	Test value for small leak (P0456)
$3D	$CA	Multiply by 0.001	kPa	Test value for gross leak (P0455)
$3D	$CB	Multiply by 0.001	kPa	Test value for leak detection pump OFF stuck (P2401)
$3D	$CD	Multiply by 0.001	kPa	Test value for leak detection pump ON stuck (P2402)
$3D	$CE	Multiply by 0.001	kPa	Test value for vent valve OFF stuck (P2420)

Monitor ID	Test ID	Scaling	Unit	Description
$3D	$CF	Multiply by 0.001	kPa	Test value for vent valve ON stuck (P2419)
$3D	$D0	Multiply by 0.001	kPa	Test value for reference orifice low flow (P043E)
$3D	$D1	Multiply by 0.001	kPa	Test value for reference orifice high flow (P043F)
$3D	$D4	Multiply by 0.001	kPa	Test value for purge VSV close stuck (P0441)
$3D	$D5	Multiply by 0.001	kPa	Test value for purge VSV open stuck (P0441)
$3D	$D7	Multiply by 0.001	kPa	Test value for purge flow insufficient (P0441)

Rear Oxygen Sensor Heater

Monitor ID	Test ID	Scaling	Unit	Description
$42	$91	Multiply by 0.001	Ohm	Oxygen sensor heater resistance bank 1 sensor 2
$46	$91	Multiply by 0.001	Ohm	Oxygen sensor heater resistance bank 2 sensor 2

ES

Misfire

Monitor ID	Test ID	Scaling	Unit	Description
$A1	$0B	Multiply by 1	Time	Exponential Weighted Moving Average (EWMA) misfire for all cylinders: Misfire counts for last 10 driving cycles - Total
$A1	$0C	Multiply by 1	Time	Misfire rate for all cylinders: Misfire counts for last/current driving cycles - Total
$A2	$0B	Multiply by 1	Time	EWMA misfire for cylinder 1: Misfire counts for last 10 driving cycles - Total
$A2	$0C	Multiply by 1	Time	Misfire rate for cylinder 1: Misfire counts for last/current driving cycles - Total
$A3	$0B	Multiply by 1	Time	EWMA misfire for cylinder 2: Misfire counts for last 10 driving cycles - Total
$A3	$0C	Multiply by 1	Time	Misfire rate for cylinder 2: Misfire counts for last/current driving cycles - Total
$A4	$0B	Multiply by 1	Time	EWMA misfire for cylinder 3: Misfire counts for last 10 driving cycles - Total
$A4	$0C	Multiply by 1	Time	Misfire rate for cylinder 3: Misfire counts for last/current driving cycles - Total
$A5	$0B	Multiply by 1	Time	EWMA misfire for cylinder 4: Misfire counts for last 10 driving cycles - Total
$A5	$0C	Multiply by 1	Time	Misfire rate for cylinder 4: Misfire counts for last/current driving cycles - Total
$A6	$0B	Multiply by 1	Time	EWMA misfire for cylinder 5: Misfire counts for last 10 driving cycles - Total
$A6	$0C	Multiply by 1	Time	Misfire rate for cylinder 5: Misfire counts for last/current driving cycles - Total
$A7	$0B	Multiply by 1	Time	EWMA misfire for cylinder 6: Misfire counts for last 10 driving cycles - Total
$A7	$0C	Multiply by 1	Time	Misfire rate for cylinder 6: Misfire counts for last/current driving cycles - Total

READINESS MONITOR DRIVE PATTERN

PURPOSE OF READINESS TESTS

- The On-Board Diagnostic (OBD II) system is designed to monitor the performance of emission related components, and indicate any detected abnormalities with DTCs (Diagnostic Trouble Codes). Since various components need to be monitored during different driving conditions, the OBD II system is designed to run separate monitoring programs called Readiness Monitors.
- The intelligent tester's software must be version 9.0 or newer to view the Readiness Monitor Status. To view the status, select the following menu items: DIAGNOSIS / ENHANCED OBD II / MONITOR INFO / MONITOR STATUS.
- When the Readiness Monitor Status reads COMPL (complete), the necessary conditions have been met for running the performance tests for that Readiness Monitor.
- A generic OBD II scan tool can also be used to view the Readiness Monitor Status.

HINT:
Many state Inspection and Maintenance (I/M) programs require a vehicle's Readiness Monitor Status to show COMPL before beginning emission tests.
The Readiness Monitor will be reset to INCMPL (incomplete) if:

- The ECM has lost battery power or blown a fuse.
- DTCs have been cleared.
- The conditions for running the Readiness Monitor have not been met.

If the Readiness Monitor Status shows INCMPL, follow the appropriate Readiness Monitor Drive Pattern to change the status to COMPL.

CAUTION:
Strictly observe posted speed limits, traffic laws, and road conditions when performing these drive patterns.
NOTICE:
These drive patterns represent the fastest method of satisfying all conditions necessary to achieve complete status for each specific Readiness Monitor.
In the event of a drive pattern being interrupted (possibly due to factors such as traffic conditions), the drive pattern can be resumed. In most cases, the Readiness Monitor will still achieve complete status upon completion of the drive pattern.
To ensure completion of the Readiness Monitors, avoid sudden changes in vehicle load and speed (driving up and down hills and/or sudden acceleration).

Contents

Steps	Section Titles
1	Catalyst Monitor (Active Air-Fuel Ratio Control Type)

Steps	Section Titles
2	EVAP System Monitor (Key-Off Type)
3	Air-Fuel Ratio (A/F) and Heated Oxygen (HO2) Sensor Monitors (Active Air-Fuel Ratio Control Type)
4	Air-Fuel Ratio (A/F) and Heated Oxygen (HO2) Sensor Heater Monitors (Front A/F and Rear HO2 Sensor Type)

1. CATALYST MONITOR (ACTIVE AIR-FUEL RATIO CONTROL TYPE)

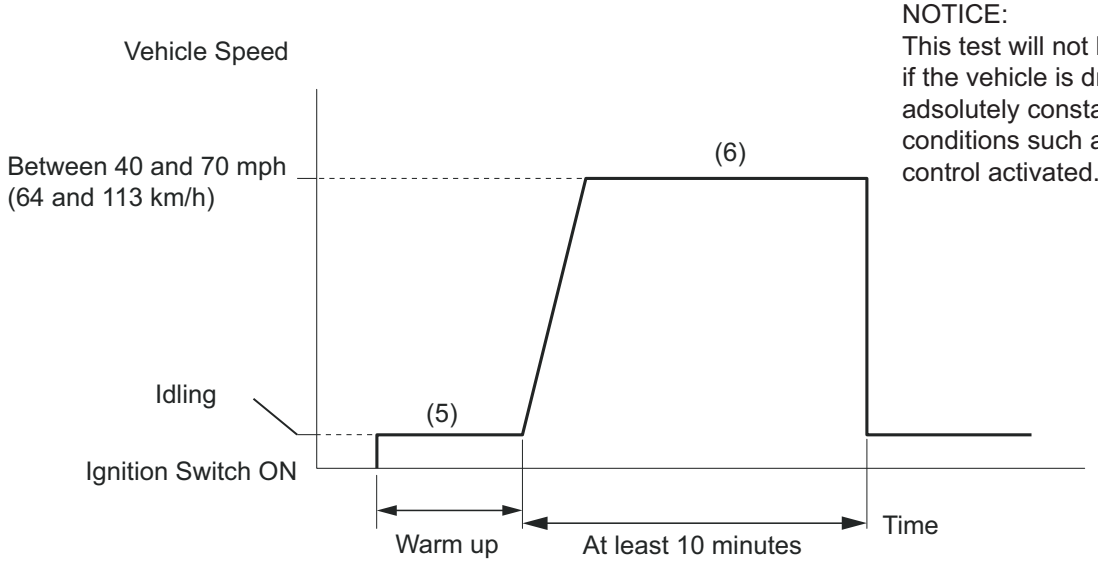

(a) Preconditions
The monitor will not run unless:
- The MIL is OFF

(b) Drive Pattern
(1) Connect an intelligent tester or OBD II scan tool to the DLC3.
(2) Turn the ignition switch ON.
(3) Turn the tester or scan tool ON.
(4) Clear DTCs (where set) (See page ES-38).
(5) Start the engine and warm it up.
(6) Drive the vehicle at between 40 mph and 70 mph (64 km/h and 113 km/h) for at least 10 minutes.

(c) Monitor Status
(1) Check the Readiness Monitor Status displayed on the tester or scan tool.
(2) If the status does not switch to COMPL (complete), extend the driving time.

2. EVAP SYSTEM MONITOR (KEY-OFF TYPE)

(a) Preconditions
The monitor will not run unless:
- The fuel tank is less than 90 % full.
- The altitude is less than 8,000 ft (2,450 m).

- The vehicle is at stationary.
- The engine coolant temperature is between 4.4°C and 35°C (40°F and 95°F).
- The intake air temperature is between 4.4°C and 35°C (40°F and 95°F).
- Vehicle was driven in the city area (or on free-way) for 10 minutes or more.

(b) Monitor Conditions

(1) Turn the ignition switch OFF and wait for 6 hours.

HINT:

Do not start the engine until checking Readiness Monitor Status. If the engine is started, the step described above must be repeated.

(c) Monitor Status

(1) Connect an intelligent tester to the DLC3.

(2) Turn the ignition switch ON.

(3) Turn the tester or scan tool ON.

(4) Check the Readiness Monitor Status displayed on the tester or scan tool.

If the status does not switch to COMPL (complete), restart the engine, make sure that the preconditions have been met, and then perform the Monitor Conditions again.

3. AIR-FUEL RATIO (A/F) AND HEATED OXYGEN (HO2) SENSOR MONITORS (ACTIVE AIR-FUEL RATIO CONTROL TYPE)

(a) Preconditions

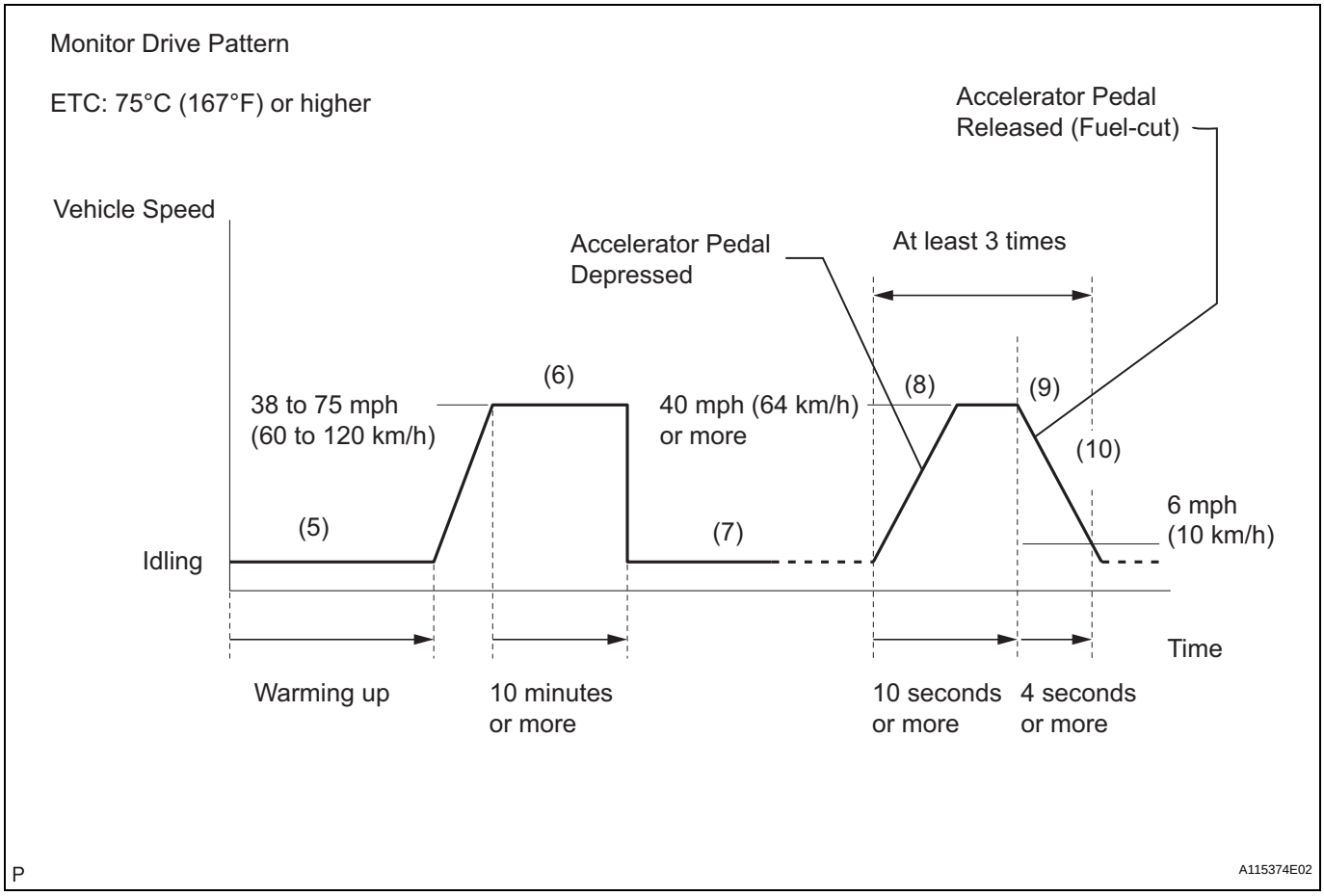

The monitor will not run unless:

- 2 minutes or more have elapsed since the engine was started.
- The Engine Coolant Temperature (ECT) is 75°C (167°F) or more.
- Cumulative driving time at a vehicle speed of 30 mph (48 km/h) or more exceeds 6 minutes.
- Air-fuel ratio feedback control is performed.
- Fuel-cut control is performed for 8 seconds or more (for the Rear HO2 Sensor Monitor)

(b) Drive Pattern for front A/F sensor and HO2 sensor

(1) Connect an intelligent tester to the DLC3.
(2) Turn the ignition switch ON.
(3) Turn the tester ON.
(4) Clear DTCs (See page ES-38).
(5) Start the engine, and warm it up until the ECT reaches 75°C (167°F) or higher.
(6) Drive the vehicle at 38 mph (60 km/h) or more for at least 10 minutes.
(7) Change the transmission to 2nd gear.
(8) Accelerate the vehicle to 40 mph (64 km/h) or more by depressing the accelerator pedal for at least 10 seconds.

(9) Soon after performing step (8) above, release the accelerator pedal for at least 4 seconds without depressing the brake pedal, in order to execute fuel-cut control.
(10) Allow the vehicle to decelerate until the vehicle speed declines to less than 6 mph (10 km/h).
(11) Repeat steps from (8) through (10) above at least 3 times in one driving cycle.

(c) Monitor Status
(1) Check the Readiness Monitor Status displayed on the tester.
(2) If the status does not switch to COMPL (complete), make sure that the preconditions have been met, and then perform steps from (5) through (11) in Drive Pattern above.

4. AIR-FUEL RATIO (A/F) AND HEATED OXYGEN (HO2) SENSOR HEATER MONITORS (FRONT A/F AND REAR HO2 SENSOR TYPE)

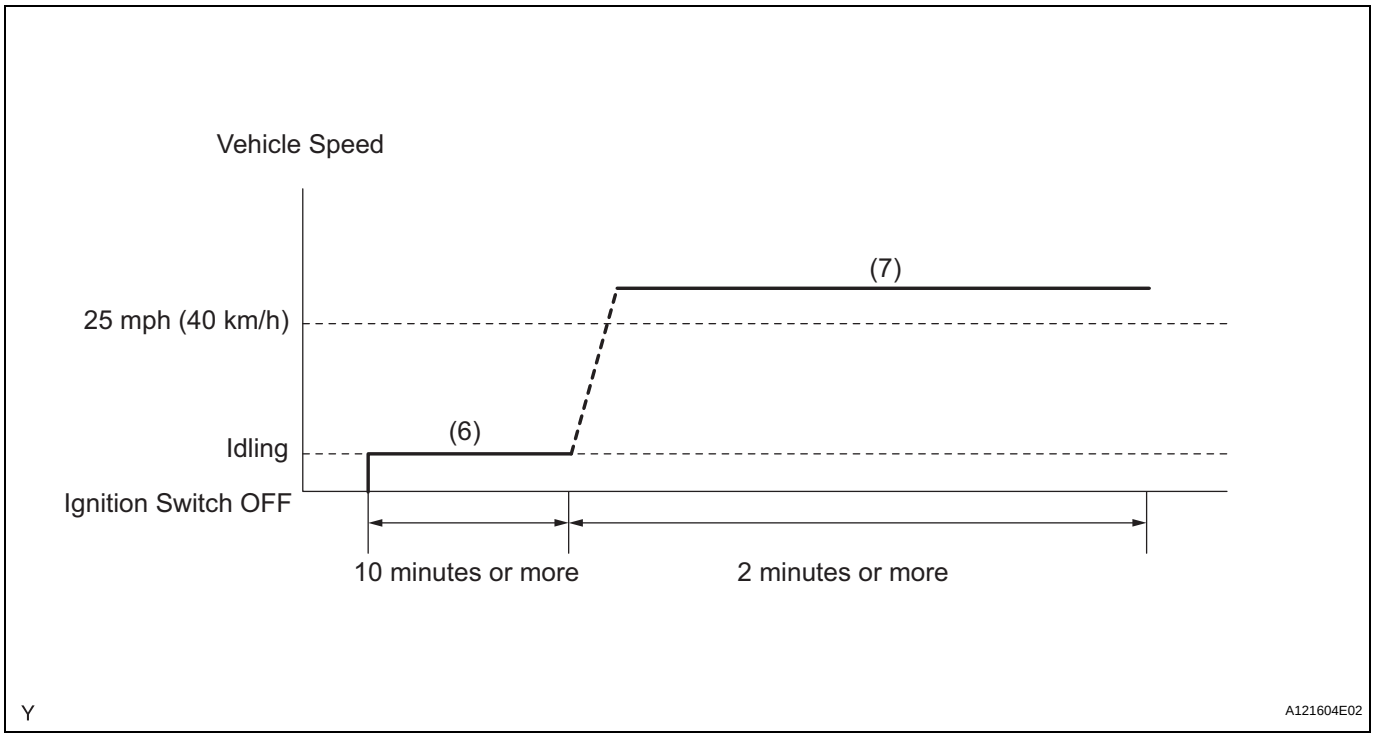

(a) Preconditions
The monitor will not run unless:
- The MIL is OFF

(b) Drive Pattern
(1) Connect an intelligent tester to the DLC3.
(2) Turn the ignition switch ON.
(3) Turn the tester or scan tool ON.
(4) Clear DTCs (See page ES-38).
(5) Start the engine.
(6) Allow the engine to idle for 10 minutes or more.
(7) Drive the vehicle at 25 mph (40 km/h) or more for at least 2 minutes.

(c) Monitor Status
(1) Check the Readiness Monitor Status displayed on the tester or scan tool.
If the status does not switch to COMPL (complete), make sure that the preconditions have been met, and repeat steps through (5) to (7) described in the Drive Pattern above.

PROBLEM SYMPTOMS TABLE

HINT:
When a malfunction is not confirmed by a DTC (Diagnostic Trouble Code) check and the cause of problem cannot be identified through a basic inspection, troubleshoot according to the priority order indicated in the table below.

Symptom	Suspected area	See page
Engine does not crank (Does not start)	1. Immobilizer System	-
	2. Starter	ST-9
	3. STARTER relay	ST-17
No initial combustion (Does not start)	1. ECM power source circuit	ES-384
	2. Fuel pump control circuit	ES-394
	3. VC output circuit	ES-389
	4. ECM	ES-29
Engine cranks normally but difficult to start	1. Fuel pump control circuit	ES-394
	2. Compression	EM-3
Difficult to start with cold engine	1. Starter signal circuit	ES-267
	2. Fuel pump control circuit	ES-394
	3. Spark plug	IG-5
	4. Ignition system	ES-199
	5. Injector	FU-14
Difficult to start with warm engine	1. Starter signal circuit	ES-267
	2. Fuel pump control circuit	ES-394
	3. Spark plug	IG-5
	4. Ignition system	ES-199
	5. Injector	FU-14
High engine idling speed (Poor idling)	1. A/C signal circuit	AC-8
	2. ECM power source circuit	ES-384
	3. Electronic throttle control system	ES-428
	4. Air induction system	-
	5. PCV hose	-
Low engine idling speed (Poor idling)	1. A/C signal circuit	AC-8
	2. Fuel pump control circuit	ES-394
	3. Electronic throttle control system	ES-428
	4. Air induction system	-
	5. PCV hose	-
Rough idling (Poor idling)	1. Compression	EM-3
	2. Fuel pump control circuit	ES-394
	3. Electronic throttle control system	ES-428
	4. Air induction system	-
	5. PCV hose	-
Hunting (Poor idling)	1. ECM power source circuit	ES-384
	2. Fuel pump control circuit	ES-394
	3. Spark plug	IG-5
	4. Ignition system	ES-199
	5. Injector	FU-14
	6. Electronic throttle control system	ES-428
	7. Air induction system	-
	8. PCV hose	-

Symptom	Suspected area	See page
Hesitation/ Poor acceleration (Poor driveability)	1. Fuel pump control circuit	ES-394
	2. A/T faulty* (A750E)	AT-22
	3. A/T faulty* (A750F)	AT-23
	4. Spark plug	IG-5
	5. Ignition system	ES-199
	6. Injector	FU-14
Surging (Poor driveability)	1. Fuel pump control circuit	ES-394
	2. Spark plug	IG-5
	3. Ignition system	ES-199
	4. Injector	FU-14
Engine stalls soon after starting	1. Fuel pump control circuit	ES-394
	2. Spark plug	IG-5
	3. Ignition system	ES-199
	4. Injector	FU-14
Engine stalls during A/C operation	1. A/C signal circuit	AC-8
	2. ECM	ES-29
Unable/difficult to refuel	Refueling valve (canister)	-

TERMINALS OF ECM

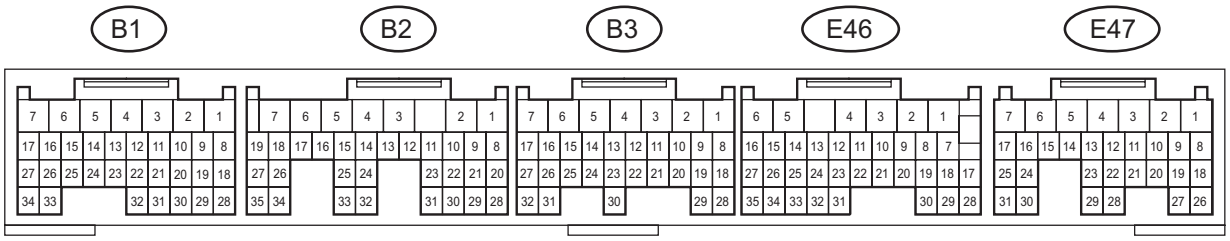

Y

A121603E03

HINT:
The standard normal voltage between each pair of ECM terminals is shown in the table below. The appropriate conditions for checking each pair of terminals are also indicated.
The result of checks should be compared with the standard normal voltage for that pair of terminals, displayed in the STD Voltages column.
The illustration above can be used as a reference to identify the ECM terminal locations.

Symbols (Terminal No.)	Wiring Colors	Terminal Descriptions	Conditions	STD Voltages
BATT (E47-3) - E1 (B3-1)	L - BR	Battery (for measuring the battery voltage and for the ECM memory)	Always	11 to 14 V
+BM (E47-7) - E1 (B3-1)	GR - BR	Power source of throttle motor	Always	11 to 14 V
IGSW (E47-9) - E1 (B3-1)	B-O - BR	Ignition switch	Ignition switch ON	11 to 14 V
+B (E47-1) - E1 (B3-1)	B - BR	Power source of ECM	Ignition switch ON	11 to 14 V
+B2 (E47-2) - E1 (B3-1)	B - BR	Power source of ECM	Ignition switch ON	11 to 14 V
OC1+ (B3-17) - OC1- (B3-16)	G-Y - L-B	Camshaft timing oil control valve (OCV)	Ignition switch ON	Pulse generation (see waveform 1)
OC2+ (B3-15) - OC2- (B3-14)	L-W - L-R	Camshaft timing oil control valve (OCV)	Ignition switch ON	Pulse generation (see waveform 1)
MREL (E47-8) - E1 (B3-1)	W-G - BR	EFI relay	Ignition switch ON	11 to 14 V
VC (B1-23) - E2 (B1-28)	L-R - W-G	Power source of sensor (specific voltage)	Ignition switch ON	4.5 to 5.5 V
VG (B1-30) - E2G (B1-29)	R - R-W	Mass air flow meter	Idling, Shift lever position P or N, A/C switch OFF	0.5 to 3.0 V
THA (B1-22) - E2 (B1-28)	R-B - W-G	Intake air temperature sensor	Idling, Intake air temperature 20°C (68°F)	0.5 to 3.4 V
THW (B1-21) - E2 (B1-28)	B - W-G	Engine coolant temperature sensor	Idling, Engine coolant temperature 80°C (176°F)	0.2 to 1.0 V
VTA1 (B1-20) - E2 (B1-28)	G-B - W-G	Throttle position sensor (for engine control)	Ignition switch ON, Throttle valve fully closed	0.5 to 1.2 V
			Ignition switch ON, Throttle valve fully open	3.2 to 4.8 V

Symbols (Terminal No.)	Wiring Colors	Terminal Descriptions	Conditions	STD Voltages
VTA2 (B1-19) - E2 (B1-28)	G-W - W-G	Throttle position sensor (for sensor malfunction detection)	Ignition switch ON, Throttle valve fully closed	2.1 to 3.1 V
			Ignition switch ON, Throttle valve fully open	4.5 to 5.0 V
VPA (E47-18) - EPA (E47-20)	W-R - LG-B	Accelerator pedal position sensor (for engine control)	Ignition switch ON, Accelerator pedal fully released	0.5 to 1.1 V
			Ignition switch ON, Accelerator pedal fully depressed	2.6 to 4.5 V
VPA2 (E47-19) - EPA2 (E47-21)	R-B - V-W	Accelerator pedal position sensor (for sensor malfunction detection)	Ignition switch ON, Accelerator pedal fully released	1.2 to 2.0 V
			Ignition switch ON, Accelerator pedal fully depressed	3.4 to 5.0 V
VCPA (E47-26) - EPA (E47-20)	B-Y - LG-B	Power source of accelerator pedal position sensor (for VPA)	Ignition switch ON	4.5 to 5.5 V
VCP2 (E47-27) - EPA2 (E47-21)	W-L - V-W	Power source of accelerator pedal position sensor (for VPA2)	Ignition switch ON	4.5 to 5.5 V
HA1A (B2-2) - E04 (B2-7) HA2A (B2-1) - E05 (B2-6)	R-L - W-B B-W - W-B	A/F sensor heater	Idling	Below 3.0 V
			Ignition switch ON	11 to 14 V
A1A+ (B2-22) - E1 (B3-1)	P - BR	A/F sensor	Ignition switch ON	3.3 V*1
A2A+ (B2-23) - E1 (B3-1)	Y - BR	A/F sensor	Ignition switch ON	3.3 V*1
A1A- (B2-30) - E1 (B3-1)	L - BR	A/F sensor	Ignition switch ON	2.9 V*1
A2A- (B2-31) - E1 (B3-1)	BR - BR	A/F sensor	Ignition switch ON	2.9 V*1
HT1B (B1-1) - E1 (B3-1) HT2B (B2-5) - E1 (B3-1)	G - BR L - BR	Heated oxygen sensor heater	Idling	Below 3.0 V
			Ignition switch ON	11 to 14 V
OX1B (B1-18) - E2 (B1-28) OX2B (B2-33) - E2 (B1-28)	W - W-G B - W-G	Heated oxygen sensor	Maintain engine speed at 2,500 rpm for 2 minutes after warming up	Pulse generation (see waveform 2)
#10 (B3-2) - E01 (B1-7) #20 (B3-3) - E01 (B1-7) #30 (B3-4) - E01 (B1-7) #40 (B3-5) - E01 (B1-7) #50 (B3-6) - E01 (B1-7) #60 (B3-7) - E01 (B1-7)	R-L - BR G - BR R - BR W - BR Y - BR L - BR	Injector	Ignition switch ON	11 to 14 V
			Idling	Pulse generation (see waveform 3)
KNK1 (B2-29) - EKNK (B2-28)	B - W	Knock sensor	Maintain engine speed at 4,000 rpm after warming up	Pulse generation (see waveform 4)
KNK2 (B2-21) - EKN2 (B2-20)	G - R	Knock sensor	Maintain engine speed at 4,000 rpm after warming up	Pulse generation (see waveform 4)
VV1+ (B3-19) - VV1- (B3-29)	R - G	Variable valve timing (VVT) sensor	Idling	Pulse generation (see waveform 5)
VV2+ (B3-18) - VV2- (B3-28)	Y - L	Variable valve timing (VVT) sensor	Idling	Pulse generation (see waveform 5)
NE+ (B3-21) - NE- (B3-20)	B - W	Crankshaft position sensor	Idling	Pulse generation (see waveform 5)
IGT1 (B1-8) - E1 (B3-1) IGT2 (B1-9) - E1 (B3-1) IGT3 (B1-10) - E1 (B3-1) IGT4 (B1-11) - E1 (B3-1) IGT5 (B1-12) - E1 (B3-1) IGT6 (B1-13) - E1 (B3-1)	Y-R - BR G - BR B-W - BR Y-G - BR GR - BR L - BR	Ignition coil with igniter (ignition signal)	Idling	Pulse generation (see waveform 6)

Symbols (Terminal No.)	Wiring Colors	Terminal Descriptions	Conditions	STD Voltages
IGF1 (B1-24) - E1 (B3-1)	W-R - BR	Ignition coil with igniter (ignition confirmation signal)	Ignition switch ON	4.5 to 5.5 V
			Idling	Pulse generation (see waveform 6)
PRG (B1-34) - E01 (B1-7)	G-Y - BR	Purge VSV	Ignition switch ON	11 to 14 V
			Idling	Pulse generation (see waveform 7)
SPD (E46-8) - E1 (B3-1)	V-R - BR	Speed signal from combination meter	Ignition switch ON, Rotate driving wheel slowly	Pulse generation (see waveform 8)
STA (B3-11) - E1 (B3-1)	B-Y - BR	Starter signal	Cranking	11 to 14 V
STP (E47-15) - E1 (B3-1)	G-Y - BR	Stop light switch	Brake pedal depressed	7.5 to 14 V
			Brake pedal released	Below 1.5 V
ST1- (E47-16) - E1 (B3-1)	R-L - BR	Stop light switch (opposite to STP terminal)	Ignition switch ON, Brake pedal depressed	Below 1.5 V
			Ignition switch ON, Brake pedal released	7.5 to 14 V
NSW (B2-8) - E1 (B3-1)	L-Y - BR	Park/Neutral position switch	Ignition switch ON, Shift lever position in P or N	Below 3.0 V
			Ignition switch ON, Shift lever position other than P and N	11 to 14 V
M+ (B1-5) - ME01 (B2-3)	P - W-B	Throttle motor	Idling with warm engine	Pulse generation (see waveform 9)
M- (B1-4) - ME01 (B2-3)	L - W-B	Throttle motor	Idling with warm engine	Pulse generation (see waveform 10)
FC (E47-10) - E1 (B3-1)	GR-B - BR	Fuel pump control	Ignition switch ON	11 to 14 V
FPR (B3-30) - E1 (B3-1)	Y-B - BR	Fuel pump control	Ignition switch ON	11 to 14 V
W (E46-30) - E1 (B3-1)	R-B - BR	MIL	Ignition switch ON	Below 3.0 V
			Idling	11 to 14 V
ELS (E46-13) - E1 (B3-1)	Y-B - BR	Electric load	Defogger or taillight switch OFF	0 to 1.5 V
			Defogger or taillight switch ON	7.5 to 14 V
ELS2 (E46-12) - E1 (B3-1)	Y-G - BR	Electric load	Voltage inverter OFF	0 to 1.5 V
			Voltage inverter ON	7.5 to 14 V
TC (E47-23) - E1 (B3-1)	P-L - BR	Terminal TC of DLC 3	Ignition switch ON	11 to 14 V
TACH (E46-1) - E1 (B3-1)	B-W - BR	Engine speed	Idling	Pulse generation (see waveform 11)
ACIS (B1-33) - E1 (B3-1)	W-L - BR	VSV for ACIS	Ignition switch ON	11 to 14 V
PSW (B3-10) - E1 (B3-1)	G-W - BR	P/S pressure switch	Ignition switch ON	11 to 14 V
VPMP (E47-5) - E1 (B3-1)	R-G - BR	Vent valve (built into canister pump module)	Ignition switch ON	11 to 14 V
MPMP (E47-6) - E1 (B3-1)	O - BR	Leak detection pump (built into canister pump module)	Leak detection pump OFF	0 to 3 V
			Leak detection pump ON	11 to 14 V
PPMP (E47-22) - E2 (B1-28)	R - W-G	Canister pressure sensor (built into canister pump module)	Ignition switch ON	3 to 3.6 V
F/PS (E46-32) - E1 (B3-1)	L - BR	Airbag sensor assembly	Idling with warm engine	Pulse generation (see waveform 12)
CANH (E46-33) - E1 (B3-1)	W - BR	CAN communication line	Ignition switch ON	Pulse generation (see waveform 13)
CANL (E46-34) - E1 (B3-1)	R - BR	CAN communication line	Ignition switch ON	Pulse generation (see waveform 14)

ES

*1: The ECM terminal voltage is constant regardless of the output voltage from the sensor.

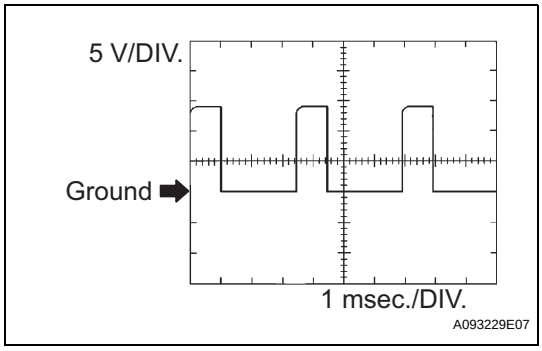

1. WAVEFORM 1
Camshaft timing oil control valve (OCV)

ECM Terminal Names	Between OC1+ and OC1- or OC2+ and OC2-
Tester Ranges	5 V/DIV, 1 msec./DIV
Conditions	Idling

HINT:
The wavelength becomes shorter as the engine rpm increases.

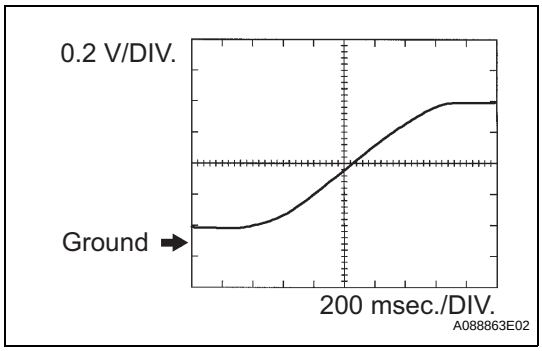

2. WAVEFORM 2
Heated oxygen sensor

ECM Terminal Names	Between OX1B and E2 or OX2B and E2
Tester Ranges	0.2 V/DIV, 200 msec./DIV
Conditions	Engine speed maintained at 2,500 rpm for 2 minutes after warming up sensor

HINT:
In the DATA LIST, item O2S B1S2 or O2S B2S2 shows the ECM input values from the heated oxygen sensor.

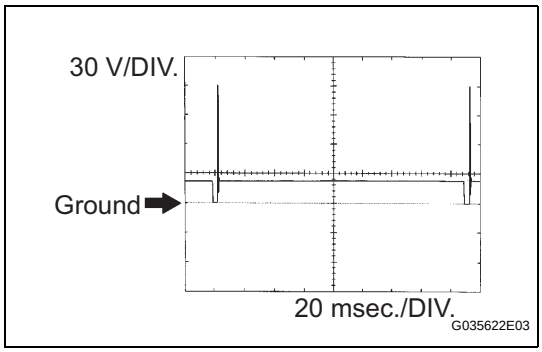

3. WAVEFORM 3
Fuel injector

ECM Terminal Names	Between #10 (to 60) and E01
Tester Ranges	30 V/DIV, 20 msec./DIV
Conditions	Idling

HINT:
The wavelength becomes shorter as the engine rpm increases.

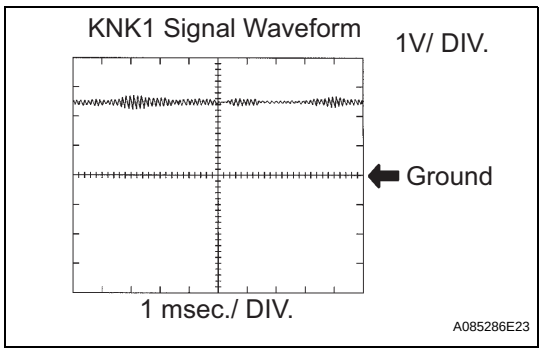

4. WAVEFORM 4
Knock sensor

ECM Terminal Names	Between KNK1 and EKNK or KNK2 and EKN2
Tester Ranges	1 V/DIV, 0.01 to 1 msec./DIV
Conditions	Engine speed maintained at 4,000 rpm after warming up engine

HINT:
- The wavelength becomes shorter as the engine rpm increases.
- The waveforms and amplitudes displayed on the tester differ slightly depending on the vehicle.

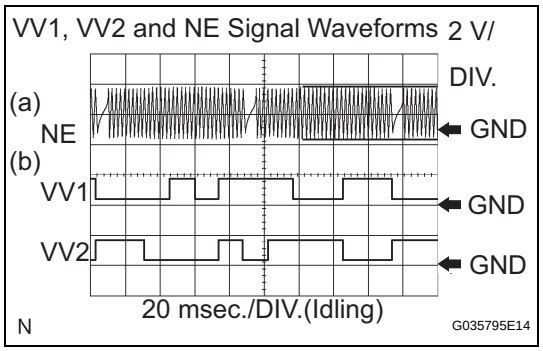

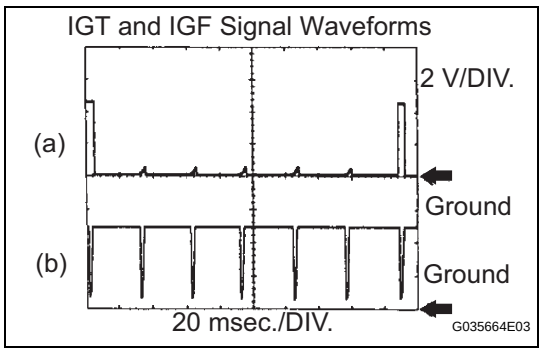

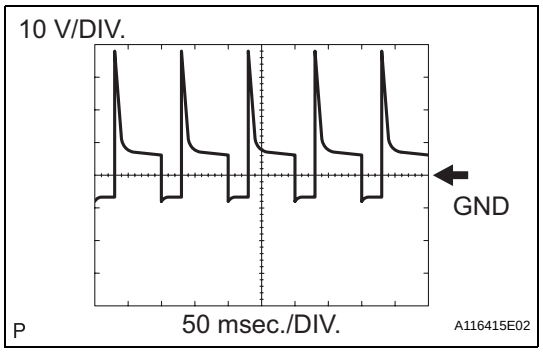

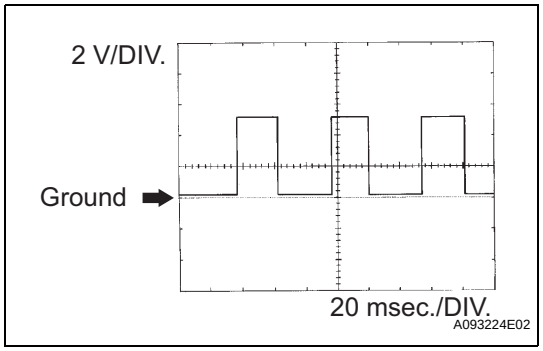

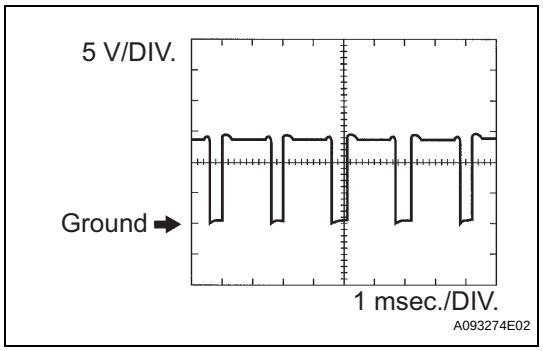

5. WAVEFORM 5

(a) VVT sensor

(b) Crankshaft position sensor

ECM Terminal Names	(a) Between NE+ and NE- (b) Between VV1+ and VV1- or VV2+ and VV2-
Tester Ranges	2 V/DIV, 20 msec./DIV
Conditions	Idling

HINT:

The wavelength becomes shorter as the engine rpm increases.

6. WAVEFORM 6

(a) Igniter IGT signal (from ECM to igniter)

(b) Igniter IGF signal (from igniter to ECM)

ECM Terminal Names	(a) Between IGT (1 to 6) and E1 (b) Between IGF1 and E1
Tester Ranges 2	2 V/DIV, 20 msec./DIV
Conditions	Idling

HINT:

The wavelength becomes shorter as the engine rpm increases.

7. WAVEFORM 7

Purge VSV

ECM Terminal Names	Between PRG and E01
Tester Ranges	10 V/DIV, 50 msec./DIV
Conditions	Idling

HINT:

If the waveform is not similar to the illustration, check the waveform again after idling for 10 minutes or more.

8. WAVEFORM 8

Vehicle speed signal

ECM Terminal Names	Between SPD and E1
Tester Ranges	2 V/DIV, 20 msec./DIV
Conditions	Driving at 12 mph (20 km/h)

HINT:

The wavelength becomes shorter as the vehicle speed increases.

9. WAVEFORM 9

Throttle actuator positive terminal

ECM Terminal Names	Between M+ and ME01
Tester Ranges	5 V/DIV, 1 msec./DIV
Conditions	Idling with warm engine

HINT:

The duty ratio varies depending on the throttle actuator operation.

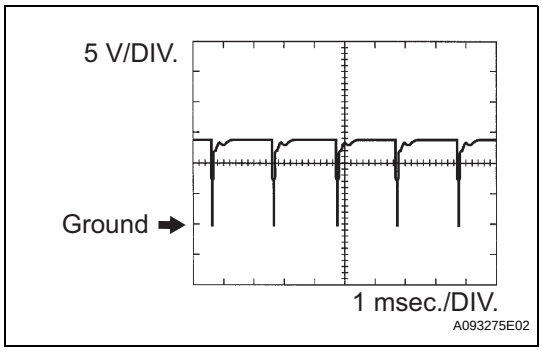

10. WAVEFORM 10
Throttle actuator negative terminal

ECM Terminal Names	Between M- and ME01
Tester Ranges	5 V/DIV, 1 msec./DIV
Conditions	Idling with warm engine

HINT:
The duty ratio varies depending on the throttle actuator operation.

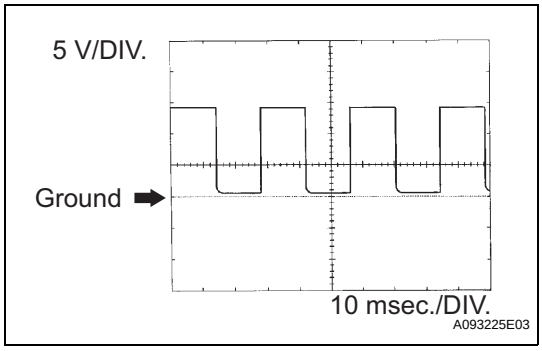

11. WAVEFORM 11
Engine speed signal

ECM Terminal Names	Between TACH and E1
Tester Ranges	5 V/DIV, 10 msec./DIV
Conditions	Idling

HINT:
The wavelength becomes shorter as the engine rpm increases.

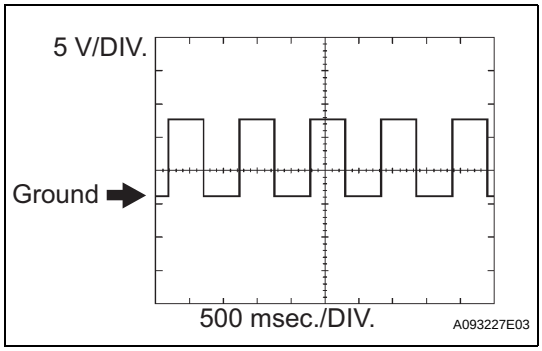

12. WAVEFORM 12
Airbag sensor assembly

ECM Terminal Names	Between F/PS and E1
Tester Ranges	5 V/DIV, 500 msec./DIV
Conditions	Idling with warm engine

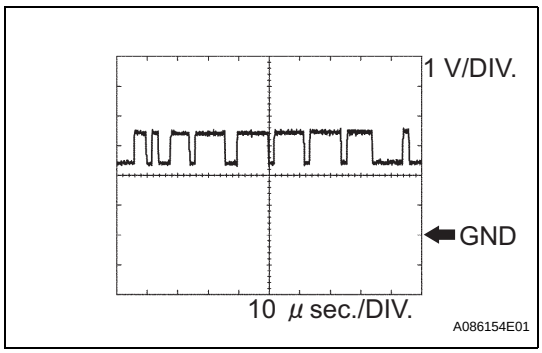

13. WAVEFORM 13
CAN communication signal (Reference)

ECM Terminal Names	Between CANH and E1
Tester Ranges	1 V/DIV, 10μsec./DIV
Conditions	Ignition switch ON

HINT:
The wavelength varies depending on the CAN communication signal.

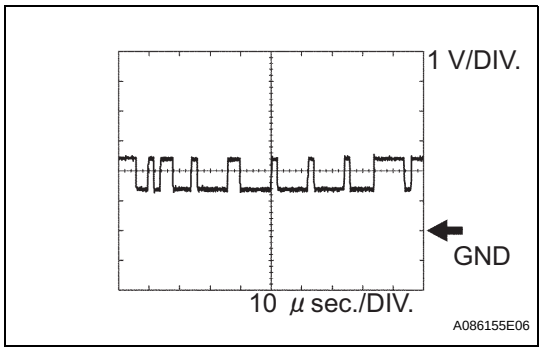

14. WAVEFORM 14
CAN communication signal (Reference)

ECM Terminal Names	Between CANL and E1
Tester Ranges	1 V/DIV, 10μsec./DIV
Conditions	Ignition switch ON

HINT:
The wavelength varies depending on the CAN communication signal.

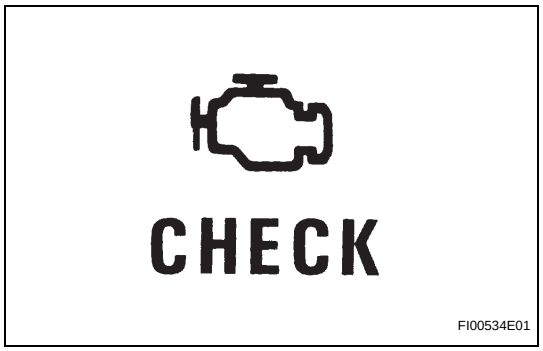

DIAGNOSIS SYSTEM

1. DESCRIPTION

When troubleshooting OBD II (On-Board Diagnostics) vehicles, an intelligent tester (complying with SAE J1987) must be connected to the DLC3 (Data Link Connector 3) of the vehicle. Various data in the vehicle's ECM (Engine Control Module) can be then read.

OBD II regulations require that the vehicle's on-board computer illuminates the MIL (Malfunction Indicator Lamp) on the instrument panel when the computer detects a malfunction in:

(a) The emission control systems and components

(b) The power train control components (which affect vehicle emissions)

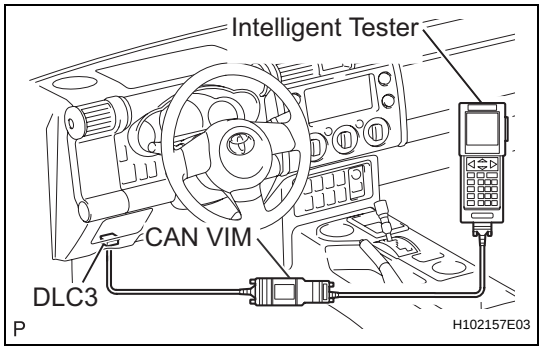

(c) The computer itself

In addition, the applicable DTCs (Diagnostic Trouble Codes) prescribed by SAE J2012 are recorded on 3 consecutive trips, the MIL turns off automatically but the DTCs remain recorded in the ECM memory.

To check DTCs, connect an intelligent tester to the DLC3. The tester displays DTCs, freeze frame data, and a variety of engine data. The DTCs and freeze frame data can be erased with the tester (See page ES-38).

In order to enhance OBD function on vehicles and develop the Off-Board diagnosis system, CAN communication is introduced in this system (CAN: Controller Area Network). It minimizes a gap between technician skills and vehicle technology. CAN is a network, which uses a pair of data transmission lines, spanning multiple computers and sensors. It allows a high speed communication between the systems and to simplify the wire harness connection.

Since this system is equipped with the CAN communication, connecting the CAN VIM (VIM: Vehicle Interface Module) with an intelligent tester is necessary to display any information from the ECM. (Also the communication between an intelligent tester and the ECM uses CAN communication signals.) When confirming the DTCs and any data of the ECM, connect the CAN VIM between the DLC3 and an intelligent tester.

2. NORMAL MODE AND CHECK MODE

The diagnosis system operates in normal mode during normal vehicle use. In normal mode, 2 trip detection logic is used to ensure accurate detection of malfunctions. Check mode is also available as an option for technicians. In check mode, 1 trip detection logic is used for simulating malfunction symptoms and increasing the system's ability to detect malfunctions, including intermittent problems (intelligent tester only) (See page ES-13).

3. 2 TRIP DETECTION LOGIC

When a malfunction is first detected, the malfunction is temporarily stored in the ECM memory (1st trip). If the same malfunction is detected during the next subsequent drive cycle, the MIL is illuminated (2nd trip).

4. FREEZE FRAME DATA

Freeze frame data record the engine condition (fuel system, calculated engine load, engine coolant temperature, fuel trim, engine speed, vehicle speed, etc.) when malfunctions are detected. When troubleshooting, freeze frame data can help determine if the vehicle was moving or stationary, if the engine was warmed up or not, if the air-fuel ratio was lean or rich, and other data, from the time the malfunction occurred.

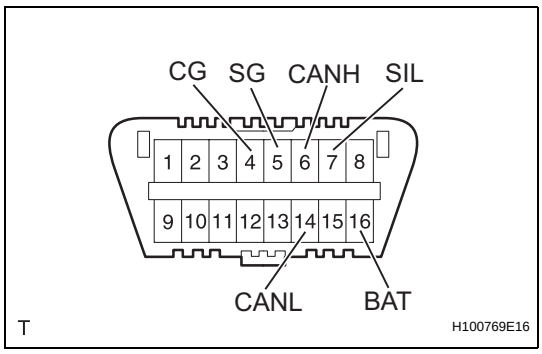

5. DLC3 (Data Link Connector 3)

The vehicle's ECM uses the ISO 15765-4 for communication protocol. The terminal arrangement of the DLC3 complies with SAE J1962 and matches the ISO 15765-4 format.

Symbols	Terminal No.	Names	Reference terminals	Results	Conditions
SIL	7	Bus "+" line	5 - Signal ground	Pulse generation	During transmission
CG	4	Chassis ground	Body ground	1 Ω or less	Always
SG	5	Signal ground	Body ground	1 Ω or less	
BAT	16	Battery positive	Body ground	11 to 14 V	
CANH	6	CAN "High" line	CANL	54 to 69 Ω	Ignition switch OFF *
			Battery positive	6 kΩ or higher	
			CG	200 Ω or higher	
CANL	14	CAN "Low" line	Battery positive	6 kΩ or higher	
			CG	200 Ω or higher	

NOTICE:

***: Before measuring the resistance, leave the vehicle as is for at least 1 minute and do not operate the ignition switch, any other switches or the doors.**

HINT:

The DLC3 is the interface prepared for reading various data from the vehicle's ECM. After connecting the cable of an intelligent tester, turn the ignition switch ON and turn the tester ON. If a communication failure message is displayed on the tester screen (on the tester: UNABLE TO CONNECT TO VEHICLE), a problem exists in either the vehicle or tester. In order to identify the location of the problem, connect the tester to another vehicle.

If communication is normal: Inspect the DLC3 on the original vehicle.

If communication is impossible: The problem is probably with the tester itself. Consult the Service Department listed in the instruction manual.

6. **BATTERY VOLTAGE**
Standard Voltage:
11 to 14 V
If the voltage is below 11 V, recharge the battery before proceeding.

7. **MIL (Malfunction Indicator Lamp)**
(a) The MIL is illuminated when the ignition switch is first turned ON (the engine is not running).
(b) The MIL should turn off when the engine is started. If the MIL remains illuminated, the diagnosis system has detected a malfunction or abnormality in the system.
HINT:
If the MIL is not illuminated when the ignition switch is first turned ON, check the MIL circuit (See page ES-404).

8. **ALL READINESS**
(a) For the vehicle, using the intelligent tester allows readiness codes corresponding to all DTCs to be read. When diagnosis (normal or malfunctioning) has been complete, readiness codes are set. Select the following menu items: ENHANCED OBD II / MONITOR INFO on the intelligent tester.

ES

DTC CHECK / CLEAR

NOTICE:
When the diagnosis system is changed from normal mode to check mode or vice versa, all DTCs and freeze frame data recorded in normal mode are erased. Before changing modes, always check and make a note of DTCs and freeze frame data.
HINT:

- DTCs which are stored in the ECM can be displayed on an intelligent tester. An intelligent tester can display current and pending DTCs.
- Some DTCs are not set if the ECM does not detect the same malfunction again during a second consecutive driving cycle. However, such malfunctions, detected on only one occasion, are stored as pending DTCs.

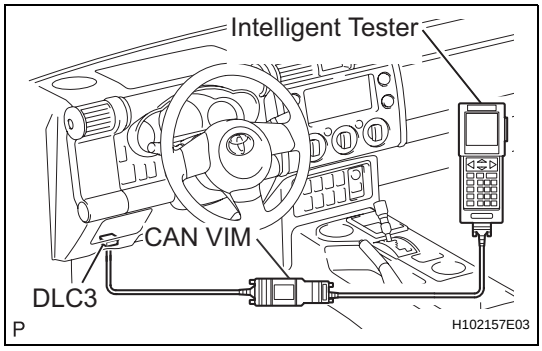

1. CHECK DTC (Using an intelligent tester)
(a) Connect an intelligent tester to the DLC3.
(b) Turn the ignition switch ON.
(c) Turn the tester ON.
(d) Select the following menu items: DIAGNOSIS / ENHANCED OBD II / DTC INFO / CURRENT CODES.
(e) Check the DTC(s) and freeze frame data, and then write them down.
(f) Check the details of the DTC(s) (See page ES-57).

2. CLEAR DTC (Using an intelligent tester)
(a) Connect an intelligent tester to the DLC3.
(b) Turn the ignition switch ON.
(c) Turn the tester ON.
(d) Select the following menu items: DIAGNOSIS / ENHANCED OBD II / DTC INFO / CLEAR CODES.
(e) Press the YES button.

3. CLEAR DTC (Without using an intelligent tester)
(a) Perform either one of the following operations.
(1) Disconnect the negative battery cable for more than 1 minute.
(2) Remove the EFI and ETCS fuses from the Relay Block (R/B) located inside the engine compartment for more than 1 minute.

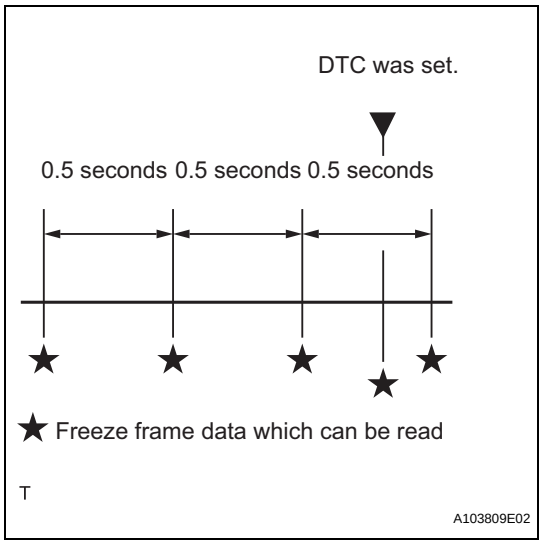

FREEZE FRAME DATA

1. DESCRIPTION

Freeze frame data record the engine conditions (fuel system, calculated load, engine coolant temperature, fuel trim, engine speed, vehicle speed, etc.) when a malfunction is detected. When troubleshooting, it can help determine if the vehicle was running or stopped, the engine was warmed up or not, the air-fuel ratio was LEAN or RICH, and other data, from the time the malfunction occurred.

HINT:

If it is impossible to replicate the problem even though a DTC is detected, confirm the freeze frame data.

The ECM records engine conditions in the form of freeze frame data every 0.5 seconds. Using an intelligent tester, five separate sets of freeze frame data, including the data values at the time when the DTC was set, can be checked.

- 3 data sets before the DTC was set
- 1 data set when the DTC was set
- 1 data set after the DTC was set

These data sets can be used to simulate the conditions of the vehicle around the time of the occurrence of the malfunction. The data may assist in identifying of the cause of the malfunction, and in judging whether it was temporary or not.

ES

2. LIST OF FREEZE FRAME DATA

LABEL (Intelligent Tester Display)	Measure Item/Range	Diagnostic Note
INJECTOR	Injector	-
IGN ADVANCE	Ignition advance	-
CALC LOAD	Calculate load	Calculated load by ECM
VEHICLE LOAD	Vehicle load	-
MAF	Mass air flow volume	If value approximately 0.0 g/sec: • Mass air flow meter power source circuit open or short • VG circuit open or short If value 160.0 g/sec or more: • E2G circuit open
ENGINE SPD	Engine speed	-
VEHICLE SPD	Vehicle speed	Speed indicated on speedometer
COOLANT TEMP	Engine coolant temperature	If value -40°C (-40°F), sensor circuit open If value 140°C (284°F) or more, sensor circuit shorted
INTAKE AIR	Intake air temperature	If value -40°C (-40°F), sensor circuit open If value 140°C (284°F) or more, sensor circuit shorted
AIR-FUEL RATIO	Air-fuel ratio	-
PURGE DENSITY	Learning value of purge density	-
EVAP PURGE FLOW	Purge flow	-
EVAP PURGE VSV	EVAP purge VSV duty ratio	-
KNOCK CRRT VAL	Correction learning value of knocking	-
KNOCK FB VAL	Feedback value of knocking	-

LABEL (Intelligent Tester Display)	Measure Item/Range	Diagnostic Note
ACCEL POS #1	Absolute Accelerator Pedal Position (APP) No. 1	-
ACCEL POS #2	Absolute APP No. 2	-
THROTTLE POS	Throttle position	Read value with ignition switch ON (Do not start engine)
THROTTLE POS	Throttle sensor positioning	Read value with ignition switch ON (Do not start engine)
THROTTLE POS #2	Throttle sensor positioning #2	-
THROTTLE MOT	Throttle motor	-
O2S B1 S2	Heated oxygen sensor output voltage	Performing INJ VOL or A/F CONTROL function of ACTIVE TEST enables technician to check voltage output of sensor
O2S B2 S2	Heated oxygen sensor output voltage	Performing INJ VOL or A/F CONTROL function of ACTIVE TEST enables technician to check voltage output of sensor
AFS B1 S1	A/F sensor output voltage	Performing INJ VOL or A/F CONTROL function of ACTIVE TEST enables technician to check voltage output of sensor
AFS B2 S1	A/F sensor output voltage	Performing INJ VOL or A/F CONTROL function of ACTIVE TEST enables technician to check voltage output of sensor
AFS B2 S1	A/F sensor output current	Performing INJ VOL or A/F CONTROL function of ACTIVE TEST enables technician to check current output of sensor
TOTAL FT #1	Total fuel trim (Bank 1)	-
TOTAL FT #2	Total fuel trim (Bank 2)	-
SHORT FT #1	Short-term fuel trim (Bank 1)	Short-term fuel compensation used to maintain air-fuel ratio at stoichiometric air-fuel ratio
LONG FT #1	Long-term fuel trim (Bank 1)	Overall fuel compensation carried out in long-term to compensate a continual deviation of short-term fuel trim from central valve
SHORT FT #2	Short-term fuel trim (Bank 2)	Short-term fuel compensation used to maintain air-fuel ratio at stoichiometric air-fuel ratio
LONG FT #2	Long-term fuel trim (Bank 2)	Overall fuel compensation carried out in long-term to compensate a continual deviation of short-term fuel trim from central valve
FUEL SYS #1	Fuel system status (Bank1)	• OL (Open Loop): Has not yet satisfied conditions to go closed loop • CL (Closed Loop): Using heated oxygen sensor as feedback for fuel control • OL DRIVE: Open loop due to driving conditions (fuel enrichment) • OL FAULT: Open loop due to detected system fault • CL FAULT: Closed loop but heated oxygen sensor, which used for fuel control, malfunctioning
FUEL SYS #2	Fuel system status (Bank2)	• OL (Open Loop): Has not yet satisfied conditions to go closed loop • CL (Closed Loop): Using heated oxygen sensor as feedback for fuel control • OL DRIVE: Open loop due to driving conditions (fuel enrichment) • OL FAULT: Open loop due to detected system fault • CL FAULT: Closed loop but heated oxygen sensor, which used for fuel control, malfunctioning

LABEL (Intelligent Tester Display)	Measure Item/Range	Diagnostic Note
O2FT B1 S2	Fuel trim at heated oxygen sensor	-
O2FT B2 S2	Fuel trim at heated oxygen sensor	-
AF FT B1 S1	Fuel trim at A/F sensor	-
AFS B1 S1	A/F sensor output current	Performing INJ VOL or A/F CONTROL function of ACTIVE TEST enables technician to check current output of sensor
AF FT B2 S1	Fuel trim at A/F sensor	-
CAT TEMP B1 S1	Catalyst temperature	-
CAT TEMP B2 S1	Catalyst temperature	-
CAT TEMP B1 S2	Catalyst temperature	-
CAT TEMP B2 S2	Catalyst temperature	-
S O2S B1 S2	Sub heated oxygen sensor impedance	-
S O2S B2 S2	Sub heated oxygen sensor impedance	-
INI COOL TEMP	Initial engine coolant temperature	-
INI INTAKE TEMP	Initial intake air temperature	-
INJ VOL	Injection volume	-
STARTER SIG	Starter signal	-
PS SW	Power steering signal	-
PS SIGNAL	Power steering signal (history)	This signal status usually ON until battery terminals disconnected
CTP SW	Closed throttle position switch	-
A/C SIG	A/C signal	-
ELECT LOAD SIG	Electrical load signal	-
STOP LIGHT SW	Stop light switch	-
BATTERY VOLTAGE	Battery voltage	-
ATM PRESSURE	Atmospheric pressure	-
FUEL PMP SP CTL	Fuel pump speed control status	-
ACIS CTRL B2	ACIS VSV status	-
ACT VSV	A/C cut status	-
VVT CTRL B2	VVT control status	-
EVAP (Purge) VSV	EVAP purge VSV	VSV for EVAP controlled by ECM (ground side duty control)
FUEL PUMP / SPD	Fuel pump speed status	-
VVT CTRL B1	VVT control status	-
VACUUM PUMP	Key-off EVAP system pump status	-
EVAP VENT VAL	Key-off EVAP system vent valve status	-
TC/TE1	TC and TE1 terminals of DLC3	-
ENG SPEED #1	Engine speed for cylinder 1	-
ENG SPEED #2	Engine speed for cylinder 2	-
ENG SPEED #3	Engine speed for cylinder 3	-
ENG SPEED #4	Engine speed for cylinder 4	-
ENG SPEED #5	Engine speed for cylinder 5	-
ENG SPEED #6	Engine speed for cylinder 6	-
ENG SPEED ALL	Engine speed for all cylinders	-
VVTL AIM ANGL #1	VVT aim angle	-
VVT CHNG ANGL #1	VVT change angle	-
VVT OCV DUTY B1	VVT OCV operation duty	-
VVTL AIM ANGL #2	VVT aim angle	-
VVT CHNG ANGL #2	VVT change angle	-
VVT OCV DUTY B2	VVT OCV operation duty	-

LABEL (Intelligent Tester Display)	Measure Item/Range	Diagnostic Note
FC IDL	Idle fuel cut	ON: when throttle valve fully closed and engine speed over 3,500 rpm
FC TAU	FC TAU	Fuel cut being performed under very light load to prevent engine combustion from becoming incomplete
IGNITION	Ignition	-
CYL #1	Cylinder #1 misfire rate	Displayed in only idling
CYL #2	Cylinder #2 misfire rate	Displayed in only idling
CYL #3	Cylinder #3 misfire rate	Displayed in only idling
CYL #4	Cylinder #4 misfire rate	Displayed in only idling
CYL #5	Cylinder #5 misfire rate	Displayed in only idling
CYL #6	Cylinder #6 misfire rate	Displayed in only idling
CYL ALL	All cylinder misfire rate	Displayed in only idling
MISFIRE RPM	Misfire RPM	-
MISFIRE LOAD	Misfire load	-
MISFIRE MARGIN	Margin to detect engine misfire	-
ENG RUN TIME	Accumulated engine running time	-
TIME DTC CLEAR	Cumulative time after DTC cleared	-
DIST DTC CLEAR	Accumulated distance from DTC cleared	-
WU CYC DTC CLEAR	Warm-up cycle after DTC cleared	-

CHECK MODE PROCEDURE

HINT:
Intelligent tester only:
Compared to normal mode, check mode is more sensitive to malfunctions. Therefore, check mode can detect the malfunctions that cannot be detected by normal mode.
NOTICE:
All the stored DTCs and freeze frame data are erased if: 1) the ECM is changed from normal mode to check mode or vice versa; or 2) the ignition switch is turned from ON to ACC or OFF while in check mode.
Before changing modes, always check and make a note of any DTCs and freeze frame data.

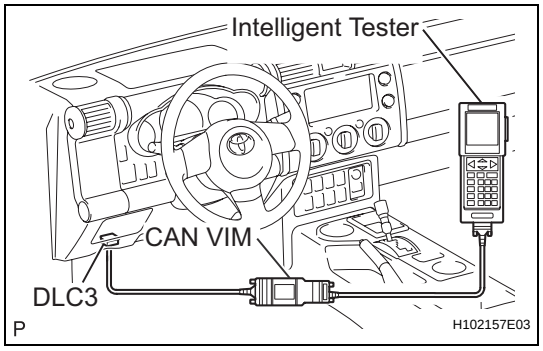

1. CHECK MODE PROCEDURE (Using an intelligent tester)

(a) Check and ensure the following conditions:
  (1) Battery voltage 11 V or more
  (2) Throttle valve fully closed
  (3) Transmission in the P or N positions
  (4) A/C switched OFF
(b) Turn the ignition switch OFF.
(c) Connect an intelligent tester to the DLC3.
(d) Turn the ignition switch ON.
(e) Turn the tester ON.
(f) Select the following menu items: DIAGNOSIS / ENHANCED OBD II / CHECK MODE.
(g) Switch the ECM from normal mode to check mode.
(h) Make sure the MIL flashes as shown in the illustration.
(i) Start the engine.
(j) Make sure the MIL turns off.
(k) Simulate the conditions of the malfunction described by the customer.
(l) Check DTCs and freeze frame data using the tester.

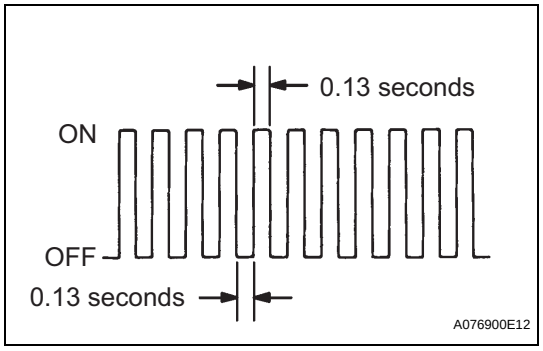

FAIL-SAFE CHART

If any of the following DTCs are set, the ECM enters fail-safe mode to allow the vehicle to be driven temporarily.

DTCs	Components	Fail-Safe Operations	Fail-Safe Deactivation Conditions
P0031, P0032, P0051 and P0052	Air-Fuel Ratio (A/F) Sensor Heater	ECM turns off A/F sensor heater.	Ignition switch OFF
P0037, P0038, P0057 and P0058	Heated Oxygen (HO2) Sensor Heater	ECM turns off HO2 sensor heater.	Ignition switch OFF
P0100, P0102 and P0103	Mass Air Flow (MAF) Meter	ECM calculates ignition timing according to engine speed and throttle valve position.	Pass condition detected
P0110, P0112 and P0113	Intake Air Temperature (IAT) Sensor	ECM estimates IAT to be 20°C (68°F).	Pass condition detected
P0115, P0117 and P0118	Engine Coolant Temperature (ECT) Sensor	ECM estimates ECT to be 80°C (176°F).	Pass condition detected
P0120, P0121, P0122, P0123, P0220, P0222, P0223, P0604, P0606, P0607, P0657, P2102, P2103, P2111, P2112, P2118, P2119 and P2135	Electronic Throttle Control System (ETCS)	ECM cuts off throttle actuator current and throttle valve returned to 6° throttle position by return spring. ECM then adjusts engine output by controlling fuel injection (intermittent fuel-cut) and ignition timing in accordance with accelerator pedal opening angle, to allow vehicle to continue at minimal speed.*	Pass condition detected and then ignition switch turned OFF
P0327, P0328, P0332 and P0333	Knock Sensor	ECM sets ignition timing to maximum retard.	Ignition switch OFF
P0351 to P0356	Igniter	ECM cuts fuel.	Pass condition detected
P2120, P2121, P2122, P2123, P2125, P2127, P2128 and P2138	Accelerator Pedal Position (APP) Sensor	APP sensor has 2 sensor circuits: Main and Sub. If either of circuits malfunctions, ECM controls engine using other circuit. If both of circuits malfunction, ECM regards accelerator pedal as being released. As a result, throttle valve is closed and engine idles.	Pass condition detected and then ignition switch turned OFF

NOTICE:

*** The vehicle can be driven slowly when the accelerator pedal is depressed firmly and slowly. If the accelerator pedal is depressed quickly, the vehicle may speed up and slow down erratically.**

DATA LIST / ACTIVE TEST

1. DATA LIST

HINT:

By reading the DATA LIST displayed on an intelligent tester, you can check values, including those of the switches, sensors, and actuators, without removing any parts. Reading the DATA LIST as the first step of troubleshooting is one method of shortening diagnostic time.

NOTICE:

In the table below, the values listed under Normal Condition are for reference only. Do not depend solely on these values when determining whether or not a part is faulty.

(a) Warm up the engine.
(b) Turn the ignition switch OFF.
(c) Connect an intelligent tester to the DLC3.
(d) Turn the ignition switch ON.
(e) Turn the tester ON.
(f) Select the following menu items: DIAGNOSIS / ENHANCED OBD II / DATA LIST.
(g) Check the values by referring to the table below.

Intelligent Tester Display	Measurement Item: Range (Display)	Normal Condition *	Diagnostic Note
INJECTOR	Injection period of No. 1 cylinder: Min.: 0 ms, Max.: 32.64 ms	1.6 to 2.4 ms: Idling	-
IGN ADVANCE	Ignition timing advance for No. 1 cylinder/ Min.: -64 deg., Max.: 63.5 deg.	BTDC 7 to 24°: Idling	-
CALC LOAD	Calculated load by ECM: Min.: 0 %, Max.: 100 %	• 11.4 to 16.4 %: Idling • 13.1 to 18.9 %: Running without load (2,500 rpm)	-
VEHICLE LOAD	Vehicle load: Min.: 0 %, Max.: 25,700 %	Actual vehicle load	-
MAF	Air flow rate from MAF meter: Min.: 0 g/sec, Max.: 655.35 g/sec	3.2 to 4.7 g/sec: Idling 13.1 to 18.9 g/sec: 2,500 rpm	If value approximately 0.0 g/sec: • Mass air flow meter power source circuit open • VG circuit open or short If value 160.0 g/sec or more: • E2G circuit open
ENGINE SPD	Engine speed: Min.: 0 rpm, Max.: 16,383.75 rpm	650 to 750 rpm: Idling	-
VEHICLE SPD	Vehicle speed: Min.: 0 km/h, Max.: 255 km/h	Actual vehicle speed	Speed indicated on speedometer
COOLANT TEMP	Engine coolant temperature: Min.: -40°C, Max.: 140°C	80 to 100°C (176 to 212°F):After warming up	• If value -40°C (-40°F): sensor circuit open • If value 140°C (284°F) or more: sensor circuit shorted
INTAKE AIR	Intake air temperature: Min.: -40°C, Max.: 140°C	Equivalent to ambient air temperature	• If value -40°C (-40°F): sensor circuit open • If value 140°C (284°F) or more: sensor circuit shorted
AIR-FUEL RATIO	Air-fuel ratio: Min.: 0, Max.: 1.999	0.8 to 1.2: During idling	-
PURGE DENSITY	Learning value of purge density/ Min.: -50 , Max.: 350	-40 to 0 %: Idling	Service data
EVAP PURGE FLOW	Purge flow: Min.: 0 %, Max.: 102.4 %	0 to 100 %: Idling	-

Intelligent Tester Display	Measurement Item: Range (Display)	Normal Condition *	Diagnostic Note
EVAP PURGE VSV	EVAP (Purge) VSV control duty: Min.: 0 %, Max.: 100 %	0 to 100 %: During idling	Order signal from ECM
VAPOR PRES PUMP	Vapor pressure: Min.: 33.853 kPa, Max.: 125.596 kPa	Approximately 100 kPa: Ignition switch ON	EVAP system pressure monitored by canister pressure sensor
VAPOR PRES CALC	Vapor pressure: (calculated) Min.: -5.632 kPa, Max.: 7,153,264 kPa	Approximately 100 kPa: Ignition switch ON	EVAP system pressure monitored by canister pressure sensor
KNOCK CRRT VAL	Correction learning value of knocking: Min.: -64° CA, Max.: 1,984° CA	0 to 22 °CA: Driving, 44 mph (70 km/h)	Service data
KNOCK FB VAL	Feedback value of knocking: Min.: -64° CA, Max.: 1,984° CA	-22 to 0 °CA Driving, 44 mph (70 km/h)	Service data
ACCEL POS #1	Absolute Accelerator Pedal Position (APP) No. 1: Min.: 0 %, Max.: 100 %	10 to 22 %: Accelerator pedal released 54 to 86 %: Accelerator pedal fully depressed	-
ACCEL POS #2	Absolute APP No. 2: Min.: 0 %, Max.: 100 %	12 to 42 %: Accelerator pedal released 66 to 98 %: Accelerator pedal fully depressed	-
ACCEL POS #1	APP sensor No. 1 voltage: Min.: 0 V, Max.: 5 V	0.5 to 1.1 V: Accelerator pedal released. 2.6 to 4.5t V: Accelerator pedal fully depressed.	-
ACCEL POS #2	APP sensor No. 2 voltage: Min.: 0 V, Max.: 5 V	1.2 to 2.0 V: Accelerator pedal released. 3.4 to 5.0 V: Accelerator pedal fully depressed.	-
ACCEL IDL POS	Whether or not accelerator pedal position sensor detecting idle: ON or OFF	ON: Idling	-
THRTL LEARN VAL	Throttle valve fully closed (learned value): Min.: 0 V, Max.: 5 V	0.4 to 0.8 V	-
ACCEL SSR #1 AD	Accelerator fully closed value No.1 (AD): Min.: 0, Max.: 4.9804 V	-	ETCS service data
ACCEL LRN VAL#1	Accelerator fully closed learning value No.1: Min.: 0, Max.: 124.512	-	ETCS service data
ACCEL LRN VAL#2	Accelerator fully closed learning value No.2: Min.: 0, Max.: 124.512	-	ETCS service data
FAIL #1	Whether or not fail safe function executed: ON or OFF	ON: ETCS has failed	-
FAIL #2	Whether or not fail safe function executed: ON or OFF	ON: ETCS has failed	-
ST1	Starter signal: ON or OFF	ON: Cranking	-
SYS GUARD JUDGE	System guard: ON or OFF	-	ETCS service data
OPN MALFUNCTION	Open side malfunction: ON or OFF	-	ETCS service data
THROTTLE POS	Absolute throttle position sensor: Min.: 0 %, Max.: 100 %	• 10 to 24 %: Throttle fully closed • 64 to 96 %: Throttle fully open	Read value with intrusive operation (active test)

Intelligent Tester Display	Measurement Item: Range (Display)	Normal Condition *	Diagnostic Note
THROTTL IDL POS	Whether or not throttle position sensor detecting idle: ON or OFF	ON: Idling	-
THRTL REQ POS	Throttle requirement position: Min.: 0 V, Max.: 5 V	0.5 to 1.0 V: Idling	-
THROTTLE POS	Throttle sensor positioning: Min.: 0 %, Max.: 100 %	0 to 10 %: Idling	Calculated value based on VTA1
THROTTLE POS #2	Throttle sensor positioning #2: Min.: 0 %, Max.: 100 %	-	Calculated value based on VTA2
THROTTLE POS #1	Throttle position No. 1: Min.: 0 V, Max.: 5 V	• 0.5 to 1.2 V: Throttle fully closed • 3.2 to 4.8 V: Throttle fully opened	-
THROTTLE POS #2	Throttle position No. 2: Min.: 0 V, Max.: 5 V	• 2.0 to 2.9 V: Throttle fully closed • 4.6 to 5.0 V: Throttle fully open	Read value with intrusive operation (active test)
THRTL COMND VAL	Throttle position command value: Min.: 0 V, Max.: 4.98 V	0.5 to 4.8 V	ETCS service data
THROTTLE SSR #1	Throttle sensor opener position No. 1: Min.: 0 V, Max.: 4.9804 V	0.6 to 1.0 V	ETCS service data
THROTTLE SSR #2	Throttle sensor opener position No. 2: Min.: 0 V, Max.: 4.9804 V	2.0 to 2.6 V	ETCS service data
THRTL SSR #1 AD	Throttle sensor opener position No.1 (AD): Min.: 0 V, Max.: 4.9804 V	0.6 to 0.9 V	ETCS service data
THROTTLE MOT	Whether or not throttle motor control permitted: ON or OFF	ON: Idling	Read value with ignition switch ON (Do not start engine)
THROTTLE MOT	Throttle motor current: Min.: 0 A, Max.: 80 A	0 to 3.0 A: Idling	-
THROTTLE MOT	Throttle motor: Min.: 0 %, Max.: 100 %	0.5 to 40 %: Idling	-
THRTL MOT (OPN)	Throttle motor duty ratio (open): Min.: 0 %, Max.: 100 %	-	ETCS service data
THRTL MOT (CLS)	Throttle motor duty ratio (close): Min.: 0 %, Max.: 100 %	-	ETCS service data
O2S B1 S2	Heated oxygen sensor output voltage for bank 1 sensor 2: Min.: 0 V, Max.: 1.275 V	0.1 to 0.9 V: Driving 44 mph (70 km/h)	Performing INJ VOL or A/F CONTROL function of ACTIVE TEST enables technician to check voltage output of sensor
O2S B2 S2	Heated oxygen sensor output voltage for bank 2 sensor 2: Min.: 0 V, Max.: 1.275 V	0.1 to 0.9 V: Driving 44 mph (70 km/h)	Performing INJ VOL or A/F CONTROL function of ACTIVE TEST enables technician to check voltage output of sensor
AFS B1 S1	A/F sensor output voltage for bank 1 sensor 1: Min.: 0 V, Max.: 7.999 V	2.8 to 3.8 V: Idling	Performing INJ VOL or A/F CONTROL function of ACTIVE TEST enables technician to check voltage output of sensor
AFS B2 S1	A/F sensor output voltage for bank 2 sensor 1: Min.: 0 V, Max.: 7.999 V	2.8 to 3.8 V: Idling	Performing INJ VOL or A/F CONTROL function of ACTIVE TEST enables technician to check voltage output of sensor
AFS B2 S1	A/F sensor output current for bank 2 sensor 1: Min.: -128 mA, Max.: 127.99 mA	-	Performing INJ VOL or A/F CONTROL function of ACTIVE TEST enables technician to check current output of sensor

Intelligent Tester Display	Measurement Item: Range (Display)	Normal Condition *	Diagnostic Note
TOTAL FT #1	Total fuel trim of bank 1 Average value for fuel trim system of bank 1: Min.: -0.5, Max.: 0.496	-0.2 to 0.2: Idling	-
TOTAL FT #2	Total fuel trim of bank 2 Average value for fuel trim system of bank 2: Min.: -0.5, Max.: 0.496	-0.2 to 0.2: Idling	-
SHORT FT #1	Short-term fuel trim of bank 1: Min.: -100 %, Max.: 99.2%	0 +- 20 %	Short-term fuel compensation used to maintain air-fuel ratio at stoichiometric air-fuel ratio
LONG FT #1	Long-term fuel trim of bank 1: Min.: -100 %, Max.: 99.2 %	0 +- 20 %	Overall fuel compensation carried out in long-term to compensate continual deviation of short-term fuel trim from central value
SHORT FT #2	Short-term fuel trim of bank 2: Min.: -100 %, Max.: 99.2%	0 +- 20 %	Short-term fuel compensation used to maintain air-fuel ratio at stoichiometric air-fuel ratio
LONG FT #2	Long-term fuel trim of bank 2: Min.: -100 %, Max.: 99.2 %	0 +- 20 %	Overall fuel compensation carried out in long-term to compensate continual deviation of short-term fuel trim from central value
FUEL SYS #1	Fuel system status (Bank1): OL or CL or OL DRIVE or OL FAULT or CL FAULT	CL: Idling after warming up	• OL (Open Loop): Has not yet satisfied conditions to go closed loop • CL (Closed Loop): Using heated oxygen sensor as feedback for fuel control • OL DRIVE: Open loop due to driving conditions (fuel enrichment) • OL FAULT: Open loop due to detected system fault • CL FAULT: Closed loop but heated oxygen sensor, which used for fuel control, malfunctioning
FUEL SYS #2	Fuel system status (Bank2): OL or CL or OL DRIVE or OL FAULT or CL FAULT	CL: Idling after warming up	• OL (Open Loop): Has not yet satisfied conditions to go closed loop • CL (Closed Loop): Using heated oxygen sensor as feedback for fuel control. • OL DRIVE: Open loop due to driving conditions (fuel enrichment) • OL FAULT: Open loop due to detected system fault • CL FAULT: Closed loop but heated oxygen sensor, which used for fuel control, malfunctioning
O2FT B1 S2	Short-term fuel trim associated with bank 1 sensor 2: Min.: -100 %, Max.: 99.2 %	-	-
O2FT B2 S2	Short-term fuel trim associated with bank 2 sensor 2: Min.: -100 %, Max.: 99.2 %	-	-
AF FT B1 S1	Short-term fuel trim associated with bank 1 sensor 1: Min.: 0, Max.: 1.999	• Value less than 1 (0.000 to 0.999) = Lean • Stoichiometric air-fuel ratio=1 • Value greater than 1 (1.001 to 1.999) = RICH	-

Intelligent Tester Display	Measurement Item: Range (Display)	Normal Condition *	Diagnostic Note
AFS B1 S1	A/F sensor output current for bank 1 sensor 1: Min.: -128 mA, Max.: 127.99 mA	-	Performing INJ VOL or A/F CONTROL function of ACTIVE TEST enables technician to check current output of sensor
AF FT B2 S1	Short-term fuel trim associated with bank 2 sensor 1: Min.: 0, Max.: 1.999	• Value less than 1 (0.000 to 0.999) = Lean • Stoichiometric air-fuel ratio=1 • Value greater than 1 (1.001 to 1.999) = RICH	-
CAT TEMP B1S1	Catalyst temperature (Bank 1, Sensor 1): Min.: -40, Max.: 6,513.5 °C	-	-
CAT TEMP B2S1	Catalyst temperature (Bank 2, Sensor 1): Min.: -40, Max.: 6,513.5 °C	-	-
CAT TEMP B1S2	Catalyst temperature (Bank 1, Sensor 2): Min.: -40, Max.: 6,513.5 °C	-	-
CAT TEMP B2S2	Catalyst temperature (Bank 2, Sensor 2): Min.: -40, Max.: 6,513.5 °C	-	-
S O2S B1 S2	Sub heated oxygen sensor impedance (Bank 1, Sensor 2): Min.: 0 Ω, Max.: 21247.68 Ω	-	-
S O2S B2 S2	Sub heated oxygen sensor impedance (Bank 2, Sensor 2): Min.: 0 Ω, Max.: 21247.68 Ω	-	-
INI COOL TEMP	Initial engine coolant temperature: Min.: -40°C, Max.: 120°C	Coolant temperature when engine started	Service data
INI INTAKE TEMP	Initial intake air temperature: Min.: -40°C, Max.: 120°C	Intake air temperature when engine started	Service data
INJ VOL	Injection volume (cylinder 1): Min.: 0 ml, Max.: 2.048 ml	0 to 0.5 ml	Quantity of fuel injection volume for 10 times
STARTER SIG	Starter signal: ON or OFF	ON: Cranking	-
PS SW	Power steering signal: ON or OFF	ON: Power steering operation	-
PS SIGNAL	Power steering signal (history): ON or OFF	ON: When steering wheel first turned after battery terminals connected	This signal status usually ON until battery terminals disconnected
CTP SW	Closed throttle position switch: ON or OFF	ON: Throttle fully closed OFF: Throttle open	-
A/C SIGNAL	A/C signal: ON or OFF	ON: A/C ON	-
PNP SW [NSW]	PNP switch status: ON or OFF	ON: P or N position	-
ELECT LOAD SIG	Electrical load signal: ON or OFF	ON: Headlights or defogger turned ON	-
STOP LIGHT SW	Stop light switch: ON or OFF	ON: brake pedal depressed	-
+BM	Whether or not electric throttle control system power inputted: ON or OFF	ON: Ignition switch ON and system normal	-
+BM VOLTAGE	+BM voltage: Min.: 0, Max.: 19.92182	11 to 14 (V): Ignition switch ON and system normal	ETCS service data
BATTERY VOLTAGE	Battery voltage: Min.: 0 V, Max.: 65.535 V	11 to 14 V: Idling	-

Intelligent Tester Display	Measurement Item: Range (Display)	Normal Condition *	Diagnostic Note
ACTUATOR POWER	Actuator power supply: ON or OFF	ON: Idling	ETCS service data
ATM PRESSURE	Atmospheric pressure: Min.: 0 kPa, Max.: 255 kPa	Equivalent to atmospheric pressure (absolute pressure)	-
FUEL PMP SP CTL	Fuel pump speed control status: ON/H or OFF/L	Idling: ON	-
ACIS VSV	ACIS VSV: ON or OFF	-	ON: Open OFF: Closed
ACT VSV	A/C cut status for Active Test: ON or OFF	-	Active Test support data
VVT CTRL B2	VVT control (bank 2) status: ON or OFF	-	Active Test support data
EVAP (Purge) VSV	VSV status for EVAP control: ON or OFF	-	Active Test support data
FUEL PUMP / SPD	Fuel pump/status: ON or OFF	-	Active Test support data
VVT CTRL B1	VVT control (bank 1) status: ON or OFF	-	Active Test support data
VACUUM PUMP	Key-off EVAP system pump status: ON or OFF	-	Active Test support data
EVAP VENT VAL	Key-off EVAP system vent valve status: ON or OFF	-	Active Test support data
TC/TE1	TC and CG (TE1) terminal of DLC3: ON or OFF	-	-
ENG SPEED #1	Engine RPM for cylinder 1: Min.: 0 rpm, Max.: 25,600 rpm	-	Output only when FUEL CUT #1 is performed using ACTIVE TEST
ENG SPEED #2	Engine RPM for cylinder 2: Min.: 0 rpm, Max.: 25,600 rpm	-	Output only when FUEL CUT #2 is performed using ACTIVE TEST
ENG SPEED #3	Engine RPM for cylinder 3: Min.: 0 rpm, Max.: 25,600 rpm	-	Output only when FUEL CUT #3 is performed using ACTIVE TEST
ENG SPEED #4	Engine RPM for cylinder 4: Min.: 0 rpm, Max.: 25,600 rpm	-	Output only when FUEL CUT #4 is performed using ACTIVE TEST
ENG SPEED #5	Engine RPM for cylinder 5: Min.: 0 rpm, Max.: 25,600 rpm	-	Output only when FUEL CUT #5 is performed using ACTIVE TEST
ENG SPEED #6	Engine RPM for cylinder 6: Min.: 0 rpm, Max.: 25,600 rpm	-	Output only when FUEL CUT #6 is performed using ACTIVE TEST
ENG SPEED ALL	Engine RPM for all cylinders: Min.: 0 rpm, Max.: 25,600 rpm	-	Output only when ACTIVE TEST is performed
VVTL AIM ANGL #1 *2	VVT aim angle (bank 1): Min.: 0 %, Max.: 100 %	0 to 100 %	VVT duty signal value during intrusive operation
VVT CHNG ANGL #1 *2	VVT change angle: Min.: 0°FR, Max.: 60°FR	0 to 56 °FR	Displacement angle during intrusive operation
VVT OCV DUTY B1 *2	VVT OCV operation duty: Min.: 0 %, Max.: 100 %	0 to 100 %	Requested duty value for intrusive operation
VVTL AIM ANGL #2 *2	VVT aim angle (bank 2): Min.: 0 %, Max.: 100 %	0 to 100 %	VVT duty signal value during intrusive operation
VVT CHNG ANGL #2 *2	VVT change angle (bank 2): Min.: 0°FR, Max.: 60°FR	0 to 56 °FR	Displacement angle during intrusive operation
VVT OCV DUTY B2 *2	VVT OCV (bank 2) operation duty: Min.: 0 %, Max.: 100 %	0 to 100 %	Requested duty value for intrusive operation
FC IDL	Fuel cut idle: ON or OFF	ON: Fuel cut operation	FC IDL = "ON" when throttle valve fully closed and engine speed over 3,500 rpm

Intelligent Tester Display	Measurement Item: Range (Display)	Normal Condition *	Diagnostic Note
FC TAU	Fuel cut TAU: Fuel cut during very light load: ON or OFF	ON: Fuel cut operating	Fuel cut being performed under very light load to prevent engine combustion from becoming incomplete
IGNITION	Ignition counter: Min.: 0, Max.: 600	0 to 600	-
CYL #1	Misfire ratio of cylinder 1: Min.: 0, Max.: 255	0	This item displayed in only idling
CYL #2	Misfire ratio of cylinder 2: Min.: 0, Max.: 255	0	This item displayed in only idling
CYL #3	Misfire ratio of cylinder 3: Min.: 0, Max.: 255	0	This item displayed in only idling
CYL #4	Misfire ratio of cylinde 4: Min.: 0, Max.: 255	0	This item displayed in only idling
CYL #5	Misfire ratio of cylinder 5: Min.: 0, Max.: 255	0	This item displayed in only idling
CYL #6	Misfire ratio of cylinder 6: Min.: 0, Max.: 255	0	This item displayed in only idling
CYL ALL	All cylinders misfire rate: Min.: 0, Max.: 255	0 to 35	-
MISFIRE RPM	Engine RPM for first misfire range: Min.: 0 rpm, Max.: 6,375 rpm	0 rpm: Misfire 0	-
MISFIRE LOAD	Engine load for first misfire range: Min.: 0 g/rev, Max.: 3.98 g/rev	0 g/rev: Misfire 0	-
MISFIRE MARGIN	Margin to detect engine misfire: Min.: -100 %, Max.: 99.22 %	-100 to 99.2 %	Misfire detecting margin
#CODES	Number of detected DTCs: Min.: 0, Max.: 255	0: No DTC detected	-
CHECK MODE	Check mode: ON or OFF	ON: Check mode ON	See page ES-42
SPD TEST	Check mode result for vehicle speed sensor: COMPL or INCMPL	-	-
MISFIRE TEST	Check mode result for misfire monitor: COMPL or INCMPL	-	-
OXS2 TEST	Check mode result for HO2 sensor (bank 2) : COMPL or INCMPL	-	-
OXS1 TEST	Check mode result for HO2 sensor (bank 1) : COMPL or INCMPL	-	-
A/F SSR TEST B2	Check mode result for air-fuel ratio sensor (bank 2) : COMPL or INCMPL	-	-
A/F SSR TEST B1	Check mode result for air-fuel ratio sensor (bank 1) : COMPL or INCMPL	-	-
MIL	MIL status: ON or OFF	ON: MIL ON	-
MIL ON RUN DIST	MIL ON RUN Distance: Min.: 0 km, Max.: 65,535 km	Drive distance after DTC detected	-
MIL ON RUN TIME	Running time from MIL ON: Min.: 0 min., Max.: 65,535 min.	Equivalent to running time after MIL ON	-

Intelligent Tester Display	Measurement Item: Range (Display)	Normal Condition *	Diagnostic Note
ENG RUN TIME	Engine run time: Min.: 0 s., Max.: 65,535 s.	Time after engine start	Service data
TIME DTC CLEAR	Time after DTC cleared: Min.: 0 min., Max.: 65,535 min.	Equivalent to time after DTCs erased	-
DIST DTC CLEAR	Distance after DTC cleared: Min.: 0 km, Max.: 65,535 km	Equivalent to drive distance after DTCs erased	-
WU CYC DTC CLEAR	Number of warm-up cycles after DTC cleared: Min.: 0, Max.: 255	-	-
OBD CERT	OBD requirement	OBD2	-
#CARB CODES	Number of emission related DTCs	0: No emission related DTC detected	-
COMP MON	Comprehensive component monitor: NOT AVL or AVAIL	-	-
FUEL MON	Fuel system monitor: NOT AVL or AVAIL	-	-
MISFIRE MON	Misfire monitor: NOT AVL or AVAIL	-	-
EGR MON	EGR monitor: NOT AVL or AVAIL	-	-
EGR MON	EGR monitor: COMPL or INCMPL	-	-
O2S (A/FS) HTR	O2S (A/FS) heater monitor: NOT AVL or AVAIL	-	-
O2S (A/FS) HTR	O2S (A/FS) heater monitor: COMPL or INCMPL	-	-
O2S (A/FS) MON	O2S (A/FS) monitor: NOT AVL or AVAIL	-	-
O2S (A/FS) MON	O2S (A/FS) monitor: COMPL or INCMPL	-	-
A/C MON	A/C monitor: NOT AVL or AVAIL	-	-
A/C MON	A/C monitor: COMPL or INCMPL	-	-
2nd AIR MON	2nd air monitor: NOT AVL or AVAIL	-	-
2nd AIR MON	2nd air monitor: COMPL or INCMPL	-	-
EVAP MON	EVAP monitor: NOT AVL or AVAIL	-	-
EVAP MON	EVAP monitor: COMPL or INCMPL	-	-
HTD CAT MON	Heated catalyst monitor: NOT AVL or AVAIL	-	-
HTD CAT MON	Heated catalyst monitor: COMPL or INCMPL	-	-
CAT MON	Catalyst monitor: NOT AVL or AVAIL	-	-
CAT MON	Catalyst monitor: COMPL or INCMPL	-	-
CCM ENA	Comprehensive component monitor: UNABLE or ENABLE	-	-

Intelligent Tester Display	Measurement Item: Range (Display)	Normal Condition *	Diagnostic Note
CCM CMPL	Comprehensive component monitor: COMPL or INCMPL	-	-
FUEL ENA	Fuel system monitor: UNABLE or ENABLE	-	-
FUEL CMPL	Fuel system monitor: COMPL or INCMPL	-	-
MISFIRE ENA	Misfire monitor: UNABLE or ENABLE	-	-
MISFIRE CMPL	Misfire monitor: COMPL or INCMPL	-	-
EGR ENA	EGR monitor: UNABLE or ENABLE	-	-
EGR CMPL	EGR monitor: COMPL or INCMPL	-	-
HTR ENA	O2S (A/FS) heater monitor: UNABLE or ENABLE	-	-
HTR CMPL	O2S (A/FS) heater monitor: COMPL or INCMPL	-	-
O2S (A/FS) ENA	O2S (A/FS) monitor: UNABLE or ENABLE	-	-
O2S (A/FS) CMPL	O2S (A/FS) monitor: COMPL or INCMPL	-	-
ACRF ENA	A/C monitor: UNABLE or ENABLE	-	-
ACRF CMPL	A/C monitor: COMPL or INCMPL	-	-
AIR ENA	2nd air monitor: UNABLE or ENABLE	-	-
AIR CMPL	2nd air monitor: COMPL or INCMPL	-	-
EVAP ENA	EVAP monitor: UNABLE or ENABLE	-	-
EVAP CMPL	EVAP monitor: COMPL or INCMPL	-	-
HCAT ENA	Heated catalyst monitor: UNABLE or ENABLE	-	-
HCAT CMPL	Heated catalyst monitor: COMPL or INCMPL	-	-
CAT ENA	Catalyst monitor: UNABLE or ENABLE	-	-
CAT CMPL	Catalyst monitor: COMPL or INCMPL	-	-
MODEL CODE	Identifying model code	GSJ1##	-
ENGINE TYPE	Identifying engine type	1GRFE	-
CYLINDER NUMBER	Identifying cylinder number: Min.: 0, Max.: 255	6	-
TRANSMISSION	Identifying transmission type: MT or 5AT	MT: Manual transmission 5AT: Automatic transmission	-
DESTINATION	Identifying destination	A (America)	-
MODEL YEAR	Identifying model year: Min.: 1900, Max.: 2155	200#	-
SYSTEM	Identifying engine system	GASLIN (gasoline engine)	-

*1: If no idling conditions are specified, the transmission gear selector lever should be in the N or P position, and the A/C switch and all accessory switches should be OFF.

*2: DATA LIST values are only displayed when performing the following ACTIVE TESTs: VVT B1 or VVT B2. For other ACTIVE TESTs, the DATA LIST value will be 0.

2. ACTIVE TEST

HINT:

Performing an ACTIVE TEST enables components including the relays, VSV (Vacuum Switching Valve), and actuators, to be operated without removing any parts. The ACTIVE TEST can be performed with an intelligent tester. Performing an ACTIVE TEST as the first step of troubleshooting is one method of shortening diagnostic time.

DATA LIST can be displayed during ACTIVE TESTs.

(a) Connect an intelligent tester to the DLC3.
(b) Turn the ignition switch ON.
(c) Turn the tester ON.
(d) Select the following menu items: DIAGNOSIS / ENHANCED OBD II / ACTIVE TEST.
(e) Perform the ACTIVE TEST by referring to the table below.

Intelligent Tester Displays	Test Details	Control Ranges	Diagnostic Notes
INJ VOL	Change injection volume	Between -12.5 % and 24.8 %	• All injectors tested at same time • Perform test at less than 3,000 rpm • Injection volume can be changed in 0.1 % graduations within control range
A/F CONTROL	Change injection volume	Lower by 12.5 % or increase by 25 %	• Perform test at less than 3,000 rpm • A/F CONTROL enables checking and graphing of A/F (Air Fuel Ratio) sensor and Heated Oxygen (HO2) sensor voltage outputs • To conduct test, select following menu items: ACTIVE TEST / A/F CONTROL / USER DATA / AFS B1S1 and O2S B1S2, and press YES and ENTER followed by F4
FUEL PMP SP CTL	Fuel pump speed control	ON (low speed)/ OFF (high speed)	-
INTAKE CTL VSV1	ACIS VSV	ON/OFF	-
EVAP VSV (ALONE)	Activate EVAP VSV control	ON/OFF	-
A/C CUT SIG	Control A/C cut signal	ON/OFF	-
FUEL PUMP/SPD	Activate fuel pump (C/OPN Relay)	ON/OFF	-
TC/TE1	Turn on and off TC and CG (TE1) connection	ON/OFF	• ON: TC and CG (TE1) connected • OFF: TC and CG (TE1) disconnected

Intelligent Tester Displays	Test Details	Control Ranges	Diagnostic Notes
FC IDL PROHBT	Prohibit idling fuel cut control	ON/OFF	-
ETCS OPEN SLOW	Throttle actuator	ON: throttle valve opens slowly	Test possible when following conditions met: • Ignition switch ON • Engine does not start • Fully depressing accelerator pedal (APP: 58 degrees or more)
ETCS CLOSE SLOW	Throttle actuator	ON: throttle valve closes slowly	
ETCS OPEN FAST	Throttle actuator	ON: throttle valve opens fast	
ETCS CLOSE FAST	Throttle actuator	ON: throttle valve closes fast	
VVT B1	Control the VVT (bank 1)	-128 to 127 % This value added to present OCV control duty 100 %: Maximum advance -100 % : Maximum retard	• Engine stall or rough idle when VVT actuator operated by 100 % • Test possible during engine idling
VVT CTRL B1	Turn on and off OCV (Oil Control Valve)	ON/OFF	• Engine stalls or idles roughly when OCV turned ON • Normal engine running or idling when OCV off
VVT B2	Control the VVT (bank 2)	-128 to 127 % This value added to present OCV control duty 100 %: Maximum advance -100 % : Maximum retard	• Engine stall or rough idle when VVT actuator operated by 100 % • Test possible during engine idling
VVT CTRL B2	Turn on and off OCV (Oil Control Valve)	ON/OFF	• Engine stalls or idles roughly when OCV turned ON • Normal engine running or idling when OCV off
VACUUM PUMP	Leak detection pump	ON/OFF	-
VENT VALVE	Vent valve	ON/OFF	-
FUEL CUT #1	Cylinder #1 injector fuel cut	ON/OFF	Test possible during vehicle stopping and engine idling
FUEL CUT #2	Cylinder #2 injector fuel cut	ON/OFF	
FUEL CUT #3	Cylinder #3 injector fuel cut	ON/OFF	
FUEL CUT #4	Cylinder #4 injector fuel cut	ON/OFF	
FUEL CUT #5	Cylinder #5 injector fuel cut	ON/OFF	
FUEL CUT #6	Cylinder #6 injector fuel cut	ON/OFF	
FUEL CUT ALL	All cylinder injectors fuel cut	ON/OFF	
COMPRESS CHECK	All cylinder injectors fuel cut and ignition stop	ON/OFF	*

HINT:
*: When cranking the engine, each cylinder measures the engine rpm.
In this ACTIVE TEST, the fuel and ignition of all cylinders are cut, and cranking occurs for approximately 10 seconds. Then, each cylinder measures the engine rpm. If a cylinder's engine rpm is higher than the others, that cylinder's compression pressure is compared to the others, and is determined whether it is low or not.

1. Warm up the engine.
2. Turn the ignition switch off.
3. Connect the intelligent tester to the DLC3.
4. Turn the ignition switch ON and turn the intelligent tester on.

ES

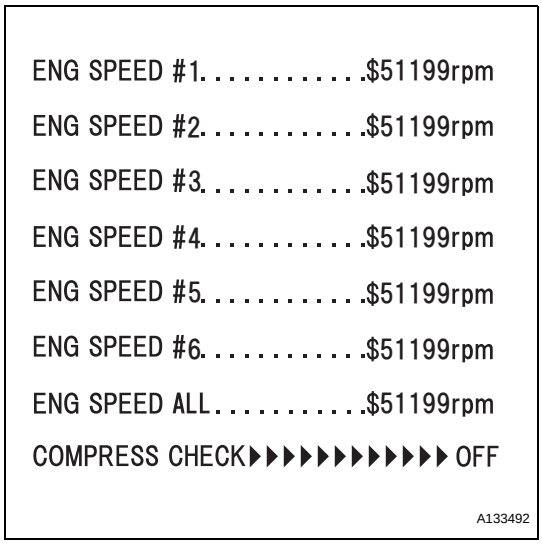

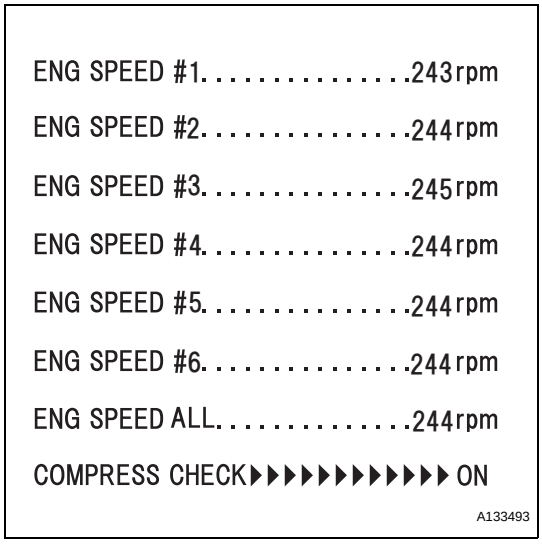

5. Select the following menu items: DIAGNOSIS / ENHANCED OBD II / ACTIVE TEST / COMPRESS CHECK.
   HINT:
   If the results are not displayed normally, select the display items from the DATA LIST before performing the ACTIVE TEST. Select the following menu items: DIAGNOSIS / ENHANCED OBD II / DATA LIST / USER DATA / ENG SPEED #1, ENG SPEED #2, ENG SPEED #3, ENG SPEED #4, ENG SPEED #5, ENG SPEED #6 (Press the YES button to change the ENG SPEED #1 to #6) and then press the ENTER button.
6. While the engine is not running, press the RIGHT or LEFT button to change the COMPRESS CHECK to ON.
   HINT:
   After performing the above procedure, the ACTIVE TEST's COMPRESS CHECK will start. Fuel injection for all cylinders is prohibited, and each cylinder's engine rpm measurement will enter standby mode.
7. Fully open the throttle.
8. Crank the engine for about 10 seconds.
9. Monitor the engine speed (ENG SPEED #1 to #6) displayed on the tester.
   HINT:
   At first, the tester's display will show each cylinder's engine rpm measurement to be extremely high. After approximately 10 seconds of engine cranking, each cylinder's engine rpm measurement will change to the actual engine rpm.
   NOTICE:
   - **After the ACTIVE TEST's COMPRESS CHECK is turned ON, it will automatically turn off after 255 seconds.**
   - **When the COMPRESS CHECK test is OFF and the engine is cranked, the engine will start.**
   - **If the COMPRESS CHECK test needs to be performed after it is turned ON and performed once, press EXIT to return to the ACTIVE TEST menu screen. Then perform the COMPRESS CHECK test again.**
   - **Use a fully-charged battery.**

3. SYSTEM CHECK

HINT:

Performing a SYSTEM CHECK enables the system, which consists of multiple actuators, to be operated without removing any parts. In addition, it can show whether or not any DTCs are set, and can detect potential malfunctions in the system. The SYSTEM CHECK can be performed with an intelligent tester.

(a) Connect an intelligent tester to the DLC3.
(b) Turn the ignition switch ON.
(c) Turn the tester ON.
(d) Select the following menu items: DIAGNOSIS / ENHANCED OBD II / SYSTEM CHECK.
(e) Perform the SYSTEM CHECK by referring to the table below.

Intelligent Tester Displays	Test Details	Recommended Fuel Temperatures	Diagnostic Notes
EVAP SYS CHECK (AUTO OPERATION)	Perform 5 steps in order to operate EVAP key-off monitor automatically	35°C (95°F) or less	• If no DTCs in PENDING CODE after performing this test, system functioning normally • Refer to EVAP Inspection Procedure (See page ES-350)
EVAP SYS CHECK (MANUAL OPERATION)	Perform 5 steps in order to operate EVAP key-off monitor manually	35°C (95°F) or less	• Used to detect malfunctioning parts • Refer to EVAP Inspection Procedure (See page ES-350)

DIAGNOSTIC TROUBLE CODE CHART

HINT:
Factors such as instrument type may cause readings to differ slightly from stated values. If any DTCs are displayed during a check mode DTC check, check the circuit for the DTCs listed in the table below. For details of each DTC, refer to the page indicated.
*: MIL flashes when a catalyst damaged misfire is detected.

DTC No.	Detection Item	Trouble Areas	MIL	Memory	See page
P0010	Camshaft Position "A" Actuator Circuit (Bank 1)	- Open or short in Oil control valve (OCV) (bank 1) circuit - OCV (bank 1) - ECM	Comes on	DTC stored	ES-67
P0011	Camshaft Position "A" - Timing Over-Advanced or System Performance (Bank 1)	- Valve timing - OCV (bank 1) - OCV filter - Camshaft timing gear assembly - ECM	Comes on	DTC stored	ES-71
P0012	Camshaft Position "A" - Timing Over-Retarded (Bank 1)	- Same as DTC P0011	Comes on	DTC stored	ES-71
P0016	Crankshaft Position - Camshaft Position Correlation (Bank 1 Sensor A)	- Mechanical system (Timing chain has jumped tooth or chain stretched) - ECM	Comes on	DTC stored	ES-76
P0018	Crankshaft Position - Camshaft Position Correlation (Bank 2 Sensor A)	- Same as DTC P0016	Comes on	DTC stored	ES-76
P0020	Camshaft Position "A" Actuator Circuit (Bank 2)	- Open or short in OCV (bank 2) circuit - OCV (bank 2) - ECM	Comes on	DTC stored	ES-67
P0021	Camshaft Position "A" - Timing Over-Advanced or System Performance (Bank 2)	- Valve timing - OCV (bank 2) - OCV filter - Camshaft timing gear assembly - ECM	Comes on	DTC stored	ES-71
P0022	Camshaft Position "A" - Timing Over-Retarded (Bank 2)	- Same as DTC P0021	Comes on	DTC stored	ES-71
P0031	Oxygen (A/F) Sensor Heater Control Circuit Low (Bank 1 Sensor 1)	- Open in Air-fuel Ratio (A/F) sensor heater circuit - A/F sensor heater - A/F sensor heater relay - ECM	Comes on	DTC stored	ES-78
P0032	Oxygen (A/F) Sensor Heater Control Circuit High (Bank 1 Sensor 1)	- Short in A/F sensor heater circuit - A/F sensor heater - A/F sensor heater relay - ECM	Comes on	DTC stored	ES-78
P0037	Oxygen Sensor Heater Control Circuit Low (Bank 1 Sensor 2)	- Open in Heated Oxygen (HO2) sensor heater circuit - HO2 sensor heater - EFI relay - ECM	Comes on	DTC stored	ES-83
P0038	Oxygen Sensor Heater Control Circuit High (Bank 1 Sensor 2)	- Short in HO2 sensor heater circuit - HO2 sensor heater - EFI relay - ECM	Comes on	DTC stored	ES-83
P0051	Oxygen (A/F) Sensor Heater Control Circuit Low (Bank 2 Sensor 1)	- Same as DTC P0031	Comes on	DTC stored	ES-78
P0052	Oxygen (A/F) Sensor Heater Control Circuit High (Bank 2 Sensor 1)	- Same as DTC P0032	Comes on	DTC stored	ES-78

DTC No.	Detection Item	Trouble Areas	MIL	Memory	See page
P0057	Oxygen Sensor Heater Control Circuit Low (Bank 2 Sensor 2)	- Same as DTC P0037	Comes on	DTC stored	ES-83
P0058	Oxygen Sensor Heater Control Circuit High (Bank 2 Sensor 2)	- Same as DTC P0038	Comes on	DTC stored	ES-83
P0100	Mass or Volume Air Flow Circuit	- Open or short in Mass Air Flow (MAF) meter circuit - MAF meter - ECM	Comes on	DTC stored	ES-90
P0101	Mass Air Flow Circuit Range / Performance Problem	- MAF meter - Air induction system - PCV hose connections	Comes on	DTC stored	ES-97
P0102	Mass or Volume Air Flow Circuit Low Input	- Open in MAF meter circuit - Short in ground circuit - MAF meter - ECM	Comes on	DTC stored	ES-90
P0103	Mass or Volume Air Flow Circuit High Input	- Short in MAF meter circuit (+B circuit) - MAF meter - ECM	Comes on	DTC stored	ES-90
P0110	Intake Air Temperature Circuit	- Open or short in Intake Air Temperature (IAT) sensor circuit - IAT sensor (built into MAF meter) - ECM	Comes on	DTC stored	ES-100
P0111	Intake Air Temperature Sensor Gradient Too High	- IAT sensor (built into MAF meter)	Comes on	DTC stored	ES-106
P0112	Intake Air Temperature Circuit Low Input	- Short in IAT sensor circuit - IAT sensor (built into MAF meter) - ECM	Comes on	DTC stored	ES-100
P0113	Intake Air Temperature Circuit High Input	- Open in IAT sensor circuit - IAT sensor (built into MAF meter) - ECM	Comes on	DTC stored	ES-100
P0115	Engine Coolant Temperature Circuit	- Open or short in Engine Coolant Temperature (ECT) sensor circuit - ECT sensor - ECM	Comes on	DTC stored	ES-109
P0116	Engine Coolant Temperature Circuit Range / Performance Problem	- Thermostat - ECT sensor	Comes on	DTC stored	ES-114
P0117	Engine Coolant Temperature Circuit Low Input	- Short in ECT sensor circuit - ECT sensor - ECM	Comes on	DTC stored	ES-109
P0118	Engine Coolant Temperature Circuit High Input	- Open in ECT sensor circuit - ECT sensor - ECM	Comes on	DTC stored	ES-109
P0120	Throttle / Pedal Position Sensor / Switch "A" Circuit	- Throttle Position (TP) sensor (built into throttle body) - ECM	Comes on	DTC stored	ES-117
P0121	Throttle / Pedal Position Sensor / Switch "A" Circuit Range / Performance Problem	- TP sensor (built into throttle body)	Comes on	DTC stored	ES-125
P0122	Throttle / Pedal Position Sensor / Switch "A" Circuit Low Input	- TP sensor (built into throttle body) - Short in VTA1 circuit - Open in VC circuit - ECM	Comes on	DTC stored	ES-117
P0123	Throttle / Pedal Position Sensor / Switch "A" Circuit High Input	- TP sensor (built into throttle body) - Open in VTA1 circuit - Open in E2 circuit - Short between VC and VTA1 circuits - ECM	Comes on	DTC stored	ES-117
P0125	Insufficient Coolant Temperature for Closed Loop Fuel Control	- Cooling system - ECT sensor - Thermostat	Comes on	DTC stored	ES-127

DTC No.	Detection Item	Trouble Areas	MIL	Memory	See page
P0128	Coolant Thermostat (Coolant Temperature Below Thermostat Regulating Temperature)	- Thermostat - Cooling system - ECT sensor - ECM	Comes on	DTC stored	ES-130
P0136	Oxygen Sensor Circuit Malfunction (Bank 1 Sensor 2)	- Open or short in HO2 sensor (bank 1 sensor 2) circuit - HO2 sensor (bank 1 sensor 2) - HO2 sensor heater (bank 1 sensor 2) - A/F sensor (bank 1 sensor 1) - EFI relay - Gas leakage from exhaust system	Comes on	DTC stored	ES-133
P0137	Oxygen Sensor Circuit Low Voltage (Bank 1 Sensor 2)	- Open in HO2 sensor (bank 1 sensor 2) circuit - HO2 sensor (bank 1 sensor 2) - HO2 sensor heater (bank 1 sensor 2) - EFI relay - Gas leakage from exhaust system	Comes on	DTC stored	ES-133
P0138	Oxygen Sensor Circuit High Voltage (Bank 1 Sensor 2)	- Short in HO2 sensor (bank 1 sensor 2) circuit - HO2 sensor (bank 1 sensor 2) - ECM internal circuit malfunction	Comes on	DTC stored	ES-133
P0141	Oxygen Sensor Heater Circuit Malfunction (Bank 1 Sensor 2)	- Open or short in HO2 sensor heater circuit - HO2 sensor heater - EFI relay - ECM	Comes on	DTC stored	ES-83
P0156	Oxygen Sensor Circuit Malfunction (Bank 2 Sensor 2)	- Open or short in HO2 sensor (bank 2 sensor 2) circuit - HO2 sensor (bank 2 sensor 2) - HO2 sensor heater (bank 2 sensor 2) - A/F sensor (bank 2 sensor 1) - EFI relay - Gas leakage from exhaust system	Comes on	DTC stored	ES-133
P0157	Oxygen Sensor Circuit Low Voltage (Bank 2 Sensor 2)	- Open in HO2 sensor (bank 2 sensor 2) circuit - HO2 sensor (bank 2 sensor 2) - HO2 sensor heater (bank 2 sensor 2) - EFI relay - Gas leakage from exhaust system	Comes on	DTC stored	ES-133
P0158	Oxygen Sensor Circuit High Voltage (Bank 2 Sensor 2)	- Short in HO2 sensor (bank 2 sensor 2) circuit - HO2 sensor (bank 2 sensor 2) - ECM internal circuit malfunction	Comes on	DTC stored	ES-133
P0161	Oxygen Sensor Heater Circuit Malfunction (Bank 2 Sensor 2)	- Same as DTC P0141	Comes on	DTC stored	ES-83
P0171	System Too Lean (Bank 1)	- Air induction system - Injector blockage - MAF meter - ECT sensor - Fuel pressure - Gas leakage from exhaust system - Open or short in A/F sensor (bank 1 sensor 1) circuit - A/F sensor (bank 1 sensor 1) - A/F sensor heater (bank 1 sensor 1) - A/F sensor heater relay - A/F sensor heater and A/F sensor heater relay circuits - PCV hose connections - PCV valve and hose - ECM	Comes on	DTC stored	ES-152

DTC No.	Detection Item	Trouble Areas	MIL	Memory	See page
P0172	System Too Rich (Bank 1)	- Injector leakage or blockage - MAF meter - ECT sensor - Ignition system - Fuel pressure - Gas leakage from exhaust system - Open or short in A/F sensor (bank 1 sensor 1) circuit - A/F sensor (bank 1 sensor 1) - A/F sensor heater (bank 1 sensor 1) - A/F sensor heater relay - A/F sensor heater and A/F sensor heater relay circuits - ECM	Comes on	DTC stored	ES-152
P0174	System Too Lean (Bank 2)	- Air induction system - Injector blockage - MAF meter - ECT sensor - Fuel pressure - Gas leakage from exhaust system - Open or short in A/F sensor (bank 2 sensor 1) circuit - A/F sensor (bank 2 sensor 1) - A/F sensor heater (bank 2 sensor 1) - A/F sensor heater relay - A/F sensor heater and A/F sensor heater relay circuits - PCV hose connections - PCV valve and hose - ECM	Comes on	DTC stored	ES-152
P0175	System Too Rich (Bank 2)	- Injector leakage or blockage - MAF meter - ECT sensor - Ignition system - Fuel pressure - Gas leakage from exhaust system - Open or short in A/F sensor (bank 2 sensor 1) circuit - A/F sensor (bank 2 sensor 1) - A/F sensor heater (bank 2 sensor 1) - A/F sensor heater relay - A/F sensor heater and A/F sensor heater relay circuits - ECM	Comes on	DTC stored	ES-152
P0220	Throttle / Pedal Position Sensor / Switch "B" Circuit	- TP sensor (built into throttle body) - ECM	Comes on	DTC stored	ES-117
P0222	Throttle / Pedal Position Sensor / Switch "B" Circuit Low Input	- TP sensor (built into throttle body) - Short in VTA2 circuit - Open in VC circuit - ECM	Comes on	DTC stored	ES-117
P0223	Throttle / Pedal Position Sensor / Switch "B" Circuit High Input	- TP sensor (built into throttle body) - Open in VTA2 circuit - Open in E2 circuit - Short between VC and VTA2 circuits - ECM	Comes on	DTC stored	ES-117
P0230	Fuel Pump Primary Circuit	- Open or short in fuel pump relay circuit - Fuel pump relay - ECM	-	DTC stored	ES-164

DTC No.	Detection Item	Trouble Areas	MIL	Memory	See page
P0300	Random / Multiple Cylinder Misfire Detected	- Open or short in engine wire harness - Connector connection - Vacuum hose connection - Ignition system - Injector - Fuel pressure - MAF meter - ECT sensor - Compression pressure - Valve clearance - Valve timing - PCV hose connections - PCV valve and hose - Air induction system - ECM	Comes on/ Blinks *	DTC stored	ES-169
P0301	Cylinder 1 Misfire Detected	- Same as DTC P0300	Comes on/ Blinks *	DTC stored	ES-169
P0302	Cylinder 2 Misfire Detected	- Same as DTC P0300	Comes on/ Blinks *	DTC stored	ES-169
P0303	Cylinder 3 Misfire Detected	- Same as DTC P0300	Comes on/ Blinks *	DTC stored	ES-169
P0304	Cylinder 4 Misfire Detected	- Same as DTC P0300	Comes on/ Blinks *	DTC stored	ES-169
P0305	Cylinder 5 Misfire Detected	- Same as DTC P0300	Comes on/ Blinks *	DTC stored	ES-169
P0306	Cylinder 6 Misfire Detected	- Same as DTC P0300	Comes on/ Blinks *	DTC stored	ES-169
P0327	Knock Sensor 1 Circuit Low Input (Bank 1 or Single Sensor)	- Short in knock sensor 1 circuit - Knock sensor 1 - ECM	Comes on	DTC stored	ES-181
P0328	Knock Sensor 1 Circuit High Input (Bank 1 or Single Sensor)	- Open in knock sensor 1 circuit - Knock sensor 1 - ECM	Comes on	DTC stored	ES-181
P0332	Knock Sensor 2 Circuit Low Input (Bank 2)	- Short in knock sensor 2 circuit - Knock sensor 2 - ECM	Comes on	DTC stored	ES-181
P0333	Knock Sensor 2 Circuit High Input (Bank 2)	- Open in knock sensor 2 circuit - Knock sensor 2 - ECM	Comes on	DTC stored	ES-181
P0335	Crankshaft Position Sensor "A" Circuit	- Open or short in Crankshaft Position (CKP) sensor circuit - CKP sensor - Sensor plate (CKP sensor plate) - ECM	Comes on	DTC stored	ES-187
P0339	Crankshaft Position Sensor "A" Circuit Intermittent	- Same as DTC P0335	-	DTC stored	ES-187
P0340	Camshaft Position Sensor "A" Circuit (Bank 1 or Single Sensor)	- Open or short in Variable Valve Timing (VVT) sensor circuit - VVT sensor - Camshaft timing gear - Jumped tooth of timing chain - ECM	Comes on	DTC stored	ES-192
P0342	Camshaft Position Sensor "A" Circuit Low Input (Bank 1 or Single Sensor)	- Same as DTC P0340	Comes on	DTC stored	ES-192
P0343	Camshaft Position Sensor "A" Circuit High Input (Bank 1 or Single Sensor)	- Same as DTC P0340	Comes on	DTC stored	ES-192
P0345	Camshaft Position Sensor "A" Circuit (Bank 2)	- Same as DTC P0340	Comes on	DTC stored	ES-192
P0347	Camshaft Position Sensor "A" Circuit Low Input (Bank 2)	- Same as DTC P0340	Comes on	DTC stored	ES-192

DTC No.	Detection Item	Trouble Areas	MIL	Memory	See page
P0348	Camshaft Position Sensor "A" Circuit High Input (Bank 2)	- Same as DTC P0340	Comes on	DTC stored	ES-192
P0351	Ignition Coil "A" Primary / Secondary Circuit	- Ignition system - Open or short in IGF1 or IGT circuit (1 to 6) between ignition coil with igniter and ECM - No. 1 to No. 6 ignition coils with igniters - ECM	Comes on	DTC stored	ES-199
P0352	Ignition Coil "B" Primary / Secondary Circuit	- Same as DTC P0351	Comes on	DTC stored	ES-199
P0353	Ignition Coil "C" Primary / Secondary Circuit	- Same as DTC P0351	Comes on	DTC stored	ES-199
P0354	Ignition Coil "D" Primary / Secondary Circuit	- Same as DTC P0351	Comes on	DTC stored	ES-199
P0355	Ignition Coil "E" Primary / Secondary Circuit	- Same as DTC P0351	Comes on	DTC stored	ES-199
P0356	Ignition Coil "F" Primary / Secondary Circuit	- Same as DTC P0351	Comes on	DTC stored	ES-199
P0420	Catalyst System Efficiency Below Threshold (Bank 1)	- Gas leakage from exhaust system - A/F sensor (bank 1 sensor 1) - HO2 sensor (bank 1 sensor 2) - Exhaust manifold (TWC)	Comes on	DTC stored	ES-210
P0430	Catalyst System Efficiency Below Threshold (Bank 2)	- Gas leakage from exhaust system - A/F sensor (bank 2 sensor 1) - HO2 sensor (bank 2 sensor 2) - Exhaust manifold (TWC)	Comes on	DTC stored	ES-210
P043E	Evaporative Emission System Reference Orifice Clog Up	- Canister pump module (Reference orifice, leak detection pump, vent valve) - Connector/wire harness (Canister pump module - ECM) - EVAP system hose (pipe from air inlet port to canister pump module, canister filter, fuel tank vent hose) - ECM	Comes on	DTC stored	ES-218
P043F	Evaporative Emission System Reference Orifice High Flow	- Same as DTC P043E	Comes on	DTC stored	ES-218
P0441	Evaporative Emission Control System Incorrect Purge Flow	- Purge VSV - Connector/wire harness (Purge VSV - ECM) - Canister pump module - Leakage from EVAP system - Leakage from EVAP line (Purge VSV - Intake manifold) - ECM	Comes on	DTC stored	ES-223
P0450	Evaporative Emission Control System Pressure Sensor / Switch	- Canister pump module - EVAP system hose (pipe from air inlet port to canister pump module, canister filter, fuel tank vent hose) - ECM	Comes on	DTC stored	ES-230
P0451	Evaporative Emission Control System Pressure Sensor Range / Performance	- Canister pump module - Connector/wire harness (Canister pump module - ECM) - EVAP system hose (pipe from air inlet port to canister pump module, canister filter, fuel tank vent hose) - ECM	Comes on	DTC stored	ES-230
P0452	Evaporative Emission Control System Pressure Sensor / Switch Low Input	- Same as DTC P0451	Comes on	DTC stored	ES-230
P0453	Evaporative Emission Control System Pressure Sensor / Switch High Input	- Same as DTC P0451	Comes on	DTC stored	ES-230

DTC No.	Detection Item	Trouble Areas	MIL	Memory	See page
P0455	Evaporative Emission Control System Leak Detected (Gross Leak)	- Fuel cap (loose) - Leakage from EVAP line (Canister - Fuel tank) - Leakage from EVAP line (Purge VSV - Canister) - Canister pump module - Leakage from fuel tank - Leakage from canister	Comes on	DTC stored	ES-239
P0456	Evaporative Emission Control System Leak Detected (Very Small Leak)	- Same as DTC P0455	Comes on	DTC stored	ES-239
P0500	Vehicle Speed Sensor "A"	- Open or short in speed signal circuit - Vehicle speed sensor - Combination meter - ECM - Skid control ECU	Comes on	DTC stored	ES-243
P0504	Brake Switch "A" / "B" Correlation	- Short in stop light switch signal circuit - STOP fuse - Stop light switch - ECM	-	DTC stored	ES-247
P0505	Idle Control System Malfunction	- ETCS - Air induction system - PCV hose connections - ECM	Comes on	DTC stored	ES-251
P050A	Cold Start Idle Air Control System Performance	- Throttle body assembly - MAF meter - Air induction system - PCV hose connections - VVT system - Air cleaner filter element - ECM	Comes on	DTC stored	ES-255
P050B	Cold Start Ignition Timing Performance	- Same as DTC P050A	Comes on	DTC stored	ES-255
P0560	System Voltage	- Open in back up power source circuit - EFI fuse - ECM	Comes on	DTC stored	ES-261
P0604	Internal Control Module Random Access Memory (RAM) Error	- ECM	Comes on	DTC stored	ES-265
P0606	ECM / PCM Processor	- ECM	Comes on	DTC stored	ES-265
P0607	Control Module Performance	- ECM	Comes on	DTC stored	ES-265
P0617	Starter Relay Circuit High	- Park/Neutral Position (PNP) switch (A/T) - Clutch start switch (M/T) - Starter relay circuit - Ignition switch - ECM	Comes on	DTC stored	ES-267
P0630	VIN not Programmed or Mismatch - ECM / PCM	- ECM	Comes on	DTC stored	ES-273
P0657	Actuator Supply Voltage Circuit / Open	- ECM	Comes on	DTC stored	ES-265
P0724	Brake Switch "B" Circuit High	- Short in stop light switch signal circuit - Stop light switch - ECM	Comes on	DTC stored	ES-275
P1500	AC Inverter Malfunction	- Open or short in speed signal circuit - Short between idle-up signal and +B circuits - Voltage Inverter - ECM	Comes on	DTC stored	ES-278
P2102	Throttle Actuator Control Motor Circuit Low	- Open in throttle actuator circuit - Throttle actuator - ECM	Comes on	DTC stored	ES-282

DTC No.	Detection Item	Trouble Areas	MIL	Memory	See page
P2103	Throttle Actuator Control Motor Circuit High	- Short in throttle actuator circuit - Throttle actuator - Throttle valve - Throttle body assembly - ECM	Comes on	DTC stored	ES-282
P2111	Throttle Actuator Control System - Stuck Open	- Throttle actuator - Throttle body assembly - Throttle valve	Comes on	DTC stored	ES-286
P2112	Throttle Actuator Control System - Stuck Closed	- Same as DTC P2111	Comes on	DTC stored	ES-286
P2118	Throttle Actuator Control Motor Current Range / Performance	- Open in ETCS power source circuit - ETCS fuse - ECM	Comes on	DTC stored	ES-289
P2119	Throttle Actuator Control Throttle Body Range / Performance	- ETCS - ECM	Comes on	DTC stored	ES-293
P2120	Throttle / Pedal Position Sensor / Switch "D" Circuit	- Accelerator Pedal Position (APP) sensor - ECM	Comes on	DTC stored	ES-296
P2121	Throttle / Pedal Position Sensor / Switch "D" Circuit Range / Performance	- APP sensor - ECM	Comes on	DTC stored	ES-304
P2122	Throttle / Pedal Position Sensor / Switch "D" Circuit Low Input	- APP sensor - Open in VCP1 circuit - Open or ground short in VPA circuit - ECM	Comes on	DTC stored	ES-296
P2123	Throttle / Pedal Position Sensor / Switch "D" Circuit High Input	- APP sensor - Open in EPA circuit - ECM	Comes on	DTC stored	ES-296
P2125	Throttle / Pedal Position Sensor / Switch "E" Circuit	- APP sensor - ECM	Comes on	DTC stored	ES-296
P2127	Throttle / Pedal Position Sensor / Switch "E" Circuit Low Input	- APP sensor - Open in VCP2 circuit - Open or ground short in VPA2 circuit - ECM	Comes on	DTC stored	ES-296
P2128	Throttle / Pedal Position Sensor / Switch "E" Circuit High Input	- APP sensor - Open in EPA2 circuit - ECM	Comes on	DTC stored	ES-296
P2135	Throttle / Pedal Position Sensor / Switch "A" / "B" Voltage Correlation	- Short between VTA1 and VTA2 circuits - TP sensor (built into throttle body) - ECM	Comes on	DTC stored	ES-117
P2138	Throttle / Pedal Position Sensor / Switch "D" / "E" Voltage Correlation	- Short between VPA and VPA2 circuits - APP sensor - ECM	Comes on	DTC stored	ES-296
P2195	Oxygen (A/F) Sensor Signal Stuck Lean (Bank 1 Sensor 1)	- Open or short in A/F sensor (bank 1 sensor 1) circuit - A/F sensor (bank 1 sensor 1) - A/F sensor heater (bank 1 sensor 1) - A/F sensor heater relay - A/F sensor heater and relay circuits - Air induction system - Fuel pressure - Injector - ECM	Comes on	DTC stored	ES-307
P2196	Oxygen (A/F) Sensor Signal Stuck Rich (Bank 1 Sensor 1)	- Same as DTC P2195	Comes on	DTC stored	ES-307

DTC No.	Detection Item	Trouble Areas	MIL	Memory	See page
P2197	Oxygen (A/F) Sensor Signal Stuck Lean (Bank 2 Sensor 1)	- Open or short in A/F sensor (bank 2 sensor 1) circuit - A/F sensor (bank 2 sensor 1) - A/F sensor heater (bank 2 sensor 1) - A/F sensor heater relay - A/F sensor heater and relay circuits - Air induction system - Fuel pressure - Injector - ECM	Comes on	DTC stored	ES-307
P2198	Oxygen (A/F) Sensor Signal Stuck Rich (Bank 2 Sensor 1)	- Same as DTC P2197	Comes on	DTC stored	ES-307
P2238	Oxygen (A/F) Sensor Pumping Current Circuit Low (Bank 1 Sensor 1)	- Open or short in A/F sensor (bank 1 sensor 1) circuit - A/F sensor (bank 1 sensor 1) - A/F sensor heater - A/F sensor heater relay - A/F sensor heater and relay circuits - ECM	Comes on	DTC stored	ES-324
P2239	Oxygen (A/F) Sensor Pumping Current Circuit High (Bank 1 Sensor 1)	- Same as DTC P2238	Comes on	DTC stored	ES-324
P2241	Oxygen (A/F) Sensor Pumping Current Circuit Low (Bank 2 Sensor 1)	- Open or short in A/F sensor (bank 2 sensor 1) circuit - A/F sensor (bank 2 sensor 1) - A/F sensor heater - A/F sensor heater relay - A/F sensor heater and relay circuits - ECM	Comes on	DTC stored	ES-324
P2242	Oxygen (A/F) Sensor Pumping Current Circuit High (Bank 2 Sensor 1)	- Same as DTC P2241	Comes on	DTC stored	ES-324
P2252	Oxygen (A/F) Sensor Reference Ground Circuit Low (Bank 1 Sensor 1)	- Same as DTC P2238	Comes on	DTC stored	ES-324
P2253	Oxygen (A/F) Sensor Reference Ground Circuit High (Bank 1 Sensor 1)	- Same as DTC P2238	Comes on	DTC stored	ES-324
P2255	Oxygen (A/F) Sensor Reference Ground Circuit Low (Bank 2 Sensor 1)	- Same as DTC P2241	Comes on	DTC stored	ES-324
P2256	Oxygen (A/F) Sensor Reference Ground Circuit High (Bank 2 Sensor 1)	- Same as DTC P2241	Comes on	DTC stored	ES-324
P2401	Evaporative Emission Leak Detection Pump Stuck OFF	- Canister pump module (Reference orifice, leak detection pump, vent valve) - Connector/wire harness (Canister pump module - ECM) - EVAP system hose (pipe from air inlet port to canister pump module, canister filter, fuel tank vent hose) - ECM	Comes on	DTC stored	ES-329
P2402	Evaporative Emission Leak Detection Pump Stuck ON	- Same as DTC P2401	Comes on	DTC stored	ES-329
P2419	Evaporative Emission System Switching Valve Control Circuit Low	- Canister pump module (Reference orifice, leak detection pump, vent valve) - Connector/wire harness (Canister pump module - ECM) - EVAP system hose (pipe from air inlet port to canister pump module, canister filter, fuel tank vent hose) - ECM	Comes on	DTC stored	ES-335

DTC No.	Detection Item	Trouble Areas	MIL	Memory	See page
P2420	Evaporative Emission System Switching Valve Control Circuit High	- Canister pump module (Reference orifice, leak detection pump, vent valve) - Connector/wire harness (Canister pump module - ECM) - ECM	Comes on	DTC stored	ES-335
P2610	ECM / PCM Internal Engine Off Timer Performance	- ECM	Comes on	DTC stored	ES-341
P2A00	A/F Sensor Circuit Slow Response (Bank 1 Sensor 1)	- Open or short in A/F sensor (bank 1 sensor 1) circuit - A/F sensor - A/F sensor heater - ECM	Comes on	DTC stored	ES-343
P2A03	A/F Sensor Circuit Slow Response (Bank 2 Sensor 1)	- Open or short in A/F sensor (bank 2 sensor 1) circuit - A/F sensor - A/F sensor heater - ECM	Comes on	DTC stored	ES-343

DTC	P0010	Camshaft Position "A" Actuator Circuit (Bank 1)

DTC	P0020	Camshaft Position "A" Actuator Circuit (Bank 2)

HINT:
This DTC relates to the Oil Control Valve (OCV).

DESCRIPTION

ES

This DTC is designed to detect opens or shorts in the camshaft oil control valve (OCV) circuit. If the OCV's duty-cycle is excessively high or low while the engine running, the ECM will illuminate the MIL and set the DTC.
The VVT (variable valve timing) system adjusts the intake valve timing to improve the driveability. The engine oil pressure turns the camshaft actuator to adjust the valve timing. The OCV is a solenoid valve and switches the engine oil line. The valve moves when the ECM applies the 12 volts to the solenoid. The ECM changes the energizing time to the solenoid (duty-cycle) in accordance with the camshaft position, crankshaft position,, throttle position etc.

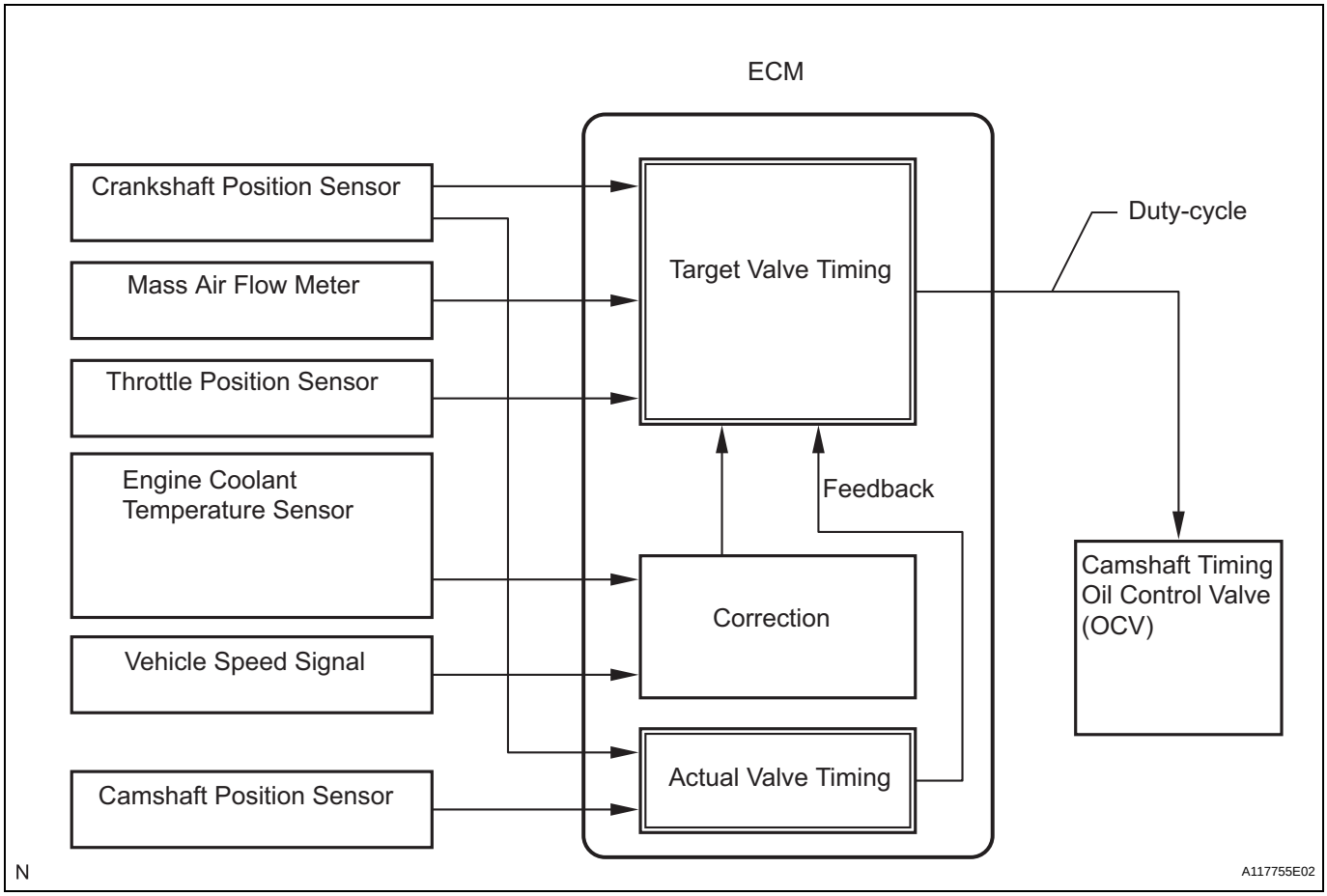

DTC No.	DTC Detection Conditions	Trouble Areas
P0010	Open or short in OCV (bank 1) circuit (1 trip detection logic)	• OCV (bank 1) circuit • OCV (bank 1) • ECM
P0020	Open or short in OCV (bank 2) circuit (1 trip detection logic)	• OCV (bank 2) circuit • OCV (bank 2) • ECM

MONITOR DESCRIPTION

This DTC is designed to detect opens or shorts in the camshaft oil control valve (OCV) circuit. If the OCV's duty-cycle is excessively high or low while the engine running, the ECM will illuminate the MIL and set the DTC.

MONITOR STRATEGY

Related DTCs	P0010: VVT OCV (bank 1) open/short P0020: VVT OCV (bank 2) open/short
Required Sensors/Components (Main)	VVT OCV (Variable Valve Timing Oil Control Valve)
Required Sensors/Components (Related)	-
Frequency of Operation	Continuous
Duration	1 second
MIL Operation	Immediate
Sequence of Operation	None

TYPICAL ENABLING CONDITIONS

Monitor runs whenever following DTCs not present	-
Engine	Running

TYPICAL MALFUNCTION THRESHOLDS

OCV duty-cycle	3% or less
	100%

COMPONENT OPERATING RANGE

OCV duty-cycle	4 to 100 % when engine running

WIRING DIAGRAM

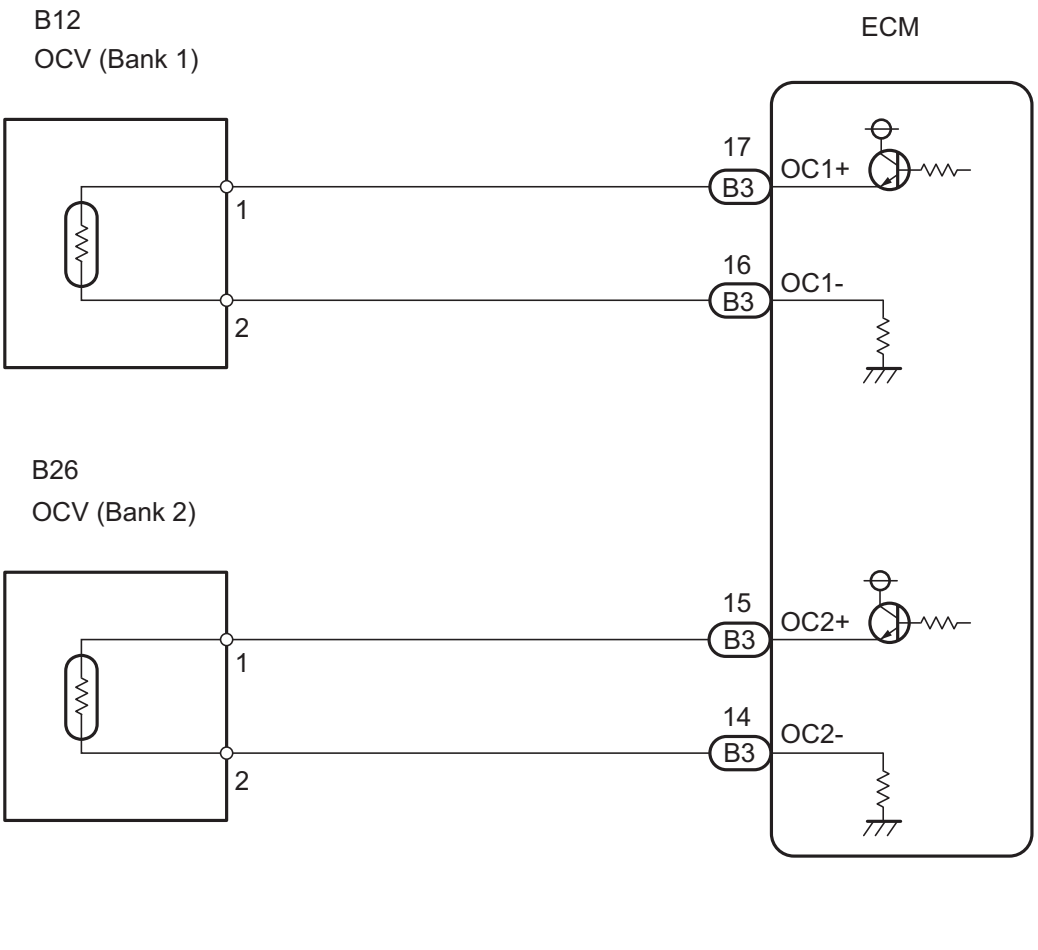

INSPECTION PROCEDURE

1	CHECK FOR DTC

(a) Clear the DTCs after recording the freeze frame data and DTCs.
(b) Allow the engine to idle and check for DTCs.
(c) Check whether P0010 or P0020 is present.

OK:

P0010 or P0020 is present.

NG → **CHECK FOR INTERMITTENT PROBLEMS**

OK

2 CHECK CAMSHAFT TIMING OIL CONTROL VALVE ASSEMBLY

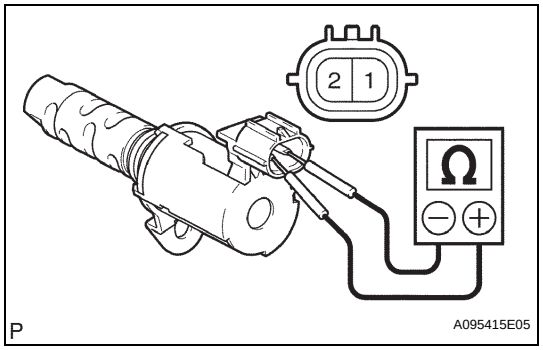

(a) Disconnect the OCV connector.
(b) Measure the resistance between the terminals of the OCV.

Standard Resistance

Tester Connections	Specified Conditions
1 - 2	6.9 to 7.9 Ω at 20°C (68°F)

(c) Reconnect the OCV connector.

NG → **REPLACE CAMSHAFT TIMING OIL CONTROL VALVE ASSEMBLY (See page ES-414)**

OK

3 CHECK HARNESS AND CONNECTOR (OCV - ECM)

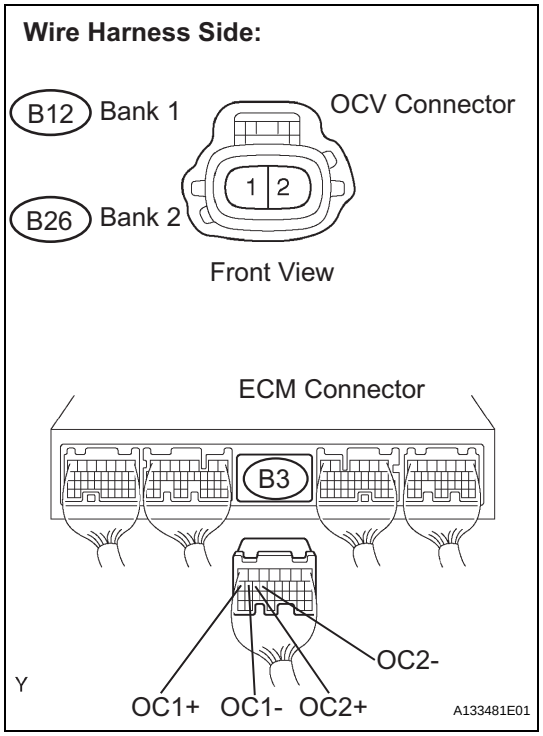

(a) Disconnect the B3 ECM connector.
(b) Disconnect the B12 or B26 OCV connector.
(c) Check the resistance.

Standard Resistance for Bank 1

Tester Connections	Specified Conditions
B12-1 - OC1+ (B3-17)	Below 1 Ω
B12-1 - Body ground	10 kΩ or higher
B12-2 - OC1- (B3-16)	Below 1 Ω
B12-2 - Body ground	10 kΩ or higher

Standard Resistance for Bank 2

Tester Connections	Specified Conditions
B26-1 - OC2+ (B3-15)	Below 1 Ω
B26-1 - Body ground	10 kΩ or higher
B26-2 - OC2- (B3-14)	Below 1 Ω
B26-2 - Body ground	10 kΩ or higher

(d) Reconnect the ECM connector.
(e) Reconnect the OCV connector.

NG → **REPAIR OR REPLACE HARNESS OR CONNECTOR**

OK

REPLACE ECM (See page ES-446)

DTC	P0011	Camshaft Position "A" - Timing Over-Advanced or System Performance (Bank 1)

DTC	P0012	Camshaft Position "A" - Timing Over-Retarded (Bank 1)

DTC	P0021	Camshaft Position "A" - Timing Over-Advanced or System Performance (Bank 2)

DTC	P0022	Camshaft Position "A" - Timing Over-Retarded (Bank 2)

ES

HINT:
If DTC P0011, P0012, P0021 or P0022 is present, check the VVT (Variable Valve Timing) system.

DESCRIPTION

Refer to DTC P0010 (See page ES-67).

DTC No.	DTC Detection Conditions	Trouble Areas
P0011 P0021	Advanced cam timing: With warm engine and engine speed of between 500 rpm and 4,000 rpm, all conditions (a), (b) and (c) met (1 trip detection logic) (a) Difference between target and actual intake valve timings more than 5°CA (Crankshaft Angle) for 4.5 seconds (b) Current intake valve timing fixed (timing changes less than 5°CA in 5 seconds) (c) Variations in VVT controller timing more than 19°CA of maximum delayed timing (malfunction in advance timing)	• Valve timing • Oil control valve (OCV) • OCV filter • Camshaft timing gear assembly • ECM
P0012 P0022	Retarded cam timing: With warm engine and engine speed of between 500 rpm and 4,000 rpm, all conditions (a), (b) and (c) met (2 trip detection logic) (a) Difference between target and actual intake valve timings more than 5°CA (Crankshaft Angle) for 4.5 seconds (b) Current intake valve timing fixed (timing changes less than 5°CA in 5 seconds) (c) Variations in VVT controller timing 19°CA or less of maximum delayed timing (malfunction in retarded timing)	

MONITOR DESCRIPTION

The ECM optimizes the intake valve timing using the VVT (Variable Valve Timing) system to control the intake camshaft. The VVT system includes the ECM, the Oil Control Valve (OCV) and the VVT controller. The ECM sends a target duty-cycle control signal to the OCV. This control signal regulates the oil pressure supplied to the VVT controller. The VVT controller can advance or retard the intake camshaft. If the difference between the target and actual intake valve timings is large, and changes in actual intake valve timing are small, the ECM interprets this as the VVT controller stuck malfunction and sets a DTC.
Example:
A DTC is set when the following conditions 1), 2) and 3) are met:
1) The difference between the target and actual intake valve timings is more than 5°CA (Crankshaft Angle) and the condition continues for more than 4.5 seconds.
2) It takes 5 seconds or more to change the valve timing by 5°CA.
3) After above conditions 1) and 2) are met, the OCV is forcibly activated 63 times or more.
DTCs P0011 and P0021 (Advanced Cam Timing) are subject to 1 trip detection logic.

DTCs P0012 and P0022 (Retarded Cam Timing) are subject to 2 trip detection logic.
These DTCs indicate that the VVT controller cannot operate properly due to OCV malfunctions or the presence of foreign objects in the OCV.
The monitor will not run unless the following conditions are met:

- The engine is warm (the engine coolant temperature is 75°C [167°F] or more).
- The vehicle has been driven at more than 40 mph (64 km/h) for 3 minutes.
- The engine has idled for 3 minutes.

MONITOR STRATEGY

Related DTCs	P0011: Advanced camshaft timing (bank 1) P0012: Retard camshaft timing (bank 1) P0021: Advanced camshaft timing (bank 2) P0022: Retard camshaft timing (bank 2)
Required Sensors/Components (Main)	VVT OCV and VVT Actuator
Required Sensors/Components (Related)	Crankshaft position sensor, Camshaft position sensor and Engine coolant temperature sensor
Frequency of Operation	Once per driving cycle
Duration	Less than 10 seconds
MIL Operation	P0011 and P0021: Immediate P0012 and P0022: 2 driving cycles
Sequence of Operation	None

TYPICAL ENABLING CONDITIONS

Monitor runs whenever following DTCs not present	P0100 - P0103 (MAF sensor) P0115 - P0118 (ECT sensor) P0125 (Insufficient ECT for closed loop) P0335 (CKP sensor) P0340 (CMP sensor) P0351 - P0356 (Igniter)
Battery voltage	11 V or more
Engine RPM	500 to 4,000 rpm
Engine coolant temperature	75 to 100°C (167 to 212°F)

TYPICAL MALFUNCTION THRESHOLDS

All of following conditions are met	-
Deactivation of actual valve timing and target valve timing	More than 5°CA (crankshaft angle)
Valve timing	No change at advanced (retarded) valve timing

If the difference between the target and actual camshaft timings is greater than the specified value, the ECM operates the VVT actuator.
Then, the ECM monitors the camshaft timing change for 5 seconds.

WIRING DIAGRAM

Refer to DTC P0010 (See page ES-69).

INSPECTION PROCEDURE

HINT:

Abnormal bank	Advanced timing over (Valve timing is out of specified range)	Retarded timing over (Valve timing is out of specified range)
Bank 1	P0011	P0012
Bank 2	P0021	P0022

- If DTC P0011 or P0012 is displayed, check the bank 1 VVT system circuit.

- Bank 1 refers to the bank that includes cylinder No. 1.
- If DTC P0021 or P0022 is displayed, check the bank 2 VVT system circuit.
- Bank 2 refers to the bank that does not include cylinder No. 1.
- Read freeze frame data using an intelligent tester. Freeze frame data record the engine condition when malfunctions are detected. When troubleshooting, freeze frame data can help determine if the vehicle was moving or stationary, if the engine was warmed up or not, if the air-fuel ratio was lean or rich, and other data, from the time the malfunction occurred.

1	CHECK ANY OTHER DTCS OUTPUT (IN ADDITION TO DTC P0011, P0012, P0021 OR P0022)

(a) Connect an intelligent tester to the DLC3.
(b) Turn the ignition switch ON and turn the tester ON.
(c) Select the following menu items: DIAGNOSIS / ENHANCED OBD II / DTC INFO / CURRENT CODES.
(d) Read DTCs.

Result

Display (DTC Output)	Proceed to
P0011, P0012, P0021 or P0022	A
P0011, P0012, P0021 or P0022 and other DTCs	B

HINT:
If any DTCs other than P0011, P0012, P0021 or P0022 are output, troubleshoot those DTCs first.

B → **GO TO DTC CHART (See page ES-57)**

A

2	PERFORM ACTIVE TEST USING INTELLIGENT TESTER (OPERATE OCV)

(a) Connect an intelligent tester to the DLC3.
(b) Start the engine and turn the tester ON.
(c) Warm up the engine.
(d) Select the following menu items: DIAGNOSIS / ENHANCED OBD II / ACTIVE TEST / VVT CTRL B1.
(e) Check the engine speed while operating the Oil Control Valve (OCV) using the tester.

OK

Tester Operations	Specified Conditions
OCV OFF	Normal engine speed
OCV ON	Engine idles roughly or stalls (soon after OCV switched from OFF to ON)

NG → **Go to step 4**

OK

3	CHECK WHETHER DTC OUTPUT RECURS (DTC P0011, P0012, P0021 OR P0022)

(a) Connect an intelligent tester to the DLC3.
(b) Turn the ignition switch ON and turn the tester ON.
(c) Clear DTCs (See page ES-38).
(d) Start the engine and warm it up.

(e) Switch the ECM from normal mode to check mode using the tester (See page ES-42).
(f) Drive the vehicle for more than 10 minutes.
(g) Read DTCs using the tester.
OK:
No DTC output.

OK → **END**

NG

4 CHECK VALVE TIMING (CHECK FOR LOOSE AND JUMPED TEETH ON TIMING CHAIN)

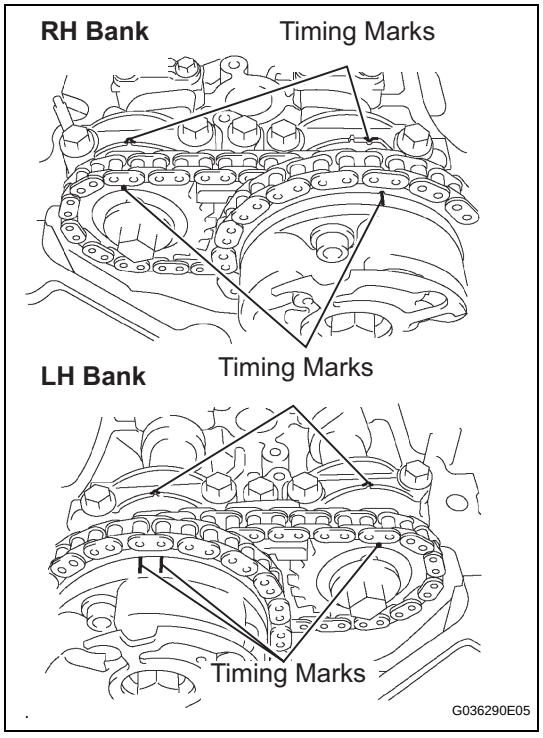

(a) Remove the cylinder head cover (See page EM-25 or EM-25).
(b) Turn the crankshaft pulley, and align its groove with the timing mark "0" of the timing chain cover.
(c) Check that the timing marks of the camshaft timing gears are aligned with the timing marks of the bearing cap as shown in the illustration.
If not, turn the crankshaft 1 revolution (360°), then align the marks as above.
OK:
Timing marks on camshaft timing gears are aligned as shown in the illustration.
(d) Reinstall the cylinder head cover (See page EM-30 or EM-30).

NG → **ADJUST VALVE TIMING**

OK

5 INSPECT CAMSHAFT TIMING OIL CONTROL VALVE ASSEMBLY (OCV)

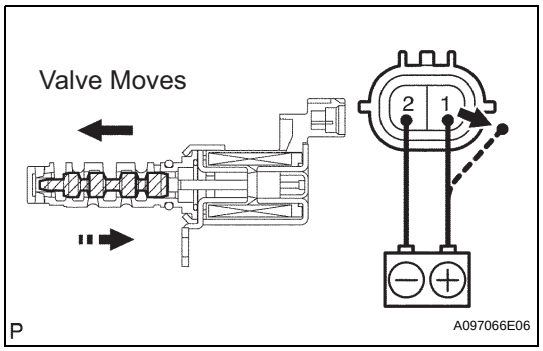

(a) Remove the OCV.
(b) Measure the resistance between the terminals of the OCV.
Standard Resistance

Tester Connections	Specified Conditions
1 - 2	6.9 to 7.9 Ω at 20°C (68°F)

(c) Apply the positive battery voltage to terminal 1 and negative battery voltage to terminal 2. Check the valve operation.
OK:
Valve moves quickly.
(d) Reinstall the OCV.

NG → **REPLACE CAMSHAFT TIMING OIL CONTROL VALVE ASSEMBLY (See page ES-414)**

OK

6	INSPECT OIL CONTROL VALVE FILTER

OK:
Filter is not clogged.

NG → **CLEAN OIL CONTROL VALVE FILTER**

OK

7	REPLACE CAMSHAFT TIMING GEAR ASSEMBLY

NEXT

8	CHECK WHETHER DTC OUTPUT RECURS

(a) Connect an intelligent tester to the DLC3.
(b) Turn the ignition switch ON and turn the tester ON.
(c) Clear DTCs (See page ES-38).
(d) Start the engine and warm it up.
(e) Switch the ECM from normal mode to check mode using the tester (See page ES-42).
(f) Drive the vehicle for more than 10 minutes.
(g) Confirm that no DTC is set using the tester.
OK:
No DTC output.
HINT:
DTC P0011, P0012, P0021 or P0022 is output when foreign objects in engine oil are caught in some parts of the system. These codes will stay registered even if the system returns to normal after a short time. These foreign objects are then captured by the oil filter, thus eliminating the source of the problem.

OK → **SYSTEM OK**

NG

REPLACE ECM (See page ES-446)

DTC	P0016	Crankshaft Position - Camshaft Position Correlation (Bank 1 Sensor A)

DTC	P0018	Crankshaft Position - Camshaft Position Correlation (Bank 2 Sensor A)

DESCRIPTION

Refer to DTC P0335 (See page ES-187).

DTC No.	DTC Detection Conditions	Trouble Areas
P0016	Deviations in crankshaft and camshaft position sensor 1 signals (2 trip detection logic)	• Mechanical system (Timing chain has jumped tooth or chain stretched) • ECM
P0018	Deviations in crankshaft and camshaft position sensor 2 signals (2 trip detection logic)	

ES

MONITOR DESCRIPTION

The ECM optimizes the valve timing by using the VVT (Variable Valve Timing) system to control the intake camshaft. The VVT system includes the ECM, the Oil Control Valve (OCV) and the VVT controller.
The ECM sends a target duty-cycle control signal to the OCV. This control signal regulates the oil pressure supplied to the VVT controller. The VVT controller can advance or retard the intake camshaft.
The ECM calibrates the intake valve timing by setting the intake camshaft to the most retarded angle while the engine is idling. The ECM closes the OCV to retard the cam. The ECM stores this value as the VVT learning value. When the difference between the target and actual intake valve timings is 5°CA (Crankshaft Angle) or less, the ECM stores it.
If the VVT learning value matches the following conditions, the ECM determines the existence of a malfunction in the VVT system, and sets the DTC.

- VVT learning value: Less than 22.5°CA, or more than 45.2°CA.
- Above condition continues for 18 seconds or more.

This DTC indicates that the intake camshaft has been installed toward the crankshaft at an incorrect angle, caused by factors such as the timing chain having jumped a tooth.
This monitor begins to run after the engine has idled for 5 minutes.

MONITOR STRATEGY

Related DTCs	P0016: Camshaft Timing Misalignment at idling
Required Sensors/Components (Main)	VVT actuator
Required Sensors/Components (Related)	Camshaft position sensor, Crankshaft position sensor
Frequency of Operation	Once per driving cycle
Duration	Less than 1 minute
MIL Operation	2 driving cycles
Sequence of Operation	None

TYPICAL ENABLING CONDITIONS

Monitor runs whenever following DTCs not present	P0011 (VVT system 1 - advance) P0012 (VVT system 1 - retard) P0021 (VVT system 2 - advance) P0022 (VVT system 2 - retard) P0115 - P0118 (ECT sensor)
Engine RPM	500 to 1,000 rpm

TYPICAL MALFUNCTION THRESHOLDS

One of following conditions is met	-
VVT learning value at maximum retarded valve timing (Bank 1)	Less than 22.5 °CA (crankshaft angle)
VVT learning value at maximum retarded valve timing (Bank 2)	Less than 22.5 °CA (crankshaft angle)
VVT learning value at maximum retarded valve timing (Bank 1)	More than 45.2 °CA (crankshaft angle)
VVT learning value at maximum retarded valve timing (Bank 2)	More than 45.2 °CA (crankshaft angle)

WIRING DIAGRAM

Refer to DTC P0335 (See page ES-189).
Refer to DTC P0340 (See page ES-195).

ES

INSPECTION PROCEDURE

HINT:
Read freeze frame data using an intelligent tester. Freeze frame data record the engine condition when malfunctions are detected. When troubleshooting, freeze frame data can help determine if the vehicle was moving or stationary, if the engine was warmed up or not, if the air-fuel ratio was lean or rich, and other data, from the time the malfunction occurred.

1	**CHECK VALVE TIMING (CHECK FOR LOOSE AND A JUMPED TOOTH OF TIMING CHAIN) (See page ES-79)**

NG → **ADJUST VALVE TIMING (REPAIR OR REPLACE TIMING CHAIN)**

OK

REPLACE ECM (See page ES-446)

DTC	P0031	Oxygen (A/F) Sensor Heater Control Circuit Low (Bank 1 Sensor 1)

DTC	P0032	Oxygen (A/F) Sensor Heater Control Circuit High (Bank 1 Sensor 1)

DTC	P0051	Oxygen (A/F) Sensor Heater Control Circuit Low (Bank 2 Sensor 1)

DTC	P0052	Oxygen (A/F) Sensor Heater Control Circuit High (Bank 2 Sensor 1)

HINT:
- Although the DTC titles say the oxygen sensor, these DTCs relate to the Air-Fuel Ratio (A/F) sensor.
- Sensor 1 refers to the sensor mounted in front of the Three-Way Catalytic Converter (TWC) and located near the engine assembly.

DESCRIPTION

Refer to DTC P2195 (See page ES-307).

HINT:
- When any of these DTCs are set, the ECM enters fail-safe mode. The ECM turns off the A/F sensor heater in fail-safe mode. Fail-safe mode continues until the ignition switch is turned OFF.
- The ECM provides a pulse width modulated control circuit to adjust the current through the heater. The A/F sensor heater circuit uses a relay on the +B side of the circuit.

Reference (System Diagram of Bank 1 Sensor 1):

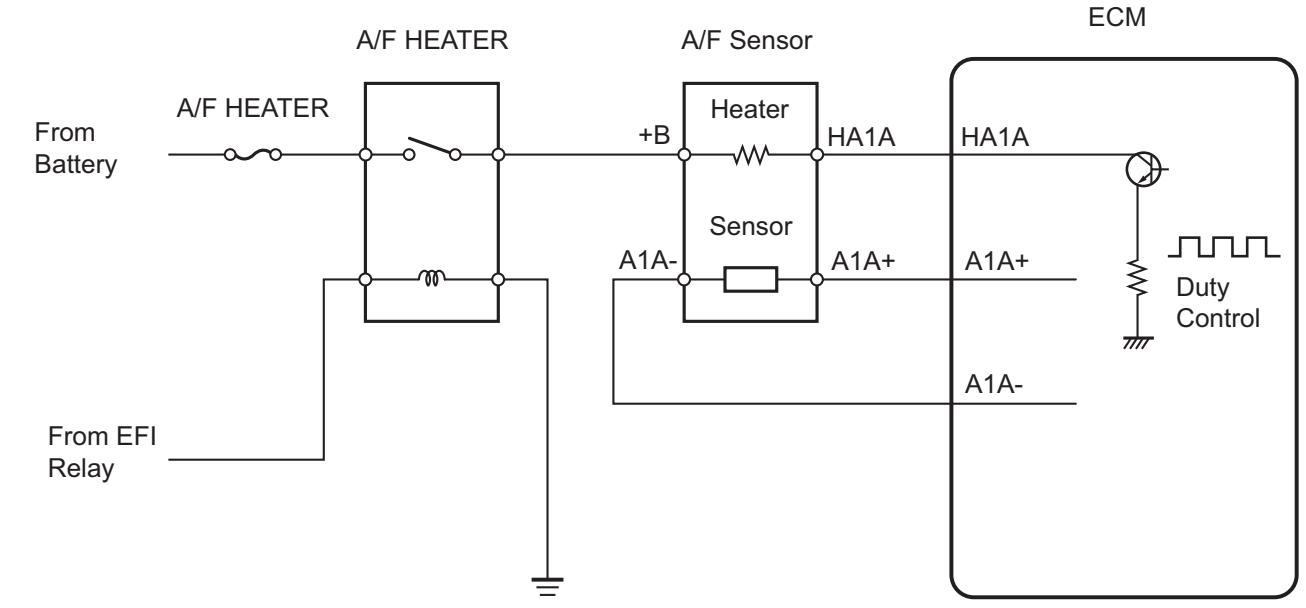

DTC No.	DTC Detection Conditions	Trouble Areas
P0031 P0051	Air-Fuel Ratio (A/F) sensor heater current less than 0.8 A (1 trip detection logic)	• Open in A/F sensor heater circuit • A/F sensor heater • A/F sensor heater relay • ECM

DTC No.	DTC Detection Conditions	Trouble Areas
P0032 P0052	Air-Fuel Ratio (A/F) sensor heater current more than 10 A (1 trip detection logic)	• Short in A/F sensor heater circuit • A/F sensor heater • A/F sensor heater relay • ECM

HINT:
- Bank 1 refers to the bank that includes cylinder No. 1.
- Bank 2 refers to the bank that does not include cylinder No. 1.
- Sensor 1 refers to the sensor closest to the engine assembly.
- Sensor 2 refers to the sensor farthest away from the engine assembly.

MONITOR DESCRIPTION

ES

The ECM uses information from the Air-Fuel Ratio (A/F) sensor to regulate the air-fuel ratio and keep it close to the stoichiometric level. This maximizes the ability of the Three-Way Catalytic Converter (TWC) to purify the exhaust gases.
The A/F sensor detects oxygen levels in the exhaust gas and transmits the information to the ECM. The inner surface of the sensor element is exposed to the outside air. The outer surface of the sensor element is exposed to the exhaust gas. The sensor element is made of platinum coated zirconia and includes an integrated heating element.
The zirconia element generates a small voltage when there is a large difference in the oxygen concentrations between the exhaust gas and outside air. The platinum coating amplifies this voltage generation.
The A/F sensor is more efficient when heated. When the exhaust gas temperature is low, the sensor cannot generate useful voltage signals without supplementary heating. The ECM regulates the supplementary heating using a duty-cycle approach to adjust the average current in the sensor heater element. If the heater current is outside the normal range, the signal transmitted by the A/F sensor will be inaccurate, as a result, the ECM will be unable to regulate air-fuel ratio properly.
When the current in the A/F sensor heater is outside the normal operating range, the ECM interprets this as a malfunction in the sensor heater and sets a DTC.
Example:
The ECM sets DTC P0032 or P0052 when the current in the A/F sensor heater is more than 10 A. Conversely, when the heater current is less than 0.8 A, DTC P0031 or P0051 is set.

MONITOR STRATEGY

Related DTCs	P0031: A/F sensor heater (bank 1) open/short (Low electrical current) P0032: A/F sensor heater (bank 1) open/short (High electrical current) P0051: A/F sensor heater (bank 2) open/short (Low electrical current) P0052: A/F sensor heater (bank 2) open/short (High electrical current)
Required Sensors/Components (Main)	A/F sensor heater (bank 1 and 2)
Required Sensors/Components (Related)	-
Frequency of Operation	Continuous
Duration	10 seconds
MIL Operation	Immediate
Sequence of Operation	None

TYPICAL ENABLING CONDITIONS

All:

Monitor runs whenever following DTCs not present	None

P0031 and P0051:

Battery voltage	10.5 V or more
A/F sensor heater duty-cycle ratio	50 % or more
Time after engine start	10 seconds or more

P0032 and P0052:

Time after engine start	10 seconds or more

TYPICAL MALFUNCTION THRESHOLDS

P0031 and P0051:

A/F sensor heater current	Less than 0.8 A

P0032 and P0052:

A/F sensor heater current	More than 10 A

COMPONENT OPERATING RANGE

A/F sensor heater resistance	1.8 to 3.4 Ω at 20°C (68°F)

ES

WIRING DIAGRAM

Refer to DTC P2195 (See page ES-312).

INSPECTION PROCEDURE

HINT:

Read freeze frame data using an intelligent tester. Freeze frame data record the engine condition when malfunctions are detected. When troubleshooting, freeze frame data can help determine if the vehicle was moving or stationary, if the engine was warmed up or not, if the air-fuel ratio was lean or rich, and other data, from the time the malfunction occurred.

1 INSPECT AIR FUEL RATIO SENSOR (HEATER RESISTANCE)

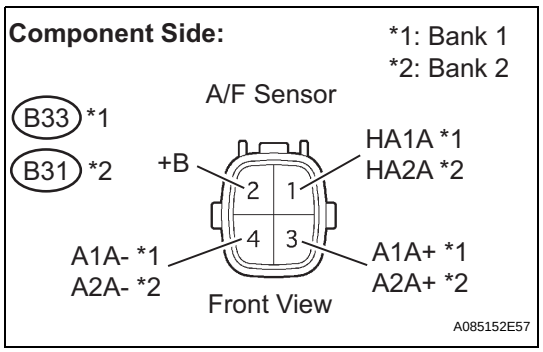

(a) Disconnect the B33*1 or B31*2 A/F sensor connector.
HINT:
- *1: Bank 1 Sensor 1
- *2: Bank 2 Sensor 1

(b) Measure the resistance between the terminals of the A/F sensor connector.

Standard Resistance (Bank 1 Sensor 1)

Tester Connections	Specified Conditions
HA1A (1) - +B (2)	1.8 to 3.4 Ω at 20°C (68°F)
HA1A (1) - A1A- (4)	10 kΩ or higher

Standard Resistance (Bank 2 Sensor 1)

Tester Connections	Specified Conditions
HA2A (1) - +B (2)	1.8 to 3.4 Ω at 20°C (68°F)
HA2A (1) - A2A- (4)	10 kΩ or higher

(c) Reconnect the A/F sensor connector.

NG → **REPLACE AIR FUEL RATIO SENSOR (See page EC-21)**

OK

2 INSPECT AIR FUEL RATIO SENSOR HEATER RELAY

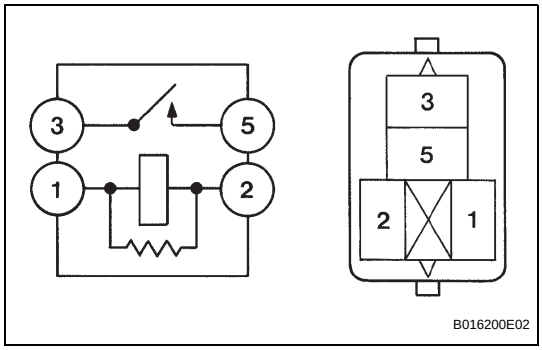

(a) Remove the A/F sensor heater relay from the engine room relay block.
(b) Check the A/F sensor heater relay resistance.
Standard Resistance

Tester Connections	Specified Conditions
3 - 5	10 kΩ or higher
	Below 1 Ω (when battery voltage applied to terminals 1 and 2)

(c) Reinstall the A/F sensor heater relay.

NG → **REPLACE AIR FUEL RATIO SENSOR HEATER RELAY**

OK

3 INSPECT ECM (HA1A OR HA2A VOLTAGE)

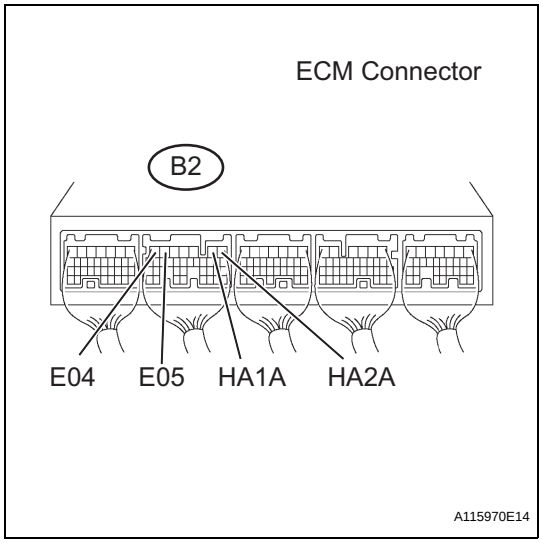

(a) Turn the ignition switch ON.
(b) Measure the voltage between the terminals of the B2 ECM connector.
Standard Voltage

Tester Connections	Specified Conditions
HA1A (B2-2) - E04 (B2-7)	11 to 14 V
HA2A (B2-1) - E05 (B2-6)	

HINT:
- The HA1A means the A/F sensor bank 1 sensor 1.
- The HA2A means the A/F sensor bank 2 sensor 1.

OK → **REPLACE ECM (See page ES-446)**

NG

4	CHECK HARNESS AND CONNECTOR (A/F SENSOR - ECM, A/F SENSOR - A/F SENSOR HEATER RELAY)

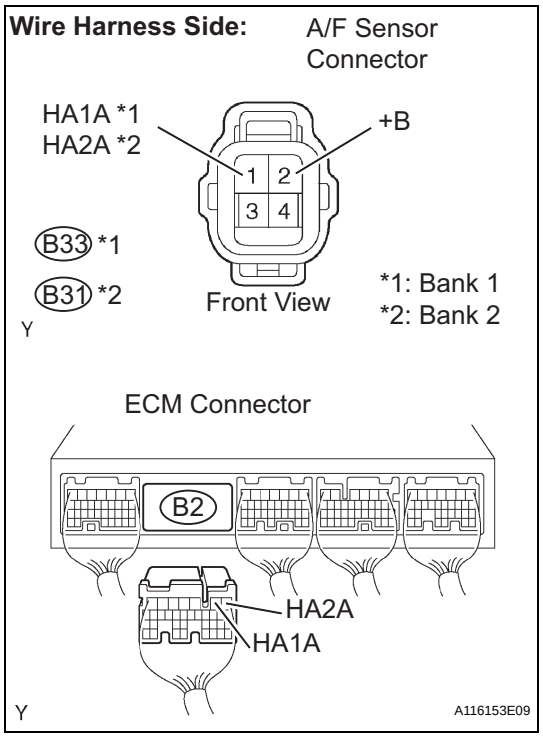

(a) Check the harness and the connector between the ECM and the A/F sensor.
  (1) Disconnect the B33*1 or B31*2 A/F sensor connector.
  HINT:
  - *1: Bank 1 Sensor 1
  - *2: Bank 2 Sensor 1
  (2) Disconnect the B2 ECM connector.
  (3) Check the resistance.

Standard Resistance (Check for open)

Tester Connections	Specified Conditions
HA1A (B33-1) - HA1A (B2-2)	Below 1 Ω
HA2A (B31-1) - HA2A (B2-1)	

Standard Resistance (Check for short)

Tester Connections	Specified Conditions
HA1A (B33-1) or HA1A (B2-2) - Body ground	10 kΩ or higher
HA2A (B31-1) or HA2A (B2-1) - Body ground	

  (4) Reconnect the A/F sensor connector.
  (5) Reconnect the ECM connector.

(b) Check the harness and the connector between the A/F sensor and A/F sensor heater relay.
  (1) Disconnect the B33*1 or B31*2 A/F sensor connector.
  (2) Remove the A/F sensor heater relay from the engine room relay block.
  (3) Check the resistance.

Standard Resistance (Check for open)

Tester Connections	Specified Conditions
+B (B33-2) - A/F sensor heater relay (3)	Below 1 Ω
+B (B31-2) - A/F sensor heater relay (3)	

Standard Resistance (Check for short)

Tester Connections	Specified Conditions
+B (B33-2) or A/F sensor heater relay (3) - Body ground	10 kΩ or higher
+B (B31-2) or A/F sensor heater relay (3) - Body ground	

  (4) Reconnect the A/F sensor connector.
  (5) Reinstall the A/F sensor heater relay.

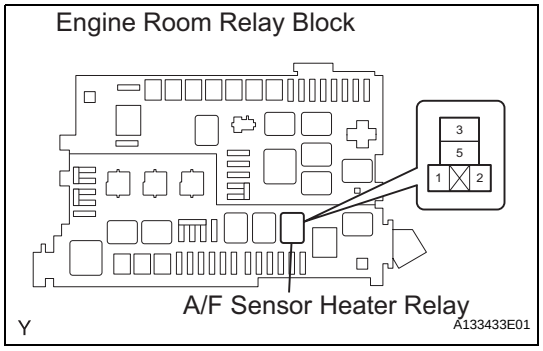

NG → **REPAIR OR REPLACE HARNESS OR CONNECTOR**

OK

REPLACE ECM (See page ES-446)

DTC	P0037	Oxygen Sensor Heater Control Circuit Low (Bank 1 Sensor 2)
DTC	P0038	Oxygen Sensor Heater Control Circuit High (Bank 1 Sensor 2)
DTC	P0057	Oxygen Sensor Heater Control Circuit Low (Bank 2 Sensor 2)
DTC	P0058	Oxygen Sensor Heater Control Circuit High (Bank 2 Sensor 2)
DTC	P0141	Oxygen Sensor Heater Circuit Malfunction (Bank 1 Sensor 2)
DTC	P0161	Oxygen Sensor Heater Circuit Malfunction (Bank 2 Sensor 2)

ES

HINT:
Sensor 2 refers to the sensor mounted behind the Three-Way Catalytic Converter (TWC) and located far from the engine assembly.

DESCRIPTION

Refer to DTC P0136 (See page ES-133).
HINT:

- When any of these DTCs are set, the ECM enters fail-safe mode. The ECM turns off the Heated Oxygen (HO2) Sensor heater in fail-safe mode. Fail-safe mode continues until the engine switch is turned off.

- The ECM provides a pulse width modulated control circuit to adjust the current through the heater. The HO2 sensor heater circuit uses a relay on the +B side of the circuit.

Reference (System Diagram of Bank 1 Sensor 2):

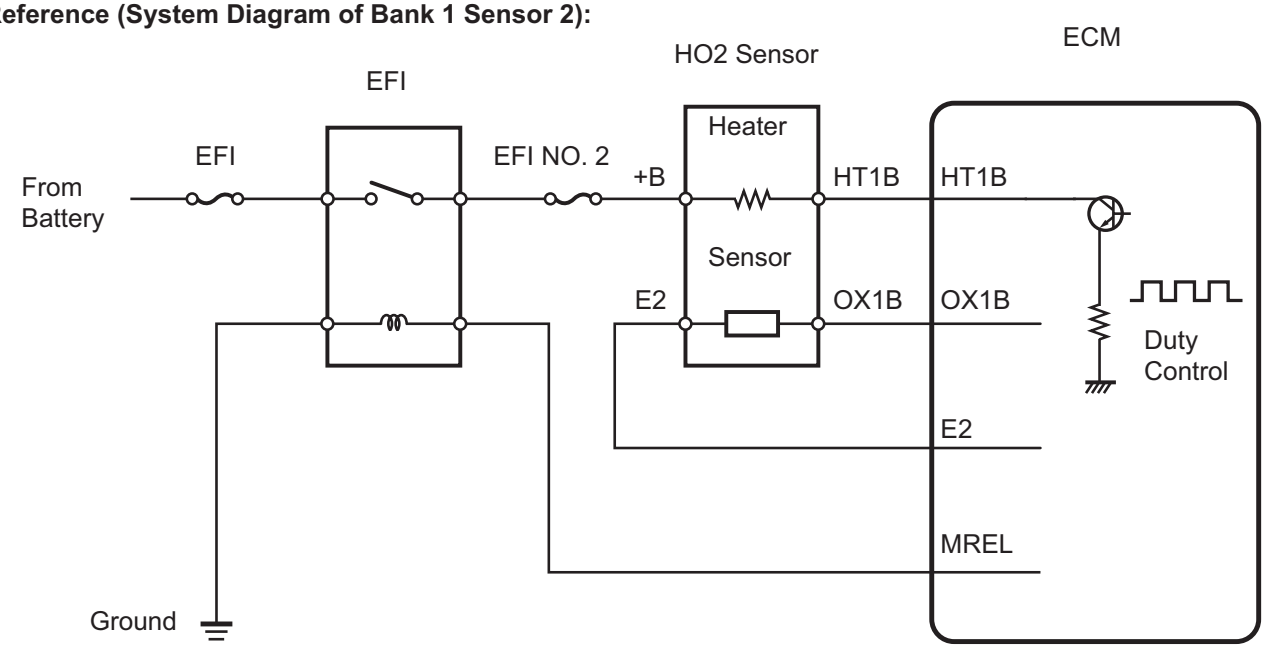

DTC No.	DTC Detection Conditions	Trouble Areas
P0037 P0057	Heated Oxygen (HO2) sensor heater current less than 0.3 A (1 trip detection logic)	• Open in HO2 sensor heater circuit • HO2 sensor heater • EFI relay • ECM
P0038 P0058	Heated Oxygen (HO2) sensor heater current more than 2 A (1 trip detection logic)	• Short in HO2 sensor heater circuit • HO2 sensor heater • EFI relay • ECM
P0141 P0161	Cumulative heater resistance correction value exceeds the acceptable threshold. (2 trip detection logic)	• Open or short in HO2 sensor heater circuit • HO2 sensor heater • EFI relay • ECM

HINT:
- Bank 1 refers to the bank that includes cylinder No. 1.
- Bank 2 refers to the bank that does not include cylinder No. 1.
- Sensor 1 refers to the sensor closest to the engine assembly.
- Sensor 2 refers to the sensor farthest away from the engine assembly.

MONITOR DESCRIPTION

The sensing position of the Heated Oxygen (HO2) sensor has a zirconia element which is used to detect the oxygen concentration in the exhaust gas. If the zirconia element is at the appropriate temperature, and the difference between the oxygen concentrations surrounding the inside and outside surfaces of the sensor is large, the zirconia element generates voltage signals. In order to increase the oxygen concentration detecting capacity of the zirconia element, the ECM supplements the heat from the exhaust with heat from a heating element inside the sensor.

Heated oxygen sensor heater range check (P0037, P0038, P0057 and P0058):

The ECM monitors the current applied to the O2 sensor heater to check the heater for malfunctions. If the current is below the threshold value, the ECM will determine that there is an open circuit in the heater. If the current is above the threshold value, the ECM will determine that there is a short circuit in the heater.

Example:

The ECM sets DTC P0038 or P0058 when the current in the HO2 sensor heater is more than 2 A. Conversely, when the heater current is less than 0.3 A, DTC P0037 or P0057 is set.

Heated oxygen sensor heater performance (P0141 and P0161):

After the accumulated heater ON time exceeds 100 seconds, the ECM calculates the heater resistance using the battery voltage and the current applied to the heater. If the resistance is above the threshold value, the ECM will determine that there is a malfunction in the HO2S heater and set DTC P0141 and P0161.

MONITOR STRATEGY

Related DTCs	P0037: Heated oxygen sensor heater (bank 1 sensor 2) open/short (Low electrical current) P0038: Heated oxygen sensor heater (bank 1 sensor 2) open/short (High electrical current) P0057: Heated oxygen sensor heater (bank 2 sensor 2) open/short (Low electrical current) P0058: Heated oxygen sensor heater (bank 2 sensor 2) open/short (High electrical current) P0141: Heated oxygen sensor heater performance (bank 1 sensor 2) P0161: Heated oxygen sensor heater performance (bank 2 sensor 2)
Required sensors / components (Main)	Heated oxygen sensor heater (bank 1 sensor 2) Heated oxygen sensor heater (bank 2 sensor 2)
Required sensors / components (Sub)	-
Frequency of operation	Continuous: P0037, P0038, P0057, P0058 Once per driving cycle: P0141, P0161
Duration	0.5 seconds: P0037, P0057 Within 1 second: P0038, P0058 10 seconds: P0141 and P0161
MIL operation	Immediate: P0037, P0038, P0057 and P0058 2 driving cycles: P0141 and P0161
Sequence of operation	None

TYPICAL ENABLING CONDITIONS

All:

Monitor runs whenever following DTCs are not present	None

P0037 and P0057:

Battery voltage	10.5 to 20 V

P0038 and P0058 (Case 1):

Battery voltage	10.5 V or more
Engine	Running
Starter	OFF

P0038 and P0058 (Case 2):

Battery voltage	10.5 to 20 V

P0141 and P0161:

One of the following conditions is met:	Condition A or B
A. All of the following conditions are met:	Condition 1, 2, 3, 4 and 5
1. Battery voltage	10.5 V or more
2. Fuel cut	OFF
3. Time after fuel cut ON to OFF	30 seconds or more
4. Accumulated heater ON time	100 seconds or more
5. Learned heater OFF current operation	Completed
B. Duration that rear heated oxygen sensor impedance is less than 15 kΩ	2 seconds or more

TYPICAL MALFUNCTION THRESHOLDS

P0037 and P0057:

Heater current	Less than 0.3 A

P0038 and P0058:

One of the following conditions is met:	Condition A or B
A. Learned heater OFF current	More than 2 A
B. Heater current	2 A or more

P0141 and P0161 (Heater performance monitor check):

Accumulated heater resistance	Varies with sensor element temperature (Example: More than 23 ohm)

COMPONENT OPERATING RANGE

Heated Oxygen (HO2) sensor heater current	0.4 to 1 A (when engine idles, HO2 sensor warmed up and battery voltage 11 to 14 V)

MONITOR RESULT

Refer to CHECKING MONITOR STATUS (See page ES-20).

WIRING DIAGRAM

Refer to DTC P0136 (See page ES-140).

INSPECTION PROCEDURE

HINT:

Read freeze frame data using an intelligent tester. The ECM records vehicle and driving condition information as freeze frame data the moment a DTC is stored. When troubleshooting, freeze frame data can be helpful in determining whether the vehicle was running or stopped, whether the engine was warmed up or not, whether the air/fuel ratio was lean or rich, as well as other data recorded at the time of a malfunction.

1	INSPECT HEATED OXYGEN SENSOR (HEATER RESISTANCE)

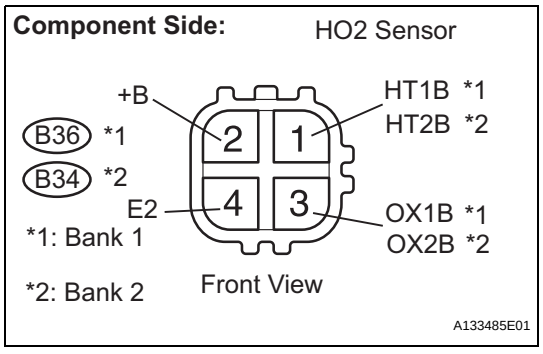

(a) Disconnect the B36*1 or B34*2 Heated Oxygen (HO2) sensor connectors.
HINT:
- *1: Bank 1 Sensor 2
- *2: Bank 2 Sensor 2

(b) Measure the resistance between the terminals of the HO2 sensor connector.

Standard Resistance (Bank 1 Sensor 2)

Tester Connections	Specified Conditions
HT1B (1) - +B (2)	11 to 16 Ω at 20°C (68°F)
HT1B (1) - E2 (4)	10 kΩ or higher

Standard Resistance (Bank 2 Sensor 2)

Tester Connections	Specified Conditions
HT2B (1) - +B (2)	11 to 16 Ω at 20°C (68°F)
HT2B (1) - E2 (4)	10 kΩ or higher

(c) Reconnect the HO2 sensor connector.

NG → REPLACE HEATED OXYGEN SENSOR (See page EC-24)

OK

2 INSPECT EFI RELAY

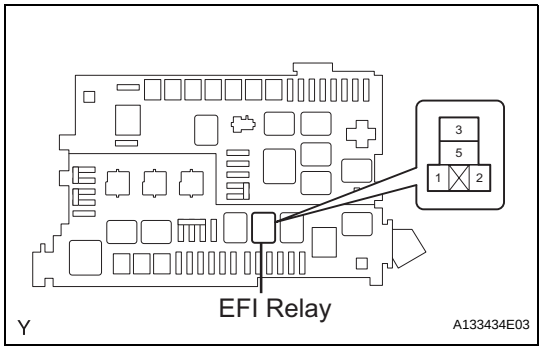

(a) Remove the EFI relay from the engine room relay block.
(b) Check the EFI relay resistance.
Standard Resistance

Terminal Connections	Specified Conditions
3 - 5	10 kΩ or higher
	Below 1 Ω (when battery voltage applied to terminals 1 and 2)

(c) Reinstall the EFI relay.

NG → REPLACE EFI RELAY

OK

3 INSPECT ECM (HT1B OR HT2B VOLTAGE)

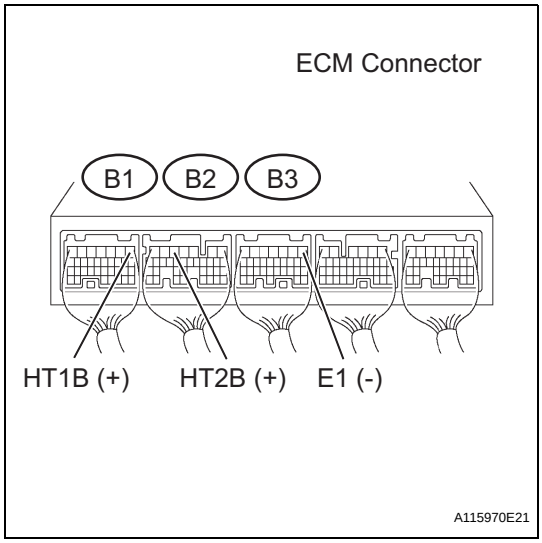

(a) Turn the ignition switch ON.
(b) Measure the voltage between the terminals of the ECM connectors.
Standard Resistance

Terminal Connections	Specified Conditions
HT1B (B1-1) - E1 (B3-1)	11 to 14 V
HT2B (B2-5) - E1 (B3-1)	

HINT:
- The HT1B means the heated oxygen sensor bank 1 sensor 2.
- The HT2B means the heated oxygen sensor bank 2 sensor 2.

OK → REPLACE ECM (See page ES-446)

NG

4	CHECK HARNESS AND CONNECTOR (HEATED OXYGEN SENSOR - EFI NO. 2 FUSE)

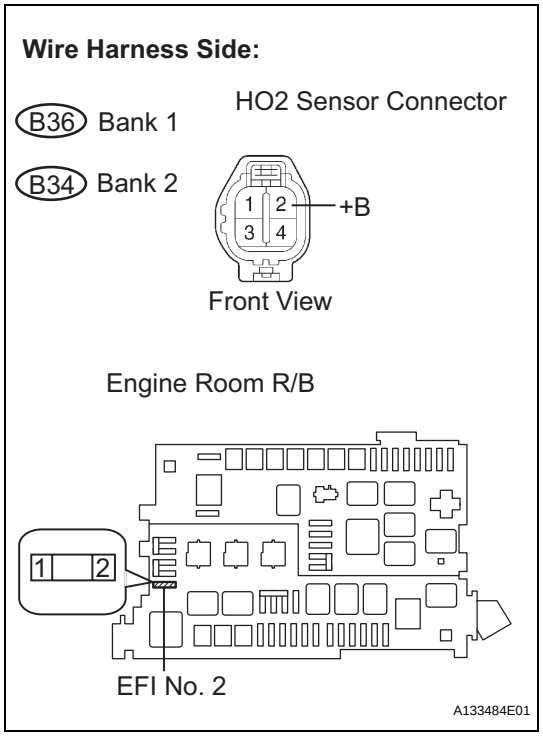

(a) Check the harness and connector between the HO2 sensor and EFI No. 2 fuse.
  (1) Disconnect the B36*1 or B34*2 HO2 sensor connector.
  HINT:
  - *1: Bank 1 Sensor 2
  - *2: Bank 2 Sensor 2
  (2) Remove the EFI No. 2 fuse from the engine room R/B.
  (3) Check the resistance.

Standard Resistance

Terminal Connections	Specified Conditions
+B (B36-2) - EFI No. 2 fuse (2)	Below 1 Ω
+B (B34-2) - EFI No. 2 fuse (2)	

Standard Resistance

Terminal Connections	Specified Conditions
+B (B36-2) or EFI No. 2 fuse (2) - Body ground	10 kΩ or higher
+B (B34-2) or EFI No. 2 fuse (2) - Body ground	

  (4) Reconnect the HO2 sensor connector.
  (5) Reconnect the EFI No. 2 fuse.

NG → **REPAIR OR REPLACE HARNESS OR CONNECTOR**

OK

ES

5	CHECK HARNESS AND CONNECTOR (HEATED OXYGEN SENSOR - ECM)

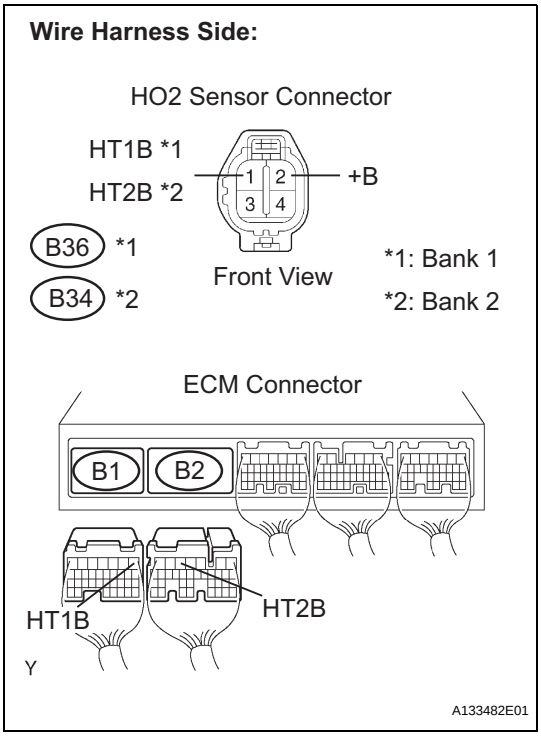

(a) Check the harness and connector between the ECM and HO2 sensor.
  (1) Disconnect the B36*1 or B34*2 HO2 sensor connector.
  HINT:
  - *1: Bank 1 Sensor 2
  - *2: Bank 2 Sensor 2
  (2) Remove the B1 and B2 ECM connector.
  (3) Check the resistance.

Standard Resistance

Terminal Connections	Specified Conditions
HT1B (B36-1) - HT1B (B1-1)	Below 1 Ω
HT2B (B34-1) - HT2B (B2-5)	

Standard Resistance

Terminal Connections	Specified Conditions
HT1B (B36-1) or HT1B (B1-1) - Body ground	10 kΩ or higher
HT2B (B34-1) or HT2B (B2-5) - Body ground	

  (4) Reconnect the HO2 sensor connector.
  (5) Reconnect the ECM connector.

NG → **REPAIR OR REPLACE HARNESS OR CONNECTOR**

OK

REPLACE ECM (See page ES-446)

DTC	P0100	Mass or Volume Air Flow Circuit

DTC	P0102	Mass or Volume Air Flow Circuit Low Input

DTC	P0103	Mass or Volume Air Flow Circuit High Input

DESCRIPTION

The Mass Air Flow (MAF) meter is a sensor that measures the amount of air flowing through the throttle valve.

The ECM uses this information to determine the fuel injection time and to provide appropriate air-fuel ratio.

Inside the MAF meter, there is a heated platinum wire which is exposed to the flow of intake air.

By applying a specific electrical current to the wire, the ECM heats it to a given temperature. The flow of incoming air cools both the wire and an internal thermistor, affecting their resistance. To maintain a constant current value, the ECM varies the voltage applied to these components in the MAF meter. The voltage level is proportional to the airflow through the sensor, and the ECM uses it to calculate the intake air volume.

The circuit is constructed so that the platinum hot wire and the temperature sensor provide a bridge circuit, and the power transistor is controlled so that the potentials of A and B remain equal to maintain the predetermined temperature.

HINT:

When any of these DTCs are set, the ECM enters fail-safe mode. During fail-safe mode, the ignition timing is calculated by the ECM, according to the engine RPM and throttle valve position. Fail-safe mode continues until a pass condition is detected.

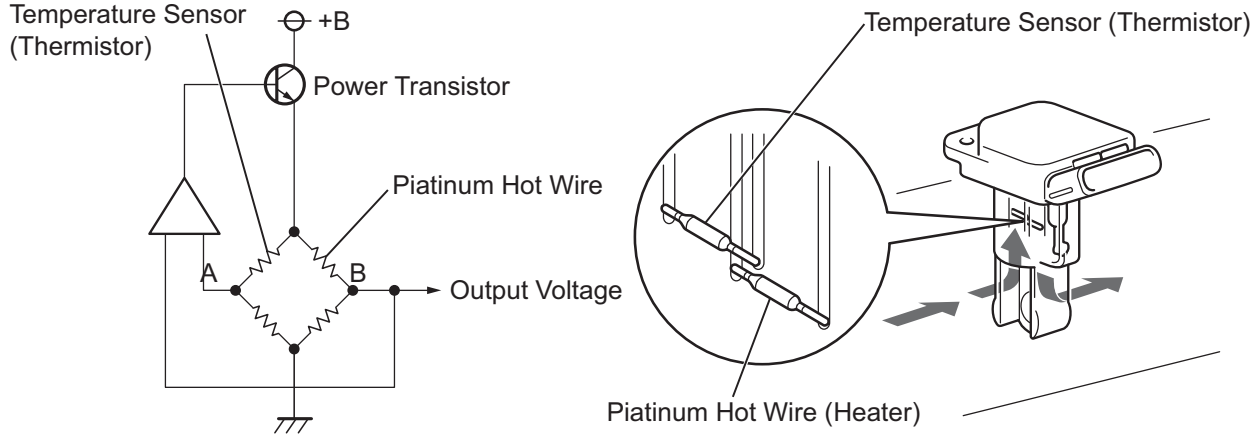

DTC No.	DTC Detection Conditions	Trouble Areas
P0100	Open or short in Mass Air Flow (MAF) meter circuit for 3 seconds (1 trip detection logic)	• Open or short in MAF meter circuit • MAF meter • ECM
P0102	Open in Mass Air Flow (MAF) meter circuit for 3 seconds (1 trip detection logic)	• Open in MAF meter circuit • Short in ground circuit • MAF meter • ECM
P0103	Short in Mass Air Flow (MAF) meter circuit for 3 seconds (1 trip detection logic)	• Short in MAF meter circuit (+B circuit) • MAF meter • ECM

HINT:
When any of these DTCs are set, check the air-flow rate by selecting the following menu items on an intelligent tester: DIAGNOSIS / ENHANCED OBD II / DATA LIST / PRIMARY / MAF.

Mass Air Flow Rate (g/sec)	Malfunctions
Approximately 0.0	• Open in Mass Air Flow (MAF) meter power source circuit • Open or short in VG circuit
271.0 or more	• Open in EVG circuit

MONITOR DESCRIPTION

If there is a defect in the MAF meter or an open or short circuit, the voltage level deviates from the normal operating range. The ECM interprets this deviation as a malfunction in the MAF meter and sets a DTC.
Example:
When the sensor voltage output remains less than 0.2 V, or more than 4.9 V, for more than 3 seconds, the ECM sets a DTC.
If the malfunction is not repaired successfully, a DTC is set 3 seconds after the engine is next started.

MONITOR STRATEGY

Related DTCs	P0100: Mass air flow meter range check (Fluctuating) P0102: Mass air flow meter range check (Low voltage) P0103: Mass air flow meter range check (High voltage)
Required Sensors/Components (Main)	MAF meter
Required Sensors/Components (Related)	Crankshaft position sensor
Frequency of Operation	Continuous
Duration	3 seconds
MIL Operation	Immediate: Engine RPM less than 4,000 rpm 2 driving cycles: Engine RPM 4,000 rpm or more
Sequence of Operation	None

TYPICAL ENABLING CONDITIONS

Monitor runs whenever following DTCs not present	None

TYPICAL MALFUNCTION THRESHOLDS

P0100:

Mass air flow meter voltage	Less than 0.2 V or more than 4.9 V

P0102:

Mass air flow meter voltage	Less than 0.2 V

P0103:

Mass air flow meter voltage	More than 4.9 V

COMPONENT OPERATING RANGE

Mass air flow meter voltage	Between 0.2 V and 4.9 V

WIRING DIAGRAM

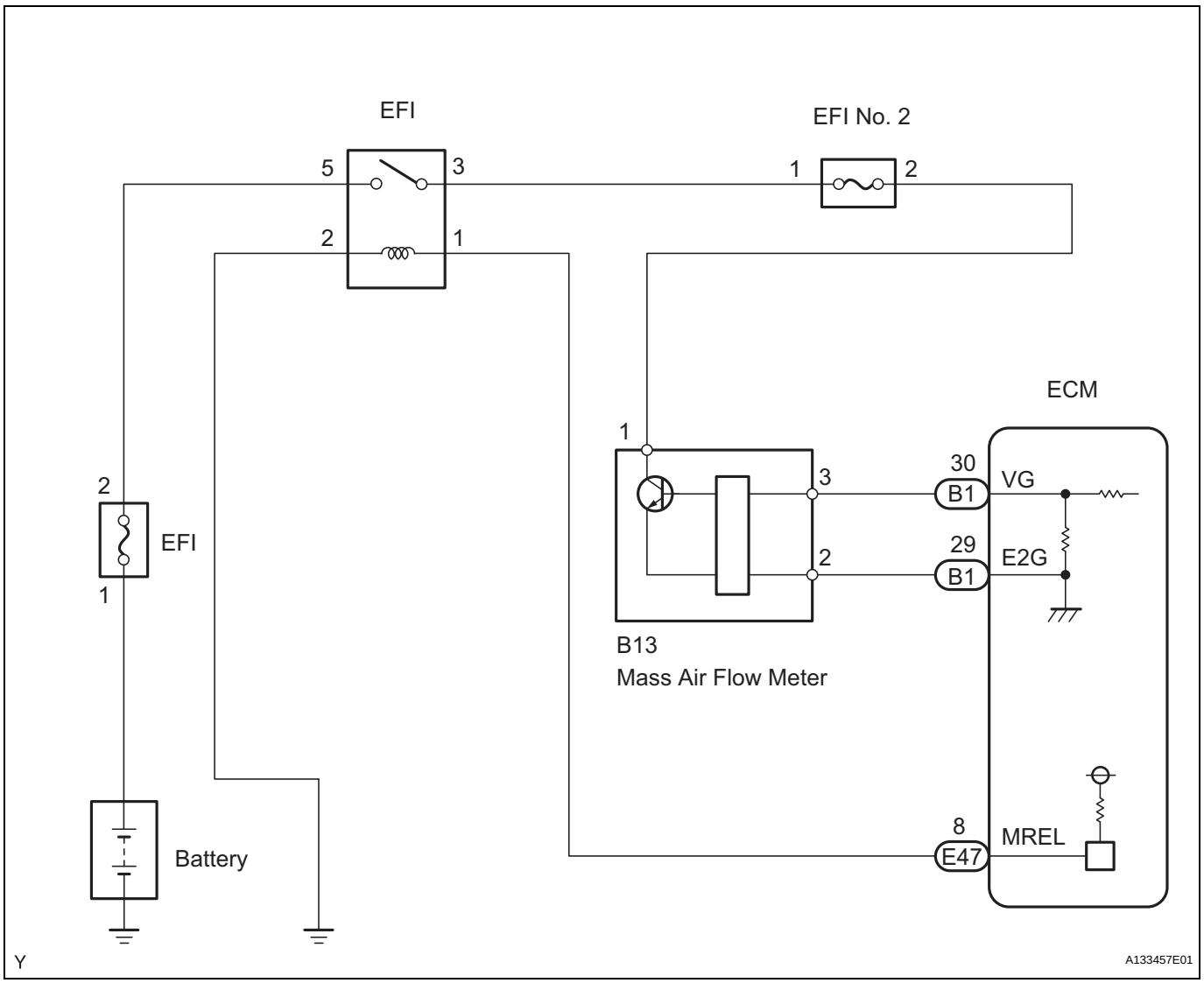

INSPECTION PROCEDURE

HINT:

Read freeze frame data using an intelligent tester. Freeze frame data record the engine condition when malfunctions are detected. When troubleshooting, freeze frame data can help determine if the vehicle was moving or stationary, if the engine was warmed up or not, if the air-fuel ratio was lean or rich, and other data, from the time the malfunction occurred.

1	READ VALUE USING INTELLIGENT TESTER (MASS AIR FLOW RATE)

(a) Connect an intelligent tester to the DLC3.
(b) Start the engine.
(c) Turn the tester ON.
(d) Select the following menu items: DIAGNOSIS / ENHANCED OBD II / DATA LIST / PRIMARY / MAF.
(e) Read the values displayed on the tester.

Result

Mass Air Flow Rate (g/sec)	Proceed to
0.0	A

Mass Air Flow Rate (g/sec)	Proceed to
271.0 or more	B
Between 1.0 and 270.0 (*1)	C

*1: The value must be changed when the throttle valve is open or closed.

B → Go to step 6

C → CHECK FOR INTERMITTENT PROBLEMS

A

ES

2 INSPECT MASS AIR FLOW METER (POWER SOURCE VOLTAGE)

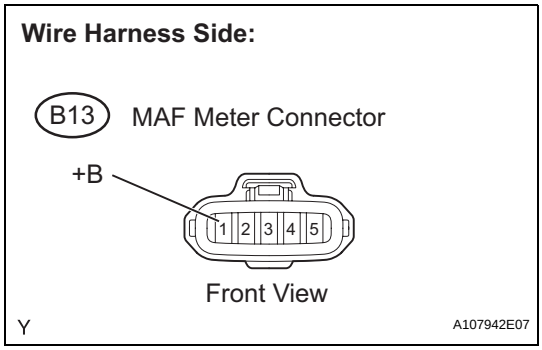

(a) Disconnect the B13 Mass Air Flow (MAF) meter connector.
(b) Turn the ignition switch ON.
(c) Measure the voltage between the terminal of the wire harness side connector and body ground.
Standard Voltage

Tester Connections	Specified Conditions
+B (B13-1) - Body ground	11 to 14 V

(d) Reconnect the MAF meter connector.

NG → Go to step 5

OK

3 INSPECT ECM (VG VOLTAGE)

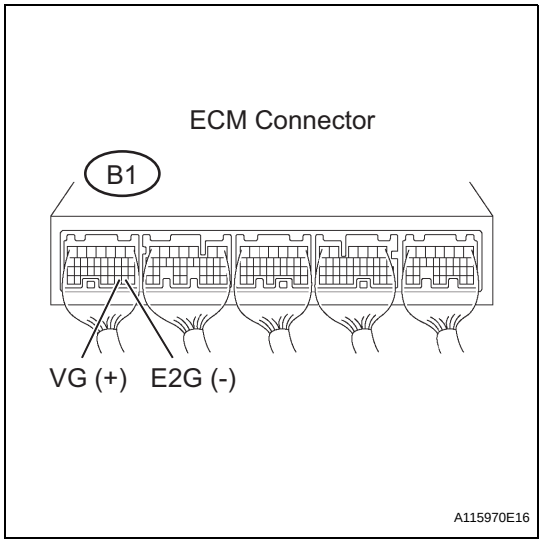

(a) Start the engine.
(b) Measure the voltage between the terminals of the B1 ECM connector.
HINT:
The transmission gear selector lever should be in the P or N position and the A/C switch should be turned OFF.
Standard Voltage

Tester Connections	Conditions	Specified Conditions
VG (B1-30) - E2G (B1-29)	Engine idling	0.5 to 3.0 V

OK → REPLACE ECM (See page ES-446)

NG

4	CHECK HARNESS AND CONNECTOR (MASS AIR FLOW METER - ECM)

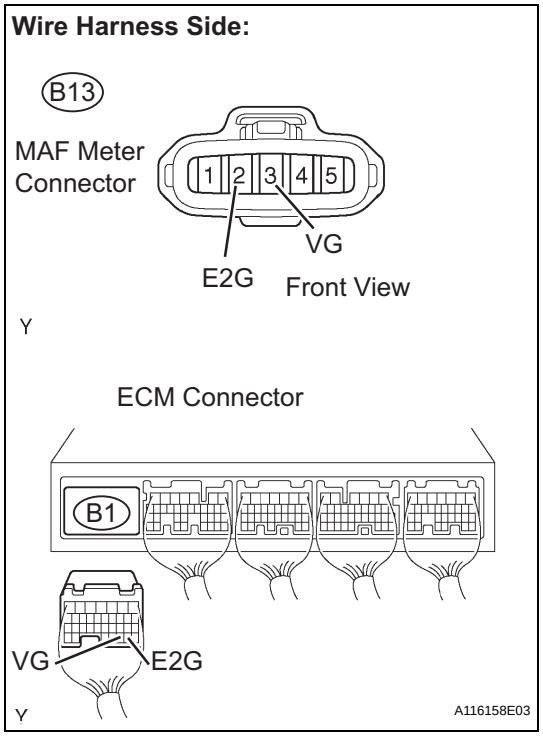

(a) Disconnect the B13 MAF meter connector.
(b) Disconnect the B1 ECM connector.
(c) Check the resistance.

Standard Resistance (Check for open)

Tester Connections	Specified Conditions
VG (B13-3) - VG (B1-30)	Below 1 Ω
E2G (B13-2) - E2G (B1-29)	

Standard Resistance (Check for short)

Tester Connections	Specified Conditions
VG (B13-3) or VG (B1-30) - Body ground	10 kΩ or higher

(d) Reconnect the MAF meter connector.
(e) Reconnect the ECM connector.

NG → **REPAIR OR REPLACE HARNESS OR CONNECTOR**

OK

REPLACE MASS AIR FLOW METER (See page ES-409)

ES

5 CHECK HARNESS AND CONNECTOR (MASS AIR FLOW METER - EFI RELAY)

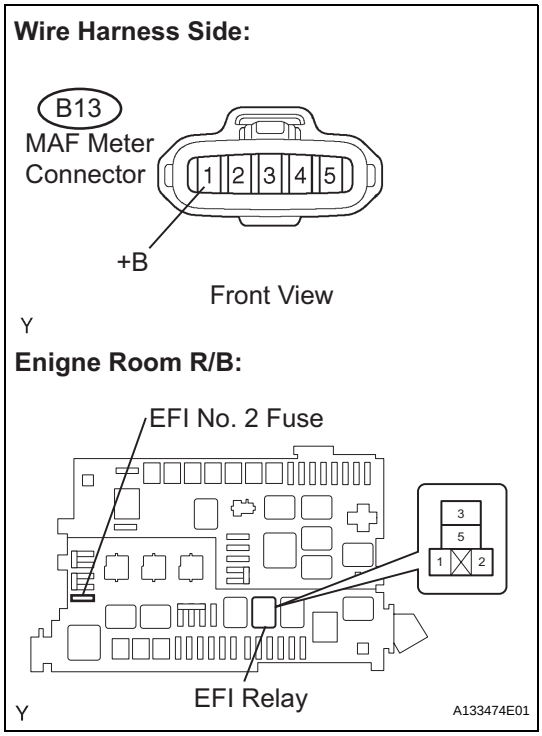

(a) Inspect the EFI NO. 2 fuse.
  (1) Remove the EFI NO. 2 fuse from the engine room relay block.
  (2) Check the EFI NO. 2 fuse resistance.
    Standard Resistance:
    Below 1 Ω
  (3) Reinstall the EFI NO. 2 fuse.
(b) Disconnect the B13 MAF meter connector.
(c) Remove the EFI relay from the engine room relay block.
(d) Check the resistance.

Standard Resistance (Check for open)

Tester Connections	Specified Conditions
+B (B13-1) - EFI relay (3)	Below 1 Ω

Standard Resistance (Check for short)

Tester Connections	Specified Conditions
+B (B13-1) or EFI relay (3) - Body ground	10 kΩ or higher

(e) Reconnect the MAF meter connector.
(f) Reinstall the EFI relay.

NG → **REPAIR OR REPLACE HARNESS OR CONNECTOR**

OK

CHECK ECM POWER SOURCE CIRCUIT

6 INSPECT ECM (SENSOR GROUND)

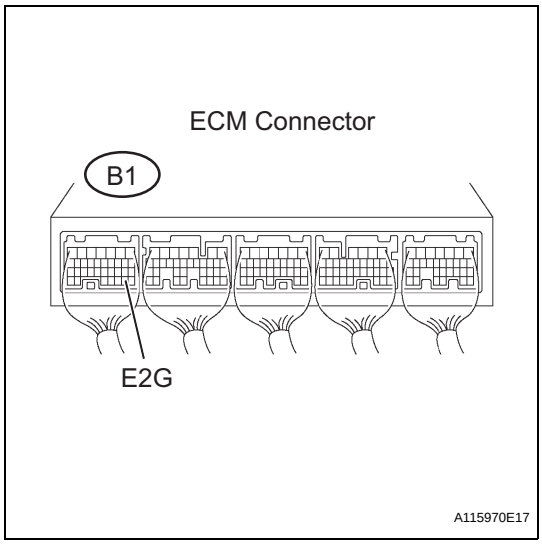

(a) Check the resistance.

Standard Resistance

Tester Connections	Specified Conditions
E2G (B1-29) - Body ground	Below 1 Ω

NG → **REPLACE ECM (See page ES-446)**

OK

7	CHECK HARNESS AND CONNECTOR (MASS AIR FLOW METER - ECM)

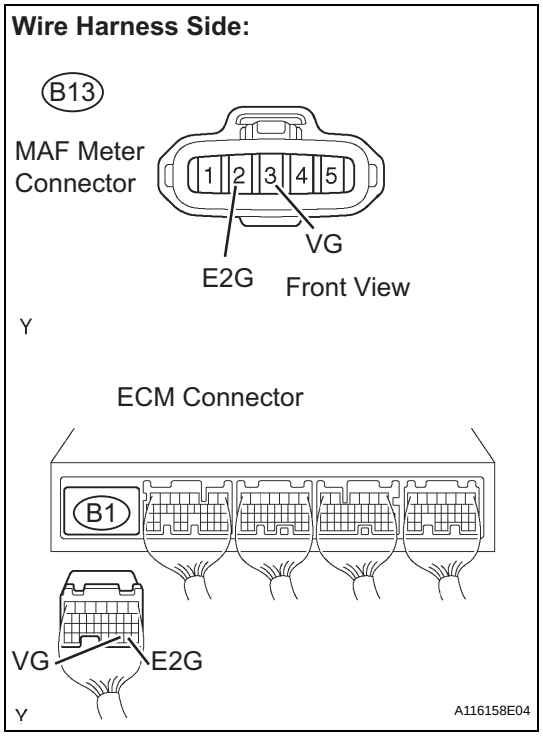

(a) Disconnect the B13 MAF meter connector.
(b) Disconnect the B1 ECM connector.
(c) Check the resistance.

Standard Resistance (Check for open)

Tester Connections	Specified Conditions
VG (B13-3) - VG (B1-30)	Below 1 Ω
E2G (B13-2) - E2G (B1-29)	

Standard Resistance (Check for short)

Tester Connections	Specified Conditions
VG (B13-3) or VG (B1-30) - Body ground	10 kΩ or higher

(d) Reconnect the MAF meter connector.
(e) Reconnect the ECM connector.

NG → **REPAIR OR REPLACE HARNESS OR CONNECTOR**

OK

REPLACE MASS AIR FLOW METER (See page ES-409)

ES

DTC	P0101	Mass Air Flow Circuit Range / Performance Problem

DESCRIPTION

Refer to DTC P0100 (See page ES-90).

DTC No.	DTC Detection Conditions	Trouble Areas
P0101	Conditions (a), (b), (c), (d) and (e) are met (2 trip detection logic): (a) Engine running (b) Engine coolant temperature 70°C (158°F) or higher (c) Throttle Position (TP) sensor voltage 0.4 V or more (d) Average engine load value ratio less than 0.85, or more than 1.17 (varies with estimated engine load) Average engine load value ratio = Average engine load based on MAF meter output / Average engine load estimated from driving conditions (e) Average air-fuel ratio less than -20 %, or more than 20 %	• Mass Air Flow (MAF) meter • Air induction system • PCV hose connections

ES

MONITOR DESCRIPTION

The MAF meter is a sensor that measures the amount of air flowing through the throttle valve. The ECM uses this information to determine the fuel injection time and to provide an appropriate air-fuel ratio. Inside the MAF meter, there is a heated platinum wire which is exposed to the flow of intake air. By applying a specific electrical current to the wire, the ECM heats it to a specific temperature. The flow of incoming air cools both the wire and an internal thermistor, affecting their resistance. To maintain a constant current value, the ECM varies the voltage applied to these components of the MAF meter. The voltage level is proportional to the airflow through the sensor, and the ECM uses it to calculate the intake air volume.
The ECM monitors the average engine load value ratio to check the MAF meter for malfunctions. The average engine load value ratio is obtained by comparing the average engine load calculated from the MAF meter output to the average engine load estimated from the driving conditions, such as the engine speed and the throttle opening angle. If the average engine load value ratio is below the threshold value, the ECM determines that the intake air volume is low, and if the average engine load value ratio is above the threshold value, the ECM determines that the intake air volume is high.
If this is detected in 2 consecutive driving cycles, the MIL is illuminated and a DTC is set.

MONITOR STRATEGY

Related DTCs	P0101: Mass air flow meter rationality
Required Sensors/Components (Main)	Mass air flow meter
Required Sensors/Components (Related)	Crankshaft Position (CKP) sensor, Engine Coolant Temperature (ECT) sensor and Throttle Position (TP) sensor
Frequency of Operation	Continuous
Duration	20 seconds or more
MIL Operation	2 driving cycles
Sequence of Operation	None

TYPICAL ENABLING CONDITIONS

Monitor runs whenever following DTCs not present	P0115 - P0118 (ECT sensor) P0120 - P0223, P2135 (TP sensor) P0125 (Insufficient ECT for closed loop) P0335 (CKP sensor) P0340 (CMP sensor)
Throttle position (TP sensor voltage)	0.4 V or more
Engine	Running
Battery voltage	10.5 V or more

Engine coolant temperature	70°C (158°F) or more
IAT sensor circuit	OK
ECT sensor circuit	OK
CKP sensor circuit	OK
TP sensor circuit	OK
Canister pressure sensor circuit	OK
EVAP leak detection pump	OK
EVAP vent valve	OK

TYPICAL MALFUNCTION THRESHOLDS

Both of following conditions 1 and 2 met	-
1. Averaged engine load value ratio	Less than 0.85, or more than 1.17 (varies with estimated engine load)
2. Averaged air-fuel ratio	Less than -20 %, or more than 20 %

ES

WIRING DIAGRAM

Refer to DTC P0100 (See page ES-92).

CONFIRMATION DRIVING PATTERN

HINT:
Performing this confirmation pattern will activate the mass air flow performance monitor.

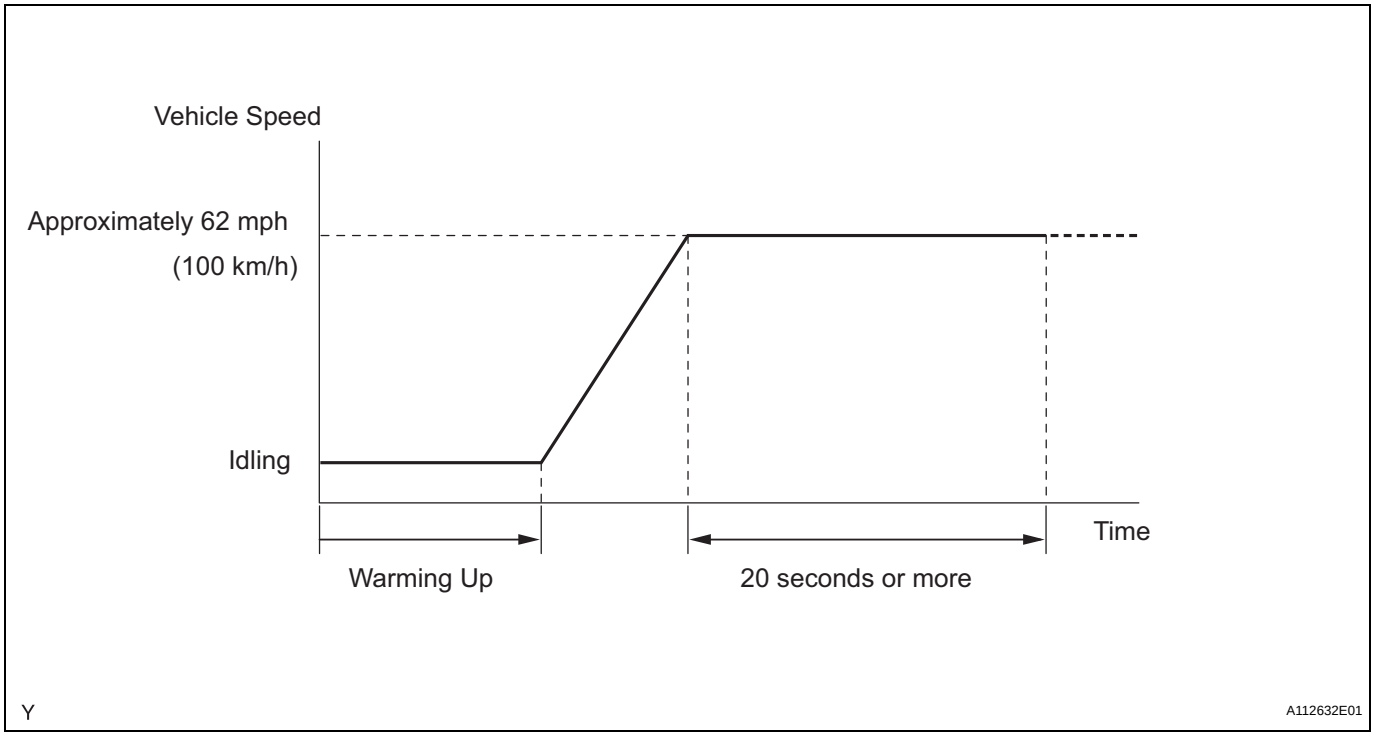

1. Connect the intelligent tester to the DLC3.
2. Turn the ignition switch to ON.
3. Turn the tester ON.
4. Clear DTCs (See page ES-38).
5. Start the engine, and warm it up until the engine coolant temperature reaches 70°C (158°F) or higher.
6. Drive the vehicle at approximately 62 mph (100 km/h) for 20 seconds or more.
7. On the tester, select the following menu items: DIAGNOSIS / ENHANCED OBD II / DTC INFO / PENDING CODES and check if any DTCs (any pending DTCs) are set.

INSPECTION PROCEDURE

HINT:
Read freeze frame data using an intelligent tester. Freeze frame data record the engine condition when malfunctions are detected. When troubleshooting, freeze frame data can help determine if the vehicle was moving or stationary, if the engine was warmed up or not, if the air-fuel ratio was lean or rich, and other data, from the time the malfunction occurred.

1 CHECK ANY OTHER DTCS OUTPUT (IN ADDITION TO DTC P0101)

(a) Connect an intelligent tester to the DLC3.
(b) Turn the ignition switch to ON.
(c) Turn the tester ON.
(d) Select the following menu items: DIAGNOSIS / ENHANCED OBD II / DTC INFO / CURRENT CODES.
(e) Read DTCs.

Result

Display (DTC Output)	Proceed To
P0101	A
P0101 and other DTCs	B

HINT:
If any DTCs other than P0101 are output, troubleshoot those DTCs first.

B → **GO TO DTC CHART**

A

2 CHECK AIR INDUCTION SYSTEM

(a) Check the air induction system for vacuum leakage.
OK:
No leakage from air induction system.

NG → **REPAIR OR REPLACE AIR INDUCTION SYSTEM**

OK

3 CHECK PCV HOSE CONNECTIONS

OK:
PCV hose is connected correctly and is not damaged.

NG → **REPAIR OR REPLACE PCV HOSE**

OK

REPLACE MASS AIR FLOW METER (See page ES-409)

DTC	P0110	Intake Air Temperature Circuit

DTC	P0112	Intake Air Temperature Circuit Low Input

DTC	P0113	Intake Air Temperature Circuit High Input

DESCRIPTION

(Figure 1)

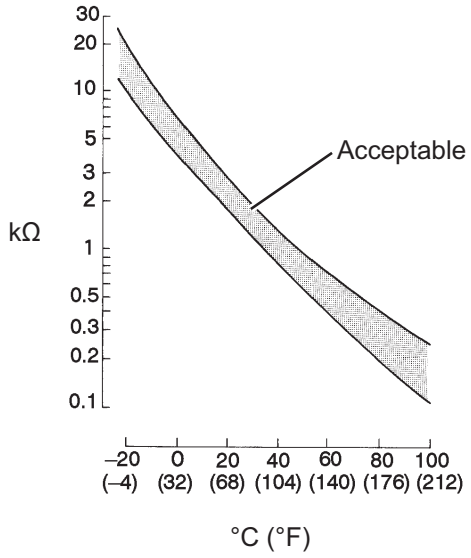

The Intake Air Temperature (IAT) sensor, mounted on the Mass Air Flow (MAF) meter, monitors the IAT. The IAT sensor has a built in thermistor with a resistance that varies according to the temperature of the intake air. When the IAT is low, the resistance of the thermistor increases. When the temperature is high, the resistance drops. These variations in resistance are transmitted to the ECM as voltage changes (see Fig. 1).

The IAT sensor is powered by a 5 V supply from the THA terminal of the ECM, via resistor R.

Resistor R and the IAT sensor are connected in series. When the resistance value of the IAT sensor changes, according to changes in the IAT, the voltage at terminal THA also varies.

Based on this signal, the ECM increases the fuel injection volume when the engine is cold to improve driveability.

HINT:

When any of DTCs P0110, P0112 and P0113 are set, the ECM enters fail-safe mode. During fail-safe mode, the IAT is estimated to be 20°C (68°F) by the ECM. Fail-safe mode continues until a pass condition is detected.

DTC No.	Proceed To	DTC Detection Conditions	Trouble Areas
P0110	Step 1	Open or short in Intake Air Temperature (IAT) sensor circuit for 0.5 seconds (1 trip detection logic)	• Open or short in IAT sensor circuit • IAT sensor (built into MAF meter) • ECM
P0112	Step 4	Short in Intake Air Temperature (IAT) sensor circuit for 0.5 seconds (1 trip detection logic)	• Short in IAT sensor circuit • IAT sensor (built into MAF meter) • ECM
P0113	Step 2	Open in Intake Air Temperature (IAT) sensor circuit for 0.5 seconds (1 trip detection logic)	• Open in IAT sensor circuit • IAT sensor (built into MAF meter) • ECM

HINT:
When any of these DTCs are set, check the IAT by selecting the following menu items on an intelligent tester: DIAGNOSIS / ENHANCED OBD II / DATA LIST / PRIMARY / INTAKE AIR.

Temperature Displayed	Malfunctions
-40°C (-40°F)	Open circuit
140°C (284°F) or higher	Short circuit

MONITOR DESCRIPTION

The ECM monitors the sensor voltage and uses this value to calculate the Intake Air Temperature (IAT). When the sensor output voltage deviates from the normal operating range, the ECM interprets this as a malfunction in the IAT sensor and sets a DTC.

Example:
If the sensor voltage output is more than 4.91 V for 0.5 seconds or more, the ECM determines that there is an open in the IAT sensor circuit, and sets DTC P0113. Conversely, if the voltage output is less than 0.18 V for 0.5 seconds or more, the ECM determines that there is a short in the sensor circuit, and sets DTC P0112.
If the malfunction is not repaired successfully, a DTC is set 0.5 seconds after the engine is next started.

MONITOR STRATEGY

Related DTCs	P0110: Intake air temperature sensor open/short (Fluctuating) P0112: Intake air temperature sensor short (Low voltage) P0113: Intake air temperature sensor open (High voltage)
Required Sensors/Components (Main)	Intake Air Temperature (IAT) sensor
Required sensors/Components (Related)	-
Frequency of Operation	Continuous
Duration	0.5 seconds
MIL Operation	Immediate
Sequence of Operation	None

TYPICAL ENABLING CONDITIONS

Monitor runs whenever following DTCs not present	None

TYPICAL MALFUNCTION THRESHOLDS

P0110:

Intake air temperature sensor voltage	Less than 0.18 V, or more than 4.91 V

P0112:

Intake air temperature sensor voltage	Less than 0.18 V

P0113:

Intake air temperature sensor voltage	More than 4.91 V

COMPONENT OPERATING RANGE

Intake air temperature sensor voltage	0.18 V to 4.91 V

WIRING DIAGRAM

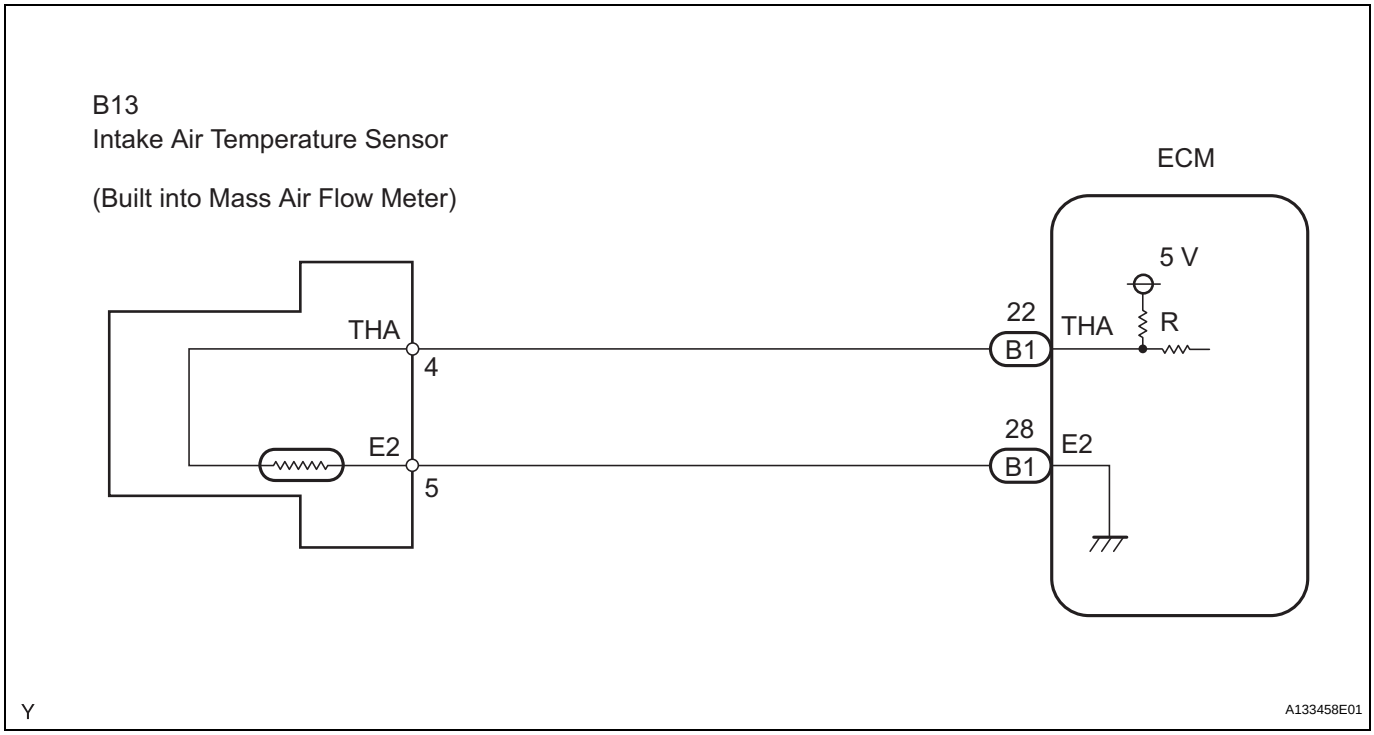

INSPECTION PROCEDURE

HINT:

- If other DTCs relating to different systems that have terminal E2 as the ground terminal are output simultaneously, terminal E2 may have an open circuit.
- Read freeze frame data using an intelligent tester. Freeze frame data record the engine condition when malfunctions are detected. When troubleshooting, freeze frame data can help determine if the vehicle was moving or stationary, if the engine was warmed up or not, if the air-fuel ratio was lean or rich, and other data, from the time the malfunction occurred.

1	READ VALUE USING INTELLIGENT TESTER (INTAKE AIR TEMPERATURE)

(a) Connect an intelligent tester to the DLC3.
(b) Turn the ignition switch ON.
(c) Turn the tester ON.
(d) Select the following menu items: DIAGNOSIS / ENHANCED OBD II / DATA LIST / PRIMARY / INTAKE AIR.
(e) Read the value displayed on the tester.
Standard:
Same as actual Intake Air Temperature (IAT).

Result

Temperature Displayed	Proceed To
-40°C (-40°F)	A
140°C (284°F) or higher	B
Same as actual IAT	C

HINT:

- If there is an open circuit, the intelligent tester indicates -40°C (-40°F).

- If there is a short circuit, the intelligent tester indicates 140°C (284°F) or higher.

B	**Go to step 4**
C	**CHECK FOR INTERMITTENT PROBLEMS**

A

2	**READ VALUE USING INTELLIGENT TESTER (CHECK FOR OPEN IN WIRE HARNESS)**

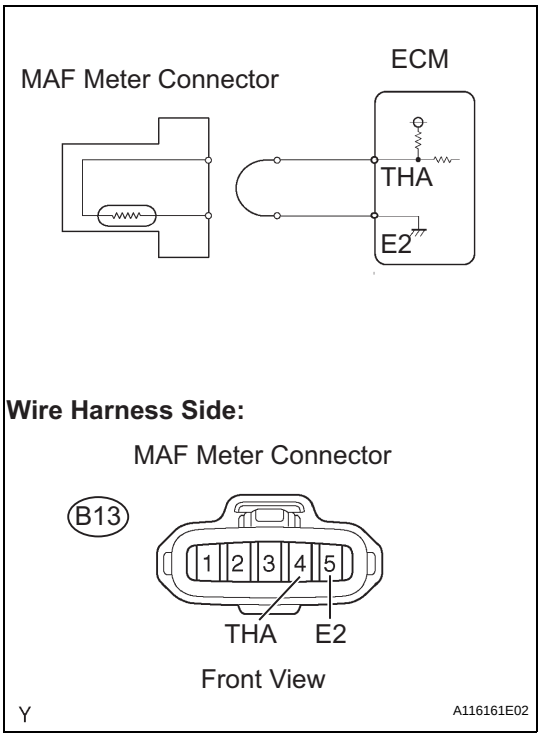

(a) Disconnect the B13 Mass Air Flow (MAF) meter connector.
(b) Connect terminals THA and E2 of the MAF meter wire harness side connector.
(c) Connect an intelligent tester to the DLC3.
(d) Turn the ignition switch ON.
(e) Turn the tester ON.
(f) Select the following menu items: DIAGNOSIS / ENHANCED OBD II / DATA LIST / PRIMARY / INTAKE AIR.
(g) Read the value displayed on the tester.
Standard:
140°C (284°F) or higher
(h) Reconnect the MAF meter connector.

OK	**CONFIRM GOOD CONNECTION TO SENSOR. IF OK, REPLACE MASS AIR FLOW METER (See page ES-409)**

NG

3	READ VALUE USING INTELLIGENT TESTER (CHECK FOR OPEN IN ECM)

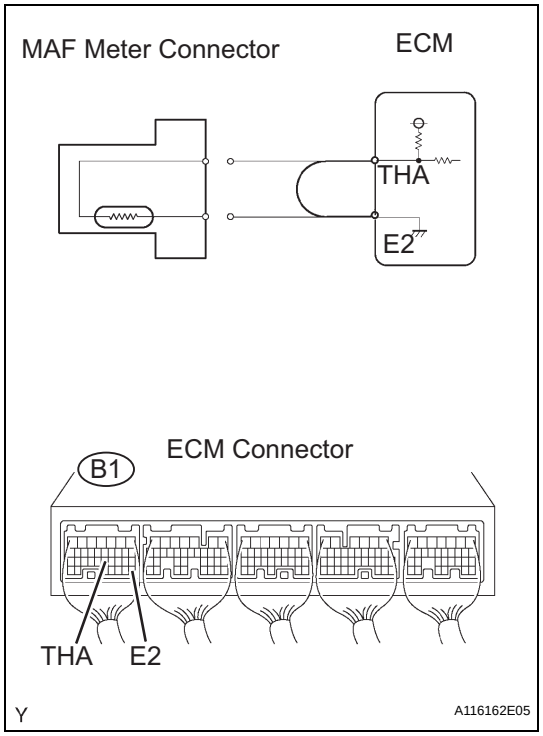

(a) Disconnect the B13 MAF meter connector.
(b) Connect terminals THA and E2 of the B1 ECM connector.
HINT:
Before checking, do visual and contact pressure checks on the ECM connector.
(c) Connect an intelligent tester to the DLC3.
(d) Turn the ignition switch ON.
(e) Turn the tester ON.
(f) Select the following menu items: DIAGNOSIS / ENHANCED OBD II / DATA LIST / PRIMARY / INTAKE AIR.
(g) Read the value displayed on the tester.
Standard:
140°C (284°F) or higher.
(h) Reconnect the MAF meter connector.

OK → **REPAIR OR REPLACE HARNESS OR CONNECTOR**

NG

CONFIRM GOOD CONNECTION TO ECM. IF OK, REPLACE ECM (See page ES-446)

4	READ VALUE USING INTELLIGENT TESTER (CHECK FOR SHORT IN WIRE HARNESS)

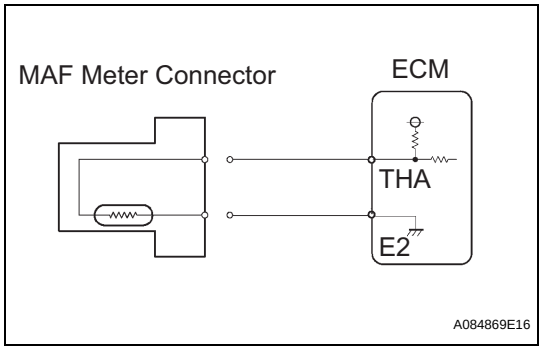

(a) Disconnect the B13 MAF meter connector.
(b) Connect an intelligent tester to the DLC3.
(c) Turn the ignition switch ON.
(d) Turn the tester ON.
(e) Select the following menu items: DIAGNOSIS / ENHANCED OBD II / DATA LIST / PRIMARY / INTAKE AIR.
(f) Read the value displayed on the tester.
Standard:
-40°C (-40°F)
(g) Reconnect the MAF meter connector.

OK → **REPLACE MASS AIR FLOW METER (See page ES-409)**

NG

5	READ VALUE USING INTELLIGENT TESTER (CHECK FOR SHORT ECM)

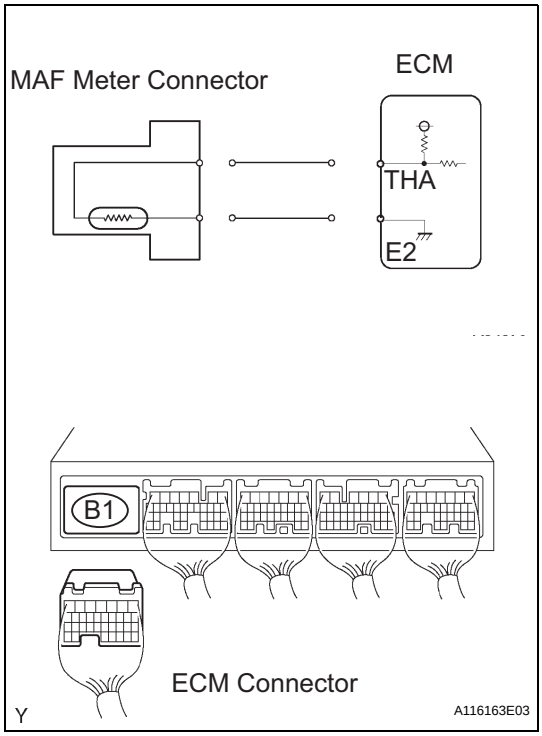

(a) Disconnect the B1 ECM connector.
(b) Connect an intelligent tester to the DLC3.
(c) Turn the ignition switch ON.
(d) Turn the tester ON.
(e) Select the following menu items: DIAGNOSIS / ENHANCED OBD II / DATA LIST / PRIMARY / INTAKE AIR.
(f) Read the value displayed on the tester.
Standard:
-40°C (-40°F)
(g) Reconnect the ECM connector.

OK → **REPAIR OR REPLACE HARNESS OR CONNECTOR**

NG

REPLACE ECM (See page ES-446)

ES

DTC	P0111	Intake Air Temperature Sensor Gradient Too High

DESCRIPTION

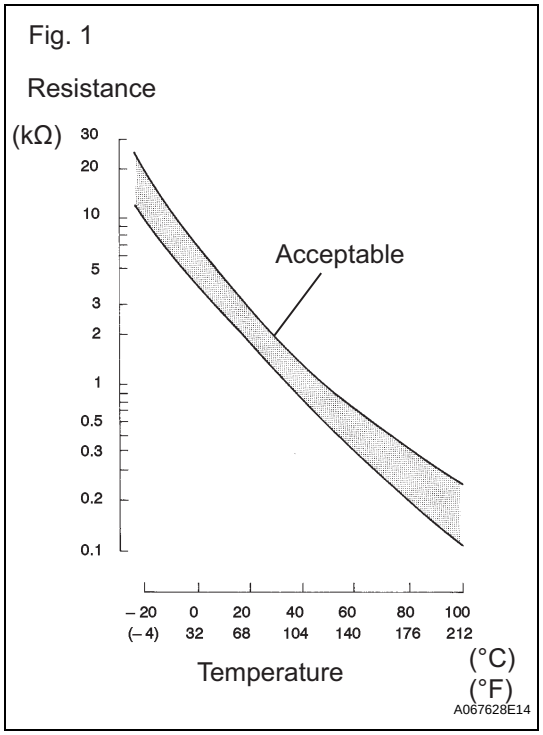

The Intake Air Temperature (IAT) sensor, mounted on the Mass Air Flow (MAF) meter, monitors the IAT. The IAT sensor has a built in thermistor with a resistance that varies according to the temperature of the intake air. When the IAT is low, the resistance of the thermistor increases. When the temperature is high, the resistance drops. These variations in resistance are transmitted to the ECM as voltage changes (See Fig. 1).

The IAT sensor is powered by a 5 V supply from the THA terminal of the ECM, via resistor R. Resistor R and the IAT sensor are connected in series. When the resistance value of the IAT sensor changes, according to changes in the IAT, the voltage at terminal THA also varies. Based on this signal, the ECM increases the fuel injection volume when the engine is cold to improve driveability.

DTC No.	DTC Detection Conditions	Trouble Areas
P0111	When either of following conditions met (2 trip detection logic): • The intake air temperature rise is large, from the previous trip warm-up to the following trip. • When the change in the intake air temperature after engine start is less than the threshold value.	Mass air flow meter

MONITOR DESCRIPTION

The ECM performs OBD II monitoring based on the values from the intake air temperature sensor. If there is no change of the sensor value within the normal range, the ECM will not be able to perform OBD II monitoring or will misdiagnose that there is a malfunction in the sensor. The ECM detects the stuck intake air temperature sensor value by performing monitoring after the ignition switch is turned OFF or START.

MONITOR STRATEGY

Related DTCs	P0111: Intake air temperature sensor rationality (After engine stop) P0111: Intake air temperature sensor rationality (After cold engine start)

Required Sensors/Components (Main)	Intake Air Temperature (IAT) sensor
Required Sensors/Components (Sub)	Engine Coolant Temperature (ECT) sensor and Mass Air Flow (MAF) meter
Frequency of Operation	Once per driving cycle
Duration	10 seconds or more
MIL Operation	2 driving cycles
Sequence of Operation	None

TYPICAL ENABLING CONDITIONS

All:

Monitor runs whenever following DTCs are not present	-
Battery voltage	10.5 V or more

After engine stop:

Time after engine start	10 seconds or more
ECT sensor circuit	OK
ECT in previous driving cycle	80°C (176°F) or more
Accumulated MAF amount in previous driving cycle	7,000 g or more
ECT when 30 minutes elapsed after engine stop	20°C (68°F) or more

After cold engine start:

Key-off duration	5 hours
Time after engine start	10 seconds or more
ECT sensor circuit	OK
ECT	70°C (158°F) or more
Accumulated MAF amount	7,000 g or more
One of the following conditions 1 or 2 is met:	-
1. Duration while engine load is low	120 seconds or more
2. Duration while engine load is high	10 seconds or more

TYPICAL MALFUNCTION THRESHOLDS

After engine stop:

IAT change	Less than 1°C (2°F)

After cold engine start:

IAT change	Less than 1°C (2°F)

WIRING DIAGRAM

Refer to DTC P0110 (See page ES-102).

INSPECTION PROCEDURE

1	**CHECK ANY OTHER DTCS OUTPUT (IN ADDITION TO DTC P0111)**

(a) Connect the intelligent tester to the DLC3.
(b) Turn the ignition switch ON.
(c) Turn the tester ON.
(d) Enter the following menus: DIAGNOSIS / ENHANCED OBD II / DTC INFO / CURRENT CODES.
(e) Read DTCs.

Result

Display (DTC Output)	Proceed To
P0111 and other DTCs	A
P0111	B

HINT:
If any DTCs other than P0111 are output, troubleshoot those DTCs first.

B → **REPLACE MASS AIR FLOW METER (See page ES-409)**

A

GO TO DTC CHART (See page ES-57)

DTC	P0115	Engine Coolant Temperature Circuit

DTC	P0117	Engine Coolant Temperature Circuit Low Input

DTC	P0118	Engine Coolant Temperature Circuit High Input

DESCRIPTION

A thermistor is built into the Engine Coolant Temperature (ECT) sensor, of which the resistance value varies according to the ECT.
The structure of the sensor and its connection to the ECM are the same as those of the Intake Air Temperature (IAT) sensor.

ES

HINT:
When any of DTCs P0115, P0117 and P0118 are set, the ECM enters fail-safe mode. During fail-safe mode, the ECT is estimated to be 80°C (176°F) by the ECM. Fail-safe mode continues until a pass condition is detected.

DTC No.	Proceed To	DTC Detection Conditions	Trouble Areas
P0115	Step 1	Open or short in Engine Coolant Temperature (ECT) sensor circuit for 0.5 seconds (1 trip detection logic)	• Open or short in ECT sensor circuit • ECT sensor • ECM
P0117	Step 4	Short in Engine Coolant Temperature (ECT) sensor circuit for 0.5 seconds (1 trip detection logic)	• Short in ECT sensor circuit • ECT sensor • ECM
P0118	Step 2	Open in Engine Coolant Temperature (ECT) sensor circuit for 0.5 seconds (1 trip detection logic)	• Open in ECT sensor circuit • ECT sensor • ECM

HINT:
When any of these DTCs are set, check the ECT by selecting the following menu items on an intelligent tester: DIAGNOSIS / ENHANCED OBD II / DATA LIST / PRIMARY / COOLANT TEMP.

Temperature Displayed	Malfunctions
-40°C (-40°F)	Open circuit
140°C (284°F) or higher	Short circuit

MONITOR DESCRIPTION

The Engine Coolant Temperature (ECT) sensor is used to monitor the ECT. The ECT sensor has a thermistor with a resistance that varies according to the temperature of the engine coolant. When the coolant temperature is low, the resistance in the thermistor increases. When the temperature is high, the resistance drops.
These variations in resistance are reflected in the voltage output from the sensor. The ECM monitors the sensor voltage and uses this value to calculate the ECT. When the sensor output voltage deviates from the normal operating range, the ECM interprets this as a fault in the ECT sensor and sets a DTC.
Example:
If the sensor voltage output is more than 4.91 V for 0.5 seconds or more, the ECM determines that there is an open in the ECT sensor circuit, and sets DTC P0118. Conversely, if the voltage output is less than 0.14 V for 0.5 seconds or more, the ECM determines that there is a short in the sensor circuit, and sets DTC P0117.
If the malfunction is not repaired successfully, a DTC is set 0.5 seconds after the engine is next started.

MONITOR STRATEGY

Related DTCs	P0115: Engine coolant temperature sensor open/short (Fluctuating) P0117: Engine coolant temperature sensor short (Low voltage) P0118: Engine coolant temperature sensor open (High voltage)

Required Sensors/Components (Main)	Engine coolant temperature sensor
Required Sensors/Components (Related)	-
Frequency of Operation	Continuous
Duration	0.5 seconds
MIL Operation	Immediate
Sequence of Operation	None

TYPICAL ENABLING CONDITIONS

Monitor runs whenever following DTCs not present	None

TYPICAL MALFUNCTION THRESHOLDS

P0115:

Engine coolant temperature sensor voltage	Less than 0.14 V, or more than 4.91 V

P0117:

Engine coolant temperature sensor voltage	Less than 0.14 V

P0118:

Engine coolant temperature sensor voltage	More than 4.91 V

COMPONENT OPERATING RANGE

Engine coolant temperature sensor voltage	0.14 V to 4.91 V

WIRING DIAGRAM

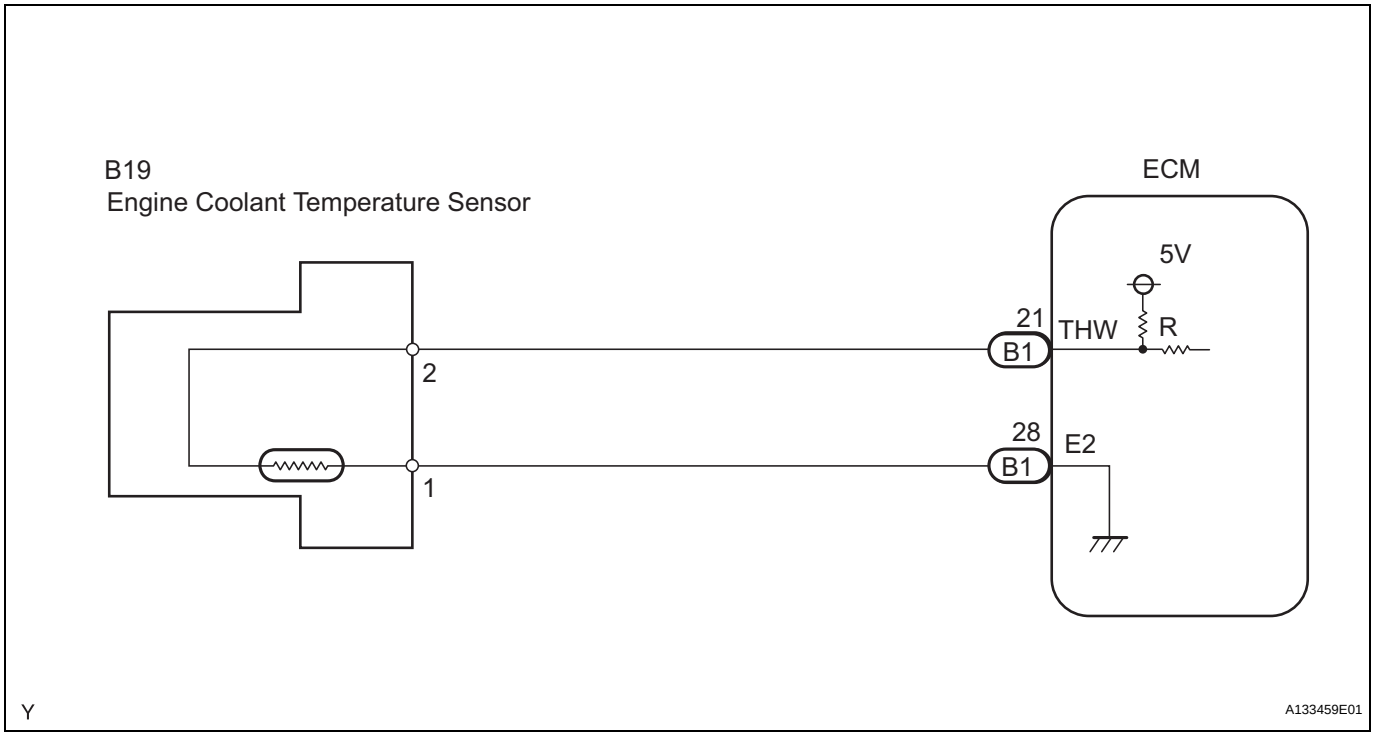

INSPECTION PROCEDURE

HINT:

- If other DTCs relating to different systems that have terminal E2 as the ground terminal are output simultaneously, terminal E2 may have an open circuit.
- Read freeze frame data using an intelligent tester. Freeze frame data record the engine condition when malfunctions are detected. When troubleshooting, freeze frame data can help determine if the vehicle was moving or stationary, if the engine was warmed up or not, if the air-fuel ratio was lean or rich, and other data, from the time the malfunction occurred.

1	READ VALUE USING INTELLIGENT TESTER (ENGINE COOLANT TEMPERATURE)

ES

(a) Connect an intelligent tester to the DLC3.
(b) Turn the ignition switch ON.
(c) Turn the tester ON.
(d) Select the following menu items: DIAGNOSIS / ENHANCED OBD II / DATA LIST / PRIMARY / COOLANT TEMP.
(e) Read the value displayed on the tester.
Standard:
80°C to 97°C (176°F to 207°F) with warm engine.

Result

Temperature Displayed	Proceed To
-40°C (-40°F)	A
140°C (284°F) or higher	B
80°C to 97°C (176°F to 207°F)	C

HINT:

- If there is an open circuit, the intelligent tester indicates -40°C (-40°F).
- If there is a short circuit, the intelligent tester indicates 140°C (284°F) or higher.

B → **Go to step 4**

C → **CHECK FOR INTERMITTENT PROBLEMS**

A

2	READ VALUE USING INTELLIGENT TESTER (CHECK FOR OPEN IN WIRE HARNESS)

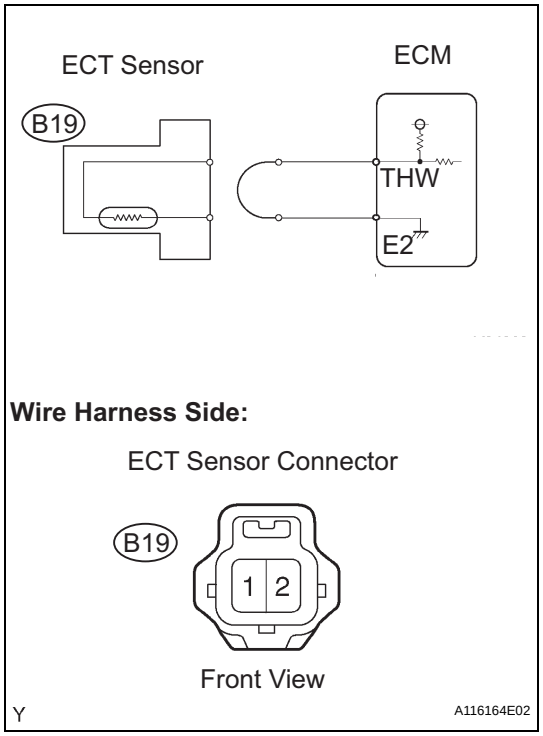

(a) Disconnect the B19 Engine Coolant Temperature (ECT) sensor connector.
(b) Connect terminals 1 and 2 of the ECT sensor connector on the wire harness side.
(c) Connect an intelligent tester to the DLC3.
(d) Turn the ignition switch ON.
(e) Turn the tester ON.
(f) Select the following menu items: DIAGNOSIS / ENHANCED OBD II / DATA LIST / PRIMARY / COOLANT TEMP.
(g) Read the value displayed on the tester.
Standard:
140°C (284°F) or higher
(h) Reconnect the ECT sensor connector.

OK → **CONFIRM GOOD CONNECTION TO SENSOR. IF OK, REPLACE ENGINE COOLANT TEMPERATURE SENSOR (See page ES-424)**

NG

3	READ VALUE USING INTELLIGENT TESTER (CHECK FOR OPEN IN ECM)

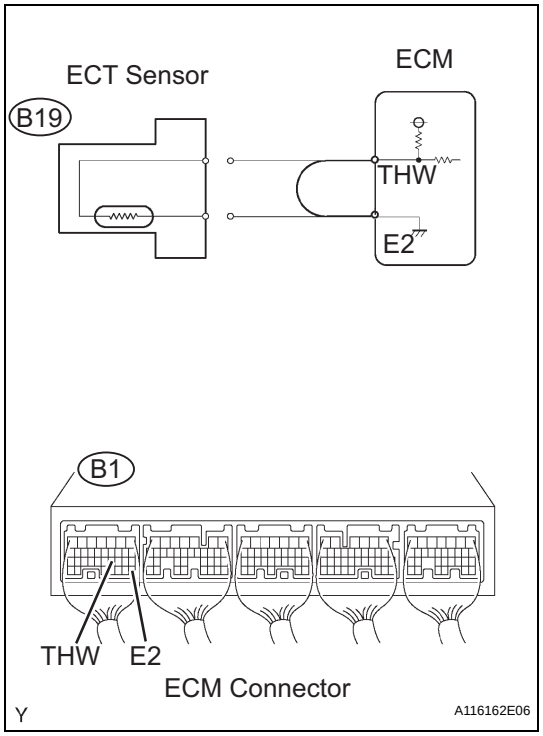

(a) Disconnect the B19 ECT sensor connector.
(b) Connect terminals THW and E2 of the B1 ECM connector.
HINT:
Before checking, do visual and contact pressure checks on the ECM connector.
(c) Connect an intelligent tester to the DLC3.
(d) Turn the ignition switch ON.
(e) Turn the tester ON.
(f) Select the following menu items: DIAGNOSIS / ENHANCED OBD II / DATA LIST / PRIMARY / COOLANT TEMP.
(g) Read the value displayed on the tester.
Standard:
140°C (284°F) or higher
(h) Reconnect the ECT sensor connector.

OK → **REPAIR OR REPLACE HARNESS OR CONNECTOR**

ES

NG

CONFIRM GOOD CONNECTION TO ECM. IF OK, REPLACE ECM (See page ES-446)

4	READ VALUE USING INTELLIGENT TESTER (CHECK FOR SHORT IN WIRE HARNESS)

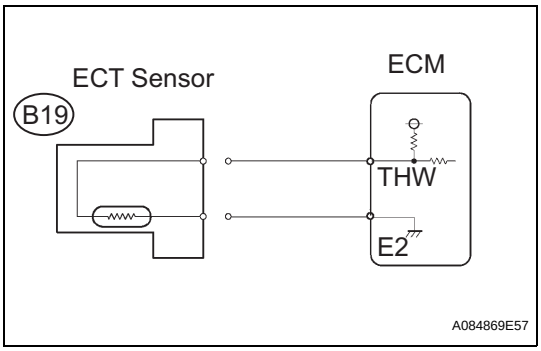

(a) Disconnect the B19 ECT sensor connector.
(b) Connect an intelligent tester to the DLC3.
(c) Turn the ignition switch ON.
(d) Turn the tester ON.
(e) Select the following menu items: DIAGNOSIS / ENHANCED OBD II / DATA LIST / PRIMARY / COOLANT TEMP.
(f) Read the value displayed on the tester.
Standard:
-40°C (-40°F)
(g) Reconnect the ECT sensor connector.

OK → **REPLACE ENGINE COOLANT TEMPERATURE SENSOR (See page ES-424)**

NG

5	READ VALUE USING INTELLIGENT TESTER (CHECK FOR SHORT IN ECM)

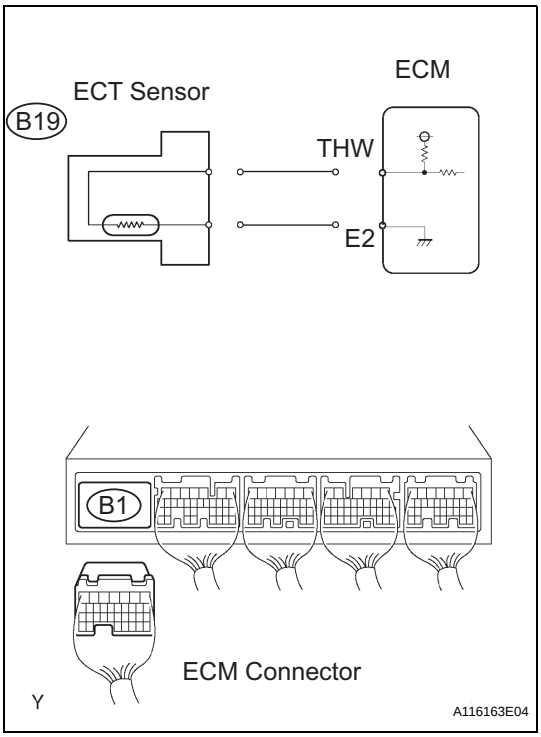

(a) Disconnect the B1 ECM connector.
(b) Connect an intelligent tester to the DLC3.
(c) Turn the ignition switch ON.
(d) Turn the tester ON.
(e) Select the following menu items: DIAGNOSIS / ENHANCED OBD II / DATA LIST / PRIMARY / COOLANT TEMP.
(f) Read the value displayed on the tester.
Standard:
-40°C (-40°F)
(g) Reconnect the ECM connector.

OK → **REPAIR OR REPLACE HARNESS OR CONNECTOR**

NG

REPLACE ECM (See page ES-446)

DTC	P0116	Engine Coolant Temperature Circuit Range / Performance Problem

DESCRIPTION

Refer to DTC P0115 (See page ES-109).

DTC No.	DTC Detection Conditions	Trouble Areas
P0116	When either of following conditions met (2 trip detection logic): • When cold engine started and engine warmed up, Engine Coolant Temperature (ECT) sensor value does not change. • After warmed up engine started, if ECT sensor value does not change when engine stopped and then next cold engine start performed, it determined that malfunction has occurred.	• Thermostat • ECT sensor

ES

MONITOR DESCRIPTION

ECT sensor cold start monitor

When a cold engine start is performed and then the engine is warmed up, if the ECT sensor value does not change, it is determined that a malfunction has occurred. If this is detected in 2 consecutive driving cycles, the MIL is illuminated and a DTC is set.

ECT sensor soak monitor

After a warmed up engine is started, if the ECT sensor value does not change when the engine is stopped and then the next cold engine start is performed, it is determined that a malfunction has occurred. If this is detected in 2 consecutive driving cycles, the MIL is illuminated and a DTC is set.

MONITOR STRATEGY

Related DTCs	P0116: ECT sensor cold start monitor P0116: ECT sensor soak monitor
Required Sensors/Components (Main)	ECT sensor
Required Sensors/Components (Related)	Intake Air Temperature (IAT) sensor and Mass Air Flow (MAF) meter
Frequency of Operation	Once per driving cycle
Duration	10 seconds
MIL Operation	2 driving cycles
Sequence of Operation	None

TYPICAL ENABLING CONDITIONS

ECT Sensor cold start monitor:

Monitor runs whenever following DTCs not present	P0100 to P0103: MAF meter P0110 to P0113: IAT sensor
Battery voltage	10.5 V or more
Time after engine start	1 second or more
ECT at engine start	Less than 60°C (140°F)
IAT sensor circuit	OK
Soak time	5 hours or more
Accumulated MAF	900 g or more
Engine	Running
Fuel cut	OFF
Difference between ECT at engine start and IAT	Less than 40°C (72°F)

ECT Sensor soak monitor:

Monitor runs whenever following DTCs not present	P0100 to P0103: MAF meter P0110 to P0113: IAT sensor
Battery voltage	10.5 V or more
Engine	Running
Soak time	5 hours or more
Either (a) or (b) condition met	-
(a) ECT	60°C (140°F) or more
(b) Accumulated MAF	5,000 g or more

TYPICAL MALFUNCTION THRESHOLDS

ECT Sensor cold start monitor:

ECT sensor value change	Less than 5°C (9°F)

ECT Sensor soak monitor:

Difference between current ECT sensor value and previous ECT sensor value when engine stopped	Less than 5°C (9°F)

COMPONENT OPERATING RANGE

ECT	ECT sensor value changes in accordance with actual ECT

INSPECTION PROCEDURE

HINT:

- If any of DTCs P0115, P0117, P0118 or P0125 are set simultaneously with DTC P0116, the ECT sensor may have an open or a short circuit. Troubleshoot those DTCs first.
- Read freeze frame data using an intelligent tester. Freeze frame data record the engine condition when malfunctions are detected. When troubleshooting, freeze frame data can help determine if the vehicle was moving or stationary, if the engine was warmed up or not, if the air-fuel ratio was lean or rich, and other data, from the time the malfunction occurred.

1	CHECK ANY OTHER DTCS OUTPUT (IN ADDITION TO DTC P0116)

(a) Connect an intelligent tester to the DLC3.
(b) Turn the ignition switch ON.
(c) Turn the tester ON.
(d) Select the following menu items: DIAGNOSIS / ENHANCED II / DTC INFO / CURRENT CODES.
(e) Read the DTC.

Result

Display (DTC Output)	Proceed To
P0116	A
P0116 and other DTCs	B

B → GO TO DTC CHART (See page ES-57)

A

2	INSPECT WATER INLET WITH THERMOSTAT

(a) Remove the water inlet with thermostat (See page CO-12).

(b) Check the valve opening temperature of the thermostat.
Standard:
80°C to 84°C (176°F to 183°F)
HINT:
In addition to the above check, confirm that the valve is completely closed when the temperature is below the standard.

(c) Reinstall the water inlet with thermostat (See page CO-13).

NG → **REPLACE WATER INLET WITH THERMOSTAT (See page CO-12)**

OK

REPLACE ENGINE COOLANT TEMPERATURE SENSOR (See page ES-424)

DTC	P0120	Throttle / Pedal Position Sensor / Switch "A" Circuit
DTC	P0122	Throttle / Pedal Position Sensor / Switch "A" Circuit Low Input
DTC	P0123	Throttle / Pedal Position Sensor / Switch "A" Circuit High Input
DTC	P0220	Throttle / Pedal Position Sensor / Switch "B" Circuit
DTC	P0222	Throttle / Pedal Position Sensor / Switch "B" Circuit Low Input
DTC	P0223	Throttle / Pedal Position Sensor / Switch "B" Circuit High Input
DTC	P2135	Throttle / Pedal Position Sensor / Switch "A" / "B" Voltage Correlation

ES

HINT:
These DTCs relate to the Throttle Position (TP) sensor.

DESCRIPTION

This ETCS (Electronic Throttle Control System) does not use a throttle cable. The Throttle Position (TP) sensor is mounted on the throttle body, and detects the opening angle of the throttle valve. This sensor is a non-contact type, and uses Hall-effect elements, in order to yield accurate signals, even in extreme driving conditions, such as at high speeds as well as very low speeds.
The TP sensor has two sensor circuits which each transmits a signal, VTA1 and VTA2. VTA1 is used to detect the throttle valve angle and VTA2 is used to detect malfunctions in VTA1. The sensor signal voltages vary between 0 V and 5 V in proportion to the throttle valve opening angle, and are transmitted to the VTA terminals of the ECM.
As the valve closes, the sensor output voltage decreases and as the valve opens, the sensor output voltage increases. The ECM calculates the throttle valve opening angle according to these signals and controls the throttle actuator in response to driver inputs. These signals are also used in calculations such as air-fuel ratio correction, power increase correction and fuel-cut control.

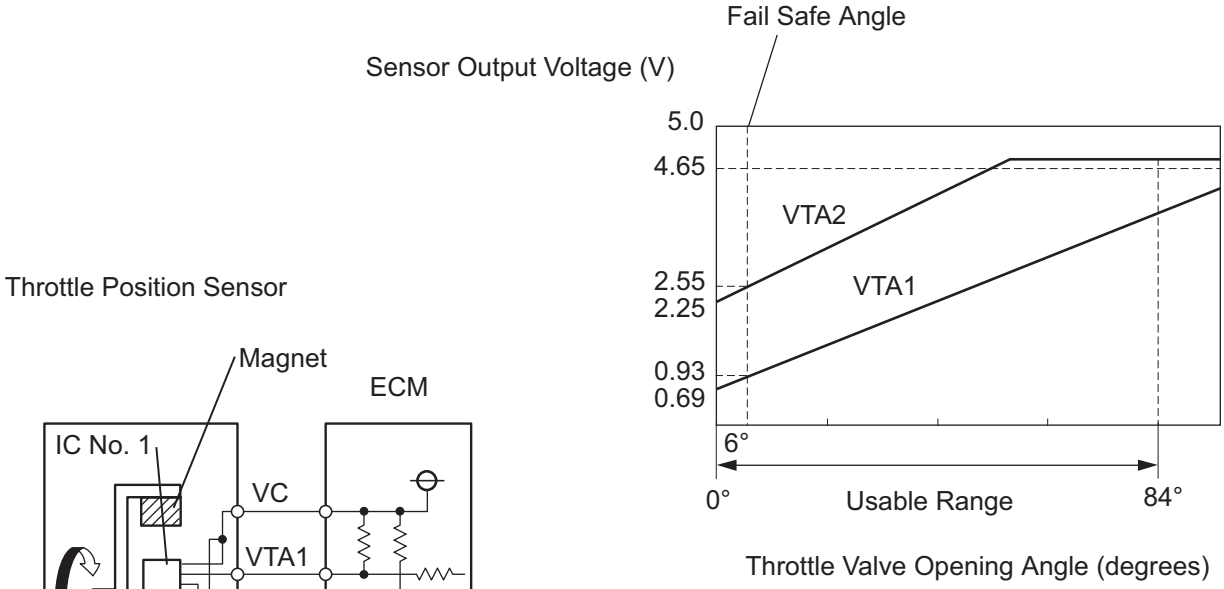

Note:

The throttle valve opening angle detected by the sensor terminal VTA1 is expressed as a percentage.

Between 10 % and 22 %: Throttle valve fully closed

Between 66 % and 98 %: Throttle valve fully open

Approximately 19 %: Fail-safe angle (6°)

Y

A122559E02

DTC No.	DTC Detection Conditions	Trouble Areas
P0120	Output voltage of VTA1 quickly fluctuates beyond lower and upper malfunction thresholds for 2 seconds when accelerator pedal depressed (1 trip detection logic)	• Throttle Position (TP) sensor (built into throttle body) • ECM
P0122	Output voltage of VTA1 0.2 V or less for 2 seconds when accelerator pedal depressed (1 trip detection logic)	• TP sensor (built into throttle body) • Short in VTA1 circuit • Open in VC circuit • ECM
P0123	Output voltage of VTA1 4.535 V or more for 2 seconds when accelerator pedal depressed (1 trip detection logic)	• TP sensor (built into throttle body) • Open in VTA1 circuit • Open in E2 circuit • Short between VC and VTA1 circuits • ECM
P0220	Output voltage of VTA2 quickly fluctuates beyond lower and upper malfunction thresholds for 2 seconds when accelerator pedal depressed (1 trip detection logic)	• TP sensor (built into throttle body) • ECM

DTC No.	DTC Detection Conditions	Trouble Areas
P0222	Output voltage of VTA2 1.75 V or less for 2 seconds when accelerator pedal depressed (1 trip detection logic)	• TP sensor (built into throttle body) • Short in VTA2 circuit • Open in VC circuit • ECM
P0223	Output voltage of VTA2 4.8 V or more, and VTA1 between 0.2 V and 2.02 V, for 2 seconds when accelerator pedal depressed (1 trip detection logic)	• TP sensor (built into throttle body) • Open in VTA2 circuit • Open in E2 circuit • Short between VC and VTA2 circuits • ECM
P2135	Either condition (a) or (b) met (1 trip detection logic) (a) Difference between output voltages of VTA1 and VTA2 0.02 V or less for 0.5 seconds or more (b) Output voltage of VTA1 0.2 V or less, and VTA2 1.75 V or less, for 0.4 seconds or more	• Short between VTA1 and VTA2 circuits • TP sensor (built into throttle body) • ECM

ES

HINT:

- When any of these DTCs are set, check the throttle valve opening angle by selecting the following menu items on an intelligent tester: DIAGNOSIS / ENHANCED OBD II / DATA LIST / ETCS / THROTTLE POS #1 AND THROTTLE POS #2.
- THROTTLE POS #1 denotes the VTA1 signal, and THROTTLE POS #2 denotes the VTA2 signal .

Reference (Normal Condition)

Tester Display	Accelerator Pedal Fully Released	Accelerator Pedal Fully Depressed
THROTTLE POS #1	**0.5 to 1.1 V**	**3.3 to 4.9 V**
THROTTLE POS #2	**2.1 to 3.1 V**	**4.6 to 5.0 V**

MONITOR DESCRIPTION

The ECM uses the Throttle Position (TP) sensor to monitor the throttle valve opening angle. There are several checks that the ECM performs to confirm the proper operation of the TP sensor.

- A specific voltage difference is expected between the sensor terminals, VTA1 and VTA2, for each throttle valve opening angle. If the difference between VTA1 and VTA2 is incorrect, the ECM interprets this as a malfunction in the sensor, and sets a DTC.
- VTA1 and VTA2 each have a specific voltage range. If VTA1 or VTA2 is outside the normal operating range, the ECM interprets this as a malfunction in the sensor, and sets a DTC.
- VTA1 and VTA2 should never be close to the same voltage level. If VTA1 is within 0.02 V of VTA2, the ECM determines that there is a short circuit in the sensor, and sets a DTC.

If the malfunction is not repaired successfully, a DTC is set 10 seconds after the engine is next started.

MONITOR STRATEGY

Related DTCs	P0120: Throttle position sensor 1 range check (Fluctuating) P0122: Throttle position sensor 1 range check (Low voltage) P0123: Throttle position sensor 1 range check (High voltage) P0220: Throttle position sensor 2 range check (Fluctuating) P0222: Throttle position sensor 2 range check (Low voltage) P0223: Throttle position sensor 2 range check (High voltage) P2135: Throttle position sensor range check (Correlation)
Required Sensors/Components (Main)	Throttle position sensor
Required Sensors/Components (Related)	-
Frequency of Operation	Continuous
Duration	2 seconds: P0120, P0122, P0123, P0220, P0222 and P0223 (Accelerator pedal ON) 10 seconds: P0120, P0122, P0123, P0220, P0222 and P0223 (Accelerator pedal OFF) Within 0.5 seconds: P2135
MIL Operation	Immediate
Sequence of Operation	None

TYPICAL ENABLING CONDITIONS

Monitor runs whenever following DTCs not present	None

TYPICAL MALFUNCTION THRESHOLDS

P0120:

VTA1 voltage	0.2 V or less, or 4.535 V or more

P0122:

VTA1 voltage	0.2 V or less

P0123:

VTA1 voltage	4.535 V or more

P0220:

VTA2 voltage	1.75 V or less, or 4.8 V or more

P0222:

VTA2 voltage	1.75 V or less

P0223:

VTA2 voltage when VTA1 0.2 V or more, and 2.02 V or less	4.8 V or more

P2135:

Either of following conditions A or B met:	-
Condition A	-
Difference between VTA1 and VTA2 voltages	0.02 V or less
Condition B	-
VTA1 voltage	0.2 V or less
VTA2 voltage	1.75 V or less

COMPONENT OPERATING RANGE

VTA1 voltage	0.69 to 4.05 V
VTA2 voltage	2.25 to 4.8 V

FAIL-SAFE

When any of these DTCs, as well as other DTCs relating to ETCS (Electronic Throttle Control System) malfunctions, are set, the ECM enters fail-safe mode. During fail-safe mode, the ECM cuts the current to the throttle actuator off, and the throttle valve is returned to a 6° throttle angle by the return spring. The ECM then adjusts the engine output by controlling the fuel injection (intermittent fuel-cut) and ignition timing, in accordance with the accelerator pedal opening angle, to allow the vehicle to continue at a minimal speed.

If the accelerator pedal is depressed firmly and gently, the vehicle can be driven slowly.

Fail-safe mode continues until a pass condition is detected, and the ignition switch is then turned OFF.

WIRING DIAGRAM

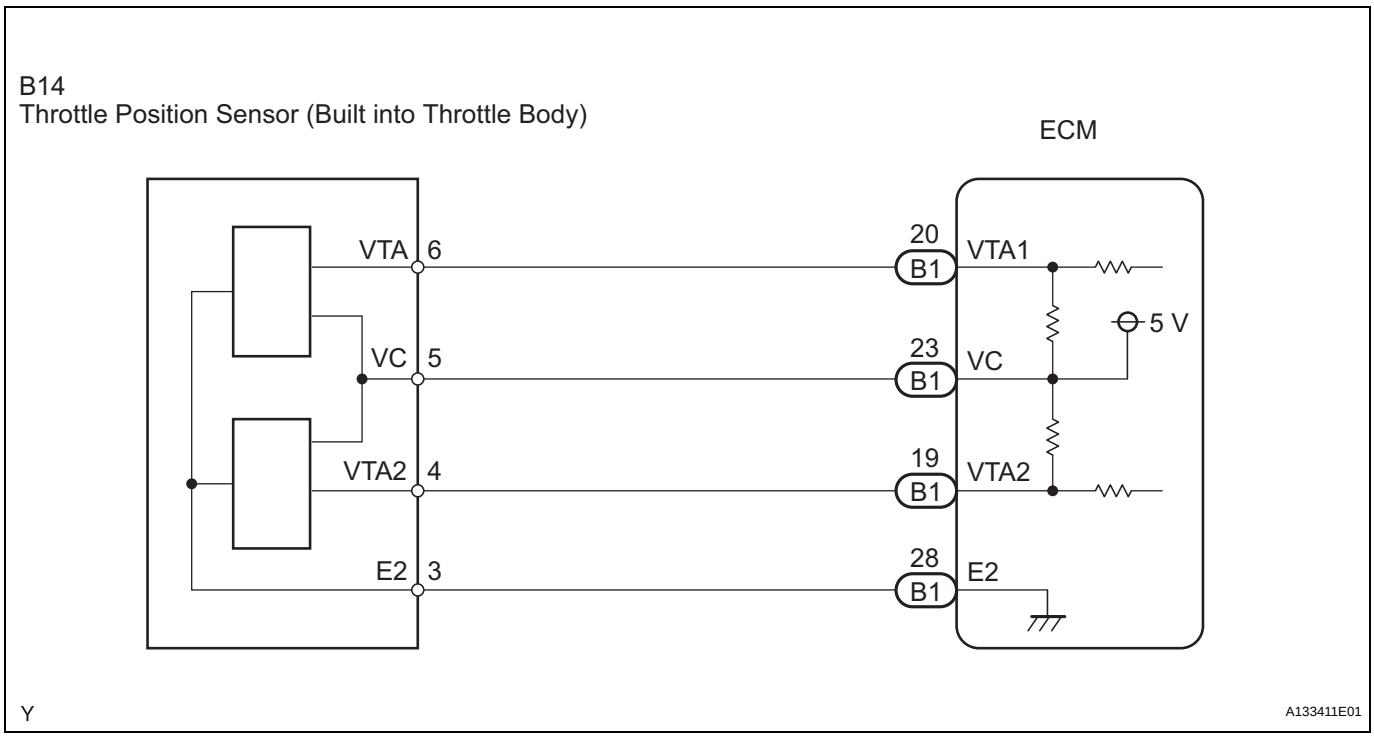

INSPECTION PROCEDURE

HINT:

- If other DTCs relating to different systems that have terminal E2 as the ground terminal are output simultaneously, terminal E2 may have an open circuit.
- Read freeze frame data using an intelligent tester. Freeze frame data record the engine condition when malfunctions are detected. When troubleshooting, freeze frame data can help determine if the vehicle was moving or stationary, if the engine was warmed up or not, if the air-fuel ratio was lean or rich, and other data, from the time the malfunction occurred.

1	READ VALUE USING INTELLIGENT TESTER (THROTTLE POS #1 AND THROTTLE POS #2)

(a) Connect an intelligent tester to the DLC3.
(b) Turn the ignition switch ON and turn the tester ON.
(c) Select the following menu items: DIAGNOSIS / ENHANCED OBD II / DATA LIST / ETCS / THROTTLE POS #1 and THROTTLE POS #2.
(d) Check the values displayed on the tester.

Result

TP#1 (VTA1) When Accelerator Pedal Released	TP#2 (VTA2) When Accelerator Pedal Released	TP#1 (VTA1) When Accelerator Pedal Depressed	TP#2 (VTA2) When Accelerator Pedal Depressed	Trouble Areas	Proceed To
0 to 0.2 V	0 to 0.2 V	0 to 0.2 V	0 to 0.2 V	VC circuit open	A
4.5 to 5.0 V	4.5 to 5.0 V	4.5 to 5.0 V	4.5 to 5.0 V	E2 circuit open	A
0 to 0.2 V, or 4.5 to 5.0 V	2.1 to 3.1 V (Fail-safe)	0 to 0.2 V, or 4.5 to 5.0 V	2.1 to 3.1 V (Fail-safe)	VTA1 circuit open or ground short	A
Approximately 0.93 V (Fail-safe)	0 to 0.2 V, or 4.5 to 5.0 V	Approximately 2.55 V (Fail-safe)	0 to 0.2 V, or 4.5 to 5.0 V	VTA2 circuit open or ground short	A

TP#1 (VTA1) When Accelerator Pedal Released	TP#2 (VTA2) When Accelerator Pedal Released	TP#1 (VTA1) When Accelerator Pedal Depressed	TP#2 (VTA2) When Accelerator Pedal Depressed	Trouble Areas	Proceed To
0.5 to 1.1 V	2.1 to 3.1 V	3.3 to 4.9 V	4.6 to 5.0 V	TP sensor circuit normal	B

HINT:
TP#1 denotes THROTTLE POS #1, and TP#2 denotes THROTTLE POS#2.

B → **Go to step 5**

A

2 CHECK HARNESS AND CONNECTOR (THROTTLE POSITION SENSOR - ECM)

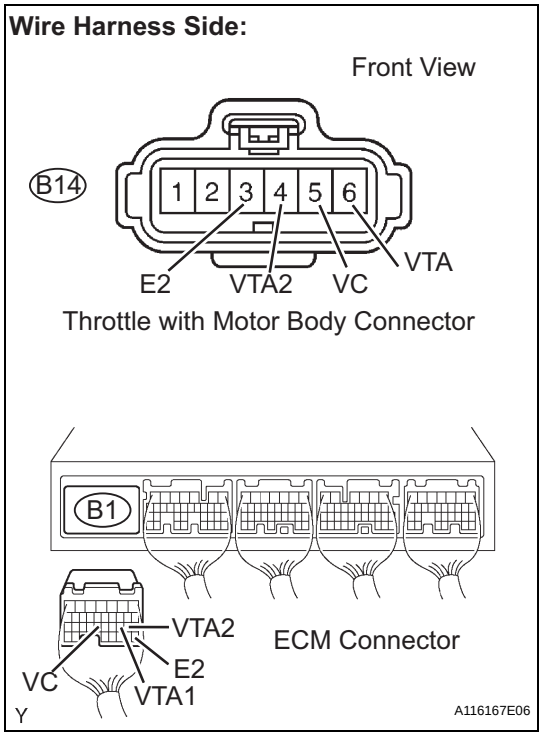

(a) Disconnect the B14 throttle with motor body connector.
(b) Disconnect the B1 ECM connector.
(c) Check the resistance.

Standard Resistance (Check for open)

Tester Connections	Specified Conditions
VC (B14-5) - VC (B1-23)	Below 1 Ω
VTA (B14-6) - VTA1 (B1-20)	
VTA2 (B14-4) - VTA2 (B1-19)	
E2 (B14-3) - E2 (B1-28)	

Standard Resistance (Check for short)

Tester Connections	Specified Conditions
VC (B14-5) or VC (B1-23) - Body grouB14nd	10 kΩ or higher
VTA (B14-6) or VTA1 (B1-20) - Body ground	
VTA2 (B14-4) or VTA2 (B1-19) - Body ground	

(d) Reconnect the throttle with motor body connector.
(e) Reconnect the ECM connector.

NG → **REPAIR OR REPLACE HARNESS OR CONNECTOR**

OK

3	INSPECT ECM (VC VOLTAGE)

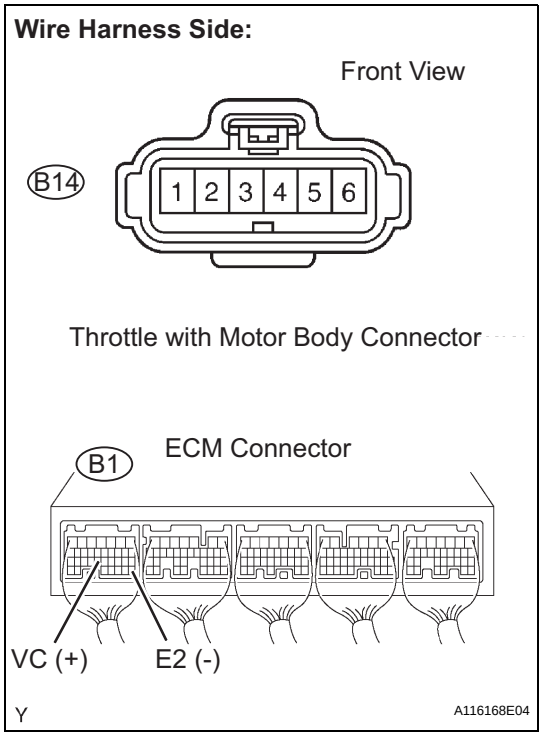

(a) Disconnect the B14 throttle with motor body connector.
(b) Turn the ignition switch ON.
(c) Measure the voltage between the terminals of the B1 ECM connector.

Standard Voltage

Tester Connections	Specified Conditions
VC (B1-23) - E2 (B1-28)	4.5 to 5.5 V

(d) Reconnect the throttle with motor body connector.

NG → **REPLACE ECM (See page ES-446)**

OK

4	REPLACE THROTTLE WITH MOTOR BODY ASSEMBLY

Replace the throttle with motor body assembly (See page ES-428).

NEXT

5	CHECK WHETHER DTC OUTPUT RECURS (THROTTLE POSITION SENSOR DTCS)

(a) Connect an intelligent tester to the DLC3.
(b) Turn the ignition switch ON and turn the tester ON.
(c) Clear DTCs (See page ES-38).
(d) Start the engine.
(e) Allow the engine to idle for 15 seconds or more.
(f) Select the following menu items: DIAGNOSIS / ENHANCED OBD II / DTC INFO / CURRENT CODES.
(g) Read DTCs.

Result

Display (DTC Output)	Proceed To
P0120, P0122, P0123, P0220, P0222, P0223 and/or P2135	A
No output	B

B → **SYSTEM OK**

A

REPLACE ECM (See page ES-446)

DTC	P0121	Throttle / Pedal Position Sensor / Switch "A" Circuit Range / Performance Problem

HINT:
This DTC relates to the Throttle Position (TP) sensor.

DESCRIPTION

Refer to DTC P0120 (See page ES-117).

DTC No.	DTC Detection Conditions	Trouble Areas
P0121	Difference between VTA1 and VTA2 voltages less than 0.8 V, or more than 1.6 V for 2 seconds (1 trip detection logic)	• TP sensor (built into throttle body)

ES

MONITOR DESCRIPTION

The ECM uses the TP sensor to monitor the throttle valve opening angle.
This sensor transmits two signals: VTA1 and VTA2. VTA1 is used to detect the throttle opening angle and VTA2 is used to detect malfunctions in VTA1. The ECM performs several checks to confirm the proper operation of the TP sensor and VTA1.
For each throttle opening angle, a specific voltage difference is expected between the outputs of VTA1 and VTA2. If the voltage output difference between the two signals deviates from the normal operating range, the ECM interprets this as a malfunction of the TP sensor. The ECM illuminates the MIL and sets the DTC.
If the malfunction is not repaired successfully, the DTC is set 2 seconds after the engine is next started.

MONITOR STRATEGY

Related DTCs	P0121: TP sensor rationality
Required Sensors/Components (Main)	TP sensor
Required Sensors/Components (Related)	-
Frequency of Operation	Continuous
Duration	Within 2 seconds
MIL Operation	Immediate
Sequence of Operation	None

TYPICAL ENABLING CONDITIONS

Either of following conditions A or B is met	-
A. Ignition switch	ON
B. Electric throttle motor power	ON
TP sensor malfunction (P0120, P0122, P0123, P0220, P0222, P0223, P2135)	Not detected

TYPICAL MALFUNCTION THRESHOLDS

Either of following conditions is met	-
"Difference of TP sensor voltage between VTA1 and VTA2 x 0.8"	Higher than 1.6 V
"Difference of TP sensor voltage between VTA1 and VTA2 x 0.8"	Lower than 0.8 V

FAIL-SAFE

When this DTC, as well as other DTCs relating to ETCS (Electronic Throttle Control System) malfunctions, is set, the ECM enters fail-safe mode. During fail-safe mode, the ECM cuts the current to the throttle actuator off, and the throttle valve is returned to a 6° throttle angle by the return spring. The ECM then adjusts the engine output by controlling the fuel injection (intermittent fuel-cut) and ignition timing, in accordance with the accelerator pedal opening angle, to allow the vehicle to continue at a minimal speed. If the accelerator pedal is depressed firmly and gently, the vehicle can be driven slowly. Fail-safe mode continues until a pass condition is detected, and the ignition switch is then turned OFF.

INSPECTION PROCEDURE

HINT:

Read freeze frame data using an intelligent tester. Freeze frame data record the engine condition when malfunctions are detected. When troubleshooting, freeze frame data can help determine if the vehicle was moving or stationary, if the engine was warmed up or not, if the air-fuel ratio was lean or rich, and other data, from the time the malfunction occurred.

ES

1	CHECK ANY OTHER DTCS OUTPUT (IN ADDITION TO DTC P0121)

(a) Connect an intelligent tester to the DLC3.
(b) Turn the ignition switch ON.
(c) Turn the tester ON.
(d) Enter the following menus: DIAGNOSIS / ENHANCED II / DTC INFO / CURRENT CODES.
(e) Read the DTC.

Result

Display (DTC Output)	Proceed to
P0121	A
P0121 and other DTCs	B

B → **GO TO DTC CHART (See page ES-57)**

A →

REPLACE THROTTLE WITH MOTOR BODY ASSEMBLY (See page ES-428)

DTC	P0125	Insufficient Coolant Temperature for Closed Loop Fuel Control

DESCRIPTION

Refer to DTC P0115 (See page ES-109).

DTC No.	DTC Detection Conditions	Trouble Areas
P0125	Engine coolant temperature (ECT) does not reach closed-loop enabling temperature for 20 minutes (this period varies with engine start ECT) (2 trip detection logic)	• Cooling system • Engine coolant temperature sensor • Thermostat

MONITOR DESCRIPTION

The resistance of the ECT sensor varies in proportion to the actual ECT. The ECM supplies a constant voltage to the sensor and monitors the signal output voltage of the sensor. The signal voltage output varies according to the changing resistance of the sensor. After the engine is started, the ECT is monitored through this signal. If the ECT sensor indicates that the engine is not yet warm enough for closed-loop fuel control, despite a specified period of time having elapsed since the engine was started, the ECM interprets this as a malfunction in the sensor or cooling system and sets the DTC.
Example:
The ECT is 0°C (32°F) at engine start. After about 1 minute running time, the ECT sensor still indicates that the engine is not warm enough to begin closed-loop fuel (air-fuel ratio feedback) control. The ECM interprets this as a malfunction in the sensor or cooling system and sets the DTC.

MONITOR STRATEGY

Related DTCs	P0125: Insufficient engine coolant temperature for closed-loop fuel control
Required Sensors/Components (Main)	Engine coolant temperature sensor, thermostat, cooling system
Required Sensors/Components (Related)	-
Frequency of Operation	Once per driving cycle
Duration	61 seconds: Engine coolant temperature at engine start -3.3°C (26°F) or more 109 seconds: Engine coolant temperature at engine start -14.5 to -3.3°C (5.9 to 26°F) 1,200 seconds: Engine coolant temperature at engine start -14.5°C (5.9°F)
MIL Operation	2 driving cycles
Sequence of Operation	None

TYPICAL ENABLING CONDITIONS

Monitor runs whenever following DTCs not present	P0100 - P0103 (MAF meter) P0110 - P0113 (IAT sensor) P0115 - P0118 (ECT sensor)
Thermostat fail	Not detected

TYPICAL MALFUNCTION THRESHOLDS

Time until actual engine coolant temperature reaches closed-loop fuel control enabling temperature	61 seconds: Engine coolant temperature at engine start -3.3°C (26°F) or more 109 seconds: Engine coolant temperature at engine start -14.5 to -3.3°C (5.9 to 26°F) 1,200 seconds: Engine coolant temperature at engine start -14.5°C (5.9°F)

WIRING DIAGRAM

Refer to DTC P0115 (See page ES-110).

INSPECTION PROCEDURE

HINT:

- If any of DTCs P0115, P0116, P0117 or P0118 are set simultaneously with DTC P0125, the Engine Coolant Temperature (ECT) sensor may have an open or a short circuit. Troubleshoot those DTCs first.
- Read freeze frame data using an intelligent tester. Freeze frame data record the engine condition when malfunctions are detected. When troubleshooting, freeze frame data can help determine if the vehicle was moving or stationary, if the engine was warmed up or not, if the air-fuel ratio was lean or rich, and other data, from the time the malfunction occurred.

1 **CHECK ANY OTHER DTCS OUTPUT (IN ADDITION TO DTC P0125)**

(a) Connect an intelligent tester to the DLC3.
(b) Turn the ignition switch ON.
(c) Turn the tester ON.
(d) Select the following menu items: DIAGNOSIS / ENHANCED OBD II / DTC INFO / CURRENT CODES.
(e) Read DTCs.

Result

Display (DTC Output)	Proceed to
P0125	A
P0125 and other DTCs	B

HINT:
If any DTCs other than P0125 are output, troubleshoot those DTCs first.

B → **GO TO DTC CHART (See page ES-57)**

A

2 **INSPECT WATER INLET WITH THERMOSTAT (THERMOSTAT)**

(a) Remove the water inlet with thermostat (See page CO-12).
(b) Check the valve opening temperature of the thermostat.
Standard:
80° to 84°C (176° to 183°F)
HINT:
In addition to the above check, confirm that the valve is completely closed when the temperature is below the standard.
(c) Reinstall the water inlet with thermostat (See page CO-13).

NG → **REPLACE WATER INLET WITH THERMOSTAT (See page CO-12)**

OK

3	CHECK COOLING SYSTEM

(a) Check for defects in the cooling system that might cause the system to be too cold, such as abnormal radiator fan operation or any modifications.

NG → **REPAIR OR REPLACE COOLING SYSTEM**

OK

REPLACE ENGINE COOLANT TEMPERATURE SENSOR (See page ES-424)

DTC	P0128	Coolant Thermostat (Coolant Temperature Below Thermostat Regulating Temperature)

HINT:
This DTC relates to the thermostat.

DESCRIPTION

This DTC is set when the Engine Coolant Temperature (ECT) does not reach 75°C (167°F) despite sufficient engine warm-up time.

DTC No.	DTC Detection Conditions	Trouble Areas
P0128	Conditions (a), (b) and (c) are met for 5 seconds (2 rip detection logic) (a) Cold start (b) Engine warmed up (c) ECT less than 75°C (167°F)	• Thermostat • Cooling system • ECT sensor • ECM

ES

MONITOR DESCRIPTION

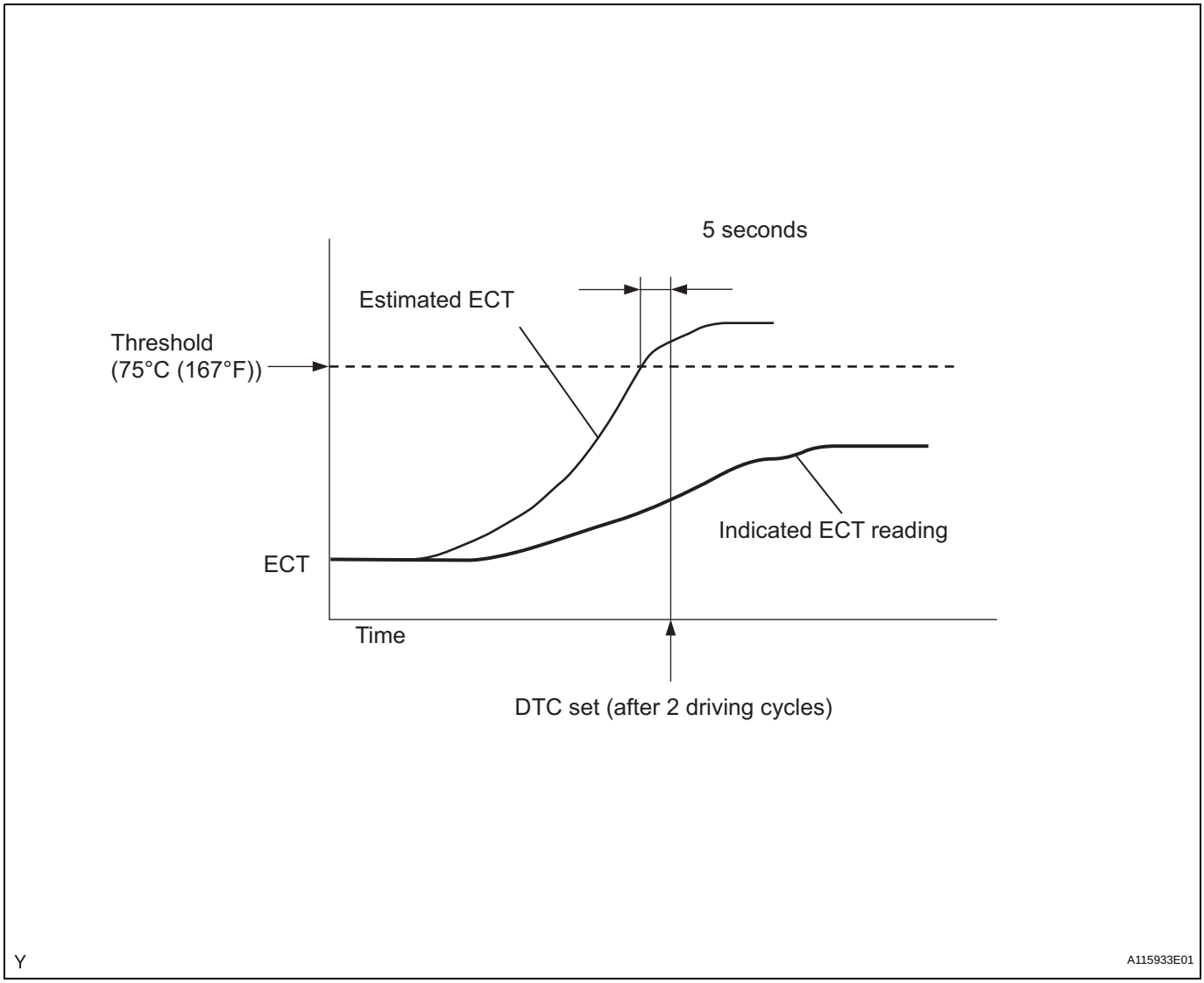

The ECM estimates the ECT based on the starting temperature, engine loads, and engine speeds. The ECM then compares the estimated temperature with the actual ECT. When the estimated ECT reaches 75°C (167°F), the ECM checks the actual ECT. If the actual ECT is less than 75°C (167°F), the ECM interprets this as a malfunction in the thermostat or the engine cooling system and sets the DTC.

MONITOR STRATEGY

Related DTCs	P0128: Coolant Thermostat
Required Sensors/Components (Main)	Engine Coolant Temperature (ECT) sensor, Thermostat
Required Sensors/Components (Related)	Intake Air Temperature (IAT) sensor, Vehicle speed sensor
Frequency of Operation	Once per driving cycle
Duration	900 seconds
MIL Operation	2 driving cycles
Sequence of Operation	None

TYPICAL ENABLING CONDITIONS

ES

Monitor runs whenever following DTCs not present	P0010, P0020 (OCV Bank 1, 2) P0011 (VVT System 1 - Advance) P0012 (VVT System 1 - Retard) P0021 (VVT System 2 - Advance) P0022 (VVT System 2 - Retard) P0031, P0032, P0051, P0052 (A/F sensor heater - Sensor 1) P0100 - P0103 (MAF meter) P0110 - P0113 (IAT sensor) P0115 - P0118 (ECT sensor) P0125 (Insufficient ECT for closed loop) P0171, P0172, P0174, P0175 (Fuel system) P0300 - P0306 (Misfire) P0335 (CKP sensor) P0340 (CMP sensor) P0351 - P0356 (igniter) P0500 (VSS) P2196, P2198 (A/F sensor - rationality) P2A00, P2A03 (A/F sensor - slow response)
Battery voltage	11 V or more
Either of following conditions 1 or 2 met:	-
1. All of following conditions met:	-
(a) ECT at engine start - IAT at engine start	-15° to 7°C (-27° to 12.6°F)
(b) ECT at engine start	-10° to 56°C (14° to 133°F)
(c) IAT at engine start	-10° to 56°C (14° to 133°F)
2. All of following conditions met:	-
(a) ECT at engine start - IAT at engine start	More than 7°C (12.6°F)
(b) ECT at engine start	56°C (133°F) or less
(c) IAT at engine start	-10°C (14°F) or more
Accumulated time with 80 mph (128 km/h) or more of vehicle speed	Less than 20 seconds

TYPICAL MALFUNCTION THRESHOLDS

Duration that following conditions A and B met	5 seconds or more
A. Simulated ECT	75°C (167°F) or more
B. ECT sensor output	Less than 75°C (167°F)

INSPECTION PROCEDURE

HINT:

Read freeze frame data using an intelligent tester. Freeze frame data record the engine condition when malfunctions are detected. When troubleshooting, freeze frame data can help determine if the vehicle was moving or stationary, if the engine was warmed up or not, if the air-fuel ratio was lean or rich, and other data, from the time the malfunction occurred.

1	CHECK ANY OTHER DTCS OUTPUT (IN ADDITION TO DTC P0128)

(a) Connect an intelligent tester to the DLC3.
(b) Turn the ignition switch ON.
(c) Turn the tester ON.
(d) Select the following menu items: DIAGNOSIS / ENHANCED OBD II / DTC INFO / CURRENT CODES.
(e) Read the DTC.

Result

Display (DTC Output)	Proceed to
P0128	A
P0128 and other DTCs	B

HINT:
If any DTCs other than P0128 are output, troubleshoot those DTCs first.

B → **GO TO DTC CHART (See page ES-57)**

A

2	CHECK COOLING SYSTEM

(a) Check for defects in the cooling system that might cause the system to be too cold, such as abnormal radiator fan operation or any modifications.

NG → **REPAIR OR REPLACE COOLING SYSTEM**

OK

3	INSPECT WATER INLET WITH THERMOSTAT (THERMOSTAT)

(a) Remove the water inlet with thermostat (See page CO-12).
(b) Check the valve opening temperature of the thermostat.
Standard:
80° to 84°C (176° to 183°F)
HINT:
In addition to the above check, confirm that the valve is completely closed when the temperature is below the standard.
(c) Reinstall the water inlet with thermostat (See page CO-13).

NG → **REPLACE WATER INLET WITH THERMOSTAT (See page CO-12)**

OK

REPLACE ECM (See page ES-446)

DTC	P0136	Oxygen Sensor Circuit Malfunction (Bank 1 Sensor 2)
DTC	P0137	Oxygen Sensor Circuit Low Voltage (Bank 1 Sensor 2)
DTC	P0138	Oxygen Sensor Circuit High Voltage (Bank 1 Sensor 2)
DTC	P0156	Oxygen Sensor Circuit Malfunction (Bank 2 Sensor 2)
DTC	P0157	Oxygen Sensor Circuit Low Voltage (Bank 2 Sensor 2)
DTC	P0158	Oxygen Sensor Circuit High Voltage (Bank 2 Sensor 2)

ES

HINT:
Sensor 2 refers to the sensor mounted behind the Three-Way Catalytic Converter (TWC) and located far from the engine assembly.

DESCRIPTION

In order to obtain a high purification rate of the carbon monoxide (CO), hydrocarbon (HC) and nitrogen oxide (NOx) components in the exhaust gas, a TWC (Three-Way Catalytic Converter) is used. For the most efficient use of the TWC, the air-fuel ratio must be precisely controlled so that it is always close to the stoichiometric air-fuel level. For the purpose of helping the ECM to deliver accurate air-fuel ratio control, a Heated Oxygen (HO2) sensor is used.
The HO2 sensor is located behind the TWC, and detects the oxygen concentration in the exhaust gas. Since the sensor is integrated with the heater that heats the sensing portion, it is possible to detect the oxygen concentration even when the intake air volume is low (the exhaust gas temperature is low).
When the air-fuel ratio becomes lean, the oxygen concentration in the exhaust gas is rich. The HO2 sensor informs the ECM that the post-TWC air-fuel ratio is lean (low voltage, i.e. less than 0.45 V).
Conversely, when the air-fuel ratio is richer than the stoichiometric air-fuel level, the oxygen concentration in the exhaust gas becomes lean. The HO2 sensor informs the ECM that the post-TWC air-fuel ratio is rich (high voltage, i.e. more than 0.45 V). The HO2 sensor has the property of changing its output voltage drastically when the air-fuel ratio is close to the stoichiometric level.
The ECM uses the supplementary information from the HO2 sensor to determine whether the air-fuel ratio after the TWC is rich or lean, and adjusts the fuel injection time accordingly. Thus, if the HO2 sensor is working improperly due to internal malfunctions, the ECM is unable to compensate for deviations in the primary air-fuel ratio control.

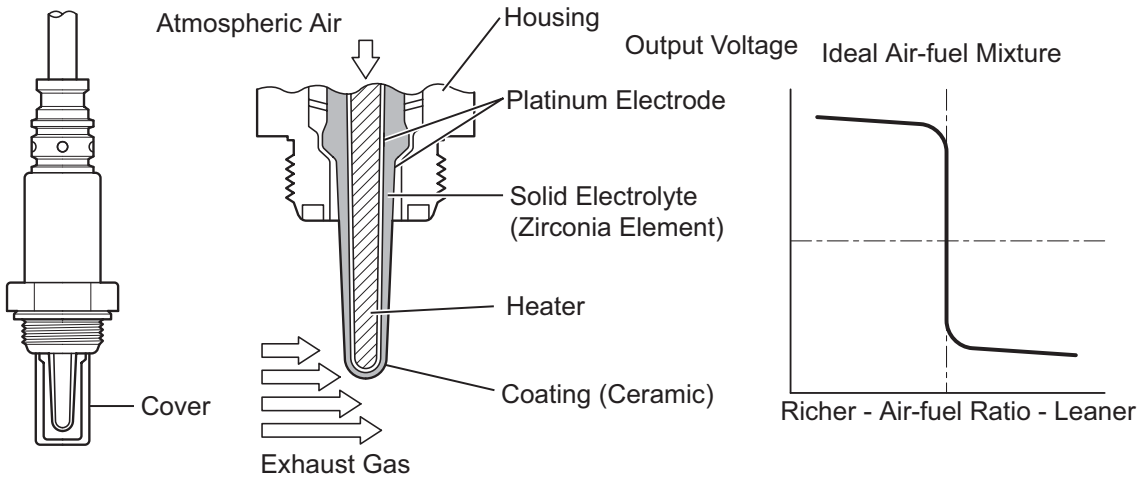

DTC No.	DTC Detection Conditions	Trouble Areas
P0136 P0156	• Abnormal voltage output: During active air-fuel ratio control, following conditions (a) and (b) met for certain period of time (2 trip detection logic) (a) Heated Oxygen (HO2) sensor voltage does not decrease to less than 0.21 V (b) HO2 sensor voltage does not increase to more than 0.59 V • Low impedance: Sensor impedance less than 5 Ω for more than 30 seconds when ECM presumes sensor to being warmed up and operating normally (2 trip detection logic)	• Open or short in HO2 sensor (bank 1, 2 sensor 2) circuit • HO2 sensor (bank 1, 2 sensor 2) • HO2 sensor heater (bank 1, 2 sensor 2) • Air-Fuel Ratio (A/F) sensor (bank 1, 2 sensor 1) • EFI relay • Gas leakage from exhaust system
P0137 P0157	• Low voltage (open): During active air-fuel ratio control, following conditions (a) and (b) met for certain period of time (2 trip detection logic) (a) HO2 sensor voltage output less than 0.21 V (b) Target air-fuel ratio rich • High impedance: Sensor impedance 15 kΩ or more for more than 90 seconds when ECM presumes sensor to being warmed up and operating normally (2 trip detection logic)	• Open in HO2 sensor (bank 1, 2 sensor 2) circuit • HO2 sensor (bank 1, 2 sensor 2) • HO2 sensor heater (bank 1, 2 sensor 2) • EFI relay • Gas leakage from exhaust system
P0138 P0158	• High voltage (short): During active air-fuel ratio control, following conditions (a) and (b) met for certain period of time (2 trip detection logic) (a) HO2 sensor voltage output 0.59 V or more (b) Target air-fuel ratio lean • Extremely high voltage (short): HO2 sensor voltage output exceeds 1.2 V for more than 10 seconds (2 trip detection logic)	• Short in HO2 sensor (bank 1, 2 sensor 2) circuit • HO2 sensor (bank 1, 2 sensor 2) • ECM internal circuit malfunction

MONITOR DESCRIPTION

1. Active Air-Fuel Ratio Control

The ECM usually performs air-fuel ratio feedback control so that the Air-Fuel Ratio (A/F) sensor output indicates a near stoichiometric air-fuel level. This vehicle includes active air-fuel ratio control in addition to regular air-fuel ratio control. The ECM performs active air-fuel ratio control to detect any deterioration in the Three-Way Catalytic Converter (TWC) and Heated Oxygen (HO2) sensor malfunctions (refer to the diagram below).

Active air-fuel ratio control is performed for approximately 15 to 20 seconds while driving with a warm engine. During active air-fuel ratio control, the air-fuel ratio is forcibly regulated to become lean or rich by the ECM. If the ECM detects a malfunction, one of the following DTCs is set: DTC P0136 or P0156 (abnormal voltage output), P0137 or P0157 (open circuit) or P0138 or P0158 (short circuit).

2. Abnormal Voltage Output of HO2 Sensor (DTCs P0136 and P0156)

ES

While the ECM is performing active air-fuel ratio control, the air-fuel ratio is forcibly regulated to become rich or lean. If the sensor is not functioning properly, the voltage output variation is small. For example, when the HO2 sensor voltage does not decrease to less than 0.21 V and does not increase to more than 0.59 V during active air-fuel ratio control, the ECM determines that the sensor voltage output is abnormal and sets DTCs P0136 and P0156.

HO2 SENSOR CIRCUIT MALFUNCTION (P0136 and P0156: ABNORMAL VOLTAGE)

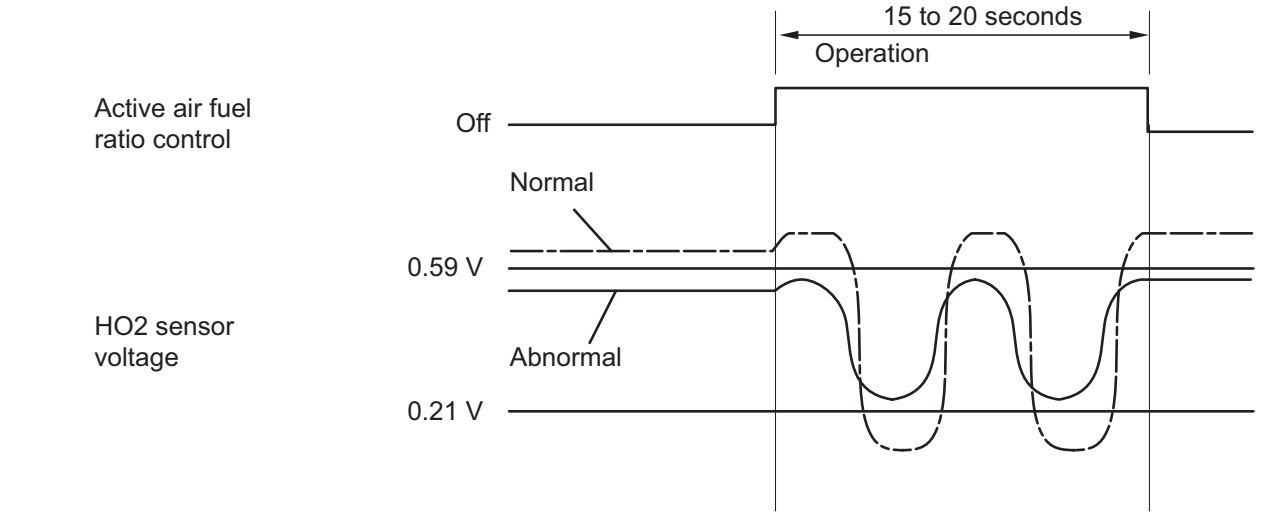

Y

A115540E01

3. Open or Short in Heated Oxygen (HO2) Sensor Circuit (DTCs P0137 and P0157 or P0138 and P0158)

During active air-fuel ratio control, the ECM calculates the Oxygen Storage Capacity (OSC)* of the Three-Way Catalytic Converter (TWC) by forcibly regulating the air-fuel ratio to become rich or lean. If the HO2 sensor has an open or short, or the voltage output of the sensor noticeably decreases, the OSC indicates an extraordinarily high value. Even if the ECM attempts to continue regulating the air-fuel ratio to become rich or lean, the HO2 sensor output does not change.

While performing active air-fuel ratio control, when the target air-fuel ratio is rich and the HO2 sensor voltage output is 0.21 V or less (lean), the ECM interprets this as an abnormally low sensor output voltage and sets DTC P0137 or P0157. When the target air-fuel ratio is lean and the voltage output is 0.59 V or more (rich) during active air-fuel ratio control, the ECM determines that the sensor voltage output is abnormally high, and sets DTC P0138 or P0158.

HINT:

DTC P0138 or P0158 is also set if the HO2 sensor voltage output is more than 1.2 V for 10 seconds or more.

*: The TWC has the capability to store oxygen. The OSC and the emission purification capacity of the TWC are mutually related. The ECM determines whether the catalyst has deteriorated, based on the calculated OSC value (See page ES-210).

HO2 SENSOR CIRCUIT LOW VOLTAGE (P0137 and P0157: OPEN)

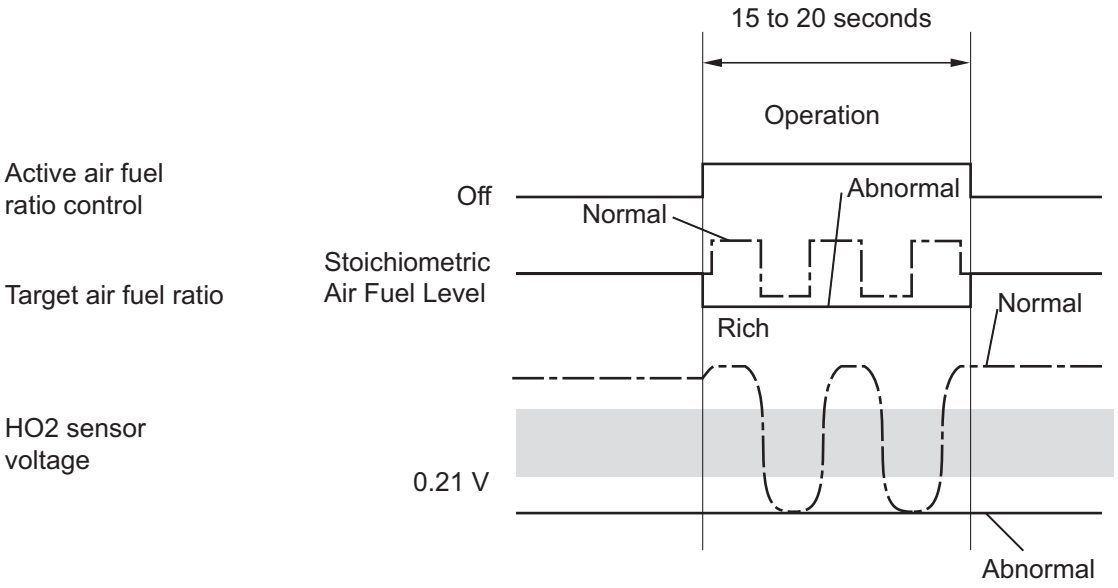

HO2 SENSOR CIRCUIT HIGH VOLTAGE (P0138 and P0158: SHORT)

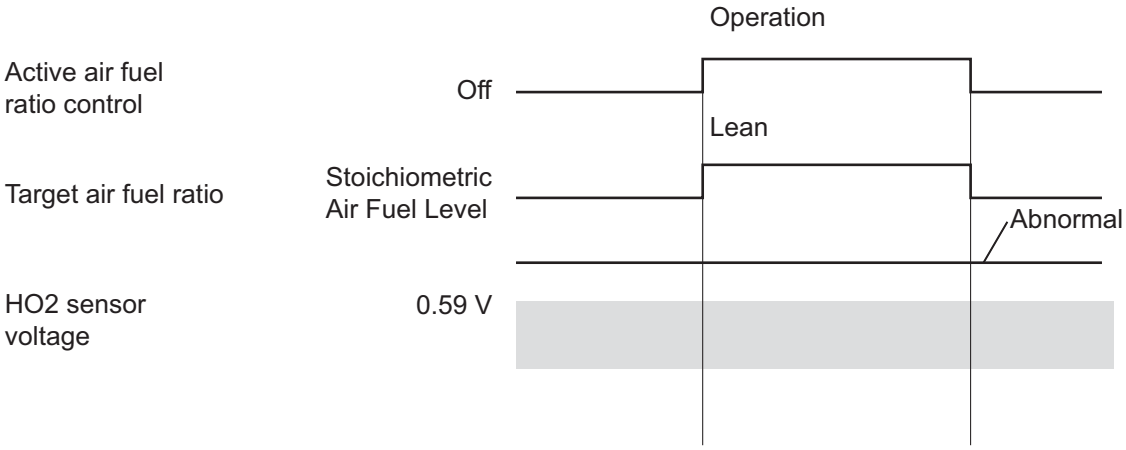

Y

A115541E01

ES

Relationship between element temperature and impedance:

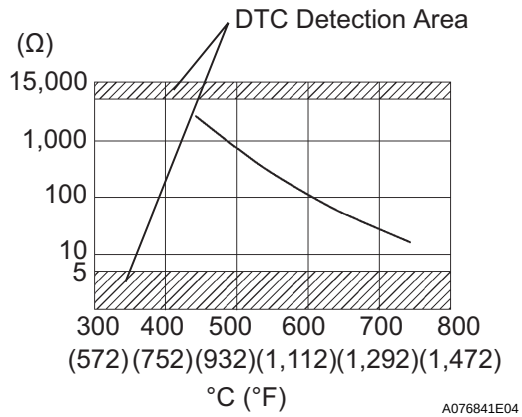

4. High or Low Impedance of Heated Oxygen (HO2) Sensor (DTCs P0136 and P0156 or P0137 and P0157)

During normal air-fuel ratio feedback control, there are small variations in the exhaust gas oxygen concentration. In order to continuously monitor the slight variation of the HO2 sensor signal while the engine is running, the impedance* of the sensor is measured by the ECM. The ECM determines that there is a malfunction in the sensor when the measured impedance deviates from the standard range.

*: The effective resistance in an alternating current electrical circuit.

HINT:

- The impedance cannot be measured using an ohmmeter.
- DTCs P0136 and P0156 indicate the deterioration of the HO2 sensor. The ECM sets the DTCs by calculating the impedance of the sensor when the typical enabling conditions are satisfied (2 driving cycle).
- DTCs P0137 and P0157 indicate an open or short circuit in the HO2 sensor (2 driving cycle). The ECM sets the DTCs when the impedance of the sensor exceeds the threshold 15 kΩ.

MONITOR STRATEGY

Related DTCs	P0136: Heated oxygen sensor output voltage (Output voltage) (bank 1) P0136: Heated oxygen sensor impedance (Low) (bank 1) P0137: Heated oxygen sensor output voltage (Low voltage) (bank 1) P0137: Heated oxygen sensor impedance (High) (bank 1) P0138: Heated oxygen sensor output voltage (High voltage) (bank 1) P0138: Heated oxygen sensor output voltage (Extremely high) (bank 1) P0156: Heated oxygen sensor output voltage (Output voltage) (bank 2) P0156: Heated oxygen sensor impedance (Low) (bank 2) P0157: Heated oxygen sensor output voltage (Low voltage) (bank 2) P0157: Heated oxygen sensor impedance (High) (bank 2) P0158: Heated oxygen sensor output voltage (High voltage) (bank 2) P0158: Heated oxygen sensor impedance (Extremely high) (bank 2)
Required Sensors/Components (Main)	Heated oxygen sensor
Required Sensors/Components (Related)	Crankshaft position sensor, engine coolant temperature sensor, mass air flow meter and throttle position sensor
Frequency of Operation	Once per driving cycle: Active air-fuel ratio control detection Continuous: Others
Duration	20 seconds: Heated oxygen sensor output (Output voltage, High voltage, Low voltage) 30 seconds: Heated oxygen sensor impedance (Low) 90 seconds: Heated oxygen sensor impedance (High) 10 seconds: Heated oxygen sensor voltage (Extremely high)
MIL Operation	2 driving cycles
Sequence of Operation	None

TYPICAL ENABLING CONDITIONS
All:

Monitor runs whenever following DTCs not present	P0031, P0032, P0051, P0052 (A/F sensor heater - Sensor 1) P0037, P0038, P0057, P0058 (O2 sensor heater - Sensor 2) P0100 - P0103 (MAF meter) P0110 - P0113 (IAT sensor) P0115 - P0118 (ECT sensor) P0120 - P0223, P2135 (TP sensor) P0125 (Insufficient ECT for closed loop) P0171, P0172, P0174, P0175 (Fuel system) P0300 - P0306 (Misfire) P0335 (CKP sensor) P0340 (CMP sensor) P0455, P0456 (EVAP System) P0500 (VSS) P2196, P2198 (A/F sensor - rationality) P2A00, P2A03 (A/F sensor - slow response)

Heated Oxygen Sensor Output Voltage (Output Voltage, High Voltage and Low Voltage):

Active air-fuel ratio control	Executing
Active air-fuel ratio control begins when all of following conditions met:	-
Battery voltage	11 V or more
Engine coolant temperature	75 °C (167°F) or more
Idling	OFF
Engine RPM	Less than 3,200 rpm
A/F sensor status	Activated
Fuel system status	Closed loop
Fuel cut	OFF
Engine load	10 to 70 %
Shift position	4 th or more

Heated Oxygen Sensor Impedance (Low):

Battery voltage	11 V or more
Estimated sensor temperature	Less than 700°C (1,292°F)
ECM monitor	Completed
DTC P0606	Not set

Heated Oxygen Sensor Impedance (High):

Battery voltage	11 V or more
Estimated sensor temperature	520°C to 750°C (968°F to 1,382°F)
ECM monitor	Completed
DTC P0606	Not set

Heated Oxygen Sensor Output Voltage (Extremely High):

Battery voltage	11 V or more
Time after engine start	2 seconds or more

TYPICAL MALFUNCTION THRESHOLDS
Heated Oxygen Sensor Output Voltage (Output voltage):

Either of following conditions met:	1 or 2
1. All of following conditions (a), (b) and (c) met	-
(a) Commanded air-fuel ratio	14.3 or less
(b) Rear HO2 sensor voltage	0.21 to 0.59 V
(c) OSC (Oxygen Storage Capacity of Catalyst)	2.5 g or more
2. All of following conditions (d), (e) and (f) met	-

(d) Commanded air-fuel ratio	14.9 or more
(e) Rear HO2 sensor voltage	0.21 to 0.59 V
(f) OSC	2.5 g or more

Heated Oxygen Sensor Output Voltage (Low output voltage):

All of following conditions (a), (b) and (c) met	-
(a) Commanded air-fuel ratio	14.3 or less
(b) Rear HO2 sensor voltage	Less than 0.21 V
(c) OSC (Oxygen Storage Capacity of Catalyst)	2.5 g or more

Heated Oxygen Sensor Output Voltage (High output voltage):

All of following conditions (a), (b) and (c) met	-
(a) Commanded air-fuel ratio	14.9 or more
(b) Rear HO2 sensor voltage	More than 0.59 V
(c) OSC (Oxygen Storage Capacity of Catalyst)	2.5 g or more

Heated Oxygen Sensor Impedance (Low):

Duration of following condition met	30 seconds or more
Heated oxygen sensor impedance	Less than 5 Ω

Heated Oxygen Sensor Impedance (High):

Duration of following condition met	90 seconds or more
Heated oxygen sensor impedance	15 kΩ or more

Heated Oxygen Sensor Output Voltage (Extremely High):

Duration of following condition met	10 seconds or more
Heated oxygen sensor voltage	1.2 V or more

COMPONENT OPERATING RANGE

Duration of following condition met	30 seconds or more
Heated oxygen sensor voltage	Varies between 0.1 V and 0.9 V

MONITOR RESULT

Refer to CHECKING MONITOR STATUS (See page ES-20).

WIRING DIAGRAM

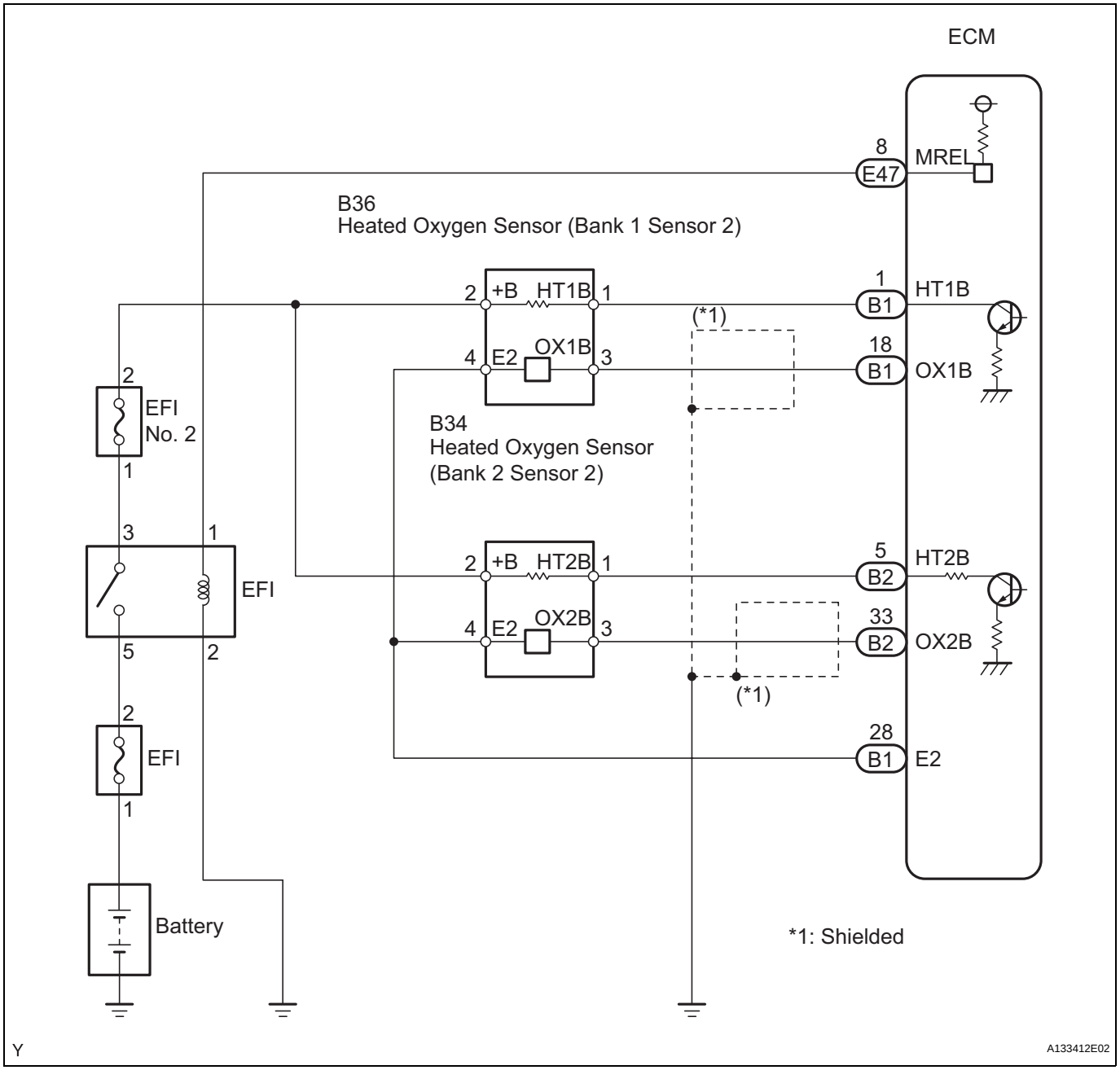

CONFIRMATION DRIVING PATTERN

HINT:

- This confirmation driving pattern is used in the "PERFORM CONFIRMATION DRIVING PATTERN" procedure of the following diagnostic troubleshooting procedure.
- Performing this confirmation driving pattern will activate the Heated Oxygen (HO2) sensor monitor. (The catalyst monitor is performed simultaneously.) This is very useful for verifying the completion of a repair.

NOTICE:

This test will not be completed if the vehicle is driven under absolutely constant speed conditions such as with cruise control activated.

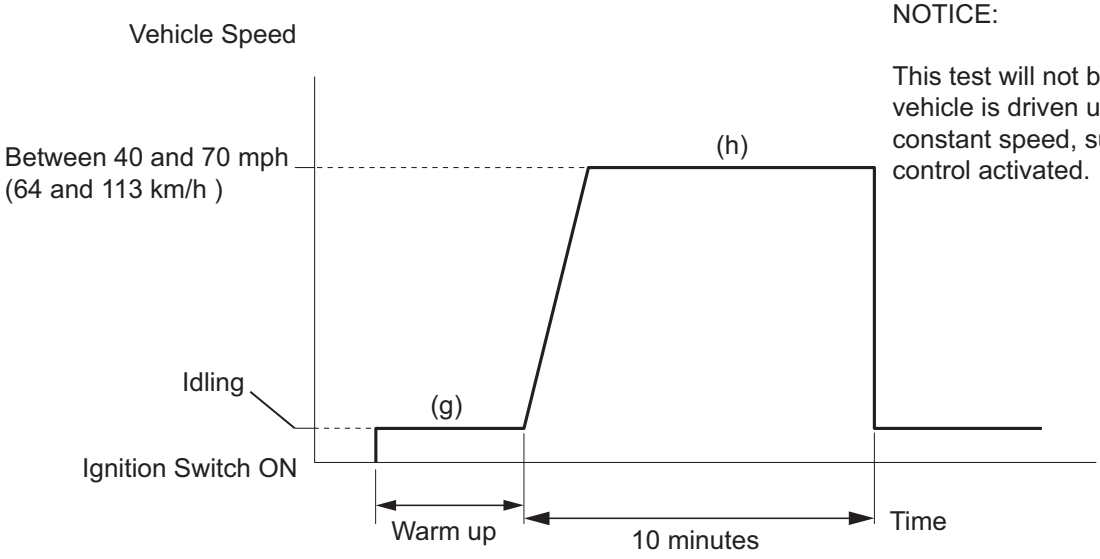

NOTICE:

This test will not be completed if the vehicle is driven under absolutely constant speed, such as with cruise control activated.

(Note: Even when vehicle stops during driving pattern, test can be resumed.)

P

A115372E19

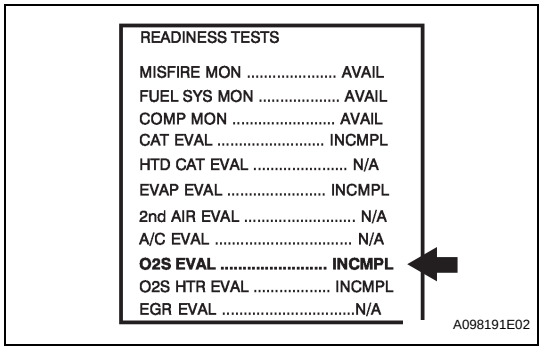

A098191E02

(a) Connect an intelligent tester to the DLC3.
(b) Turn the ignition switch ON.
(c) Turn the tester ON.
(d) Clear DTCs (See page ES-38).
(e) Select the following menu items: DIAGNOSIS / CARB OBD II / READINESS TESTS.
(f) Check that O2S EVAL is INCMPL (incomplete).
(g) Start the engine and warm it up.
(h) Drive the vehicle at between 40 mph and 70 mph (64 km/h and 113 km/h) for at least 10 minutes.
(i) Note the state of the Readiness Tests items. Those items will change to COMPL (complete) as O2S EVAL monitor operates.
(j) Select the following menu items: DIAGNOSIS / ENHANCED OBD II / DTC INFO / PENDING CODES and check if any DTCs (any pending DTCs) are set.
HINT:
If O2S EVAL does not change to COMPL, and any pending DTCs fail to set, extend the driving time.

INSPECTION PROCEDURE

HINT:
Intelligent tester only:
Malfunctioning areas can be identified by performing the A/F CONTROL function provided in the ACTIVE TEST. The A/F CONTROL function can help to determine whether the Air-Fuel Ratio (A/F) sensor, Heated Oxygen (HO2) sensor and other potential trouble areas are malfunctioning.

The following instructions describe how to conduct the A/F CONTROL operation using an intelligent tester.
(1) Connect an intelligent tester to the DLC3.
(2) Start the engine and turn the tester ON.
(3) Warm up the engine at an engine speed of 2,500 rpm for approximately 90 seconds.
(4) Select the following menu items: DIAGNOSIS / ENHANCED OBD II / ACTIVE TEST / A/F CONTROL.
(5) Perform the A/F CONTROL operation with the engine in an idling condition (press the RIGHT or LEFT button to change the fuel injection volume).
(6) Monitor the voltage outputs of the A/F and HO2 sensors (AFS B1S1 and O2S B1S2 or AFS B2S1 and O2S B2S2) displayed on the tester.
HINT:
- The A/F CONTROL operation lowers the fuel injection volume by 12.5 % or increases the injection volume by 25 %.
- Each sensor reacts in accordance with increases and decreases in the fuel injection volume.

Standard

Tester Display (Sensor)	Injection Volumes	Status	Voltages
AFS B1S1 or AFS B2S1 (A/F)	+25 %	Rich	Less than 3.0
AFS B1S1 or AFS B2S1 (A/F)	-12.5 %	Lean	More than 3.35
O2S B1S2 or O2S B2S2 (HO2)	+25 %	Rich	More than 0.55
O2S B1S2 or O2S B2S2 (HO2)	-12.5 %	Lean	Less than 0.4

NOTICE:
The Air-Fuel Ratio (A/F) sensor has an output delay of a few seconds and the Heated Oxygen (HO2) sensor has a maximum output delay of approximately 20 seconds.

Case	A/F Sensor (Sensor 1) Output Voltage		HO2 Sensor (Sensor 2) Output Voltage		Main Suspected Trouble Areas
1	Injection Volume +25 % -12.5 %		Injection Volume +25 % -12.5 %		-
	Output Voltage More than 3.35 V Less than 3.0 V		Output Voltage More than 0.55 V Less than 0.4 V		
2	Injection Volume +25 % -12.5 %		Injection Volume +25 % -12.5 %		• A/F sensor • A/F sensor heater • A/F sensor circuit
	Output Voltage Almost no reaction	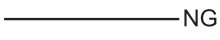	Output Voltage More than 0.55 V Less than 0.4 V		
3	Injection Volume +25 % -12.5 %		Injection Volume +25 % -12.5 %		• HO2 sensor • HO2 sensor heater • HO2 sensor circuit
	Output Voltage More than 3.35 V Less than 3.0 V		Output Voltage Almost no reaction	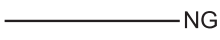	

Case	A/F Sensor (Sensor 1) Output Voltage		HO2 Sensor (Sensor 2) Output Voltage		Main Suspected Trouble Areas
4	Injection volume +25 % -12.5 %		Injection Volume +25 % -12.5 %		• Injector • Fuel pressure • Gas leakage from exhaust system (Air-fuel ratio extremely lean or rich)
	Output Voltage Almost no reaction	 NG	Output Voltage Almost no reaction	 NG	

- Following the A/F CONTROL procedure enables technicians to check and graph the voltage outputs of both the A/F and HO2 sensors.
- To display the graph, select the following menu items on the tester: DIAGNOSIS / ENHANCED OBD II / ACTIVE TEST / A/F CONTROL / USER DATA / AFS B1S1 and O2S B1S2 or AFS B2S1 and O2S B2S2, and press the YES button and then the ENTER button followed by the F4 button.

ES

HINT:

- If other DTCs relating to different systems that have terminal E2 as the ground terminal are output simultaneously, terminal E2 may have an open circuit.
- Read freeze frame data using an intelligent tester. Freeze frame data record the engine condition when malfunctions are detected. When troubleshooting, freeze frame data can help determine if the vehicle was moving or stationary, if the engine was warmed up or not, if the air-fuel ratio was lean or rich, and other data, from the time the malfunction occurred.
- If the OX1B wire from the ECM connector is short-circuited to the +B wire, DTC P0136 will be set.
- If the OX2B wire from the ECM connector is short-circuited to the +B wire, DTC P0156 will be set.

1	READ OUTPUT DTCS

(a) Connect an intelligent tester to the DLC3.
(b) Turn the ignition switch ON and turn the tester ON.
(c) Select the following menu items: DIAGNOSIS / ENHANCED OBD II / DTC INFO / CURRENT CODES.
(d) Read DTCs.

Result

Display (DTC Output)	Proceed To
P0138 or P0158	A
P0137 or P0157	B
P0136 or P0156	C

B → Go to step 14

C → Go to step 7

A

2	READ VALUE USING INTELLIGENT TESTER (OUTPUT VOLTAGE OF HEATED OXYGEN SENSOR)

(a) Connect an intelligent tester to the DLC3.
(b) Turn the ignition switch ON and turn the tester ON.
(c) Select the following menu items: DIAGNOSIS / ENHANCED OBD II / DATA LIST / PRIMARY / O2S B1S2 or O2S B2S2.
(d) Allow the engine to idle.

(e) Read the Heated Oxygen (HO2) sensor output voltage while idling.

Result

HO2 Sensor Output Voltages	Proceed To
More than 1.2 V	A
Less than 1.0 V	B

B → **Go to step 5**

A

3 CHECK HARNESS AND CONNECTOR (CHECK FOR SHORT)

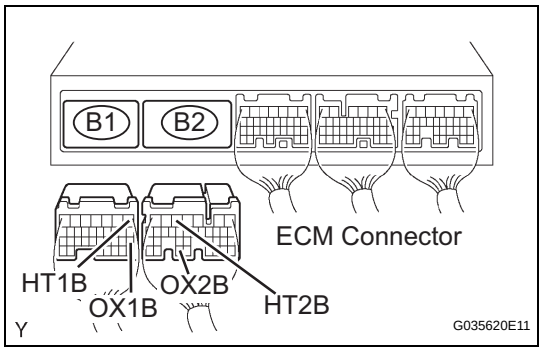

(a) Turn the ignition switch OFF and wait for 5 minutes.
(b) Disconnect the B1 or B2 ECM connector.
(c) Check the resistance.
Standard Resistance

Tester Connections	Specified Conditions
HT1B (B1-1) - OX1B (B1-18)	10 kΩ or higher
HT2B (B2-5) - OX2B (B2-33)	

(d) Reconnect the ECM connector.

NG → **Go to step 4**

OK

REPLACE ECM (See page ES-446)

4 INSPECT HEATED OXYGEN SENSOR (CHECK FOR SHORT)

Component Side:

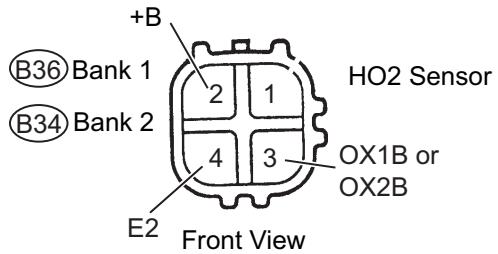

(a) Disconnect the B34 or B36 HO2 sensor connector.
(b) Check the resistance.
Standard Resistance

Tester Connections	Specified Conditions
+B (2) - E2 (4)	10 kΩ or higher
+B (2) - OX1B or OX2B (3)	

(c) Reconnect the HO2 sensor connector.

NG → **REPLACE HEATED OXYGEN SENSOR (See page EC-24)**

OK

REPAIR OR REPLACE HARNESS OR CONNECTOR

5	PERFORM CONFIRMATION DRIVING PATTERN

NEXT

6	CHECK WHETHER DTC OUTPUT RECURS (DTC P0138 OR P0158)

(a) Connect an intelligent tester to the DLC3.
(b) Turn the ignition switch ON and turn the tester ON.
(c) Select the following menu items: DIAGNOSIS / ENHANCED OBD II / DTC INFO / CURRENT CODES.
(d) Read DTCs.

ES

Result

Display (DTC Output)	Proceed To
P0138 or P0158	A
No output	B

B → CHECK FOR INTERMITTENT PROBLEMS

A

REPLACE HEATED OXYGEN SENSOR (See page EC-24)

7	READ VALUE USING INTELLIGENT TESTER (OUTPUT VOLTAGE OF HEATED OXYGEN SENSOR)

(a) Connect an intelligent tester to the DLC3.
(b) Turn the ignition switch ON and turn the tester ON.
(c) Start the engine.
(d) Select the following menu items: DIAGNOSIS / ENHANCED OBD II / DATA LIST / PRIMARY / O2S B1S2 or O2S B2S2.
(e) After warming up the engine, run the engine at an engine speed of 2,500 rpm for 3 minutes.
(f) Read the output voltage of the HO2 sensor when the engine rpm is suddenly increased.
HINT:
Quickly accelerate the engine to 4,000 rpm 3 times using the accelerator pedal.
Standard:
Fluctuates between 0.4 V or less and 0.5 V or more.

NG → Go to step 14

OK

8	PERFORM CONFIRMATION DRIVING PATTERN

NEXT

9	CHECK WHETHER DTC OUTPUT RECURS (DTC P0136 OR P0156)

(a) Connect an intelligent tester to the DLC3.
(b) Turn the ignition switch ON and turn the tester ON.
(c) Select the following menu items: DIAGNOSIS / ENHANCED OBD II / DTC INFO / CURRENT CODES.
(d) Read DTCs.

ES

Result

Display (DTC Output)	Proceed To
P0136 or P0156	A
No output	B

B → CHECK FOR INTERMITTENT PROBLEMS

A

10	REPLACE HEATED OXYGEN SENSOR

Replace the heated oxygen sensor (See page EC-24).

NEXT

11	PERFORM CONFIRMATION DRIVING PATTERN

NEXT

12	CHECK WHETHER DTC OUTPUT RECURS (DTC P0136 OR P0156)

(a) Connect an intelligent tester to the DLC3.
(b) Turn the ignition switch ON and turn the tester ON.
(c) Select the following menu items: DIAGNOSIS / ENHANCED OBD II / DTC INFO / CURRENT CODES.
(d) Read DTCs.

Result

Display (DTC Output)	Proceed To
P0136 or P0156	A
No output	B

B → REPAIR COMPLETED

A

13	PERFORM ACTIVE TEST USING INTELLIGENT TESTER (INJECTION VOLUME)

(a) Connect an intelligent tester to the DLC3.
(b) Start the engine and turn the tester ON.
(c) Warm up the engine.
(d) Select the following menu items: DIAGNOSIS / ENHANCED OBD II / ACTIVE TEST / INJ VOL.
(e) Change the fuel injection volume using the tester, monitoring the voltage output of Air-Fuel Ratio (A/F) and HO2 sensors displayed on the tester.
HINT:
- Change the fuel injection volume within the range of -12 % and +12 %. The injection volume can be changed in 1 % graduations within the range.
- The A/F sensor is displayed as AFS B1S1 or AFS B2S1, and the HO2 sensor is displayed as O2S B1S2 or O2S B2S2, on intelligent testers.

ES

Result

Tester Display (Sensor)	Voltage Variations	Proceed To
AFS B1S1 (A/F) AFS B2S1 (A/F)	Alternates between more and less than 3.3 V	OK
AFS B1S1 (A/F) AFS B2S1 (A/F)	Remains at more than 3.3 V	NG
AFS B1S1 (A/F) AFS B2S1 (A/F)	Remains at less than 3.3 V	NG

HINT:
A normal HO2 sensor voltage (O2S B1S2 or O2S B2S2) reacts in accordance with increases and decreases in fuel injection volumes. When the A/F sensor voltage remains at either less or more than 3.3 V despite the HO2 sensor indicating a normal reaction, the A/F sensor is malfunctioning.

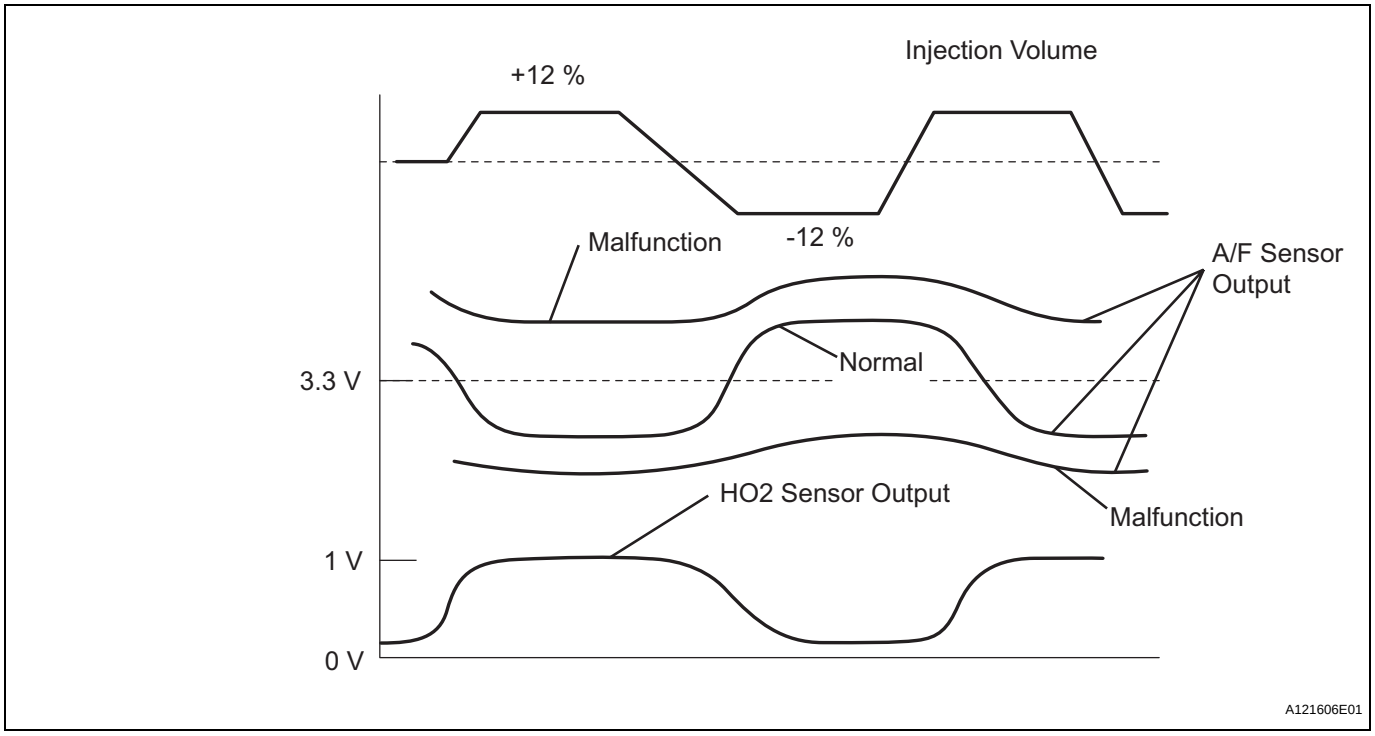

NG → **REPLACE AIR FUEL RATIO SENSOR (See page EC-21)**

OK

CHECK AND REPAIR EXTREMELY RICH OR LEAN ACTUAL AIR FUEL RATIO (INJECTOR, FUEL PRESSURE, GAS LEAKAGE FROM EXHAUST SYSTEM, ETC.)

14	CHECK EXHAUST GAS LEAKAGE

OK:
No gas leakage.

NG → **REPAIR OR REPLACE EXHAUST GAS LEAKAGE POINT**

OK

15 INSPECT HEATED OXYGEN SENSOR (HEATER RESISTANCE)

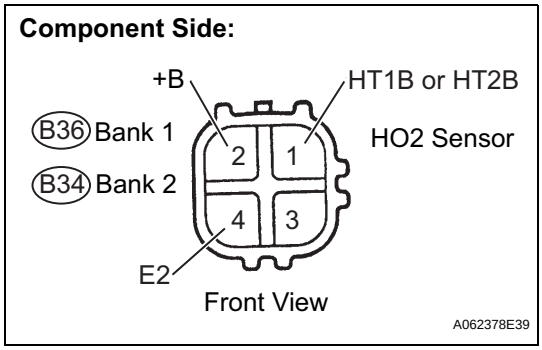

(a) Disconnect the B34 or B36 HO2 sensor connector.
(b) Measure the resistance between the terminals of the HO2 sensor connector.

Standard Resistance

Tester Connections	Specified Conditions
HT1B or HT2B (1) - +B (2)	11 to 16 Ω at 20°C (68°F)
HT1B or HT2B (1) - E2 (4)	10 kΩ or higher

(c) Reconnect the HO2 sensor connector.

NG → **REPLACE HEATED OXYGEN SENSOR (See page EC-24)**

OK

16 INSPECT EFI RELAY

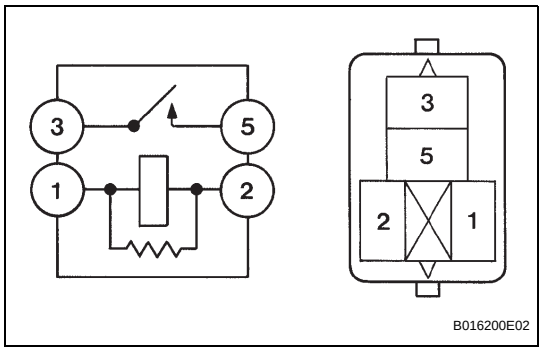

(a) Remove the EFI relay from the engine room R/B.
(b) Check the EFI relay resistance.

Standard Resistance

Terminal Connections	Specified Conditions
3 - 5	10 kΩ or higher
	Below 1 Ω (when battery voltage applied to terminals 1 and 2)

(c) Reinstall the EFI relay.

NG → **REPLACE EFI RELAY**

OK

17 CHECK HARNESS AND CONNECTOR (HEATED OXYGEN SENSOR - ECM)

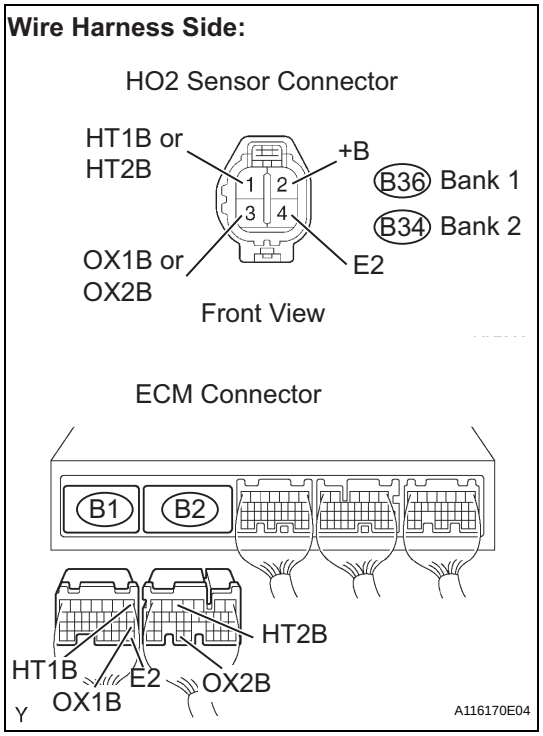

(a) Disconnect the B34 or B36 HO2 sensor connector.
(b) Turn the ignition switch ON.
(c) Measure the voltage between the +B terminal of the HO2 sensor connector and body ground.

Standard Voltage

Terminal Connections	Specified Conditions
+B (B36-2) - Body ground	11 to 14 V
+B (B34-2) - Body ground	

(d) Turn the ignition switch OFF.
(e) Disconnect the B1 and B2 ECM connectors.
(f) Check the resistance.

Standard Resistance (Check for open)

Terminal Connections	Specified Conditions
HT1B (B36-1) - HT1B (B1-1)	Below 1 Ω
OX1B (B36-3) - OX1B (B1-18)	
E2 (B36-4) - E2 (B1-28)	
HT2B (B34-1) - HT2B (B2-5)	
OX2B (B34-3) - OX2B (B2-33)	
E2 (B34-4) - E2 (B1-28)	

Standard Resistance (Check for short)

Terminal Connections	Specified Conditions
HT1B (B36-1) or HT1B (B1-1) - Body ground	10 kΩ or higher
OX1B (B36-3) or OX1B (B1-18) - Body ground	
HT2B (B34-1) or HT2B (B2-5) - Body ground	
OX2B (B34-3) or OX2B (B2-33) - Body ground	

(g) Reconnect the HO2 sensor connector.
(h) Reconnect the ECM connectors.

ES

Reference (System Diagram of Bank 1 Sensor 2):

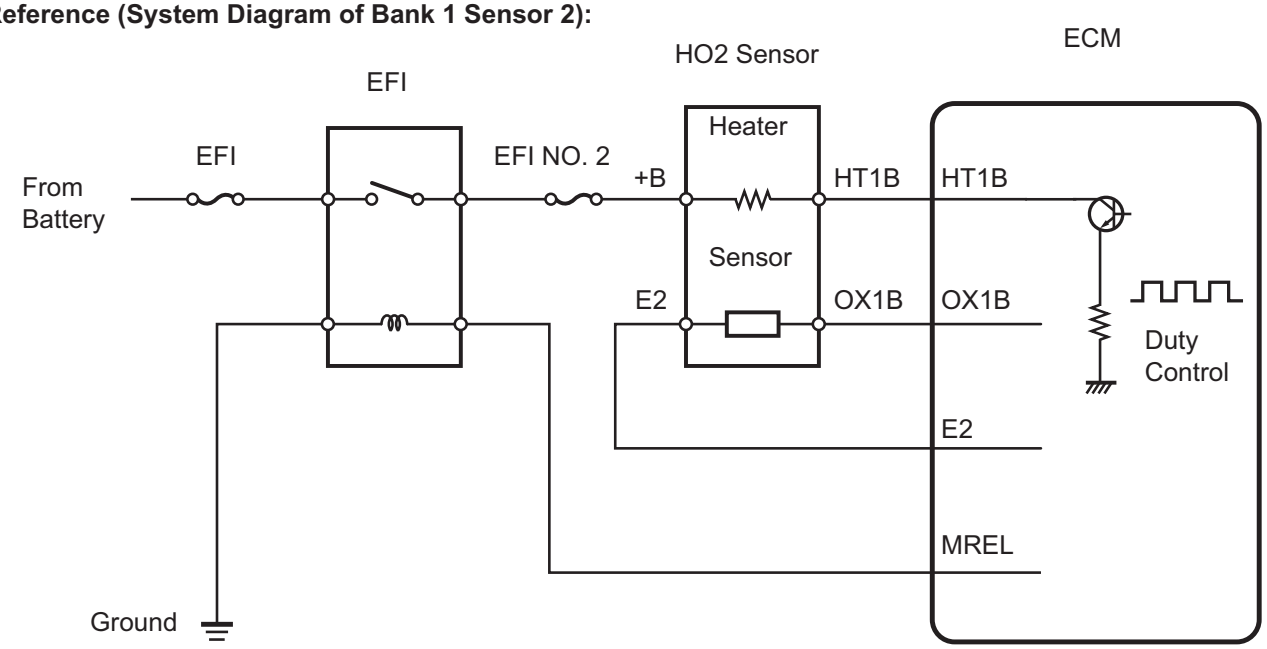

ES

NG → **REPAIR OR REPLACE HARNESS OR CONNECTOR**

OK

REPLACE HEATED OXYGEN SENSOR (See page EC-24)

DTC	P0171	System Too Lean (Bank 1)

DTC	P0172	System Too Rich (Bank 1)

DTC	P0174	System Too Lean (Bank 2)

DTC	P0175	System Too Rich (Bank 2)

DESCRIPTION

The fuel trim is related to the feedback compensation value, not to the basic injection time. The fuel trim consists of both the short-term and long-term fuel trims.

The short-term fuel trim is fuel compensation that is used to constantly maintain the air-fuel ratio at stoichiometric levels. The signal from the Air-Fuel Ratio (A/F) sensor indicates whether the air-fuel ratio is rich or lean compared to the stoichiometric ratio. This triggers a reduction in the fuel injection volume if the air-fuel ratio is rich and an increase in the fuel injection volume if it is lean.

Factors such as individual engine differences, wear over time and changes in operating environment cause short-term fuel trim to vary from the central value. The long-term fuel trim, which controls overall fuel compensation, compensates for long-term deviations in the fuel trim from the central value caused by the short- term fuel trim compensation.

If both the short-term and long-term fuel trims are lean or rich beyond predetermined values, it is interpreted as a malfunction, and the ECM illuminates the MIL and sets a DTC.

DTC No.	DTC Detection Conditions	Trouble Areas
P0171 P0174	With warm engine and stable air-fuel ratio feedback, fuel trim considerably in error to lean side (2 trip detection logic)	• Air induction system • Injector blockage • Mass Air Flow (MAF) meter • Engine Coolant Temperature (ECT) sensor • Fuel pressure • Gas leakage from exhaust system • Open or short in A/F sensor (bank 1, 2 sensor 1) circuit • A/F sensor (bank 1, 2 sensor 1) • A/F sensor heater (bank 1, 2 sensor 1) • A/F sensor heater relay • A/F sensor heater and A/F sensor heater relay circuits • PCV valve and hose • PCV hose connections • ECM
P0172 P0175	With warm engine and stable air-fuel ratio feedback, fuel trim considerably in error to rich side (2 trip detection logic)	• Injector leakage or blockage • MAF meter • ECT sensor • Ignition system • Fuel pressure • Gas leakage from exhaust system • Open or short in A/F sensor (bank 1, 2 sensor 1) circuit • A/F sensor (bank 1, 2 sensor 1) • A/F sensor heater (bank 1, 2 sensor 1) • A/F sensor heater relay • A/F sensor heater and A/F sensor heater relay circuits • ECM

HINT:

- When DTC P0171 or P0174 is set, the actual air-fuel ratio is on the lean side. When DTC P0172 or P0175 is set, the actual air-fuel ratio is on the rich side.
- If the vehicle runs out of fuel, the air-fuel ratio is lean and DTC P0171 or P0174 may be set. The MIL is then illuminated.
- When the total of the short-term and long-term fuel trim values is within the malfunction threshold (and the engine coolant temperature is more than 75°C [167°F]), the system is functioning normally.

MONITOR DESCRIPTION

Under closed-loop fuel control, fuel injection volumes that deviate from those estimated by the ECM cause changes in the long-term fuel trim compensation value. The long-term fuel trim is adjusted when there are persistent deviations in the short-term fuel trim values. Deviations from the ECM's estimated fuel injection volumes also affect the average fuel trim learning value, which is a combination of the average short-term fuel trim (fuel feedback compensation value) and the average long-term fuel trim (learning value of the air- fuel ratio). If the average fuel trim learning value exceeds the malfunction thresholds, the ECM interprets this a fault in the fuel system and sets a DTC.
Example:
The average fuel trim learning value is more than +35 % or less than -35 %, the ECM interprets this as a fuel system malfunction.

ES

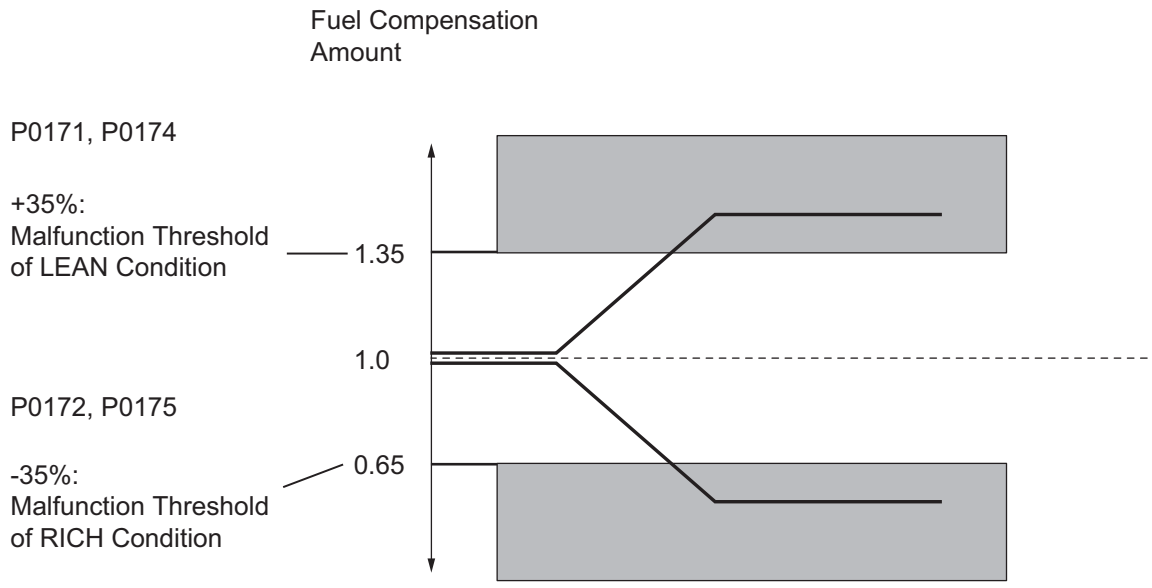

MONITOR STRATEGY

Related DTCs	P0171: Fuel trim Lean (bank 1) P0172: Fuel trim Rich (bank 1) P0174: Fuel trim Lean (bank 2) P0175: Fuel trim Rich (bank 2)
Required Sensors/Components (Main)	Fuel system
Required Sensors/Components (Related)	A/F sensor, Mass air flow meter, Crankshaft position sensor
Frequency of Operation	Continuous
Duration	Within 10 seconds
MIL Operation	2 driving cycles
Sequence of Operation	None

TYPICAL ENABLING CONDITIONS

Fuel-trim:

Monitor runs whenever following DTCs not present	P0010, P0020 (OCV Bank 1, 2) P0011 (VVT System 1 - Advance) P0012 (VVT System 1 - Retard) P0021 (VVT System 2 - Advance) P0022 (VVT System 2 - Retard) P0031, P0032, P0051, P0052 (A/F sensor heater - Sensor 1) P0100 - P0103 (MAF meter) P0115 - P0118 (ECT sensor) P0120 - P0223, P2135 (TP sensor) P0125 (Insufficient ECT for closed loop) P0335 (CKP sensor) P0340 (CMP sensor) P0351 - P0356 (Igniter) P0500 (VSS)
Fuel system status	Closed-loop
Battery voltage	11 V or more
Either of following conditions 1 or 2 set	-
1. Engine RPM	Below 1,100 rpm
2. Intake air amount per revolution	0.22 g/rev or more
Catalyst monitor	No executed

ES

TYPICAL MALFUNCTION THRESHOLDS

Fuel-trim:

Purge-cut	Executing
Either of following conditions 1 or 2 met	-
1. Average between short-term fuel trim and long-term fuel trim	35 % or more (varies with ECT)
2. Average between short-term fuel trim and long-term fuel trim	-35 % or less (varies with ECT)

WIRING DIAGRAM

Refer to DTC P2195 (See page ES-312).

INSPECTION PROCEDURE

HINT:

Intelligent tester only:

Malfunctioning areas can be identified by performing the A/F CONTROL function provided in the ACTIVE TEST. The A/F CONTROL function can help to determine whether the Air-Fuel Ratio (A/F) sensor, Heated Oxygen (HO2) sensor and other potential trouble areas are malfunctioning.

The following instructions describe how to conduct the A/F CONTROL operation using an intelligent tester.

(1) Connect an intelligent tester to the DLC3.

(2) Start the engine and turn the tester ON.

(3) Warm up the engine at an engine speed of 2,500 rpm for approximately 90 seconds.

(4) Select the following menu items: DIAGNOSIS / ENHANCED OBD II / ACTIVE TEST / A/F CONTROL.

(5) Perform the A/F CONTROL operation with the engine in an idling condition (press the RIGHT or LEFT button to change the fuel injection volume).

(6) Monitor the voltage outputs of the A/F and HO2 sensors (AFS B1S1 and O2S B1S2 or AFS B2S1 and O2S B2S2) displayed on the tester.

HINT:

- The A/F CONTROL operation lowers the fuel injection volume by 12.5 % or increases the injection volume by 25 %.

- Each sensor reacts in accordance with increases and decreases in the fuel injection volume.

Standard

Tester Display (Sensor)	Injection Volumes	Status	Voltages
AFS B1S1 or AFS B2S1 (A/F)	+25 %	Rich	Less than 3.0
AFS B1S1 or AFS B2S1 (A/F)	-12.5 %	Lean	More than 3.35
O2S B1S2 or O2S B2S2 (HO2)	+25 %	Rich	More than 0.55
O2S B1S2 or O2S B2S2 (HO2)	-12.5 %	Lean	Less than 0.4

ES

NOTICE:
The Air-Fuel Ratio (A/F) sensor has an output delay of a few seconds and the Heated Oxygen (HO2) sensor has a maximum output delay of approximately 20 seconds.

Case	A/F Sensor (Sensor 1) Output Voltage		HO2 Sensor (Sensor 2) Output Voltage		Main Suspected Trouble Areas
1	Injection volume +25 % -12.5 %		Injection volume +25 % -12.5 %		-
	Output voltage More than 3.35 V Less than 3.0 V		Output voltage More than 0.55 V Less than 0.4 V		
2	Injection volume +25 % -12.5 %		Injection volume +25 % -12.5 %		• A/F sensor • A/F sensor heater • A/F sensor circuit
	Output voltage Almost no reaction		Output voltage More than 0.55 V Less than 0.4 V		
3	Injection volume +25 % -12.5 %		Injection volume +25 % -12.5 %		• HO2 sensor • HO2 sensor heater • HO2 sensor circuit
	Output voltage More than 3.35 V Less than 3.0 V		Output voltage Almost no reaction	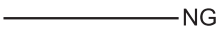	
4	Injection volume +25 % -12.5 %		Injection volume +25 % -12.5 %		• Injector • Fuel pressure • Gas leakage from exhaust system (Air-fuel ratio extremely lean or rich)
	Output voltage Almost no reaction	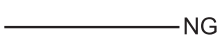	Output voltage Almost no reaction	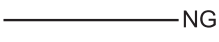	

- Following the A/F CONTROL procedure enables technicians to check and graph the voltage outputs of both the A/F and HO2 sensors.
- To display the graph, select the following menu items on the tester: DIAGNOSIS / ENHANCED OBD II / ACTIVE TEST / A/F CONTROL / USER DATA / AFS B1S1 and O2S B1S2 or AFS B2S1 and O2S B2S2, and press the YES button and then the ENTER button followed by the F4 button.

HINT:

- Read freeze frame data using an intelligent tester. Freeze frame data record the engine condition when malfunctions are detected. When troubleshooting, freeze frame data can help determine if the vehicle was moving or stationary, if the engine was warmed up or not, if the air-fuel ratio was lean or rich, and other data, from the time the malfunction occurred.

- A low A/F sensor voltage could be caused by a rich air-fuel mixture. Check for conditions that would cause the engine to run rich.
- A high A/F sensor voltage could be caused by a lean air-fuel mixture. Check for conditions that would cause the engine to run lean.

1	**CHECK ANY OTHER DTCS OUTPUT (IN ADDITION TO DTC P0171, P0172, P0174 OR P0175)**

(a) Connect an intelligent tester to the DLC3.
(b) Turn the ignition switch ON and turn the tester ON.
(c) Select the following menu items: DIAGNOSIS / ENHANCED OBD II / DTC INFO / CURRENT CODES.
(d) Read DTCs.

Result

Display (DTC Output)	Proceed To
P0171, P0172, P0174 or P0175	A
P0171, P0172, P0174 or P0175 and other DTCs	B

HINT:
If any DTCs other than P0171, P0172, P0174 or P0175 are output, troubleshoot those DTCs first.

B → **GO TO DTC CHART (See page ES-57)**

A

2	**CHECK PCV HOSE CONNECTIONS**

OK:
PCV hose is connected correctly and is not damaged.

NG → **REPAIR OR REPLACE PCV HOSE**

OK

3	**CHECK AIR INDUCTION SYSTEM**

(a) Check the air induction system for vacuum leakage.
OK:
No leakage from air induction system.

NG → **REPAIR OR REPLACE AIR INDUCTION SYSTEM**

OK

4	**PERFORM ACTIVE TEST USING INTELLIGENT TESTER (A/F CONTROL)**

(a) Connect an intelligent tester to the DLC3.
(b) Start the engine and turn the tester ON.
(c) Warm up the engine at an engine speed of 2,500 rpm for approximately 90 seconds.
(d) Select the following menu items: DIAGNOSIS / ENHANCED OBD II / ACTIVE TEST / A/F CONTROL.

(e) Perform the A/F CONTROL operation with the engine in an idling condition (press the RIGHT or LEFT button to change the fuel injection volume).

(f) Monitor the voltage outputs of A/F and HO2 sensors (AFS B1S1 and O2S B1S2 or AFS B2S1 and O2S B2S2) displayed on the tester.

HINT:

- The A/F CONTROL operation lowers the fuel injection volume by 12.5 % or increases the injection volume by 25 %.
- Each sensor reacts in accordance with increases and decreases in the fuel injection volume.

ES

Standard

Tester Display (Sensor)	Injection Volumes	Status	Voltages
AFS B1S1 or AFS B2S1 (A/F)	+25 %	Rich	Less than 3.0
AFS B1S1 or AFS B2S1 (A/F)	-12.5 %	Lean	More than 3.35
O2S B1S2 or O2S B2S2 (HO2)	+25 %	Rich	More than 0.55
O2S B1S2 or O2S B2S2 (HO2)	-12.5 %	Lean	Less than 0.4

Result:

Status AFS B1S1 or AFS B2S1	Status O2S B1S2 or O2S B2S2	A/F Condition and A/F Sensor Condition	Misfires	Suspected Trouble Areas	Proceed To
Lean/Rich	Lean/Rich	Normal	-	-	C
Lean	Lean	Actual air-fuel ratio lean	May occur	• PCV valve and hose • PCV hose connections • Injector blockage • Gas leakage from exhaust system • Air induction system • Fuel pressure • Mass Air Flow (MAF) meter • Engine Coolant Temperature (ECT) sensor	A
Rich	Rich	Actual air-fuel ratio rich	-	• Injector blockage or blockage • Gas leakage from exhaust system • Ignition system • Fuel pressure • MAF meter • ECT sensor	
Lean	Lean/Rich	A/F sensor malfunction	-	• A/F sensor	B
Rich	Lean/Rich	A/F sensor malfunction	-	• A/F sensor	

Lean: During A/F CONTROL, the A/F sensor output voltage (AFS) is consistently more than 3.35 V, and the HO2 sensor output voltage (O2S) is consistently less than 0.4 V.

Rich: During A/F CONTROL, the AFS is consistently less than 3.0 V, and the O2S is consistently more than 0.55 V.

Lean/Rich: During A/F CONTROL of the ACTIVE TEST, the output voltage of the heated oxygen sensor alternates correctly.

B → **Go to step 11**

C → Go to step 15

A

5	READ VALUE USING INTELLIGENT TESTER (COOLANT TEMP)

(a) Connect an intelligent tester to the DLC3.
(b) Turn the ignition switch ON and turn the tester ON.
(c) Select the following menu items: DIAGNOSIS / ENHANCED OBD II / DATA LIST / PRIMARY / COOLANT TEMP.
(d) Read the COOLANT TEMP twice, when the engine is both cold and warmed up.
Standard:
With cold engine: Same as ambient air temperature.
With warm engine: 80°C to 100°C (176°C to 212°F).

ES

NG → **REPLACE ENGINE COOLANT TEMPERATURE SENSOR (See page ES-424)**

OK

6	READ VALUE USING INTELLIGENT TESTER (MAF)

(a) Connect an intelligent tester to the DLC3.
(b) Turn the ignition switch ON and turn the tester ON.
(c) Select the following menu items: DIAGNOSIS / ENHANCED OBD II / DATA LIST / PRIMARY / MAF and COOLANT TEMP.
(d) Allow the engine to idle until the COOLANT TEMP reaches 75°C (167°F) or more.
(e) Read the MAF with the engine in an idling condition and at an engine speed of 2,500 rpm.
Standard:
MAF while engine idling: 3.2 to 4.7 g/sec (shift position: N, A/C: OFF).
MAF at engine speed of 2,500 rpm: 13.1 to 18.9 g/sec (shift position: N, A/C: OFF).

NG → **REPLACE MASS AIR FLOW METER (See page ES-409)**

OK

7	CHECK FUEL PRESSURE

(a) Check the fuel pressure (See page FU-6).

NG → **REPAIR OR REPLACE FUEL SYSTEM**

OK

8	CHECK EXHAUST GAS LEAKAGE

OK:
No gas leakage.

NG → **REPAIR OR REPLACE EXHAUST SYSTEM**

OK

9	CHECK SPARK AND IGNITION

ES

HINT:
If the spark plugs or ignition system malfunctions, engine misfire may occur. The misfire count can be read using an intelligent tester. Select the following menu items: DIAGNOSIS / ENHANCED OBD II / DATA LIST / PRIMARY / CYL #1 (to CYL #6).

NG → **REPAIR OR REPLACE IGNITION SYSTEM**

OK

10	INSPECT FUEL INJECTOR ASSEMBLY (INJECTION AND VOLUME)

HINT:
If the injectors malfunction, engine misfire may occur. The misfire count can be read using an intelligent tester. Select the following menu items: DIAGNOSIS / ENHANCED OBD II / DATA LIST / PRIMARY / CYL #1 (to CYL #6).

NG → **REPLACE FUEL INJECTOR ASSEMBLY (See page FU-11)**

OK

11	INSPECT AIR FUEL RATIO SENSOR (HEATER RESISTANCE)

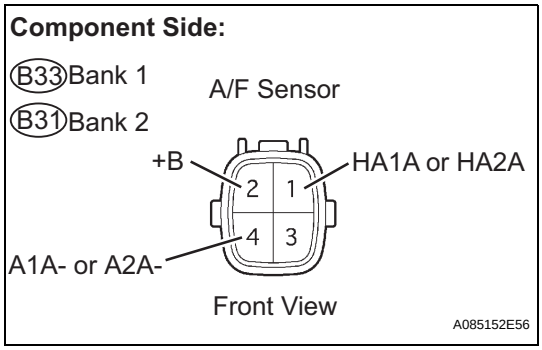

(a) Disconnect the B31 or B33 A/F sensor connector.
(b) Measure the resistance between the terminals of the A/F sensor connector.

Standard Resistance (Bank 1 Sensor 1)

Tester Connections	Specified Conditions
HA1A (1) - +B (2)	1.8 Ω to 3.4 Ω at 20°C (68°F)
HA1A (1) - A1A- (4)	10 kΩ or higher

Standard Resistance (Bank 2 Sensor 1)

Tester Connections	Specified Conditions
HA2A (1) - +B (2)	1.8 Ω to 3.4 Ω at 20°C (68°F)
HA2A (1) - A2A- (4)	10 kΩ or higher

(c) Reconnect the A/F sensor connector.

NG → REPLACE AIR FUEL RATIO SENSOR (See page EC-21)

OK

12 INSPECT AIR FUEL RATIO SENSOR HEATER RELAY

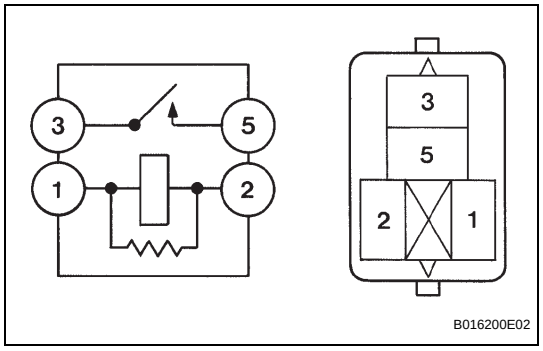

(a) Remove the A/F sensor heater relay from the engine room R/B.
(b) Check the A/F sensor heater relay resistance.

Standard Resistance

Tester Connections	Specified Conditions
3 - 5	10 kΩ or higher
	Below 1 Ω (when battery voltage applied to terminals 1 and 2)

(c) Reinstall the A/F sensor heater relay.

NG → REPLACE AIR FUEL RATIO SENSOR HEATER RELAY

OK

13 CHECK HARNESS AND CONNECTOR (A/F SENSOR - ECM)

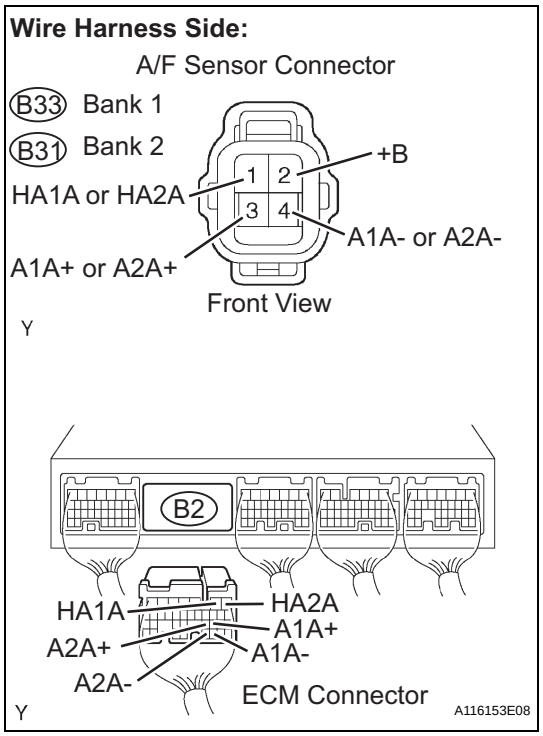

(a) Disconnect the B31 or B33 A/F sensor connector.
(b) Turn the ignition switch ON.
(c) Measure the voltage between the +B terminal of the A/F sensor connector and body ground.

Standard Voltage

Tester Connections	Specified Conditions
+B (B33-2) - Body ground	11 to 14 V
+B (B31-2) - Body ground	

(d) Turn the ignition switch OFF.
(e) Disconnect the B2 ECM connector.
(f) Check the resistance.

Standard Resistance (Check for open)

Tester Connections	Specified Conditions
HA1A (B33-1) - HA1A (B2-2)	Below 1 Ω
A1A+ (B33-3) - A1A+ (B2-22)	
A1A- (B33-4) - A1A- (B2-30)	
HA2A (B31-1) - HA2A (B2-1)	
A2A+ (B31-3) - A2A+ (B2-23)	
A2A- (B31-4) - A2A- (B2-31)	

Standard Resistance (Check for short)

Tester Connections	Specified Conditions
HA1A (B33-1) or HA1A (B2-2) - Body ground	10 kΩ or higher
A1A+ (B33-3) or A1A+ (B2-22) - Body ground	
A1A- (B33-4) or A1A- (B2-30) - Body ground	
HA2A (B31-1) or HA2A (B2-1) - Body ground	
A2A+ (B31-3) or A2A+ (B2-23) - Body ground	
A2A- (B31-4) or A2A- (B2-31) - Body ground	

(g) Reconnect the ECM connector.
(h) Reconnect the A/F sensor connector.

ES

Reference (System Diagram of Bank 1 Sensor 1):

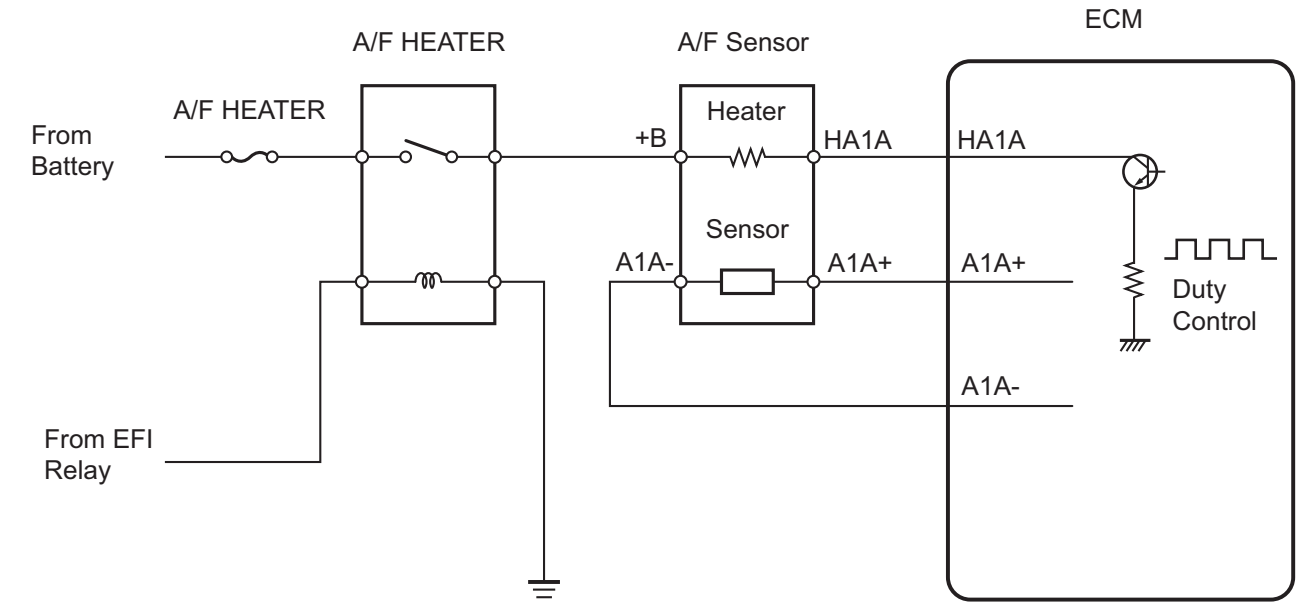

NG → **REPAIR OR REPLACE HARNESS OR CONNECTOR**

OK

14	REPLACE AIR FUEL RATIO SENSOR

(a) Replace the A/F sensor (See page EC-21).

NEXT

15	PERFORM CONFIRMATION DRIVING PATTERN

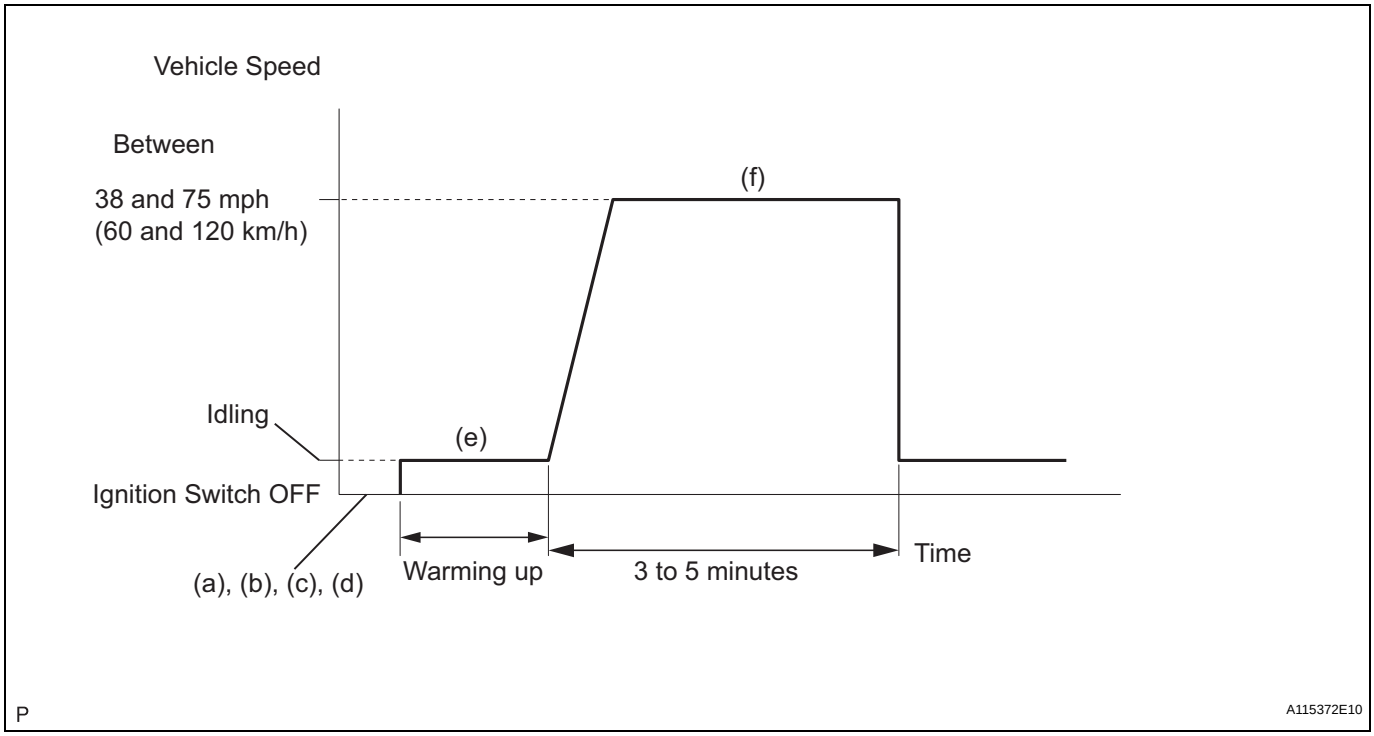

(a) Connect an intelligent tester to the DLC3.
(b) Turn the ignition switch ON and turn the tester ON.
(c) Clear DTCs (See page ES-38).
(d) Switch the ECM from normal mode to check mode using the tester (See page ES-42).
(e) Start the engine and warm it up with all the accessories switched OFF.
(f) Drive the vehicle at between 38 mph and 75 mph (60 km/h and 120 km/h) and at an engine speed of between 1,400 rpm and 3,200 rpm for 3 to 5 minutes.
HINT:
If the system is still malfunctioning, the MIL will be illuminated during step (f).
NOTICE:
If the conditions in this test are not strictly followed, no malfunction will be detected.

NEXT

16	CHECK WHETHER DTC OUTPUT RECURS (DTC P0171, P0172, P0174 OR P0175)

(a) Connect an intelligent tester to the DLC3.
(b) Turn the ignition switch ON and turn the tester ON.
(c) Select the following menu items: DIAGNOSIS / ENHANCED OBD II / DTC INFO / CURRENT CODES.
(d) Read DTCS.

Result

Display (DTC Output)	Proceed To
No output	A
P0171, P0172, P0174 or P0175	B

B → Go to step 5

A

END

DTC	P0230	Fuel Pump Primary Circuit

DESCRIPTION

As shown in the illustration, when the engine is cranked, current flows from terminal ST1 of the ignition switch into the ECM and the ST (starter) relay coil and also current flows to terminal STA of the ECM (STA signal).

When the STA signal and NE signal are input to the ECM, Tr1 (power transistor 1) is turned ON, current flows to the coil of the circuit opening relay, the relay switches on, power is supplied to the fuel pump, and the fuel pump operates.

While the NE signal is generated (engine running), the ECM keeps the Tr1 ON (circuit opening relay ON) and the fuel pump also keeps operating.

The fuel pump speed is controlled at two levels (high speed or low speed) by engine condition (starting, light load, heavy load). When the engine starts (STA ON), Tr2 (power transistor 2) in the ECM is OFF, so the fuel pump relay closes and positive battery voltage is applied directly to the fuel pump. The fuel pump operates at high speed.

During idling or under light loads, Tr2 goes ON, and then power is supplied to the fuel pump via the fuel pump resistor. The fuel pump operates at low speed.

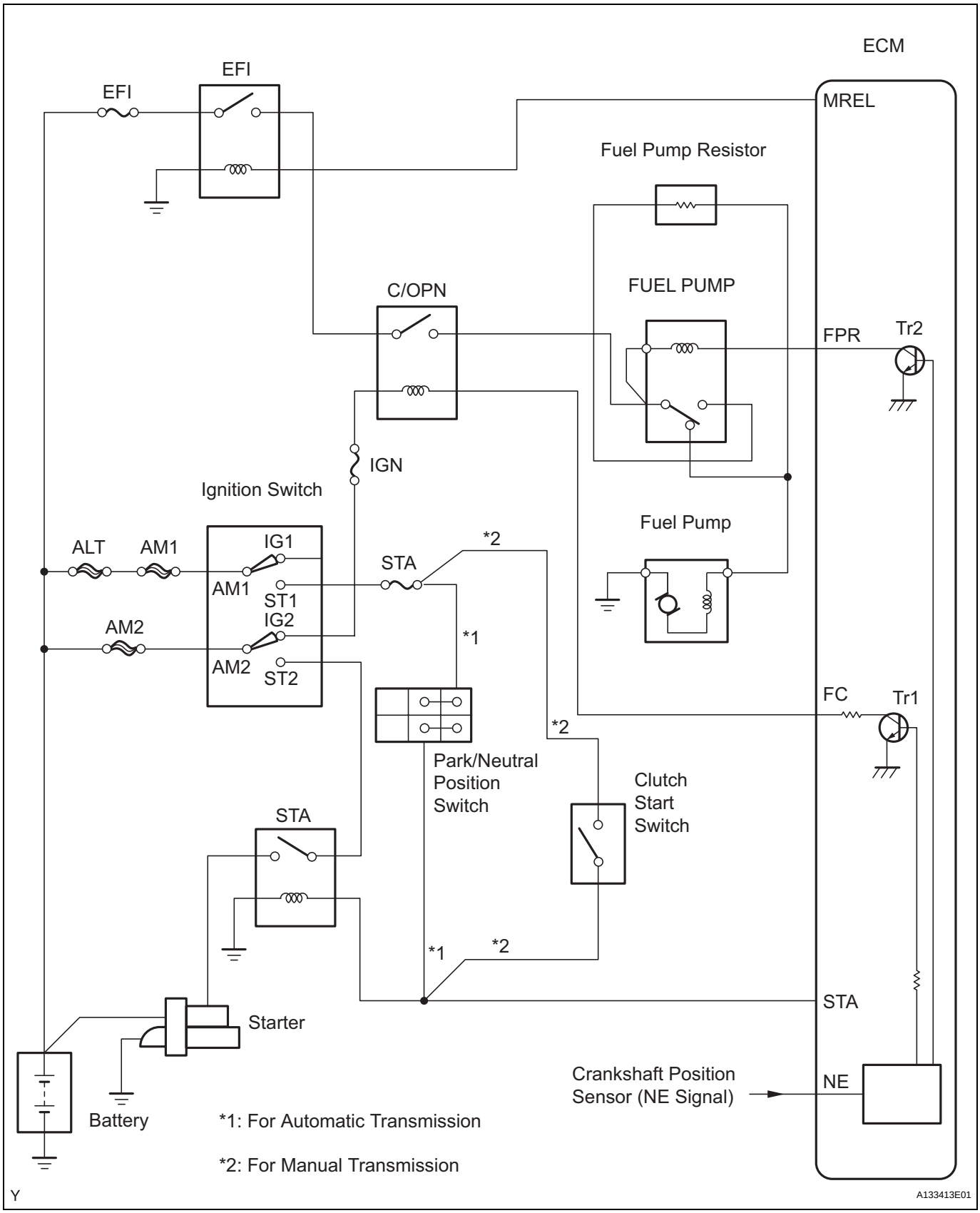

DTC No.	DTC Detection Conditions	Trouble Areas
P0230	Open or short in fuel pump relay circuit (1 trip detection logic)	• Open or short in fuel pump relay circuit • Fuel pump relay • ECM

WIRING DIAGRAM

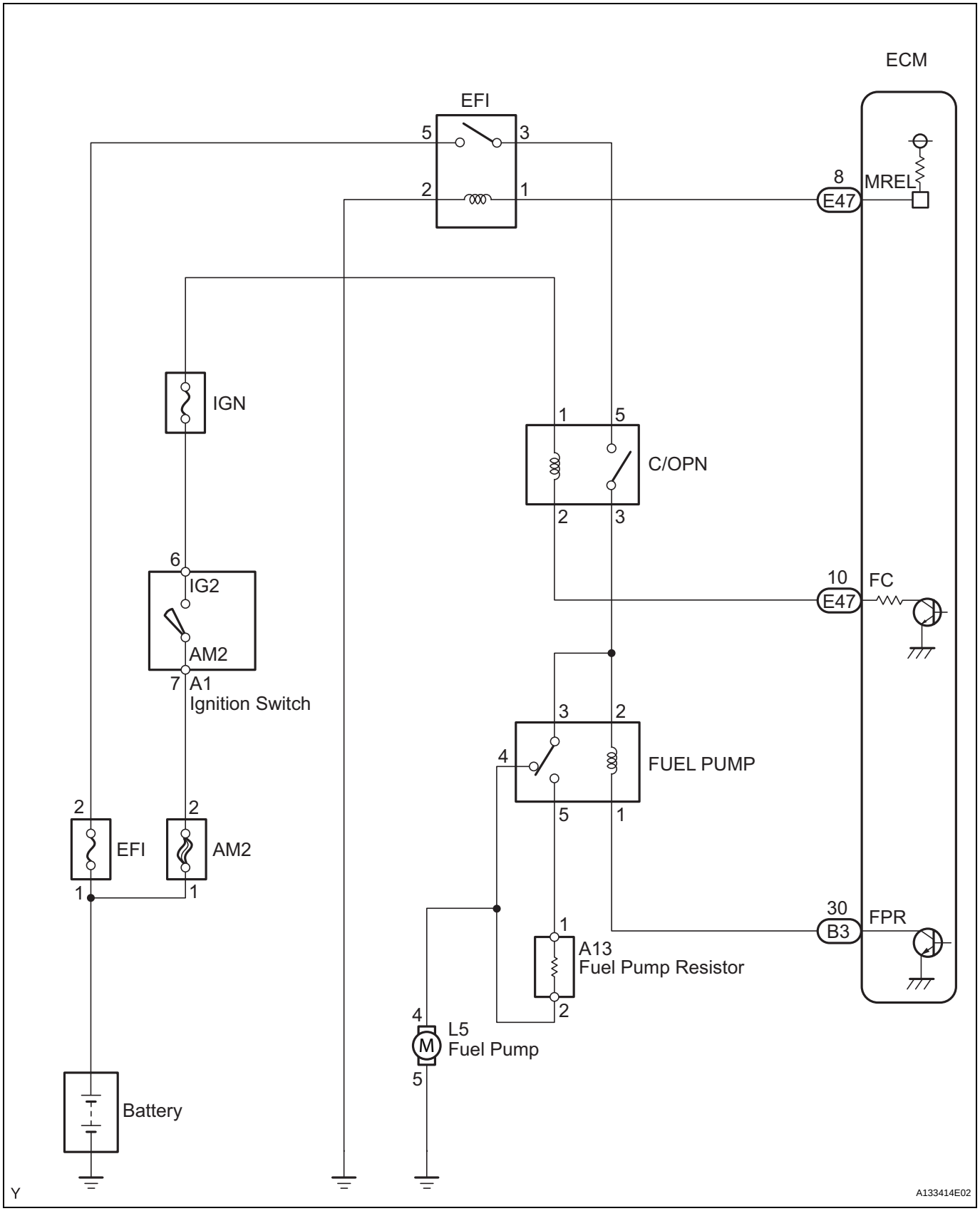

INSPECTION PROCEDURE

HINT:

- This DTC chart is on the premise that the engine is started normally. If the engine is difficult to start, proceed to the problem symptoms table (See page ES-28).
- Read freeze frame data using an intelligent tester. Freeze frame data record the engine condition when malfunctions are detected. When troubleshooting, freeze frame data can help determine if the vehicle was moving or stationary, if the engine was warmed up or not, if the air-fuel ratio was lean or rich, and other data, from the time the malfunction occurred.

1 CHECK ECM (FPR VOLTAGE)

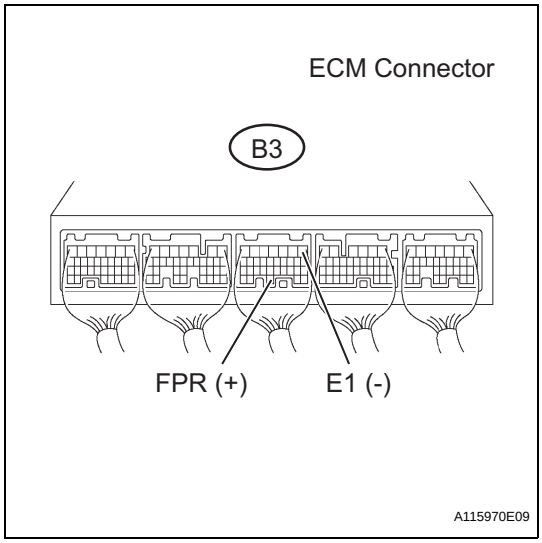

(a) Measure the voltage between the terminals of the B3 ECM connector.

Standard Voltage

Tester Connections	Conditions	Specified Conditions
FPR (B3-30) - E1 (B3-1)	STA signal ON	11 to 14 V
	STA signal OFF	0 to 3 V

NG → **REPLACE ECM (See page ES-446)**

OK

2 INSPECT FUEL PUMP RELAY ASSEMBLY

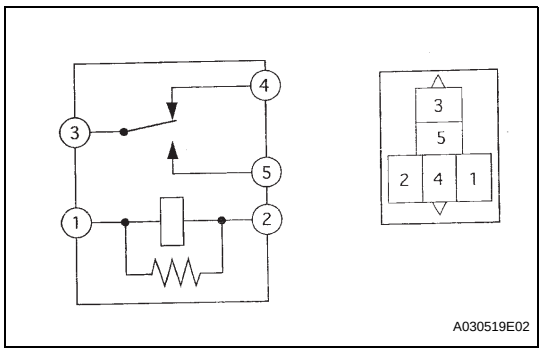

(a) Remove the fuel pump relay from the engine room R/B.

(b) Check the fuel pump relay resistance.

Standard Resistance

Tester Connections	Specified Conditions
3 - 4	Below 1 Ω
3 - 5	10 kΩ or higher
3 - 4	10 kΩ or higher (when battery voltage applied to terminals 1 and 2)
3 - 5	Below 1 Ω (when battery voltage applied to terminals 1 and 2)

(c) Reinstall the fuel pump relay.

NG → **REPLACE FUEL PUMP RELAY ASSEMBLY**

OK

3	CHECK HARNESS AND CONNECTOR (FUEL PUMP RELAY - ECM)

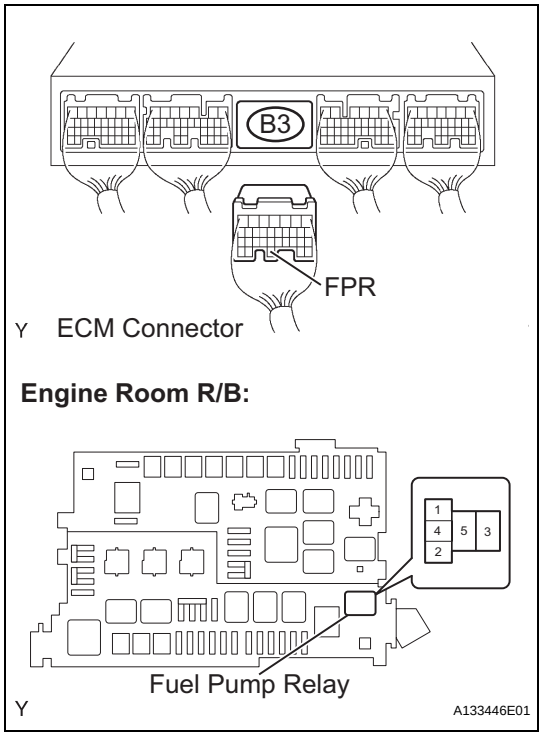

(a) Remove the fuel pump relay from the engine room R/B.
(b) Disconnect the B3 ECM connector.
(c) Check the resistance.

Standard Resistance (Check for open)

Tester Connections	Specified Conditions
Fuel pump relay (1) - FPR (B3-30)	Below 1 Ω

Standard Resistance (Check for short)

Tester Connections	Specified Conditions
Fuel pump relay (1) or FPR (B3-30) - Body ground	10 kΩ or higher

(d) Reinstall the fuel pump relay.
(e) Reconnect the ECM connector.

NG → **REPAIR OR REPLACE HARNESS OR CONNECTOR**

OK

REPLACE ECM (See page ES-446)

ES

DTC	P0300	Random / Multiple Cylinder Misfire Detected

DTC	P0301	Cylinder 1 Misfire Detected

DTC	P0302	Cylinder 2 Misfire Detected

DTC	P0303	Cylinder 3 Misfire Detected

DTC	P0304	Cylinder 4 Misfire Detected

ES

DTC	P0305	Cylinder 5 Misfire Detected

DTC	P0306	Cylinder 6 Misfire Detected

DESCRIPTION

When the engine misfires, high concentrations of hydrocarbons (HC) enter the exhaust gas. Extremely high HC concentration levels can cause increase in exhaust emission levels. High concentrations of HC can also cause increases in the Three-Way Catalytic Converter (TWC) temperature, which may cause damage to the TWC. To prevent this increase in emissions and to limit the possibility of thermal damage, the ECM monitors the misfire rate. When the temperature of the TWC reaches the point of thermal degradation, the ECM blinks the MIL. To monitor misfires, the ECM uses both the Camshaft Position (CMP) sensor and the Crankshaft Position (CKP) sensor. The CMP sensor is used to identify any misfiring cylinders and the CKP sensor is used to measure variations in the crankshaft rotation speed. Misfires are counted when the crankshaft rotation speed variations exceed predetermined thresholds. If the misfire exceeds the threshold levels, and could cause emission deterioration, the ECM illuminates the MIL and sets a DTC.

DTC No.	DTC Detection Conditions	Trouble Areas
P0300	Simultaneous misfiring of several cylinders detected (2 trip detection logic)	• Open or short in engine wire harness • Connector connection • Vacuum hose connections • Ignition system • Injector • Fuel pressure • Mass Air Flow (MAF) meter • Engine Coolant Temperature (ECT) sensor • Compression pressure • Valve clearance • Valve timing • PCV valve and hose • PCV hose connections • Air induction system • ECM
P0301 P0302 P0303 P0304 P0305 P0306	Misfiring of specific cylinder detected (2 trip detection logic)	

HINT:

When DTCs for misfiring cylinders are randomly set, but DTC P0300 is not set, it indicates that misfires have been detected in different cylinders at different times. DTC P0300 is only set when several misfiring cylinders are detected at the same time.

Reference: Inspection using an oscilloscope.

With the engine idling, check the waveform between terminals #10 to #60 and E1 of the ECM connectors.

Items	Contents
Terminals	#10 to #60 - E01
Equipment Settings	20 V/Division, 100 or 1 msec./Division

Items	Contents
Conditions	Idling

HINT:
The correct waveform is as shown.

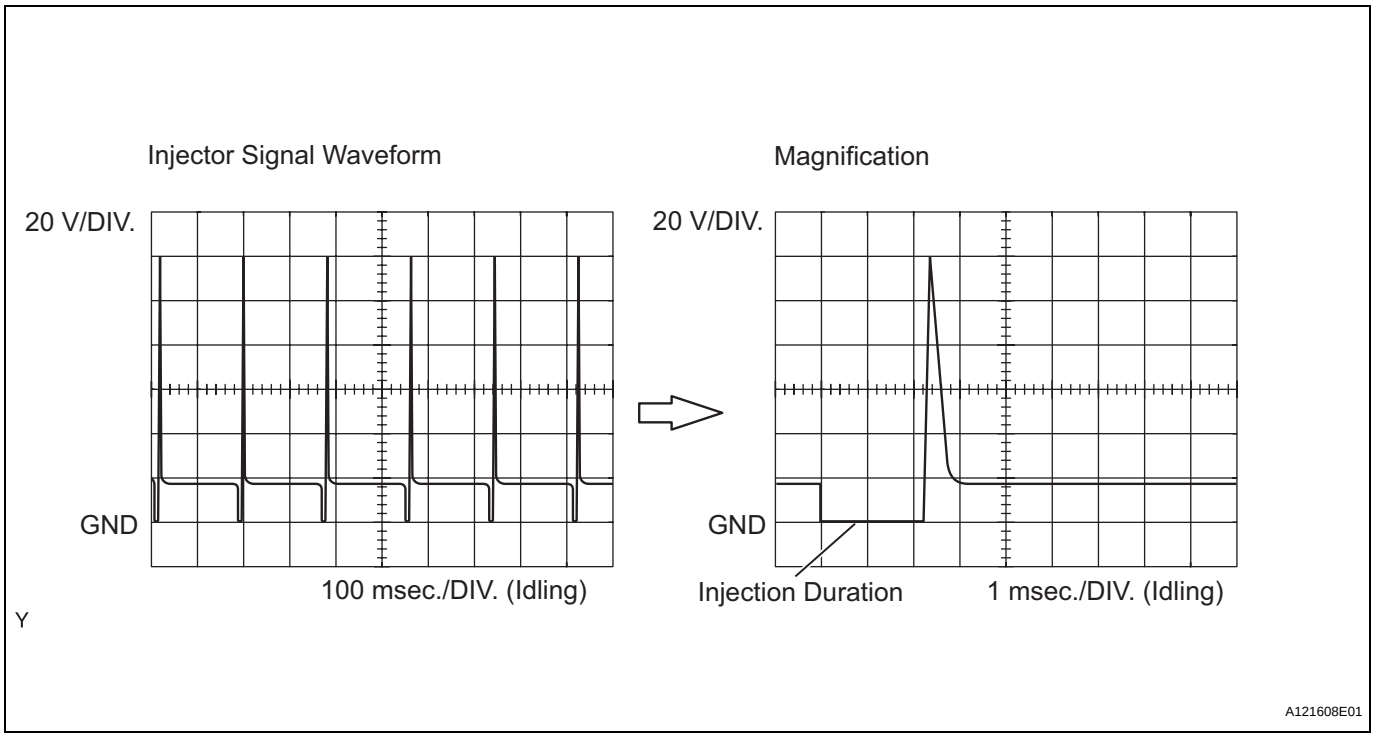

MONITOR DESCRIPTION

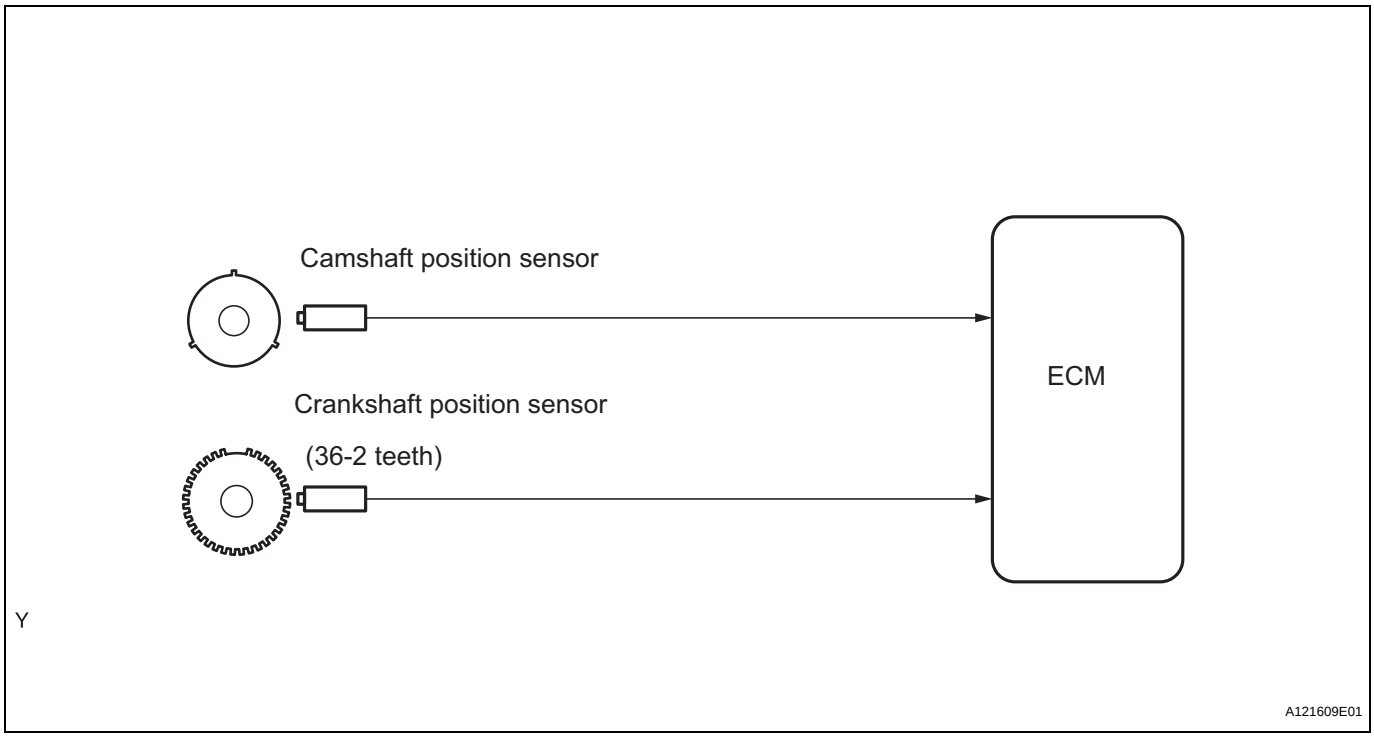

The ECM illuminates the MIL and sets a DTC when either one of the following conditions, which could cause emission deterioration, is detected (2 trip detection logic).

- Within the first 1,000 crankshaft revolutions of the engine starting, an excessive misfiring rate (approximately 20 to 50 misfires per 1,000 crankshaft revolutions) occurs once.

- After the first 1,000 crankshaft revolutions, an excessive misfiring rate (approximately 20 to 50 misfires per 1,000 crankshaft revolutions) occurs 4 times in sequential crankshaft revolutions.

The ECM flashes the MIL and sets a DTC when either one of the following conditions, which could cause the Three-Way Catalytic Converter (TWC) damage, is detected (2 trip detection logic).

- In every 200 crankshaft revolutions at a high engine rpm, the threshold misfiring percentage is recorded once.
- In every 200 crankshaft revolutions at a normal engine rpm, the threshold misfiring percentage is recorded 3 times.

MONITOR STRATEGY

Related DTCs	P0300: Multiple cylinder misfire P0301: Cylinder 1 misfire P0302: Cylinder 2 misfire P0303: Cylinder 3 misfire P0304: Cylinder 4 misfire P0305: Cylinder 5 misfire P0306: Cylinder 6 misfire
Required Sensors/Components (Main)	Crankshaft position sensor and Camshaft position sensor
Required Sensors/Components (Related)	Engine coolant temperature and Intake air temperature sensors and Mass air flow meter
Frequency of Operation	Continuous
Duration	1,000 to 4,000 crankshaft revolutions: Emission related misfire 200 to 600 crankshaft revolutions: Catalyst damaged misfire
MIL Operation	2 driving cycles: Emission related misfire MIL flashes immediately: Catalyst damaged misfire
Sequence of Operation	None

TYPICAL ENABLING CONDITIONS

Misfire:

Monitor runs whenever following DTCs not present	P0100 - P0103 (MAF meter) P0110 - P0113 (IAT sensor) P0115 - P0118 (ECT sensor) P0120 - P0223, P2135 (TP sensor) P0125 (Insufficient ECT for closed loop) P0327 - P0333 (knock sensor) P0335 (CKP sensor) P0340 (CMP sensor) P0500 (VSS)
Battery voltage	8 V or more
VVT system	Not operated by scan tool
Engine RPM	Manual Transmission: 450 to 5,400 rpm Automatic Transmission: 400 to 5,400 rpm
Either of following conditions (a) or (b) met	-
(a) ECT at engine start	More than -7°C (19°F)
(b) ECT	More than 20°C (68°F)
Fuel cut	OFF

Monitor period of emission-related-misfire:

First 1,000 revolutions after engine start, or check mode	Crankshaft 1,000 revolutions
Except above	Crankshaft 1,000 revolutions x 4

Monitor period of catalyst-damaged-misfire (MIL blinks):

All of following conditions 1, 2 and 3 met	Crankshaft 200 revolutions x 3
1. Driving cycles	1st
2. Check mode	OFF
3. Engine RPM	Less than 2,800 rpm

Except above	Crankshaft 200 revolutions

TYPICAL MALFUNCTION THRESHOLDS

Monitor period of emission-related-misfire:

Misfire rate	2.9 % or more (Manual transmission) 2 % or more (Automatic transmission)

Monitor period of catalyst-damage-misfire (MIL blinks):

Number of misfires per 200 revolutions	77 or more (varies with intake air amount and RPM)
Paired cylinders misfire (MIL blinks immediately)	Detected

MONITOR RESULT

Refer to CHECKING MONITOR STATUS (See page ES-20).

ES

WIRING DIAGRAM

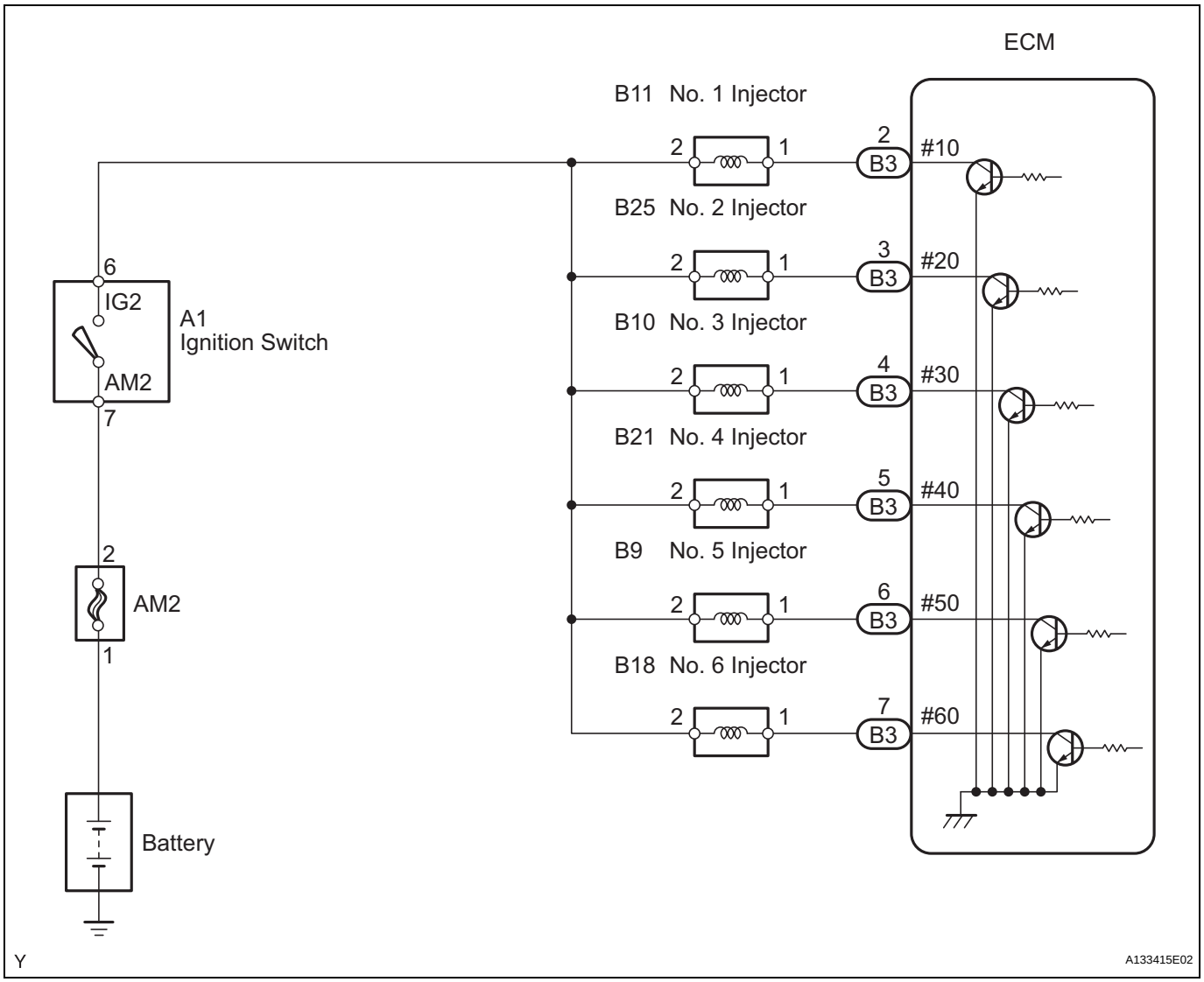

CONFIRMATION DRIVING PATTERN

(a) Connect an intelligent tester to the DLC3.
(b) Turn the ignition switch ON.
(c) Turn the tester ON.

(d) Record the DTC(s) and freeze frame data.
(e) Using the tester, switch the ECM from normal mode to check mode (See page ES-42).
(f) Read the misfire counts of each cylinder (CYL #1 to #6) with the engine in an idling condition. If any misfire count is displayed, skip the following confirmation driving pattern.
(g) Drive the vehicle several times with the conditions, such as engine rpm and engine load, shown in MISFIRE RPM and MISFIRE LOAD in the DATA LIST.
HINT:
In order to store misfire DTCs, it is necessary to drive the vehicle for the period of time shown in the table below, with the MISFIRE RPM and MISFIRE LOAD in the DATA LIST.

Engine RPM	Duration
Idling	3.5 minutes or more
1,000	3 minutes or more
2,000	1.5 minutes or more
3,000	1 minute or more

(h) Check whether misfires have occurred by checking DTCs and freeze frame data.
HINT:
Do not turn the ignition switch OFF until the stored DTC(s) and freeze frame data have been recorded. When the ECM returns to normal mode (default), the stored DTC(s), freeze frame data and other data will be erased.
(i) Record the DTC(s), freeze frame data and misfire counts.
(j) Turn the ignition switch OFF and wait for at least 5 seconds.

INSPECTION PROCEDURE

HINT:
- If any DTCs other than the misfire DTCs are output, troubleshoot those DTCs first.
- Read freeze frame data using an intelligent tester. Freeze frame data record the engine conditions when malfunctions are detected. When troubleshooting, freeze frame data can help determine if the vehicle was moving or stationary, if the engine was warmed up or not, if the air-fuel ratio was lean or rich, and other data, from the time the malfunction occurred.
- If the misfire does not recur when the vehicle is brought to the workshop, reproduce the conditions stored in the freeze frame data.
- The misfire still cannot be reproduced even though the conditions stored in the freeze frame data have been duplicated, one of the following factors is considered to be a possible cause of the problem:
  (1) The fuel tank is low full.
  (2) Improper fuel is used.
  (3) The spark plugs have been contaminated.
  (4) The problem is complex due to multiple factors.
- After finishing repairs, check the misfire counts of the cylinders (CYL #1, #2, #3, #4, #5 and #6).
- Be sure to confirm that no misfiring cylinder DTCs are set again by conducting the confirmation driving pattern, after repairs.
- For 6 and 8 cylinder engines, the ECM intentionally does not set the specific misfiring cylinder DTCs at high engine RPM. If misfires occur only in high engine RPM areas, only DTC P0300 is set.
  In the event of DTC P0300 being present, perform the following operations:
  (1) Clear DTCs (See page ES-38).
  (2) Start the engine and conduct the confirmation driving pattern.
  (3) Read the misfiring rates of each cylinder or DTC(s) using the tester.
  (4) Repair the cylinder(s) that has a high misfiring rate or is indicated by the DTC.
  (5) After finishing repairs, conduct the confirmation driving pattern again, in order to verify that DTC P0300 is not set.
- When one of SHORT FT #1, LONG FT #1, SHORT FT #2 or LONG FT #2 in the freeze frame data is outside the range of +-20 %, the air-fuel ratio may be rich (-20 % or less) or lean (+20 % or more).
- When the COOLANT TEMP in the freeze frame data is less than 75°C (167°F), the misfires have occurred only while warming up the engine.

1	CHECK ANY OTHER DTCS OUTPUT (IN ADDITION TO MISFIRE DTCS)

(a) Connect an intelligent tester to the DLC3.
(b) Turn the ignition switch ON.
(c) Turn the tester ON.
(d) Select the following menu items: DIAGNOSIS / ENHANCED OBD II / DTC INFO / CURRENT CODES.
(e) Read DTCs.

Result

Display (DTC Output)	Proceed To
P0300, P0301, P0302, P0303, P0304, P0305 and/or P0306	A
P0300, P0301, P0302, P0303, P0304, P0305 and/or P0306 and other DTCs	B

ES

HINT:
If any DTCs other than P0300, P0301, P0302, P0303, P0304, P0305 and P0306 are output, troubleshoot those DTCs first.

B → **GO TO DTC CHART (See page ES-57)**

A

2	READ VALUE USING INTELLIGENT TESTER (MISFIRE RPM AND MISFIRE LOAD)

(a) Connect an intelligent tester to the DLC3.
(b) Turn the ignition switch ON and turn the tester ON.
(c) Select the following menu items: DIAGNOSIS / ENHANCED OBD II / DATA LIST / MISFIRE / MISFIRE RPM and MISFIRE LOAD.
(d) Read and note the MISFIRE RPM and MISFIRE LOAD (engine load) values.
HINT:
The MISFIRE RPM and MISFIRE LOAD indicate the vehicle conditions under which the misfire occurred.

NEXT

3	CHECK PCV HOSE CONNECTIONS

OK:
PCV hose is connected correctly and is not damaged.

NG → **REPAIR OR REPLACE PCV HOSE**

OK

4	CHECK MISFIRE COUNT (CYL #1, #2, #3, #4, #5 AND #6)

(a) Connect an intelligent tester to the DLC3.
(b) Turn the ignition switch ON.
(c) Turn the tester ON.
(d) Clear DTCs (See page ES-38).

(e) Select the following menu items: DIAGNOSIS / ENHANCED OBD II / DATA LIST / MISFIRE / CYL #1, #2, #3, #4, #5 and #6.
(f) Allow the engine to idle.
(g) Read each value of CYL #1 to #6 displayed on the tester. If no misfire counts occur in any cylinders, perform the following operations:
  (1) Shift the gear selector lever to the D position.
  (2) Repeat steps (e) to (g) above.
  (3) Check the CYL #1 to #6.
  (4) If misfire counts are still not displayed, perform steps (h) and (i) and then check the misfire counts again.
(h) Drive the vehicle with the MISFIRE RPM and MISFIRE LOAD noted in step 2.
(i) Read the CYL #1 to #6 or DTCs displayed on the tester.

Result

Misfire Count	Proceed To
One or two cylinders have misfire counts	A
Three cylinders or more have misfire counts	B

B → **Go to step 13**

A

5 CHECK SPARK PLUG

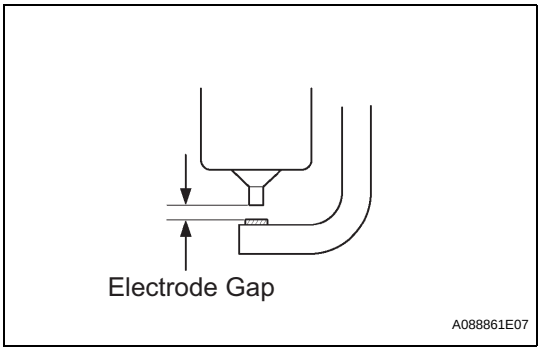

(a) Remove the ignition coil and the spark plug of the misfiring cylinder.
(b) Measure the spark plug electrode gap.
Standard:
1.0 to 1.1 mm (0.039 to 0.043 in.)
(c) Check the electrode for carbon deposits.
Recommended spark plug

Manufactures	Products
DENSO	K20HR-U11
NGK	LFR6C11

NOTICE:
If the electrode gap is larger than standard, replace the spark plug. Do not adjust the electrode gap.
(d) Reinstall the ignition coil and the spark plug.

NG → **REPLACE SPARK PLUG**

OK

6 CHECK SPARKS AND IGNITION

(a) Disconnect the injector connectors, in order to prevent the engine from starting.
(b) Install the spark plug to the ignition coil.

(c) Attach the spark plug assembly to the cylinder head cover.
(d) Crank the engine for less than 2 seconds and check the spark.
OK:
Sparks jump across electrode gap
(e) Reconnect the injector connectors.

NG → **Go to step 8**

OK ↓

7	CHECK CYLINDER COMPRESSION PRESSURE OF MISFIRING CYLINDER

(a) Measure the cylinder compression pressure of the misfiring cylinder.

OK → **Go to step 9**

NG ↓

REPAIR OR REPLACE MALFUNCTION PARTS

8	CHANGE NORMAL SPARK PLUG AND CHECK SPARK OF MISFIRING CYLINDER

(a) Change the installed spark plug to a spark plug that functions normally.
(b) Perform a spark test.
CAUTION:
Always disconnect each injector connector.
NOTICE:
Do not crank the engine for more than 2 seconds.
(1) Install the spark plug to the ignition coil and connect the ignition coil connector.
(2) Disconnect the injector connector.
(3) Ground the spark plug.
(4) Check if sparks occur while the engine is being cranked.
OK:
Sparks jump across electrode gap.

NG → **REPLACE IGNITION COIL ASSEMBLY THEN CONFIRM THAT THERE IS NO MISFIRE**

OK ↓

REPLACE SPARK PLUG

9	INSPECT ECM TERMINAL VOLTAGE OF MISFIRING CYLINDER (#10, #20, #30, #40, #50 AND/OR #60 VOLTAGE)

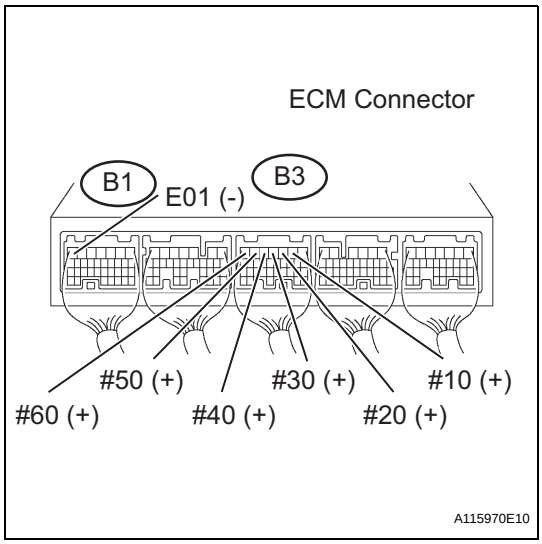

(a) Turn the ignition switch ON.
(b) Measure the voltage between the terminals of the B1 and B3 ECM connectors.

Standard Voltage

Tester Connections	Specified Conditions
#10 (B3-2) - E01 (B1-7)	11 to 14 V
#20 (B3-3) - E01 (B1-7)	
#30 (B3-4) - E01 (B1-7)	
#40 (B3-5) - E01 (B1-7)	
#50 (B3-6) - E01 (B1-7)	
#60 (B3-7) - E01 (B1-7)	

OK → **Go to step 11**

NG

10	CHECK HARNESS AND CONNECTOR (INJECTOR - ECM)

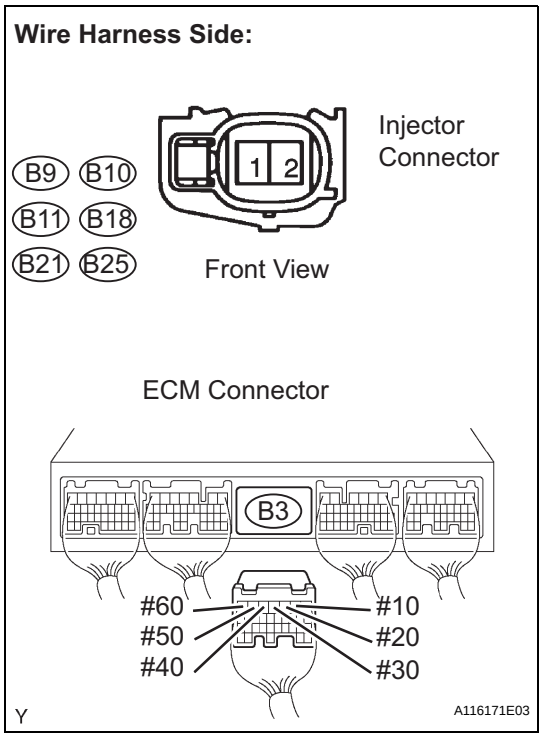

(a) Disconnect the injector connector (of the misfiring cylinder).
(b) Disconnect the B3 ECM connector.
(c) Turn the ignition switch ON.
(d) Measure the resistance and voltage between the injector and the ECM connector terminals.

Standard (Cylinder No. 1)

Tester Connections	Specified Conditions
B11-2 - Ground	11 to 14 V
B11-1 - Ground	10 kΩ or higher
B11-1 - #10 (B3-2)	Below 1 Ω

Standard (Cylinder No. 2)

Tester Connections	Specified Conditions
B25-2 - Ground	11 to 14 V
B25-1 - Ground	10 kΩ or higher
B25-1 - #20 (B3-3)	Below 1 Ω

Standard (Cylinder No. 3)

Tester Connections	Specified Conditions
B10-2 - Ground	11 to 14 V
B10-1 - Ground	10 kΩ or higher
B10-1 - #30 (B3-4)	Below 1 Ω

Standard (Cylinder No. 4)

Tester Connections	Specified Conditions
B21-2 - Ground	11 to 14 V
B21-1 - Ground	10 kΩ or higher

Tester Connections	Specified Conditions
B21-1 - #40 (B3-5)	Below 1 Ω

Standard (Cylinder No. 5)

Tester Connections	Specified Conditions
B9-2 - Ground	11 to 14 V
B9-1 - Ground	10 kΩ or higher
B9-1 - #50 (B3-6)	Below 1 Ω

Standard (Cylinder No. 6)

Tester Connections	Specified Conditions
B18-2 - Ground	11 to 14 V
B18-1 - Ground	10 kΩ or higher
B18-1 - #60 (B3-7)	Below 1 Ω

(e) Reconnect the injector connector.
(f) Reconnect the ECM connector.

NG → **REPAIR OR REPLACE HARNESS OR CONNECTOR**

OK

11 CHECK FUEL INJECTOR OF MISFIRING CYLINDER

(a) Check the injector injection (whether fuel volume is high or low, and whether injection pattern is poor).

NG → **REPLACE FUEL INJECTOR ASSEMBLY (See page FU-11)**

OK

12 CHECK VALVE CLEARANCE OF MISFIRING CYLINDER

NG → **ADJUST VALVE CLEARANCE (See page EM-8)**

OK

13 CHECK AIR INDUCTION SYSTEM

(a) Check the air induction system for vacuum leakage.
OK:
No leakage from air induction system.

NG → **REPAIR OR REPLACE AIR INDUCTION SYSTEM**

OK

14	CHECK VALVE TIMING

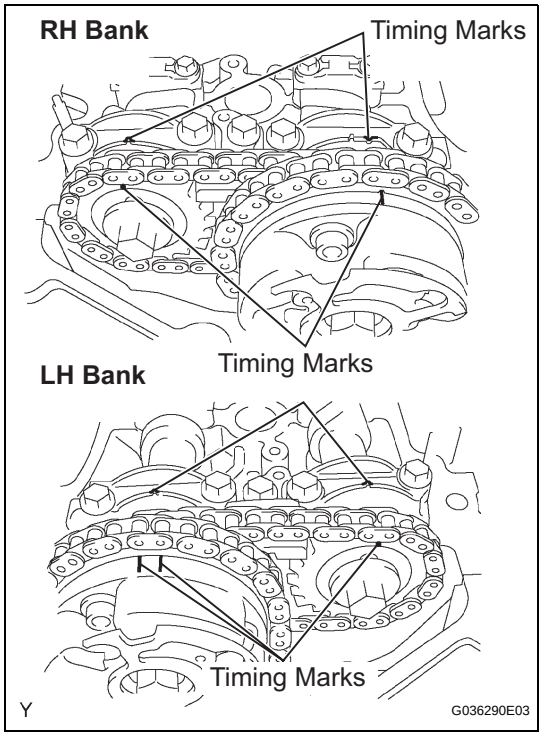

(a) Remove the cylinder head cover.
(b) Turn the crankshaft pulley, and align its groove with the timing mark "0" of the timing chain cover.
(c) Check that the timing marks of the camshaft timing gears are aligned with the timing marks of the bearing cap as shown in the illustration.
If not, turn the crankshaft 1 revolution (360°) and align the marks as above.
OK:
Timing marks on camshaft timing gears are aligned as shown in illustration.
(d) Reinstall the cylinder head cover.

NG → **ADJUST VALVE TIMING**

OK

15	CHECK FUEL PRESSURE

(a) Check the fuel pressure (See page FU-6).

NG → **CHECK AND REPLACE FUEL PUMP, PRESSURE REGULATOR, FUEL PIPE LINE AND FILTER**

OK

16	READ VALUE USING INTELLIGENT TESTER (COOLANT TEMP)

(a) Connect an intelligent tester to the DLC3.
(b) Turn the ignition switch ON.
(c) Turn the tester ON.
(d) Select the following menu items: DIAGNOSIS / ENHANCED OBD II / DATA LIST / PRIMARY / COOLANT TEMP.
(e) Read the COOLANT TEMP twice, when the engine is both cold and warmed up.
Standard:
With cold engine: Same as ambient air temperature.
With warm engine: 80°C to 100°C (176°F to 212°F).

NG → **REPLACE ENGINE COOLANT TEMPERATURE SENSOR (See page ES-424)**

OK

17	READ VALUE USING INTELLIGENT TESTER (MAF)

(a) Connect an intelligent tester to the DLC3.
(b) Turn the ignition switch ON.
(c) Turn the tester ON.
(d) Select the following menu items: DIAGNOSIS / ENHANCED OBD II / DATA LIST / PRIMARY / MAF and COOLANT TEMP.
(e) Allow the engine to idle until the COOLANT TEMP reaches 75°C (167°F) or more.
(f) Read the MAF with the engine in an idling condition and at an engine speed of 2,500 rpm.
Standard:
MAF while engine idling: 3.2 to 4.7 g/sec (shift position: N, A/C: OFF).
MAF at engine speed of 2,500 rpm: 13.1 to 18.9 g/sec (shift position: N, A/C: OFF).

NG → **REPLACE MASS AIR FLOW METER (See page ES-409)**

OK

CHECK FOR INTERMITTENT PROBLEMS

ES

DTC	P0327	Knock Sensor 1 Circuit Low Input (Bank 1 or Single Sensor)

DTC	P0328	Knock Sensor 1 Circuit High Input (Bank 1 or Single Sensor)

DTC	P0332	Knock Sensor 2 Circuit Low Input (Bank 2)

DTC	P0333	Knock Sensor 2 Circuit High Input (Bank 2)

ES

DESCRIPTION

A flat type knock sensor (non-resonant type) has a structure that can detect vibrations over a wide band of frequencies: between approximately 6 kHz and 15 kHz.
Knock sensors are fitted onto the engine block to detect engine knocking.
The knock sensor contains a piezoelectric element which generates a voltage when it becomes deformed. The voltage is generated when the engine block vibrates due to knocking. Any occurrence of engine knocking can be suppressed by delaying the ignition timing.

DTC No.	DTC Detection Conditions	Trouble Areas
P0327 P0332	Output voltage of knock sensor 1 or 2 is 0.5 V or less (1 trip detection logic)	• Short in knock sensor 1 or 2 circuit • Knock sensor 1 or 2 • ECM
P0328 P0333	Output voltage of knock sensor 1 or 2 is 4.5 V or more (1 trip detection logic)	• Open in knock sensor 1 or 2 circuit • Knock sensor 1 or 2 • ECM

HINT:
When any of DTCs P0327, P0328, P0332 and P0333 are set, the ECM enters fail-safe mode. During fail-safe mode, the ignition timing is delayed to its maximum retardation. Fail-safe mode continues until the ignition switch is turned OFF.

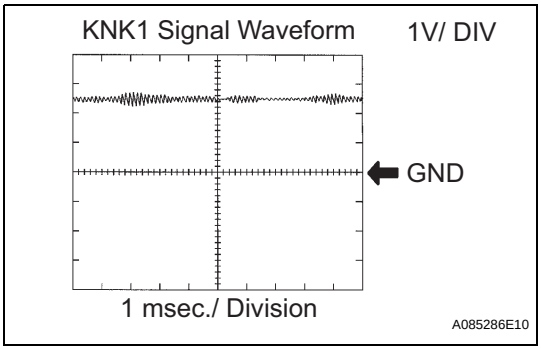

Reference: Inspection using an oscilloscope
The correct waveform is as shown.

Items	Contents
Terminals	KNK1 - EKNK or KNK2 - EKN2
Equipment Settings	1 V/Division, 1 msec./Division
Conditions	Keep engine speed at 4,000 rpm with warm engine

MONITOR DESCRIPTION

If the output voltage transmitted by the knock sensor remains low or high for more than 1 second, the ECM interprets this as a malfunction in the sensor circuit, and sets a DTC.
The monitor for DTCs P0327, P0328, P0332 and P0333 begins to run when 5 seconds have elapsed since the engine was started.
If the malfunction is not repaired successfully, any of DTC P0327, P0328, P0332 or P0333 is set 5 seconds after the engine is next started.

MONITOR STRATEGY

Related DTCs	P0327: Knock sensor (Bank 1) open/short (Low voltage) P0328: Knock sensor (Bank 1) open/short (High voltage) P0332: Knock sensor (Bank 2) open/short (Low voltage) P0333: Knock sensor (Bank 2) open/short (High voltage)
Required Sensors/Components (Main)	Knock sensor (Bank 1 and 2)
Required Sensors/Components (Related)	-
Frequency of Operation	Continuous
Duration	1 second
MIL Operation	Immediate
Sequence of Operation	None

TYPICAL ENABLING CONDITIONS

Monitor runs whenever following DTCs not present	None
Battery voltage	10.5 V or more
Time after engine start	5 seconds or more

TYPICAL MALFUNCTION THRESHOLDS

Knock Sensor Range Check (Low voltage) P0327 and P0332:

Knock sensor voltage	Less than 0.5 V

Knock Sensor Range Check (High voltage) P0328 and P0333:

Knock sensor voltage	More than 4.5 V

WIRING DIAGRAM

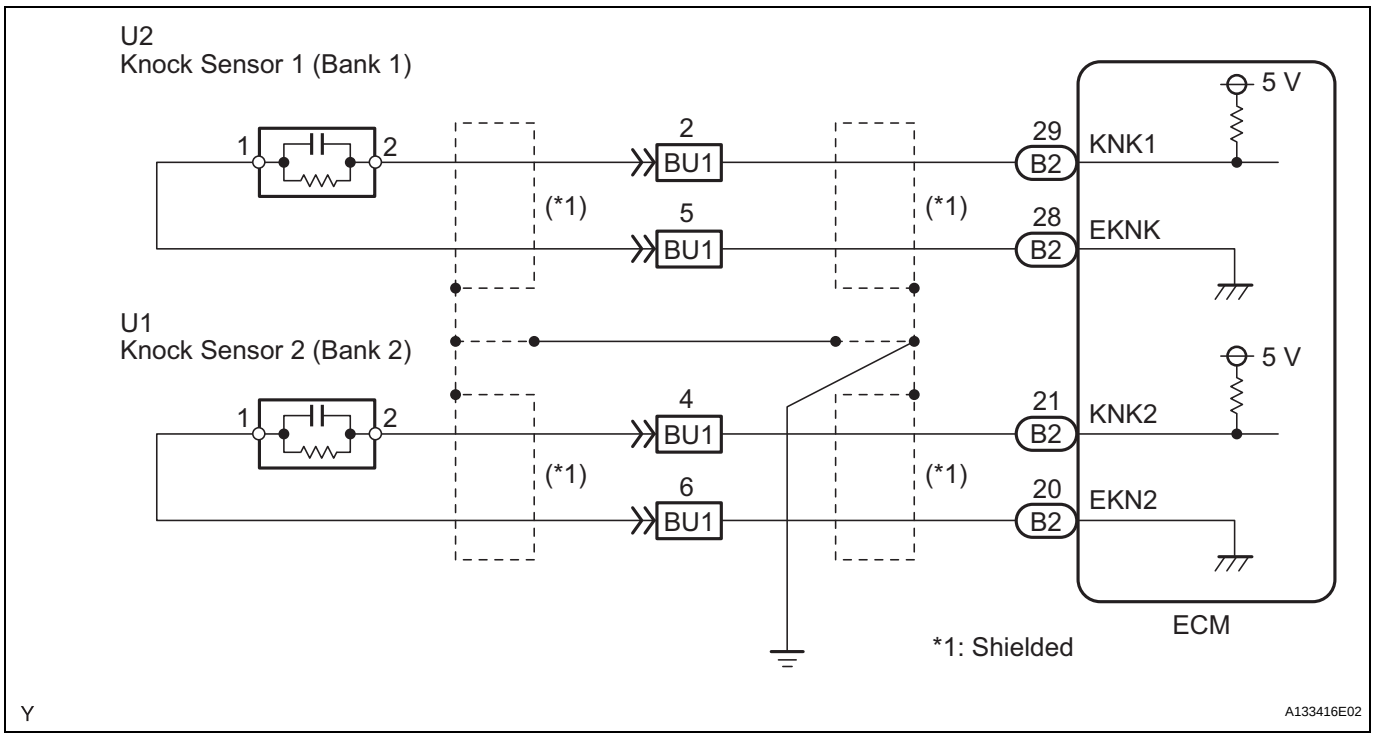

INSPECTION PROCEDURE

HINT:

- DTCs P0327 and P0328 are for the bank 1 knock sensor circuit.
- DTCs P0332 and P0333 are for the bank 2 knock sensor circuit.
- Read freeze frame data using an intelligent tester. Freeze frame data record the engine condition when malfunctions are detected. When troubleshooting, freeze frame data can help determine if the vehicle was moving or stationary, if the engine was warmed up or not, if the air-fuel ratio was lean or rich, and other data, from the time the malfunction occurred.

1	READ OUTPUT DTC (CHECK KNOCK SENSOR CIRCUIT)

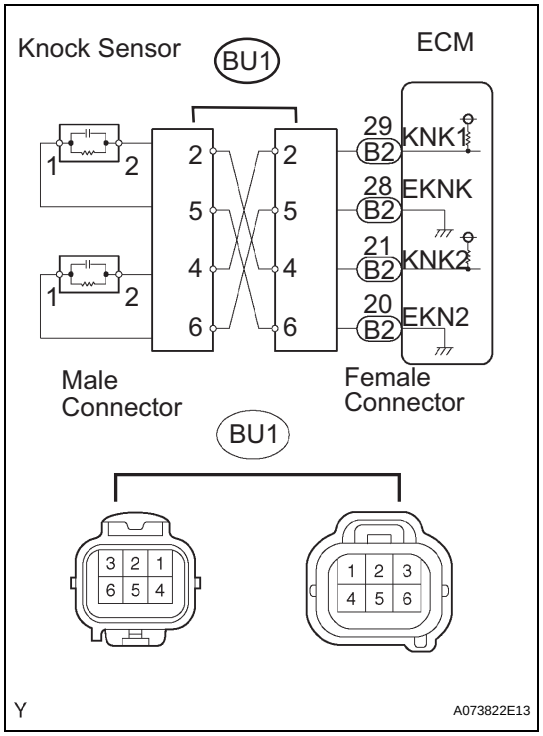

(a) Disconnect the BU1 connector.
(b) Using lead wires, connect the connectors as follows.

Male Connector - Female Connector
Terminal 2 - Terminal 4
Terminal 5 - Terminal 6
Terminal 4 - Terminal 2
Terminal 6 - Terminal 5

(c) Warm up the engine.
(d) Run the engine at 3,000 rpm for 10 seconds or more.
(e) Connect an intelligent tester to the DLC3.
(f) Turn the ignition switch ON and turn the tester ON.
(g) Select the item: DIAGNOSIS / ENHANCED OBD II / DTC INFO / CURRENT CODES.
(h) Read DTCs.

Result

Display	Proceed to
DTCs same as when vehicle brought in P0327, P0328 → P0327, P0328 or P0332, P0333 → P0332, P0333	**A**
DTCs different from when vehicle brought in P0327, P0328 → P0332, P0333 or P0332, P0333 → P0327, P0328	**B**

(i) Reconnect the BU1 connector.

B → **Go to step 4**

A

2	CHECK HARNESS AND CONNECTOR (CONNECTOR - ECM)

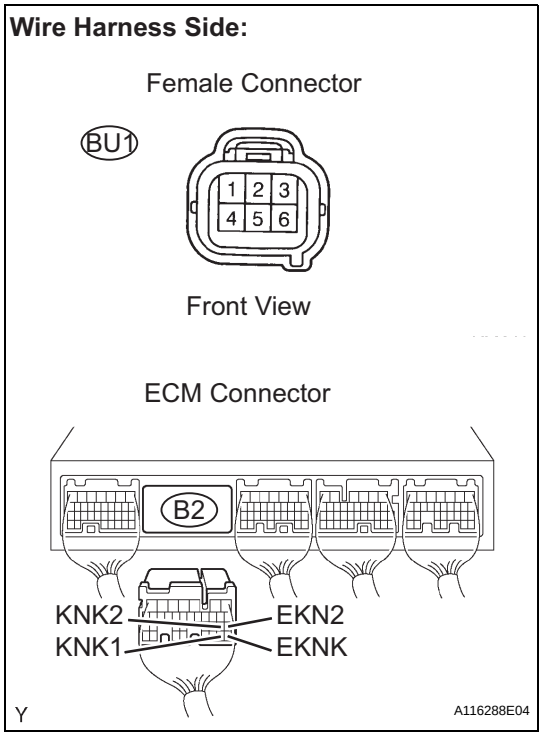

(a) Disconnect the BU1 connector.
(b) Disconnect the B2 ECM connector.
(c) Check the resistance.

Standard Resistance (Check for open)

Tester Connections	Specified Conditions
BU1 female connector 2 - KNK1 (B2-29)	Below 1 Ω
BU1 female connector 5 - EKNK (B2-28)	
BU1 female connector 4 - KNK2 (B2-21)	
BU1 female connector 6 - EKN2 (B2-20)	

Standard Resistance (Check for short)

Tester Connections	Specified Conditions
BU1 female connector 2 or KNK1 (B2-29) - Body ground	10 kΩ or higher
BU1 female connector 5 or EKNK (B2-28) - Body ground	
BU1 female connector 4 or KNK2 (B2-21) - Body ground	
BU1 female connector 6 or EKN2 (B2-20) - Body ground	

(d) Reconnect the BU1 connector.
(e) Reconnect the ECM connector.

NG → **REPAIR OR REPLACE HARNESS OR CONNECTOR**

OK

3	INSPECT ECM

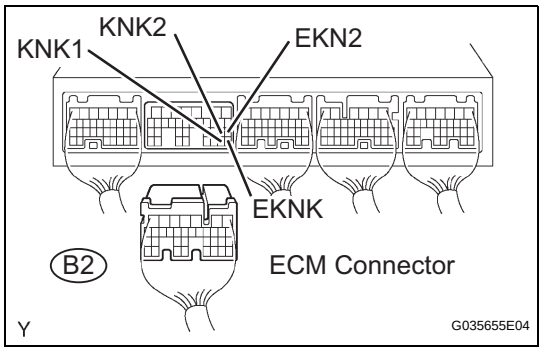

(a) Disconnect the B2 ECM connector.
(b) Turn the ignition switch ON.
(c) Measure the voltage between the ECM terminals.

Standard Voltage

Tester Connections	Specified Conditions
KNK1 (B2-29) - EKNK (B2-28)	4.5 to 5.5 V
KNK2 (B2-21) - EKN2 (B2-20)	

(d) Reconnect the ECM connector.

NG → **REPLACE ECM (See page ES-446)**

OK

CHECK FOR INTERMITTENT PROBLEMS

4 INSPECT KNOCK SENSOR

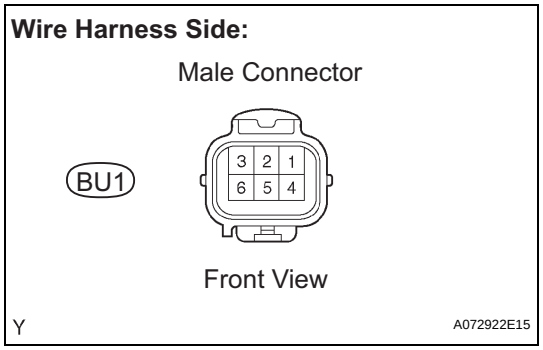

(a) Disconnect the BU1 connector.
(b) Check the resistance between the terminals of the BU1 male connector.

Standard Resistance

Tester Connections	Specified Conditions
BU1 male connector 2 - 5	120 to 280 kΩ
BU1 male connector 4 - 6	

(c) Reconnect the BU1 connector.

OK → **CHECK FOR INTERMITTENT PROBLEMS**

NG

5 CHECK HARNESS AND CONNECTOR (CONNECTOR - KNOCK SENSOR)

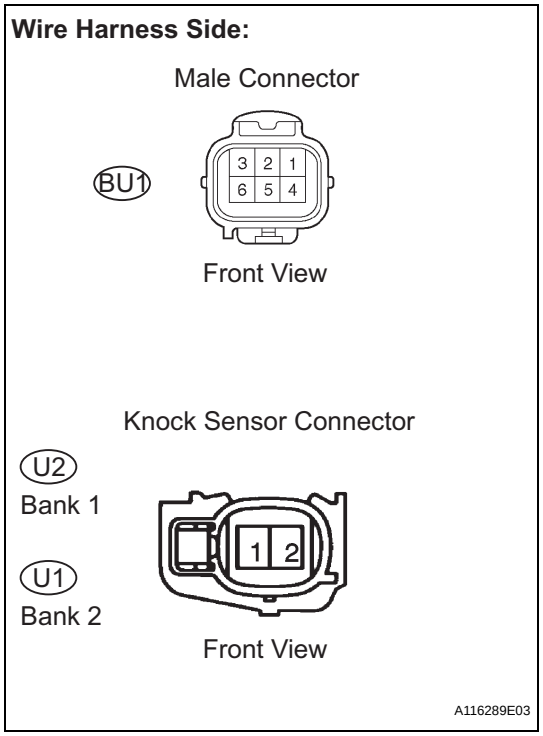

HINT:
- If DTC P0327 or P0328 has changed to P0332 or P0333, check the knock sensor circuit on the right bank side.
- If DTC P0332 or P0333 has changed to P0327 or P0328, check the knock sensor circuit on the left bank side.

(a) Disconnect the BU1 connector.
(b) Disconnect the U1 and U2 knock sensor connectors.
(c) Check the resistance.

Standard Resistance (Check for open)

Tester Connections	Specified Conditions
BU1 male connector 2 - U2-2	Below 1 Ω
BU1 male connector 5 - U2-1	
BU1 male connector 4 - U1-2	
BU1 male connector 6 - U1-1	

Standard Resistance (Check for short)

Tester Connections	Specified Conditions
BU1 male connector 2 or U2-2 - Body ground	10 kΩ or higher
BU1 male connector 5 or U2-1 - Body ground	
BU1 male connector 4 or U1-2 - Body ground	
BU1 male connector 6 or U1-1 - Body ground	

(d) Reconnect the BU1 connector.
(e) Reconnect the knock sensor connector.

NG → **REPAIR OR REPLACE HARNESS OR CONNECTOR**

OK

REPLACE KNOCK SENSOR (See page ES-438)

DTC	P0335	Crankshaft Position Sensor "A" Circuit

DTC	P0339	Crankshaft Position Sensor "A" Circuit Intermittent

DESCRIPTION

The Crankshaft Position (CKP) sensor system consists of a CKP sensor plate and a pickup coil. The sensor plate has 34 teeth and is installed on the crankshaft. The pickup coil is made of an iron core and a magnet.

The sensor plate rotates and, as each tooth passes through the pickup coil, a pulse signal is created. The pickup coil generates 34 signals per engine revolution. Based on these signals, the ECM calculates the crankshaft position and engine RPM. Using these calculations, the fuel injection time and ignition timing are controlled.

ES

DTC No.	DTC Detection Conditions	Trouble Areas
P0335	• No CKP sensor signal to ECM while cranking (1 trip detection logic) • No CKP sensor signal to ECM at engine speed of 600 rpm or more (1 trip detection logic)	• Open or short in CKP sensor circuit • CKP sensor • Sensor plate (CKP sensor plate) • ECM
P0339	Under conditions (a), (b) and (c), no CKP sensor signal to ECM for 0.05 seconds or more (1 trip detection logic) (a) Engine speed 1,000 rpm or more (b) Starter signal OFF (c) 3 seconds or more have elapsed since starter signal switched from ON to OFF	

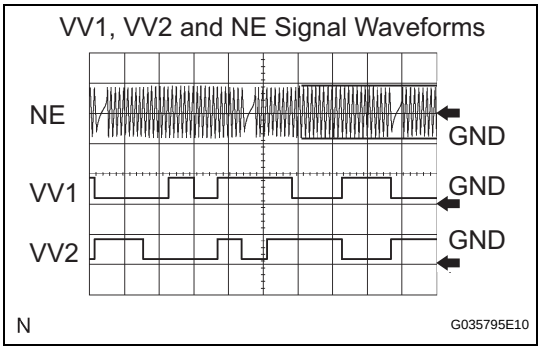

Reference: Inspection using an oscilloscope

HINT:

- The correct waveform is shown above.
- VV1+ and VV2+ stand for the VVT sensor signal, and NE+ stands for the CKP sensor signal.

Items	Contents
Terminals	VV1+ - VV1- VV2+ - VV2- NE+ - NE-
Equipment Settings	5 V/DIV, 20 msec./DIV.
Conditions	Cranking or idling

MONITOR DESCRIPTION

If there is no signal from the CKP sensor despite the engine revolving, the ECM interprets this as a malfunction of the sensor.

If the malfunction is not repaired successfully, a DTC is set 10 seconds after the engine is next started.

MONITOR STRATEGY

Related DTCs	P0335: Crankshaft position sensor range check/rationality
Required Sensors/Components (Main)	Crankshaft Position (CKP) sensor
Required Sensors/Components (Related)	VVT sensor
Frequency of Operation	Continuous
Duration	Conditions met for 3 times
MIL Operation	Immediate
Sequence of Operation	None

TYPICAL ENABLING CONDITIONS

All:

Monitor runs whenever following DTCs not present	None

Case 1:

Time after starter OFF to ON	0.3 seconds or more
Number of VVT sensor signal pulse	6 times
Battery voltage	7 V or more
Ignition switch	ON

Case 2:

Starter	OFF
Engine RPM	600 rpm or more
Time after starter from ON to OFF	3 seconds or more

TYPICAL MALFUNCTION THRESHOLDS

Case 1:

Number of CKP sensor signal pulse	132 or less, or 174 or more

Case 2:

Engine speed signal	No signal

COMPONENT OPERATING RANGE

CKP sensor	• CKP sensor output voltage fluctuates while crankshaft revolving • 34 CKP sensor signals per crankshaft revolution

WIRING DIAGRAM

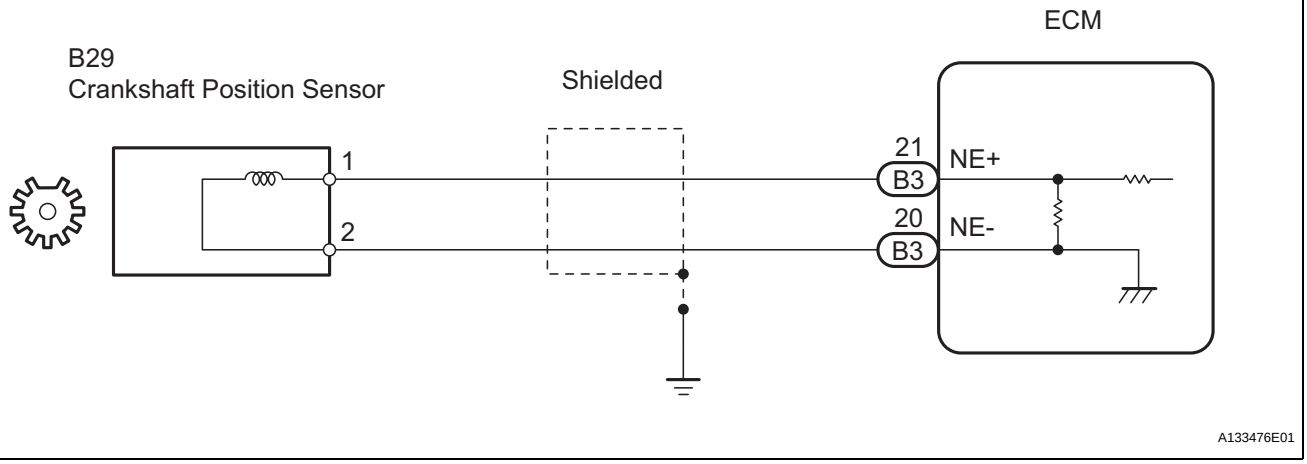

ES

INSPECTION PROCEDURE

HINT:

- If no problem is found by this diagnostic troubleshooting procedure, troubleshoot the engine mechanical systems.
- Check the engine speed. The engine speed can be checked by using an intelligent tester. To check, follow the operation below:
  (a) Connect an intelligent tester to the DLC3.
  (b) Start the engine.
  (c) Turn the tester ON
  (d) Select the following menu items: DIAGNOSIS / ENHANCED OBD II / DATA LIST / PRIMARY / ENGINE SPD.
  The engine speed may be indicated as zero despite the engine revolving normally. This is caused by a lack of NE signals from the Crankshaft Position (CKP) sensor. Alternatively, the engine speed may be indicated as lower than the actual engine speed, if the CKP sensor voltage output is insufficient.
- Read freeze frame data using an intelligent tester. Freeze frame data record the engine condition when malfunctions are detected. When troubleshooting, freeze frame data can help determine if the vehicle was moving or stationary, if the engine was warmed up or not, if the air-fuel ratio was lean or rich, and other data, from the time the malfunction occurred.

1	INSPECT CRANKSHAFT POSITION SENSOR (RESISTANCE)

Component Side:

Crankshaft Position Sensor

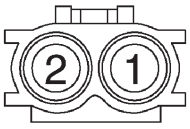

Front View

A078431E17

(a) Disconnect the B29 Crankshaft Position (CKP) sensor connector.
(b) Measure the resistance between terminals 1 and 2.
Standard Resistance

Tester Connections	Specified Conditions
1 - 2	1,850 Ω to 2,450 Ω at 20°C (68°F)

(c) Reconnect the CKP sensor connector.

NG → **REPLACE CRANKSHAFT POSITION SENSOR (See page ES-420)**

OK

2 CHECK HARNESS AND CONNECTOR (CRANKSHAFT POSITION SENSOR - ECM)

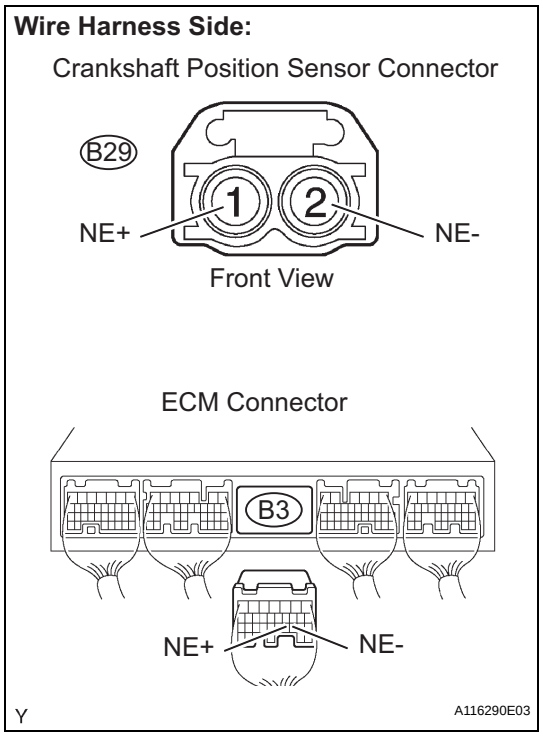

(a) Disconnect the B29 CKP sensor connector.
(b) Disconnect the B3 ECM connector.
(c) Check the resistance.

Standard Resistance (Check for open)

Tester Connections	Specified Conditions
NE+ (B29-1) - NE+ (B3-21)	Below 1 Ω
NE- (B29-2) - NE- (B3-20)	

Standard Resistance (Check for short)

Tester Connections	Specified Conditions
NE+ (B29-1) or NE+ (B3-21) - Body ground	10 kΩ or higher
NE- (B29-2) or NE- (B3-20) - Body ground	

(d) Reconnect the ECM connector.
(e) Reconnect the CKP sensor connector.

NG → **REPAIR OR REPLACE HARNESS OR CONNECTOR**

OK

3 CHECK SENSOR INSTALLATION (CRANKSHAFT POSITION SENSOR)

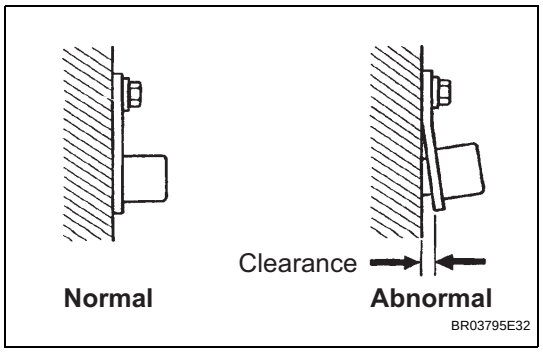

(a) Check the CKP sensor installation.

OK:

Sensor is installed correctly.

NG → **TIGHTEN SENSOR**

OK

4 CHECK CRANKSHAFT POSITION SENSOR PLATE (TEETH OF SENSOR PLATE (CRANKSHAFT))

(a) Check the teeth of the sensor plate.

OK:

Sensor plate does not have any cracks or deformation.

ES

NG → REPLACE CRANKSHAFT POSITION SENSOR PLATE

OK

REPLACE ECM (See page ES-446)

DTC	P0340	Camshaft Position Sensor "A" Circuit (Bank 1 or Single Sensor)
DTC	P0342	Camshaft Position Sensor "A" Circuit Low Input (Bank 1 or Single Sensor)
DTC	P0343	Camshaft Position Sensor "A" Circuit High Input (Bank 1 or Single Sensor)
DTC	P0345	Camshaft Position Sensor "A" Circuit (Bank 2)
DTC	P0347	Camshaft Position Sensor "A" Circuit Low Input (Bank 2)
DTC	P0348	Camshaft Position Sensor "A" Circuit High Input (Bank 2)

DESCRIPTION

The intake camshaft's Variable Valve Timing (VVT) sensor (G signal) consists of a magnet and MRE (Magneto Resistance Element).

The VVT camshaft drive gear has a sensor plate with 3 teeth on its outer circumference. When the gear rotates, changes occur in the air gaps between the sensor plate and MRE, which affects the magnetic field. As a result, the resistance of the MRE material fluctuates. The VVT sensor converts the gear rotation data to pulse signals, uses the pulse signals to determine the camshaft angle, and sends it to the ECM.

The crankshaft angle sensor plate has 34 teeth. The pickup coil generates 34 signals for each engine revolution. Based on the combination of the G signal and NE signal, the ECM detects the crankshaft angle. Then the ECM uses this data to control fuel injection time and injection timing. Also, based on the NE signal, the ECM detects the engine speed.

DTC No.	DTC Detection Conditions	Trouble Areas
P0340 P0345	• Input voltage to ECM remains 0.3 V or less, or 4.7 V or higher for more than 5 seconds, when 2 or more seconds have elapsed after turning ignition switch ON (1 trip detection logic) • No VVT sensor signal to ECM during cranking (2 trip detection logic)	• Open or short in VVT sensor circuit • VVT sensor • Camshaft timing gear • Jumped tooth of timing chain • ECM
P0342 P0347	Output voltage of VVT sensor 0.3 V or less for 5 seconds (1 trip detection logic)	
P0343 P0348	Output voltage of VVT sensor 4.7 V or more for 5 seconds (1 trip detection logic)	

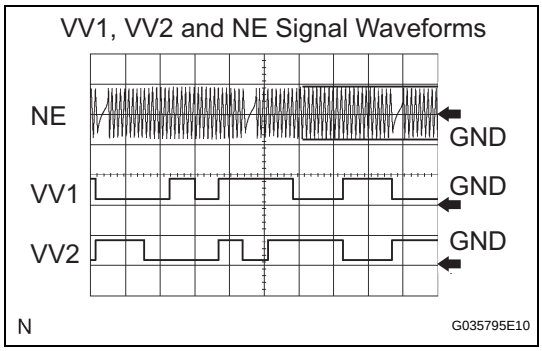

Reference: Inspection using an oscilloscope
HINT:

ES

- The correct waveform is shown above.
- VV1+ and VV2+ stand for the VVT sensor signal, and NE+ stands for the CKP sensor signal.

Items	Contents
Terminals	NE+ - NE- VV1+ - VV1- VV2+ - VV2-
Equipment Settings	5 V/Division, 20 ms/Division
Conditions	Cranking or idling

MONITOR DESCRIPTION

If no signal is transmitted by the VVT sensor despite the engine revolving, or the rotations of the camshaft and the crankshaft are not synchronized, the ECM interprets this as a malfunction of the sensor.

MONITOR STRATEGY

Related DTCs	P0340: VVT sensor (Bank 1) range check P0340: Camshaft position/Crankshaft position misalignment (Bank 1) P0340: VVT sensor (Bank 1) range check (fluctuating) P0342: VVT sensor (Bank 1) range check (low voltage) P0343: VVT sensor (Bank 1) range check (high voltage) P0345: VVT sensor (Bank 2) range check (while starting engine) P0345: VVT sensor (Bank 2) range check (after starting engine) P0345: VVT sensor (Bank 2) range check (fluctuating) P0347: VVT sensor (Bank 2) range check (low voltage) P0348: VVT sensor (Bank 2) range check (high voltage)
Required Sensors/Components (Main)	VVT sensors (Banks 1 and 2)
Required Sensors/Components (Related)	Crankshaft position sensor
Frequency of Operation	Continuous
Duration	4 seconds: P0340 (VVT sensor (Bank 1) range check and VVT sensor (Bank 1) range check (fluctuating)), P0342, P0343 and P0345 (VVT sensor range check (while starting engine)) 5 seconds: Others
MIL Operation	2 driving cycles: P0340 (VVT sensor range check), P0345 (VVT sensor range check (while starting engine)) Immediate: Others
Sequence of Operation	None

TYPICAL ENABLING CONDITIONS

All:

Monitor runs whenever following DTCs not present	None

VVT Sensor Range Check:

Starter	ON
Minimum battery voltage while starter ON	Less than 11 V

Camshaft Position/Crankshaft Position Misalignment:

Engine RPM	600 rpm or more
Starter	OFF

VVT Sensor Range Check (Fluctuating, Low voltage, High voltage):

Starter	OFF
Ignition switch ON and time after ignition switch changed from OFF to ON	2 seconds or more

VVT Sensor Range Check (While starting engine):

Starter	ON
Battery voltage while starter ON once at least	Less than 11 V

VVT Sensor Range Check (After starting engine):

Engine RPM	600 rpm or more
Starter	OFF
Battery voltage	8 V or more
Ignition switch	ON

VVT Sensor Range Check (Fluctuating, Low voltage, High voltage):

Starter	OFF
Ignition switch ON and time after ignition switch changed from OFF to ON	2 seconds or more
Battery voltage	8 V or more

TYPICAL MALFUNCTION THRESHOLDS

VVT Sensor Range Check:

VVT sensor signal	No signal

Camshaft Position/Crankshaft Position Misalignment:

Camshaft position and crankshaft position phases	Mis-aligned

VVT Sensor Range Check (Fluctuating):

VVT sensor voltage	Less than 0.3 V, or more than 4.7 V

VVT Sensor Range Check (Low voltage):

VVT sensor voltage	Less than 0.3 V

VVT Sensor Range Check (High voltage):

VVT sensor voltage	More than 4.7 V

VVT Sensor Range Check (While starting engine):

VVT sensor signal	No signal

VVT Sensor Range Check (After starting engine):

VVT sensor signal	No signal

VVT Sensor Range Check (Fluctuating):

VVT sensor voltage	Less than 0.3 V, or more than 4.7 V

VVT Sensor Range Check (Low voltage):

VVT sensor voltage	Less than 0.3 V

VVT Sensor Range Check (High voltage):

VVT sensor voltage	More than 4.7 V

COMPONENT OPERATING RANGE

VVT sensor voltage	0.3 to 4.7 V

WIRING DIAGRAM

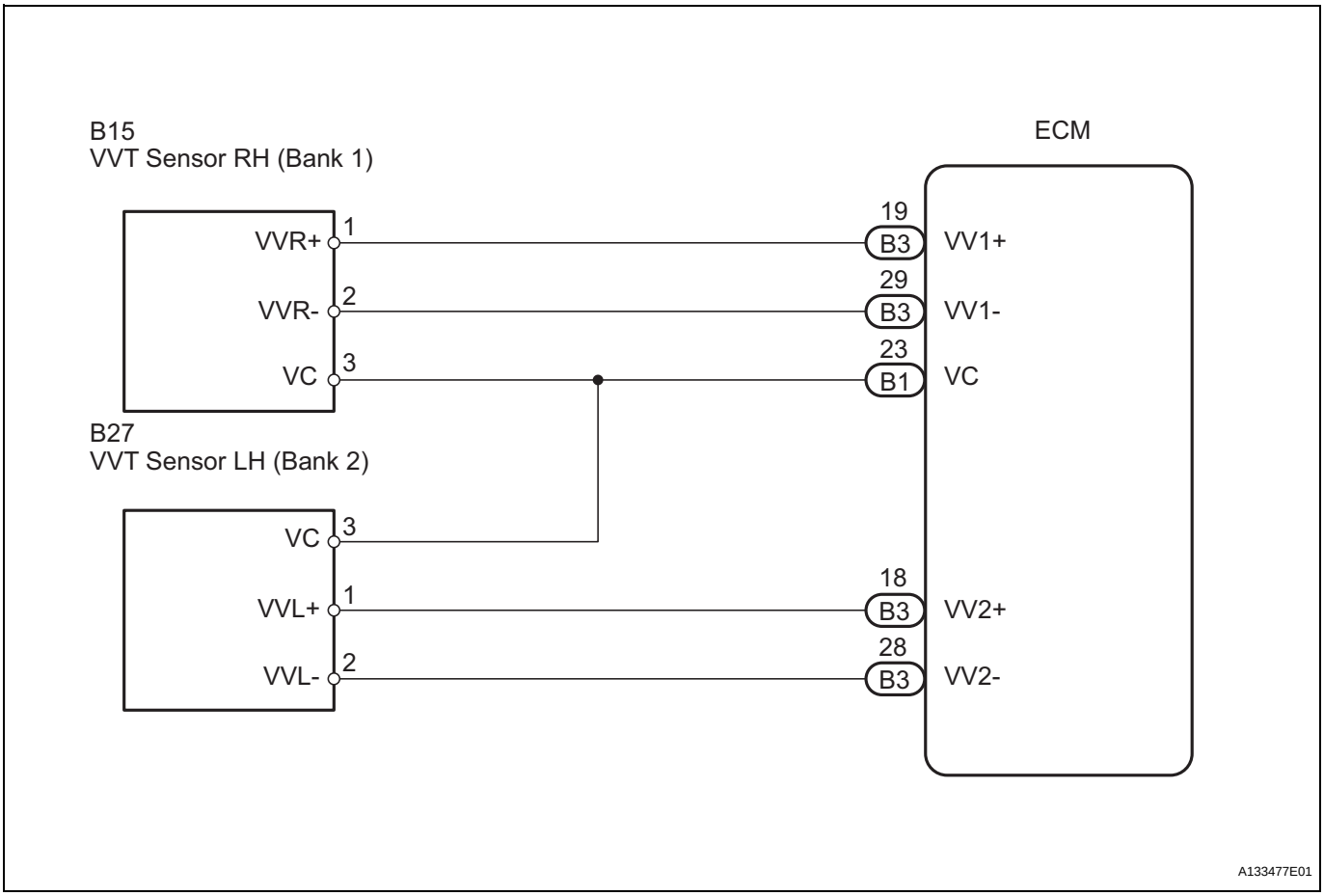

INSPECTION PROCEDURE

HINT:

Read freeze frame data using an intelligent tester. Freeze frame data records the engine conditions when a malfunction is detected. When troubleshooting, freeze frame data can help determine if the vehicle was running or stopped, if the engine was warmed up or not, if the air-fuel ratio was lean or rich, and other data from the time the malfunction occurred.

1 CHECK ECM TERMINAL VOLTAGE

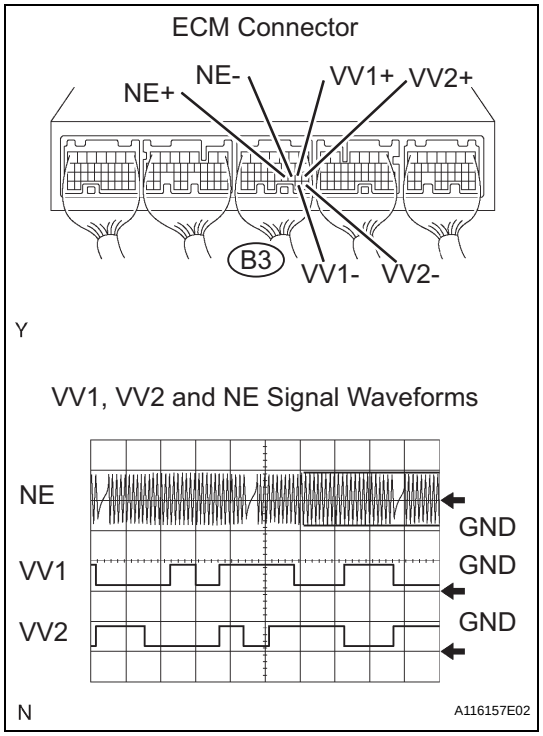

(a) Inspect the ECM using an oscilloscope.

Items	Contents
Terminals	NE+ - NE- VV1+ - VV1- VV2+ - VV2-
Equipment Settings	5 V/Division, 20 ms/Division
Conditions	Cranking or idling

(1) While the engine is idling, check the waveform between the terminals of the ECM connector.
Standard

Tester Connections	Specified Conditions
VV1+ (B3-19) - VV1- (B3-29)	Correct waveform as shown in illustration
VV2+ (B3-18) - VV2- (B3-28)	
NE+ (B3-21) - NE- (B3-20)	

OK → CHECK FOR INTERMITTENT PROBLEMS

NG

2 CHECK VVT SENSOR (SENSOR POWER SOURCE)

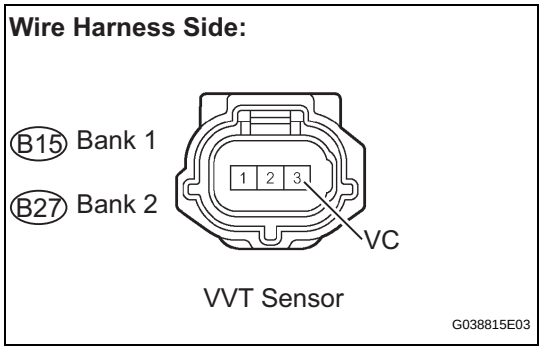

(a) Disconnect the B15 or B27 VVT sensor connector.
(b) Measure the voltage between the terminals of the VVT sensor.
Standard Voltage

Tester Connection	Specified Condition
VC (3) - Body ground	4.5 to 5.5 V

(c) Reconnect the VVT sensor connector.

NG → REPAIR OR REPLACE POWER SOURCE CIRCUIT

OK

3 CHECK HARNESS AND CONNECTOR (VVT SENSOR - ECM)

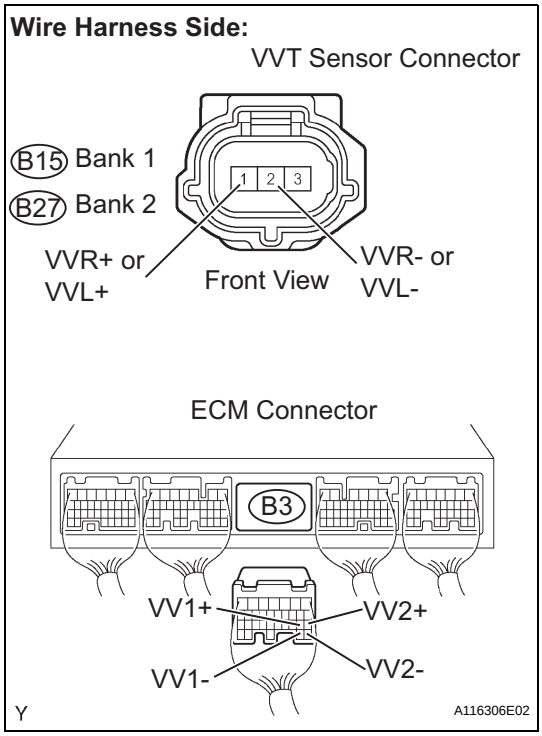

(a) Disconnect the B15 or B27 VVT sensor connector.
(b) Disconnect the B3 ECM connector.
(c) Check the resistance.

Standard Resistance (Check for open)

Tester Connections	Specified Conditions
VVR+ (B15-1) - VV1+ (B3-19)	Below 1 Ω
VVL+ (B27-1) - VV2+ (B3-18)	
VVR- (B15-2) - VV1- (B3-29)	
VVL- (B27-2) - VV2- (B3-28)	

Standard Resistance (Check for short)

Tester Connections	Specified Conditions
VVR+ (B15-1) or VV1+ (B3-19) - Body ground	10 kΩ or higher
VVL+ (B27-1) or VV2+ (B3-18) - Body ground	
VVR- (B15-2) or VV1- (B3-29) - Body ground	
VVL- (B27-2) or VV2- (B3-28) - Body ground	

(d) Reconnect the VVT sensor connector.
(e) Reconnect the ECM connector.

NG → **REPAIR OR REPLACE HARNESS OR CONNECTOR**

OK

4 CHECK SENSOR INSTALLATION (VVT SENSOR)

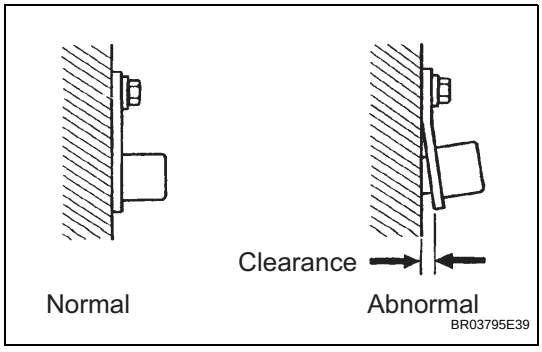

(a) Check the VVT sensor installation.

OK:

Sensor is installed correctly.

NG → **SECURELY REINSTALL SENSOR**

OK

5 CHECK VALVE TIMING (See page ES-79)

NG → **ADJUST VALVE TIMING**

OK

6	CHECK CAMSHAFT TIMING GEAR ASSEMBLY (TEETH PLATE)

(a) Check the teeth of the signal plate.
OK:
Sensor plate teeth do not have any cracks or deformation.

NG → **REPLACE CAMSHAFT TIMING GEAR ASSEMBLY**

OK

ES

7	REPLACE VVT SENSOR

NEXT

8	CHECK WHETHER DTC OUTPUT RECURS (DTC P0340, P0342, P0343, P0345, P0347 AND/OR P0348)

(a) Connect the intelligent tester to the DLC3.
(b) Turn the ignition switch ON.
(c) Turn the tester ON.
(d) Clear DTCs (See page ES-38).
(e) Start the engine.
(f) Select the following menu items: DIAGNOSIS / ENHANCED OBD II / DTC INFO / PENDING CODES.
(g) Read DTCs.

Result

Display (DTC Output)	Proceed To
No output	A
P0340, P0342, P0343, P0345, P0347 and/or P0348	B

HINT:
If the engine does not start, replace the ECM.

B → **REPLACE ECM (See page ES-446)**

A

END

DTC	P0351	Ignition Coil "A" Primary / Secondary Circuit
DTC	P0352	Ignition Coil "B" Primary / Secondary Circuit
DTC	P0353	Ignition Coil "C" Primary / Secondary Circuit
DTC	P0354	Ignition Coil "D" Primary / Secondary Circuit
DTC	P0355	Ignition Coil "E" Primary / Secondary Circuit
DTC	P0356	Ignition Coil "F" Primary / Secondary Circuit

HINT:
- These DTCs indicate malfunctions relating to the primary circuit.
- If DTC P0351 is set, check No. 1 ignition coil with igniter circuit.
- If DTC P0352 is set, check No. 2 ignition coil with igniter circuit.
- If DTC P0353 is set, check No. 3 ignition coil with igniter circuit.
- If DTC P0354 is set, check No. 4 ignition coil with igniter circuit.
- If DTC P0355 is set, check No. 5 ignition coil with igniter circuit.
- If DTC P0356 is set, check No. 6 ignition coil with igniter circuit.

DESCRIPTION

A Direct Ignition System (DIS) is used on this vehicle.
The DIS is a 1-cylinder ignition system in which each cylinder is ignited by one ignition coil and one spark plug is connected to the end of each secondary wiring. A powerful voltage, generated in the secondary wiring, is applied directly to each spark plug. The sparks of the spark plugs pass from the center electrodes to the ground electrodes.
The ECM determines the ignition timing and transmits the ignition (IGT) signals to each cylinder. Using the IGT signal, the ECM turns the power transistor inside the igniter on and off. The power transistor, in turn, switches on and off the current to the primary coil. When the current to the primary coil is cut off, a powerful voltage is generated in the secondary coil. This voltage is applied to the spark plugs, causing them to spark inside the cylinders. As the ECM cuts the current to the primary coil, the igniter sends back an ignition confirmation (IGF) signal to the ECM, for each cylinder ignition.

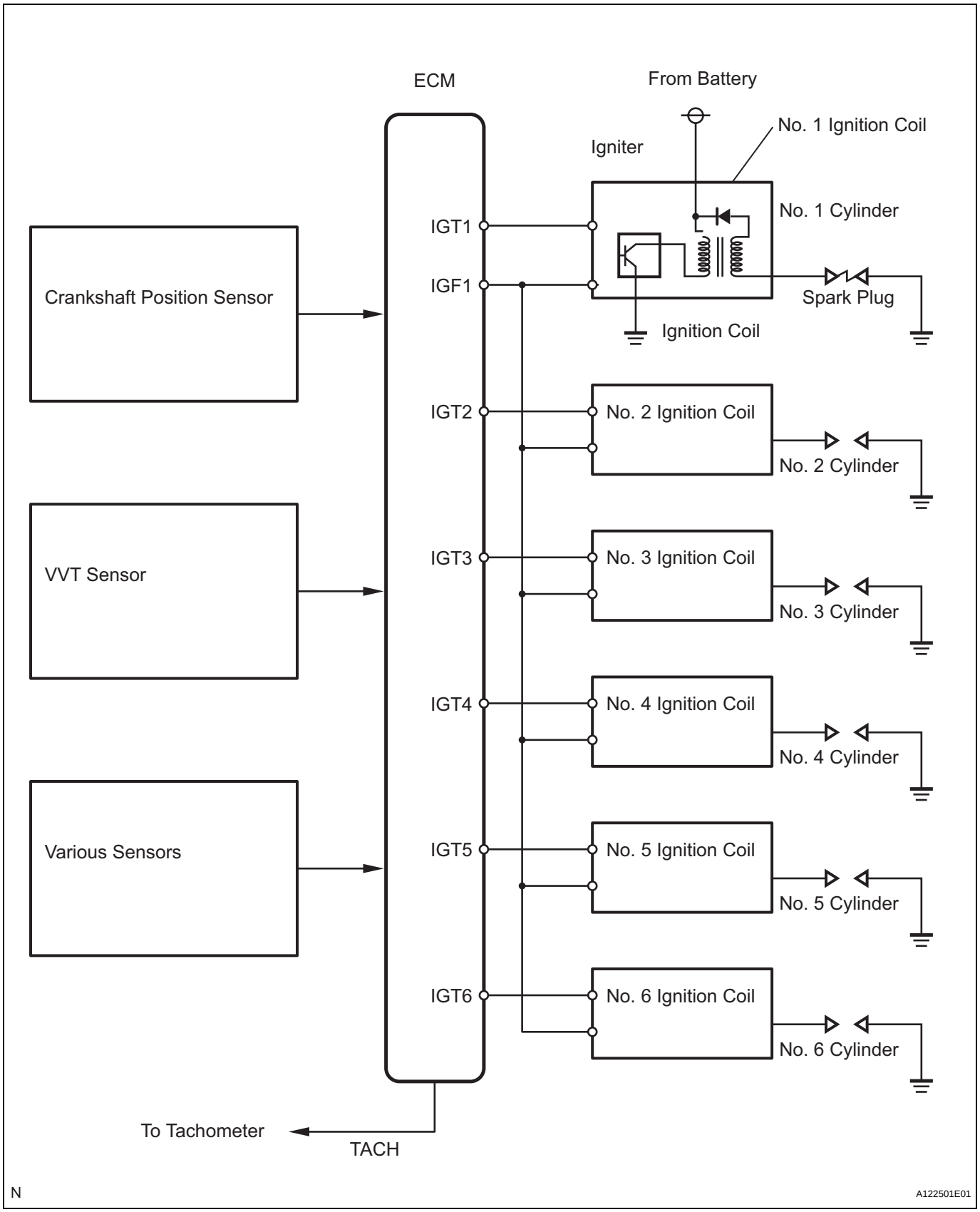
ECM
From Battery
No. 1 Ignition Coil
Igniter
No. 1 Cylinder
IGT1
IGF1
Crankshaft Position Sensor
Spark Plug
Ignition Coil
IGT2
No. 2 Ignition Coil
No. 2 Cylinder
VVT Sensor
IGT3
No. 3 Ignition Coil
No. 3 Cylinder
IGT4
No. 4 Ignition Coil
No. 4 Cylinder
Various Sensors
IGT5
No. 5 Ignition Coil
No. 5 Cylinder
IGT6
No. 6 Ignition Coil
No. 6 Cylinder
To Tachometer
TACH
N
A122501E01

ES

DTC No.	DTC Detection Conditions	Trouble Areas
P0351 P0352 P0353 P0354 P0355 P0356	No IGF signal to ECM while engine running (1 trip detection logic)	• Ignition system • Open or short in IGF1 or IGT circuit (1 to 6) between ignition coil with igniter and ECM • No. 1 to No. 6 ignition coils with igniters • ECM

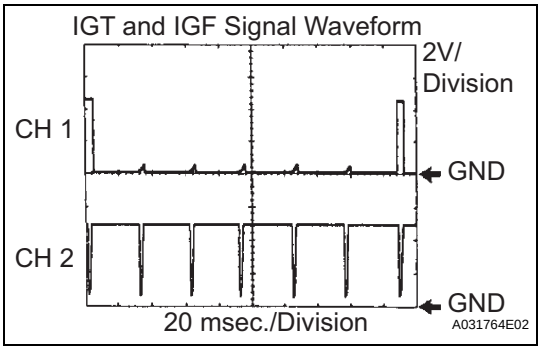

Reference: Inspection using an oscilloscope
While cranking or idling, check the waveform between terminals IGT(1 to 6) and E1, and IGF1 and E1 of the ECM connector.

Items	Contents
Terminals	CH1: IGT1, IGT2, IGT3, IGT4, IGT5, IGT6 - E1 CH2: IGF1 - E1
Equipment Settings	2 V/Division, 20 ms/Division
Conditions	Cranking or idling

MONITOR DESCRIPTION

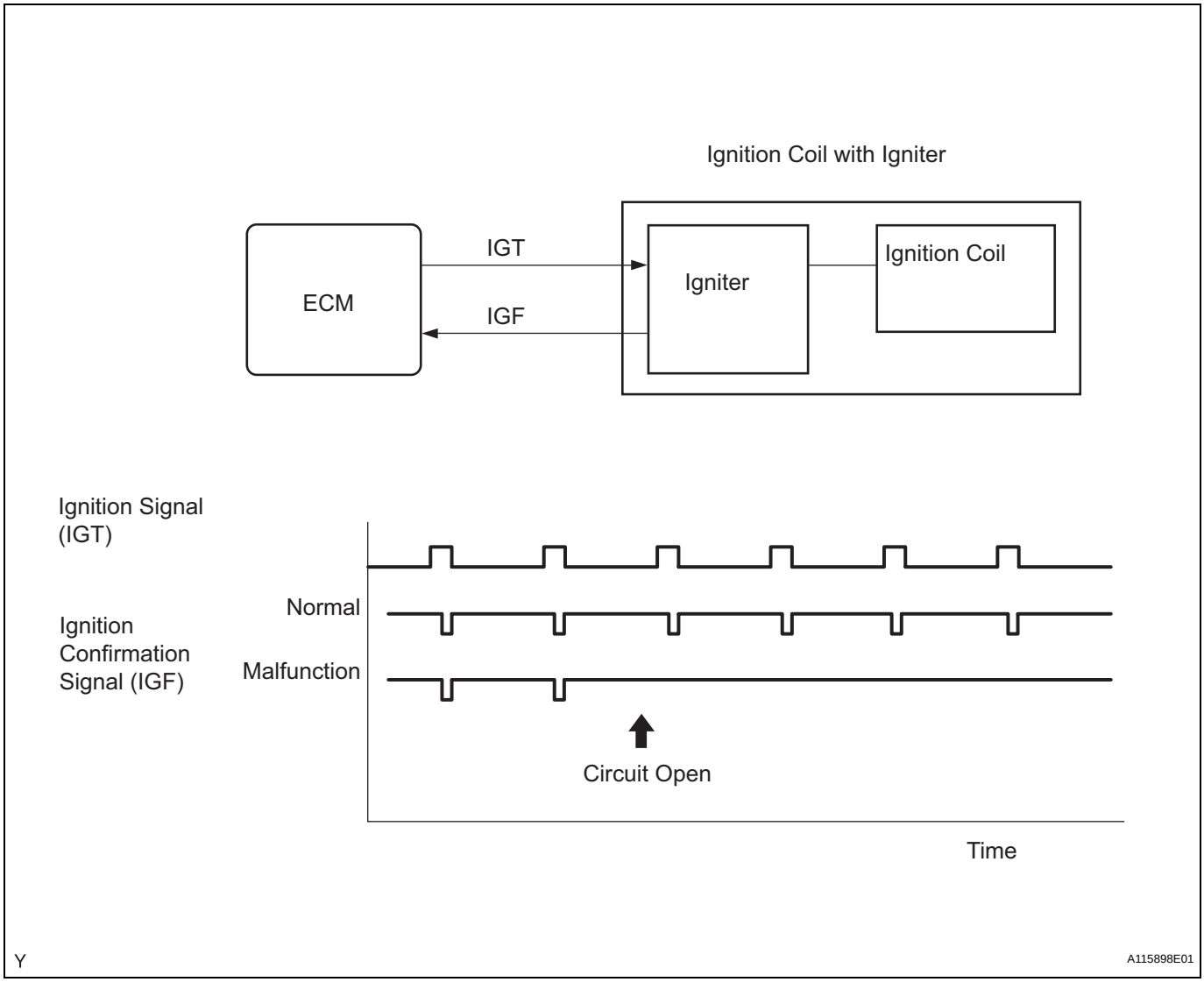

If the ECM does not receive any IGF signals despite transmitting the IGT signal, it interprets this as a fault in the igniter and sets a DTC.
If the malfunction is not repaired successfully, a DTC is set 1second after the engine is next started.

MONITOR STRATEGY

Related DTCs	P0351: Igniter (Cylinder 1) malfunction P0352: Igniter (Cylinder 2) malfunction P0353: Igniter (Cylinder 3) malfunction P0354: Igniter (Cylinder 4) malfunction P0355: Igniter (Cylinder 5) malfunction P0356: Igniter (Cylinder 6) malfunction
Required Sensors/Components (Main)	Igniter (Cylinder 1 to 6)
Required Sensors/Components (Related)	Crankshaft position sensor
Frequency of Operation	Continuous
Duration	0.256 seconds and 4 sparks
MIL Operation	Immediate
Sequence of Operation	None

TYPICAL ENABLING CONDITIONS

Monitor runs whenever following DTCs not present	None
Either of following conditions 1 or 2 met	-
1. Following conditions (a) and (b) met:	-
(a) Engine RPM	500 rpm or less
(b) Battery voltage	6 V or more
2. Following conditions (a) and (b) met:	-
(a) Engine RPM	More than 500 rpm
(b) Battery voltage	10 V or more
(c) Number of sparks after CPU is reset	5 sparks or more

TYPICAL MALFUNCTION THRESHOLDS

Ignition signal fail count	More than 2 times
Ignition signal fail count is on the right:	When IGF does not return despite sending IGT.

COMPONENT OPERATING RANGE

IGF signal	Igniter transmits IGF signal when it receives IGT signal from ECM

WIRING DIAGRAM

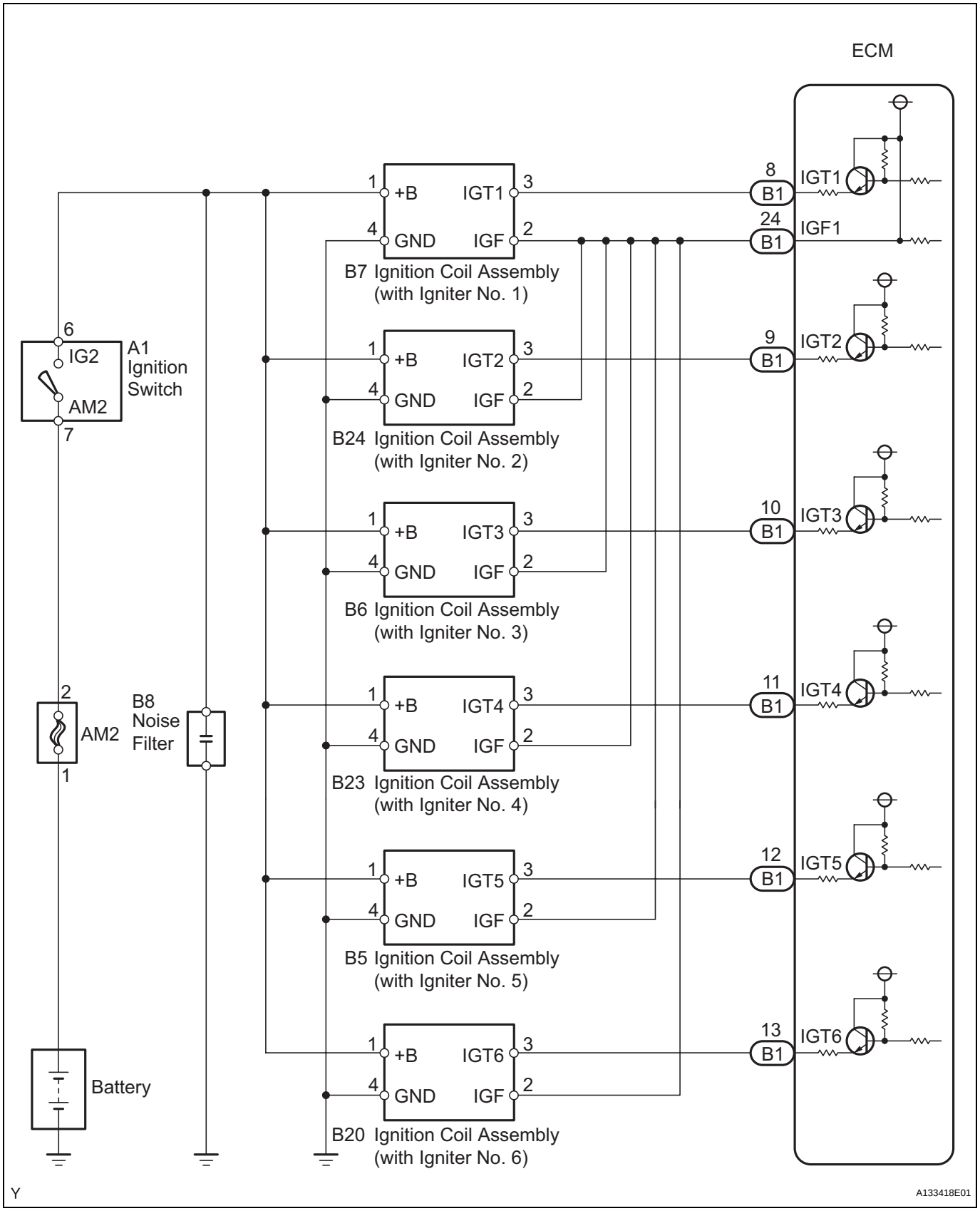

ES

INSPECTION PROCEDURE

HINT:
Read freeze frame data using an intelligent tester. Freeze frame data record the engine condition when malfunctions are detected. When troubleshooting, freeze frame data can help determine if the vehicle was moving or stationary, if the engine was warmed up or not, if the air-fuel ratio was lean or rich, and other data, from the time the malfunction occurred.

1	CHECK SPARK PLUG AND SPARK OF MISFIRING CYLINDER

(a) Check the spark plug and sparks of the misfiring cylinder (See page IG-3).

NG → **Go to step 4**

OK

2	CHECK HARNESS AND CONNECTOR (IGNITION COIL ASSEMBLY - ECM (IGF1 SIGNAL TERMINAL))

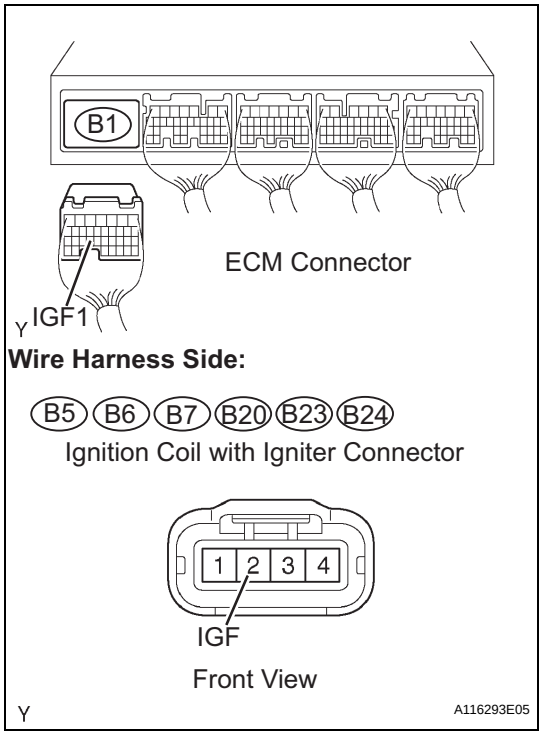

(a) Disconnect the B5, B6, B7, B20, B23 or B24 ignition coil with igniter connector.
(b) Disconnect the B1 ECM connector.
(c) Check the resistance.

Standard Resistance (Check for open)

Tester Connections	Specified Conditions
IGF (B7-2) - IGF1 (B1-24)	Below 1 Ω
IGF (B24-2) - IGF1 (B1-24)	
IGF (B6-2) - IGF1 (B1-24)	
IGF (B23-2) - IGF1 (B1-24)	
IGF (B5-2) - IGF1 (B1-24)	
IGF (B20-2) - IGF1 (B1-24)	

Standard Resistance (Check for short)

Tester Connections	Specified Conditions
IGF (B7-2) or IGF1 (B1-24) - Body ground	10 kΩ or higher
IGF (B24-2) or IGF1 (B1-24) - Body ground	
IGF (B6-2) or IGF1 (B1-24) - Body ground	
IGF (B23-2) or IGF1 (B1-24) - Body ground	
IGF (B5-2) or IGF1 (B1-24) - Body ground	
IGF (B20-2) or IGF1 (B1-24) - Body ground	

(d) Reconnect the ECM connector.
(e) Reconnect the ignition coil with igniter connector.

NG → **REPAIR OR REPLACE HARNESS OR CONNECTOR**

OK

3 INSPECT ECM (IGF1 VOLTAGE)

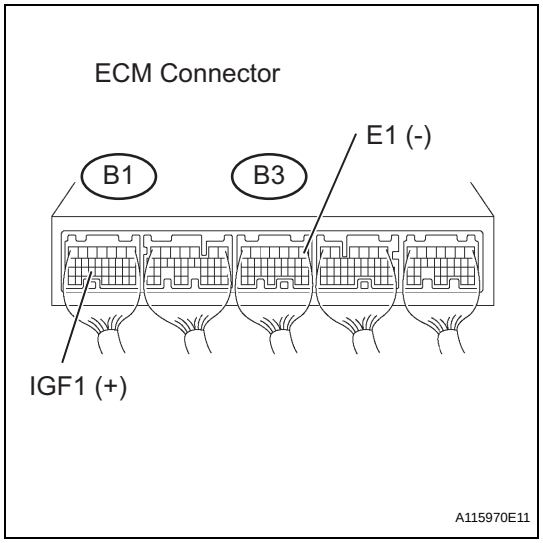

(a) Disconnect the ignition coil connector.
(b) Turn the ignition switch ON.
(c) Measure the voltage between the terminals of the B1 and B3 ECM connectors.

Standard Voltage

Tester Connection	Specified Condition
IGF1 (B1-24) - E1 (B3-1)	4.5 to 5.5 V

(d) Reconnect the ignition coil connector.

NG → **REPLACE ECM (See page ES-446)**

OK

REPLACE IGNITION COIL ASSEMBLY

4 CHECK HARNESS AND CONNECTOR (IGNITION COIL ASSEMBLY - ECM (IGT SIGNAL TERMINAL))

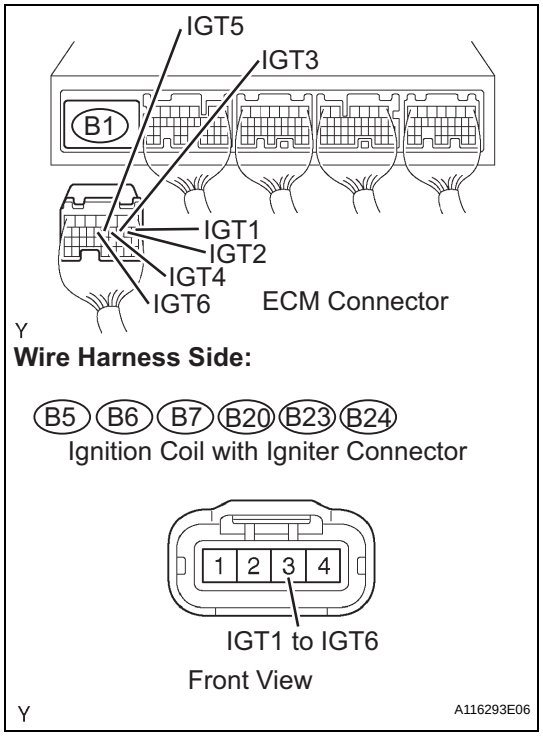

(a) Disconnect the B5, B6, B7, B20, B23 or B24 ignition coil with igniter connector.
(b) Disconnect the B1 ECM connector.
(c) Check the resistance.

Standard Resistance (Check for open)

Tester Connections	Specified Conditions
IGT1 (B7-3) - IGT1 (B1-8)	Below 1 Ω
IGT2 (B24-3) - IGT2 (B1-9)	
IGT3 (B6-3) - IGT3 (B1-10)	
IGT4 (B23-3) - IGT4 (B1-11)	
IGT5 (B5-3) - IGT5 (B1-12)	
IGT6 (B20-3) - IGT6 (B1-13)	

Standard Resistance (Check for short)

Tester Connections	Specified Conditions
IGT1 (B7-3) or IGT1 (B1-8) - Body ground	10 kΩ or higher
IGT2 (B24-3) or IGT2 (B1-9) - Body ground	
IGT3 (B6-3) or IGT3 (B1-10) - Body ground	
IGT4 (B23-3) or IGT4 (B1-11) - Body ground	
IGT5 (B5-3) or IGT5 (B1-12) - Body ground	
IGT6 (B20-3) or IGT6 (B1-13) - Body ground	

(d) Reconnect the ECM connector.
(e) Reconnect the ignition coil with igniter connector.

ES

NG → REPAIR OR REPLACE HARNESS OR CONNECTOR

OK

5 INSPECT ECM (IGT1, IGT2, IGT3, IGT4, IGT5, OR IGT6 VOLTAGE)

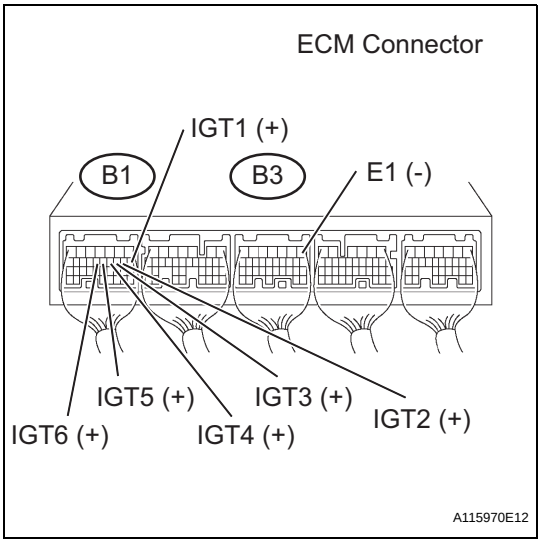

(a) Turn the ignition switch ON.
(b) Measure the voltage between the terminals of the B1 and B3 ECM connectors.

Standard Voltage

Tester Connections	Specified Conditions
IGT1 (B1-8) - E1 (B3-1)	0.1 to 4.5 V
IGT2 (B1-9) - E1 (B3-1)	
IGT3 (B1-10) - E1 (B3-1)	
IGT4 (B1-11) - E1 (B3-1)	
IGT5 (B1-12) - E1 (B3-1)	
IGT6 (B1-13) - E1 (B3-1)	

NG → REPLACE ECM (See page ES-446)

OK

6 INSPECT ECM (IGT1, IGT2, IGT3, IGT4, IGT5, OR IGT6 VOLTAGE)

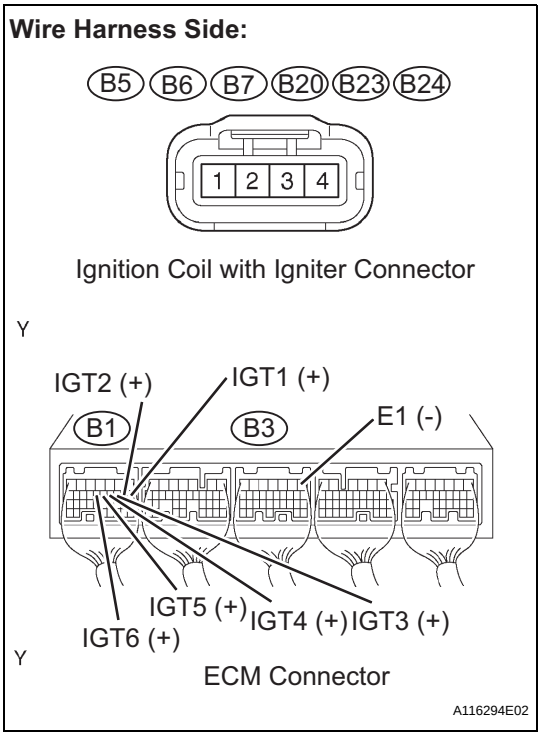

(a) Disconnect the B5, B6, B7, B20, B23 or B24 ignition coil connector.
(b) Turn the ignition switch ON.
(c) Measure the voltage between the terminals of the B1 and B3 ECM connectors.

Standard Voltage

Tester Connections	Specified Conditions
IGT1 (B1-8) - E1 (B3-1)	4.5 V or more
IGT2 (B1-9) - E1 (B3-1)	
IGT3 (B1-10) - E1 (B3-1)	
IGT4 (B1-11) - E1 (B3-1)	
IGT5 (B1-12) - E1 (B3-1)	
IGT6 (B1-13) - E1 (B3-1)	

(d) Reconnect the ignition coil connector.

NG → Go to step 8

OK

7 INSPECT IGNITION COIL ASSEMBLY (POWER SOURCE)

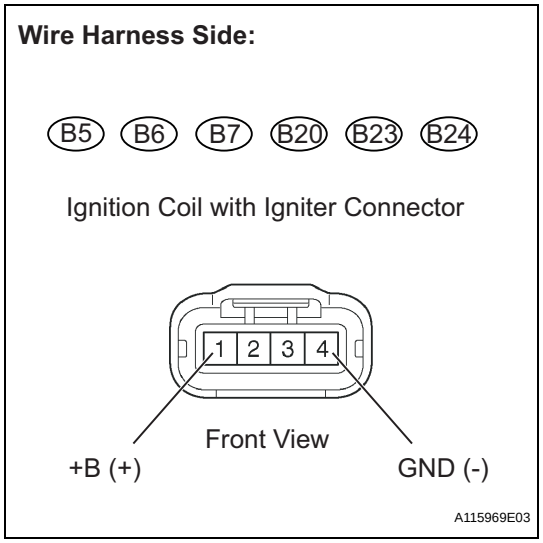

(a) Disconnect the B5, B6, B7, B20, B23 or B24 ignition coil with igniter connector.

(b) Check the resistance.

Standard Resistance (Check for open)

Tester Connections	Specified Conditions
GND (B7-4) - Body ground	Below 1 Ω
GND (B24-4) - Body ground	
GND (B6-4) - Body ground	
GND (B23-4) - Body ground	
GND (B5-4) - Body ground	
GND (B20-4) - Body ground	

(c) Turn the ignition switch ON.

(d) Measure the voltage between the terminals of the wire harness side connector.

Standard Voltage

Tester Connections	Specified Conditions
+B (B7-1) - GND (B7-4)	11 to 14 V
+B (B24-1) - GND (B24-4)	
+B (B6-1) - GND (B6-4)	
+B (B23-1) - GND (B23-4)	
+B (B5-1) - GND (B5-4)	
+B (B20-1) - GND (B20-4)	

(e) Reconnect the ignition coil with igniter connector.

OK → **REPLACE IGNITION COIL ASSEMBLY**

NG

8	CHECK HARNESS AND CONNECTOR (IGNITION COIL ASSEMBLY - IGNITION SWITCH)

Wire Harness Side:

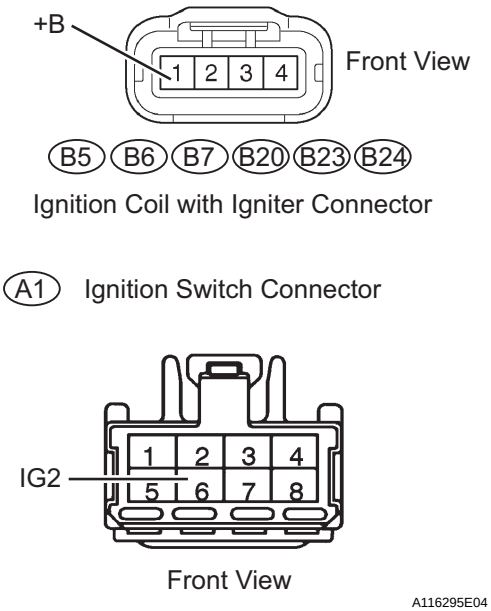

(a) Disconnect the B5, B6, B7, B20, B23 or B24 ignition coil with igniter connector.
(b) Disconnect the A1 ignition switch connector.
(c) Check the resistance.

Standard Resistance (Check for open)

Tester Connections	Specified Conditions
+B (B7-1) - IG2 (A1-6)	Below 1 Ω
+B (B24-1) - IG2 (A1-6)	
+B (B6-1) - IG2 (A1-6)	
+B (B23-1) - IG2 (A1-6)	
+B (B5-1) - IG2 (A1-6)	
+B (B20-1) - IG2 (A1-6)	

Standard Resistance (Check for short)

Tester Connections	Specified Conditions
+B (B7-1) or IG2 (A1-6) - Body ground	10 kΩ or higher
+B (B24-1) or IG2 (A1-6) - Body ground	
+B (B6-1) or IG2 (A1-6) - Body ground	
+B (B23-1) or IG2 (A1-6) - Body ground	
+B (B5-1) or IG2 (A1-6) - Body ground	
+B (B20-1) or IG2 (A1-6) - Body ground	

(d) Reconnect the ignition coil with igniter connector.
(e) Reconnect the ignition switch connector.

NG → **REPAIR OR REPLACE HARNESS OR CONNECTOR**

OK

REPLACE IGNITION COIL ASSEMBLY

DTC	P0420	Catalyst System Efficiency Below Threshold (Bank 1)

DTC	P0430	Catalyst System Efficiency Below Threshold (Bank 2)

MONITOR DESCRIPTION

The ECM uses sensors mounted in front of and behind the Three-Way Catalytic Converter (TWC) to monitor its efficiency.

The first sensor, the Air-Fuel Ratio (A/F) sensor, sends pre-catalyst information to the ECM. The second sensor, the Heated Oxygen (HO2) sensor, sends post-catalyst information to the ECM.

In order to detect any deterioration in the TWC, the ECM calculates the Oxygen Storage Capacity (OSC) of the TWC. This calculation is based on the voltage output of the HO2 sensor while performing active air-fuel ratio control, rather than the conventional detecting method, which uses the locus ratio.

The OSC value is an indication of the oxygen storage capacity of the TWC. When the vehicle is being driven with a warm engine, active air-fuel ratio control is performed for approximately 15 to 20 seconds. When it is performed, the ECM deliberately sets the air-fuel ratio to lean or rich levels. If a rich-lean cycle of the HO2 sensor is long, the OSC becomes greater. There is a direct correlation between the OSCs of the HO2 sensor and the TWC.

The ECM uses the OSC value to determine the state of the TWC. If any deterioration has occurred, it illuminates the MIL and sets a DTC.

DTC No.	DTC Detection Conditions	Trouble Areas
P0420	OSC value smaller than standard value under active air-fuel ratio control (2 trip detection logic)	• Gas leakage from exhaust system • A/F sensor (bank 1 sensor 1) • HO2 sensor (bank 1 sensor 2) • Exhaust manifold (TWC)
P0430	OSC value smaller than standard value under active air-fuel ratio control (2 trip detection logic)	• Gas leakage from exhaust system • A/F sensor (bank 2 sensor 1) • HO2 sensor (bank 2 sensor 2) • Exhaust manifold (TWC)

HINT:

- Bank 1 refers to the bank that includes cylinder No. 1.
- Bank 2 refers to the bank that does not include cylinder No. 1.
- Sensor 1 refers to the sensor closest to the engine assembly.
- Sensor 2 refers to the sensor farthest away from the engine assembly.

MONITOR STRATEGY

Related DTCs	P0420: Catalyst Deterioration P0430: Catalyst Deterioration
Required Sensors/Components (Main)	A/F sensor and heated oxygen sensor
Required Sensors/Components (Related)	Intake air temperature sensor, mass air flow meter, crankshaft position sensor and engine coolant temperature sensor
Frequency of Operation	Once per driving cycle
Duration	About 30 seconds
MIL Operation	2 driving cycles
Sequence of Operation	None

TYPICAL ENABLING CONDITIONS

Monitor runs whenever following DTCs not present	P0011 (VVT System 1 - Advance) P0012 (VVT System 1 - Retard) P0021 (VVT System 2 - Advance) P0022 (VVT System 2 - Retard) P0031, P0032, P0051, P0052 (A/F sensor heater - Sensor 1) P0037, P0038, P0057, P0058 (HO2 sensor Heater - Sensor 2) P0100 - P0103 (MAF meter) P0115 - P0118 (ECT sensor) P0120 - P0223, P2135 (TP sensor) P0125 (Insufficient ECT for closed loop) P0136, P0156 (HO2 Sensor - Sensor 2) P0171, P0172, P0174, P0175 (Fuel system) P0300 - P0306 (Misfire) P0335 (CKP sensor) P0340 (CMP sensor) P0351 - P0356 (Ignitor) P0500 (VSS) P2196, P2198 (A/F sensor - rationality) P2A00, P2A03 (A/F sensor - slow response)
Battery voltage	11 V or more
IAT	-10°C (14°F) or more
Engine coolant temperature sensor	75°C (167°F) or more
Atmospheric pressure coefficient	76 kPa (570 mmHg) or more
Idling	OFF
Engine RPM	Less than 3,200 rpm
A/F sensor status	Activated
Fuel system status	Closed loop
Engine load	10 to 70 %
All of the following conditions are met	Condition 1, 2 and 3
1. Mass air flow rate	5 to 70 g/sec
2. Front catalyst temperature (estimated)	650 to 840°C (1,202 to 1,544°F)
3. Rear catalyst temperature (estimated)	100 to 900°C (212 to 1,652°F)
Rear HO2 sensor monitor	Completed
Shift position	4th or higher

TYPICAL MALFUNCTION THRESHOLDS

Oxygen Storage Capacity (OSC) of Three-Way Catalytic Converter (TWC)	Less than 0.04 g

MONITOR RESULT

Refer to CHECKING MONITOR STATUS (See page ES-20).

CONFIRMATION DRIVING PATTERN

HINT:

Performing this confirmation pattern will activate the catalyst monitor. This is very useful for verifying the completion of a repair.

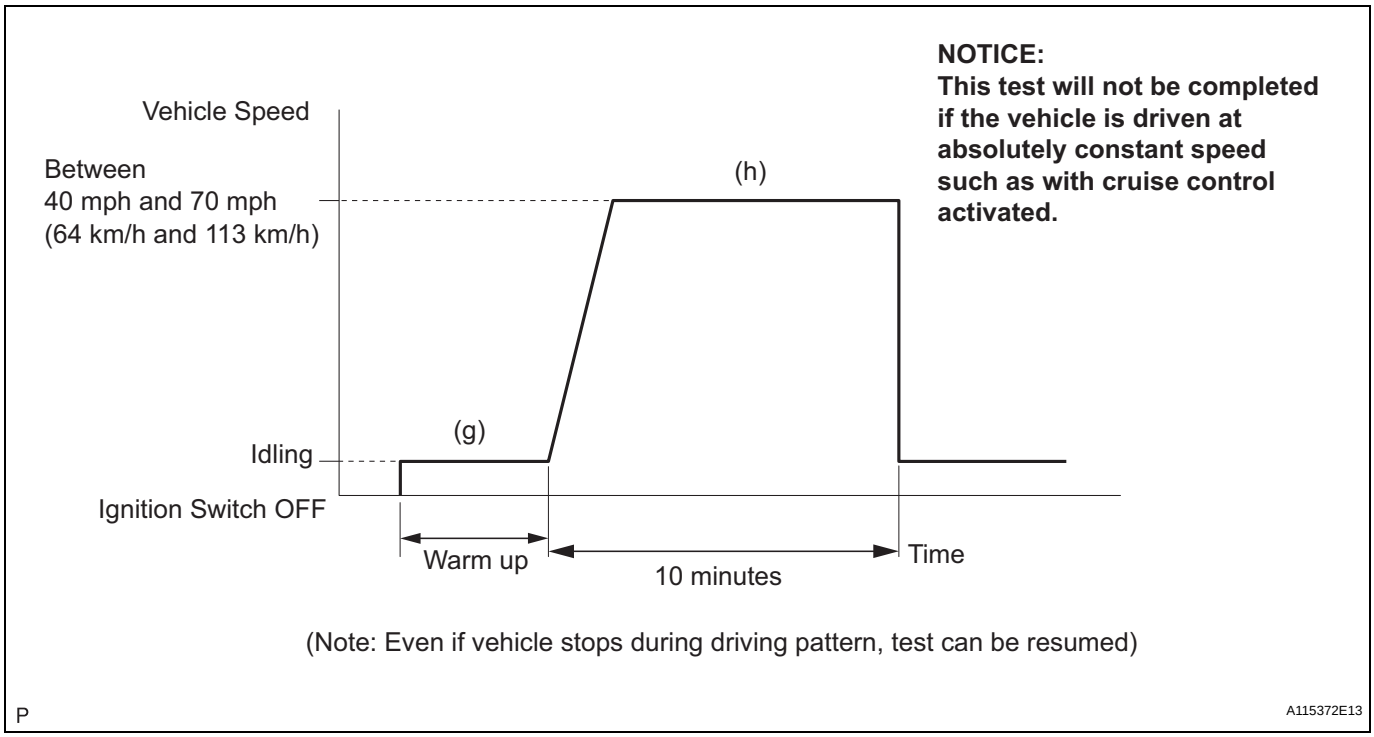

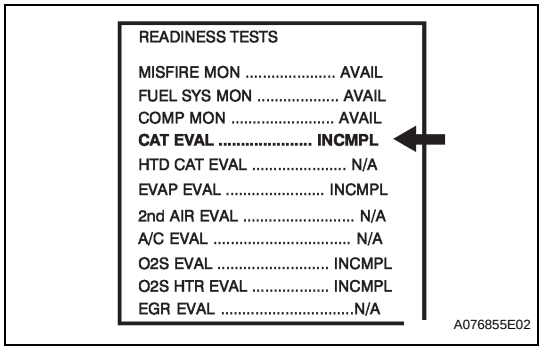

(a) Connect the intelligent tester to the DLC3.
(b) Turn the ignition switch ON.
(c) Turn the tester ON.
(d) Clear DTCs (where set) (See page ES-38).
(e) Select the following menu items: DIAGNOSIS / CARB OBD II / READINESS TESTS.
(f) Check that CAT EVAL is INCMPL (incomplete).
(g) Start the engine and warm it up.
(h) Drive the vehicle at between 40 mph and 70 mph (64 km/h and 113 km/h) for at least 10 minutes.
(i) Note the state of the Readiness Tests items. Those items will change to COMPL (complete) as CAT EVAL monitor operates.
(j) On the tester, select the following menu items: DIAGNOSIS / ENHANCED OBD II / DTC INFO / PENDING CODES and check if any DTCs (any pending DTCs) are set.
HINT:
If CAT EVAL does not change to COMPL, and any pending DTCs fail to set, extend the driving time.

CONDITIONING FOR SENSOR TESTING

HINT:
Perform the operation with the engine speeds and time durations described below prior to checking the waveforms of the A/F and HO2 sensors. This is in order to activate the sensors sufficiently to obtain the appropriate inspection results.

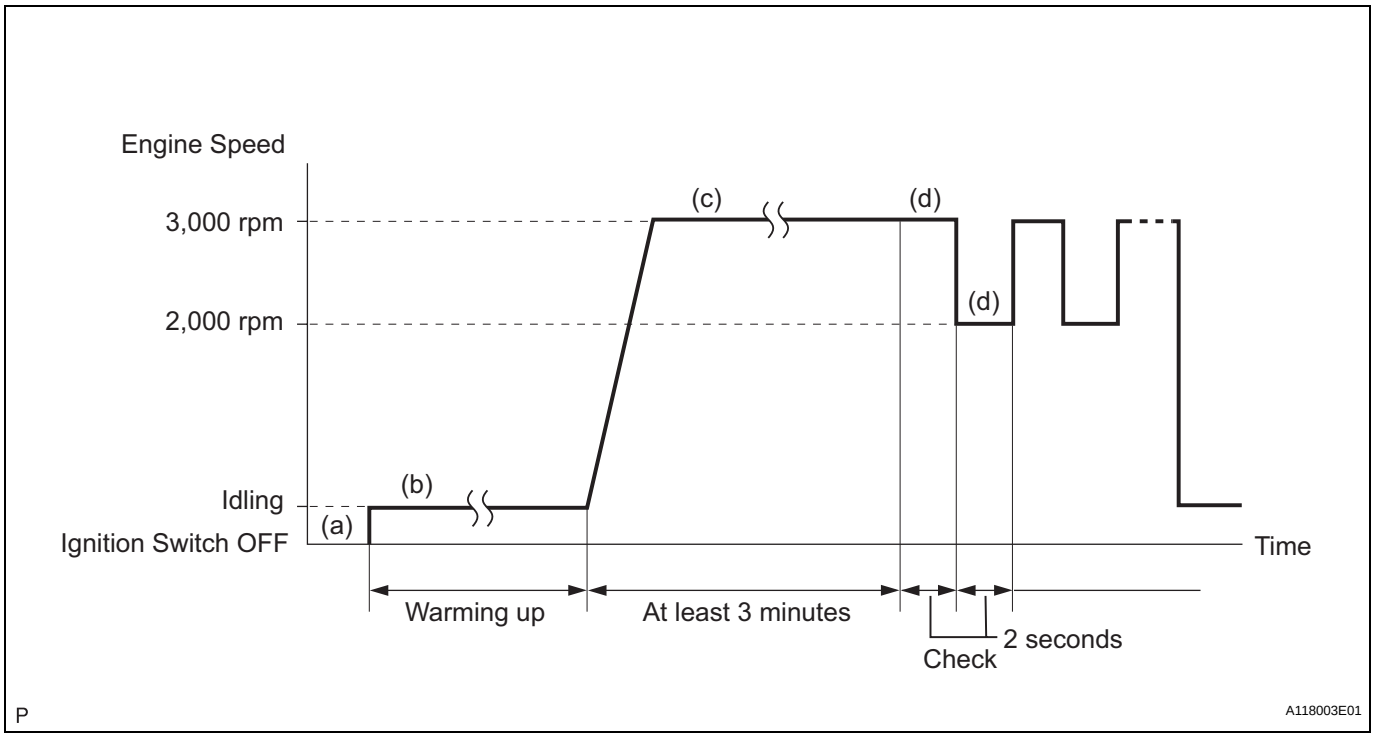

(a) Connect an intelligent tester to the DLC3.
(b) Start the engine and warm it up with all the accessories switched OFF, until the engine coolant temperature stabilizes.
(c) Run the engine at an engine speed of between 2,500 rpm and 3,000 rpm for at least 3 minutes.
(d) While running the engine at 3,000 rpm for 2 seconds and 2,000 rpm for 2 seconds, check the waveforms of the A/F and HO2 sensors using the tester.
HINT:

- If either of the voltage outputs of the Air-Fuel Ratio (A/F) or Heated Oxygen (HO2) sensor does not fluctuate, or either of the sensors makes a noise, the sensor may be malfunctioning.
- If the voltage outputs of both the sensors remain lean or rich, the air-fuel ratio may be extremely lean or rich. In such cases, perform the following A/F CONTROL using an intelligent tester.
- If the Three-Way Catalytic Converter (TWC) has deteriorated, the HO2 sensor (located behind the TWC) voltage output fluctuates up and down frequently, even under normal driving conditions (active air-fuel ratio control is not performed).

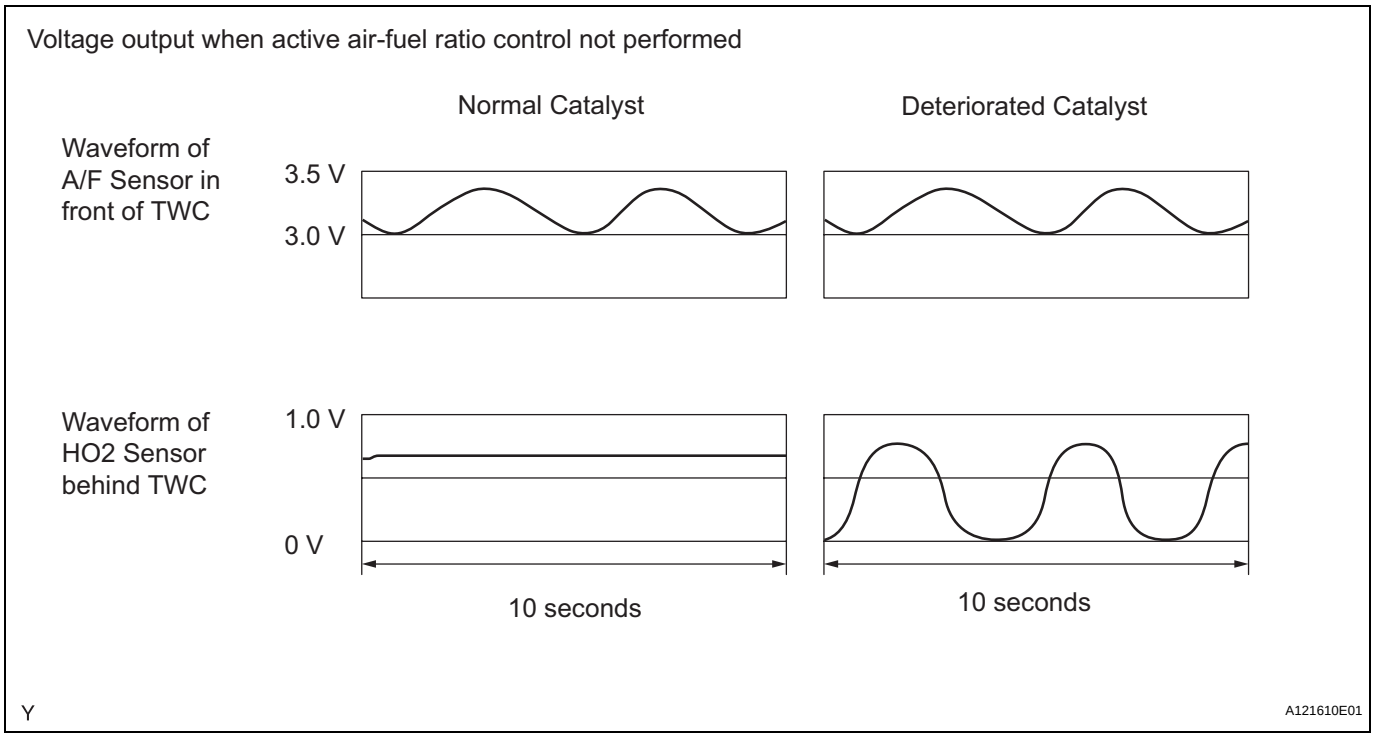

INSPECTION PROCEDURE

HINT:
Intelligent tester only:
Malfunctioning areas can be identified by performing the A/F CONTROL function provided in the ACTIVE TEST. The A/F CONTROL function can help to determine whether the Air-Fuel Ratio (A/F) sensor, Heated Oxygen (HO2) sensor and other potential trouble areas are malfunctioning.
The following instructions describe how to conduct the A/F CONTROL operation using an intelligent tester.
(1) Connect an intelligent tester to the DLC3.
(2) Start the engine and turn the tester ON.
(3) Warm up the engine at an engine speed of 2,500 rpm for approximately 90 seconds.
(4) Select the following menu items: DIAGNOSIS / ENHANCED OBD II / ACTIVE TEST / A/F CONTROL.
(5) Perform the A/F CONTROL operation with the engine in an idling condition (press the RIGHT or LEFT button to change the fuel injection volume).
(6) Monitor the voltage outputs of the A/F and HO2 sensors (AFS B1S1 and O2S B1S2 or AFS B2S1 and O2S B2S2) displayed on the tester.
HINT:

- The A/F CONTROL operation lowers the fuel injection volume by 12.5 % or increases the injection volume by 25 %.
- Each sensor reacts in accordance with increases and decreases in the fuel injection volume.

Standard

Tester Display (Sensor)	Injection Volumes	Status	Voltages
AFS B1S1 or AFS B2S1 (A/F)	+25 %	Rich	Less than 3.0
AFS B1S1 or AFS B2S1 (A/F)	-12.5 %	Lean	More than 3.35
O2S B1S2 or O2S B2S2 (HO2)	+25 %	Rich	More than 0.55
O2S B1S2 or O2S B2S2 (HO2)	-12.5 %	Lean	Less than 0.4

NOTICE:
The Air-Fuel Ratio (A/F) sensor has an output delay of a few seconds and the Heated Oxygen (HO2) sensor has a maximum output delay of approximately 20 seconds.

Case	A/F Sensor (Sensor 1) Output Voltage		HO2 Sensor (Sensor 2) Output Voltage		Main Suspected Trouble Areas
1	Injection volume +25 % -12.5 %		Injection volume +25 % -12.5 %		-
	Output voltage More than 3.35 V Less than 3.0 V		Output voltage More than 0.55 V Less than 0.4 V		
2	Injection volume +25 % -12.5 %		Injection volume +25 % -12.5 %		• A/F sensor • A/F sensor heater • A/F sensor circuit
	Output voltage Almost no reaction		Output voltage More than 0.55 V Less than 0.4 V		
3	Injection volume +25 % -12.5 %		Injection volume +25 % -12.5 %		• HO2 sensor • HO2 sensor heater • HO2 sensor circuit
	Output voltage More than 3.35 V Less than 3.0 V		Output voltage Almost no reaction		
4	Injection volume +25 % -12.5 %		Injection volume +25 % -12.5 %		• Injector • Fuel pressure • Gas leakage from exhaust system (Air-fuel ratio extremely lean or rich)
	Output voltage Almost no reaction		Output voltage Almost no reaction		

- Following the A/F CONTROL procedure enables technicians to check and graph the voltage outputs of both the A/F and HO2 sensors.
- To display the graph, select the following menu items on the tester: DIAGNOSIS / ENHANCED OBD II / ACTIVE TEST / A/F CONTROL / USER DATA / AFS B1S1 and O2S B1S2 or AFS B2S1 and O2S B2S2, and press the YES button and then the ENTER button followed by the F4 button.

HINT:
Read freeze frame data using an intelligent tester. Freeze frame data record the engine condition when malfunctions are detected. When troubleshooting, freeze frame data can help determine if the vehicle was moving or stationary, if the engine was warmed up or not, if the air-fuel ratio was lean or rich, and other data, from the time the malfunction occurred.

1	CHECK ANY OTHER DTCS OUTPUT (IN ADDITION TO DTC P0420 AND/OR P0430)

(a) Connect an intelligent tester to the DLC3.
(b) Turn the ignition switch ON and turn the tester ON.
(c) Select the following menu items: DIAGNOSIS / ENHANCED OBD II / DTC INFO / CURRENT CODES.
(d) Read DTCs.

Result

Display (DTC Output)	Proceed To
P0420 and/or P0430	A
P0420 and/or P0430 and other DTCs	B

HINT:
If any DTCs other than P0420 or P0430 are output, troubleshoot those DTCs first.

B → GO TO DTC CHART (See page ES-57)

A

2 PERFORM ACTIVE TEST USING INTELLIGENT TESTER (A/F CONTROL)

(a) Connect an intelligent tester to the DLC3.
(b) Start the engine and turn the tester ON.
(c) Warm up the engine at an engine speed of 2,500 rpm for approximately 90 seconds.
(d) Select the following menu items: DIAGNOSIS / ENHANCED OBD II / ACTIVE TEST / A/F CONTROL.
(e) Perform the A/F CONTROL operation with the engine in an idling condition (press the RIGHT or LEFT button to change the fuel injection volume).
(f) Monitor the voltage outputs of the A/F and HO2 sensors (AFS B1S1 and O2S B1S2 or AFS B2S1 and O2S B2S2) displayed on the tester.
HINT:
- The A/F CONTROL operation lowers the fuel injection volume by 12.5 % or increases the injection volume by 25 %.
- Each sensor reacts in accordance with increases and decreases in the fuel injection volume.

ES

Standard

Tester Display (Sensor)	Injection Volumes	Status	Voltages
AFS B1S1 or AFS B2S1 (A/F)	+25 %	Rich	Less than 3.0
AFS B1S1 or AFS B2S1 (A/F)	-12.5 %	Lean	More than 3.35
O2S B1S2 or O2S B2S2 (HO2)	+25 %	Rich	More than 0.55
O2S B1S2 or O2S B2S2 (HO2)	-12.5 %	Lean	Less than 0.4

Result

Status AFS B1S1 or AFS B2S1	Status O2S B1S2 or O2S B2S2	A/F Condition and A/F and HO2 Sensors Conditions	Misfires	Main Suspected Trouble Areas	Proceed To
Lean/Rich	Lean/Rich	Normal	-	• Three-Way Catalytic Converter (TWC) • Gas leakage from exhaust system	A
Lean	Lean/Rich	A/F sensor malfunction	-	• A/F sensor	B
Rich	Lean/Rich	A/F sensor malfunction	-	• A/F sensor	
Lean/Rich	Lean	HO2 sensor malfunction	-	• HO2 sensor • Gas leakage from exhaust system	C
Lean/Rich	Rich	HO2 sensor malfunction	-	• HO2 sensor • Gas leakage from exhaust system	

Status AFS B1S1 or AFS B2S1	Status O2S B1S2 or O2S B2S2	A/F Condition and A/F and HO2 Sensors Conditions	Misfires	Main Suspected Trouble Areas	Proceed To
Lean	Lean	Actual air-fuel ratio lean	May occur	• Extremely rich or lean actual air-fuel ratio • Gas leakage from exhaust system	A
Rich	Rich	Actual air-fuel ratio rich	-	• Extremely rich or lean actual air-fuel ratio • Gas leakage from exhaust system	

Lean: During A/F CONTROL, the A/F sensor output voltage (AFS) is consistently more than 3.35 V, and the HO2 sensor output voltage (O2S) is consistently less than 0.4 V.
Rich: During A/F CONTROL, the AFS is consistently less than 3.0 V, and the O2S is consistently more than 0.55 V.
Lean/Rich: During A/F CONTROL of the ACTIVE TEST, the output voltage of the HO2 sensor alternates correctly.

B → **CHECK AND REPLACE AIR FUEL RATIO SENSOR**

C → **CHECK AND REPLACE HEATED OXYGEN SENSOR, AND CHECK AND REPAIR EXHAUST GAS LEAKAGE**

A

3 CHECK FOR EXHAUST GAS LEAKAGE

OK:
No gas leakage.

NG → **REPAIR OR REPLACE EXHAUST GAS LEAKAGE POINT**

OK

REPLACE THREE-WAY CATALYTIC CONVERTER

DTC	P043E	Evaporative Emission System Reference Orifice Clog Up

DTC	P043F	Evaporative Emission System Reference Orifice High Flow

DTC SUMMARY

DTCs	Monitoring Items	Malfunction Detection Conditions	Trouble Areas	Detection Timings	Detection Logic
P043E	Reference orifice clogged	P043E, P043F, P2401, P2402 and P2419 present when one of following conditions met during key-off EVAP monitor: • EVAP pressure just after reference pressure measurement greater than -1 kPa-g (-7.5 mmHg-g) • Reference pressure less than -4.85 kPa-g (-36.4 mmHg-g) • Reference pressure greater than -1.057 kPa-g (-7.93 mmHg-g) • Reference pressure not saturated • Reference pressure difference between first and second 0.7 kPa-g (5.25 mmHg-g) or more HINT: Typical example values	• Canister pump module (Reference orifice, leak detection pump, vent valve) • Connector/wire harness (Canister pump module - ECM) • EVAP system hose (pipe from air inlet port to canister pump module, canister filter, fuel tank vent hose) • ECM	While ignition switch OFF	2 trip
P043F	Reference orifice high-flow		• Canister pump module (Reference orifice, leak detection pump, vent valve) • Connector/wire harness (Canister pump module - ECM) • EVAP system hose (pipe from air inlet port to canister pump module, canister filter, fuel tank vent hose) • ECM	While ignition switch OFF	2 trip

HINT:
The reference orifice is located inside the canister pump module.

DESCRIPTION

The description can be found in the EVAP (Evaporative Emission) System (See page ES-352).

INSPECTION PROCEDURE

Refer to the EVAP System (See page ES-357).

MONITOR DESCRIPTION

5 hours* after the ignition switch is turned to OFF, the leak detection pump creates negative pressure (vacuum) in the EVAP system. The ECM monitors for leaks and actuator malfunctions based on the EVAP pressure.
HINT:
*: If the engine coolant temperature is not below 35°C (95°F) 5 hours after the ignition switch is turned to OFF, the monitor check starts 2 hours later. If it is still not below 35°C (95°F) 7 hours after the ignition switch is turned to OFF, the monitor check starts 2.5 hours later.

Sequence	Operations	Descriptions	Duration
-	ECM activation	Activated by soak timer, 5 hours (7 or 9.5 hours) after ignition switch turned to OFF.	-

Sequence	Operations	Descriptions	Duration
A	Atmospheric pressure measurement	Vent valve turned OFF (vent) and EVAP system pressure measured by ECM in order to register atmospheric pressure. If pressure in EVAP system not between 70 kPa-a and 110 kPa-a (525 mmHg-a and 825 mmHg-a), ECM cancels EVAP system monitor.	10 seconds
B	First reference pressure measurement	In order to determine reference pressure, leak detection pump creates negative pressure (vacuum) through reference orifice and then ECM checks if leak detection pump and vent valve operate normally.	60 seconds
C	EVAP system pressure measurement	Vent valve turned ON (closed) to shut EVAP system. Negative pressure (vacuum) created in EVAP system, and EVAP system pressure then measured. Write down measured value as will be used in leak check. If EVAP pressure does not stabilize within 15 minutes, ECM cancels EVAP system monitor.	15 minutes*
D	Purge VSV monitor	Purge VSV opened and then EVAP system pressure measured by ECM. Large increase indicates normality.	10 seconds
E	Second reference pressure measurement	After second reference pressure measurement, leak check performed by comparing first and second reference pressure. If stabilized system pressure higher than second reference pressure, ECM determines that EVAP system leaking.	60 seconds
F	Final check	Atmospheric pressure measured and then monitoring result recorded by ECM.	-

* If only a small amount of fuel is in the fuel tank, it takes longer for the EVAP pressure to stabilize.

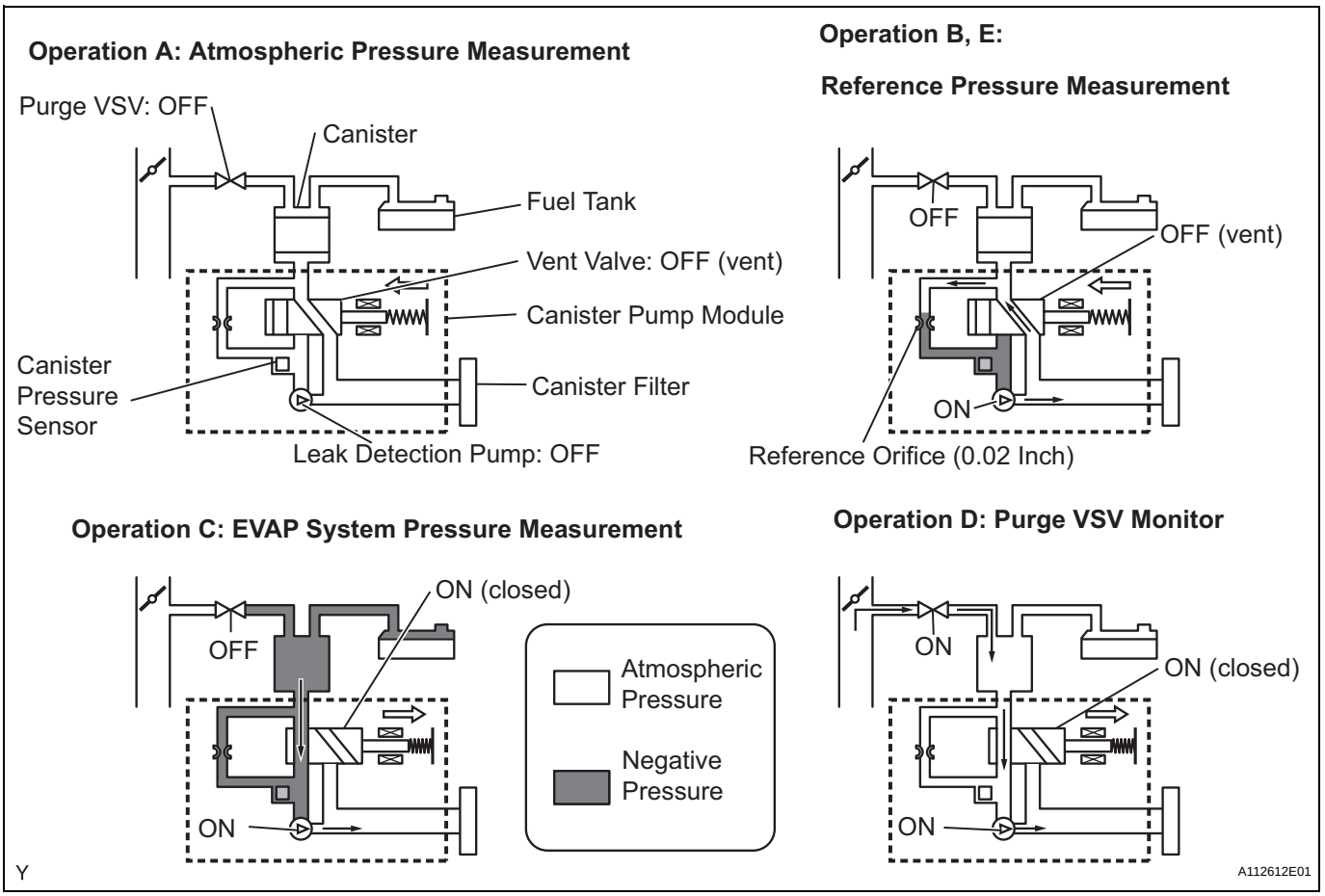

(a) P043E: Reference orifice clogged

In operation B, the leak detection pump creates negative pressure (vacuum) through the reference orifice. The EVAP system pressure is then measured by the ECM, using the canister pressure sensor, to determine the reference pressure. If the pressure is lower than -4.85 kPa-g (-36.4 mmHg-g), the ECM interprets this as a clog malfunction in the reference orifice, and stops the EVAP system monitor. The ECM then illuminates the MIL and sets the DTC (2 trip detection logic).

EVAP Pressure when Reference Orifice Clogged:

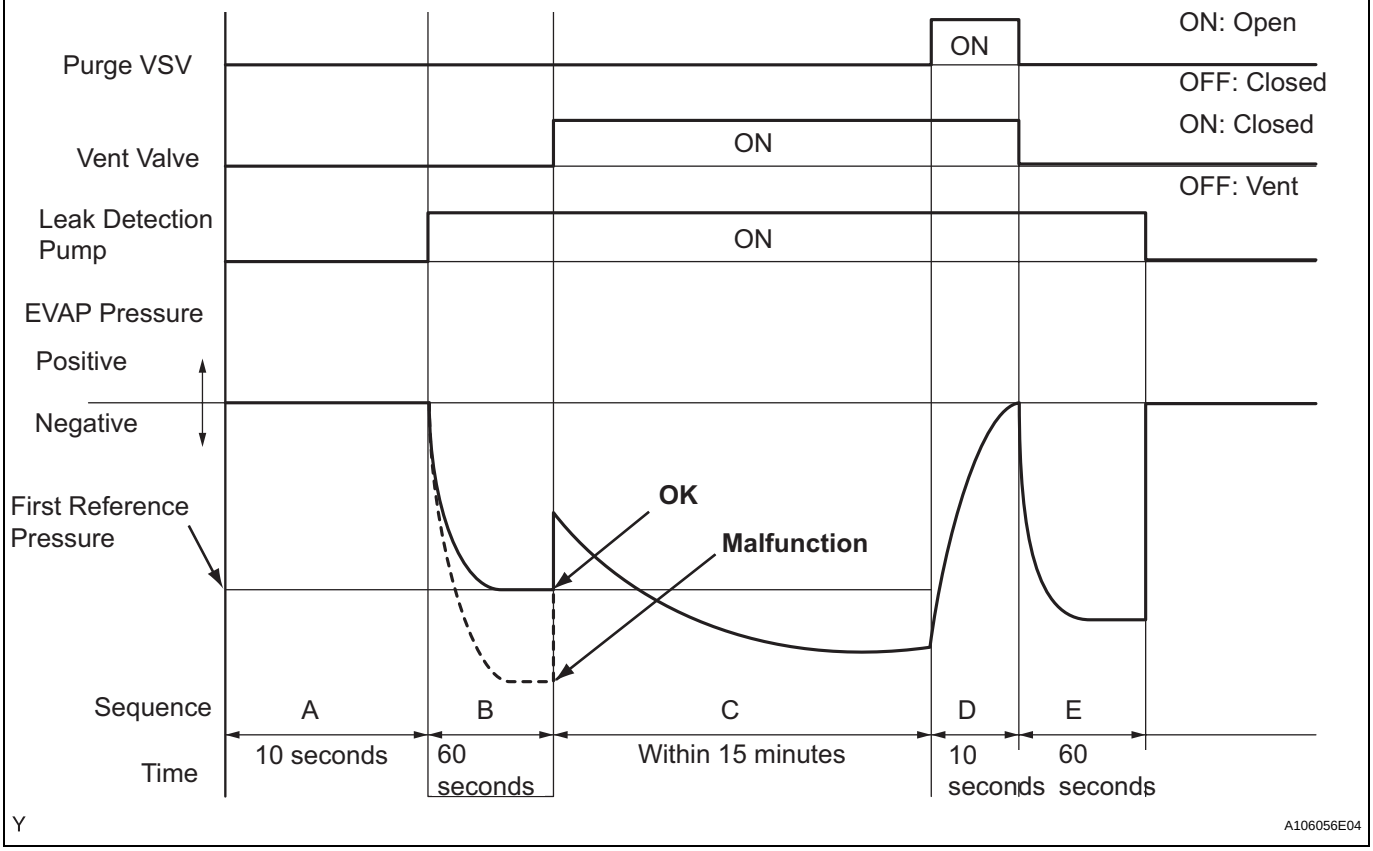

(b) P043F: Reference orifice high-flow

In operation B, the leak detection pump creates negative pressure (vacuum) through the reference orifice. The EVAP system pressure is then measured by the ECM using the canister pressure sensor to determine the reference pressure. If the pressure is higher than -1.057 kPa-g (-7.93 mmHg-g), the ECM interprets this as a high-flow malfunction in the reference orifice, and stops the EVAP system monitor. The ECM then illuminates the MIL and sets the DTC (2 trip detection logic).

EVAP Pressure when Reference Orifice High-flow Malfunction:

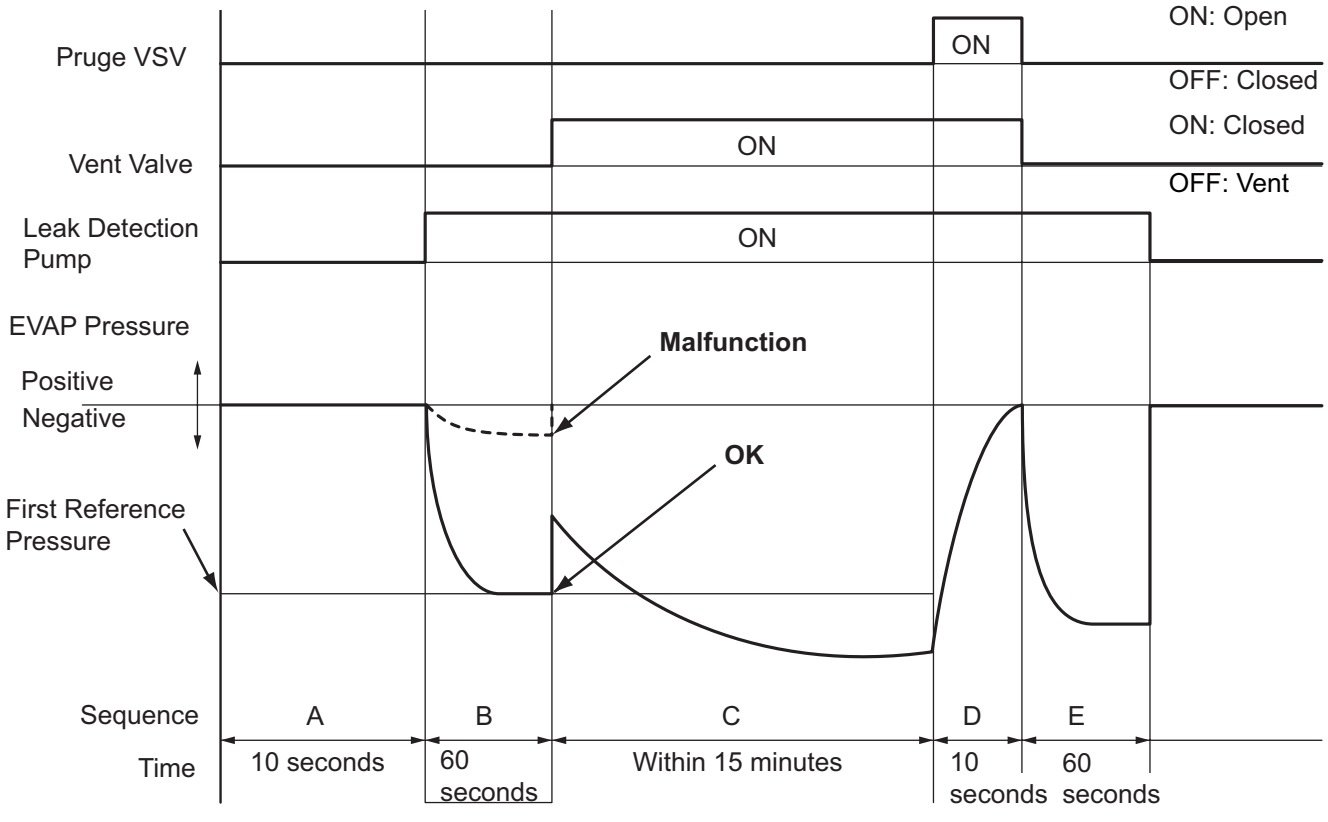

ES

MONITOR STRATEGY

Required Sensors/Components	Canister pump module
Frequency of Operation	Once per driving cycle
Duration	Within 2 minutes
MIL Operation	2 driving cycles
Sequence of Operation	None

TYPICAL ENABLING CONDITIONS

Monitor runs whenever following DTCs not present	None
EVAP key-off monitor runs when all of following conditions met	-
Atmospheric pressure	70 to 110 kPa-a (525 to 825 mmHg-a)
Battery voltage	10.5 V or more
Vehicle speed	Below 2.5 mph (4 km/h)
Ignition switch	OFF
Time after key off	5 or 7 or 9.5 hours
Canister pressure sensor malfunction (P0450, P0451, P0452 and P0453)	Not detected
Purge VSV	Not operated by scan tool
Vent valve	Not operated by scan tool
Leak detection pump	Not operated by scan tool
Both of following conditions met before key off	Conditions 1 and 2
1. Duration that vehicle driven	5 minutes or more
2. EVAP purge operation	Performed

ECT	4.4° to 35°C (40° to 95°F)
IAT	4.4°to 35°C (40° to 95°F)

1. Key-off monitor sequence 1 to 8

1. Atmospheric pressure measurement

Next sequence run if following condition set	-
Atmospheric pressure change	Less than 0.3 kPa-g (2.25 mmHg-g) in 1 second

2. First reference pressure measurement

Next sequence run if all of following conditions set	Condition 1, 2 and 3
1. EVAP pressure just after reference pressure measurement start	-1 kPa-g (-7.5 mmHg-g) or less
2. Reference pressure	-4.85 to -1.057 kPa-g (-36.4 to -7.93 mmHg-g)
3. Reference pressure	Saturated within 60 seconds

3. Vent valve stuck closed check

Next sequence run if following condition set	-
EVAP pressure change after vent valve ON (closed)	0.3 kPa-g (2.25 mmHg-g) or more

4. Vacuum introduction

Next sequence run if following condition set	-
EVAP pressure	Saturated within 15 minutes

5. Purge VSV stuck closed check

Next sequence run if following condition set	-
EVAP pressure change after purge VSV ON (open)	0.3 kPa-g (2.25 mmHg-g) or more

6. Second reference pressure measurement

Next sequence run if all of following conditions set	Condition 1, 2, 3 and 4
1. EVAP pressure just after reference pressure	-1 kPa-g (-7.5 mmHg-g) or less
2. Reference pressure	-4.85 to -1.057 kPa-g (-36.4 to -7.93 mmHg-g)
3. Reference pressure	Saturated within 60 seconds
4. Reference pressure difference between first and second	Less than 0.7 kPa-g (5.25 mmHg-g)

7. Leak check

Next sequence run if following condition set	-
EVAP pressure when vacuum introduction complete	Second reference pressure or less

8. Atmospheric pressure measurement

EVAP monitor complete if following condition set	-
Atmospheric pressure difference between sequence 1 and 8	Within 0.3 kPa-g (2.25 mmHg-g)

TYPICAL MALFUNCTION THRESHOLDS

"Saturated" indicates that the EVAP pressure change is less than 0.286 kPa-g (2.14 mmHg-g) in 60 seconds.

One of following conditions met	-
EVAP pressure just after reference pressure measurement start	More than -1 kPa-g (-7.5 mmHg-g)
Reference pressure	Less than -4.85 kPa-g (-36.4 mmHg-g)
Reference pressure	-1.057 kPa-g (-7.93 mmHg-g) or more
Reference pressure	Not saturated within 60 seconds
Reference pressure difference between first and second	0.7 kPa-g (5.25 mmHg-g) or more

MONITOR RESULT

Refer to CHECKING MONITOR STATUS (See page ES-20).

DTC	P0441	Evaporative Emission Control System Incorrect Purge Flow

DTC SUMMARY

DTC	Monitoring Items	Malfunction Detection Conditions	Trouble Areas	Detection Timings	Detection Logic
P0441	Purge VSV (Vacuum Switching Valve) stuck open	Leak detection pump creates negative pressure (vacuum) in EVAP system and EVAP system pressure measured. Reference pressure measured at start and at end of leak check. If stabilized pressure higher than [second reference pressure x 0.2], ECM determines that purge VSV stuck open	• Purge VSV • Connector/wire harness (Purge VSV - ECM) • ECM • Canister pump module • Leakage from EVAP system	While ignition switch OFF	2 trip
	Purge VSV stuck closed	After EVAP leak check performed, purge VSV turned ON (open), and atmospheric air introduced into EVAP system. Reference pressure measured at start and at end of check. If pressure does not return to near atmospheric pressure, ECM determines that purge VSV stuck closed	• Purge VSV • Connector/wire harness (Purge VSV - ECM) • ECM • Canister pump module • Leakage from EVAP system	While ignition switch OFF	2 trip
	Purge flow	While engine running, following conditions successively met: • Negative pressure not created in EVAP system when purge VSV turned ON (open) • EVAP system pressure change less than 0.5 kPa-g (3.75 mmHg-g) when vent valve turned ON (closed) • Atmospheric pressure change before and after purge flow monitor less than 0.1 kPa-g (0.75 mmHg-g)	• Purge VSV • Connector/wire harness (Purge VSV - ECM) • Leakage from EVAP line (Purge VSV - Intake manifold) • ECM	While engine running	2 trip

DESCRIPTION

The description can be found in the EVAP (Evaporative Emission) System (See page ES-352).

INSPECTION PROCEDURE

Refer to the EVAP System (See page ES-357).

MONITOR DESCRIPTION

The two monitors, Key-Off and Purge Flow, are used to detect malfunctions relating to DTC P0441. The Key-Off monitor is initiated by the ECM internal timer, known as the soak timer, 5 hours* after the ignition switch is turned to OFF. The purge flow monitor runs while the engine is running.

1. KEY-OFF MONITOR

   5 hours* after the ignition switch is turned to OFF, the leak detection pump creates negative pressure (vacuum) in the EVAP system. The ECM monitors for leaks and actuator malfunctions based on the EVAP pressure.

   HINT:

   *: If the engine coolant temperature is not below 35°C (95°F) 5 hours after the ignition switch is turned to OFF, the monitor check starts 2 hours later. If it is still not below 35°C (95°F) 7 hours after the ignition switch is turned to OFF, the monitor check starts 2.5 hours later.

Sequence	Operations	Descriptions	Duration
-	ECM activation	Activated by soak timer, 5 hours (7 or 9.5 hours) after ignition switch turned to OFF.	-

Sequence	Operations	Descriptions	Duration
A	Atmospheric pressure measurement	Vent valve turned OFF (vent) and EVAP system pressure measured by ECM in order to register atmospheric pressure. If pressure in EVAP system not between 70 kPa-a and 110 kPa-a (525 mmHg-a and 825 mmHg-a), ECM cancels EVAP system monitor.	10 seconds
B	First reference pressure measurement	In order to determine reference pressure, leak detection pump creates negative pressure (vacuum) through reference orifice and then ECM checks if leak detection pump and vent valve operate normally.	60 seconds
C	EVAP system pressure measurement	Vent valve turned ON (closed) to shut EVAP system. Negative pressure (vacuum) created in EVAP system, and EVAP system pressure then measured. Write down measured value as will be used in leak check. If EVAP pressure does not stabilize within 15 minutes, ECM cancels EVAP system monitor.	15 minutes*
D	Purge VSV monitor	Purge VSV opened and then EVAP system pressure measured by ECM. Large increase indicates normality.	10 seconds
E	Second reference pressure measurement	After second reference pressure measurement, leak check performed by comparing first and second reference pressure. If stabilized system pressure higher than second reference pressure, ECM determines that EVAP system leaking.	60 seconds
F	Final check	Atmospheric pressure measured and then monitoring result recorded by ECM.	-

* If only a small amount of fuel is in the fuel tank, it takes longer for the EVAP pressure to stabilize.

Operation A: Atmospheric Pressure Measurement

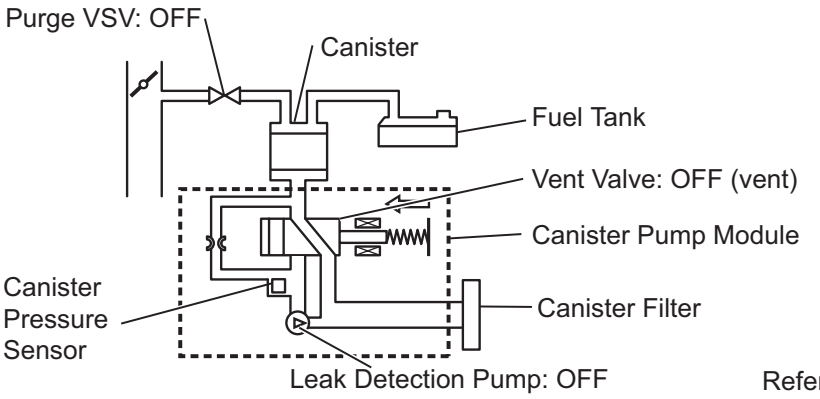

Operation B, E:

Reference Pressure Measurement

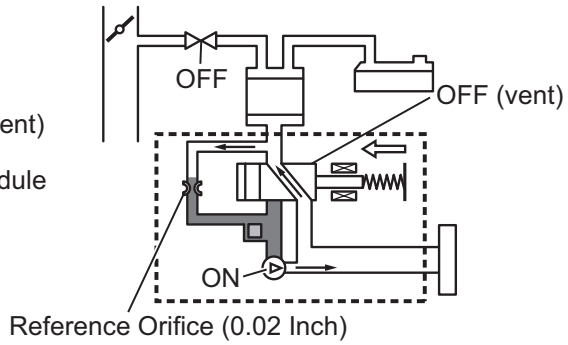

Operation C: EVAP System Pressure Measurement

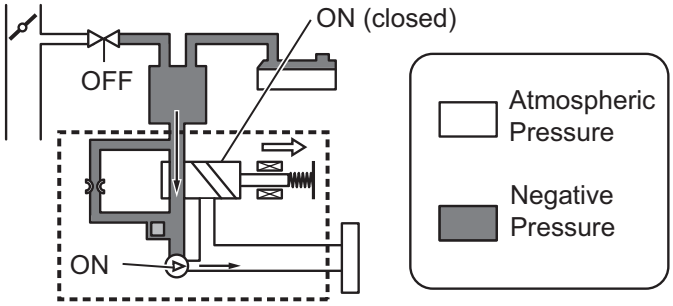

Operation D: Purge VSV Monitor

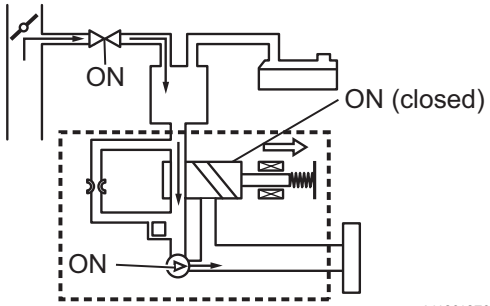

Y

A112612E01

(a) Purge VSV stuck open

In operation C, the leak detection pump creates negative pressure (vacuum) in the EVAP system. The EVAP system pressure is then measured by the ECM using the canister pressure sensor. If the stabilized system pressure is higher than [second reference pressure x 0.2], the ECM interprets this as the purge VSV (Vacuum Switching Valve) being stuck open. The ECM illuminates the MIL and sets the DTC (2 trip detection logic).

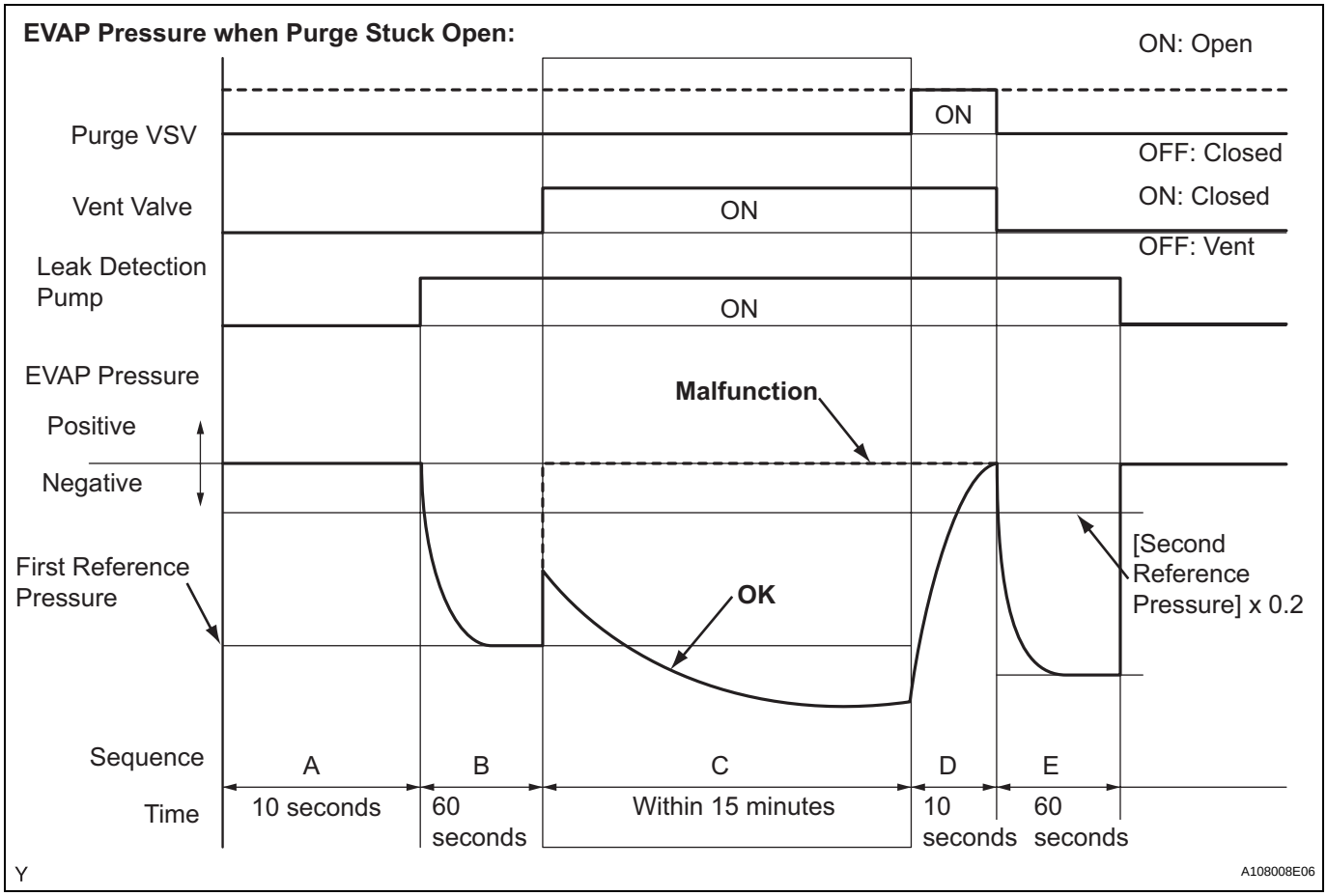

(b) Purge VSV stuck closed

In operation D, the canister pressure sensor measures the EVAP system pressure. The pressure measurement for purge VSV monitor is begun when the purge VSV is turned ON (open) after the EVAP leak check. When the measured pressure indicates an increase of 0.3 kPa-g (2.25 mmHg-g) or more, the purge VSV is functioning normally. If the pressure does not increase, the ECM interprets this as the purge VSV being stuck closed. The ECM illuminates the MIL and sets the DTC (2 trip detection logic).

EVAP Pressure when Purge VSV Stuck Closed:

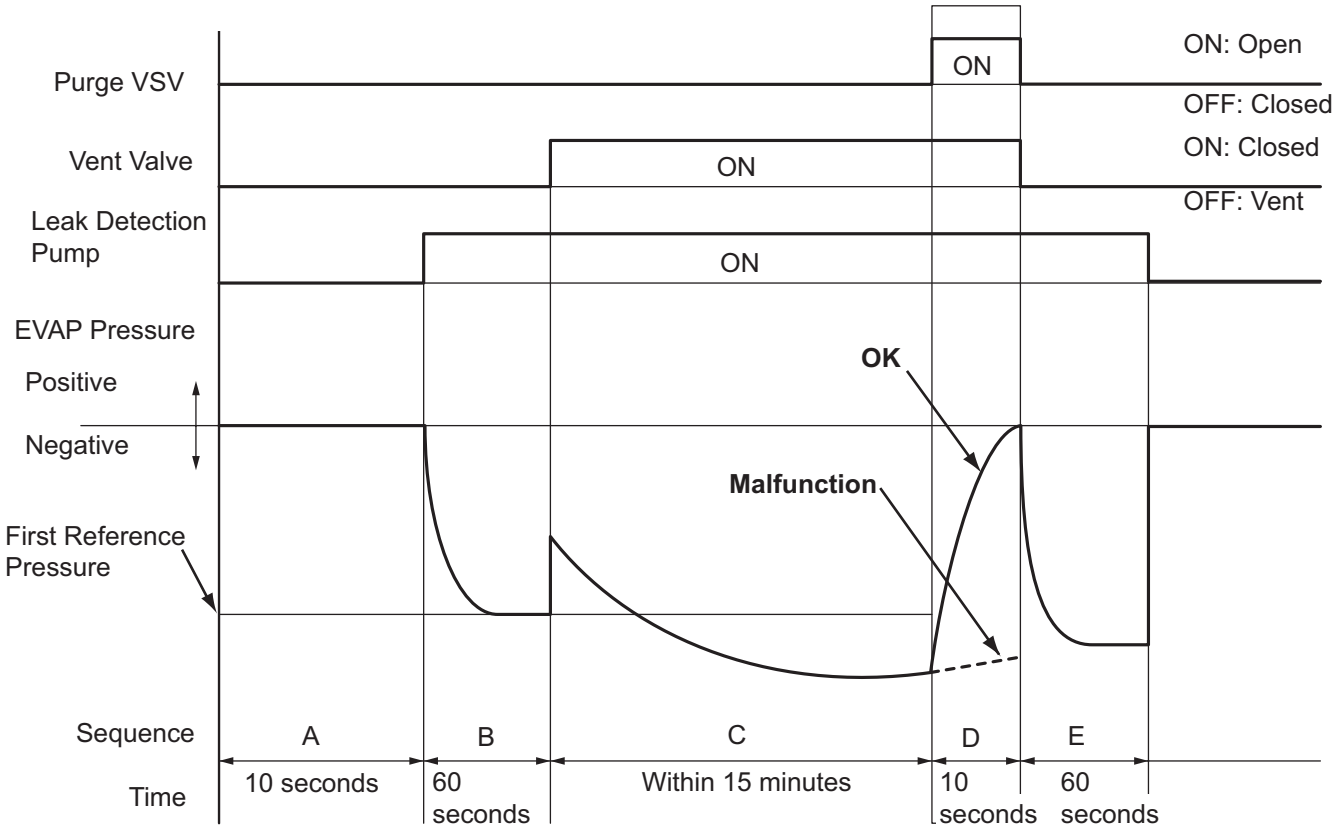

2. PURGE FLOW MONITOR

EVAP Pressure During Purge Flow Monitor:

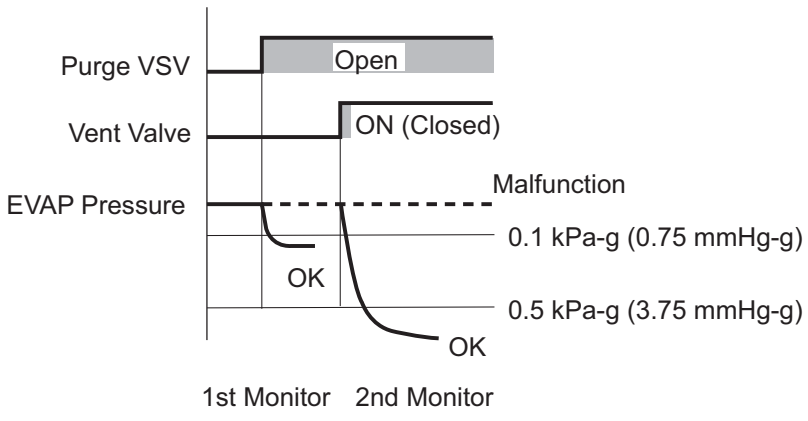

The purge flow monitor consists of the two step monitors. The 1st monitor is conducted every time and the 2nd monitor is activated if necessary.

- The 1st monitor
  While the engine is running and the purge VSV is ON (open), the ECM monitors the purge flow by measuring the EVAP pressure change. If negative pressure is not created, the ECM begins the 2nd monitor.
- The 2nd monitor
  The vent valve is turned ON (closed) and the EVAP pressure is then measured. If the variation in the pressure is less than 0.5 kPa-g (3.75 mmHg-g), the ECM interprets this as the purge VSV being stuck closed, and illuminates the MIL and sets DTC P0441 (2 trip detection logic).

Atmospheric pressure check:
In order to ensure reliable malfunction detection, the variation between the atmospheric pressures, before and after conduction of the purge flow monitor, is measured by the ECM.

OBD II MONITOR SPECIFICATIONS

1. Key-off Monitor

Monitor Strategy

Required Sensors/Components	Purge VSV and canister pump module
Frequency of Operation	Once per driving cycle
Duration	Within 15 minutes (varies with fuel in tank)
MIL Operation	2 driving cycles
Sequence of Operation	None

Typical Enabling Conditions

EVAP key-off monitor runs when all of following conditions met	-
Atmospheric pressure	70 to 110 kPa-a (525 to 825 mmHg-a)
Battery voltage	10.5 V or more
Vehicle speed	Below 2.5 mph (4 km/h)
Ignition switch	OFF
Time after key off	5 or 7 or 9.5 hours
Canister pressure sensor malfunction (P0450, P0451, P0452 and P0453)	Not detected
Purge VSV	Not operated by scan tool
Vent valve	Not operated by scan tool
Leak detection pump	Not operated by scan tool
Both of following conditions met before key off	Conditions 1 and 2
1. Duration that vehicle driven	5 minutes or more
2. EVAP purge operation	Performed
ECT	4.4° to 35°C (40° to 95°F)
IAT	4.4°to 35°C (40° to 95°F)

2. Key-off monitor sequence 1 to 8

1. Atmospheric pressure measurement

Next sequence run if following condition set	-
Atmospheric pressure change	Less than 0.3 kPa-g (2.25 mmHg-g) in 1 second

2. First reference pressure measurement

Next sequence run if all of following conditions set	Condition 1, 2 and 3
1. EVAP pressure just after reference pressure measurement start	-1 kPa-g (-7.5 mmHg-g) or less
2. Reference pressure	-4.85 to -1.057 kPa-g (-36.4 to -7.93 mmHg-g)
3. Reference pressure	Saturated within 60 seconds

3. Vent valve stuck closed check

Next sequence run if following condition set	-
EVAP pressure change after vent valve ON (closed)	0.3 kPa-g (2.25 mmHg-g) or more

4. Vacuum introduction

Next sequence run if following condition set	-
EVAP pressure	Saturated within 15 minutes

5. Purge VSV stuck closed check

Next sequence run if following condition set	-
EVAP pressure change after purge VSV ON (open)	0.3 kPa-g (2.25 mmHg-g) or more

6. Second reference pressure measurement

Next sequence run if all of following conditions set	Condition 1, 2, 3 and 4
1. EVAP pressure just after reference pressure	-1 kPa-g (-7.5 mmHg-g) or less
2. Reference pressure	-4.85 to -1.057 kPa-g (-36.4 to -7.93 mmHg-g)
3. Reference pressure	Saturated within 60 seconds
4. Reference pressure difference between first and second	Less than 0.7 kPa-g (5.25 mmHg-g)

7. Leak check

Next sequence run if following condition set	-
EVAP pressure when vacuum introduction complete	Second reference pressure or less

8. Atmospheric pressure measurement

EVAP monitor complete if following condition set	-
Atmospheric pressure difference between sequence 1 and 8	Within 0.3 kPa-g (2.25 mmHg-g)

Typical Malfunction Thresholds

Purge VSV stuck open:	-
EVAP pressure when vacuum introduction complete	Higher than reference pressure x 0.2

Purge VSV stuck closed:	-
EVAP pressure change after purge VSV ON (open)	Less than 0.3 kPa-g (2.25 mmHg-g)

OBD II MONITOR SPECIFICATIONS

1. Purge Flow Monitor

Monitor Strategy

Required Sensors/Components	Purge VSV and canister pump module
Frequency of Operation	Once per driving cycle
Duration	Within 10 minutes
MIL Operation	2 driving cycles
Sequence of Operation	None

Typical Enabling Conditions

Monitor runs whenever following DTCs not present	P0011 (VVT System 1 - Advance) P0012 (VVT System 1 - Retard) P0021 (VVT System 2 - Advance) P0022 (VVT System 2 - Retard) P0100 - P0103 (MAF meter) P0110 - P0113 (IAT sensor) P0115 - P0118 (ECT sensor) P0120 - P0223, P2135 (TP sensor) P0125 (Insufficient ECT for Closed Loop) P0171, P0172, P0174, P0175 (Fuel system) P0300 - P0306 (Misfire) P0335 (CKP sensor) P0340 (CMP sensor) P0351 - P0356 (Igniter) P0450 - P0453 (EVAP press sensor) P0500 (VSS)
Engine	Running

ECT	4.4°C (40°F) or more
IAT	4.4°C (40°F) or more
Canister pressure sensor malfunction	Not detected
Purge VSV	Not operated by scan tool
EVAP system check	Not operated by scan tool
Battery voltage	10 V or more
Purge duty cycle	8 % or more

Typical Malfunction Thresholds

Both of following conditions met	Conditions 1 and 2
1. EVAP pressure change when purge operation started	Less than 0.1 kPa-g (0.75 mmHg-g)
2. EVAP pressure change during purge operation when vent valve closed	Less than 0.5 kPa-g (3.75 mmHg-g)

MONITOR RESULT

Refer to CHECKING MONITOR STATUS (See page ES-20).

DTC	P0450	Evaporative Emission Control System Pressure Sensor / Switch

DTC	P0451	Evaporative Emission Control System Pressure Sensor Range / Performance

DTC	P0452	Evaporative Emission Control System Pressure Sensor / Switch Low Input

DTC	P0453	Evaporative Emission Control System Pressure Sensor / Switch High Input

DTC SUMMARY

DTC	Monitoring Items	Malfunction Detection Conditions	Trouble Areas	Detection Timings	Detection Logic
P0450	Canister pressure sensor voltage fluctuation abnormal	Sensor output voltage rapidly fluctuates beyond upper and lower malfunction thresholds for 0.5 seconds.	• Canister pump module • EVAP system hose (pipe from air inlet port to canister pump module, canister filter, fuel tank vent hose) • ECM	• EVAP monitoring (ignition OFF) • Ignition ON	1 trip
P0451	Canister pressure sensor noise	Sensor output voltage fluctuates frequently within certain time period.	• Canister pump module • Connector/wire harness (Canister pump module - ECM) • EVAP system hose (pipe from air inlet port to canister pump module, canister filter, fuel tank vent hose) • ECM	• EVAP monitoring (ignition OFF) • Engine running	2 trip
	Canister pressure sensor signal becomes fixed/flat	Sensor output voltage does not vary within certain time period.	• Canister pump module • Connector/wire harness (Canister pump module - ECM) • EVAP system hose (pipe from air inlet port to canister pump module, canister filter, fuel tank vent hose) • ECM	• EVAP monitoring (ignition OFF)	2 trip
P0452	Canister pressure sensor voltage low	Sensor output voltage less than 0.45 V for 0.5 seconds.	• Canister pump module • Connector/wire harness (Canister pump module - ECM) • EVAP system hose (pipe from air inlet port to canister pump module, canister filter, fuel tank vent hose) • ECM	• Ignition ON • EVAP monitoring (ignition OFF)	1 trip

DTC	Monitoring Items	Malfunction Detection Conditions	Trouble Areas	Detection Timings	Detection Logic
P0453	Canister pressure sensor voltage high	Sensor output voltage more than 4.9 V for 0.5 seconds.	• Canister pump module • Connector/wire harness (Canister pump module - ECM) • EVAP system hose (pipe from air inlet port to canister pump module, canister filter, fuel tank vent hose) • ECM	• Ignition ON • EVAP monitoring (ignition OFF)	1 trip

HINT:

The canister pressure sensor is built into the canister pump module.

ES

DESCRIPTION

The description can be found in the EVAP (Evaporative Emission) System (See page ES-352).

MONITOR DESCRIPTION

Canister Pressure Sensor Specification:

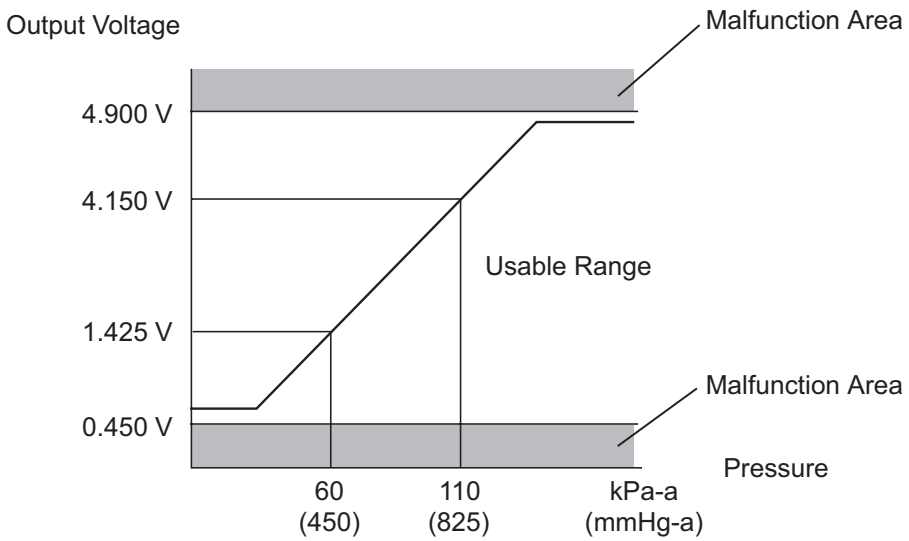

HINT:

Standard atmospheric pressure is 101.3 kPa-a (760 mmHg-a)

A115543E05

1. DTC P0450: Canister pressure sensor voltage abnormal fluctuation
   If the canister pressure sensor voltage output [pressure] rapidly fluctuates between less than 0.45 V [42.1 kPa-a (315.9 mmHg-a)] and more than 4.9 V [123.8 kPa-a (928.4 mmHg-a)], the ECM interprets this as an open or short circuit malfunction in the canister pressure sensor or its circuit, and stops the EVAP (Evaporative Emission) system monitor. The ECM then illuminates the MIL and sets the DTC (1 trip detection logic).

2. DTC P0451: Canister pressure sensor noise or fixed/flat
   If the canister pressure sensor voltage output fluctuates rapidly for 10 seconds, the ECM stops the EVAP system monitor. The ECM interprets this as noise from the canister pressure sensor, and stops the EVAP system monitor. The ECM then illuminates the MIL and sets the DTC.
   Alternatively, if the sensor voltage output does not change for 10 seconds, the ECM interprets this as the sensor being fixed/flat, and stops the monitor. The ECM then illuminates the MIL and sets the DTC. (Both the malfunctions are detected by 2 trip detection logic).
3. DTC P0452: Canister pressure sensor voltage low
   If the canister pressure sensor voltage output [pressure] is below 0.45 V [42.1 kPa-a (315.9 mmHg-a)], the ECM interprets this as an open or short circuit malfunction in the canister pressure sensor or its circuit, and stops the EVAP system monitor. The ECM then illuminates the MIL and sets the DTC (1 trip detection logic).
4. DTC P0453: Canister pressure sensor voltage high
   If the canister pressure sensor voltage output [pressure] is 4.9 V [123.8 kPa-a (928.4 mmHg-a)] or more, the ECM interprets this as an open or short circuit malfunction in the canister pressure sensor or its circuit, and stops the EVAP system monitor. The ECM then illuminates the MIL and sets the DTC (1 trip detection logic).

MONITOR STRATEGY

Required Sensors/Components	Canister pump module
Frequency of Operation	Once per driving cycle: P0451 sensor fixed/flat Continuous: P0451 sensor noise, P0450, P0452 and P0453
Duration	0.5 seconds: P0450, P0452 and P0453 Within 15 seconds: P0451
MIL Operation	Immediate: P0450, P0452 and P0453 2 driving cycles: P0451
Sequence of Operation	None

TYPICAL ENABLING CONDITIONS

P0451 (Noise monitor):

Monitor runs whenever following DTCs not present	None
Atmospheric pressure (absolute pressure)	70 to 110 kPa-a (525 to 825 mmHg-a)
Battery voltage	10.5 V or more
Intake air temperature	4.4°to 35°C (40° to 95°F)
Canister pressure sensor malfunction (P0450, P0452, 0453)	Not detected
Either of following conditions met	A or B
A. Engine condition	Running
B. Time after key off	5 or 7 or 9.5 hours

P0451 (Fixed/flat monitor):

Monitor runs whenever following DTCs not present	None
Battery voltage	10.5 V or more
Intake air temperature	4.4°to 35°C (40° to 95°F)
Canister pressure sensor malfunction (P0450, P0452, 0453)	Not detected
Atmospheric pressure (absolute pressure)	70 to 110 kPa-a (525 to 825 mmHg-a)
Time after key off	5 or 7 or 9.5 hours

P0450, P0452 and P0453:

Monitor runs whenever following DTCs not present	None
Either of following conditions met	(a) or (b)
(a) Ignition switch	ON
(b) Soak timer	ON

TYPICAL MALFUNCTION THRESHOLDS

P0450: Canister pressure sensor chattering

EVAP pressure	Less than 42.1 kPa-a (315.9 mmHg-a), or more than 123.8 kPa-a (928.4 mmHg-a)

P0451: Canister pressure sensor noise

Frequency that EVAP pressure change 0.3 kPa-g (2.25 mmHg-g) or more	10 times or more in 10 seconds

P0451: Canister pressure sensor fixed/flat

EVAP pressure change during reference pressure	Less than 0.65 kPa-g (4.87 mmHg-g)

P0452: Canister pressure sensor low voltage

EVAP pressure	Less than 42.1 kPa-a (315.9 mmHg-a)

P0453: Canister pressure sensor high voltage

EVAP pressure	More than 123.8 kPa-a (928.4 mmHg-a)

WIRING DIAGRAM

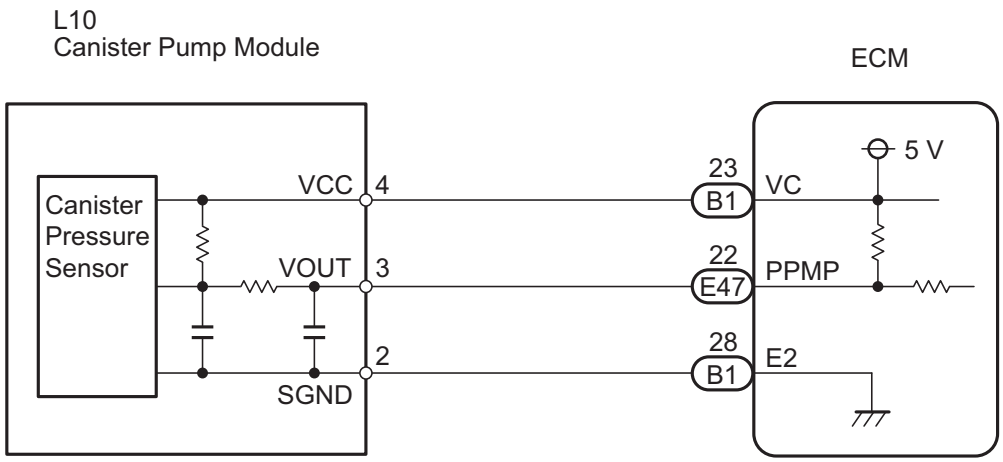

Y

A133419E01

INSPECTION PROCEDURE

NOTICE:

- **When a vehicle is brought into the workshop, leave it as it is. Do not change the vehicle condition. For example, do not tighten the fuel cap.**
- **Do not disassemble the canister pump module.**
- **An intelligent tester is required to conduct the following diagnostic troubleshooting procedure.**

1	**CONFIRM DTC AND EVAP PRESSURE**

(a) Connect an intelligent tester to the DLC3.
(b) Turn the ignition switch ON (do not start the engine).

(c) Turn the tester ON.
(d) Select the following menu items: DIAGNOSIS / ENHANCED OBD II / DTC INFO / CURRENT CODES.
(e) Read DTCs.
(f) Select the following menu items: DIAGNOSIS / ENHANCED OBD II / DATA LIST / EVAP / VAPOR PRESS.
(g) Read the EVAP (Evaporative Emission) pressure displayed on the tester.

Result

Display (DTC Output)	Test Results	Suspected Trouble Areas	Proceed To
P0451	-	Canister pressure sensor	C
P0452	Less than 45 kPa-a (430 mmHg-a)	• Wire harness/connector (ECM - Canister pressure sensor) • Canister pressure sensor • Short in ECM circuit	A
P0453	More than 120 kPa-a (900 mmHg-a)	• Wire harness/connector (ECM - Canister pressure sensor) • Canister pressure sensor • Open in ECM circuit	B

ES

B → Go to step 4

C → GO TO EVAP SYSTEM (See page ES-350)

A

2 CHECK HARNESS AND CONNECTOR (CANISTER PUMP MODULE - ECM)

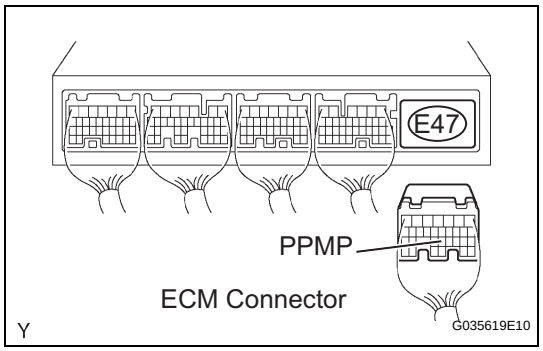

(a) Turn the ignition switch OFF.
(b) Disconnect the E47 ECM connector.
(c) Check the resistance between PPMP terminal of the ECM connector and the body ground.

Result

Test Results	Suspected Trouble Areas	Proceed To
10 Ω or less	• Wire harness/connector (ECM - Canister pressure sensor) • Short in canister pressure sensor circuit	A
10 kΩ or more	• Wire harness/connector (ECM - Canister pressure sensor) • Short in ECM circuit	B

(d) Reconnect the ECM connector.

B → Go to step 7

A

3	CHECK HARNESS AND CONNECTOR (CANISTER PUMP MODULE - ECM)

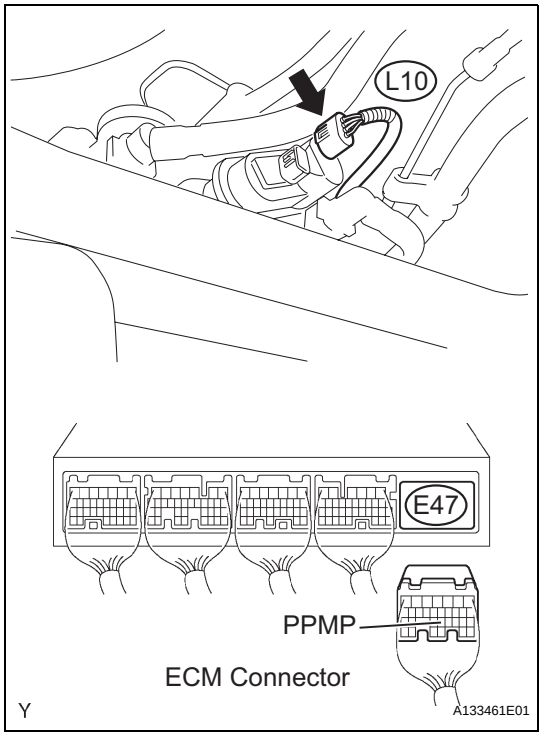

(a) Disconnect the L10 canister pump module connector.
(b) Disconnect the E47 ECM connector.
(c) Check the resistance between PPMP terminal of the ECM connector and the body ground.

Result

Test Results	Suspected Trouble Areas	Proceed To
10 kΩ or more	**Short in canister pressure sensor circuit**	**A**
10 Ω or less	**Short in wire harness/connector (ECM - Canister pressure sensor)**	**B**

(d) Reconnect the canister pump module connector.
(e) Reconnect the ECM connector.

A	**Go to step 5**
B	**Go to step 6**

4 CHECK HARNESS AND CONNECTOR (CANISTER PUMP MODULE - ECM)

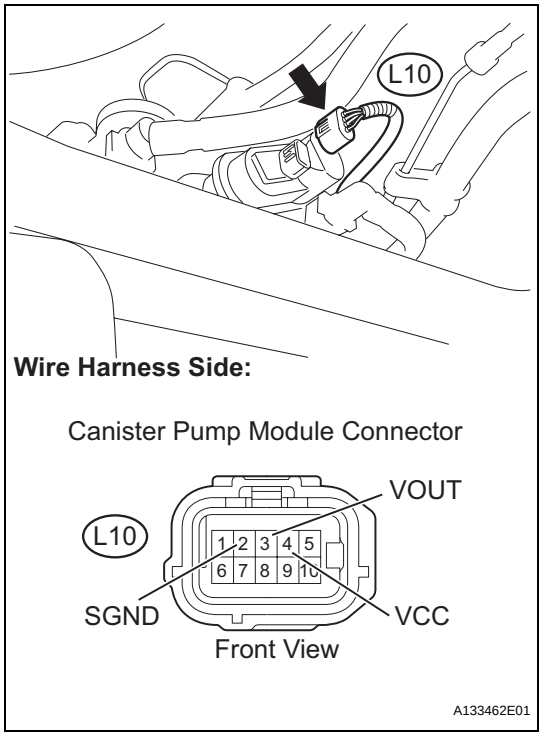

(a) Disconnect the L10 canister pump module connector.
(b) Turn the ignition switch ON.
(c) Measure the voltage and resistance of the canister pump module connector.

Standard

Tester Connections	Specified Conditions
VCC (L10-4) - Body ground	4.5 to 5.5 V
VOUT (L10-3) - Body ground	4.5 to 5.5 V
SGND (L10-2) - Body ground	100 Ω or less

ES

Result

Test Results	Suspected Trouble Areas	Proceed To
Voltage and resistance within standard ranges	Open in canister pressure sensor circuit	A
Voltage and resistance outside standard ranges	Open in wire harness/connector (ECM - Canister pressure sensor)	B

(d) Reconnect the canister pump module connector.

A	Go to step 5
B	Go to step 6

5 REPLACE CHARCOAL CANISTER ASSEMBLY

(a) Replace the canister assembly (See page EC-9).
NOTICE:
When replacing the canister, check the canister pump module interior and related pipes for water, fuel and other liquids. If liquids are present, check for disconnections and/or cracks in the following: 1) the pipe from the air inlet port to the canister pump module; 2) the canister filter; and 3) the fuel tank vent hose.

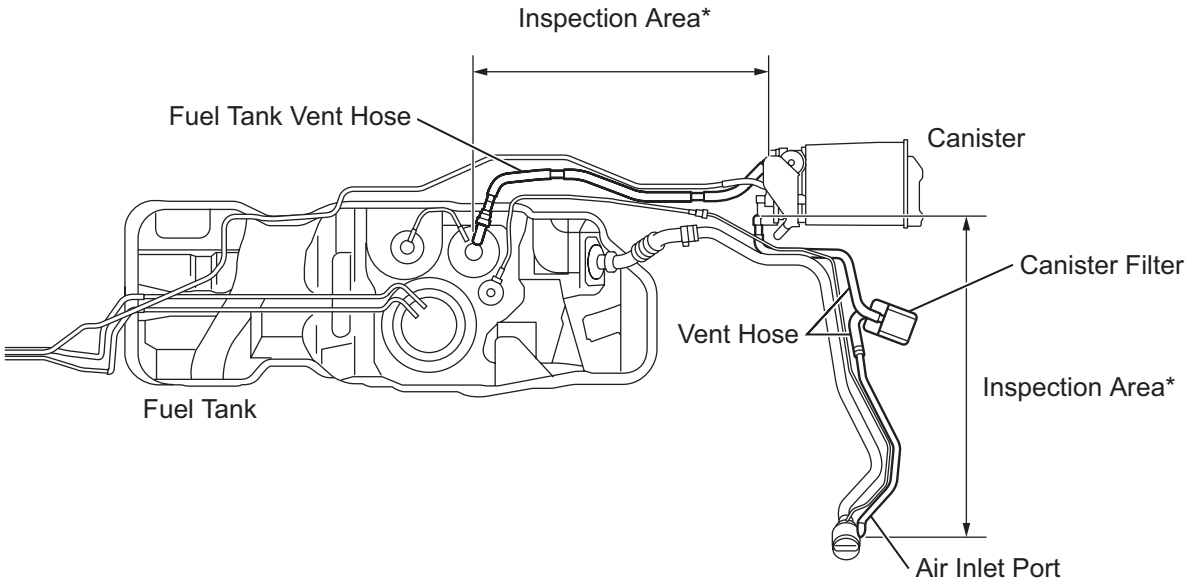

*: Check for disconnection and/or cracks

Y

A112652E01

NEXT → Go to step 8

6	REPAIR OR REPLACE HARNESS OR CONNECTOR

HINT:
If the exhaust tail pipe has been removed, go to the next step before reinstalling it.

NEXT → Go to step 8

7	REPLACE ECM

(a) Replace the ECM (See page ES-446).

NEXT → Go to step 8

8	CHECK WHETHER DTC OUTPUT RECURS (AFTER REPAIR)

(a) Connect the intelligent tester to the DLC3.
(b) Turn the ignition switch ON and turn the tester ON.
(c) Wait for at least 60 seconds.
(d) On the tester, select the following menu items: DIAGNOSIS / ENHANCED OBD II / DTC INFO / PENDING CODES.

HINT:
If no pending DTCs are displayed on the tester, the repair has been successfully completed.

NEXT

COMPLETED

DTC	P0455	Evaporative Emission Control System Leak Detected (Gross Leak)

DTC	P0456	Evaporative Emission Control System Leak Detected (Very Small Leak)

DTC SUMMARY

DTCs	Monitoring Items	Malfunction Detection Conditions	Trouble Areas	Detection Timings	Detection Logic
P0455	EVAP gross leak	Leak detection pump creates negative pressure (vacuum) in EVAP system and EVAP system pressure measured. Reference pressure measured at start and at end of leak check. If stabilized pressure higher than [second reference pressure x 0.2], ECM determines that EVAP system has large leak.	• Fuel cap (loose) • Leakage from EVAP line (Canister - Fuel tank) • Leakage from EVAP line (Purge VSV - Canister) • Canister pump module • Leakage from fuel tank • Leakage from canister	While ignition switch OFF	2 trip
P0456	EVAP small leak	Leak detection pump creates negative pressure (vacuum) in EVAP system and EVAP system pressure measured. Reference pressure measured at start and at end of leak check. If stabilized pressure higher than second reference pressure, ECM determines that EVAP system has small leak.	• Fuel cap (loose) • Leakage from EVAP line (Canister - Fuel tank) • Leakage from EVAP line (Purge VSV - Canister) • Canister pump module • Leakage from fuel tank • Leakage from canister	While ignition switch OFF	2 trip

DESCRIPTION

The description can be found in the EVAP (Evaporative Emission) System (See page ES-352).

INSPECTION PROCEDURE

Refer to the EVAP System (See page ES-357).

MONITOR DESCRIPTION

5 hours* after the ignition switch is turned to OFF, the leak detection pump creates negative pressure (vacuum) in the EVAP system. The ECM monitors for leaks and actuator malfunctions based on the EVAP pressure.

HINT:

*: If the engine coolant temperature is not below 35°C (95°F) 5 hours after the ignition switch is turned to OFF, the monitor check starts 2 hours later. If it is still not below 35°C (95°F) 7 hours after the ignition switch is turned to OFF, the monitor check starts 2.5 hours later.

Sequence	Operations	Descriptions	Duration
-	ECM activation	Activated by soak timer, 5 hours (7 or 9.5 hours) after ignition switch turned to OFF.	-
A	Atmospheric pressure measurement	Vent valve turned OFF (vent) and EVAP system pressure measured by ECM in order to register atmospheric pressure. If pressure in EVAP system not between 70 kPa-a and 110 kPa-a (525 mmHg-a and 825 mmHg-a), ECM cancels EVAP system monitor.	10 seconds
B	First reference pressure measurement	In order to determine reference pressure, leak detection pump creates negative pressure (vacuum) through reference orifice and then ECM checks if leak detection pump and vent valve operate normally.	60 seconds

Sequence	Operations	Descriptions	Duration
C	EVAP system pressure measurement	Vent valve turned ON (closed) to shut EVAP system. Negative pressure (vacuum) created in EVAP system, and EVAP system pressure then measured. Write down measured value as will be used in leak check. If EVAP pressure does not stabilize within 15 minutes, ECM cancels EVAP system monitor.	15 minutes*
D	Purge VSV monitor	Purge VSV opened and then EVAP system pressure measured by ECM. Large increase indicates normality.	10 seconds
E	Second reference pressure measurement	After second reference pressure measurement, leak check performed by comparing first and second reference pressure. If stabilized system pressure higher than second reference pressure, ECM determines that EVAP system leaking.	60 seconds
F	Final check	Atmospheric pressure measured and then monitoring result recorded by ECM.	-

* If only a small amount of fuel is in the fuel tank, it takes longer for the EVAP pressure to stabilize.

ES

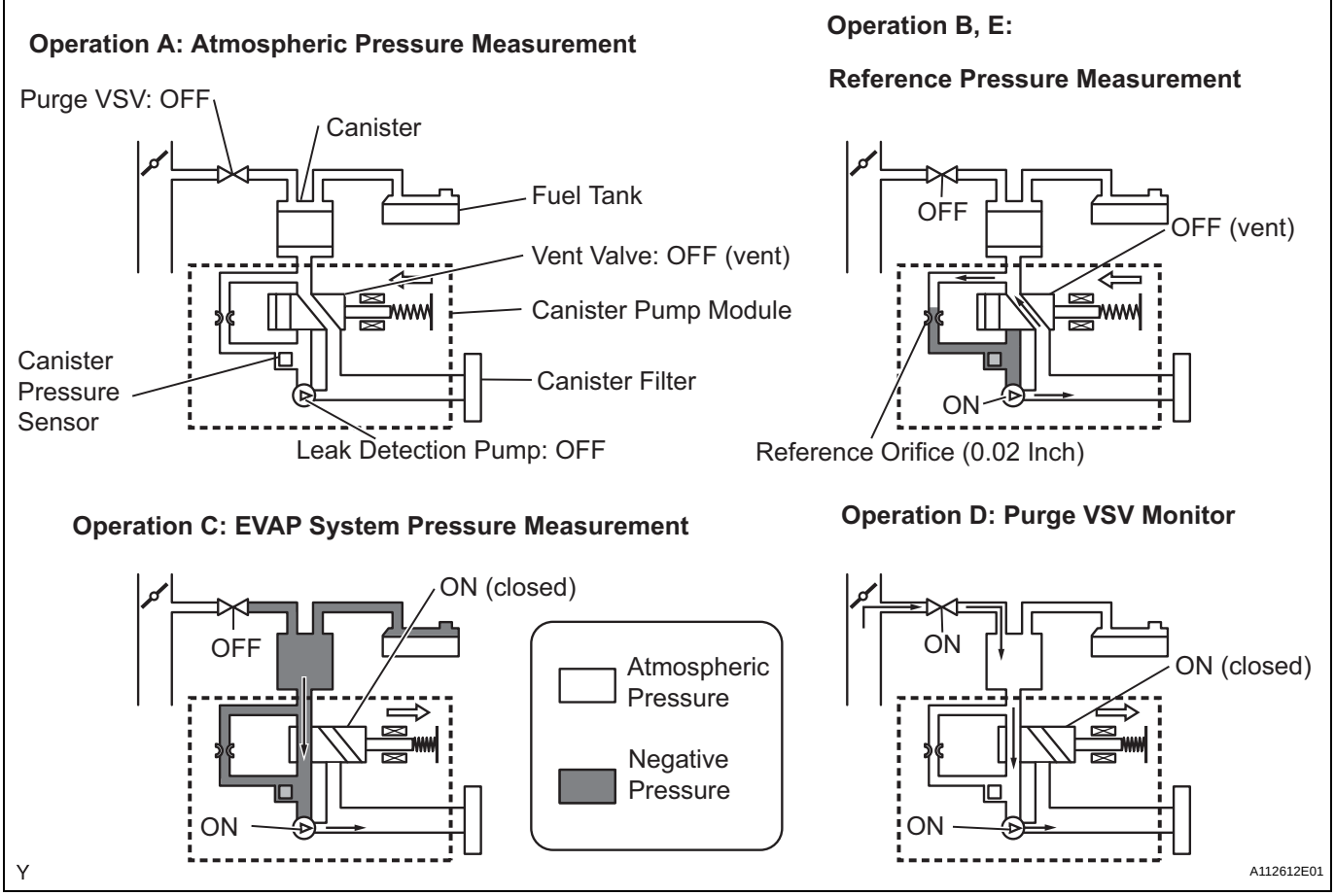

(a) P0455: EVAP gross leak

In operation C, the leak detection pump creates negative pressure (vacuum) in the EVAP system and the EVAP system pressure is measured. If the stabilized system pressure is higher than [second reference pressure x 0.2] (near atmospheric pressure), the ECM determines that the EVAP system has a large leakage, illuminates the MIL and sets the DTC (2 trip detection logic).

(b) P0456: EVAP very small leak
In operation C, the leak detection pump creates negative pressure (vacuum) in the EVAP system and the EVAP system pressure is measured. If the stabilized system pressure is higher than the second reference pressure, the ECM determines that the EVAP system has a small leakage, illuminates the MIL and sets the DTC (2 trip detection logic).

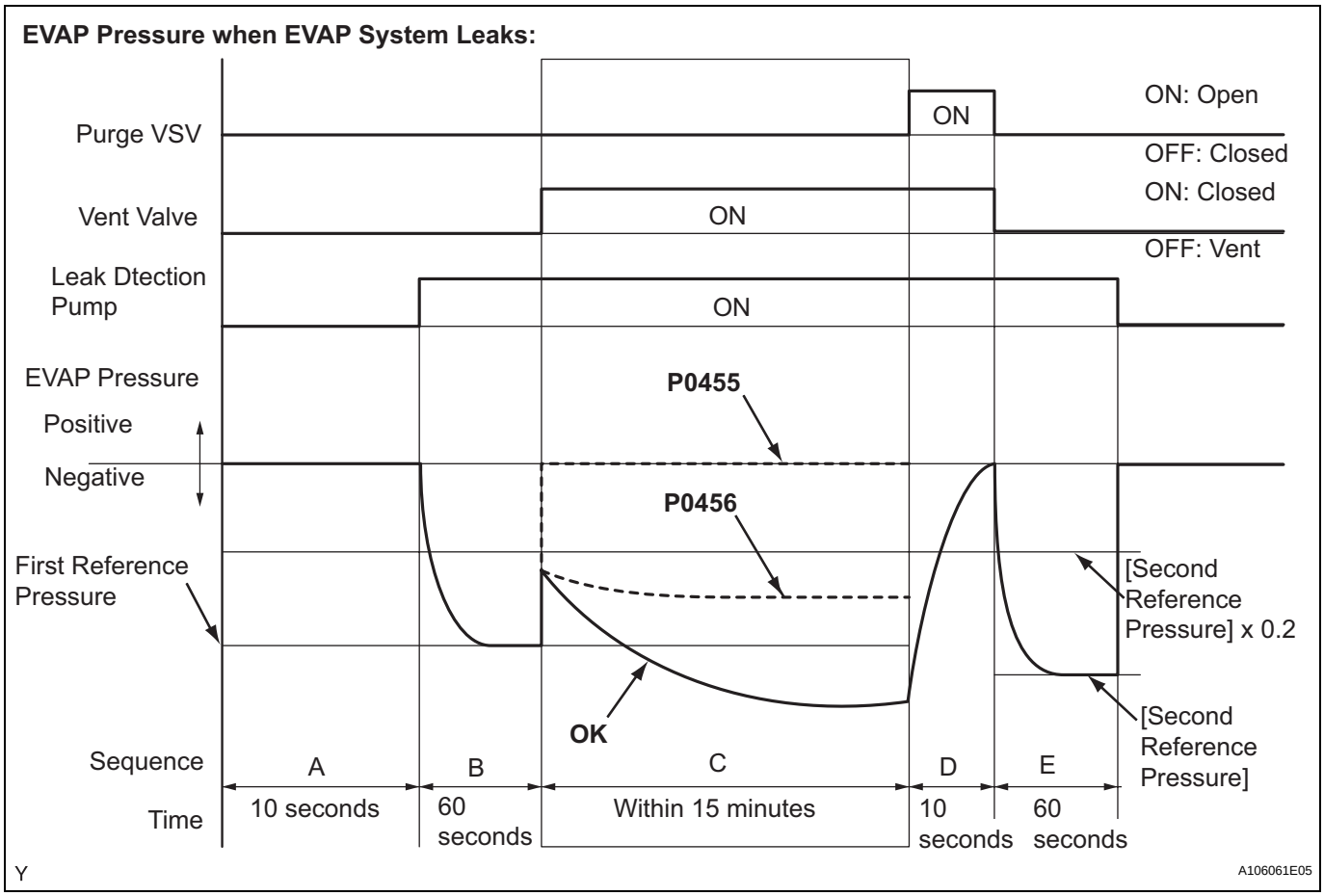

MONITOR STRATEGY

Required Sensors/Components	Purge VSV and canister pump module
Frequency of Operation	Once per driving cycle
Duration	Within 15 minutes (varies with amount of fuel in tank)
MIL Operation	2 driving cycles
Sequence of Operation	None

TYPICAL ENABLING CONDITIONS

Monitor runs whenever following DTCs not present	None
EVAP key-off monitor runs when all of following conditions met	-
Atmospheric pressure	70 to 110 kPa-a (525 to 825 mmHg-a)
Battery voltage	10.5 V or more
Vehicle speed	Below 2.5 mph (4 km/h)
Ignition switch	OFF
Time after key off	5 or 7 or 9.5 hours
Canister pressure sensor malfunction (P0450, P0451, P0452 and P0453)	Not detected
Purge VSV	Not operated by scan tool
Vent valve	Not operated by scan tool

Leak detection pump	Not operated by scan tool
Both of following conditions met before key off	Conditions 1 and 2
1. Duration that vehicle driven	5 minutes or more
2. EVAP purge operation	Performed
ECT	4.4° to 35°C (40° to 95°F)
IAT	4.4°to 35°C (40° to 95°F)

1. Key-off monitor sequence 1 to 8

1. Atmospheric pressure measurement

Next sequence run if following condition set	-
Atmospheric pressure change	Less than 0.3 kPa-g (2.25 mmHg-g) in 1 second

2. First reference pressure measurement

Next sequence run if all of following conditions set	Condition 1, 2 and 3
1. EVAP pressure just after reference pressure measurement start	-1 kPa-g (-7.5 mmHg-g) or less
2. Reference pressure	-4.85 to -1.057 kPa-g (-36.4 to -7.93 mmHg-g)
3. Reference pressure	Saturated within 60 seconds

3. Vent valve stuck closed check

Next sequence run if following condition set	-
EVAP pressure change after vent valve ON (closed)	0.3 kPa-g (2.25 mmHg-g) or more

4. Vacuum introduction

Next sequence run if following condition set	-
EVAP pressure	Saturated within 15 minutes

5. Purge VSV stuck closed check

Next sequence run if following condition set	-
EVAP pressure change after purge VSV ON (open)	0.3 kPa-g (2.25 mmHg-g) or more

6. Second reference pressure measurement

Next sequence run if all of following conditions set	Condition 1, 2, 3 and 4
1. EVAP pressure just after reference pressure	-1 kPa-g (-7.5 mmHg-g) or less
2. Reference pressure	-4.85 to -1.057 kPa-g (-36.4 to -7.93 mmHg-g)
3. Reference pressure	Saturated within 60 seconds
4. Reference pressure difference between first and second	Less than 0.7 kPa-g (5.25 mmHg-g)

7. Leak check

Next sequence run if following condition set	-
EVAP pressure when vacuum introduction complete	Second reference pressure or less

8. Atmospheric pressure measurement

EVAP monitor complete if following condition set	-
Atmospheric pressure difference between sequence 1 and 8	Within 0.3 kPa-g (2.25 mmHg-g)

TYPICAL MALFUNCTION THRESHOLDS

P0455: EVAP gross leak

EVAP pressure when vacuum introduction complete	Higher than reference pressure x 0.2

P0456: EVAP small leak

EVAP pressure when vacuum introduction complete	Between reference pressure and reference pressure x 0.2

MONITOR RESULT

Refer to CHECKING MONITOR STATUS (See page ES-20).

DTC	P0500	Vehicle Speed Sensor "A"

DESCRIPTION

Automatic Transmission Models:

Vehicles, which are equipped with ABS (Anti-lock Brake System), detect the vehicle speed using the skid control ECU and wheel speed sensor. The wheel speed sensor monitors the wheel rotation speed and sends a signal to the skid control ECU. The skid control ECU converts the wheel speed signal into a 4-pulse signal and transmits it to the ECM via the combination meter. The ECM determines the vehicle speed based on the frequency of the pulse signal.

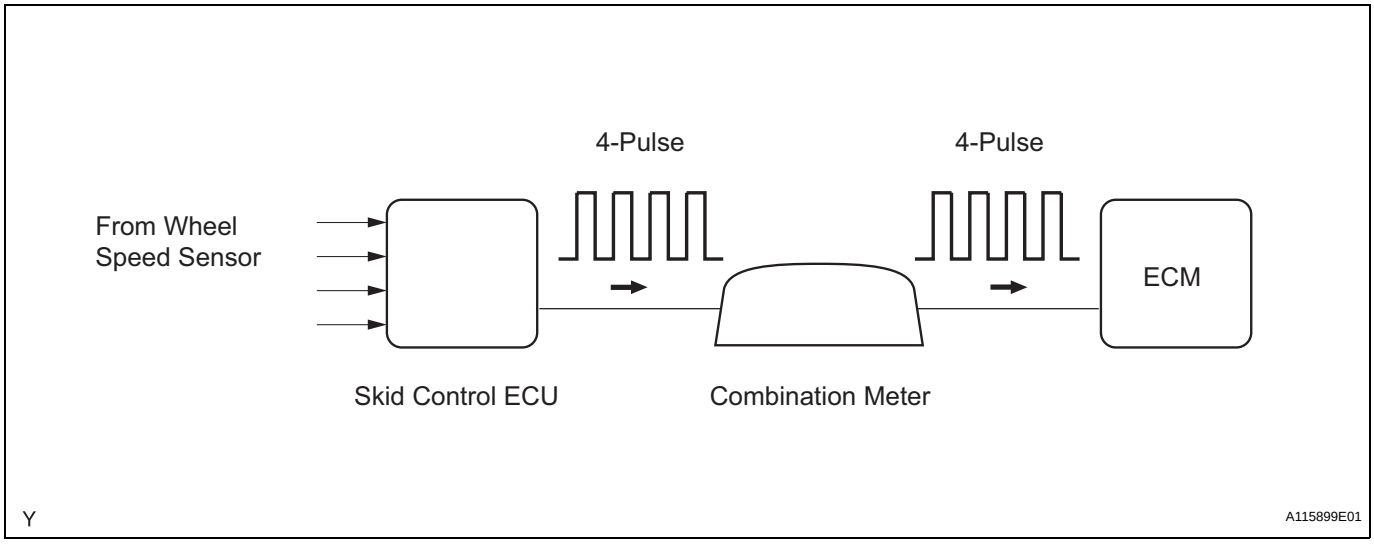

Manual Transmission Models:

Vehicles, which are equipped with manual transmission, detect the vehicle speed using the No. 1 vehicle speed sensor. The No. 1 vehicle speed sensor transmits a 4-pulse signal for every revolution of the rotor shaft, which is rotated by the transmission or transfer output shaft via the driven gear. The 4-pulse signal is converted into a more precise rectangular waveform by the waveform shaping circuit inside the combination meter. The signal is then transmitted to the ECM. The ECM determines the vehicle speed based on the frequency of the pulse signal.

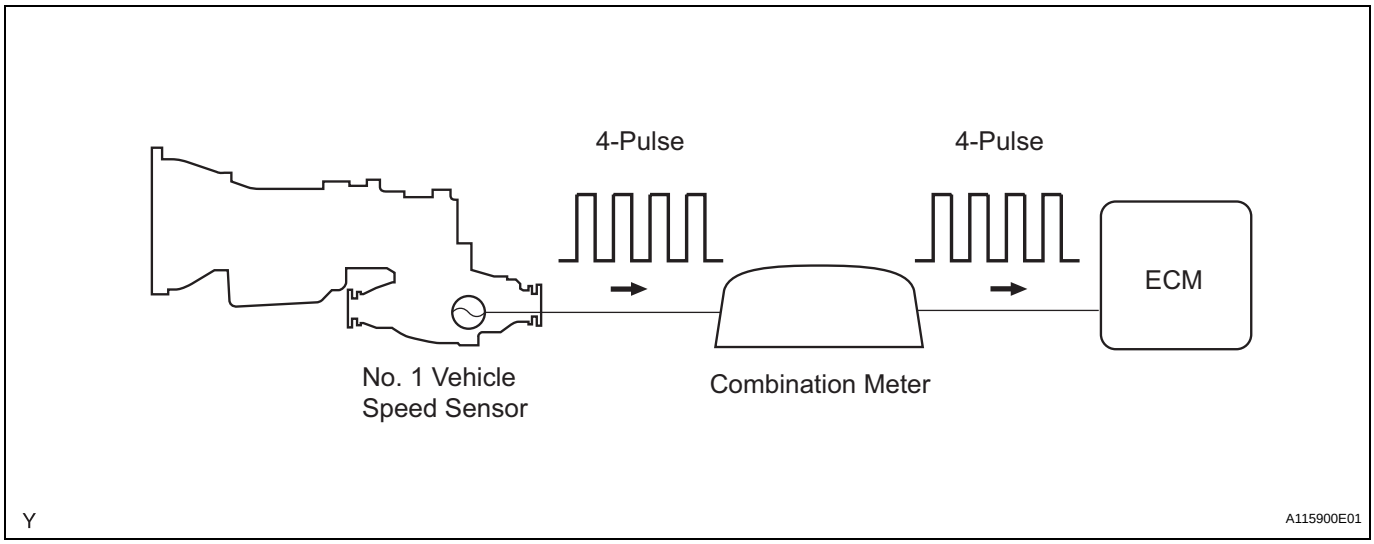

DTC No.	DTC Detection Conditions	Trouble Areas
P0500	Automatic Transmission Models: ECM detects following conditions simultaneously 500 times (1 trip detection logic) • No SP1 (speed sensor) signal while ECM detects SP2 (No. 2 speed sensor) signal • Vehicle speed 6 mph (9 km/h) or more for 4 seconds • Park/Neutral position switch OFF (shift lever other than P and N positions) • Transfer lever in other than N position (4WD)	• Open or short in speed signal circuit • Vehicle speed sensor • Combination meter • ECM • Skid control ECU
	Manual Transmission Models: Following conditions met for 5 seconds or more (2 trip detection logic): • Engine coolant temperature 70°C (158°F) or more • Engine speed 1,500 to 4,000 rpm • Fuel cut at high engine speed not executing • Engine load 31.6 % or more	

ES

MONITOR DESCRIPTION

Automatic Transmission Models:

The ECM assumes that the vehicle is being driven, while the vehicle speed sensor signal is being transmitted by the combination meter. If there is no signal from the combination meter, despite the ECM detecting the speed signal from the speed sensor No. 2, the ECM interprets this as a malfunction in the speed signal circuit. The ECM then illuminates the MIL and sets a DTC.

Manual Transmission Models:

The ECM assumes that the vehicle is being driven, when the indicated engine speed is more than 1,500 rpm and the engine load calculated by the ECM is more than certain level. If there is no signal from the vehicle speed sensor, despite these conditions being met, the ECM interprets this as a malfunction in the speed signal circuit. The ECM then illuminates the MIL and sets a DTC.

MONITOR STRATEGY

Related DTCs	P0500: Vehicle speed sensor "A" pulse input error
Required Sensors/Components (Main)	Vehicle Speed Sensor (VSS), Combination meter and Skid control ECU
Required Sensors/Components (Related)	Park/neutral Position (PNP) switch, Engine Coolant Temperature (ECT) sensor, Crankshaft Position (CKP) sensor and Mass Air Flow (MAF) meter
Frequency of Operation	Continuous
Duration	8 seconds: Manual transmission Conditions met 500 times: Automatic transmission
MIL Operation	2 driving cycles: Manual transmission Immediate: Automatic transmission
Sequence of Operation	None

TYPICAL ENABLING CONDITIONS

Monitor runs whenever following DTCs not present	None

Automatic Transmission:

Time after following conditions met:	4 seconds or more
Ignition switch	ON
Park/neutral position switch	OFF
Vehicle speed	5.59 mph (9 km/h) or more
Time after ignition switch OFF to ON	More than 0.5 seconds
Transfer neutral switch (only for 4WD)	Not N position

Manual Transmission:

Engine coolant temperature	70°C (158°F) or more

Engine speed	1,500 to 4,000 rpm
Fuel cut at high engine speed	Not executing
Engine load	31.6 % or more

TYPICAL MALFUNCTION THRESHOLDS

Vehicle speed sensor signal	No pulse input

WIRING DIAGRAM

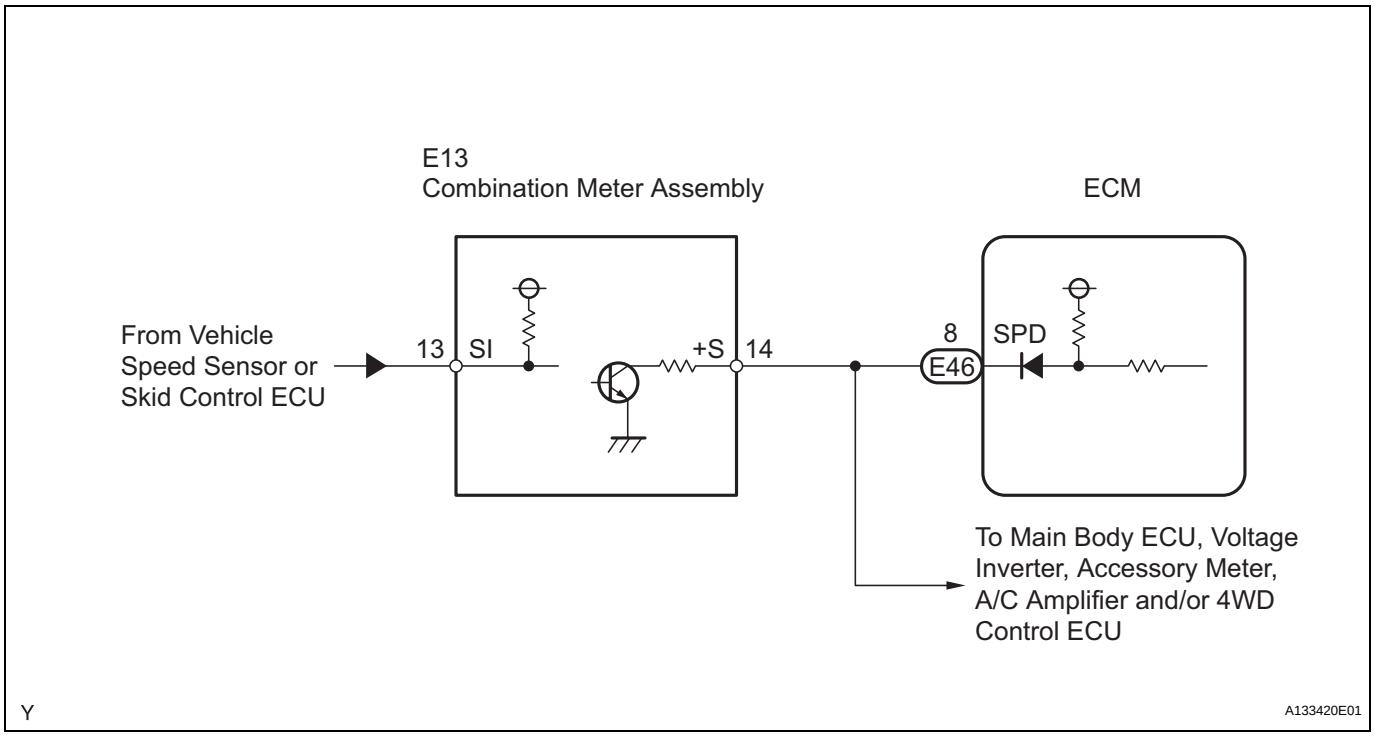

INSPECTION PROCEDURE

HINT:
Read freeze frame data using an intelligent tester. Freeze frame data record the engine condition when malfunctions are detected. When troubleshooting, freeze frame data can help determine if the vehicle was moving or stationary, if the engine was warmed up or not, if the air-fuel ratio was lean or rich, and other data, from the time the malfunction occurred.

1	**CHECK OPERATION OF SPEEDOMETER**

(a) Drive the vehicle and check if the operation of the speedometer in the combination meter is normal.
HINT:
- The vehicle speed sensor is operating normally if the speedometer reading is normal.
- If the speedometer does not operate, check it by following the procedure described in Speedometer Malfunction (See page ME-37).

NG → **GO TO MALFUNCTION IN SPEEDOMETER**

OK

2	INSPECT ECM (SPD VOLTAGE)

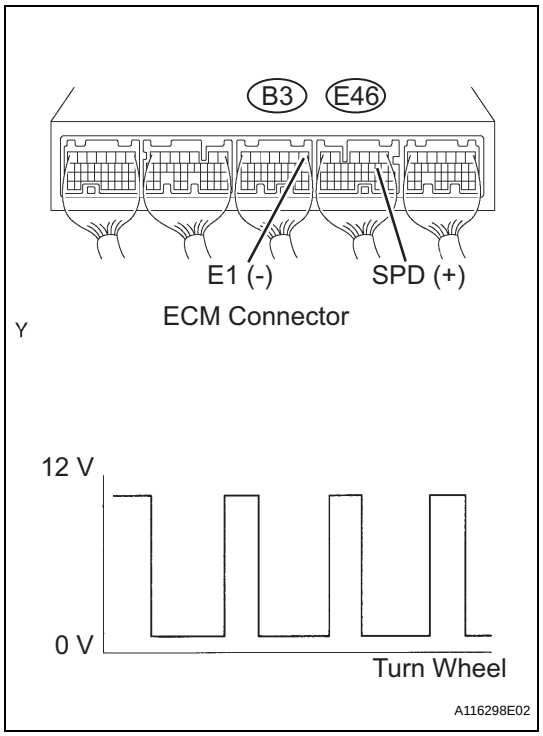

(a) Shift the transmission gear selector lever to the neutral position.
(b) Jack up the vehicle.
(c) Turn the ignition switch ON.
(d) Check the voltage between the terminals of the B3 and E46 ECM connectors as the wheel is turned slowly.

Standard

Tester Connections	Specified Conditions
SPD (E46-8) - E1 (B3-1)	Voltage generated intermittently

HINT:
The output voltage should fluctuate up and down similarly to the diagram on the left when the wheel is turned slowly.

NG → **REPAIR OR REPLACE HARNESS OR CONNECTOR**

ES

OK

REPLACE ECM (See page ES-446)

DTC	P0504	Brake Switch "A" / "B" Correlation

DESCRIPTION

The stop light switch is a duplex system that transmits two signals: STP and ST1-. These two signals are used by the ECM to monitor whether or not the brake system is working properly. If the signals, which indicate the brake pedal is being depressed and released, are detected simultaneously, the ECM interprets this as a malfunction in the stop light switch and sets the DTC.

HINT:

The normal conditions are as shown in the table below. The signals can be read using an intelligent tester.

Signals	Brake Pedal Released	In Transition	Brake Pedal Depressed
STP	OFF	ON	ON
ST1-	ON	ON	OFF

ES

DTC No.	DTC Detection Conditions	Trouble Areas
P0504	Conditions (a), (b) and (c) continue for 0.5 seconds or more (1 trip detection logic) (a) Ignition switch ON (b) Brake pedal released (c) STP signal OFF when ST1- signal OFF	• Short in stop light switch signal circuit • STOP fuse • Stop light switch • ECM

WIRING DIAGRAM

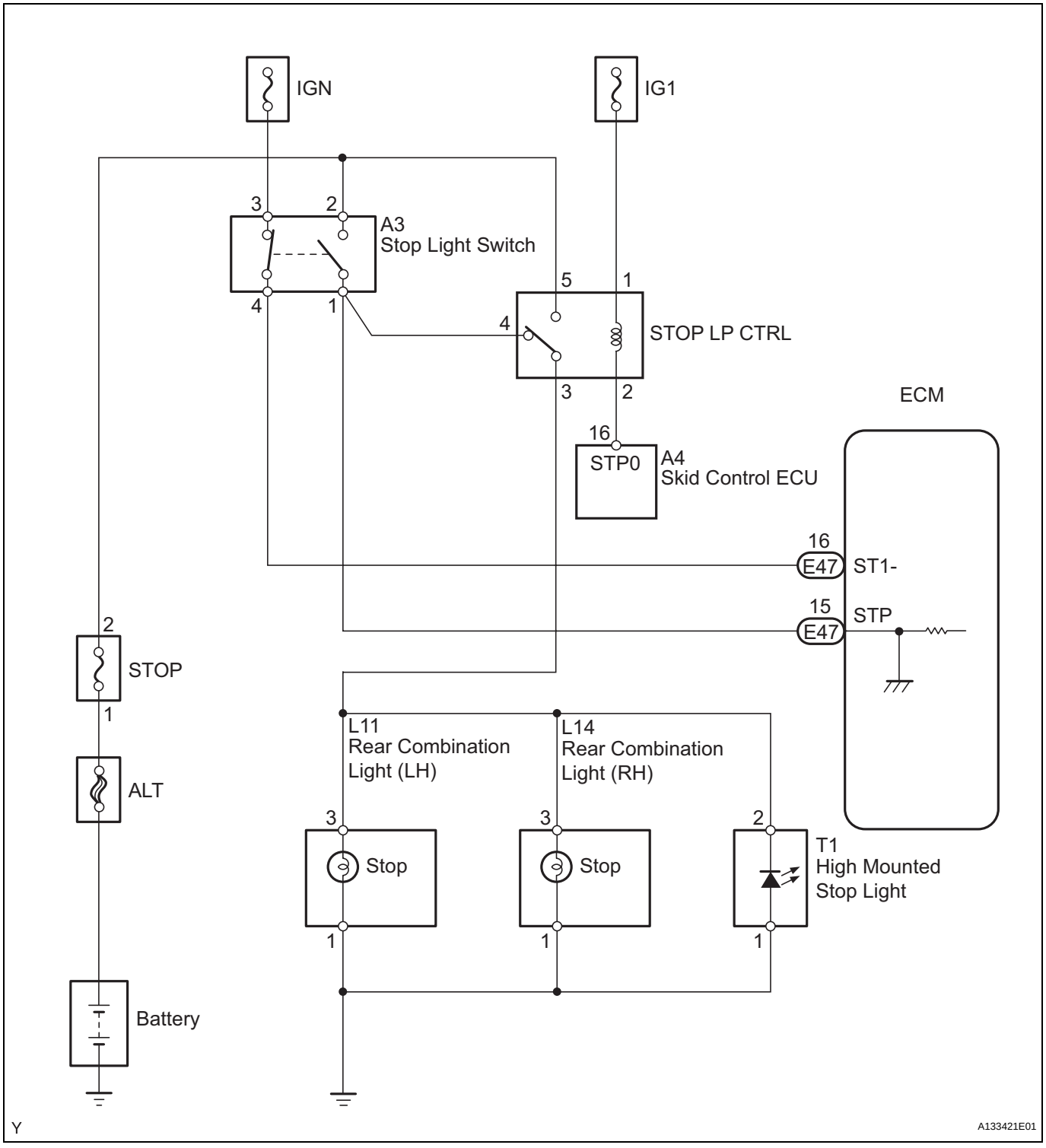

INSPECTION PROCEDURE

HINT:

Read freeze frame data using an intelligent tester. Freeze frame data record the engine condition when malfunctions are detected. When troubleshooting, freeze frame data can help determine if the vehicle was moving or stationary, if the engine was warmed up or not, if the air-fuel ratio was lean or rich, and other data, from the time the malfunction occurred.

1	CHECK OPERATION OF STOP LIGHT

(a) Check whether the stop lights turn on and off normally when the brake pedal is depressed and released.
OK:
Stop lights turn ON when brake pedal is depressed.

NG → **REPAIR OR REPLACE STOP LIGHT SWITCH CIRCUIT**

OK

ES

2	INSPECT STOP LIGHT SWITCH ASSEMBLY

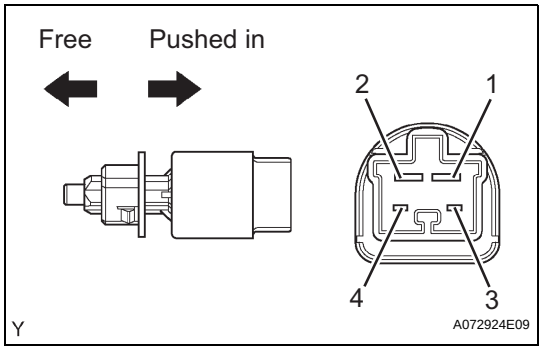

(a) Remove the stop light switch assembly.
(b) Check the resistance.
Standard Resistance

Switch Positions	Tester Connections	Specified Conditions
Switch pin free	1 - 2	Below 1 Ω
	3 - 4	10 kΩ or higher
Switch pin pushed in	1 - 2	10 kΩ or higher
	3 - 4	Below 1 Ω

(c) Reinstall the stop light switch assembly.

NG → **REPLACE STOP LIGHT SWITCH ASSEMBLY**

OK

3	READ VALUE USING INTELLIGENT TESTER (STP SIGNAL AND ST1- VOLTAGE)

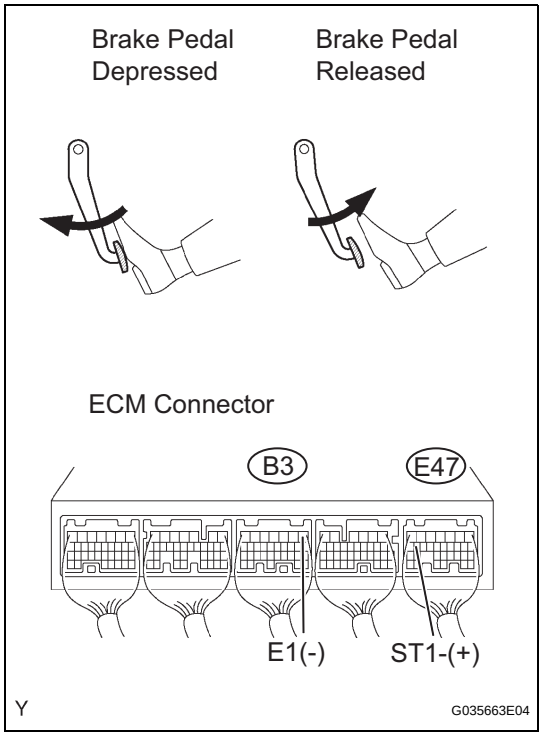

(a) Connect an intelligent tester to the DLC3.
(b) Turn the ignition switch ON and turn the tester ON.
(c) Select the following menu items: DIAGNOSIS / ENHANCED OBD II / DATA LIST / PRIMARY / STOP LIGHT SW.
(d) Check the STP signal when the brake pedal is depressed and released.
Standard

Brake Pedal Operations	Specified Conditions
Depressed	STP signal ON
Released	STP signal OFF

(e) Measure the voltage between the terminals of the B3 and E47 ECM connectors.
Standard Voltage

Tester Connections	Brake Pedal Operations	Specified Conditions
ST1- (E47-16) - E1 (B3-1)	Depressed	Below 1.5 V
	Released	7.5 to 14 V

OK → **CHECK FOR INTERMITTENT PROBLEMS**

NG

4	CHECK HARNESS AND CONNECTOR (STOP LIGHT SWITCH - ECM)

Wire Harness Side:

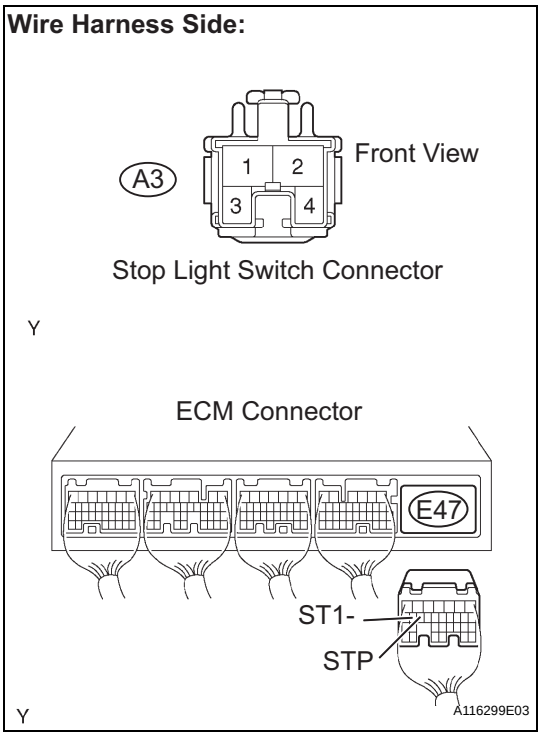

(a) Disconnect the A3 stop light switch connector.
(b) Disconnect the E47 ECM connector.
(c) Check the resistance.

Standard Resistance (Check for open)

Tester Connections	Specified Conditions
Stop light switch (A3-1) - STP (E47-15)	Below 1 Ω
Stop light switch (A3-4) - ST1- (E47-16)	

Standard Resistance (Check for short)

Tester Connections	Specified Conditions
Stop light switch (A3-1) or STP (E47-15) - Body ground	10 kΩ or higher
Stop light switch (A3-4) or ST1- (E47-16) - Body ground	

(d) Reconnect the stop light switch connector.
(e) Reconnect the ECM connector.

NG → **REPAIR OR REPLACE HARNESS OR CONNECTOR**

ES

OK

REPLACE ECM (See page ES-446)

DTC	P0505	Idle Control System Malfunction

DESCRIPTION

The idling speed is controlled by the ETCS (Electronic Throttle Control System). The ETCS is comprised of: 1) the one valve type throttle body; 2) the throttle actuator, which operates the throttle valve; 3) the Throttle Position (TP) sensor, which detects the opening angle of the throttle valve; 4) the Accelerator Pedal Position (APP) sensor, which detects the accelerator pedal position; and 5) the ECM, which controls the ETCS. Based on the target idling speed, the ECM controls the throttle actuator to provide the proper throttle valve opening angle.

DTC No.	DTC Detection Conditions	Trouble Areas
P0505	Idling speed continues to vary greatly from target idling speed (2 trip detection logic)	• ETCS • Air induction system • PCV hose connection • ECM

ES

MONITOR DESCRIPTION

The ECM monitors the idling speed and idling air flow volume to conduct Idle Speed Control (ISC). The ECM determines that the ISC system is malfunctioning if the following conditions apply:

- The learned idling air flow volume remains at the maximum or minimum volume 5 times or more during a drive cycle.
- While driving at 6.25 mph (10 km/h) or more, the actual engine idling speed varies from the target idling speed by between 100 rpm and 200 rpm, 5 times or more during a drive cycle.

Example:

If the actual idling speed varies from the target idling speed by more than 200 rpm* 5 times during a drive cycle, the ECM illuminates the MIL and sets the DTC.

*: Threshold idling speed varies with engine load.

Example

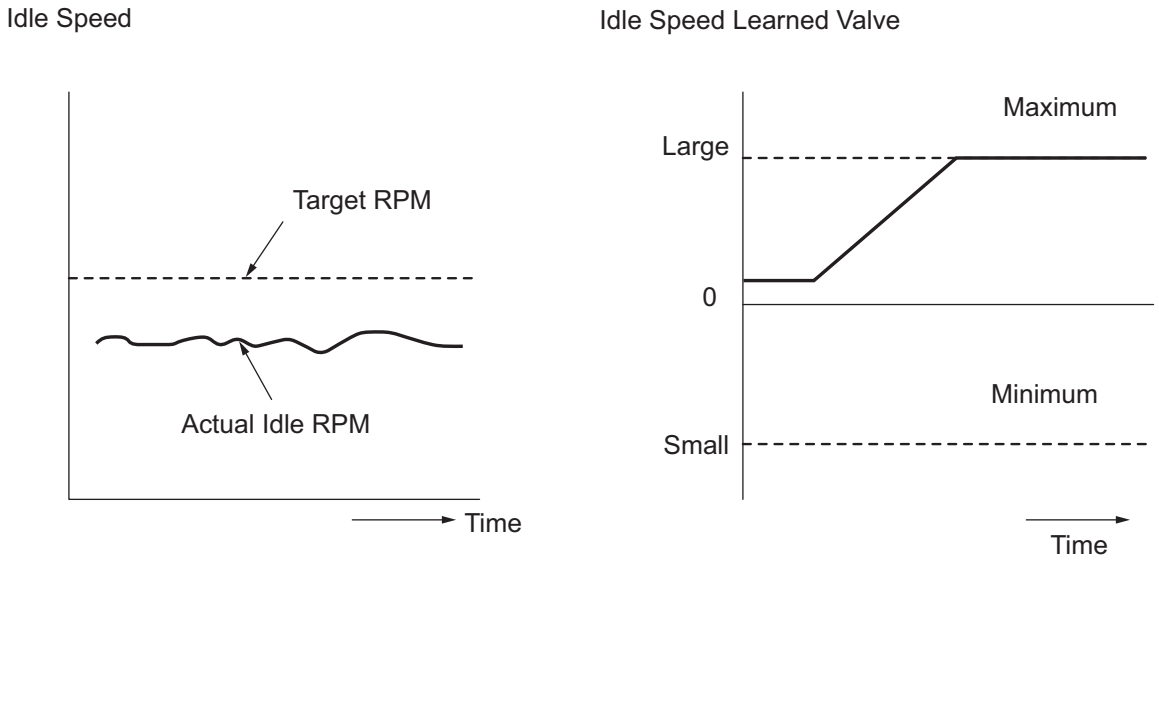

ES

MONITOR STRATEGY

Related DTCs	P0505: ISC Function
Required Sensors/Components (Main)	ETCS
Required Sensors/Components (Related)	Crankshaft position sensor, Engine coolant temperature sensor, and Vehicle speed sensor
Frequency of Operation	Continuous
Duration	10 minutes
MIL Operation	2 driving cycles
Sequence of Operation	None

TYPICAL ENABLING CONDITIONS

Functional check:

Monitor runs whenever following DTCs not present	None
Engine	Running

TYPICAL MALFUNCTION THRESHOLDS

Functional check:

Either of following conditions 1 or 2 met	-
1. Frequency that following conditions (a) and (b) met	5 times or more
(a) Engine RPM - target engine RPM (A/C OFF and NSW OFF)	Below -100 rpm, or 150 rpm or more
(b) Vehicle condition	Stop after vehicle was driven by 6.25 mph (10 km/h) or more
2. Frequency that following conditions (c) and (d) met	Once
(c) Engine RPM - target engine RPM (A/C OFF and NSW OFF)	Below -100 rpm, or 150 rpm or more
(d) ISC airflow rate (learning value)	1.3 L/sec. or less, or 8.5 L/sec. or more

INSPECTION PROCEDURE

HINT:

- The following conditions may also cause DTC P0505 to be set:
  (1) The floor carpet overlapping slightly onto the accelerator pedal, causing the accelerator pedal to be slightly depressed and therefore the throttle valve position to be slightly open.
  (2) The accelerator pedal being not fully released.
- Read freeze frame data using an intelligent tester. Freeze frame data record the engine condition when malfunctions are detected. When troubleshooting, freeze frame data can help determine if the vehicle was moving or stationary, if the engine was warmed up or not, if the air-fuel ratio was lean or rich, and other data, from the time the malfunction occurred.

ES

1 CHECK ANY OTHER DTCS OUTPUT (IN ADDITION TO DTC P0505)

(a) Connect an intelligent tester to the DLC3.
(b) Turn the ignition switch ON.
(c) Turn the tester ON.
(d) Select the following menu items: DIAGNOSIS / ENHANCED OBD II / DTC INFO / CURRENT CODES.
(e) Read DTCs.

Result

Display (DTC Output)	Proceed To
P0505	A
P0505 and other DTCs	B

HINT:
If any DTCs other than P0505 are output, troubleshoot those DTCs first.

B → **GO TO DTC CHART (See page ES-57)**

A

2 CHECK PCV HOSE CONNECTIONS

OK:
PCV hose is connected correctly and is not damaged.

NG → **REPAIR OR REPLACE PCV HOSE**

OK

3 CHECK AIR INDUCTION SYSTEM

(a) Check the air induction system for vacuum leakage.
OK:
No leakage from air induction system.

NG → **REPAIR OR REPLACE AIR INDUCTION SYSTEM**

OK

4	CHECK THROTTLE VALVE

(a) Check the throttle valve condition.
OK:
Throttle valve is not contaminated with foreign objects and moves smoothly.

NG → **REPAIR OR REPLACE THROTTLE WITH MOTOR BODY ASSEMBLY**

OK

REPLACE ECM (See page ES-446)

DTC	P050A	Cold Start Idle Air Control System Performance

DTC	P050B	Cold Start Ignition Timing Performance

DESCRIPTION

The Electronic Throttle Control System (ETCS) controls the engine idling speed. The ETCS operates the throttle actuator to open and close the throttle valve, and adjusts the intake air amount to achieve the target idling speed.
In addition, the ECM retards the ignition timing and the ETCS increases the intake air amount to quickly increase the catalyst temperature at cold start to reduce emissions.

ES

DTC No.	DTC Detection Conditions	Trouble Areas
P050A	Accumulated intake air amount during 10 seconds of idling after cold start, less than threshold (2 trip detection logic)	• Throttle body assembly • Mass air flow meter • Air induction system • PCV hose connections • VVT system • Air cleaner filter element • ECM
P050B	Ignition timing retard value insufficient for 5 seconds or more during 10 seconds of P050A monitoring duration at cold start (2 trip detection logic)	• Throttle body assembly • Mass air flow meter • Air induction system • PCV hose connections • VVT system • Air cleaner filter element • ECM

MONITOR DESCRIPTION

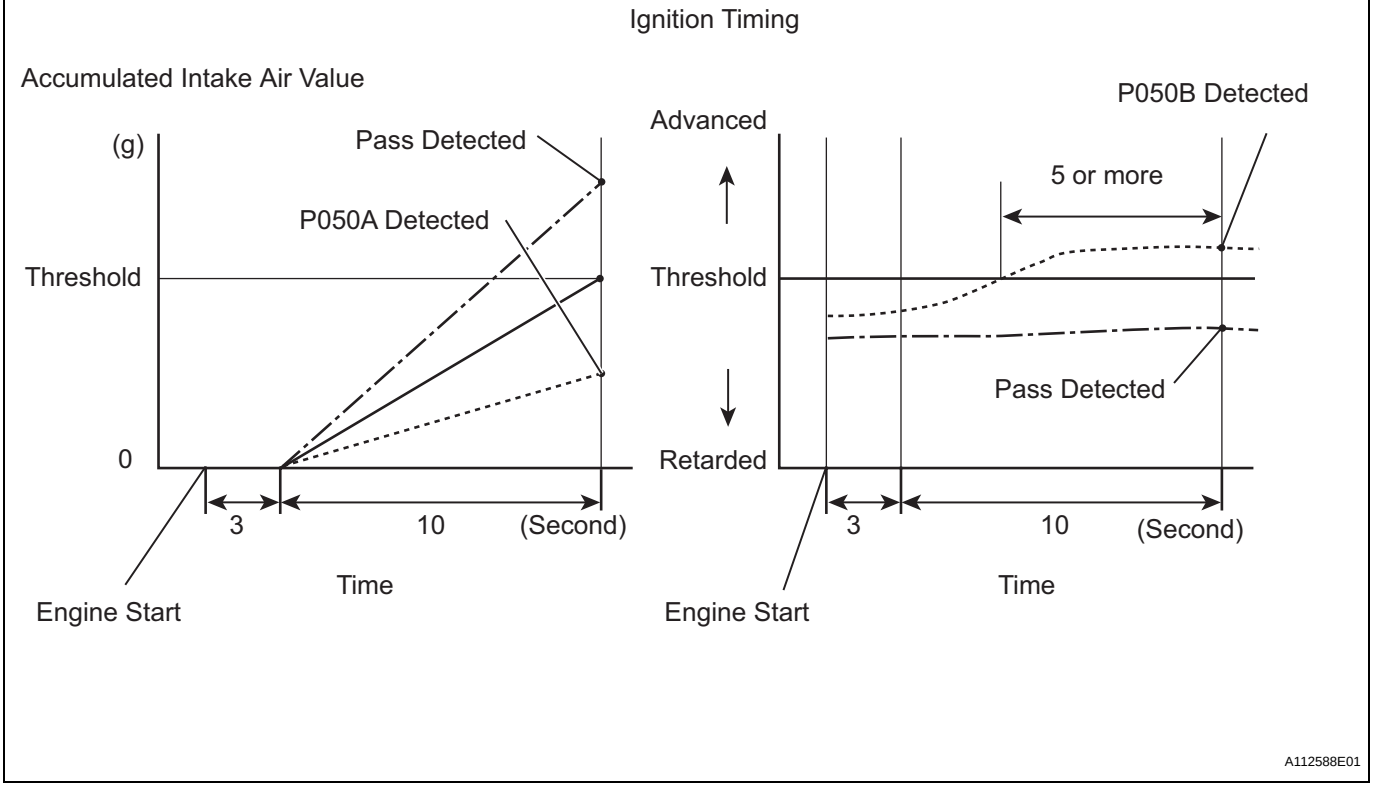

The ECM monitors the intake air amount during idling and the ignition timing.
When the Engine Coolant Temperature (ECT) is between -10°C and 50 °C (14°F and 122°F), the ECM calculates the idling intake air amount for 10 seconds, beginning 3 seconds after the engine starts.
When the accumulated value is below the threshold, the ECM interprets this as a malfunction in the Idle Speed Control (ISC) system at cold start.
The ECM also monitors the ignition timing at cold start, and judges it to be incorrect when it is advanced to the same value for a warm engine for 5 seconds or more of the 10 second monitoring period.
Example:
P050A is detected when all conditions below are met (2 trip detection logic).
1. The ECT is between -10°C and 50 °C (14°F and 122°F) when the engine starts.
2. The engine idles for 13 seconds after engine start.
3. The accumulated intake air amount is below the threshold.

The ECM sets the DTC and illuminates the MIL 13 seconds after the engine is next started.

NOTICE:

When the negative battery terminal is disconnected during inspection or repairs, the ISC learning values are cleared. The ISC learning must be performed by warming up the engine and idling for 5 minutes with the ECT at 75°C (167°F) or more because DTCs cannot be detected with the ISC learning values cleared.

MONITOR STRATEGY

Related DTCs	P050A: Idle speed control problem at cold P050B: Idle ignition timing problem at cold
Required Sensors/Components (Main)	Mass air flow meter
Required Sensors/Components (Related)	Engine Coolant Temperature (ECT) sensor, Throttle position sensor, Vehicle speed sensor
Frequency of Operation	Once per driving cycle
Duration	10 seconds
MIL Operation	2 driving cycles
Sequence of Operation	None

TYPICAL ENABLING CONDITIONS

P050A:

Battery voltage	8 V or more
Time after engine start	3 seconds or more
Starter	OFF
ECT at engine start	-10°C (14°F) or more
ECT	-10°C to 50°C (14°F to 122°F)
Engine idling time	3 seconds or more
Fuel-cut	OFF
Vehicle speed	Less than 1.875 mph (3 km/h)
Time after shift position changed (A/T)	1 second or more
Atmospheric pressure	76 kPa (570 mmHg) or more

P050B:

Battery voltage	8 V or more
Time after engine start	3 seconds or more
Starter	OFF
ECT at engine start	-10°C (14°F) or more
ECT	-10°C to 50°C (14°F to 122°F)
Engine idling time	3 seconds or more
Fuel-cut	OFF
Vehicle speed	Less than 1.875 mph (3 km/h)

TYPICAL MALFUNCTION THRESHOLDS

P050A:

Accumulated air flow amount (M/T)	Varies with ECT (Example: Less than 42.5 g)
Accumulated air flow amount (A/T)	Varies with ECT (Example: Less than 47.5 g)

P050B:

Accumulated time when ignition timing retard value insufficient	5 seconds or more

INSPECTION PROCEDURE

HINT:

Read freeze frame data using an intelligent tester. Freeze frame data record the engine condition when malfunctions are detected. When troubleshooting, freeze frame data can help determine if the vehicle was moving or stationary, if the engine was warmed up or not, if the air-fuel ratio was lean or rich, and other data, from the time the malfunction occurred.

ES

1	CHECK ANY OTHER DTCS OUTPUT (IN ADDITION TO DTC P050A AND/OR P050B)

(a) Connect an intelligent tester to the DLC3.
(b) Turn the ignition switch ON.
(c) Turn the tester ON.
(d) Select the following the menu items: DIAGNOSIS / ENHANCED OBD II / DTC INFO / CURRENT CODES.
(e) Read the DTCs.

Result

Display (DTC Output)	Proceed To
P050A and/or P050B	A
P050A and/or P050B and other DTCs	B

HINT:

If any DTCs other than P050A and P050B are output, troubleshoot those DTCs first.

B → **GO TO DTC CHART (See page ES-57)**

A

2	READ VALUE USING INTELLIGENT TESTER (FUEL TRIM)

HINT:

Calculate the total fuel trim values to check the characteristic deviation of the mass air flow meter.

(a) Connect the intelligent tester to the DLC3.
(b) Turn the ignition switch ON.
(c) Turn the tester ON.
(d) Select the following menu items: DIAGNOSIS / ENHANCED OBD II / DATA LIST / PRIMARY / SHORT FT #1 and LONG FT #1, or SHORT FT #2 and LONG FT #2.
(e) Read the values displayed on the tester.
(f) Add together the SHORT FT #1 and LONG FT #1, or SHORT FT #2 and LONG FT #2 values to obtain the total FUEL TRIM.

OK:
Total of SHORT FT #1 and LONG FT #1, or SHORT FT #2 and LONG FT #2 values is between -20 % and 20 %.

OK → **Go to step 12**

NG

3	PERFORM ACTIVE TEST USING INTELLIGENT TESTER (OPERATE OCV)

(a) Connect the intelligent tester to the DLC3.
(b) Start the engine and turn the tester ON.
(c) Warm up the engine.
(d) Select the following menu items: DIAGNOSIS / ENHANCED OBD II / ACTIVE TEST / VVT CTRL B1 and VVT CTRL B2.
(e) Check the engine speed while operating the Oil Control Valve (OCV) using the tester.

OK

Tester Operations	Specified Conditions
OCV OFF	Normal engine speed
OCV ON	Engine idles roughly or stalls (soon after OCV switched from OFF to ON)

NG → **Go to step 8**

OK

4	CHECK PCV HOSE CONNECTIONS

OK:
PCV hose is connected correctly and is not damaged.

NG → **Go to step 9**

OK

5	CHECK AIR INDUCTION SYSTEM

(a) Check the air induction system for vacuum leakage.
OK:
No leakage from air induction system.

NG → **Go to step 10**

OK

6	CHECK AIR CLEANER FILTER ELEMENT SUB-ASSEMBLY

(a) Visually check that the air cleaner filter element is not excessively contaminated with dirt or oil.

OK:
Air cleaner filter element is not excessively contaminated with dirt or oil.

NG → **Go to step 11**

OK

7	REPLACE MASS AIR FLOW METER

Replace the mass air flow meter (See page ES-409).

NEXT → **Go to step 15**

8	CHECK AND REPAIR VVT SYSTEM

NEXT → **Go to step 15**

9	REPAIR OR REPLACE PCV HOSE

NEXT → **Go to step 15**

10	REPAIR OR REPLACE AIR INDUCTION SYSTEM

NEXT → **Go to step 15**

11	REPLACE AIR CLEANER FILTER ELEMENT SUB-ASSEMBLY

NEXT → **Go to step 15**

12	CHECK THROTTLE VALVE

(a) Check for deposits around the throttle valve and throttle valve condition.
OK:
No deposits around throttle valve and throttle valve moves smoothly.

NG → **Go to step 14**

OK

13	REPLACE ECM

Replace the ECM (See page ES-446).

NEXT → **Go to step 15**

14	REPAIR OR REPLACE THROTTLE WITH MOTOR BODY ASSEMBLY

NEXT → Go to step 15

15	CHECK WHETHER DTC OUTPUT RECURS (DTC P050A AND/OR P050B)

NOTICE:
In this operation, the engine must be cold (the same level as the engine coolant temperature recorded in the freeze frame data).

(a) Connect the intelligent tester to the DLC3.
(b) Turn the ignition switch ON.
(c) Turn the tester ON.
(d) Clear DTCs (See page ES-38).
(e) Switch the ECM from normal mode to check mode using the tester (See page ES-42).
(f) Start the engine to idle for a minute.
OK:
Stable fast idling.
(g) Read DTCs.
OK:
No DTC output.

NEXT

END

DTC	P0560	System Voltage

DESCRIPTION

The battery supplies electricity to the ECM even when the ignition switch is in the OFF position. This power allows the ECM to store data such as DTC history, freeze frame data and fuel trim values. If the battery voltage falls below a minimum level, these memories are cleared and the ECM determines that there is a malfunction in the power supply circuit. When the engine is next started, the ECM illuminates the MIL and sets the DTC.

DTC No.	DTC Detection Conditions	Trouble Areas
P0560	Open in ECM back up power source circuit (1 trip detection logic)	• Open in back up power source circuit • EFI fuse • ECM

ES

HINT:
If DTC P0560 is set, the ECM does not store other DTCs.

MONITOR STRATEGY

Related DTCs	P0560: ECM system voltage
Required Sensors/Components (Main)	ECM
Required Sensors/Components (Related)	-
Frequency of Operation	Continuous
Duration	3 seconds
MIL Operation	Immediate (MIL illuminated after next engine start)
Sequence of Operation	None

TYPICAL ENABLING CONDITIONS

Monitor runs whenever following DTCs not present	None
Stand-by RAM	Initialized

TYPICAL MALFUNCTION THRESHOLDS

ECM power source	Less than 3.5 V

WIRING DIAGRAM

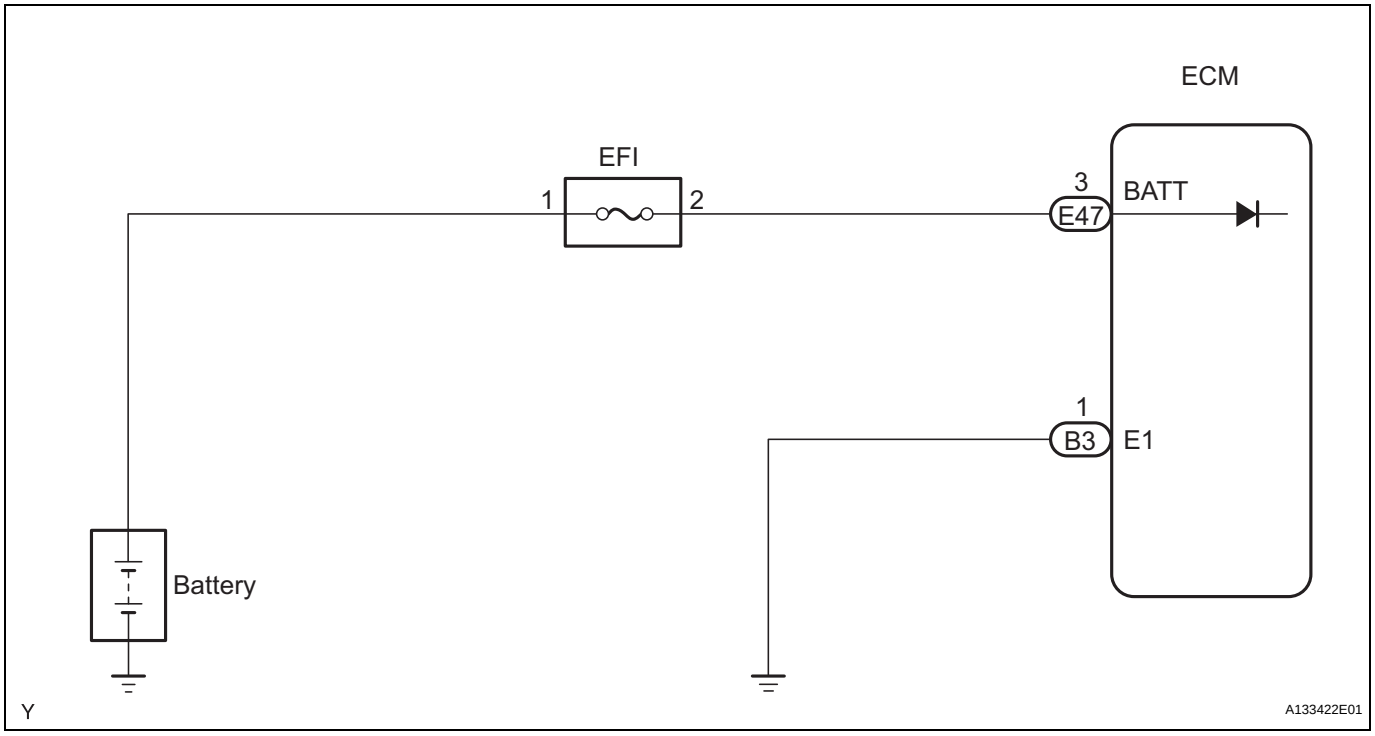

ES

INSPECTION PROCEDURE

HINT:

Read freeze frame data using an intelligent tester. Freeze frame data record the engine condition when malfunctions are detected. When troubleshooting, freeze frame data can help determine if the vehicle was moving or stationary, if the engine was warmed up or not, if the air-fuel ratio was lean or rich, and other data, from the time the malfunction occurred.

1	CHECK FUSE (EFI FUSE)

Engine Room R/B:

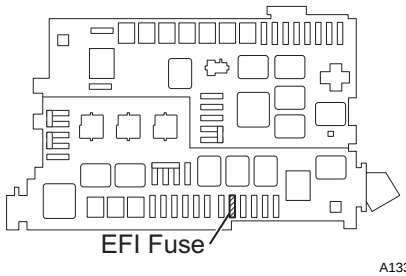

(a) Remove the EFI fuse from the engine room R/B.
(b) Check the EFI fuse resistance.
Standard Resistance:
Below 1 Ω
(c) Reinstall the EFI fuse.

NG → **CHECK FOR SHORT IN ALL HARNESSES AND CONNECTORS CONNECTED TO FUSE AND REPLACE FUSE**

OK

2 INSPECT ECM (BATT VOLTAGE)

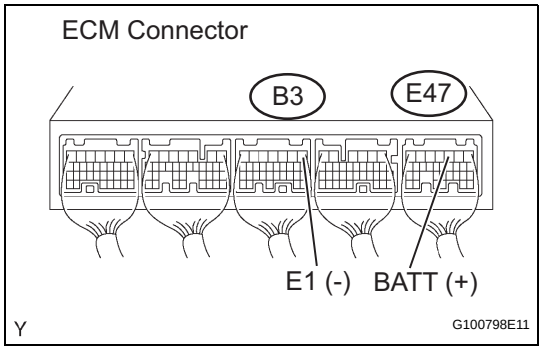

(a) Measure the voltage between the terminals of the B3 and E47 ECM connectors.

Standard Voltage

Tester Connections	Specified Conditions
BATT (E47-3) - E1 (B3-1)	11 to 14 V

NG → **Go to step 3**

OK

REPLACE ECM (See page ES-446)

3 CHECK HARNESS AND CONNECTOR (ECM - EFI FUSE, EFI FUSE - BATTERY)

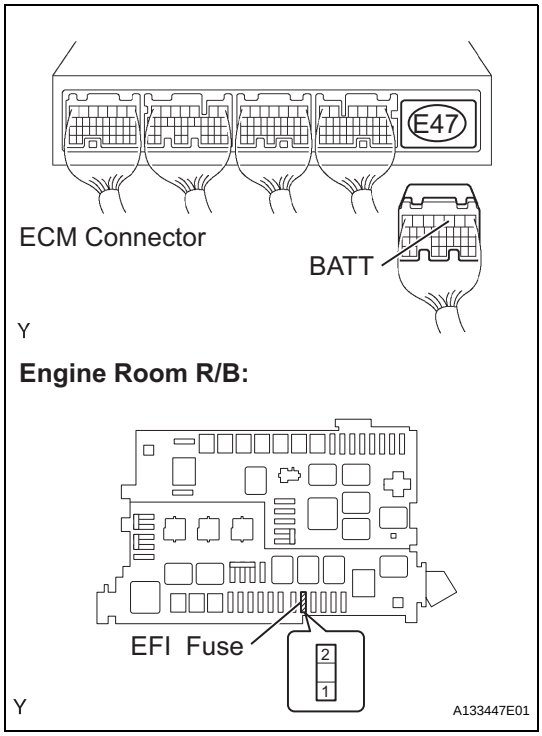

(a) Check the harness and the connector between the EFI fuse and ECM.
(1) Remove the EFI fuse from the engine room R/B.
(2) Disconnect the E47 ECM connector.
(3) Check the resistance.

Standard Resistance (Check for open)

Tester Connections	Specified Conditions
EFI fuse (2) - BATT (E47-3)	Below 1 Ω

Standard Resistance (Check for short)

Tester Connections	Specified Conditions
EFI fuse (2) or BATT (E47-3) - Body ground	10 kΩ or higher

(4) Reconnect the ECM connector.
(5) Reinstall the EFI fuse.

(b) Check the harness and the connector between the EFI fuse and battery.
(1) Remove the EFI fuse from the engine room R/B.
(2) Disconnect the positive battery terminal.
(3) Check the resistance.

Standard Resistance (Check for open)

Tester Connections	Specified Conditions
Battery positive terminal - EFI fuse (1)	Below 1 Ω

Standard Resistance (Check for short)

Tester Connections	Specified Conditions
Battery positive terminal or EFI fuse (1) - Body ground	10 kΩ or higher

(4) Reconnect the positive battery terminal.
(5) Reinstall the EFI fuse.

NG → **REPAIR OR REPLACE HARNESS OR CONNECTOR**

OK

4	INSPECT BATTERY

(a) Check that the battery is not depleted.
OK:
Battery is not depleted.

NG → **REPLACE BATTERY**

OK

CHECK AND REPLACE ENGINE ROOM RELAY BLOCK

DTC	P0604	Internal Control Module Random Access Memory (RAM) Error

DTC	P0606	ECM / PCM Processor

DTC	P0607	Control Module Performance

DTC	P0657	Actuator Supply Voltage Circuit / Open

DESCRIPTION

The ECM continuously monitors its own internal memory status, internal circuits, and output signals transmitted to the throttle actuator. This self-check insures that the ECM is functioning properly. If any malfunction is detected, the ECM sets the appropriate DTC and illuminates the MIL.
The ECM memory status is diagnosed by internal mirroring of the main CPU and the sub CPU to detect Random Access Memory (RAM) errors. The two CPUs also perform continuous mutual monitoring. The ECM illuminates the MIL and sets a DTC if: 1) outputs from the two CPUs are different or deviate from the standards, 2) the signals sent to the throttle actuator deviate from the standards, 3) a malfunction is found in the throttle actuator supply voltage, and 4) any other ECM malfunction is found.

DTC No.	DTC Detection Conditions	Trouble Areas
P0604 P0606 P0607 P0657	ECM internal error (1 trip detection logic)	ECM

MONITOR STRATEGY

Related DTCs	P0604: ECM RAM error P0606: ECM range check P0607: ECM CPU malfunction P0657: ETCS power supply
Required Sensors/Components (Main)	ECM
Required Sensors/Components (Related)	-
Frequency of Operation	Once per driving cycle: P0657 Continuous: P0604, P0606, P0607
Duration	P0604: 6 times or more P0606, P0607 and P0657: Within 1 second
MIL Operation	Immediate
Sequence of Operation	None

TYPICAL ENABLING CONDITIONS

Monitor runs whenever following DTCs not present	None

TYPICAL MALFUNCTION THRESHOLDS

ECM RAM errors (P0604):

RAM mirror check	fail

ECM CPU range check (P0606):

Either of following conditions met:	-
Difference between throttle valve position of main CPU and throttle valve position of sub CPU	0.3 V or more
Difference between accelerator pedal position of main CPU and accelerator pedal position of sub CPU	0.3 V or more

ECM CPU malfunction (P0607):

Either A or B met	-
A. Following conditions met	
CPU reset	1 time or more
Learned TP - learned APP	0.4 V or more
Throttle actuator	OFF
B. CPU reset	2 times or more

Electronic throttle control system power supply function of ECM malfunctions (P0657):

ETCS (Electronic Throttle Control System) power supply when ignition switch turned ON	7 V or more

INSPECTION PROCEDURE

Read freeze frame data using an intelligent tester. Freeze frame data record the engine condition when malfunctions are detected. When troubleshooting, freeze frame data can help determine if the vehicle was moving or stationary, if the engine was warmed up or not, if the air-fuel ratio was lean or rich, and other data, from the time the malfunction occurred.

1	CHECK ANY OTHER DTCS OUTPUT (IN ADDITION TO DTC P0604/P0606/P0607/P0657)

(a) Connect an intelligent tester to the DLC3.
(b) Turn the ignition switch ON.
(c) Turn the tester ON.
(d) Enter the following menus: DIAGNOSIS / ENHANCED II / DTC INFO / CURRENT CODES.
(e) Read the DTC.

Result

Display (DTC Output)	Proceed To
P0604, P0606, P0607, P0657	A
No output DTC	B

B → **GO TO DTC CHART (See page ES-57)**

A →

REPLACE ECM (See page ES-446)

DTC	P0617	Starter Relay Circuit High

DESCRIPTION

While the engine is being cranked, the positive battery voltage is applied to terminal STA of the ECM. If the ECM detects the Starter Control (STA) signal while the vehicle is being driven, it determines that there is a malfunction in the STA circuit. The ECM then illuminates the MIL and sets the DTC.
This monitor runs when the vehicle is driven at 12.4 mph (20 km/h) for over 20 seconds.

DTC No.	DTC Detection Conditions	Trouble Areas
P0617	When conditions (a), (b) and (c) met for 20 seconds (1 trip detection logic) (a) Vehicle speed more than 12.4 mph (20 km/h) (b) Engine speed more than 1,000 rpm (c) STA signal ON	• Park/Neutral Position (PNP) switch (A/T*) • Clutch start switch (M/T*) • Starter relay circuit • Ignition switch • ECM

ES

*: A/T denotes Automatic Transmission models and M/T denotes Manual Transmission models.

MONITOR STRATEGY

Related DTCs	P0617: Starter signal
Required Sensors/Components (Main)	STARTER relay, PNP switch, Clutch start switch and Ignition switch
Required Sensors/Components (Related)	Vehicle Speed Sensor (VSS), Crankshaft Position (CKP) sensor
Frequency of Operation	Continuous
Duration	20 seconds
MIL Operation	Immediate
Sequence of Operation	None

TYPICAL ENABLING CONDITIONS

Monitor runs whenever following DTCs not present	None
Battery voltage	10.5 V or more
Vehicle speed	12.4 mph (20 km/h) or more
Engine speed	1,000 rpm or more

TYPICAL MALFUNCTION THRESHOLDS

Starter signal	ON

WIRING DIAGRAM

For Manual Transmission Models:

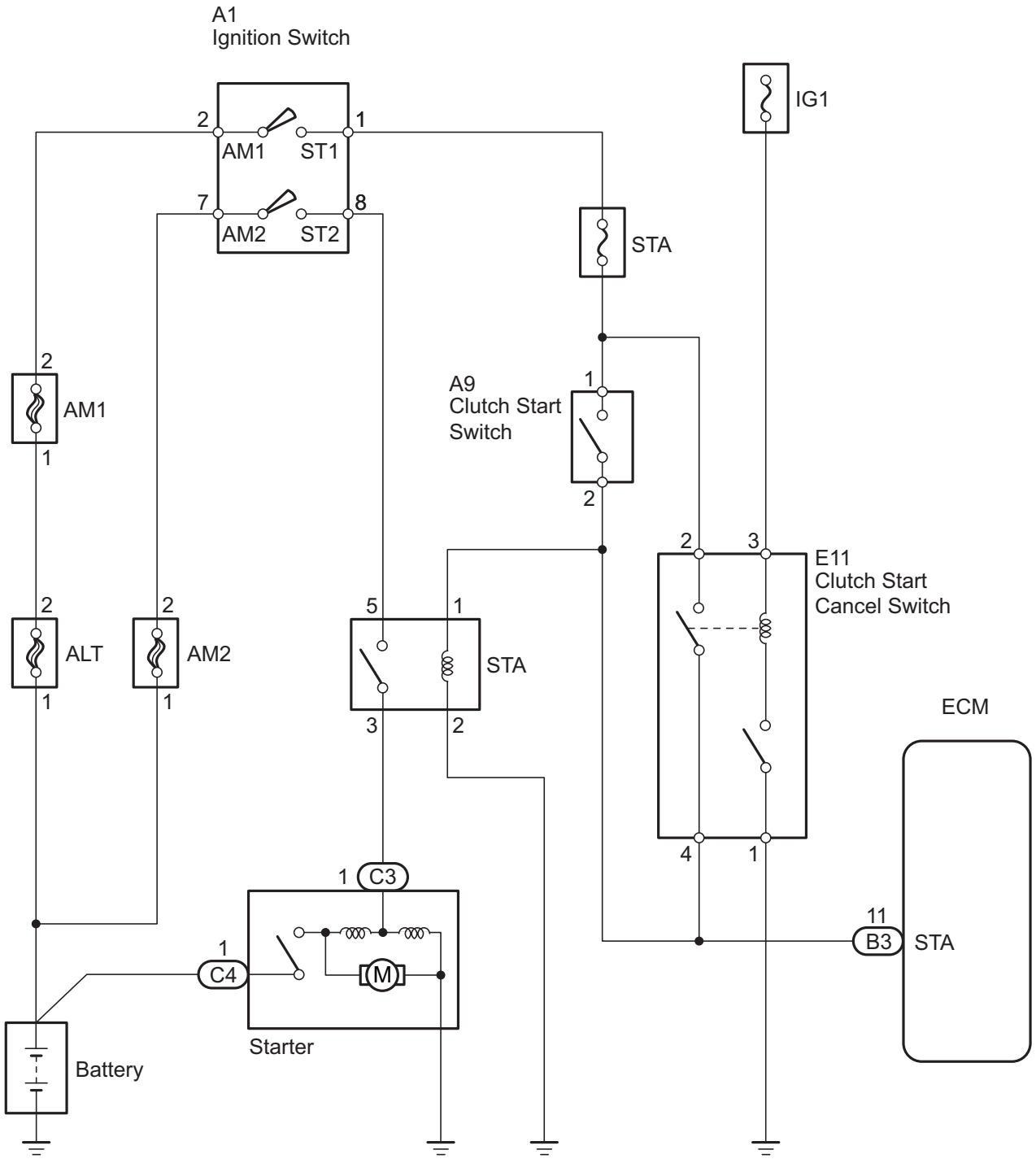

ES

For Automatic Transmission Models:

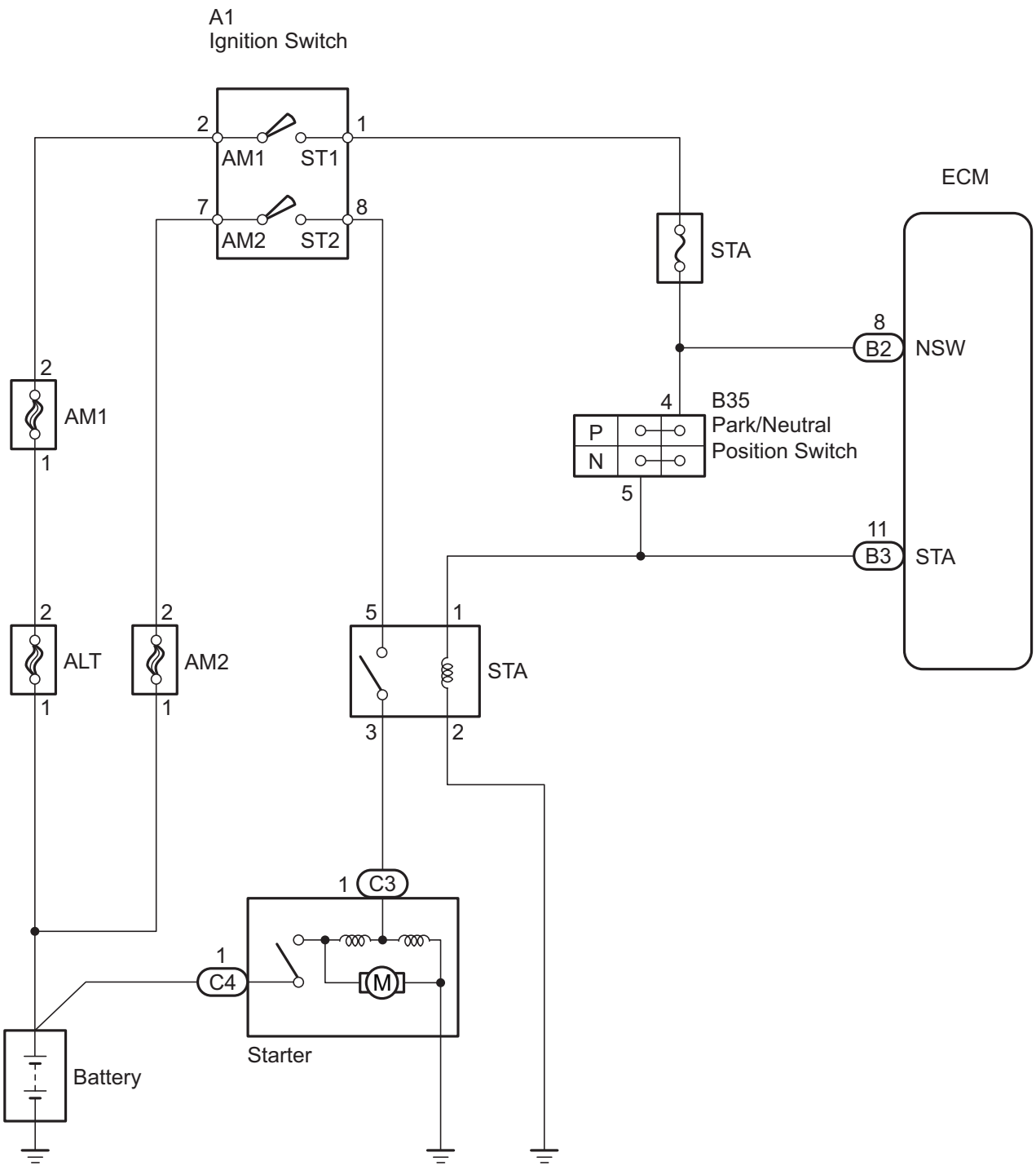

INSPECTION PROCEDURE

HINT:

- The following troubleshooting flowchart is based on the premise that the engine is cranked normally. If the engine will not crank, proceed to the problem symptoms table (See page ES-28).

- Read freeze frame data using an intelligent tester. Freeze frame data record the engine condition when malfunctions are detected. When troubleshooting, freeze frame data can help determine if the vehicle was moving or stationary, if the engine was warmed up or not, if the air-fuel ratio was lean or rich, and other data, from the time the malfunction occurred.

1 READ VALUE USING INTELLIGENT TESTER (STARTER SIGNAL)

(a) Connect an intelligent tester to the DLC3.
(b) Turn the ignition switch ON and turn the tester ON.
(c) Select the following menu items: DIAGNOSIS / ENHANCED OBD II / DATA LIST / PRIMARY / STARTER SIG.
(d) Check the value displayed on the tester when the ignition switch is turned to ON and START positions.

ES

OK

Ignition Switch Positions	ON	START
STARTER SIG	OFF	ON

OK → **CHECK FOR INTERMITTENT PROBLEMS**

NG

2 INSPECT PARK/NEUTRAL POSITION SWITCH OR CLUTCH START SWITCH

Component Side:

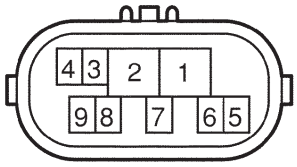

PNP Switch

P A093221E10

(a) Inspect the Park/Neutral Position (PNP) switch (For Automatic Transmission models).
(1) Disconnect the B35 PNP switch connector.
(2) Check the resistance when the transmission gear selector lever is moved to each position.
Standard Resistance

Gear Selector Lever Positions	Tester Connections	Specified Conditions
P	2 - 6, 4 - 5	Below 1 Ω
R	1 - 2	
N	2 - 9, 4 - 5	
D	2 - 7	
2	2 - 3	
L	2 - 8	

(3) Reconnect the PNP switch connector.

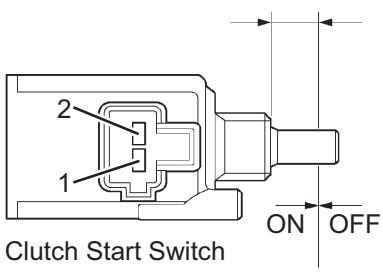

Clutch Start Switch

Y A082259E13

(b) Inspect the clutch start switch (For Manual Transmission models).
(1) Disconnect the A9 clutch start switch connector.
(2) Check the resistance when the clutch start switch is ON and OFF.
Standard Resistance

Switch Positions	Tester Connections	Specified Conditions
ON (pushed)	1 - 2	Below 1 Ω
OFF (free)	1 - 2	10 kΩ or higher

(3) Reconnect the clutch start switch connector.

OK → **Go to step 4**

NG

3	REPLACE PARK / NEUTRAL POSITION SWITCH ASSEMBLY

Replace the park/neutral position switch assembly (See page AT-153).

NEXT

4	READ VALUE USING INTELLIGENT TESTER (STARTER SIGNAL)

ES

(a) Connect an intelligent tester to the DLC3.
(b) Turn the ignition switch ON and turn the tester ON.
(c) Select the following menu items: DIAGNOSIS / ENHANCED OBD II / DATA LIST / PRIMARY / STARTER SIG.
(d) Check the value displayed on the tester when the ignition switch is turned to ON and START positions.

OK

Ignition Switch Positions	ON	START
STARTER SIG	OFF	ON

OK → **SYSTEM OK**

NG

5	INSPECT IGNITION OR STARTER SWITCH ASSEMBLY

Component Side:

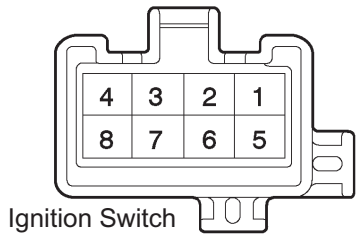

(a) Disconnect the A1 ignition switch connector.
(b) Check the resistance.

Standard Resistance

Ignition Switch Positions	Tester Connections	Specified Conditions
LOCK	All Terminals	10 kΩ or higher
ACC	2 - 3	Below 1 Ω
ON	2 - 3 - 4, 6 - 7	
START	1 - 2 - 4, 6 - 7 - 8	

(c) Reconnect the ignition switch connector.

OK → **Go to step 7**

NG

6	REPLACE IGNITION OR STARTER SWITCH ASSEMBLY

Replace the ignition or starter switch assembly (See page ST-19).

NEXT

7	READ VALUE USING INTELLIGENT TESTER (STARTER SIGNAL)

(a) Connect an intelligent tester to the DLC3.
(b) Turn the ignition switch ON and turn the tester ON.
(c) Select the following menu items: DIAGNOSIS / ENHANCED OBD II / DATA LIST / PRIMARY / STARTER SIG.
(d) Check the value displayed on the tester when the ignition switch is turned to ON and START positions.

OK

Ignition Switch Positions	ON	START
STARTER SIG	OFF	ON

ES

OK → **SYSTEM OK**

NG

REPAIR OR REPLACE HARNESS OR CONNECTOR

DTC	P0630	VIN not Programmed or Mismatch - ECM / PCM

DESCRIPTION

DTC P0630 is set when the Vehicle Identification Number (VIN) is not stored in the Engine Control Module (ECM) or the input VIN is not accurate. Input the VIN with an intelligent tester.

DTC No.	DTC Detection Conditions	Trouble Areas
P0630	• VIN not stored in ECM • Input VIN in ECM not accurate	• ECM

MONITOR STRATEGY

ES

Related DTCs	P0630: VIN not programmed
Required Sensors/Components (Main)	ECM
Required Sensors/Components (Related)	-
Frequency of Operation	Continuous
Duration	0.5 seconds
MIL Operation	Immediate
Sequence of Operation	None

TYPICAL ENABLING CONDITIONS

Battery voltage	8 V or more
Ignition switch	ON
Starter	OFF

TYPICAL MALFUNCTION THRESHOLDS

VIN code	Not programmed

COMPONENT OPERATING RANGE

VIN code	Programmed

INSPECTION PROCEDURE

1	READ CURRENT DTC

(a) Connect an intelligent tester to the DLC3.
(b) Turn the ignition switch ON and turn the tester ON.
(c) Select the following menu items: DIAGNOSIS / ENHANCED OBD II / DTC INFO / CURRENT CODES.
(d) Read DTCs.

Result

Display (DTC Output)	Proceed To
P0630	A
P0630 and other DTCs	B

If any DTCs other than P0630 are output, troubleshoot those DTCs first.

NOTICE:
If P0630 is set, the VIN must be input to the ECM using an intelligent tester. However, all DTCs are cleared automatically by the tester when inputting the VIN. If DTCs other than P0630 are set, check them first.

B	**GO TO DTC CHART (See page ES-57)**

A

2	**INPUT VIN WITH INTELLIGENT TESTER**

Refer to REGISTRATION (See page ES-15).

ES

NEXT

END

DTC	P0724	Brake Switch "B" Circuit High

DESCRIPTION

The purpose of this circuit is to prevent the engine from stalling, while driving in lock-up condition, when brakes are suddenly applied.
When the brake pedal is depressed, this switch sends a signals to the ECM. Then the ECM cancels the operation of the lock-up clutch while braking is in progress.

DTC No.	DTC Detection Conditions	Trouble Areas
P0724	The stop light switch remains ON even when the vehicle repeats 5 cycles of STOP (less than 1.86 mph (3 km/h)) and GO (18.65 mph (30 km/h) or more) (2 trip detection logic)	• Short in stop light switch signal circuit • Stop light switch • ECM

ES

MONITOR DESCRIPTION

This DTC indicates that the stop light switch remains ON. When the stop light switch remains ON during "stop and go" driving, the ECM interprets this as a fault in the stop light switch and the MIL comes on and the ECM stores the DTC. The vehicle must stop (less than 1.86 mph (3 km/h)) and go (18.65 mph (30 km/h) or more) 5 times during 2 driving cycles, in order to detect a malfunction.

MONITOR STRATEGY

Related DTCs	P0724: Stop light switch/Range check/Rationality
Required sensors/Components (Main)	Stop light switch
Required sensors/Components (Related)	Speed sensor
Frequency of Operation	Continuous
Duration	5 times
MIL Operation	2 driving cycles
Sequence of Operation	None

TYPICAL ENABLING CONDITIONS

The stop light switch remains ON during GO and STOP 5 times.
GO and STOP are defined as follows;

Monitor will run whenever following DTCs not present	None
GO: Vehicle speed	18.65 mph (30 km/h) or more
STOP: Vehicle speed	Less than 1.86 mph (3 km/h)

TYPICAL MALFUNCTION THRESHOLDS

Stop light switch status	Stuck ON

WIRING DIAGRAM

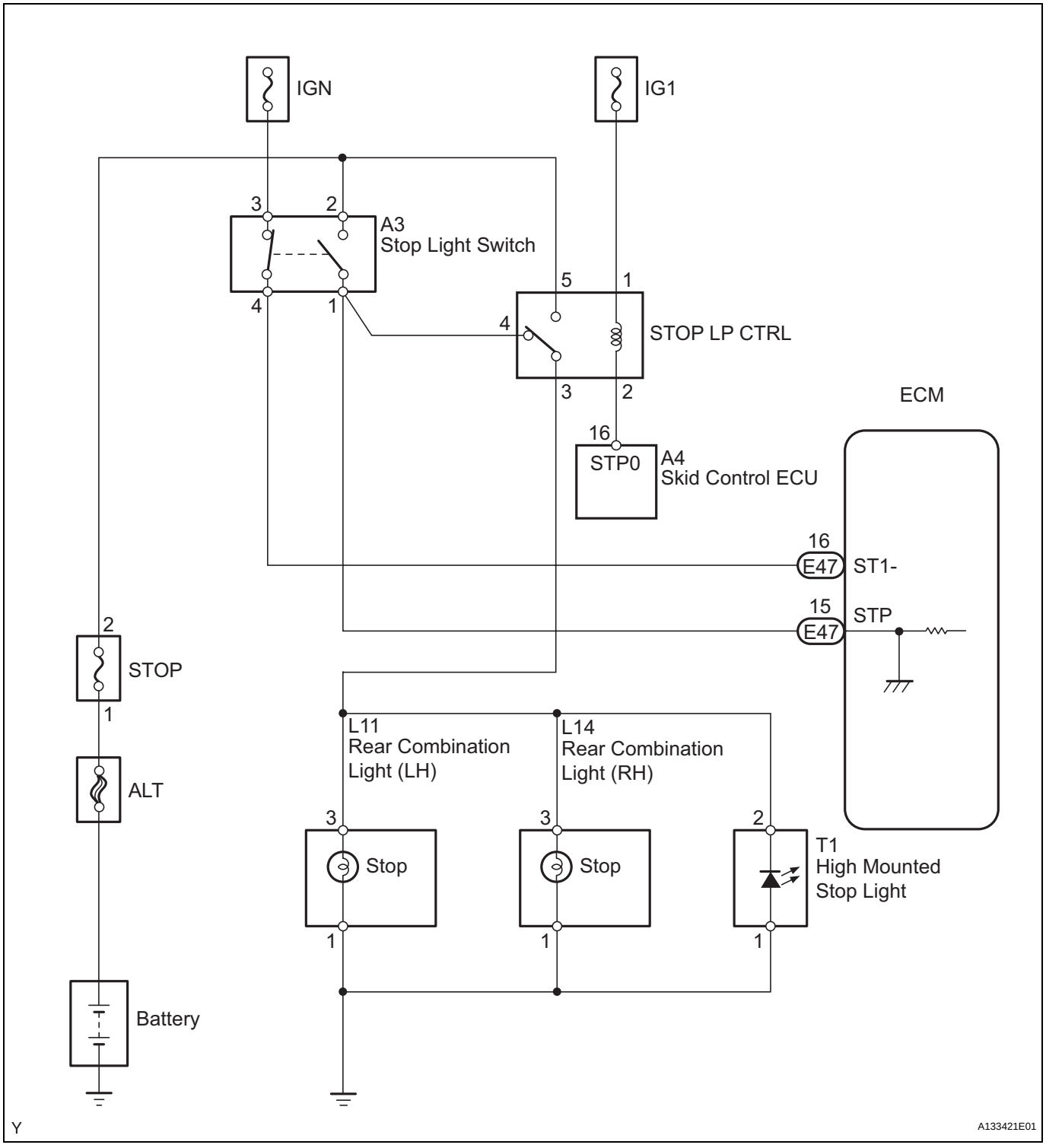

INSPECTION PROCEDURE

HINT:

Read freeze frame data using an intelligent tester. Freeze frame data record the engine condition when malfunctions are detected. When troubleshooting, freeze frame data can help determine if the vehicle was moving or stationary, if the engine was warmed up or not, if the air-fuel ratio was lean or rich, and other data, from the time the malfunction occurred.

1	READ VALUE USING INTELLIGENT TESTER (STOP LIGHT SW)

(a) Connect an intelligent tester to the DLC3.
(b) Turn the ignition switch ON and turn the tester ON.
(c) Select the following menu items: DIAGNOSIS / ENHANCED OBD II / DATA LIST / PRIMARY / STOP LIGHT SW.
(d) Read the values displayed on the tester.

OK

Item	Measurement Item: Range (display)	Normal Condition
STOP LIGHT SW	Stop light switch status: ON or OFF	• ON: Brake pedal is depressed • OFF: Brake pedal is released

ES

OK → CHECK FOR INTERMITTENT PROBLEMS

NG

2	INSPECT STOP LIGHT SWITCH ASSEMBLY (See page ES-254)

NG → REPLACE STOP LIGHT SWITCH ASSEMBLY (See page LI-111)

OK

3	CHECK HARNESS AND CONNECTOR (STOP LIGHT SWITCH - ECM) (See page ES-255)

NG → REPAIR OR REPLACE HARNESS OR CONNECTOR

OK

REPLACE ECM (See page ES-446)

DTC	P1500	AC Inverter Malfunction

DESCRIPTION

This vehicle is equipped with a voltage inverter, which supplies power to various electrical appliances. When the main switch of the voltage inverter is turned ON, the inverter relay turns ON, and the inverter then converts the 12 V Direct Current (DC) of the battery into an 115 V Alternating Current (AC). The voltage inverter can output a maximum of 400 W from an outlet.
When the AC 115 V is output, a load is applied to the engine. The ECM controls the engine idling speed according to the vehicle speed and engine load. A speed signal is input to the inverter and an idle-up signal is transmitted to the ECM.

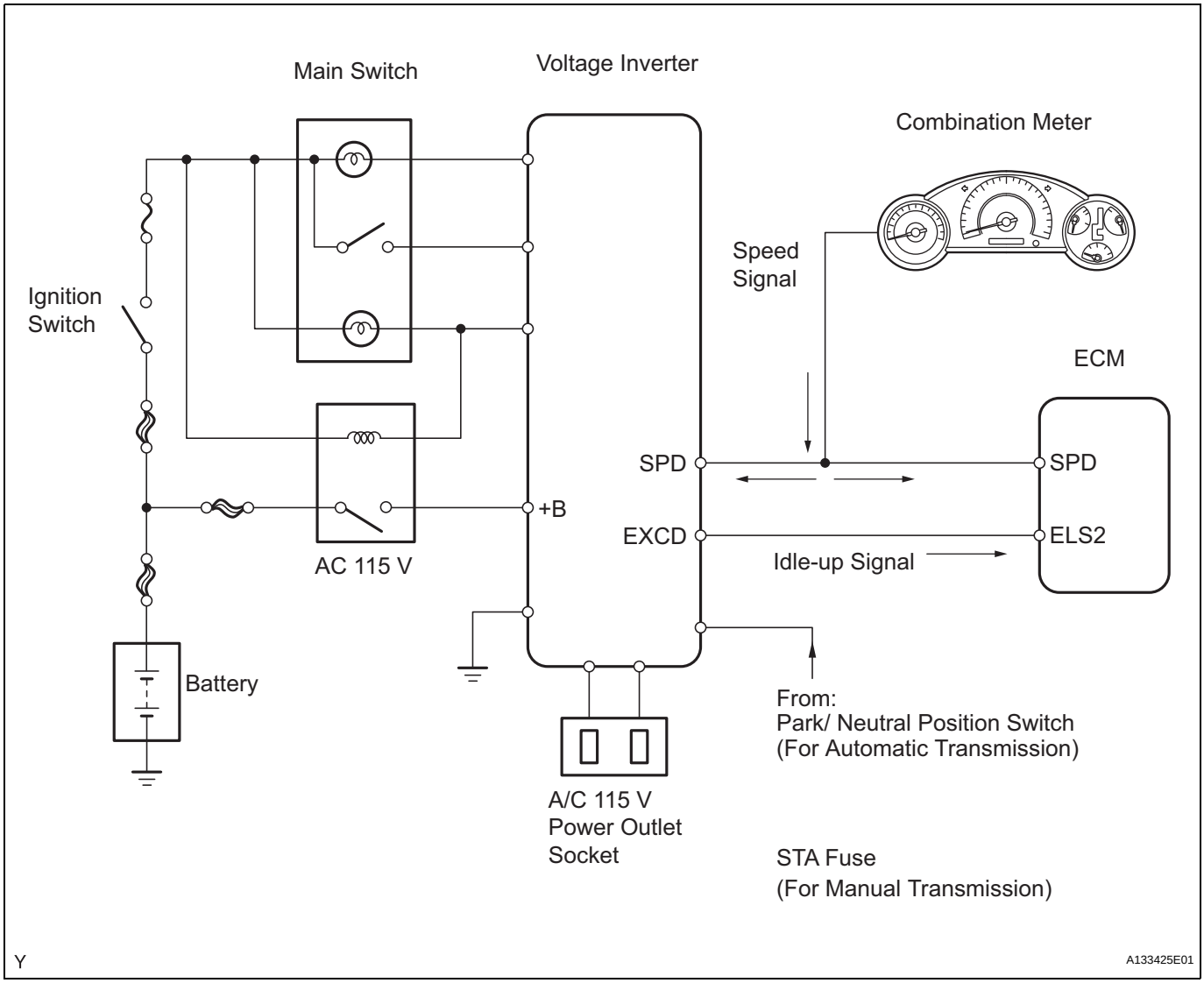

DTC No.	DTC Detection Conditions	Trouble Areas
P1500	While vehicle running, idle-up signal input to ECM for 10 seconds (2 trip detection logic)	• Open or short in speed signal circuit • Short between idle-up signal and +B circuits • Voltage inverter • ECM

MONITOR DESCRIPTION

While the engine is idling, the ECM performs idle-up according to the power supply of the inverter to stabilize the engine idling speed.

When the vehicle is stationary and the inverter input exceeds 8.3 A, the inverter sends an idle-up signal from the EXCD terminal of the inverter to the ELS2 terminal of the ECM.
If the idle-up signal is input into the ECM for 10 seconds while the vehicle is running, the ECM interprets this as a malfunction in the inverter circuit and sets the DTC.

MONITOR STRATEGY

Related DTCs	P1500: Voltage inverter performance
Required Sensors/Components (Main)	Voltage inverter
Required Sensors/Components (Related)	-
Frequency of Operation	Continuous
Duration	10 seconds
MIL Operation	2 driving cycles
Sequence of Operation	None

ES

TYPICAL ENABLING CONDITIONS

Monitor runs whenever following DTCs not present	None
Vehicle speed	3.11 mph (5 km/h) or more
Battery voltage	8 V or more
Ignition switch	ON
Starter	OFF

TYPICAL MALFUNCTION THRESHOLDS

Electric load signal 2	ON

WIRING DIAGRAM

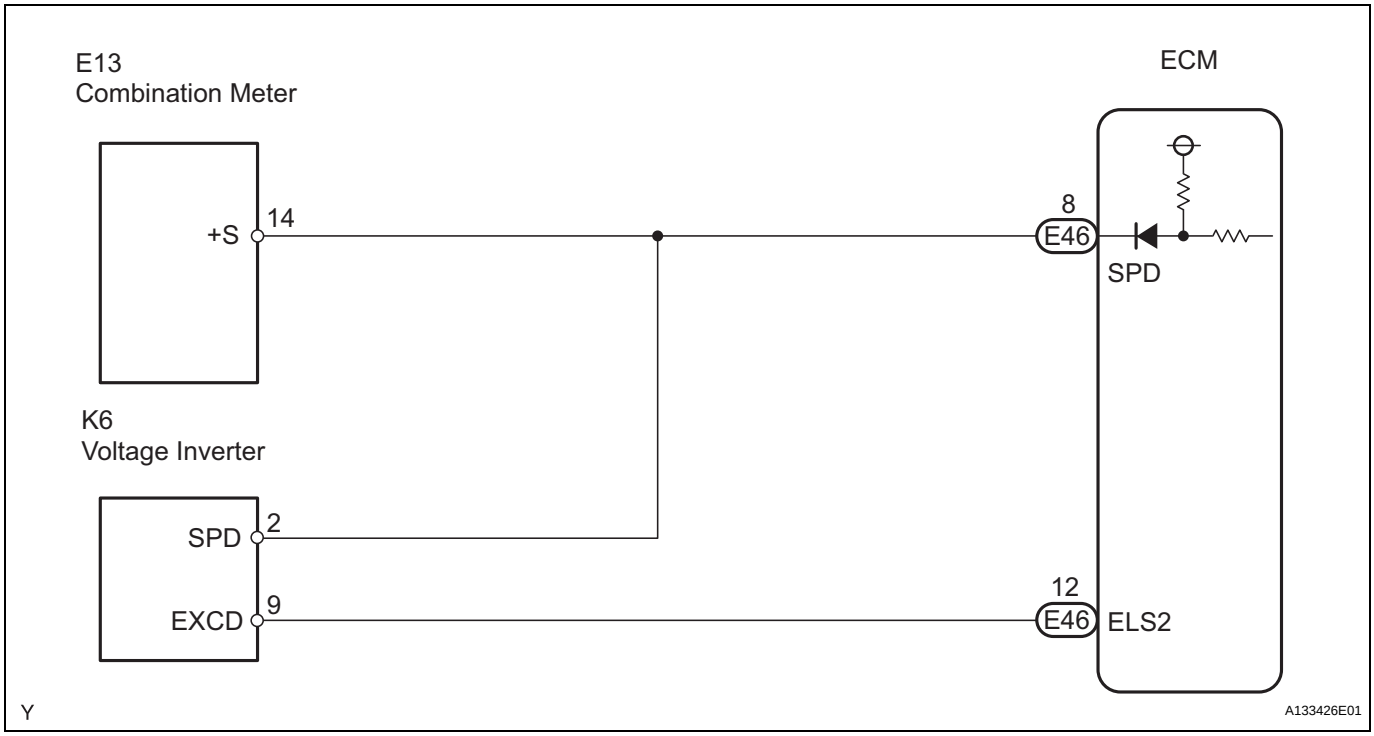

INSPECTION PROCEDURE

1	CHECK ANY OTHER DTCS OUTPUT (IN ADDITION TO DTC P1500)

(a) Connect an intelligent tester to the DLC3.
(b) Turn the ignition switch ON and turn the tester ON.
(c) Select the following menu items: DIAGNOSIS / ENHANCED OBD II / DTC INFO / CURRENT CODES.
(d) Read DTCs.

Result

Display (DTC Output)	Proceed To
P1500	A
P1500 and other DTCs	B

ES

HINT:
If any DTCs other than P1500 are output, troubleshoot those DTCs first.

NG → **GO TO DTC CHART (See page ES-57)**

OK

2	INSPECT VOLTAGE INVERTER ASSEMBLY (SPD SIGNAL)

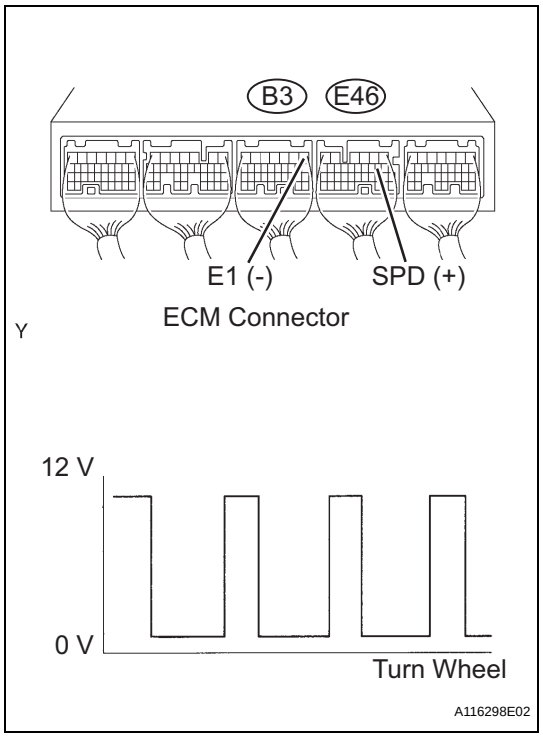

(a) Shift the transmission gear selector lever to the neutral position.
(b) Jack up the vehicle.
(c) Turn the ignition switch ON.
(d) Check the voltage between the terminals of the ECM connectors as the wheel is turned slowly.

Standard Voltage

Tester Connections	Specified Conditions
SPD (E46-8) - E1 (B3-1)	Voltage generated intermittently

HINT:
The output voltage should fluctuate up and down similarly to the diagram on the left when the wheel is turned slowly.

NG → **REPAIR OR REPLACE HARNESS OR CONNECTOR**

OK

3 INSPECT ECM

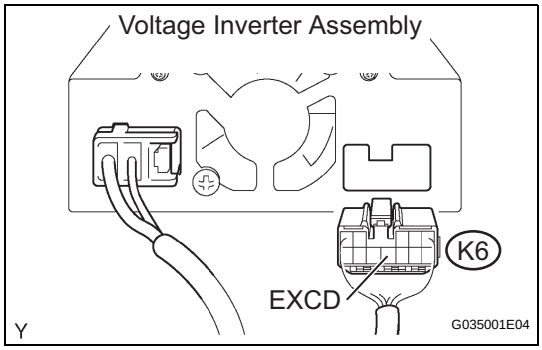

(a) Disconnect the K6 inverter connector.
(b) Start the engine.
(c) Measure the voltage between the OUT terminal of inverter and the body ground.
Standard Voltage

Tester Connections	Specified Conditions
EXCD (K6-9) - Body ground	1 V or less

(d) Reconnect the inverter connector.

OK → **REPLACE VOLTAGE INVERTER ASSEMBLY (See page OT-17)**

NG

4 CHECK HARNESS AND CONNECTOR (ECM - INVERTER, INVERTER - POWER SOURCE)

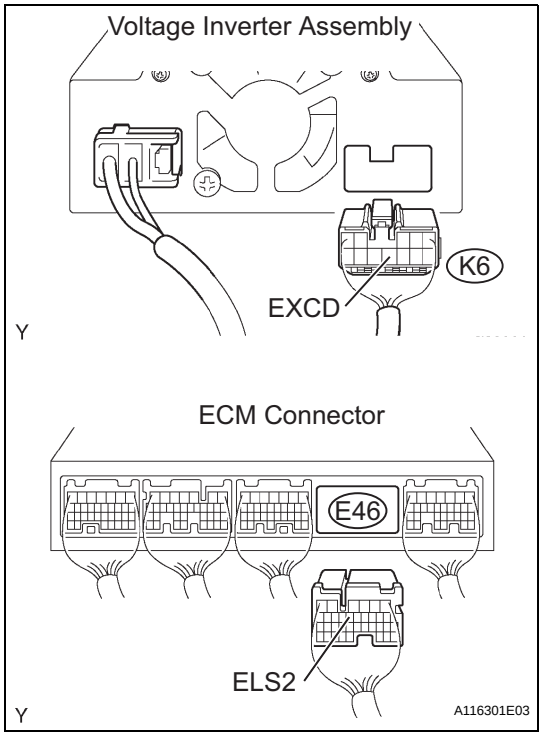

(a) Disconnect the K6 inverter connector.
(b) Disconnect the E46 ECM connector.
(c) Turn the ignition switch ON.
(d) Measure the voltage between the terminals of the wire harness side connectors and body ground.
Standard Voltage (Check for short in idling up signal circuit)

Tester Connections	Specified Conditions
EXCD (K6-9) - Body ground	1 V or less
ELS2 (E46-12) - Body ground	

(e) Reconnect the inverter connector and the ECM connector.

NG → **REPAIR OR REPLACE HARNESS OR CONNECTOR**

OK

REPLACE ECM (See page ES-446)

DTC	P2102	Throttle Actuator Control Motor Circuit Low

DTC	P2103	Throttle Actuator Control Motor Circuit High

DESCRIPTION

The throttle actuator is operated by the ECM and opens and closes the throttle valve using gears.
The opening angle of the throttle valve is detected by the Throttle Position (TP) sensor, which is mounted on the throttle body. The TP sensor provides feedback to the ECM. This feedback allows the ECM to appropriately control the throttle actuator and monitor the throttle opening angle as the ECM responds to driver inputs.
HINT:
This ETCS (Electronic Throttle Control System) does not use a throttle cable.

DTC No.	DTC Detection Conditions	Trouble Areas
P2102	Conditions (a) and (b) continue for 2.0 seconds (1 trip detection logic) (a) Throttle actuator duty ratio 80 % or more (b) Throttle actuator current 0.5 A or less	• Open in throttle actuator circuit • Throttle actuator • ECM
P2103	Throttle actuator current 7 A or more for 0.6 seconds (1 trip detection logic)	• Short in throttle actuator circuit • Throttle actuator • Throttle valve • Throttle body assembly • ECM

MONITOR DESCRIPTION

The ECM monitors the electrical current through the electronic actuator, and detects malfunctions and open circuits in the throttle actuator based on this value. If the current is outside the standard range, the ECM determines that there is a malfunction in the throttle actuator. In addition, if the throttle valve does not function properly (for example, stuck on), the ECM determines that there is a malfunction. The ECM then illuminates the MIL and sets a DTC.
Example:
When the electrical current is more than 7 A, or less than 0.5 A and the throttle actuator duty ratio exceeds 80 %, the ECM interprets this as the current being outside the standard range, and illuminates the MIL and sets a DTC.
If the malfunction is not repaired successfully, a DTC is set when the engine is quickly revved to a high rpm several times after the engine has idled for 5 seconds after engine start.

MONITOR STRATEGY

Related DTCs	P2102: Throttle actuator current (low current) P2103: Throttle actuator current (high current)
Required Sensors/Components (Main)	Throttle actuator (throttle body)
Required Sensors/Components (Related)	None
Frequency of Operation	Continuous
Duration	P2102: 2 seconds P2103: 0.6 seconds
MIL Operation	Immediate
Sequence of Operation	None

TYPICAL ENABLING CONDITIONS

Monitor runs whenever following DTCs not present	None

P2102:

Electronic throttle actuator	ON

Electronic throttle actuator drive duty	80 % or more
Electronic throttle actuator power supply voltage	8 V or more
Motor current change during latest 0.016 seconds	Less than 0.2 A

P2103:

Electronic throttle actuator	ON
Either of the following conditions 1 or 2 met:	-
1. Electronic throttle actuator power supply voltage	8 V or more
2. Electronic throttle actuator power	ON
Battery voltage	8 V or more
Starter	OFF

ES

TYPICAL MALFUNCTION THRESHOLDS

P2102:

Motor current	Less than 0.5 A

P2103:

Hybrid IC diagnosis signal	Fail
Hybrid IC current limiter port	Fail

FAIL-SAFE

When either of these DTCs, as well as other DTCs relating to ETCS (Electronic Throttle Control System) malfunctions, is set, the ECM enters fail-safe mode. During fail-safe mode, the ECM cuts the current to the throttle actuator off, and the throttle valve is returned to a 6° throttle angle by the return spring. The ECM then adjusts the engine output by controlling the fuel injection (intermittent fuel-cut) and ignition timing, in accordance with the accelerator pedal opening angle, to allow the vehicle to continue at a minimal speed. If the accelerator pedal is depressed firmly and gently, the vehicle can be driven slowly. Fail-safe mode continues until a pass condition is detected, and the ignition switch is then turned OFF.

WIRING DIAGRAM

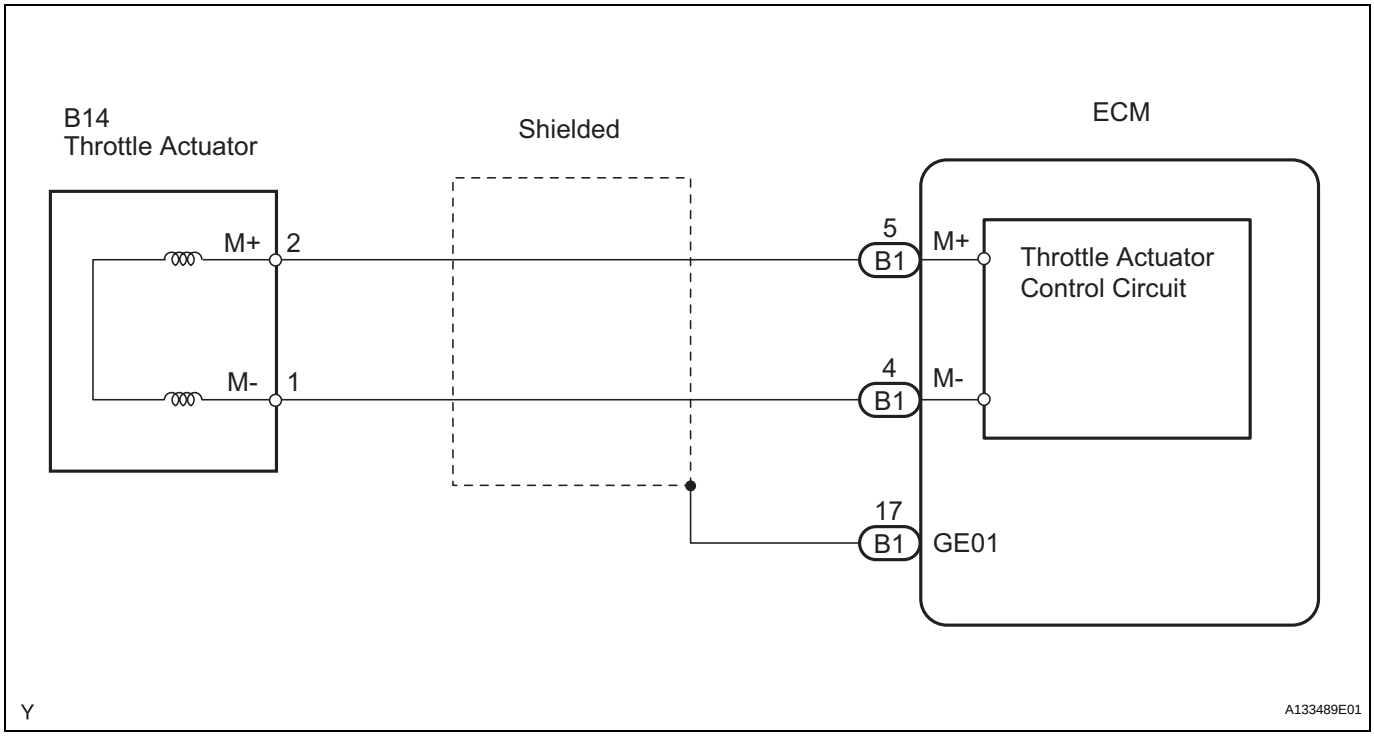

INSPECTION PROCEDURE

HINT:

- Read freeze frame data using an intelligent tester. Freeze frame data record the engine condition when malfunctions are detected. When troubleshooting, freeze frame data can help determine if the vehicle was moving or stationary, if the engine was warmed up or not, if the air-fuel ratio was lean or rich, and other data, from the time the malfunction occurred.
- The throttle actuator current (THROTTLE MOT) and the throttle actuator duty ratio (THROTTLE OPN / THROTTLE CLS) can be read using an intelligent tester. However the ECM shuts off the throttle actuator current when the ETCS malfunctions.

1 **INSPECT THROTTLE WITH MOTOR BODY ASSEMBLY (RESISTANCE OF THROTTLE CONTROL MOTOR)**

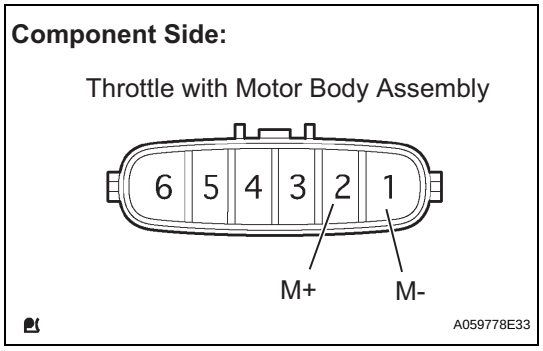

(a) Disconnect the B14 throttle with motor body connector.
(b) Measure the resistance between the terminals of the throttle control motor.

Standard Resistance

Tester Connections	Specified Conditions
M+ (2) - M- (1)	0.3 to 100 Ω at 20°C (68°F)

(c) Reconnect the throttle with motor body connector.

NG → **REPLACE THROTTLE WITH MOTOR BODY ASSEMBLY (See page ES-428)**

OK

2 **CHECK HARNESS AND CONNECTOR (THROTTLE CONTROL MOTOR - ECM)**

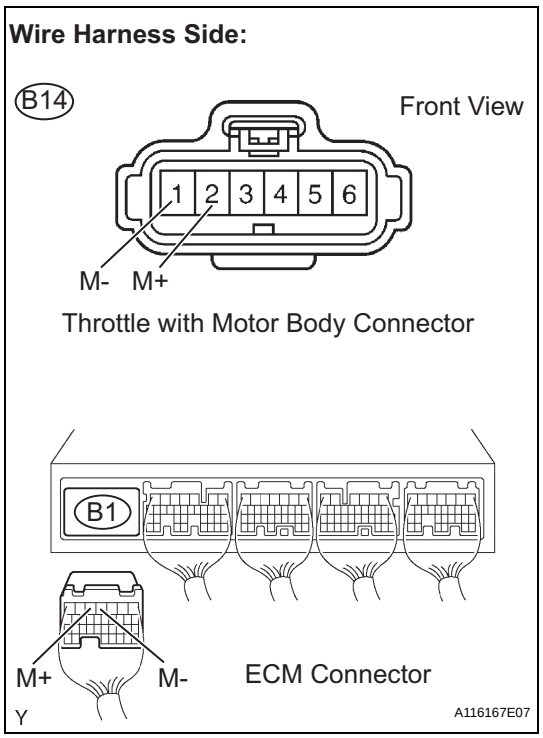

(a) Disconnect the B14 throttle with motor body connector.
(b) Disconnect the B1 ECM connector.
(c) Check the resistance.

Standard Resistance (Check for open)

Tester Connections	Specified Conditions
M+ (B14-2) - M+ (B1-5)	Below 1 Ω
M- (B14-1) - M- (B1-4)	

Standard Resistance (Check for short)

Tester Connections	Specified Conditions
M+ (B14-2) or M+ (B1-5) - Body ground	10 kΩ or higher
M- (B14-1) or M- (B1-4) - Body ground	

(d) Reconnect the throttle with motor body connector.
(e) Reconnect the ECM connector.

NG → **REPAIR OR REPLACE HARNESS OR CONNECTOR**

OK

3	INSPECT THROTTLE WITH MOTOR BODY ASSEMBLY

(a) Check for foreign objects between the throttle valve and the housing.
OK:
No foreign objects between throttle valve and housing.

NG → **REMOVE FOREIGN OBJECT AND CLEAN THROTTLE BODY**

OK

ES

4	INSPECT THROTTLE VALVE

(a) Check if the throttle valve opens and closes smoothly.
OK:
Throttle valve opens and closes smoothly.

NG → **REPLACE THROTTLE WITH MOTOR BODY ASSEMBLY (See page ES-428)**

OK

REPLACE ECM (See page ES-446)

DTC	P2111	Throttle Actuator Control System - Stuck Open

DTC	P2112	Throttle Actuator Control System - Stuck Closed

DESCRIPTION

The throttle actuator is operated by the ECM, and opens and closes the throttle valve using gears. The opening angle of the throttle valve is detected by the Throttle Position (TP) sensor, which is mounted on the throttle body. The TP sensor provides feedback to the ECM in order that it can control the throttle actuator, and therefore the throttle valve, appropriately in response to driver inputs.
HINT:
This ETCS (Electronic Throttle Control System) does not use a throttle cable.

DTC No.	DTC Detection Conditions	Trouble Areas
P2111	ECM signals throttle actuator to close, but stuck (1 trip detection logic)	• Throttle actuator • Throttle body assembly • Throttle valve
P2112	ECM signals throttle actuator to open, but stuck (1 trip detection logic)	

MONITOR DESCRIPTION

The ECM determines that there is a malfunction in the ETCS when the throttle valve remains at a fixed angle despite a high drive current from the ECM. The ECM illuminates the MIL and sets a DTC.
If the malfunction is not repaired successfully, a DTC is set when the accelerator pedal is fully depressed and released quickly (to fully open and close the throttle valve) after the engine is next started.

MONITOR STRATEGY

Related DTCs	P2111: Throttle actuator stuck open P2112: Throttle actuator stuck closed
Required Sensors/Components (Main)	Throttle actuator
Required Sensors/Components (Related)	-
Frequency of Operation	Continuous
Duration	0.5 seconds
MIL Operation	Immediate
Sequence of Operation	None

TYPICAL ENABLING CONDITIONS

ALL:

Monitor runs whenever following DTCs not present	None

P2111 (Throttle actuator stuck open):

All of following conditions met	-
System guard*	ON
Throttle motor current	2 A or more
Throttle motor close duty	80 % or more

P2112 (Throttle actuator stuck closed):

All of following conditions met	-
System guard*	ON
Throttle motor current	2 A or more
Throttle motor open duty	80 % or more
* System guard set when following conditions met	-

Throttle motor	ON
Motor duty calculation	Executing
TPS fail determination	Fail determined
Motor current-cut operation	Not executing
Actuator power supply voltage	4 V or more
Motor fail determination	Fail determined

TYPICAL MALFUNCTION THRESHOLDS

P2111 (Throttle actuator stuck open):

TP sensor voltage change for 0.016 seconds	Less than 0.1 V for 0.5 seconds or more

P2112 (Throttle actuator stuck closed):

TP sensor voltage change for 0.016 seconds	Less than 0.1 V for 0.5 seconds or more

FAIL-SAFE

When either of these DTCs, as well as other DTCs relating to ETCS (Electronic Throttle Control System) malfunctions, is set, the ECM enters fail-safe mode. During fail-safe mode, the ECM cuts the current to the throttle actuator off, and the throttle valve is returned to a 6° throttle angle by the return spring. The ECM then adjusts the engine output by controlling the fuel injection (intermittent fuel-cut) and ignition timing, in accordance with the accelerator pedal opening angle, to allow the vehicle to continue at a minimal speed.
If the accelerator pedal is depressed firmly and gently, the vehicle can be driven slowly.
Fail-safe mode continues until a pass condition is detected, and the ignition switch is then turned OFF.

WIRING DIAGRAM

Refer to DTC P2102 (See page ES-283).

INSPECTION PROCEDURE

HINT:
Read freeze frame data using an intelligent tester. Freeze frame data record the engine condition when malfunctions are detected. When troubleshooting, freeze frame data can help determine if the vehicle was moving or stationary, if the engine was warmed up or not, if the air-fuel ratio was lean or rich, and other data, from the time the malfunction occurred.

1	CHECK ANY OTHER DTCS OUTPUT (IN ADDITION TO DTC P2111 OR P2112)

(a) Connect an intelligent tester to the DLC3.
(b) Turn the ignition switch ON.
(c) Turn the tester ON.
(d) Select the following menu items: DIAGNOSIS / ENHANCED OBD II / DTC INFO / CURRENT CODES.
(e) Read DTCs.

Result

Display (DTC Output)	Proceed To
P2111 or P2112	A
P2111 or P2112 and other DTCs	B

HINT:
If any DTCs other than P2111 or P2112 are output, troubleshoot those DTCs first.

B → GO TO DTC CHART (See page ES-57)

A

2	INSPECT THROTTLE WITH MOTOR BODY ASSEMBLY (VISUALLY CHECK THROTTLE VALVE)

(a) Check for contamination between the throttle valve and the housing. If necessary, clean the throttle body. And check that the throttle valve moves smoothly.

OK:

Throttle valve is not contaminated with foreign objects and moves smoothly.

NG → REPLACE THROTTLE WITH MOTOR BODY ASSEMBLY (See page ES-428)

OK

3	CHECK WHETHER DTC OUTPUT RECURS (DTC P2111 OR P2112)

(a) Connect an intelligent tester to the DLC3.
(b) Turn the ignition switch ON.
(c) Turn the tester ON.
(d) Clear DTCs (See page ES-38).
(e) Start the engine, and fully depress and release the accelerator pedal quickly (to fully open and close the throttle valve).
(f) Select the following menu items: DIAGNOSIS / ENHANCED OBD II / DTC INFO / CURRENT CODES.
(g) Read DTCs.

Result

Display (DTC Output)	Proceed To
No DTC	A
P2111 or P2112	B

B → REPLACE THROTTLE WITH MOTOR BODY ASSEMBLY (See page ES-428)

A

CHECK FOR INTERMITTENT PROBLEMS

DTC	P2118	Throttle Actuator Control Motor Current Range / Performance

DESCRIPTION

The ETCS (Electronic Throttle Control System) has a dedicated power supply circuit. The voltage (+BM) is monitored and when it is low (less than 4 V), the ECM determines that there is a malfunction in the ETCS and cuts off the current to the throttle actuator.
When the voltage becomes unstable, the ETCS itself becomes unstable. For this reason, when the voltage is low, the current to the throttle actuator is cut. If repairs are made and the system returns to normal, turn the ignition switch OFF. The ECM then allows the current to flow to the throttle actuator so that it can be restarted.

HINT:
The ETCS does not use a throttle cable.

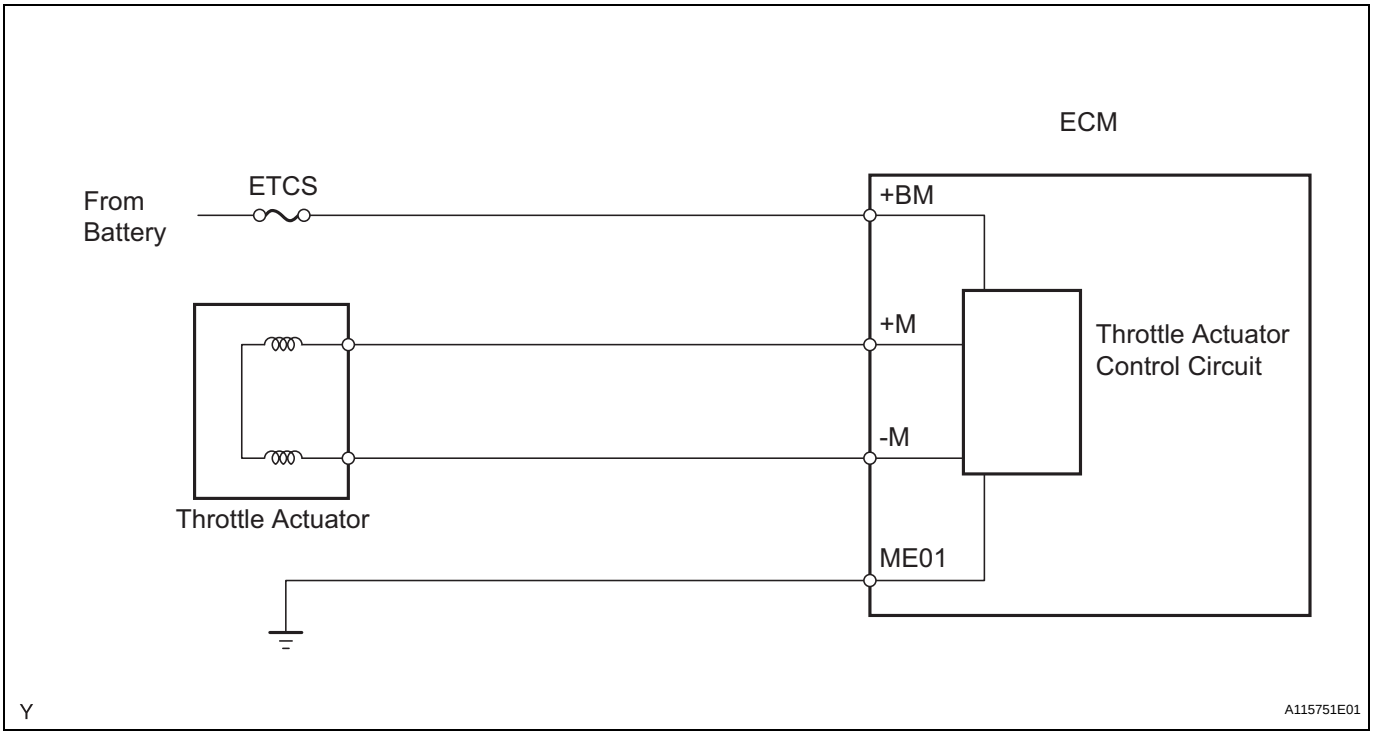

DTC No.	DTC Detection Conditions	Trouble Areas
P2118	Open in ETCS power source (+BM) circuit (1 trip detection logic)	• Open in ETCS power source circuit • ETCS fuse • ECM

MONITOR DESCRIPTION

The ECM monitors the battery supply voltage applied to the throttle actuator.
When the power supply voltage (+BM) drops to below 4 V for 0.8 seconds or more, the ECM interprets this as an open in the power supply circuit (+BM). The ECM illuminates the MIL and sets the DTC.
If the malfunction is not repaired successfully, the DTC is set 5 seconds after the engine is next started.

MONITOR STRATEGY

Related DTCs	P2118: Throttle actuator power supply
Required Sensors/Components (Main)	Throttle actuator, throttle valve, ETCS fuse
Required Sensors/Components (Related)	None
Frequency of Operation	Continuous
Duration	0.8 seconds

MIL Operation	Immediate
Sequence of Operation	None

TYPICAL ENABLING CONDITIONS

Monitor runs whenever following DTCs not present	None
Electronic throttle actuator power	ON
Battery voltage	8 V or more

TYPICAL MALFUNCTION THRESHOLDS

Electronic throttle actuator power supply voltage (+BM)	Less than 4 V

ES

COMPONENT OPERATING RANGE

Throttle actuator power supply voltage	11 to 14 V

FAIL-SAFE

When this DTC, as well as other DTCs relating to ETCS (Electronic Throttle Control System) malfunctions, is set, the ECM enters fail-safe mode. During fail-safe mode, the ECM cuts the current to the throttle actuator off, and the throttle valve is returned to a 6° throttle angle by the return spring. The ECM then adjusts the engine output by controlling the fuel injection (intermittent fuel-cut) and ignition timing, in accordance with the accelerator pedal opening angle, to allow the vehicle to continue at a minimal speed. If the accelerator pedal is depressed firmly and gently, the vehicle can be driven slowly. Fail-safe mode continues until a pass condition is detected, and the ignition switch is then turned OFF.

WIRING DIAGRAM

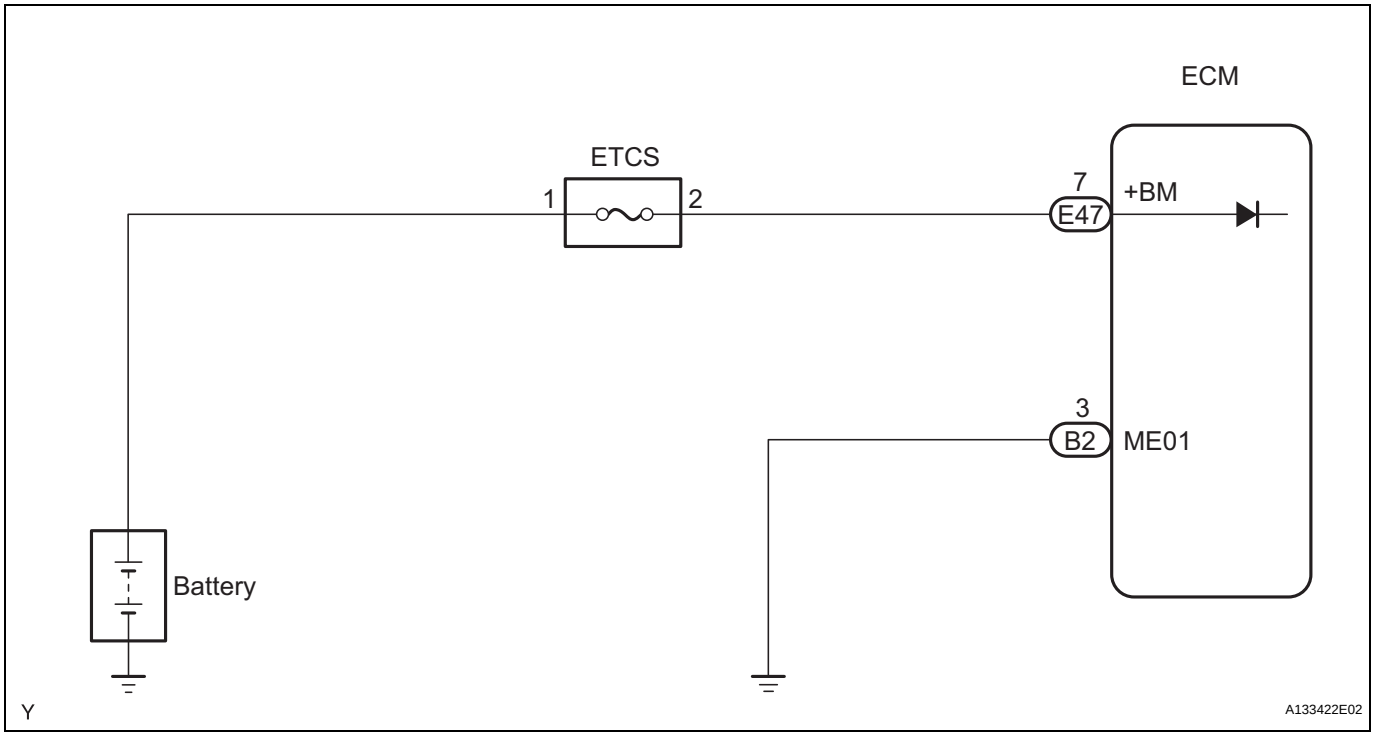

INSPECTION PROCEDURE

HINT:
Read freeze frame data using an intelligent tester. Freeze frame data record the engine condition when malfunctions are detected. When troubleshooting, freeze frame data can help determine if the vehicle was moving or stationary, if the engine was warmed up or not, if the air-fuel ratio was lean or rich, and other data, from the time the malfunction occurred.

1 CHECK FUSE (ETCS FUSE)

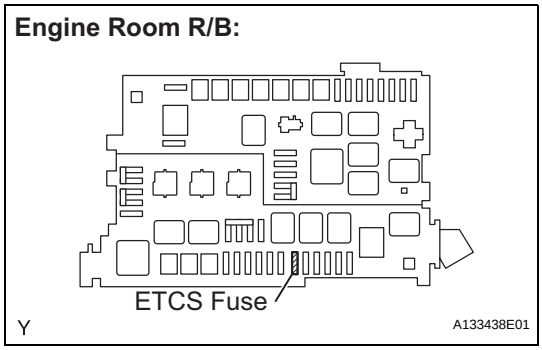

(a) Remove the ETCS fuse from the engine room R/B.
(b) Check the ETCS fuse resistance.
Standard resistance:
Below 1 Ω
(c) Reinstall the ETCS fuse.

NG → **CHECK FOR SHORT IN ALL HARNESSES AND CONNECTORS CONNECTED TO FUSE AND REPLACE FUSE**

OK

2 INSPECT ECM (+BM VOLTAGE)

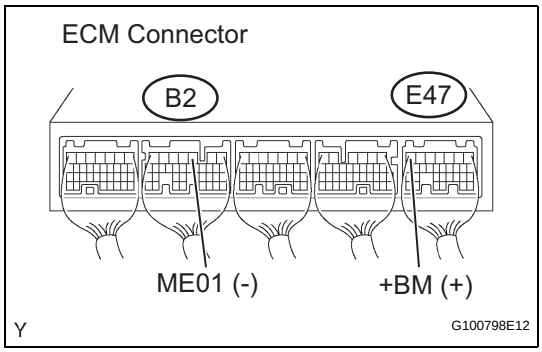

(a) Measure the voltage between the terminals of the B2 and E47 ECM connectors.
Standard Voltage

Tester Connections	Specified Conditions
+BM (E47-7) - ME01 (B2-3)	11 to 14 V

OK → **CHECK FOR INTERMITTENT PROBLEMS**

NG

3	CHECK HARNESS AND CONNECTOR (ECM - ETCS FUSE, ETCS FUSE - BATTERY)

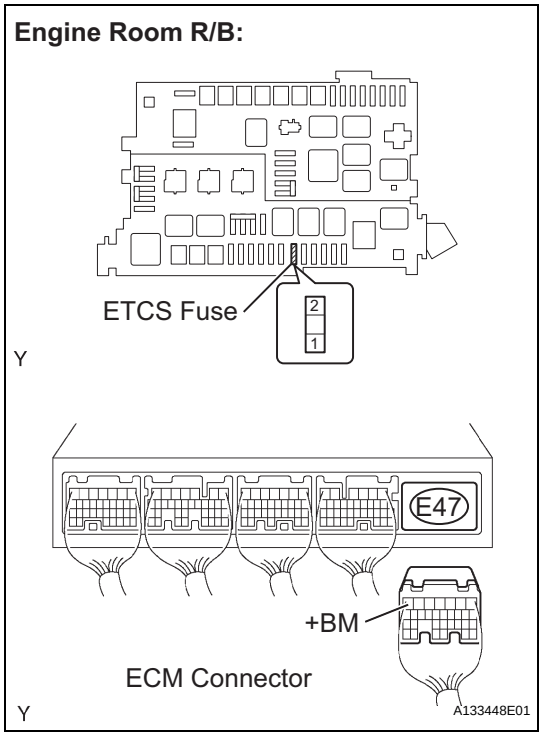

(a) Check the harness and connector between the ETCS fuse and ECM.
(1) Remove the ETCS fuse from the engine room R/B.
(2) Disconnect the E47 ECM connector.
(3) Check the resistance.

Standard Resistance (Check for open)

Tester Connections	Specified Conditions
ETCS fuse (2) - +BM (E47-7)	Below 1 Ω

Standard Resistance (Check for short)

Tester Connections	Specified Conditions
ETCS fuse (2) or +BM (E47-7) - Body ground	10 kΩ or higher

(4) Reinstall the ETCS fuse.
(5) Reconnect the ECM connector.

(b) Check the harness and connector between the ETCS fuse and positive battery cable.
(1) Remove the ETCS fuse from the engine room R/B.
(2) Disconnect the positive battery cable.
(3) Check the resistance.

Standard Resistance (Check for open)

Tester Connections	Specified Conditions
Positive battery cable - ETCS fuse (1)	Below 1 Ω

Standard Resistance (Check for short)

Tester Connections	Specified Conditions
Positive battery cable or ETCS fuse (1) - Body ground	10 kΩ or higher

(4) Reinstall the ETCS fuse.
(5) Reconnect the positive battery cable.

NG → **REPAIR OR REPLACE HARNESS OR CONNECTOR**

OK

REPLACE ECM (See page ES-446)

ES

DTC	P2119	Throttle Actuator Control Throttle Body Range / Performance

DESCRIPTION

The Electronic Throttle Control System (ETCS) is composed of the throttle actuator, Throttle Position (TP) sensor, Accelerator Pedal Position (APP) sensor, and ECM. The ECM operates the throttle actuator to regulate the throttle valve in response to driver inputs. The TP sensor detects the opening angle of the throttle valve, and provides the ECM with feedback so that the throttle valve can be appropriately controlled by the ECM.

DTC No.	DTC Detection Conditions	Trouble Areas
P2119	Throttle valve opening angle continues to vary greatly from target opening angle (1 trip detection logic)	• ETCS • ECM

ES

MONITOR DESCRIPTION

The ECM determines the actual opening angle of the throttle valve from the TP sensor signal. The actual opening angle is compared to the target opening angle commanded by the ECM. If the difference between these two values is outside the standard range, the ECM interprets this as a malfunction in the ETCS. The ECM then illuminates the MIL and sets the DTC.
If the malfunction is not repaired successfully, the DTC is set when the accelerator pedal is quickly released (to close the throttle valve) after the engine speed reaches 5,000 rpm by the accelerator pedal being fully depressed (fully open the throttle valve).

MONITOR STRATEGY

Related DTCs	P2119: ETCS malfunction
Required Sensors/Components (Main)	Throttle actuator
Required Sensors/Components (Related)	-
Frequency of Operation	Continuous
Duration	1 second
MIL Operation	Immediate
Sequence of Operation	None

TYPICAL ENABLING CONDITIONS

Monitor runs whenever following DTCs not present	None
System guard*	ON
*System guard set when following conditions met	-
Throttle motor	ON
Motor duty calculation	Executing
TPS fail determination	Fail determined
Motor current-cut operation	Not executing
Actuator power supply	4 V or more
Motor fail determination	Fail determined

TYPICAL MALFUNCTION THRESHOLDS

Either of following conditions A or B met	-
A. Commanded closed TP - current closed TP	0.3 V or more for 1 second
B. Commanded open TP - current open TP	0.3 V or more for 0.6 seconds

FAIL-SAFE

When this DTC, as well as other DTCs relating to ETCS (Electronic Throttle Control System) malfunctions, is set, the ECM enters fail-safe mode. During fail-safe mode, the ECM cuts the current to the throttle actuator off, and the throttle valve is returned to a 6° throttle angle by the return spring. The ECM then adjusts the engine output by controlling the fuel injection (intermittent fuel-cut) and ignition timing, in accordance with the accelerator pedal opening angle, to allow the vehicle to continue at a minimal speed. If the accelerator pedal is depressed firmly and gently, the vehicle can be driven slowly. Fail-safe mode continues until a pass condition is detected, and the ignition switch is then turned OFF.

WIRING DIAGRAM

Refer to DTC P2102 (See page ES-283).

INSPECTION PROCEDURE

ES

HINT:

Read freeze frame data using an intelligent tester. Freeze frame data record the engine condition when malfunctions are detected. When troubleshooting, freeze frame data can help determine if the vehicle was moving or stationary, if the engine was warmed up or not, if the air-fuel ratio was lean or rich, and other data, from the time the malfunction occurred.

1	CHECK ANY OTHER DTCS OUTPUT (IN ADDITION TO DTC P2119)

(a) Connect an intelligent tester to the DLC3.
(b) Turn the ignition switch ON.
(c) Turn the tester ON.
(d) Select the following menu items: DIAGNOSIS / ENHANCED OBD II / DTC INFO / CURRENT CODES.
(e) Read DTCs.

Result

Display (DTC Output)	Proceed To
P2119	A
P2119 and other DTCs	B

HINT:

If any DTCs other than P2119 are output, troubleshoot those DTCs first.

B → GO TO DTC CHART (See page ES-57)

A

2	CHECK WHETHER DTC OUTPUT RECURS (DTC P2119)

(a) Connect an intelligent tester to the DLC3.
(b) Turn the ignition switch ON.
(c) Turn the tester ON.
(d) Clear DTCs (See page ES-38).
(e) Allow the engine to idle for 15 seconds.

CAUTION:

Exercise extreme care and take precautions at steps (f) and (g) below. Failure to do so may result in the vehicle unexpectedly rolling away.

(f) Securely apply the parking brake and move the gear selector lever to the D position.

(g) While depressing the brake pedal securely, fully depress the accelerator pedal for 5 seconds.
(h) Select the following menu items: DIAGNOSIS / ENHANCED OBD II / DTC INFO / CURRENT CODES.
(i) Read DTCs.
HINT:
The voltage output of the throttle position sensor can be checked during step (g) using an intelligent tester. Variations in the voltage output indicate that the throttle actuator is in operation. To check the voltage output using an intelligent tester, select the following menu items: DIAGNOSIS / ENHANCED OBD II / DATA LIST / PRIMARY / THROTTLE POS #1.
OK:
No DTC output.

NG → **REPLACE THROTTLE WITH MOTOR BODY ASSEMBLY (See page ES-428)**

OK

CHECK FOR INTERMITTENT PROBLEMS

DTC	P2120	Throttle / Pedal Position Sensor / Switch "D" Circuit
DTC	P2122	Throttle / Pedal Position Sensor / Switch "D" Circuit Low Input
DTC	P2123	Throttle / Pedal Position Sensor / Switch "D" Circuit High Input
DTC	P2125	Throttle / Pedal Position Sensor / Switch "E" Circuit
DTC	P2127	Throttle / Pedal Position Sensor / Switch "E" Circuit Low Input
DTC	P2128	Throttle / Pedal Position Sensor / Switch "E" Circuit High Input
DTC	P2138	Throttle / Pedal Position Sensor / Switch "D" / "E" Voltage Correlation

HINT:
These DTCs relate to the Accelerator Pedal Position (APP) sensor.

DESCRIPTION

HINT:
This ETCS (Electronic Throttle Control System) does not use a throttle cable.
The Accelerator Pedal Position (APP) sensor is mounted on the accelerator pedal bracket and has 2 sensor circuits: VPA (main) and VPA2 (sub). This sensor is a non-contact type, and uses Hall-effect elements, in order to yield accurate signals, even in extreme driving conditions, such as at high speeds as well as very low speeds. The voltage, which is applied to terminals VPA and VPA2 of the ECM, varies between 0 V and 5 V in proportion to the operating angle of the accelerator pedal (throttle valve). A signal from VPA indicates the actual accelerator pedal opening angle (throttle valve opening angle) and is used for engine control. A signal from VPA2 conveys the status of the VPA circuit and is used to check the APP sensor itself.
The ECM monitors the actual accelerator pedal opening angle (throttle valve opening angle) through the signals from VPA and VPA2, and controls the throttle actuator according to these signals.

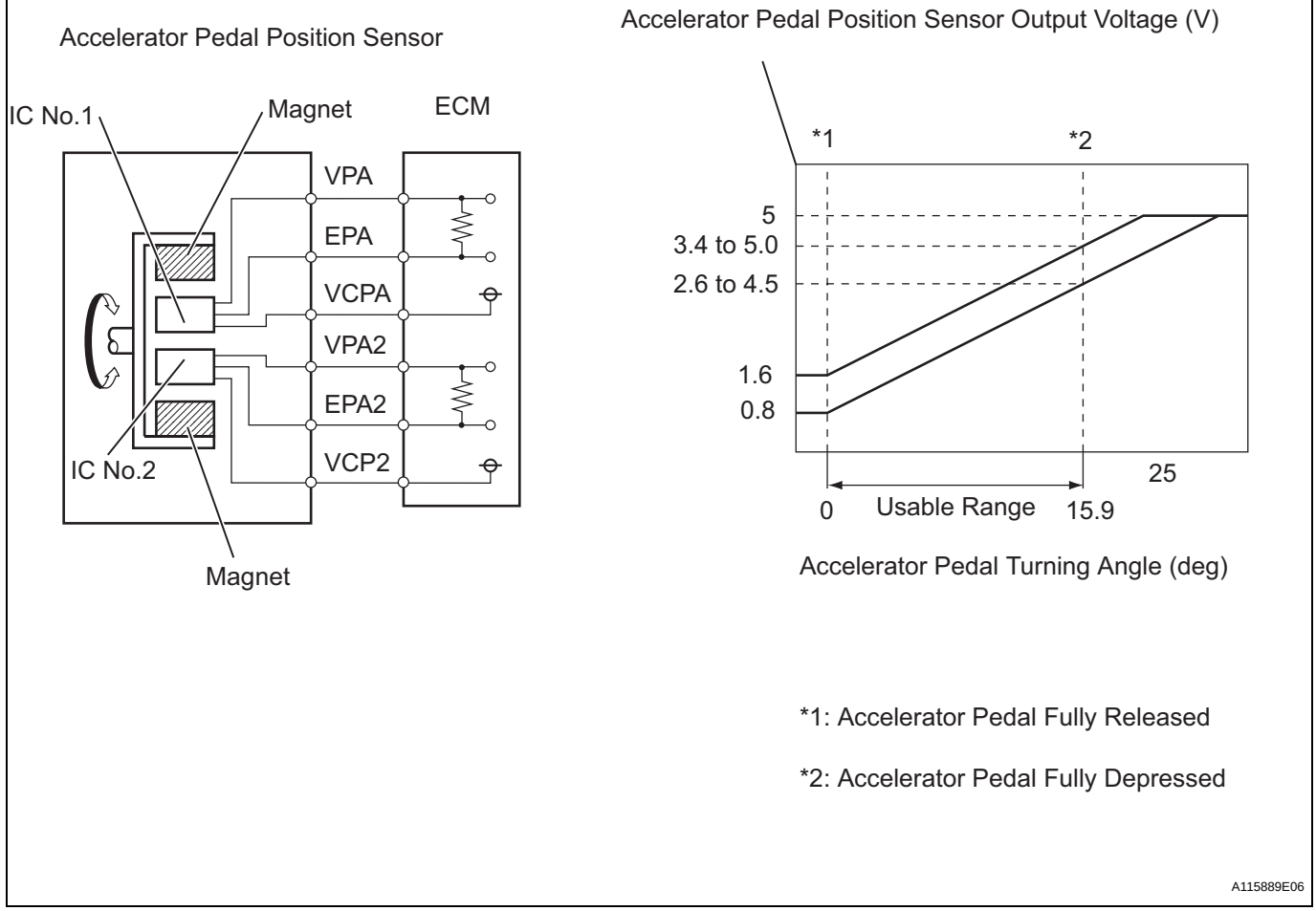

DTC No.	DTC Detection Conditions	Trouble Areas
P2120	VPA fluctuates rapidly beyond upper and lower malfunction thresholds for 0.5 seconds or more (1 trip detection logic)	• Accelerator Pedal Position (APP) sensor • ECM
P2122	VPA 0.4 V or less for 0.5 seconds or more when accelerator pedal fully released (1 trip detection logic)	• APP sensor • Open in VCP1 circuit • Open or ground short in VPA circuit • ECM
P2123	VPA 4.8 V or more for 2.0 seconds or more (1 trip detection logic)	• APP sensor • Open in EPA circuit • ECM
P2125	VPA2 fluctuates rapidly beyond upper and lower malfunction thresholds for 0.5 seconds or more (1 trip detection logic)	• APP sensor • ECM
P2127	VPA2 1.2 V or less for 0.5 seconds or more when accelerator pedal fully released (1 trip detection logic)	• APP sensor • Open in VCP2 circuit • Open or ground short in VPA2 circuit • ECM
P2128	Conditions (a) and (b) continue for 2.0 seconds or more (1 trip detection logic) (a) VPA2 4.8 V or more (b) VPA between 0.4 V and 3.45 V	• APP sensor • Open in EPA2 circuit • ECM
P2138	Condition (a) or (b) continues for 2.0 seconds or more (1 trip detection logic) (a) Difference between VPA and VPA2 0.02 V or less (b) VPA 0.4 V or less and VPA2 1.2 V or less	• Short between VPA and VPA2 circuits • APP sensor • ECM

HINT:
When any of these DTCs are set, check the APP sensor voltage by selecting the following menu items on an intelligent tester: DIAGNOSIS / ENHANCED OBD II / DATA LIST / PRIMARY / ACCEL POS #1 and ACCEL POS #2.

Trouble Areas	ACCEL POS #1 When Accelerator Pedal Released	ACCEL POS #2 When Accelerator Pedal Released	ACCEL POS #1 When Accelerator Pedal Depressed	ACCEL POS #2 When Accelerator Pedal Depressed
VCP circuit open	0 to 0.2 V	0 to 0.2 V	0 to 0.2 V	0 to 0.2 V
Open or ground short in VPA circuit	0 to 0.2 V	1.2 to 2.0 V	0 to 0.2 V	3.4 to 5.0 V
Open or ground short in VPA2 circuit	0.5 to 1.1 V	0 to 0.2 V	2.6 to 4.5 V	0 to 0.2 V
EPA circuit open	4.5 to 5.0 V	4.5 to 5.0 V	4.5 to 5.0 V	4.5 to 5.0 V
Normal condition	0.5 to 1.1 V	1.2 to 2.0 V	2.6 to 4.5 V	3.4 to 5.0 V

HINT:
Accelerator pedal positions are expressed as voltages.

ES

MONITOR DESCRIPTION

When either of the output voltages of VPA or VPA2 deviates from the standard range, or the difference between the output voltages of the 2 sensor circuits is less than the threshold, the ECM determines that there is a malfunction in the APP sensor. The ECM then illuminates the MIL and sets a DTC.
Example:
When the output voltage of VPA drops to below 0.4 V for more than 0.5 seconds when the accelerator pedal is fully depressed, DTC P2122 is set.
If the malfunction is not repaired successfully, a DTC is set 2 seconds after the engine is next started.

MONITOR STRATEGY

Related DTCs	P2120: Accelerator Pedal Position (APP) sensor 1 range check (fluctuating) P2122: APP sensor 1 range check (low voltage) P2123: APP sensor 1 range check (high voltage) P2125: APP sensor 2 range check (fluctuating) P2127: APP sensor 2 range check (low voltage) P2128: APP sensor 2 range check (high voltage) P2138: APP sensor range check (correlation)
Required Sensors/Components (Main)	APP sensor
Required Sensors/Components (Related)	-
Frequency of Operation	Continuous
Duration	0.5 seconds: P2120, P2122, P2125 and P2127 2.0 seconds: P2123, P2128 and P2138
MIL Operation	Immediate
Sequence of Operation	None

TYPICAL ENABLING CONDITIONS

Monitor runs whenever following DTCs not present	None
Ignition switch	ON
Electronic throttle actuator power	ON

TYPICAL MALFUNCTION THRESHOLDS

P2120:

Either of the following conditions is met:	Condition 1 or 2
1. VPA1 voltage when VPA2 voltage is 0.04 V or more	0.4 V or less
2. VPA1 voltage	4.8 V or more

P2122:

VPA1 voltage when VPA2 voltage is 0.04 V or more	0.4 V or less

P2123:

VPA1 voltage	4.8 V or more

P2125:

Either of the following conditions is met:	Condition 1 or 2
1. VPA2 voltage when VPA1 is 0.04 V or more	1.2 V or less
2. VPA2 voltage when VPA1 is 0.4 to 3.45 V	4.8 V or more

P2127:

VPA2 voltage when VPA1 0.04 V or more	1.2 V or less

P2128:

VPA2 voltage when VPA1 0.4 to 3.45 V	4.8 V or more

P2138:

Either of following conditions A or B met:	-
Condition A	-
Difference between VPA1 and VPA 2 voltages	0.02 V or less
Condition B	-
VPA1 voltage	0.4 V or less
VPA2 voltage	1.2 V or less

COMPONENT OPERATING RANGE

VPA1 voltage	0.5 V to 4.5 V
VPA2 voltage	1.2 V to 5.0 V

FAIL-SAFE

When any of DTCs P2120, P2121, P2122, P2123, P2125, P2127, P2128 and P2138 are set, the ECM enters fail-safe mode. If either of the 2 sensor circuits malfunctions, the ECM uses the remaining circuit to calculate the accelerator pedal position to allow the vehicle to continue driving. If both of the circuits malfunction, the ECM regards the accelerator pedal as being released. As a result, the throttle valve is closed and the engine idles.
Fail-safe mode continues until a pass condition is detected, and the ignition switch is turned OFF.

WIRING DIAGRAM

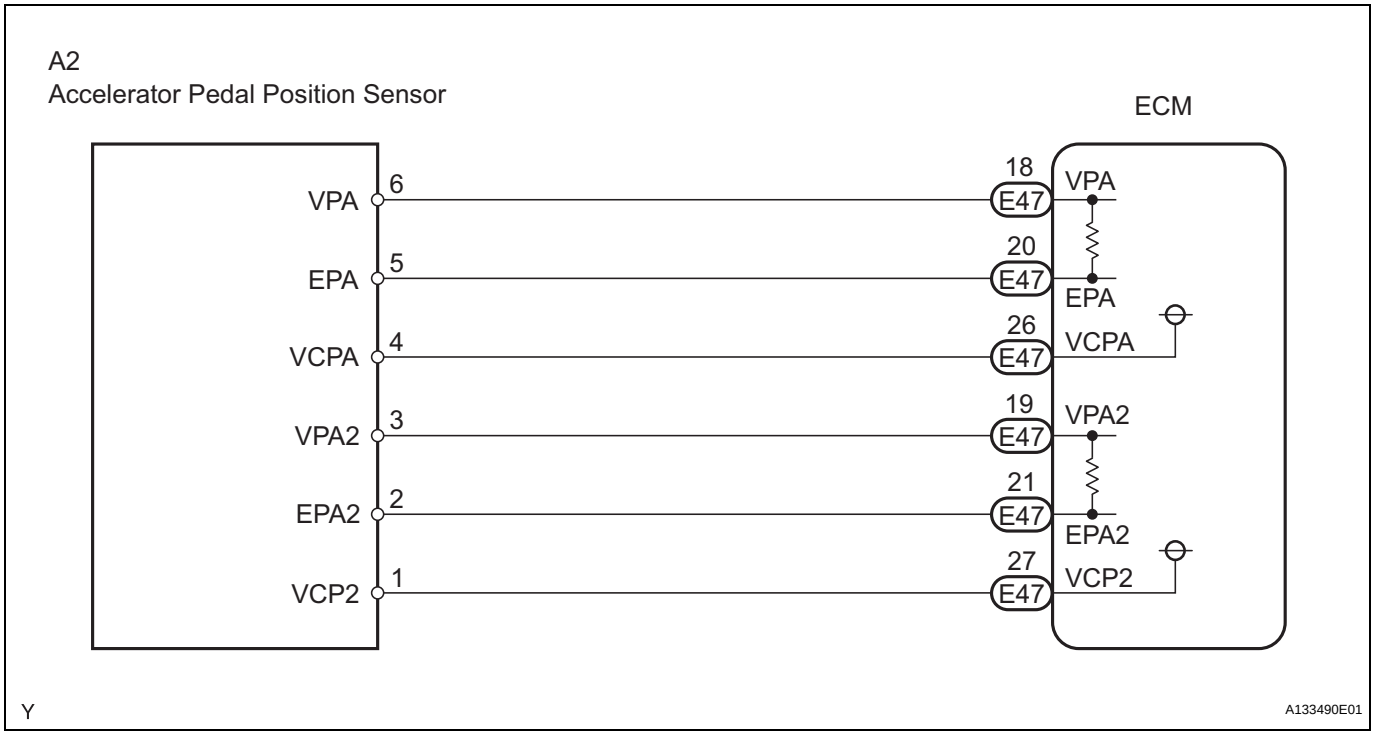

ES

INSPECTION PROCEDURE

HINT:

Read freeze frame data using an intelligent tester. Freeze frame data record the engine condition when malfunctions are detected. When troubleshooting, freeze frame data can help determine if the vehicle was moving or stationary, if the engine was warmed up or not, if the air-fuel ratio was lean or rich, and other data, from the time the malfunction occurred.

1	READ VALUE USING INTELLIGENT TESTER (ACCEL POS #1 AND ACCEL POS #2)

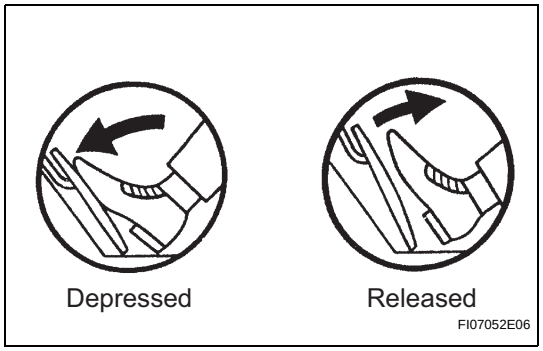

(a) Connect an intelligent tester to the DLC3.
(b) Turn the ignition switch ON and turn the tester ON.
(c) Select the following menu items: DIAGNOSIS / ENHANCED OBD II / DATA LIST / ETCS / ACCEL POS #1 and ACCEL POS #2.
(d) Read the value displayed on the tester.

Standard Voltage

Accelerator Pedal Operations	ACCEL POS #1	ACCEL POS #2
Released	0.5 to 1.1 V	1.2 to 2.0 V
Depressed	2.6 to 4.5 V	3.4 to 5.0 V

OK → **Go to step 5**

NG

2	CHECK HARNESS AND CONNECTOR (ACCELERATOR PEDAL POSITION SENSOR - ECM)

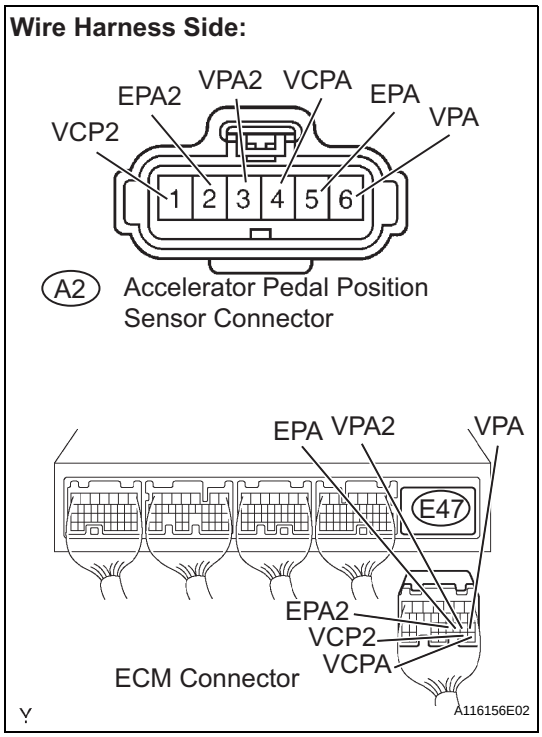

(a) Disconnect the A2 Accelerator Pedal Position (APP) sensor connector.
(b) Disconnect the E47 ECM connector.
(c) Check the resistance.

Standard Resistance (Check for open)

Tester Connections	Specified Conditions
VPA (A2-6) - VPA (E47-18)	Below 1 Ω
EPA (A2-5) - EPA (E47-20)	
VCPA (A2-4) - VCPA (E47-26)	
VPA2 (A2-3) - VPA2 (E47-19)	
EPA2 (A2-2) - EPA2 (E47-21)	
VCP2 (A2-1) - VCP2 (E47-27)	

Standard Resistance (Check for short)

Tester Connections	Specified Conditions
VPA (A2-6) or VPA (E47-18) - Body ground	10 kΩ or higher
EPA (A2-5) or EPA (E47-20) - Body ground	
VCPA (A2-4) or VCPA (E47-26) - Body ground	
VPA2 (A2-3) or VPA2 (E47-19) - Body ground	
EPA2 (A2-2) or EPA2 (E47-21) - Body ground	
VCP2 (A2-1) or VCP2 (E47-27) - Body ground	

(d) Reconnect the APP sensor connector.
(e) Reconnect the ECM connector.

NG → **REPAIR OR REPLACE HARNESS OR CONNECTOR**

OK

3 INSPECT ECM (VCPA AND VCP2 VOLTAGE)

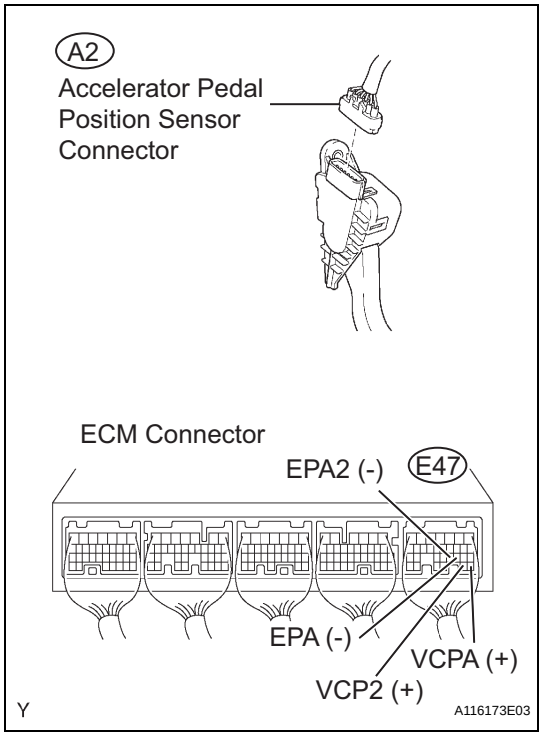

(a) Disconnect the A2 APP sensor connector.
(b) Turn the ignition switch ON.
(c) Measure the voltage between the terminals of the E47 ECM connector.

Standard Voltage

Tester Connections	Specified Conditions
VCPA (E47-26) - EPA (E47-20)	4.5 to 5.5 V
VCP2 (E47-27) - EPA2 (E47-21)	

(d) Reconnect the APP sensor connector.

ES

NG → **REPLACE ECM (See page ES-446)**

OK

4 REPLACE ACCELERATOR PEDAL ROD ASSEMBLY

Replace the accelerator pedal rod assembly (See page ES-449).

NEXT

5 CHECK WHETHER DTC OUTPUT RECURS (ACCELERATOR PEDAL POSITION SENSOR DTCS)

(a) Connect an intelligent tester to the DLC3.
(b) Turn the ignition switch ON and turn the tester ON.
(c) Clear DTCs (See page ES-38).
(d) Start the engine.
(e) Allow the engine to idle for 15 seconds.
(f) Select the following menu items: DIAGNOSIS / ENHANCED OBD II / DTC INFO / CURRENT CODES.
(g) Read DTCs.

Result

Display (DTC Output)	Proceed To
P2120, P2122, P2123, P2125, P2127, P2128 and/or P2138	A
No output	B

B → **SYSTEM OK**

A

REPLACE ECM (See page ES-446)

DTC	P2121	Throttle / Pedal Position Sensor / Switch "D" Circuit Range / Performance

HINT:
This DTC relates to the Accelerator Pedal Position (APP) sensor.

DESCRIPTION

Refer to DTC P2120 (See page ES-296).

DTC No.	DTC Detection Conditions	Trouble Areas
P2121	Difference between VPA and VPA2 less than 0.4 V, or more than 1.2 V for 0.5 seconds (1 trip detection logic)	• Accelerator pedal position sensor • ECM

ES

MONITOR DESCRIPTION

The accelerator pedal position sensor is mounted on the accelerator pedal bracket. The accelerator pedal position sensor has 2 sensor elements and 2 signal outputs: VPA and VPA2. VPA is used to detect the actual accelerator pedal angle (used for engine control) and VPA2 is used to detect malfunctions in VPA. When the difference between the voltage outputs of VPA and VPA2 deviates from the standard, the ECM determines that the accelerator pedal position sensor is a malfunctioning. The ECM turns on the MIL and the DTC is set.

MONITOR STRATEGY

Related DTCs	P2121: Accelerator pedal position (APP) sensor rationality
Required Sensors/Components (Main)	APP sensor
Required Sensors/Components (Related)	-
Frequency of Operation	Continuous
Duration	0.5 seconds
MIL Operation	Immediate
Sequence of Operation	None

TYPICAL ENABLING CONDITIONS

Monitor runs whenever following DTCs not present	None
Either of following conditions 1 or 2 met:	-
1. Ignition switch	ON
2. Throttle actuator power	ON

TYPICAL MALFUNCTION THRESHOLDS

Difference between VPA voltage (learned value) and VPA2 voltage (learned value)	Less than 0.4 V, or more than 1.2 V

FAIL-SAFE

The accelerator pedal position sensor has two (main and sub) sensor circuits. If a malfunction occurs in either of the sensor circuits, the ECM detects the abnormal signal voltage difference between the two sensor circuits and switches to limp mode. In limp mode, the functioning circuit is used to calculate the accelerator pedal opening angle to allow the vehicle to continue driving. If both circuits malfunction, the ECM regards the opening angle of the accelerator pedal as being fully closed. In this case, the throttle valve remains closed as if the engine is idling.
If a pass condition is detected and then the ignition switch is turned OFF, the fail-safe operation stops and the system returns to a normal condition.

WIRING DIAGRAM

Refer to DTC P2120 (See page ES-300).

INSPECTION PROCEDURE

HINT:

Read freeze frame data using an intelligent tester. Freeze frame data record the engine condition when malfunctions are detected. When troubleshooting, freeze frame data can help determine if the vehicle was moving or stationary, if the engine was warmed up or not, if the air-fuel ratio was lean or rich, and other data, from the time the malfunction occurred.

1	READ VALUE USING INTELLIGENT TESTER (ACCEL POS #1 AND ACCEL POS #2)

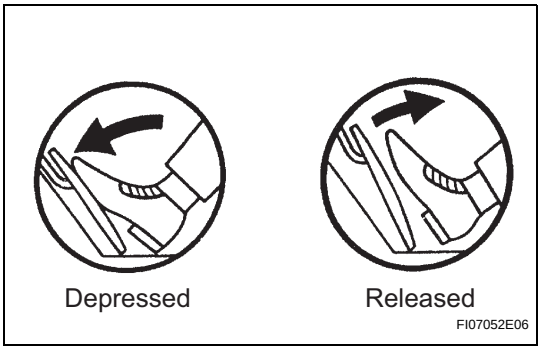

(a) Connect an intelligent tester to the DLC3.
(b) Turn the ignition switch ON and turn the tester ON.
(c) Select the following menu items: DIAGNOSIS / ENHANCED OBD II / DATA LIST / ETCS / ACCEL POS #1 and ACCEL POS #2.
(d) Read the values displayed on the tester.

Standard Voltage

Accelerator Pedal Operations	ACCEL POS #1	ACCEL POS #2
Released	0.5 to 1.1 V	1.2 to 2.0 V
Depressed	2.6 to 4.5 V	3.4 to 5.0 V

OK → Go to step 3

NG

2	CHECK HARNESS AND CONNECTOR (ACCELERATOR PEDAL POSITION SENSOR - ECM) (See page ES-306)

NG → REPAIR OR REPLACE HARNESS OR CONNECTOR

OK

3	REPLACE ACCELERATOR PEDAL ROD ASSEMBLY

Replace the accelerator pedal rod assembly (See page ES-449).

NEXT

4	CHECK WHETHER DTC OUTPUT RECURS (DTC P2121)

(a) Connect an intelligent tester to the DLC3.
(b) Turn the ignition switch ON and turn the tester ON.
(c) Clear DTCs (See page ES-38).
(d) Start the engine.
(e) Allow the engine to idle for 15 seconds.

(f) Select the following menu items: DIAGNOSIS / ENHANCED OBD II / DTC INFO / CURRENT CODES.
(g) Read DTCs.

Result

Display (DTC Output)	Proceed To
P2121	A
No output	B

B → **SYSTEM OK**

A

REPLACE ECM (See page ES-446)

DTC	P2195	Oxygen (A/F) Sensor Signal Stuck Lean (Bank 1 Sensor 1)
DTC	P2196	Oxygen (A/F) Sensor Signal Stuck Rich (Bank 1 Sensor 1)
DTC	P2197	Oxygen (A/F) Sensor Signal Stuck Lean (Bank 2 Sensor 1)
DTC	P2198	Oxygen (A/F) Sensor Signal Stuck Rich (Bank 2 Sensor 1)

ES

HINT:
- Although the DTC titles say oxygen sensor, these DTCs relate to the Air-Fuel Ratio (A/F) sensor.
- Sensor 1 refers to the sensor mounted in front of the Three-Way Catalytic Converter (TWC) and located near the engine assembly.

DESCRIPTION

The A/F sensor generates a voltage* that corresponds to the actual air-fuel ratio. This sensor voltage is used to provide the ECM with feedback so that it can control the air-fuel ratio. The ECM determines the deviation from the stoichiometric air-fuel ratio level, and regulates the fuel injection time. If the A/F sensor malfunctions, the ECM is unable to control the air-fuel ratio accurately.

The A/F sensor is the planar type and is integrated with the heater, which heats the solid electrolyte (zirconia element). This heater is controlled by the ECM. When the intake air volume is low (the exhaust gas temperature is low), a current flows into the heater to heat the sensor, in order to facilitate accurate oxygen concentration detection. In addition, the sensor and heater portions are narrower than the conventional type. The heat generated by the heater is conducted to the solid electrolyte though the alumina, therefore the sensor activation is accelerated.

In order to obtain a high purification rate of the carbon monoxide (CO), hydrocarbon (HC) and nitrogen oxide (NOx) components in the exhaust gas, a TWC is used. For the most efficient use of the TWC, the air-fuel ratio must be precisely controlled so that it is always close to the stoichiometric level.

*: Value changes inside the ECM. Since the A/F sensor is the current output element, a current is converted in to a voltage inside the ECM. Any measurements taken at the A/F sensor or ECM connectors will show a constant voltage.

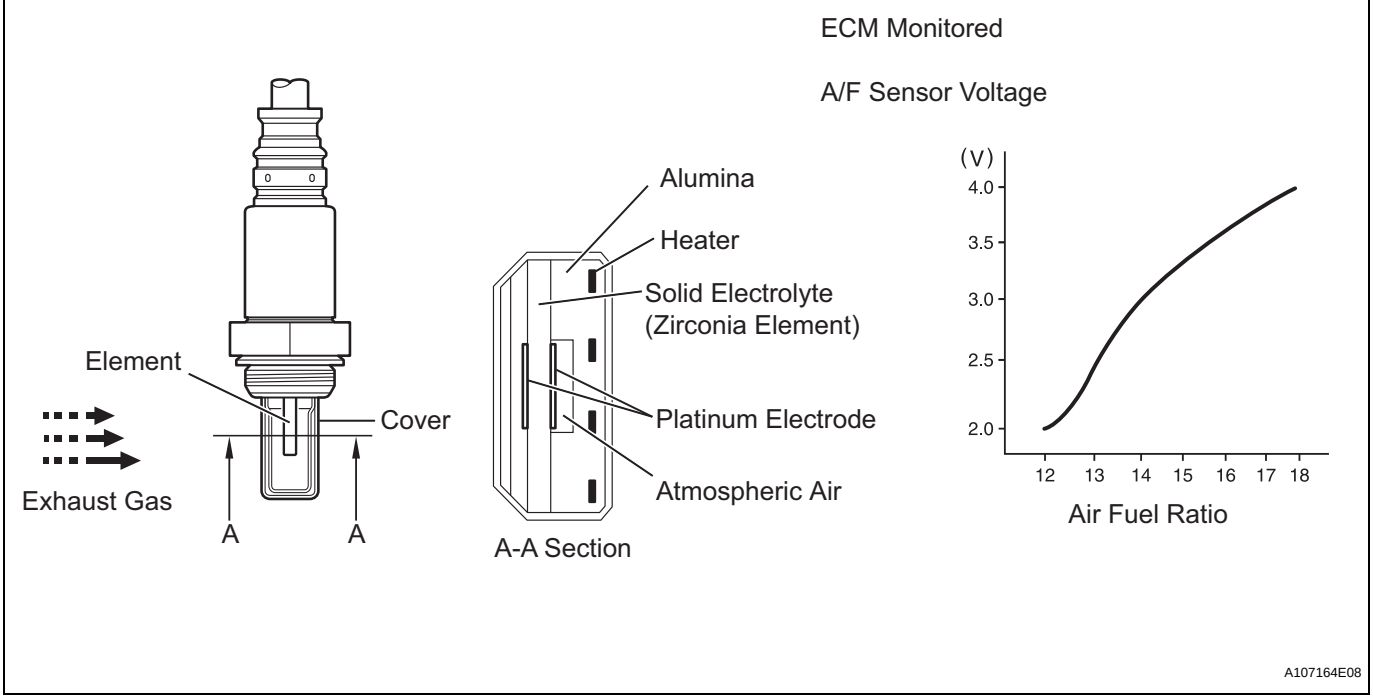

DTC No.	DTC Detection Conditions	Trouble Areas
P2195 P2197	Conditions (a) and (b) continue for 10 seconds or more (2 trip detection logic) (a) Air-Fuel Ratio (A/F) sensor voltage more than 3.8 V (b) Heated Oxygen (HO2) sensor voltage 0.15 V or more	• Open or short in A/F sensor (bank 1, 2 sensor 1) circuit • A/F sensor (bank 1, 2 sensor 1) • A/F sensor (bank 1, 2 sensor 1) heater • A/F sensor heater relay • A/F sensor heater and relay circuits • Air induction system • Fuel pressure • Injector • ECM
	While fuel-cut operation performed (during vehicle deceleration), air-furl ratio (A/F) sensor current 3.6 mA or more for 3 seconds (2 trip detection logic)	• A/F sensor • ECM
P2196 P2198	Conditions (a) and (b) continue for 10 seconds or more (2 trip detection logic) (a) A/F sensor voltage less than 2.8 V (b) HO2 sensor voltage less than 0.6 V	• Open or short in A/F sensor (bank 1, 2 sensor 1) circuit • A/F sensor (bank 1, 2 sensor 1) • A/F sensor (bank 1, 2 sensor 1) heater • A/F sensor heater relay • A/F sensor heater and relay circuits • Air induction system • Fuel pressure • Injector • ECM
	While fuel-cut operation performed (during vehicle deceleration), air-furl ratio (A/F) sensor current less than 1.4 mA for 3 seconds (2 trip detection logic)	• A/F sensor • ECM

HINT:

- DTCs P2195 and P2196 indicate malfunctions related to bank 1 A/F sensor circuit.
- DTCs P2197 and P2198 indicate malfunctions related to bank 2 A/F sensor circuit.
- Bank 1 refers to the bank that includes cylinder No. 1.
- Bank 2 refers to the bank that includes cylinder No. 2.
- When any of these DTCs are set, check the A/F sensor voltage output by selecting the following menu items on an intelligent tester: DIAGNOSIS / ENHANCED OBD II / DATA LIST / PRIMARY / AFS B1S1 or AFS B2S1.
- Short-term fuel trim values can also be read using an intelligent tester.

- The ECM regulates the voltages at the A1A+, A2A+, A1A- and A2A- terminals of the ECM to a constant level. Therefore, the A/F sensor voltage output cannot be confirmed without using an intelligent tester.
- If a A/F sensor malfunction is detected, the ECM sets a DTC.

MONITOR DESCRIPTION

Sensor voltage detection monitor

Under the air-fuel ratio feedback control, if the A/F sensor voltage output indicates rich or lean for a certain period of time, the ECM determines that there is a malfunction in the A/F sensor. The ECM illuminates the MIL and sets a DTC.

Example:

If the A/F sensor voltage output is less than 2.8 V (very rich condition) for 10 seconds, despite the HO2 sensor voltage output being less than 0.6 V, the ECM sets DTC P2196 or P2198. Alternatively, if the A/F sensor voltage output is more than 3.8 V (very lean condition) for 10 seconds, despite the HO2 sensor voltage output being 0.15 V or more, DTC P2195 or P2197 is set.

ES

Sensor current detection monitor

A rich air-fuel mixture causes a low A/F sensor current, and a lean air-fuel mixture causes a high A/F sensor current. Therefore, the sensor output becomes low during acceleration, and it becomes high during deceleration with the throttle valve fully closed. The ECM monitors the A/F sensor current during fuel-cut and detects any abnormal current values.

If the A/F sensor output is 3.6 mA or more for more than 3 seconds of cumulative time, the ECM interprets this as a malfunction in the A/F sensor and sets DTC P2195 or P2197 (high-side stuck). If the A/F sensor output is 1.4 mA or less for more than 3 seconds of cumulative time, the ECM sets DTC P2196 or P2198 (low-side stuck).

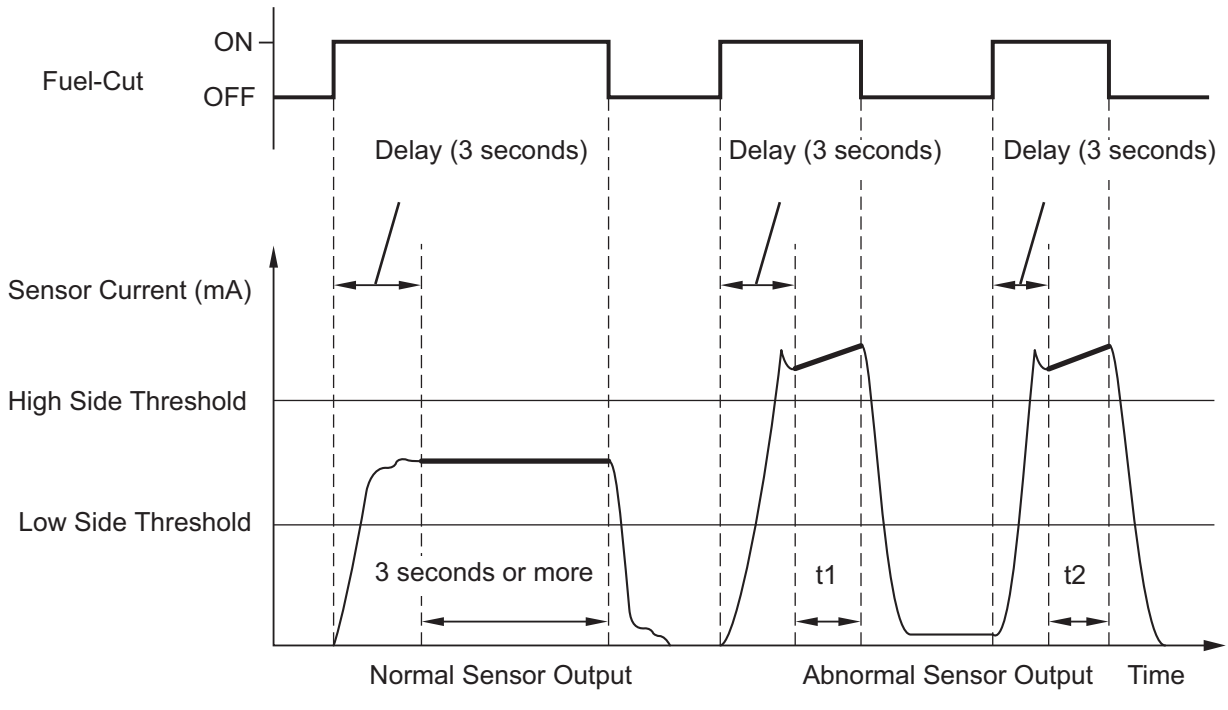

MONITOR STRATEGY

Related DTCs	P2195: A/F sensor (Bank 1) signal stuck lean P2196: A/F sensor (Bank 1) signal stuck rich P2197: A/F sensor (Bank 2) signal stuck lean P2198: A/F sensor (Bank 2) signal stuck rich
Required Sensors/Components (Main)	A/F sensor
Required Sensors/Components (Related)	HO2 sensor
Frequency of Operation	Continuous
Duration	10 seconds: Sensor voltage detection monitor 3 seconds: Sensor current detection monitor
MIL Operation	2 driving cycles
Sequence of Operation	None

TYPICAL ENABLING CONDITIONS

ALL

Monitor runs whenever following DTCs not present	P0031, P0032, P0051, P0052 (A/F sensor heater - Sensor 1) P0037, P0038, P0057, P0058 (O2 Sensor heater - Sensor 2) P0100 - P0103 (MAF meter) P0110 - P0113 (IAT sensor) P0115 - P0118 (ECT sensor) P0120 - P0223, P2135 (TP sensor) P0125 (Insufficient ECT for closed loop) P0136, P0156 (O2 Sensor - Sensor 2) P0171, P0172, P0174, P0175 (Fuel system) P0300 - P0306 (Misfire) P0335 (CKP sensor) P0340, P0341 (CMP sensor) P0455, P0456 (EVAP system) P0500 (VSS)

Sensor voltage detection monitor (Lean side malfunction P2195, P2197):

Time while all of following conditions met	2 seconds or more
Rear HO2 sensor voltage	0.15 V or more
Time after engine start	30 seconds or more
A/F sensor status	Activated
Fuel system status	Closed-loop
Engine	Running

Sensor voltage detection monitor (Rich side malfunction P2196, P2198):

Time while all of following conditions met	2 seconds or more
Rear HO2 sensor voltage	Below 0.6 V
Time after engine start	30 seconds or more
A/F sensor status	Activated
Fuel system status	Closed-loop
Engine	Running

Sensor current detection monitor (P2195, P2196, P2197, P2198):

Battery voltage	11 V or more
Atmospheric pressure	76 kpa (570 mmHg) or higher
Air-fuel ratio sensor status	Activated
Engine coolant temperature	75°C (167°F) or more
Continuous time of fuel cut	3 to 10 seconds

TYPICAL MALFUNCTION THRESHOLDS

Sensor voltage detection monitor (Lean side malfunction P2195, P2197):

A/F sensor voltage	More than 3.8 V for 10 seconds

Sensor voltage detection monitor (Rich side malfunction P2196, P2198):

A/F sensor voltage	Less than 2.8 V for 10 seconds

Sensor current detection monitor (High side malfunction P2195, P2197):

Air-fuel ratio sensor current during fuel cut	3.6 mA or more

Sensor current detection monitor (Low side malfunction P2196, P2198):

Air-fuel ratio sensor current during fuel cut	Less than 1.4 mA

ES

MONITOR RESULT

Refer to CHECKING MONITOR STATUS (See page ES-20).

WIRING DIAGRAM

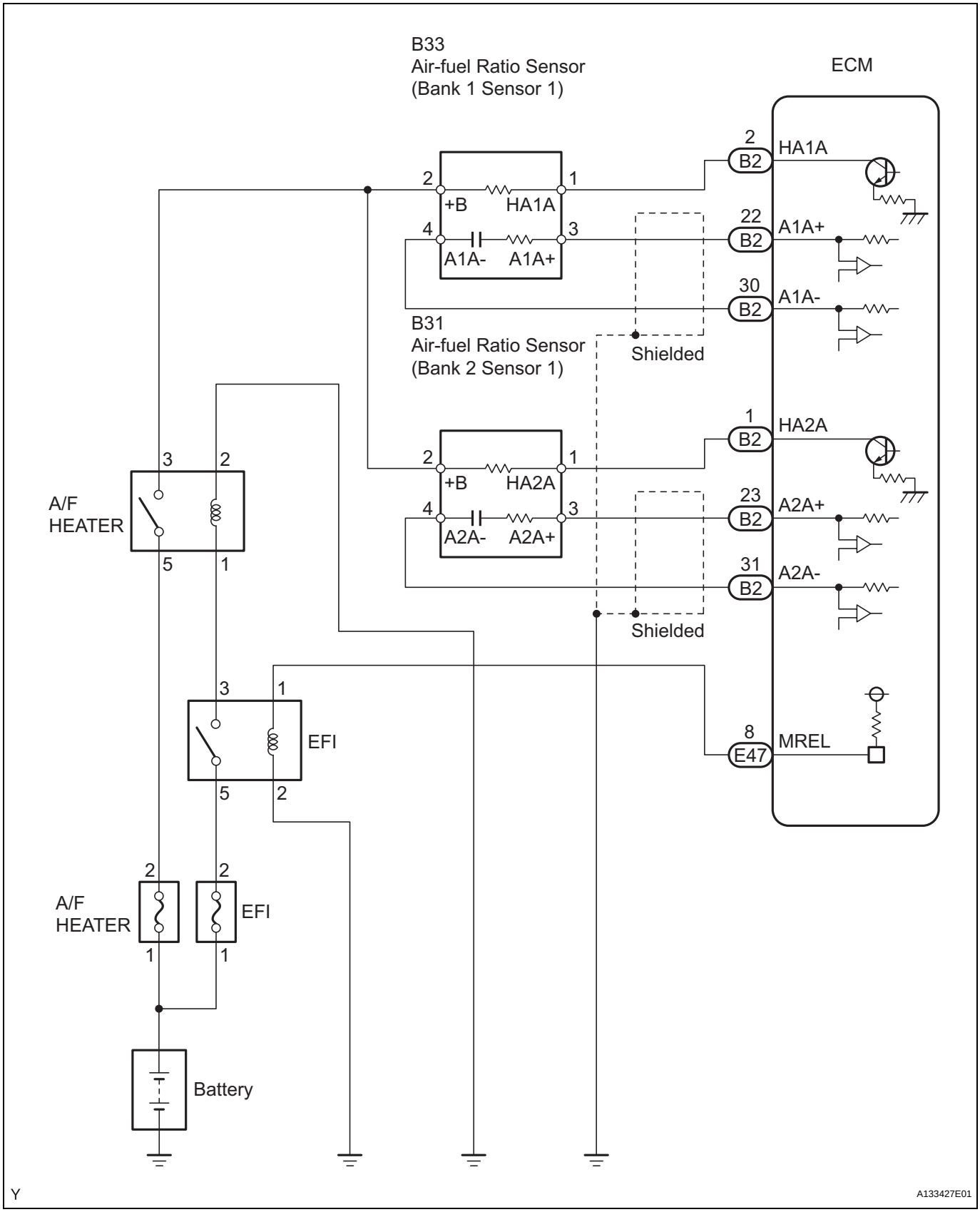

CONFIRMATION DRIVING PATTERN

This confirmation driving pattern is used in the "PERFORM CONFIRMATION DRIVING PATTERN" procedure of the following diagnostic troubleshooting procedure.

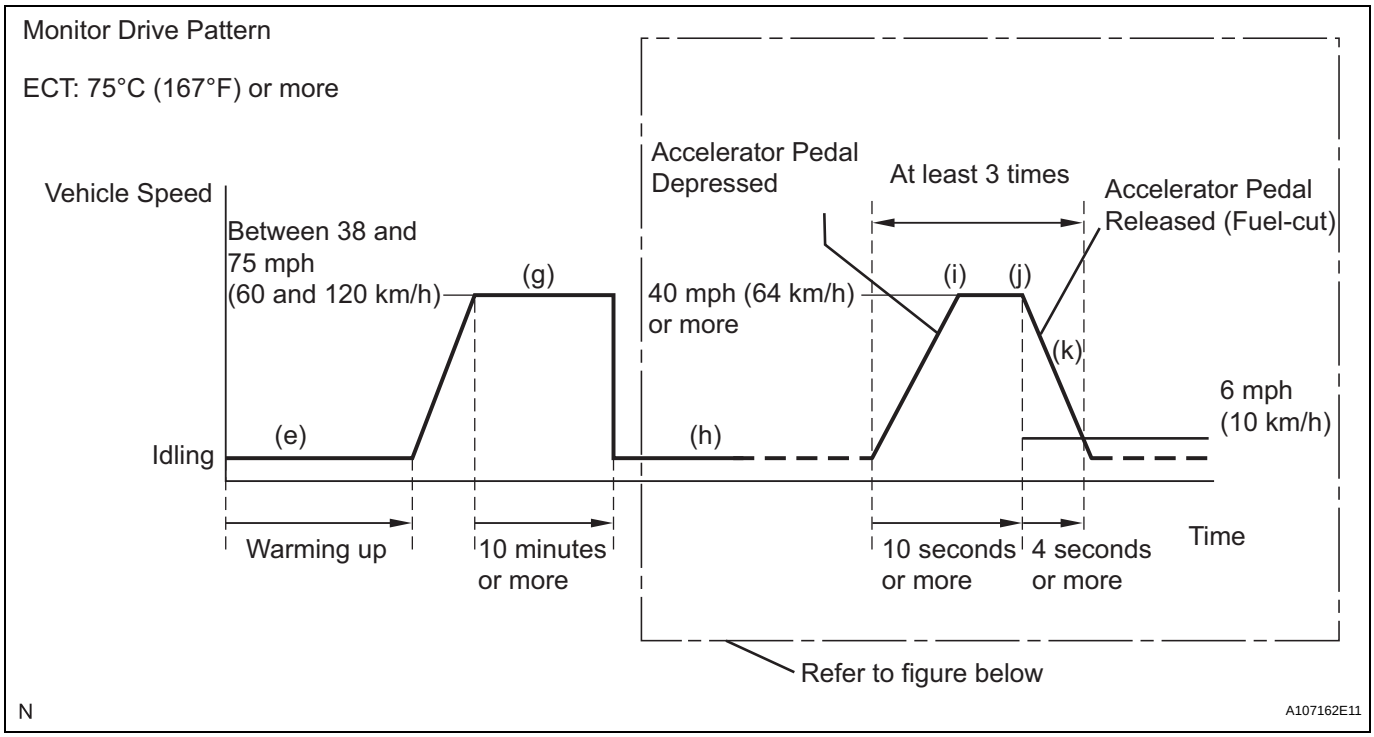

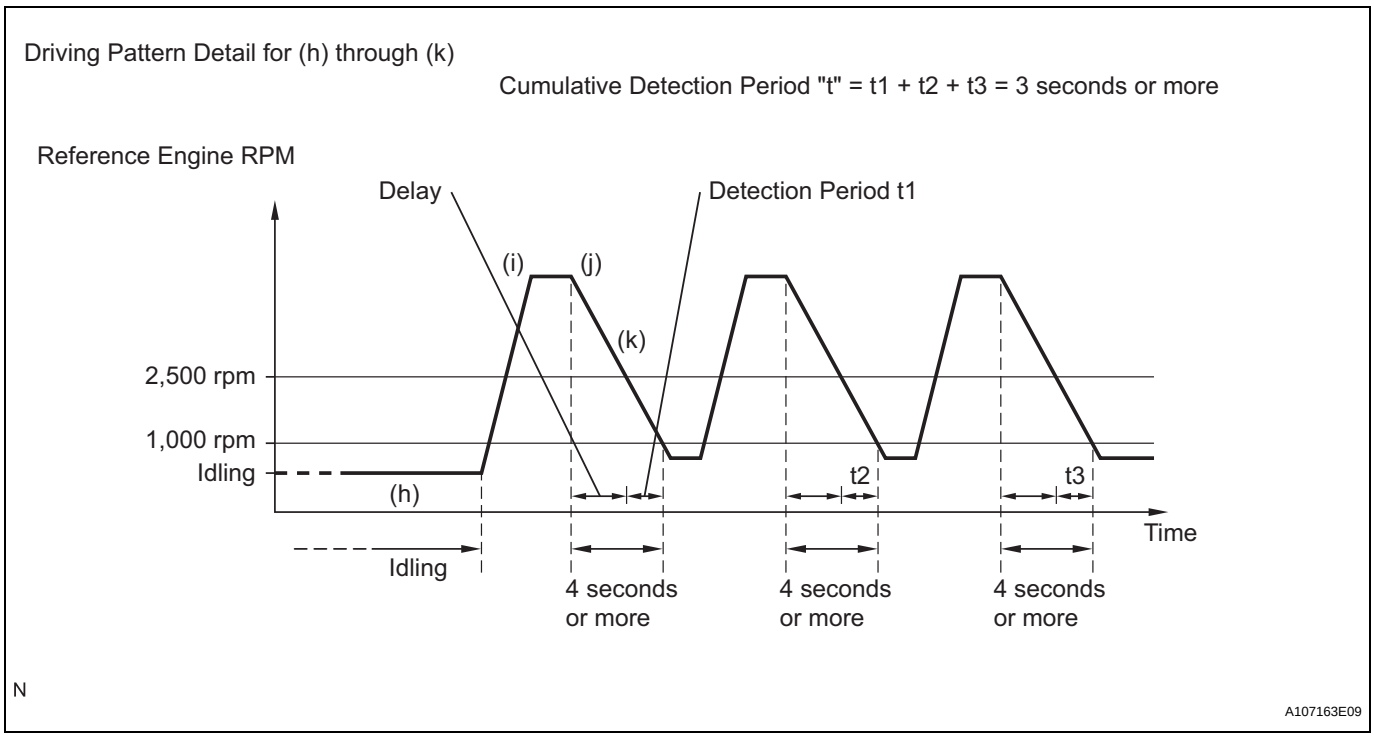

(a) Connect an intelligent tester to the DLC3.
(b) Turn the ignition switch ON.
(c) Turn the tester ON.
(d) Clear DTCs (See page ES-38).
(e) Start the engine, and warm it up until the ECT reaches 75°C (167°F) or higher.
(f) Select the following menu items to check the fuel-cut status: DIAGNOSIS / ENHANCED OBD II / DATA LIST / USER DATA / FC IDLE.
(g) Drive the vehicle at between 38 mph (60 km/h) and 75 mph (120 km/h) for at least 10 minutes.
(h) Change the transmission to 2nd gear.

(i) Drive the vehicle at proper vehicle speed to perform fuel-cut operation (refer to the following HINT).
HINT:
Fuel-cut is performed when the following conditions are met:
- Accelerator pedal fully released.
- Engine speed is 2,500 rpm or more (fuel injection returns at 1,000 rpm).

(j) Accelerate the vehicle to 40 mph (64 km/h) or more by depressing the accelerator pedal for at least 10 seconds.
(k) Soon after performing step (j) above, release the accelerator pedal for at least 4 seconds without depressing the brake pedal, in order to execute fuel-cut control.
(l) Allow the vehicle to decelerate until the vehicle speed declines to less than 6 mph (10 km/h).
(m) Repeat steps from (h) through (k) above at least 3 times in one driving cycle.
HINT:
Completion of all A/F sensor monitors is required to change the value in TEST RESULT.
CAUTION:
Strictly observe posted speed limits, traffic laws, and road conditions when performing these drive patterns.

ES

INSPECTION PROCEDURE

HINT:
Malfunctioning areas can be identified by performing the A/F CONTROL function provided in the ACTIVE TEST. The A/F CONTROL function can help to determine whether the Air-Fuel Ratio (A/F) sensor, Heated Oxygen (HO2) sensor and other potential trouble areas are malfunctioning.
The following instructions describe how to conduct the A/F CONTROL operation using an intelligent tester.
(1) Connect an intelligent tester to the DLC3.
(2) Start the engine and turn the tester ON.
(3) Warm up the engine at an engine speed of 2,500 rpm for approximately 90 seconds.
(4) Select the following menu items: DIAGNOSIS / ENHANCED OBD II / ACTIVE TEST / A/F CONTROL.
(5) Perform the A/F CONTROL operation with the engine in an idling condition (press the RIGHT or LEFT button to change the fuel injection volume).
(6) Monitor the voltage outputs of the A/F and HO2 sensors (AFS B1S1 and O2S B1S2 or AFS B2S1 and O2S B2S2) displayed on the tester.
HINT:
- The A/F CONTROL operation lowers the fuel injection volume by 12.5 % or increases the injection volume by 25 %.
- Each sensor reacts in accordance with increases and decreases in the fuel injection volume.

Standard

Tester Display (Sensor)	Injection Volumes	Status	Voltages
AFS B1S1 or AFS B2S1 (A/F)	+25 %	Rich	Less than 3.0
AFS B1S1 or AFS B2S1 (A/F)	-12.5 %	Lean	More than 3.35
O2S B1S2 or O2S B2S2 (HO2)	+25 %	Rich	More than 0.55
O2S B1S2 or O2S B2S2 (HO2)	-12.5 %	Lean	Less than 0.4

NOTICE:
The Air-Fuel Ratio (A/F) sensor has an output delay of a few seconds and the Heated Oxygen (HO2) sensor has a maximum output delay of approximately 20 seconds.

Case	A/F Sensor (Sensor 1) Output Voltage		HO2 Sensor (Sensor 2) Output Voltage		Main Suspected Trouble Areas
1	Injection volume +25 % -12.5 %		Injection volume +25 % -12.5 %		-
	Output voltage More than 3.35 V Less than 3.0 V		Output voltage More than 0.55 V Less than 0.4 V		
2	Injection volume +25 % -12.5 %		Injection volume +25 % -12.5 %		• A/F sensor • A/F sensor heater • A/F sensor circuit
	Output voltage Almost no reaction		Output voltage More than 0.55 V Less than 0.4 V		
3	Injection volume +25 % -12.5 %		Injection volume +25 % -12.5 %		• HO2 sensor • HO2 sensor heater • HO2 sensor circuit
	Output voltage More than 3.35 V Less than 3.0 V		Output voltage Almost no reaction		
4	Injection volume +25 % -12.5 %		Injection volume +25 % -12.5 %		• Injector • Fuel pressure • Gas leakage from exhaust system (Air-fuel ratio extremely lean or rich)
	Output voltage Almost no reaction		Output voltage Almost no reaction		

- Following the A/F CONTROL procedure enables technicians to check and graph the voltage outputs of both the A/F and HO2 sensors.
- To display the graph, select the following menu items on the tester: DIAGNOSIS / ENHANCED OBD II / ACTIVE TEST / A/F CONTROL / USER DATA / AFS B1S1 and O2S B1S2 or AFS B2S1 and O2S B2S2, and press the YES button and then the ENTER button followed by the F4 button.

HINT:

- Read freeze frame data using an intelligent tester. Freeze frame data record the engine condition when malfunctions are detected. When troubleshooting, freeze frame data can help determine if the vehicle was moving or stationary, if the engine was warmed up or not, if the air-fuel ratio was lean or rich, and other data, from the time the malfunction occurred.
- A low A/F sensor voltage could be caused by a rich air-fuel mixture. Check for conditions that would cause the engine to run rich.
- A high A/F sensor voltage could be caused by a lean air-fuel mixture. Check for conditions that would cause the engine to run lean.

1	CHECK ANY OTHER DTCS OUTPUT (IN ADDITION TO P2195, P2196, P2197 OR P2198)

(a) Connect an intelligent tester to the DLC3.
(b) Turn the ignition switch ON.
(c) Turn the tester ON.
(d) Select the following menu items: DIAGNOSIS / ENHANCED OBD II / DTC INFO / CURRENT CODES.
(e) Read DTCs.

Result

Display (DTC Output)	Proceed To
P2195, P2196, P2197 or P2198	A
P2195, P2196, P2197 or P2198 and other DTCs	B

HINT:
If any DTCs other than P2195, P2196, P2197 or P2198 are output, troubleshoot those DTCs first.

B → **GO TO DTC CHART (See page ES-57)**

A

2 READ VALUE USING INTELLIGENT TESTER (TEST VALUE OF A/F SENSOR)

(a) Connect an intelligent tester to the DLC3.
(b) Turn the ignition switch ON and turn the tester ON.
(c) Clear DTCs (See page ES-38).
(d) Allow the vehicle to drive in accordance with the drive pattern described in the CONFIRMATION DRIVING PATTERN.
(e) Select the following menu items on the tester: DIAGNOSIS / ENHANCED OBD II / MONITOR INFO / MONITOR STATUS.
(f) Check that the status of O2S MON is COMPL.
If the status is still INCMPL, drive the vehicle according to the driving pattern again.
HINT:
- AVAIL indicates that the component has not been monitored yet.
- COMPL indicates that the component is functioning normally.
- INCMPL indicates that the component is malfunctioning.

(g) Select the following menu items: DIAGNOSIS / ENHANCED OBD II / MONITOR INFO / TEST RESULT / RANGE B1S1, then press the ENTER button.
(h) Check the test value of the A/F sensor output current during fuel-cut.

Result

Test Value	Proceed To
Within normal range (1.4 mA or more, and less than 3.6 mA)	A
Outside normal range (Less than 1.4 mA, or 3.6 mA or more)	B

B → **Go to step 20**

A

3 READ VALUE USING INTELLIGENT TESTER (OUTPUT VOLTAGE OF A/F SENSOR)

(a) Connect an intelligent tester to the DLC3.
(b) Start the engine.
(c) Turn the tester ON.

(d) Warm up the Air-Fuel Ratio (A/F) sensor at an engine speed of 2,500 rpm for 90 seconds.
(e) Select the following menu items: DIAGNOSIS / ENHANCED OBD II / SNAPSHOT / MANUAL SNAPSHOT / USER DATA / AFS B1S1 or AFS B2S1 and ENGINE SPD.
(f) Check the A/F sensor voltage three times, when the engine is in each of the following conditions:
  (1) While idling (check for at least 30 seconds)
  (2) At an engine speed of approximately 2,500 rpm (without any sudden changes in engine speed)
  (3) Raise the engine speed to 4,000 rpm and then quickly release the accelerator pedal so that the throttle valve is fully closed.

ES

Standard

Conditions	A/F Sensor Voltage Variations	Reference
(1) and (2)	Changes at approximately 3.3 V	Between 3.1 V and 3.5 V
(3)	Increases to 3.8 V or more	This occurs during engine deceleration (when fuel-cut performed)

HINT:
For more information, see the diagrams below.

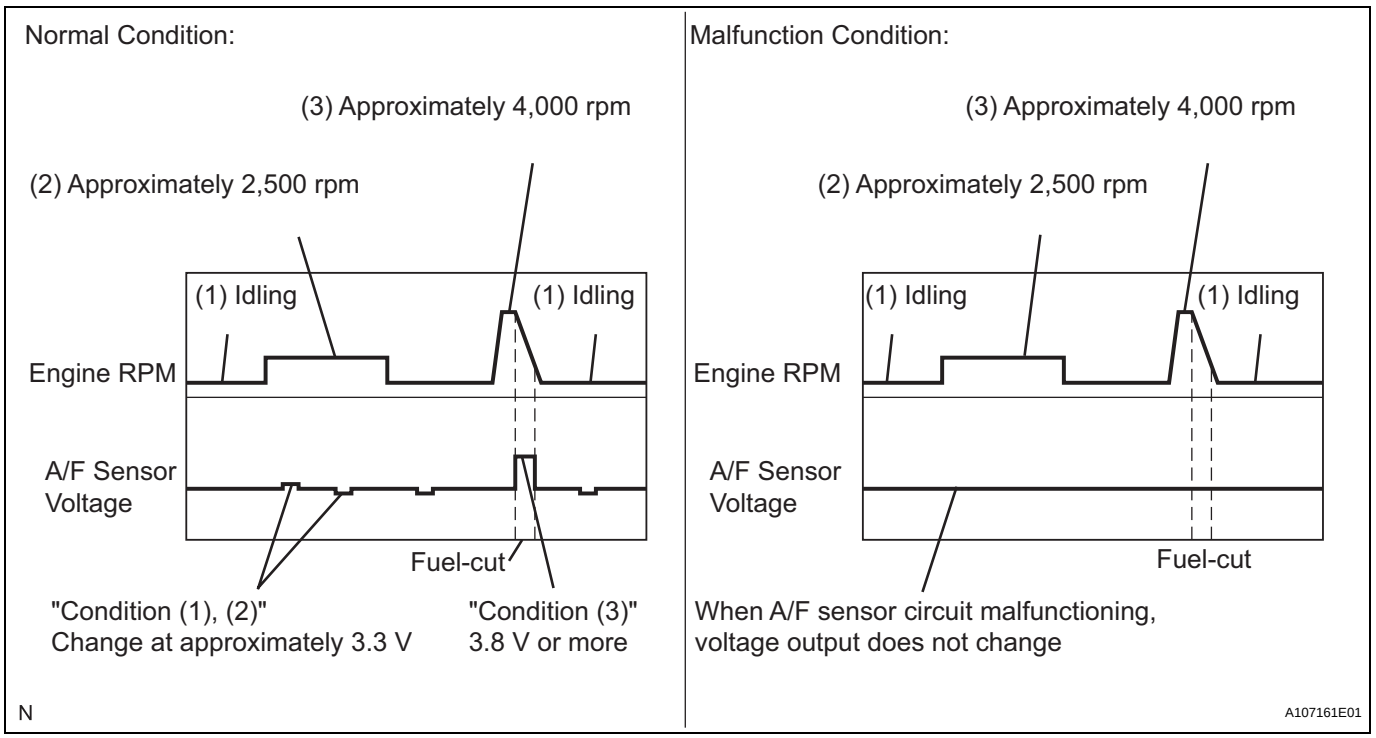

HINT:
- If the output voltage of the A/F sensor remains at approximately 3.3 V (see Malfunction Condition diagram) under any conditions, including those above, the A/F sensor may have an open circuit. (This will also happen if the A/F sensor heater has an open circuit.)
- If the output voltage of the A/F sensor remains at either approximately 3.8 V or more, or 2.8 V or less (see Malfunction Condition diagram) under any conditions, including those above, the A/F sensor may have a short circuit.

- The ECM stops fuel injection (fuel cut) during engine deceleration. This causes a lean condition and results in a momentary increase in the A/F sensor output voltage.
- The ECM must establish a closed throttle valve position learning value to perform fuel cut. If the battery terminal has been reconnected, the vehicle must be driven over 10 mph (16 km/h) to allow the ECM to learn the closed throttle valve position.
- When the vehicle is driven:
  The output voltage of the A/F sensor may be below 2.8 V during fuel enrichment. For the vehicle, this translates to a sudden increase in speed with the accelerator pedal fully depressed when trying to overtake another vehicle. The A/F sensor is functioning normally.
- The A/F sensor is a current output element; therefore, the current is converted into a voltage inside the ECM. Measuring the voltage at the connectors of the A/F sensor or ECM will show a constant voltage result.

NG → **Go to step 10**

OK

4	PERFORM CONFIRMATION DRIVING PATTERN

NEXT

5	CHECK WHETHER DTC OUTPUT RECURS (DTC P2195, P2196, P2197 OR P2198)

(a) Connect an intelligent tester to the DLC3.
(b) Turn the ignition switch ON and the tester ON.
(c) Select the following menu items: DIAGNOSIS / ENHANCED OBD II / DTC INFO / PENDING CODES.
(d) Read DTCs.

Result

Display (DTC Output)	Proceed To
P2195, P2196, P2197 or P2198	A
No output	B

B → **Go to step 9**

A

6	REPLACE AIR FUEL RATIO SENSOR

Replace the air fuel ratio sensor (See page EC-21).

NEXT

7	PERFORM CONFIRMATION DRIVING PATTERN

NEXT

8	CHECK WHETHER DTC OUTPUT RECURS (DTC P2195, P2196, P2197 OR P2198)

(a) Connect an intelligent tester to the DLC3.
(b) Turn the ignition switch ON and the tester ON.
(c) Select the following menu items: DIAGNOSIS / ENHANCED OBD II / DTC INFO / PENDING CODES.
(d) Read DTCs.

ES

Result

Display (DTC Output)	Proceed To
No output	A
P2195, P2196, P2197 or P2198	B

B → REPLACE ECM AND PERFORM CONFIRMATION DRIVING PATTERN

A

9	CONFIRM IF VEHICLE HAS RUN OUT OF FUEL IN PAST

NO → CHECK FOR INTERMITTENT PROBLEMS

YES

DTC CAUSED BY RUNNING OUT OF FUEL

10	INSPECT AIR FUEL RATIO SENSOR (HEATER RESISTANCE) (See page ES-85)

NG → REPLACE AIR FUEL RATIO SENSOR (See page EC-21)

OK

11	INSPECT AIR FUEL RATIO SENSOR HEATER RELAY (See page ES-86)

NG → REPLACE AIR FUEL RATIO SENSOR HEATER RELAY

OK

12 CHECK HARNESS AND CONNECTOR (A/F SENSOR - ECM)

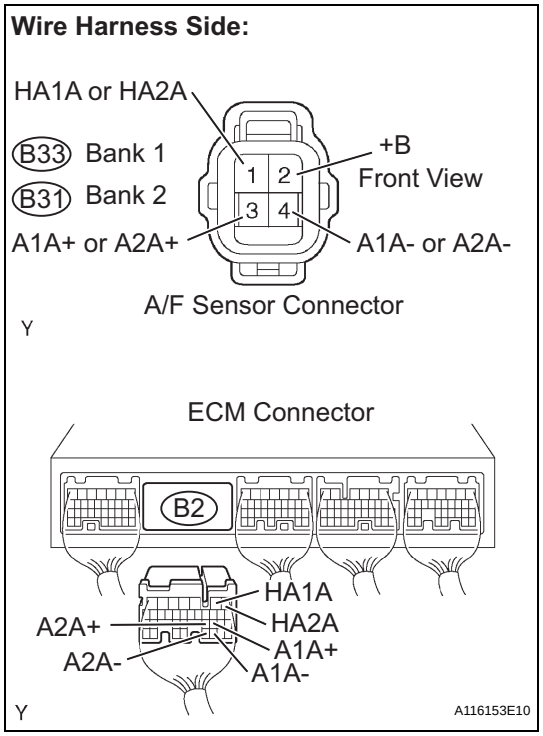

(a) Disconnect the B31 or B33 A/F sensor connector.
(b) Turn the ignition switch ON.
(c) Measure the voltage between the +B terminal of the A/F sensor connector and body ground.

Standard Voltage

Tester Connections	Specified Conditions
+B (B33-2) - Body ground	11 to 14 V
+B (B31-2) - Body ground	

(d) Turn the ignition switch OFF.
(e) Disconnect the B2 ECM connector.
(f) Check the resistance.

Standard Resistance (Check for open)

Tester Connections	Specified Conditions
HA1A (B33-1) - HA1A (B2-2)	Below 1 Ω
A1A+ (B33-3) - A1A+ (B2-22)	
A1A- (B33-4) - A1A- (B2-30)	
HA2A (B31-1) - HA2A (B2-1)	
A2A+ (B31-3) - A2A+ (B2-23)	
A2A- (B31-4) - A2A- (B2-31)	

Standard Resistance (Check for short)

Tester Connections	Specified Conditions
HA1A (B33-1) or HA1A (B2-2) - Body ground	10 kΩ or higher
A1A+ (B33-3) or A1A+ (B2-22) - Body ground	
A1A- (B33-4) or A1A- (B2-30) - Body ground	
HA2A (B31-1) or HA2A (B2-1) - Body ground	
A2A+ (B31-3) or A2A+ (B2-23) - Body ground	
A2A- (B31-4) or A2A- (B2-31) - Body ground	

(g) Reconnect the ECM connector.
(h) Reconnect the A/F sensor connector.

ES

Reference (System Diagram of Bank 1 Sensor 1):

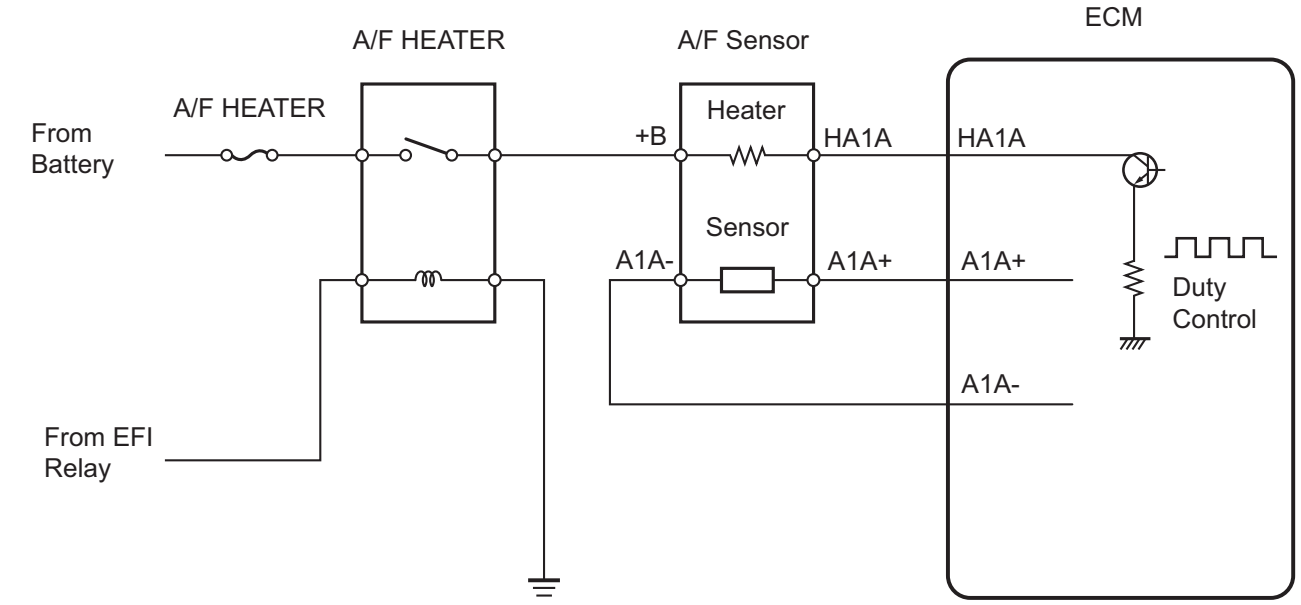

ES

NG → **REPAIR OR REPLACE HARNESS OR CONNECTOR**

OK

13	CHECK AIR INDUCTION SYSTEM

(a) Check the air induction system for vacuum leakage.
OK:
No leakage from air induction system.

NG → **REPAIR OR REPLACE AIR INDUCTION SYSTEM**

OK

14	CHECK FUEL PRESSURE

(a) Check the fuel pressure (See page FU-6).

NG → **REPAIR OR REPLACE FUEL SYSTEM**

OK

15	INSPECT FUEL INJECTOR ASSEMBLY

(a) Check the injector injection (whether fuel volume is high or low, and whether injection pattern is poor).

NG → **REPLACE FUEL INJECTOR ASSEMBLY (See page FU-11)**

OK

16	REPLACE AIR FUEL RATIO SENSOR

Replace the air fuel ratio sensor (See page EC-21).

NEXT

17	PERFORM CONFIRMATION DRIVING PATTERN

NEXT

ES

18	CHECK WHETHER DTC OUTPUT RECURS (DTC P2195, P2196, P2197 OR P2198)

(a) Connect an intelligent tester to the DLC3.
(b) Turn the ignition switch ON and the tester ON.
(c) Select the following menu items: DIAGNOSIS / ENHANCED OBD II / DTC INFO / PENDING CODES.
(d) Read DTCs.

Result

Display (DTC Output)	Proceed To
No output	A
P2195, P2196, P2197 or P2198	B

B → REPLACE ECM AND PERFORM CONFIRMATION DRIVING PATTERN

A

19	CONFIRM IF VEHICLE HAS RUN OUT OF FUEL IN PAST

NO → CHECK FOR INTERMITTENT PROBLEMS

YES

DTC CAUSED BY RUNNING OUT OF FUEL

20	REPLACE AIR FUEL RATIO SENSOR

Replace the air fuel ratio sensor (See page EC-21).

NEXT

21	PERFORM CONFIRMATION DRIVING PATTERN

NEXT

22	CHECK WHETHER DTC OUTPUT RECURS (DTC P2195, P2196, P2197 OR P2198)

(a) Connect an intelligent tester to the DLC3.
(b) Turn the ignition switch ON and turn the tester ON.
(c) Select the following menu items: DIAGNOSIS / ENHANCED OBD II / DTC INFO / PENDING CODES.
(d) Read DTCs.

Result

Display (DTC Output)	Proceed To
No output	A
P2195, P2196, P2197 or P2198 (A/F sensor pending DTCs)	B

ES

B → **REPLACE ECM (See page ES-446)**

A

END

DTC	P2238	Oxygen (A/F) Sensor Pumping Current Circuit Low (Bank 1 Sensor 1)
DTC	P2239	Oxygen (A/F) Sensor Pumping Current Circuit High (Bank 1 Sensor 1)
DTC	P2241	Oxygen (A/F) Sensor Pumping Current Circuit Low (Bank 2 Sensor 1)
DTC	P2242	Oxygen (A/F) Sensor Pumping Current Circuit High (Bank 2 Sensor 1)
DTC	P2252	Oxygen (A/F) Sensor Reference Ground Circuit Low (Bank 1 Sensor 1)
DTC	P2253	Oxygen (A/F) Sensor Reference Ground Circuit High (Bank 1 Sensor 1)
DTC	P2255	Oxygen (A/F) Sensor Reference Ground Circuit Low (Bank 2 Sensor 1)
DTC	P2256	Oxygen (A/F) Sensor Reference Ground Circuit High (Bank 2 Sensor 1)

ES

HINT:
- Although the DTC titles say oxygen sensor, these DTCs relate to the Air-Fuel Ratio (A/F) sensor.
- Sensor 1 refers to the sensor mounted in front of the Three-Way Catalytic Converter (TWC) and located near the engine assembly.

DESCRIPTION

Refer to DTC P2195 (See page ES-307).

DTC No.	DTC Detection Conditions	Trouble Areas
P2238 P2241	• Case 1: Condition (a) or (b) continues for 5.0 seconds or more (2 trip detection logic) (a) AF+ voltage 0.5 V or less (b) (AF+) - (AF-) = 0.1 V or less • Case 2: A/F sensor admittance: Less than 0.022 1/Ω (2 trip detection logic)	• Open or short in A/F sensor (bank 1, 2 sensor 1) circuit • A/F sensor (bank 1, 2 sensor 1) • A/F sensor heater • A/F sensor heater relay • A/F sensor heater and relay circuits • ECM
P2239 P2242	AF+ voltage more than 4.5 V for 5.0 seconds or more (2 trip detection logic)	
P2252 P2255	AF- voltage 0.5 V or less for 5.0 seconds or more (2 trip detection logic)	
P2253 P2256	AF- voltage more than 4.5 V for 5.0 seconds or more (2 trip detection logic)	

HINT:
- DTC P2238, P2239, P2252 and P2253 indicate malfunctions related to the bank 1 A/F sensor circuit.

- DTC P2241, P2242, P2255 and P2256 indicate malfunctions related to the bank 2 A/F sensor circuit.
- Bank 1 refers to the bank that includes cylinder No. 1.
- Bank 2 refers to the bank that includes cylinder No. 2.

MONITOR DESCRIPTION

The Air-Fuel Ratio (A/F) sensor varies its output voltage in proportion to the air-fuel ratio. If the A/F sensor impedance (alternating current resistance) or voltage output deviates greatly from the standard range, the ECM determines that there is an open or short malfunction in the A/F sensor circuit.

MONITOR STRATEGY

Related DTCs	P2238: A/F sensor (Bank 1) open circuit between AF+ and AF- P2238: A/F sensor (Bank 1) short circuit between AF+ and AF- P2238: A/F sensor (Bank 1) short circuit between AF+ and GND P2239: A/F sensor (Bank 1) short circuit between AF+ and +B P2241: A/F sensor (Bank 2) open circuit between AF+ and AF- P2241: A/F sensor (Bank 2) short circuit between AF+ and AF- P2241: A/F sensor (Bank 2) short circuit between AF+ and GND P2242: A/F sensor (Bank 2) short circuit between AF+ and +B P2252: A/F sensor (Bank 1) short circuit between AF- and GND P2253: A/F sensor (Bank 1) short circuit between AF- and +B P2255: A/F sensor (Bank 2) short circuit between AF- and GND P2256: A/F sensor (Bank 2) short circuit between AF- and +B
Required Sensors/Components (Main)	A/F sensor
Required Sensors/Components (Related)	Engine Coolant Temperature (ECT) sensor, Crankshaft position sensor
Frequency of Operation	Once per driving cycle
Duration	10 seconds: A/F sensor open circuit between AF+ and AF- 5 seconds: Others
MIL Operation	2 driving cycles
Sequence of Operation	None

TYPICAL ENABLING CONDITIONS

Monitor runs whenever following DTCs not present	P0031, P0032, P0051, P0052 (A/F sensor heater - Sensor 1) P0100 - P0103 (MAF meter) P0110 - P0113 (IAT sensor) P0115 - P0118 (ECT sensor) P0120 - P0223, P2135 (TP sensor) P0125 (Insufficient ECT for Closed Loop) P0171, P0172, P0174, P0175 (Fuel system) P0300 - P0306 (Misfire) P0335 (CKP sensor) P0340 (CMP sensor) P0455, P0456 (EVAP system) P0500 (VSS)

P2238 and P2241 (open circuit between AF+ and AF-):

AF+ terminal voltage	0.5 to 4.5 V
AF- terminal voltage	0.5 to 4.5 V
Difference between AF+ and AF- terminal voltages	0.1 to 0.8 V
ECT	5°C (41°F) or more
Engine condition	Running
Fuel-cut	OFF
Time after fuel-cut OFF	5 seconds or more
A/F sensor heater	ON
Battery voltage	11 V or more
Ignition switch	ON
Time after ignition switch is OFF to ON	5 seconds or more

Others:

Battery voltage	11 V or more
Ignition switch	ON
Time after ignition switch is OFF to ON	5 seconds or more

TYPICAL MALFUNCTION THRESHOLDS

P2238 and P2241 (Open circuit between AF+ and AF-):

A/F sensor admittance	Below 0.022 1/Ω

P2238 and P2241 (Short circuit between AF+ and GND):

AF+ terminal voltage	0.5 V or less

P2238 and P2241 (Short circuit between AF+ and AF-):

Difference between AF+ and AF- terminal voltages	0.1 V or less

P2239 and P2242 (Short circuit between AF+ and +B):

AF+ terminal voltage	More than 4.5 V

P2252 and P2255 (Short circuit between AF- and GND):

AF- terminal voltage	0.5 V or less

P2253 and P2256 (Short circuit between AF- and +B):

AF- terminal voltage	More than 4.5 V

WIRING DIAGRAM

Refer to DTC P2195 (See page ES-312).

INSPECTION PROCEDURE

HINT:
Intelligent tester only:
Malfunctioning areas can be identified by performing the A/F CONTROL function provided in the ACTIVE TEST. The A/F CONTROL function can help to determine whether the Air-Fuel Ratio (A/F) sensor, Heated Oxygen (HO2) sensor and other potential trouble areas are malfunctioning.
The following instructions describe how to conduct the A/F CONTROL operation using an intelligent tester.
(1) Connect an intelligent tester to the DLC3.
(2) Start the engine and turn the tester ON.
(3) Warm up the engine at an engine speed of 2,500 rpm for approximately 90 seconds.
(4) Select the following menu items: DIAGNOSIS / ENHANCED OBD II / ACTIVE TEST / A/F CONTROL.
(5) Perform the A/F CONTROL operation with the engine in an idling condition (press the RIGHT or LEFT button to change the fuel injection volume).
(6) Monitor the voltage outputs of the A/F and HO2 sensors (AFS B1S1 and O2S B1S2 or AFS B2S1 and O2S B2S2) displayed on the tester.
HINT:

- The A/F CONTROL operation lowers the fuel injection volume by 12.5 % or increases the injection volume by 25 %.
- Each sensor reacts in accordance with increases and decreases in the fuel injection volume.

Standard

Tester Display (Sensor)	Injection Volumes	Status	Voltages
AFS B1S1 or AFS B2S1 (A/F)	+25 %	Rich	Less than 3.0
AFS B1S1 or AFS B2S1 (A/F)	-12.5 %	Lean	More than 3.35

Tester Display (Sensor)	Injection Volumes	Status	Voltages
O2S B1S2 or O2S B2S2 (HO2)	+25 %	Rich	More than 0.55
O2S B1S2 or O2S B2S2 (HO2)	-12.5 %	Lean	Less than 0.4

NOTICE:
The Air-Fuel Ratio (A/F) sensor has an output delay of a few seconds and the Heated Oxygen (HO2) sensor has a maximum output delay of approximately 20 seconds.

Case	A/F Sensor (Sensor 1) Output Voltage		HO2 Sensor (Sensor 2) Output Voltage		Main Suspected Trouble Areas
1	Injection volume +25 % -12.5 %		Injection volume +25 % -12.5 %		-
	Output voltage More than 3.35 V Less than 3.0 V		Output voltage More than 0.55 V Less than 0.4 V		
2	Injection volume +25 % -12.5 %		Injection volume +25 % -12.5 %		• A/F sensor • A/F sensor heater • A/F sensor circuit
	Output voltage Almost no reaction	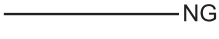	Output voltage More than 0.55 V Less than 0.4 V		
3	Injection volume +25 % -12.5 %		Injection volume +25 % -12.5 %		• HO2 sensor • HO2 sensor heater • HO2 sensor circuit
	Output voltage More than 3.35 V Less than 3.0 V		Output voltage Almost no reaction		
4	Injection volume +25 % -12.5 %		Injection volume +25 % -12.5 %		• Injector • Fuel pressure • Gas leakage from exhaust system (Air-fuel ratio extremely lean or rich)
	Output voltage Almost no reaction		Output voltage Almost no reaction		

- Following the A/F CONTROL procedure enables technicians to check and graph the voltage outputs of both the A/F and HO2 sensors.
- To display the graph, select the following menu items on the tester: DIAGNOSIS / ENHANCED OBD II / ACTIVE TEST / A/F CONTROL / USER DATA / AFS B1S1 and O2S B1S2 or AFS B2S1 and O2S B2S2, and press the YES button and then the ENTER button followed by the F4 button.

HINT:
Read freeze frame data using an intelligent tester. Freeze frame data record the engine condition when malfunctions are detected. When troubleshooting, freeze frame data can help determine if the vehicle was moving or stationary, if the engine was warmed up or not, if the air-fuel ratio was lean or rich, and other data, from the time the malfunction occurred.

1	**INSPECT AIR FUEL RATIO SENSOR (HEATER RESISTANCE) (See page ES-85)**

NG → **REPLACE AIR FUEL RATIO SENSOR**

OK

2	INSPECT AIR FUEL RATIO SENSOR HEATER RELAY (See page ES-86)

NG → REPLACE AIR FUEL RATIO SENSOR HEATER RELAY

OK

3	CHECK HARNESS AND CONNECTOR (A/F SENSOR - ECM) (See page ES-325)

NG → REPAIR OR REPLACE HARNESS OR CONNECTOR

OK

4	REPLACE AIR FUEL RATIO SENSOR

Replace the air fuel ratio sensor (See page EC-21).

NEXT

5	CHECK WHETHER DTC OUTPUT RECURS (DTC P2238, P2239, P2252 OR P2253)

(a) Connect the intelligent tester to the DLC3.
(b) Turn the ignition switch ON and turn the tester ON.
(c) Clear DTCs (See page ES-38).
(d) Start the engine.
(e) Allow the engine to idle for 5 minutes or more.
(f) Select the following menu items: DIAGNOSIS / ENHANCED OBD II / DTC INFO / PENDING CODES.
(g) Read pending DTCs.

Result

Display (DTC Output)	Proceed To
No output	A
P2238, P2239, P2252 or P2253	B

B → REPLACE ECM (See page ES-446)

A

END

ES

DTC	P2401	Evaporative Emission Leak Detection Pump Stuck OFF

DTC	P2402	Evaporative Emission Leak Detection Pump Stuck ON

DTC SUMMARY

DTCs	Monitoring Items	Malfunction Detection Conditions	Trouble Areas	Detection Timings	Detection Logic
P2401	Leak detection pump stuck OFF	P043E, P043F, P2401, P2402 and P2419 present when one of following conditions met during key-off EVAP monitor: • EVAP pressure just after reference pressure measurement greater than -1 kPa-g (-7.5 mmHg-g) • Reference pressure less than -4.85 kPa-g (-36.4 mmHg-g) • Reference pressure greater than -1.057 kPa-g (-7.93 mmHg-g) • Reference pressure not saturated • Reference pressure difference between first and second 0.7 kPa-g (5.25 mmHg-g) or more HINT: Typical example values	• Canister pump module (Reference orifice, leak detection pump, vent valve) • Connector/wire harness (Canister pump module - ECM) • EVAP system hose (pipe from air inlet port to canister pump module, canister filter, fuel tank vent hose) • ECM	While ignition switch OFF	2 trip
P2402	Leak detection pump stuck ON		• Canister pump module (Reference orifice, leak detection pump, vent valve) • Connector/wire harness (Canister pump module - ECM) • EVAP system hose (pipe from air inlet port to canister pump module, canister filter, fuel tank vent hose) • ECM	While ignition switch OFF	2 trip

HINT:
The leak detection pump is built into the canister pump module.

DESCRIPTION

The description can be found in the EVAP (Evaporative Emission) System (See page ES-352).

INSPECTION PROCEDURE

Refer to the EVAP System (See page ES-357).

MONITOR DESCRIPTION

5 hours* after the ignition switch is turned to OFF, the leak detection pump creates negative pressure (vacuum) in the EVAP system. The ECM monitors for leaks and actuator malfunctions based on the EVAP pressure.
HINT:
*: If the engine coolant temperature is not below 35°C (95°F) 5 hours after the ignition switch is turned to OFF, the monitor check starts 2 hours later. If it is still not below 35°C (95°F) 7 hours after the ignition switch is turned to OFF, the monitor check starts 2.5 hours later.

Sequence	Operations	Descriptions	Duration
-	ECM activation	Activated by soak timer, 5 hours (7 or 9.5 hours) after ignition switch turned to OFF.	-

Sequence	Operations	Descriptions	Duration
A	Atmospheric pressure measurement	Vent valve turned OFF (vent) and EVAP system pressure measured by ECM in order to register atmospheric pressure. If pressure in EVAP system not between 70 kPa-a and 110 kPa-a (525 mmHg-a and 825 mmHg-a), ECM cancels EVAP system monitor.	10 seconds
B	First reference pressure measurement	In order to determine reference pressure, leak detection pump creates negative pressure (vacuum) through reference orifice and then ECM checks if leak detection pump and vent valve operate normally.	60 seconds
C	EVAP system pressure measurement	Vent valve turned ON (closed) to shut EVAP system. Negative pressure (vacuum) created in EVAP system, and EVAP system pressure then measured. Write down measured value as will be used in leak check. If EVAP pressure does not stabilize within 15 minutes, ECM cancels EVAP system monitor.	15 minutes*
D	Purge VSV monitor	Purge VSV opened and then EVAP system pressure measured by ECM. Large increase indicates normality.	10 seconds
E	Second reference pressure measurement	After second reference pressure measurement, leak check performed by comparing first and second reference pressure. If stabilized system pressure higher than second reference pressure, ECM determines that EVAP system leaking.	60 seconds
F	Final check	Atmospheric pressure measured and then monitoring result recorded by ECM.	-

* If only a small amount of fuel is in the fuel tank, it takes longer for the EVAP pressure to stabilize.

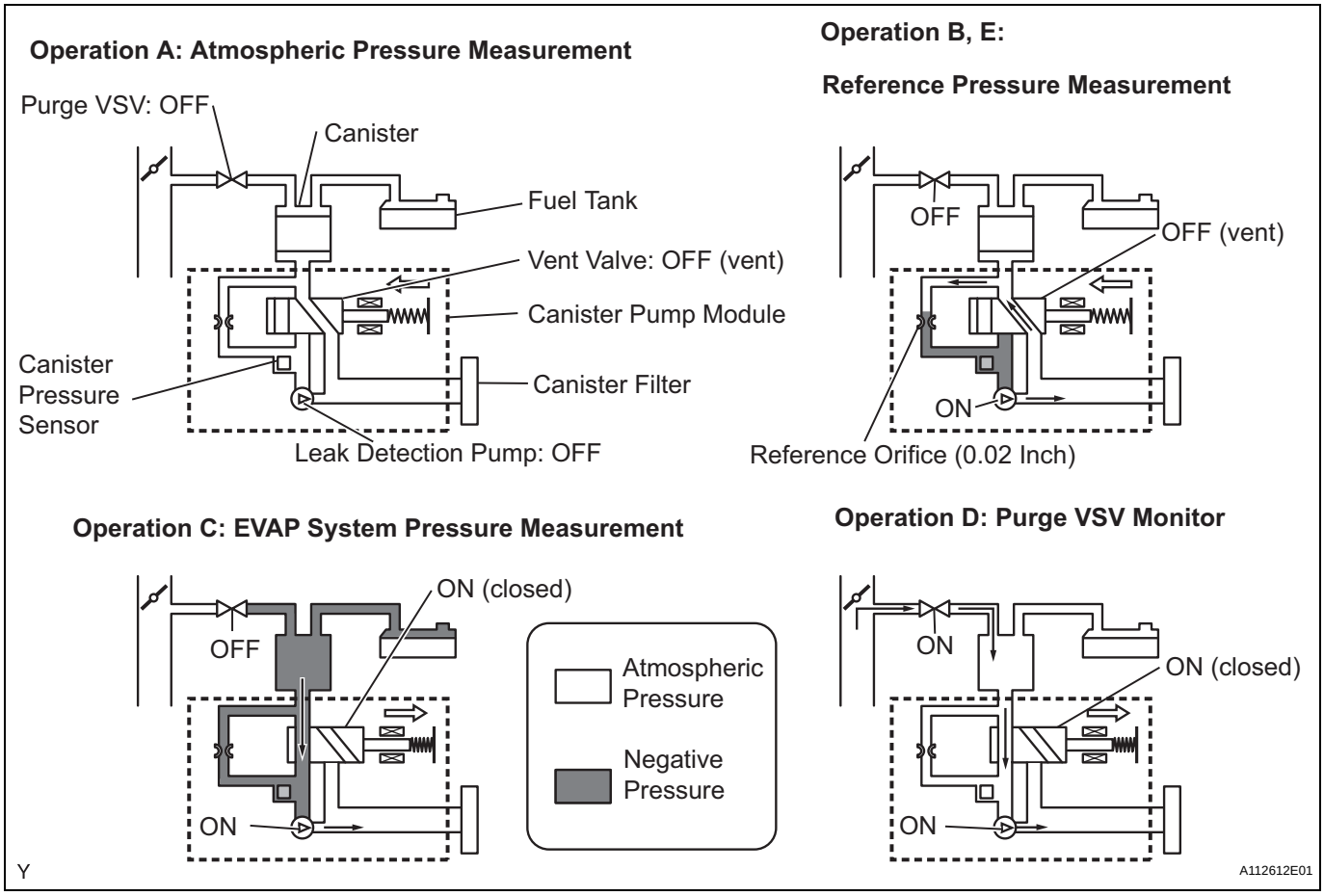

1. P2401: Leak detection pump stuck OFF
   In operation B, the leak detection pump creates negative pressure (a vacuum) through the reference orifice. The EVAP system pressure is then measured by the ECM, using the canister pressure sensor, to determine the reference pressure. If the pressure is higher than -1.057 kPa-g (-7.93 mmHg-g), or lower than -4.85 kPa-g (-36.4 mmHg-g), the ECM interprets this as the leak detection pump being stuck OFF (not operating). The ECM illuminates the MIL and sets the DTC (2 trip detection logic).

EVAP Pressure when Leak Detection Pump Stuck OFF:

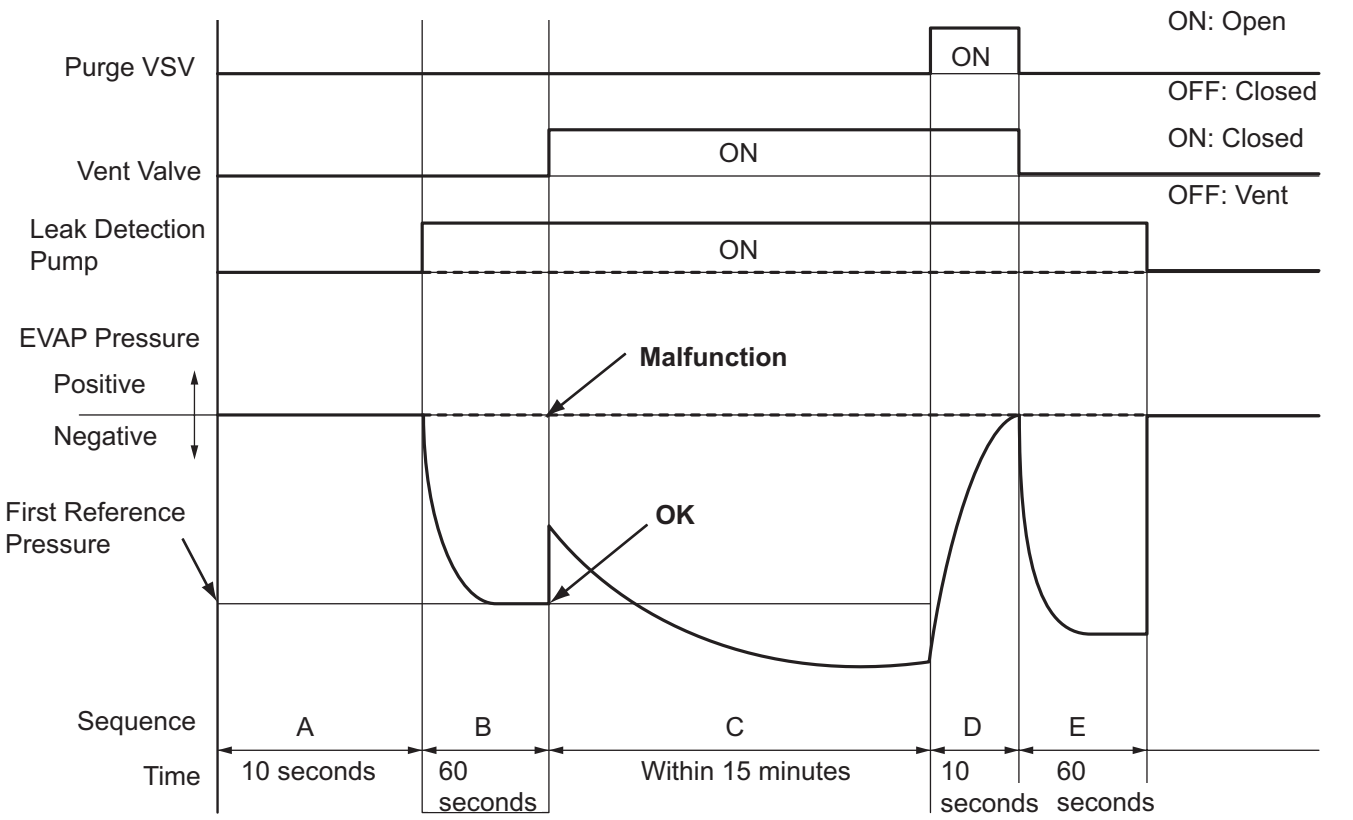

2. P2402: Leak detection pump stuck ON
In operation B, the leak detection pump creates negative pressure (a vacuum) through the reference orifice. The EVAP (Evaporative Emission) system pressure is then measured by the ECM, using the canister pressure sensor, to determine the reference pressure. If the pressure is higher than -1.057 kPa-g (-7.93 mmHg-g), or lower than -4.85 kPa-g (-36.4 mmHg-g), the ECM interprets this as the leak detection pump being stuck ON (remaining ON all the time). The ECM illuminates the MIL and sets the DTC (2 trip detection logic).

EVAP Pressure when Leak Detection Pump Stuck ON:

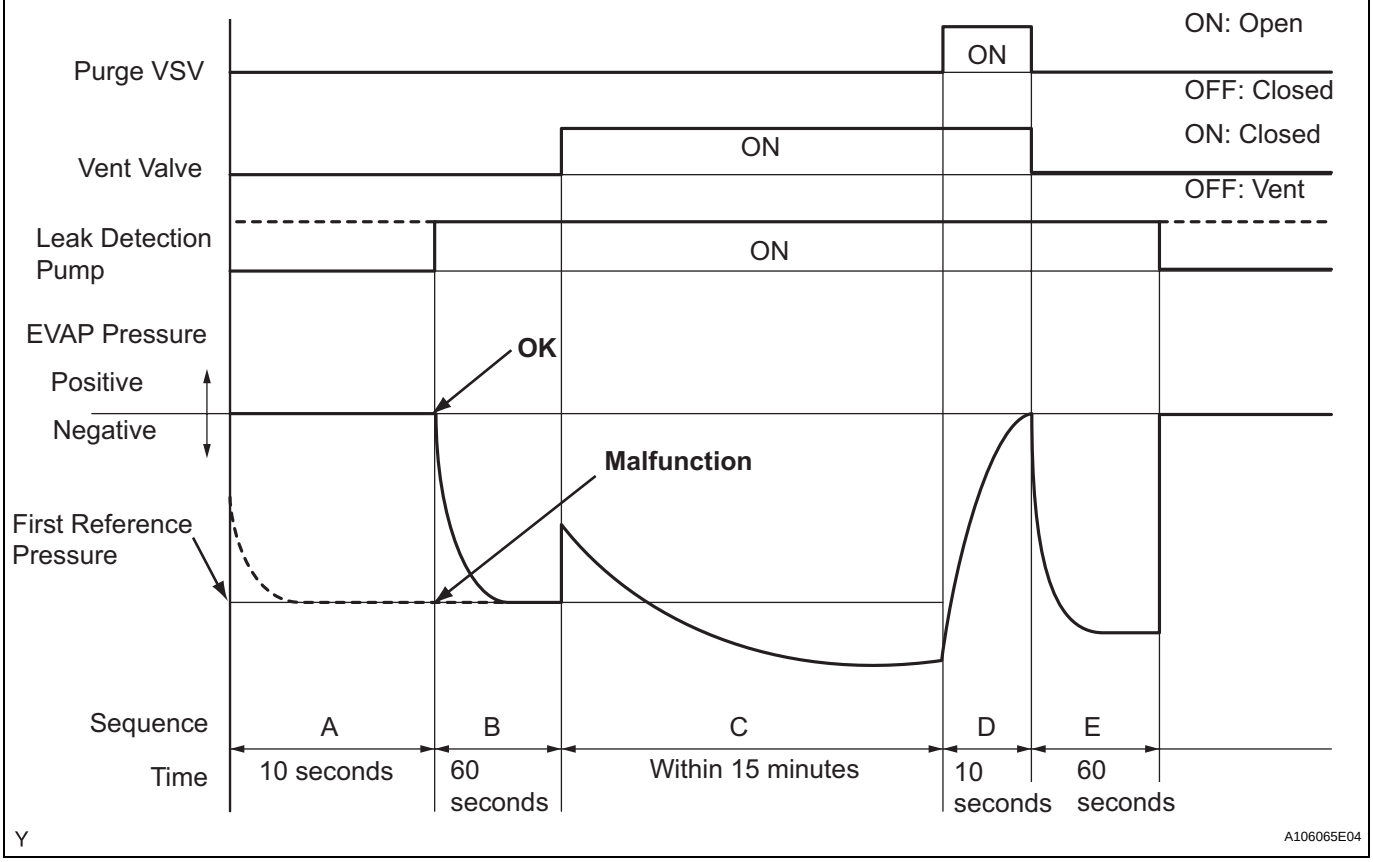

HINT:
The detection logic of DTCs P2401 and P2402 is the same because in both cases the reference pressure measured in operation B is compared to the atmospheric pressure registered in operation A. The ECM calculates the difference between these pressures by deducting [the reference pressure] from [the stored atmospheric pressure], and uses this to monitor the EVAP system pressure change.

MONITOR STRATEGY

Required Sensors/Components	Purge VSV and canister pump module
Frequency of Operation	Once per driving cycle
Duration	Within 2 minutes (varies with amount of fuel in tank)
MIL Operation	2 driving cycles
Sequence of Operation	None

TYPICAL ENABLING CONDITIONS

Monitor runs whenever following DTCs not present	None
EVAP key-off monitor runs when all of following conditions met	-
Atmospheric pressure	70 to 110 kPa-a (525 to 825 mmHg-a)
Battery voltage	10.5 V or more

Vehicle speed	Below 2.5 mph (4 km/h)
Ignition switch	OFF
Time after key off	5 or 7 or 9.5 hours
Canister pressure sensor malfunction (P0450, P0451, P0452 and P0453)	Not detected
Purge VSV	Not operated by scan tool
Vent valve	Not operated by scan tool
Leak detection pump	Not operated by scan tool
Both of following conditions met before key off	Conditions 1 and 2
1. Duration that vehicle driven	5 minutes or more
2. EVAP purge operation	Performed
ECT	4.4° to 35°C (40° to 95°F)
IAT	4.4°to 35°C (40° to 95°F)

ES

1. Key-off monitor sequence 1 to 8

1. Atmospheric pressure measurement

Next sequence run if following condition set	-
Atmospheric pressure change	Less than 0.3 kPa-g (2.25 mmHg-g) in 1 second

2. First reference pressure measurement

Next sequence run if all of following conditions set	Condition 1, 2 and 3
1. EVAP pressure just after reference pressure measurement start	-1 kPa-g (-7.5 mmHg-g) or less
2. Reference pressure	-4.85 to -1.057 kPa-g (-36.4 to -7.93 mmHg-g)
3. Reference pressure	Saturated within 60 seconds

3. Vent valve stuck closed check

Next sequence run if following condition set	-
EVAP pressure change after vent valve ON (closed)	0.3 kPa-g (2.25 mmHg-g) or more

4. Vacuum introduction

Next sequence run if following condition set	-
EVAP pressure	Saturated within 15 minutes

5. Purge VSV stuck closed check

Next sequence run if following condition set	-
EVAP pressure change after purge VSV ON (open)	0.3 kPa-g (2.25 mmHg-g) or more

6. Second reference pressure measurement

Next sequence run if all of following conditions set	Condition 1, 2, 3 and 4
1. EVAP pressure just after reference pressure	-1 kPa-g (-7.5 mmHg-g) or less
2. Reference pressure	-4.85 to -1.057 kPa-g (-36.4 to -7.93 mmHg-g)
3. Reference pressure	Saturated within 60 seconds
4. Reference pressure difference between first and second	Less than 0.7 kPa-g (5.25 mmHg-g)

7. Leak check

Next sequence run if following condition set	-
EVAP pressure when vacuum introduction complete	Second reference pressure or less

8. Atmospheric pressure measurement

EVAP monitor complete if following condition set	-
Atmospheric pressure difference between sequence 1 and 8	Within 0.3 kPa-g (2.25 mmHg-g)

TYPICAL MALFUNCTION THRESHOLDS

"Saturated" indicates that the EVAP pressure change is less than 0.286 kPa-g (2.14 mmHg-g) in 60 seconds.

One of following conditions met	-
EVAP pressure just after reference pressure measurement start	More than -1 kPa-g (-7.5 mmHg-g)
Reference pressure	Less than -4.85 kPa-g (-36.4 mmHg-g)
Reference pressure	-1.057 kPa-g (-7.93 mmHg-g) or more
Reference pressure	Not saturated within 60 seconds
Reference pressure difference between first and second	0.7 kPa-g (5.25 mmHg-g) or more

MONITOR RESULT

Refer to CHECKING MONITOR STATUS (See page ES-20).

DTC	P2419	Evaporative Emission System Switching Valve Control Circuit Low

DTC	P2420	Evaporative Emission System Switching Valve Control Circuit High

DTC SUMMARY

DTCs	Monitoring Items	Malfunction Detection Conditions	Trouble Areas	Detection Timings	Detection Logic
P2419	Vent valve stuck closed	P043E, P043F, P2401, P2402 and P2419 present when one of following conditions met during key-off EVAP monitor: • EVAP pressure just after reference pressure measurement greater than -1 kPa-g (-7.5 mmHg-g) • Reference pressure less than -4.85 kPa-g (-36.4 mmHg-g) • Reference pressure greater than -1.057 kPa-g (-7.93 mmHg-g) • Reference pressure not saturated • Reference pressure difference between first and second 0.7 kPa-g (5.25 mmHg-g) or more HINT: Typical example values	• Canister pump module (Reference orifice, leak detection pump, vent valve) • Connector/wire harness (Canister pump module - ECM) • EVAP system hose (pipe from air inlet port to canister pump module, canister filter, fuel tank vent hose) • ECM	While ignition switch OFF	2 trip
P2420	Vent valve stuck open (vent)	Following condition met during key-off EVAP monitor: • EVAP pressure change when vent valve closed (ON) less than 0.3 kPa-g (2.25 mmHg-g)	• Canister pump module (Reference orifice, leak detection pump, vent valve) • Connector/wire harness (Canister pump module - ECM) • ECM	While ignition switch OFF	2 trip

HINT:
The vent valve is built into the canister pump module.

DESCRIPTION

The description can be found in the EVAP (Evaporative Emission) System (See page ES-352).

INSPECTION PROCEDURE

Refer to the EVAP System (See page ES-357).

MONITOR DESCRIPTION

5 hours* after the ignition switch is turned to OFF, the leak detection pump creates negative pressure (vacuum) in the EVAP system. The ECM monitors for leaks and actuator malfunctions based on the EVAP pressure.
HINT:
*: If the engine coolant temperature is not below 35°C (95°F) 5 hours after the ignition switch is turned to OFF, the monitor check starts 2 hours later. If it is still not below 35°C (95°F) 7 hours after the ignition switch is turned to OFF, the monitor check starts 2.5 hours later.

Sequence	Operations	Descriptions	Duration
-	ECM activation	Activated by soak timer, 5 hours (7 or 9.5 hours) after ignition switch turned to OFF.	-

Sequence	Operations	Descriptions	Duration
A	Atmospheric pressure measurement	Vent valve turned OFF (vent) and EVAP system pressure measured by ECM in order to register atmospheric pressure. If pressure in EVAP system not between 70 kPa-a and 110 kPa-a (525 mmHg-a and 825 mmHg-a), ECM cancels EVAP system monitor.	10 seconds
B	First reference pressure measurement	In order to determine reference pressure, leak detection pump creates negative pressure (vacuum) through reference orifice and then ECM checks if leak detection pump and vent valve operate normally.	60 seconds
C	EVAP system pressure measurement	Vent valve turned ON (closed) to shut EVAP system. Negative pressure (vacuum) created in EVAP system, and EVAP system pressure then measured. Write down measured value as will be used in leak check. If EVAP pressure does not stabilize within 15 minutes, ECM cancels EVAP system monitor.	15 minutes*
D	Purge VSV monitor	Purge VSV opened and then EVAP system pressure measured by ECM. Large increase indicates normality.	10 seconds
E	Second reference pressure measurement	After second reference pressure measurement, leak check performed by comparing first and second reference pressure. If stabilized system pressure higher than second reference pressure, ECM determines that EVAP system leaking.	60 seconds
F	Final check	Atmospheric pressure measured and then monitoring result recorded by ECM.	-

* If only a small amount of fuel is in the fuel tank, it takes longer for the EVAP pressure to stabilize.

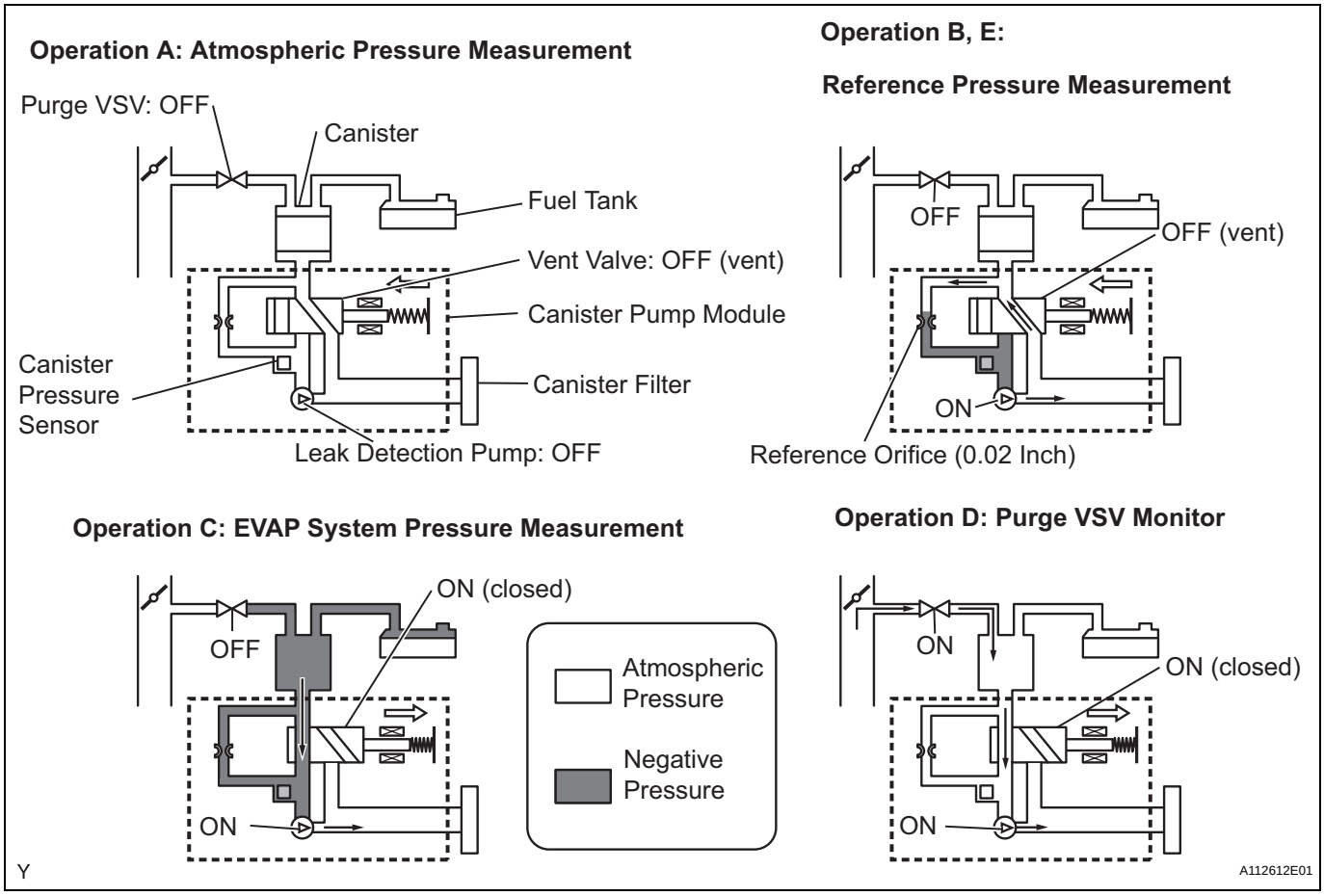

1. P2419: Vent valve stuck closed
   In operation B, the leak detection pump creates negative pressure (a vacuum) through the reference orifice. The EVAP system pressure is then measured by the ECM, using the canister pressure sensor, to determine the reference pressure. If the pressure exceeds -1.057 kPa-g (-7.93 mmHg-g) 4 seconds after the leak detection pump is turned ON, the ECM interprets this as the vent valve being stuck closed.
   The ECM illuminates the MIL and sets the DTC (2 trip detection logic).

EVAP Pressure when Vent Valve Stuck ON:

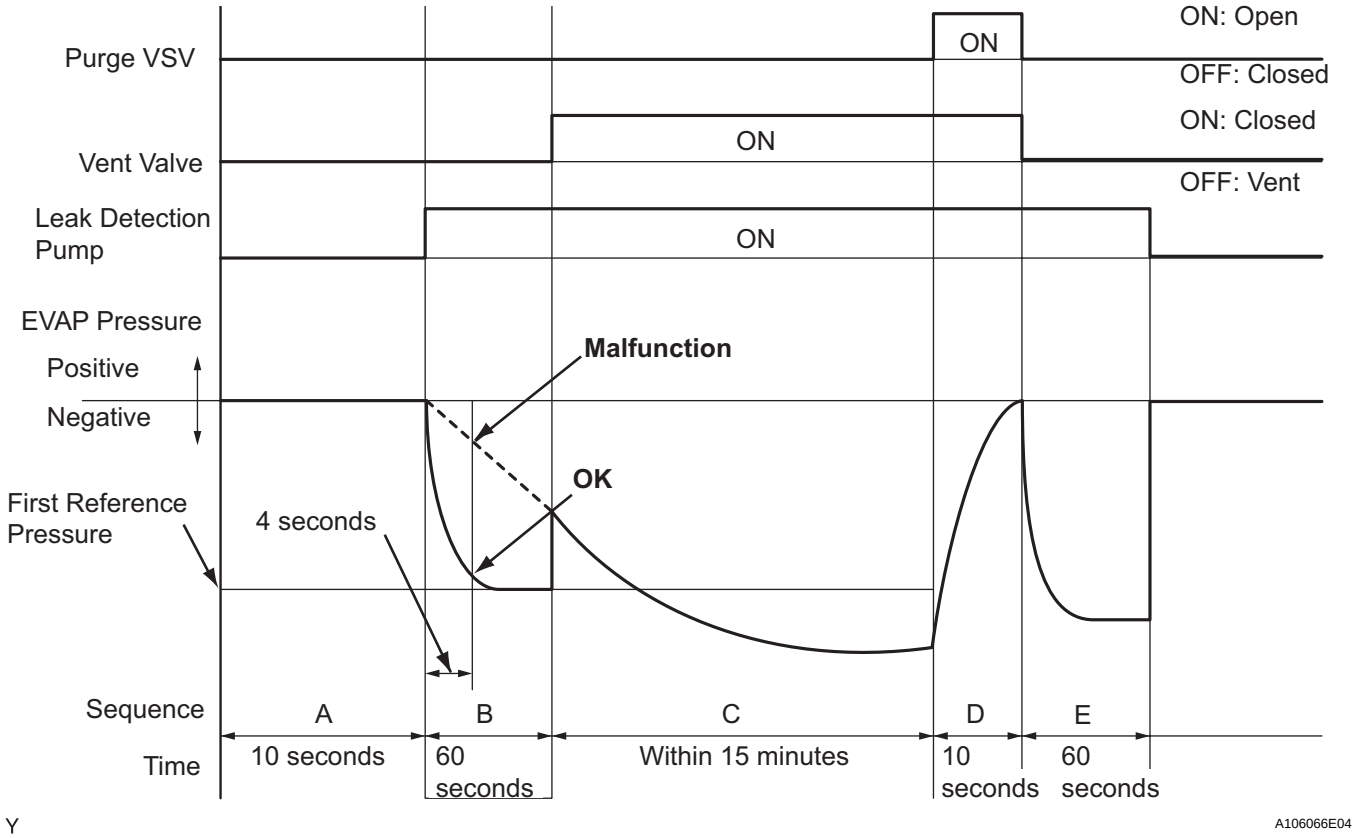

2. P2420: Vent valve stuck open (vent)
In operation C, the vent valve turns ON (closes) and the EVAP system pressure is then measured by the ECM, using the canister pressure sensor, to conduct an EVAP leak check. If the pressure does not increase when the vent valve is open, the ECM interprets this as the vent valve being stuck open. The ECM illuminates the MIL and sets the DTC.

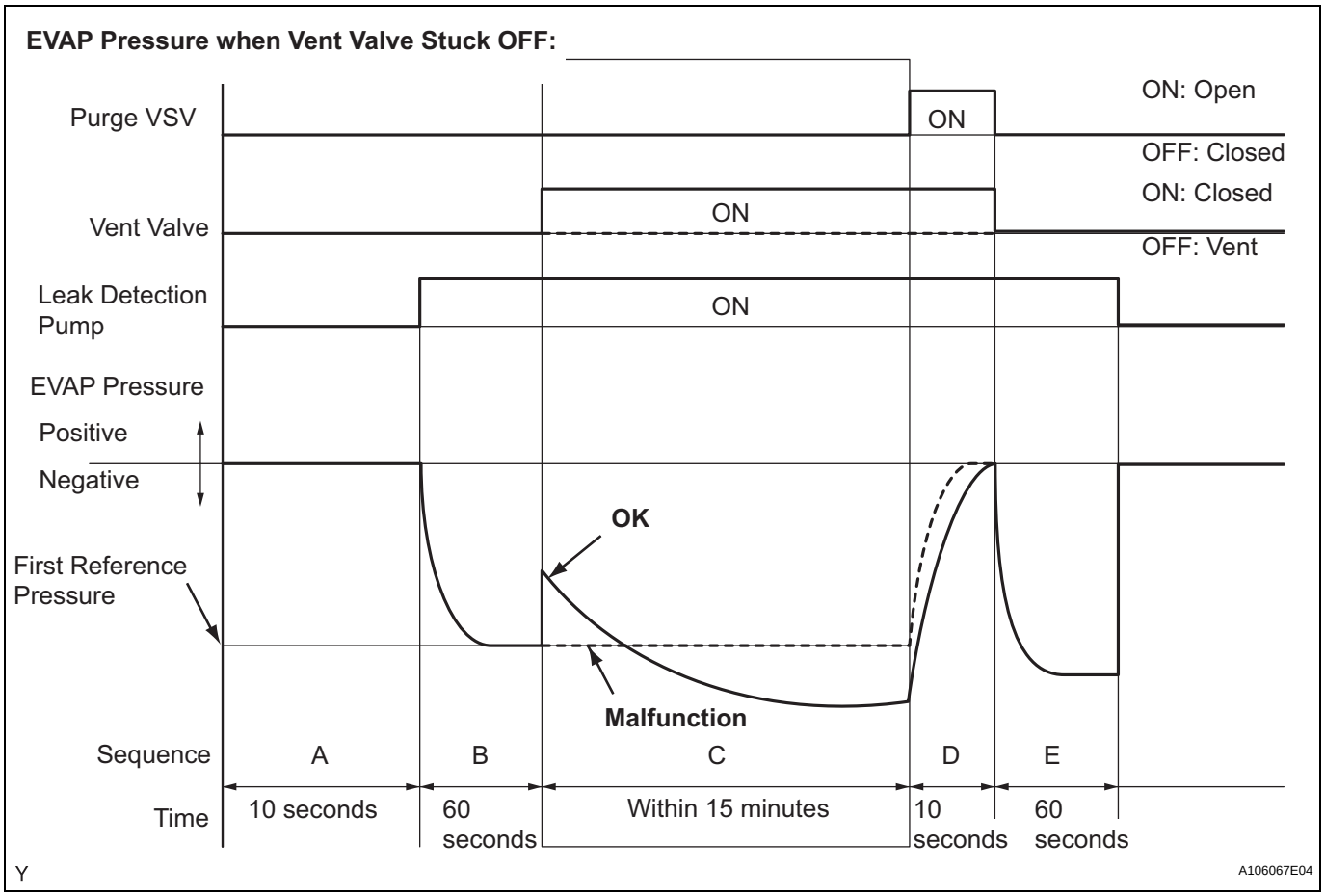

MONITOR STRATEGY

Required Sensors/Components	Purge VSV and canister pump module
Frequency of Operation	Once per driving cycle
Duration	Within 15 minutes (varies with amount of fuel in tank)
MIL Operation	2 driving cycles
Sequence of Operation	None

TYPICAL ENABLING CONDITIONS

Monitor runs whenever following DTCs not present	None
EVAP key-off monitor runs when all of following conditions met	-
Atmospheric pressure	70 to 110 kPa-a (525 to 825 mmHg-a)
Battery voltage	10.5 V or more
Vehicle speed	Below 2.5 mph (4 km/h)
Ignition switch	OFF
Time after key off	5 or 7 or 9.5 hours
Canister pressure sensor malfunction (P0450, P0451, P0452 and P0453)	Not detected
Purge VSV	Not operated by scan tool
Vent valve	Not operated by scan tool

Leak detection pump	Not operated by scan tool
Both of following conditions met before key off	Conditions 1 and 2
1. Duration that vehicle driven	5 minutes or more
2. EVAP purge operation	Performed
ECT	4.4° to 35°C (40° to 95°F)
IAT	4.4°to 35°C (40° to 95°F)

1. Key-off monitor sequence 1 to 8

1. Atmospheric pressure measurement

Next sequence run if following condition set	-
Atmospheric pressure change	Less than 0.3 kPa-g (2.25 mmHg-g) in 1 second

2. First reference pressure measurement

Next sequence run if all of following conditions set	Condition 1, 2 and 3
1. EVAP pressure just after reference pressure measurement start	-1 kPa-g (-7.5 mmHg-g) or less
2. Reference pressure	-4.85 to -1.057 kPa-g (-36.4 to -7.93 mmHg-g)
3. Reference pressure	Saturated within 60 seconds

3. Vent valve stuck closed check

Next sequence run if following condition set	-
EVAP pressure change after vent valve ON (closed)	0.3 kPa-g (2.25 mmHg-g) or more

4. Vacuum introduction

Next sequence run if following condition set	-
EVAP pressure	Saturated within 15 minutes

5. Purge VSV stuck closed check

Next sequence run if following condition set	-
EVAP pressure change after purge VSV ON (open)	0.3 kPa-g (2.25 mmHg-g) or more

6. Second reference pressure measurement

Next sequence run if all of following conditions set	Condition 1, 2, 3 and 4
1. EVAP pressure just after reference pressure	-1 kPa-g (-7.5 mmHg-g) or less
2. Reference pressure	-4.85 to -1.057 kPa-g (-36.4 to -7.93 mmHg-g)
3. Reference pressure	Saturated within 60 seconds
4. Reference pressure difference between first and second	Less than 0.7 kPa-g (5.25 mmHg-g)

7. Leak check

Next sequence run if following condition set	-
EVAP pressure when vacuum introduction complete	Second reference pressure or less

8. Atmospheric pressure measurement

EVAP monitor complete if following condition set	-
Atmospheric pressure difference between sequence 1 and 8	Within 0.3 kPa-g (2.25 mmHg-g)

TYPICAL MALFUNCTION THRESHOLDS

"Saturated" indicates that the EVAP pressure change is less than 0.286 kPa-g (2.14 mmHg-g) in 60 seconds.

P2419: Vent valve stuck closed

One of following conditions set	-
EVAP pressure just after reference pressure measurement start	More than -1 kPa-g (-7.5 mmHg-g)
Reference pressure	Less than -4.85 kPa-g (-36.4 mmHg-g)
Reference pressure	-1.057 kPa-g (-7.93 mmHg-g) or more
Reference pressure	Not saturated within 60 seconds

Reference pressure difference between first and second	0.7 kPa-g (5.25 mmHg-g) or more

P2420: Vent valve stuck open (vent)

EVAP pressure change after EVAP canister vent valve ON	Less than 0.3 kPa-g (2.25 mmHg-g)

MONITOR RESULT

Refer to CHECKING MONITOR STATUS (See page ES-20).

DTC	P2610	ECM / PCM Internal Engine Off Timer Performance

DTC SUMMARY

DTC	Monitoring Items	Malfunction Detection Conditions	Trouble Areas	Detection Timings	Detection Logic
P2610	Soak timer (built into ECM)	ECM internal malfunction	ECM	Engine running	2 trip

DESCRIPTION

ES

To ensure the accuracy of the EVAP (Evaporative Emission) monitor values, the soak timer, which is built into the ECM, measures 5 hours (+-15 minutes) from when the ignition switch is turned OFF, before the monitor is run. This allows the fuel to cool down, which stabilizes the EVAP pressure. When 5 hours have elapsed, the ECM turns on.

Soak Timer Circuit:

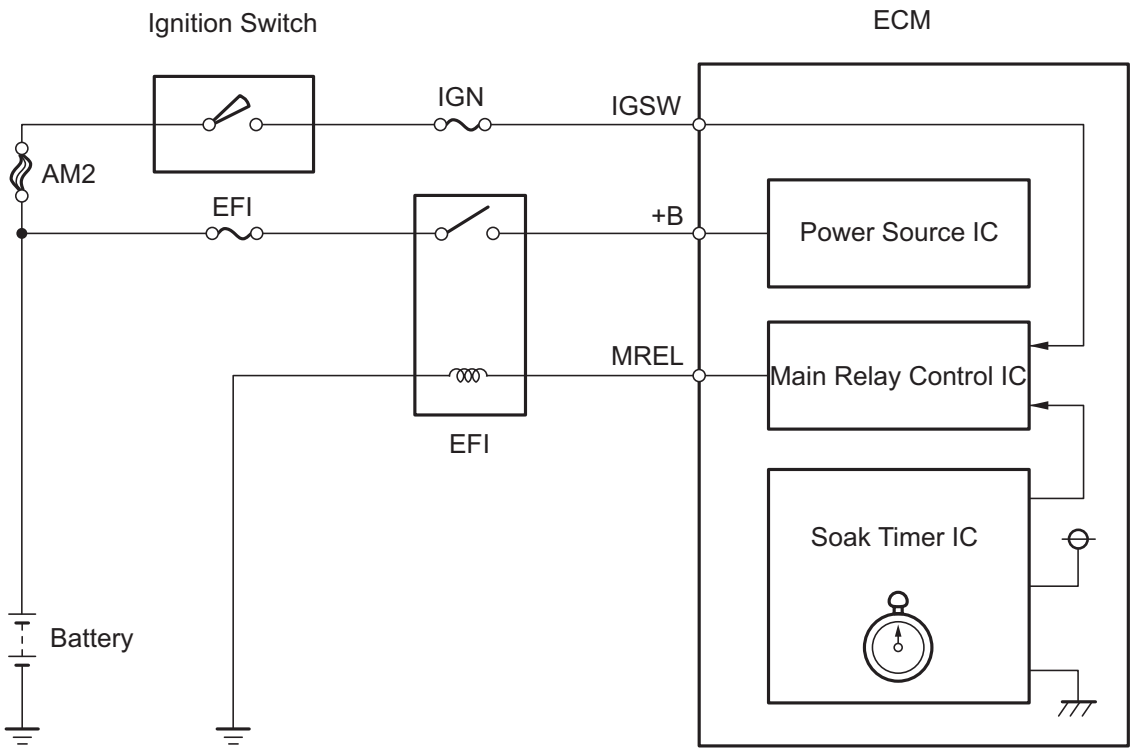

MONITOR DESCRIPTION

5 hours after the ignition switch is turned OFF, the soak timer activates the ECM to begin the EVAP system monitor. While the engine is running, the ECM monitors the synchronization of the soak timer and the CPU clock. If these two are not synchronized, the ECM interprets this as a malfunction, illuminates the MIL and sets the DTC (2 trip detection logic).

MONITOR STRATEGY

Required Sensors/Components	ECM
Frequency of Operation	Once per driving cycle

Duration	10 minutes
MIL Operation	2 driving cycles
Sequence of Operation	None

TYPICAL ENABLING CONDITIONS

Monitor runs whenever following DTC not present	None
Ignition switch	ON
Engine	Running
Battery voltage	8 V or more
Starter	OFF

TYPICAL MALFUNCTION THRESHOLDS

Soak timer measurement when ECM CPU clock counts 10 minutes	Less than 7 minutes, or more than 13 minutes

INSPECTION PROCEDURE

HINT:

- DTC P2610 is set if an internal ECM problem is detected. Diagnostic procedures are not required. ECM replacement is necessary.
- Read freeze frame data using an intelligent tester. Freeze frame data record the engine condition when malfunctions are detected. When troubleshooting, freeze frame data can help determine if the vehicle was moving or stationary, if the engine was warmed up or not, if the air-fuel ratio was lean or rich, and other data, from the time the malfunction occurred.

1	**REPLACE ECM**

(a) Replace the ECM (See page ES-446).

NEXT

2	**CHECK WHETHER DTC OUTPUT RECURS (DTC P2610)**

(a) Connect an intelligent tester to the DLC3.
(b) Turn the ignition switch ON.
(c) Turn the tester ON.
(d) Clear DTCs (See page ES-38).
(e) Start the engine and wait for 10 minutes or more.
(f) Select the following menu items: DIAGNOSIS / ENHANCED OBD II / DTC / INFO / PENDING CODES.
(g) If no pending DTC is displayed, the repair has been successfully completed.

NEXT

END

DTC	P2A00	A/F Sensor Circuit Slow Response (Bank 1 Sensor 1)

DTC	P2A03	A/F Sensor Circuit Slow Response (Bank 2 Sensor 1)

HINT:
- DTC P2A00 indicates malfunctions related to the bank 1 A/F sensor.
- DTC P2A03 indicates malfunctions related to the bank 2 A/F sensor.
- Bank 1 refers to the bank that includes cylinder No. 1.
- Bank 2 refers to the bank that includes cylinder No. 2.
- Sensor 1 refers to the sensor mounted in front of the Three-Way Catalytic Converter (TWC) and located near the engine assembly.

DESCRIPTION

Refer to DTC P2195 (See page ES-307).

DTC No.	DTC Detection Conditions	Trouble Areas
P2A00 P2A03	Calculated value for air-fuel ratio (A/F) sensor response rate deterioration level is less than threshold	• Open or short in A/F sensor (bank 1, 2 sensor 1) circuit • A/F sensor • A/F sensor heater • ECM

MONITOR DESCRIPTION

After engine is warmed up, the ECM performs air-fuel ratio feedback control to maintain the air-fuel ratio at the stoichiometric level. In addition, active A/F control is performed for approximately 10 seconds after preconditions are met in order to measure the A/F sensor response rate. During active A/F control, the ECM forcibly increases and decreases the injection volume a certain amount, based on the stoichiometric air-fuel ratio learned during normal air-fuel ratio control, and measures the A/F sensor response rate. The ECM receives a signal from the A/F sensor while performing active A/F control and uses it to calculate the A/F sensor response rate deterioration level.
If the value for A/F sensor response rate deterioration level is less than the threshold, the ECM interprets this as a malfunction and sets the DTC.

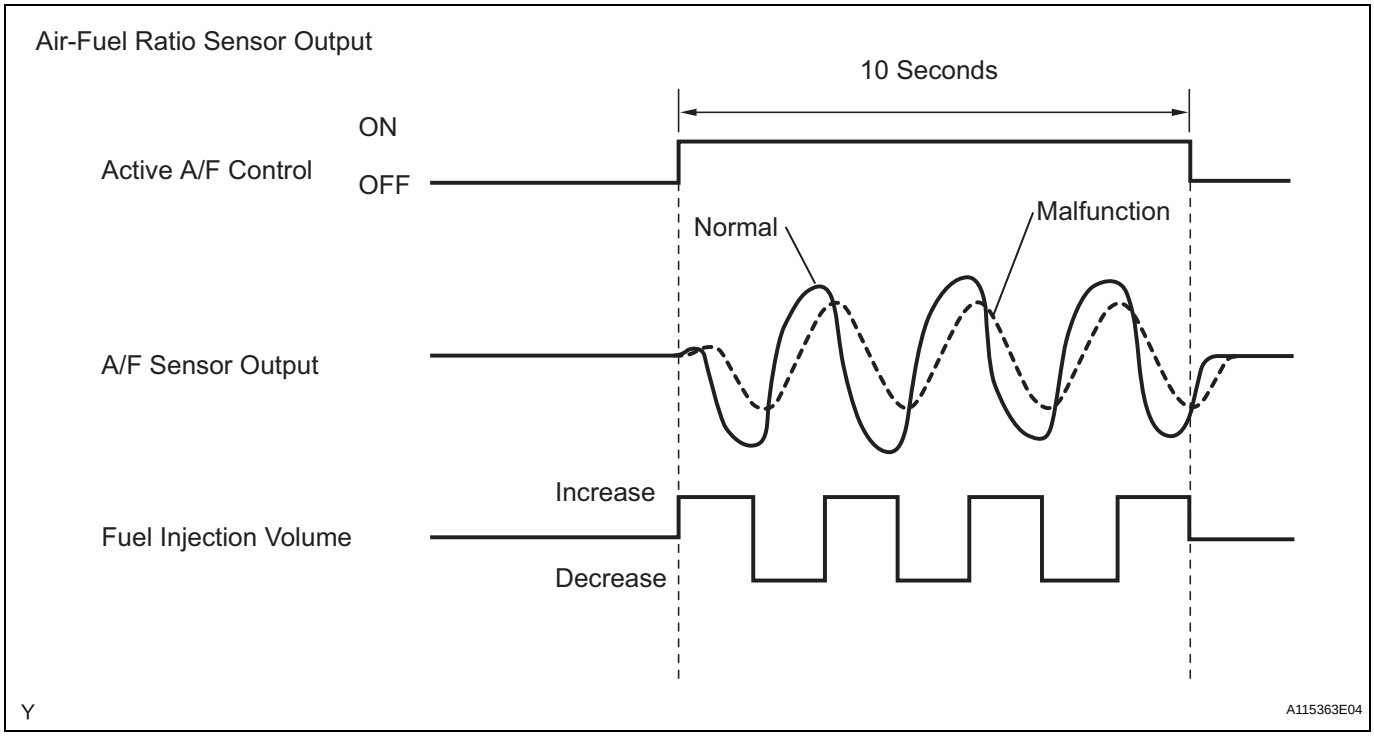

CONFIRMATION DRIVING PATTERN

HINT:

Performing this confirmation pattern will activate the A/F sensor response monitor.

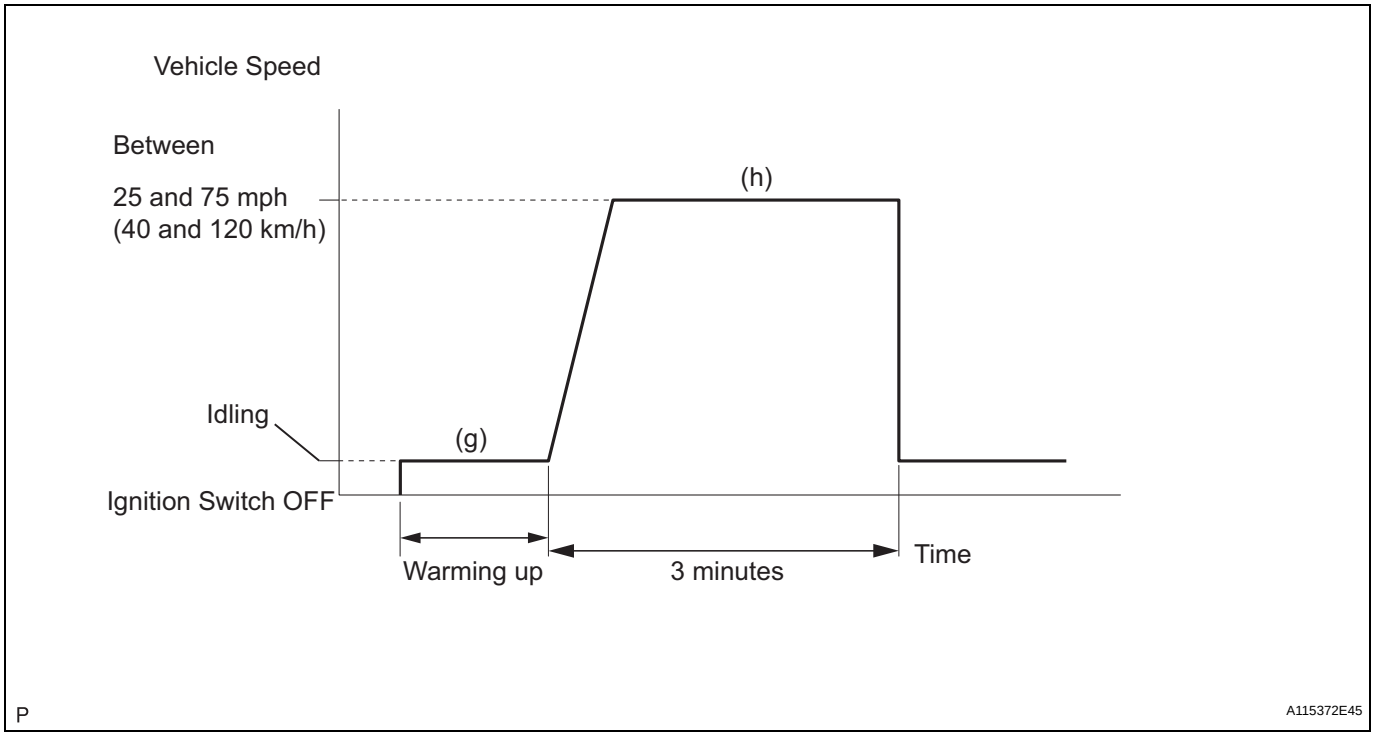

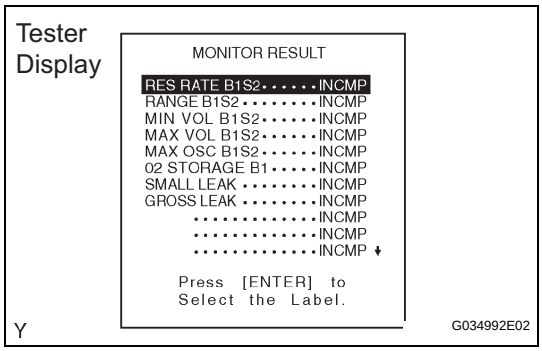

(a) Connect an intelligent tester to the DLC3.
(b) Turn the ignition switch ON.
(c) Turn the tester ON.
(d) Clear DTCs (See page ES-38).
(e) Select the following menu items: DIAGNOSIS /ENHANCED OBD II / MONITOR INFO / MONITOR RESULT.
(f) Check that RES RATE B1S1 and RES RATE B2S1 are INCOMPL.
(g) Start the engine and warm it up.
(h) Drive the vehicle at between 25 mph and 75 mph (40 km/h and 120 km/h) for 3 minutes. However, the vehicle should be driven at a constant speed.
(i) Check the monitor result values on an intelligent tester by selecting the following menu items: DIAGNOSIS / ENHANCED OBD II / MONITOR INFO / MONITOR RESULT / RES RATE B1S1 and RES RATE B2S1.
(j) If the values indicated on the tester do not change, perform READINESS MONITOR DRIVE PATTERN for the A/F sensor and the heated oxygen sensor (See page ES-23).
HINT:
Completion of all A/F sensor monitors is required to change the value in RES RATE B1S1 and RES RATE B2S1.
(k) Note the value of the RES RATE B1S1 and RES RATE B2S1.
(l) Select the following menu items: DIAGNOSIS / ENHANCED OBD II / DTC INFO / PENDING CODES.
(m) Check if any DTCs (any pending DTCs) are set.

MONITOR STRATEGY

Related DTCs	P2A00: A/F sensor (Bank 1) slow response P2A03: A/F sensor (Bank 2) slow response
Required Sensors/Components (Main)	A/F sensor
Required Sensors/Components (Related)	Vehicle speed sensor, Crankshaft position sensor
Frequency of Operation	Once per driving cycle
Duration	10 to 15 seconds
MIL Operation	2 driving cycles
Sequence of Operation	None

TYPICAL ENABLING CONDITIONS

Monitor runs whenever following DTCs not present	P0031, P0032, P0051, P0052 (A/F sensor heater - Sensor 1) P0100 - P0103 (MAF meter) P0110 - P0113 (IAT sensor) P0115 - P0118 (ECT sensor) P0120 - P0223, P2135 (TP sensor) P0125 (Insufficient ECT for Closed Loop) P0171, P0172 (Fuel system) P0300 - P0306 (Misfire) P0335 (CKP sensor) P0340, P0341 (CMP sensor) P0455, P0456 (EVAP system) P0500 (VSS) P2196, P2198 (A/F sensor - rationality)
Active A/F control	Performing
Active A/F control performed when following conditions met	-
Battery voltage	11 V or more
Engine coolant temperature	75°C (167°F) or more
Idling	OFF
Engine RPM	Less than 4,000 rpm
A/F sensor status	Activated
Fuel-cut	OFF
Engine load	10 to 70 %
Shift position	2 or more
Catalyst monitor	Not yet
Intake air amount	3 to 10.5 g/sec

ES

TYPICAL MALFUNCTION THRESHOLDS

Response rate deterioration level	Less than 0.2 V

MONITOR RESULT

Refer to CHECKING MONITOR STATUS (See page ES-20).

WIRING DIAGRAM

Refer to DTC P2195 (See page ES-312).

INSPECTION PROCEDURE

HINT:

Malfunctioning areas can be identified by performing the A/F CONTROL function provided in the ACTIVE TEST. The A/F CONTROL function can help to determine whether the Air-Fuel Ratio (A/F) sensor, Heated Oxygen (HO2) sensor and other potential trouble areas are malfunctioning.

The following instructions describe how to conduct the A/F CONTROL operation using an intelligent tester.

(1) Connect an intelligent tester to the DLC3.
(2) Start the engine and turn the tester ON.
(3) Warm up the engine at an engine speed of 2,500 rpm for approximately 90 seconds.
(4) Select the following menu items: DIAGNOSIS / ENHANCED OBD II / ACTIVE TEST / A/F CONTROL.
(5) Perform the A/F CONTROL operation with the engine in an idling condition (press the RIGHT or LEFT button to change the fuel injection volume).
(6) Monitor the voltage outputs of the A/F and HO2 sensors (AFS B1S1 and O2S B1S2 or AFS B2S1 and O2S B2S2) displayed on the tester.

HINT:
- The A/F CONTROL operation lowers the fuel injection volume by 12.5 % or increases the injection volume by 25 %.
- Each sensor reacts in accordance with increases and decreases in the fuel injection volume.

Standard

Tester Display (Sensor)	Injection Volumes	Status	Voltages
AFS B1S1 or AFS B2S1 (A/F)	+25 %	Rich	Less than 3.0
AFS B1S1 or AFS B2S1 (A/F)	-12.5 %	Lean	More than 3.35
O2S B1S2 or O2S B2S2 (HO2)	+25 %	Rich	More than 0.55
O2S B1S2 or O2S B2S2 (HO2)	-12.5 %	Lean	Less than 0.4

ES

NOTICE:
The Air-Fuel Ratio (A/F) sensor has an output delay of a few seconds and the Heated Oxygen (HO2) sensor has a maximum output delay of approximately 20 seconds.

Case	A/F Sensor (Sensor 1) Output Voltage		HO2 Sensor (Sensor 2) Output Voltage		Main Suspected Trouble Area
1	Injection volume +25 % -12.5 %		Injection volume +25 % -12.5 %		-
	Output voltage More than 3.35 V Less than 3.0 V		Output voltage More than 0.55 V Less than 0.4 V		
2	Injection volume +25 % -12.5 %		Injection volume +25 % -12.5 %		• A/F sensor • A/F sensor heater • A/F sensor circuit
	Output voltage Almost no reaction		Output voltage More than 0.55 V Less than 0.4 V		
3	Injection volume +25 % -12.5 %		Injection volume +25 % -12.5 %		• HO2 sensor • HO2 sensor heater • HO2 sensor circuit
	Output voltage More than 3.35 V Less than 3.0 V		Output voltage Almost no reaction		
4	Injection volume +25 % -12.5 %		Injection volume +25 % -12.5 %		• Injector • Fuel pressure • Gas leakage from exhaust system (Air-fuel ratio extremely lean or rich)
	Output voltage Almost no reaction		Output voltage Almost no reaction	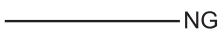	

- To display the graph, select the following menu items on the tester: DIAGNOSIS / ENHANCED OBD II / ACTIVE TEST / A/F CONTROL / USER DATA / AFS B1S1 and O2S B1S2 or AFS B2S1 and O2S B2S2, and press the YES button and then the ENTER button followed by the F4 button.
- Following the A/F CONTROL procedure enables technicians to check and graph the voltage outputs of both the A/F and HO2 sensors.

HINT:
- DTC P2A00 or P2A03 may be also set, when the air-fuel ratio is stuck rich or lean.

- A low A/F sensor voltage could be caused by a rich air-fuel mixture. Check for conditions that would cause the engine to run rich.
- A high A/F sensor voltage could be caused by a lean air-fuel mixture. Check for conditions that would cause the engine to run lean.
- Read freeze frame data using an intelligent tester. Freeze frame data record the engine condition when malfunctions are detected. When troubleshooting, freeze frame data can help determine if the vehicle was moving or stationary, if the engine was warmed up or not, if the air-fuel ratio was lean or rich, and other data, from the time the malfunction occurred.

1 **CHECK ANY OTHER DTCS OUTPUT (IN ADDITION TO DTC P2A00 AND/OR P2A03)**

(a) Connect an intelligent tester to the DLC3.
(b) Turn the ignition switch ON.
(c) Turn the tester ON.
(d) Select the following menu items: DIAGNOSIS / ENHANCED OBD II / DTC INFO / CURRENT CODES.
(e) Read DTCs.

ES

Result

Display (DTC Output)	Proceed To
P2A00 and/or P2A03	A
P2A00 and/or P2A03 and other DTCs	B

HINT:
If any DTCs other than P2A00 or P2A03 are output, troubleshoot those DTCs first.

B → **GO TO DTC CHART (See page ES-57)**

A

2 **INSPECT AIR FUEL RATIO SENSOR (HEATER RESISTANCE) (See page ES-85)**

NG → **REPLACE AIR FUEL RATIO SENSOR (See page EC-21)**

OK

3 **CHECK HARNESS AND CONNECTOR (A/F SENSOR - ECM) (See page ES-325)**

NG → **REPAIR OR REPLACE HARNESS OR CONNECTOR**

OK

4 **PERFORM CONFIRMATION DRIVING PATTERN**

NEXT

5	CHECK WHETHER DTC OUTPUT RECURS (DTC P2A00 AND/OR P2A03)

(a) Connect an intelligent tester to the DLC3.
(b) Turn the ignition switch ON and turn the tester ON.
(c) Select the following menu items: DIAGNOSIS / ENHANCED OBD II / DTC INFO / CURRENT CODES.
(d) Read DTCs.

Result

Display (DTC Output)	Proceed To
P2A00 and/or P2A03	A
No output	B

ES

B → CHECK FOR INTERMITTENT PROBLEMS

A

6	REPLACE AIR FUEL RATIO SENSOR

Replace the air fuel ratio sensor (See page EC-21).

NEXT

7	PERFORM CONFIRMATION DRIVING PATTERN

NEXT

8	CHECK WHETHER DTC OUTPUT RECURS (DTC P2A00 AND/OR P2A03)

(a) Connect an intelligent tester to the DLC3.
(b) Turn the ignition switch ON and turn the tester ON.
(c) Select the following menu items: DIAGNOSIS / ENHANCED OBD II / DTC INFO / CURRENT CODES.
(d) Read DTCs.

Result

Display (DTC Output)	Proceed To
No output	A
P2A00 and/or P2A03	B

B → CHECK EXTREMELY RICH OR LEAN ACTUAL AIR FUEL RATIO (REFER TO DTC P0171 PROCEDURE)

A

END

EVAP System

RELATED DTCS

DTCs	Monitoring Items	See Page
P043E	Reference orifice clogged (built into canister pump module)	ES-218
P043F	Reference orifice high-flow (built into canister pump module)	
P0441	• Purge VSV (Vacuum Switching Valve) stuck closed • Purge VSV stuck open • Purge flow	ES-223
P0450	Canister pressure sensor (built into canister pump module) voltage abnormal fluctuation	ES-230
P0451	• Canister pressure sensor (built into canister pump module) noise • Canister pressure sensor (built into canister pump module) signal becomes fixed/flat	
P0452	Canister pressure sensor (built into canister pump module) voltage low	
P0453	Canister pressure sensor (built into canister pump module) voltage high	
P0455	EVAP gross leak	ES-239
P0456	EVAP small leak	
P2401	Leak detection pump stuck OFF (built into canister pump module)	ES-329
P2402	Leak detection pump stuck ON (built into canister pump module)	
P2419	Vent valve stuck closed (built into canister pump module)	ES-335
P2420	Vent valve stuck open (vent) (built into canister pump module)	
P2610	Soak timer (built into ECM)	ES-341

If any EVAP system DTCs are set, the malfunctioning area can be determined using the table below.

DTCs / Malfunctioning Areas	P043E P043F	P0441	P0450	P0451	P0452	P0453	P0455	P0456	P2401 P2402	P2419	P2420
Reference orifice clogged	●								●	●	
Reference orifice high-flow	●								●	●	
Purge VSV stuck open		●					●				
Purge VSV stuck closed		●									
Canister pressure sensor fixed output				●							
Canister pressure sensor noise				●							
Canister pressure sensor low output			●		●						
Canister pressure sensor high output			●			●					
Gross leak		●					●				
Small leak								●			
Leak detection pump stuck OFF	●								●	●	
Leak detection pump stuck ON	●								●	●	
Vent valve stuck closed	●								●	●	
Vent valve stuck open (vent)											●

Y

A106731E11

NOTICE:
If the reference pressure difference between the first and second checks is greater than the specification, all the DTCs relating to the reference pressure (P043E, P043F, P2401, P2402 and P2419) are stored.

DESCRIPTION

Location of EVAP (Evaporative Emission) System:

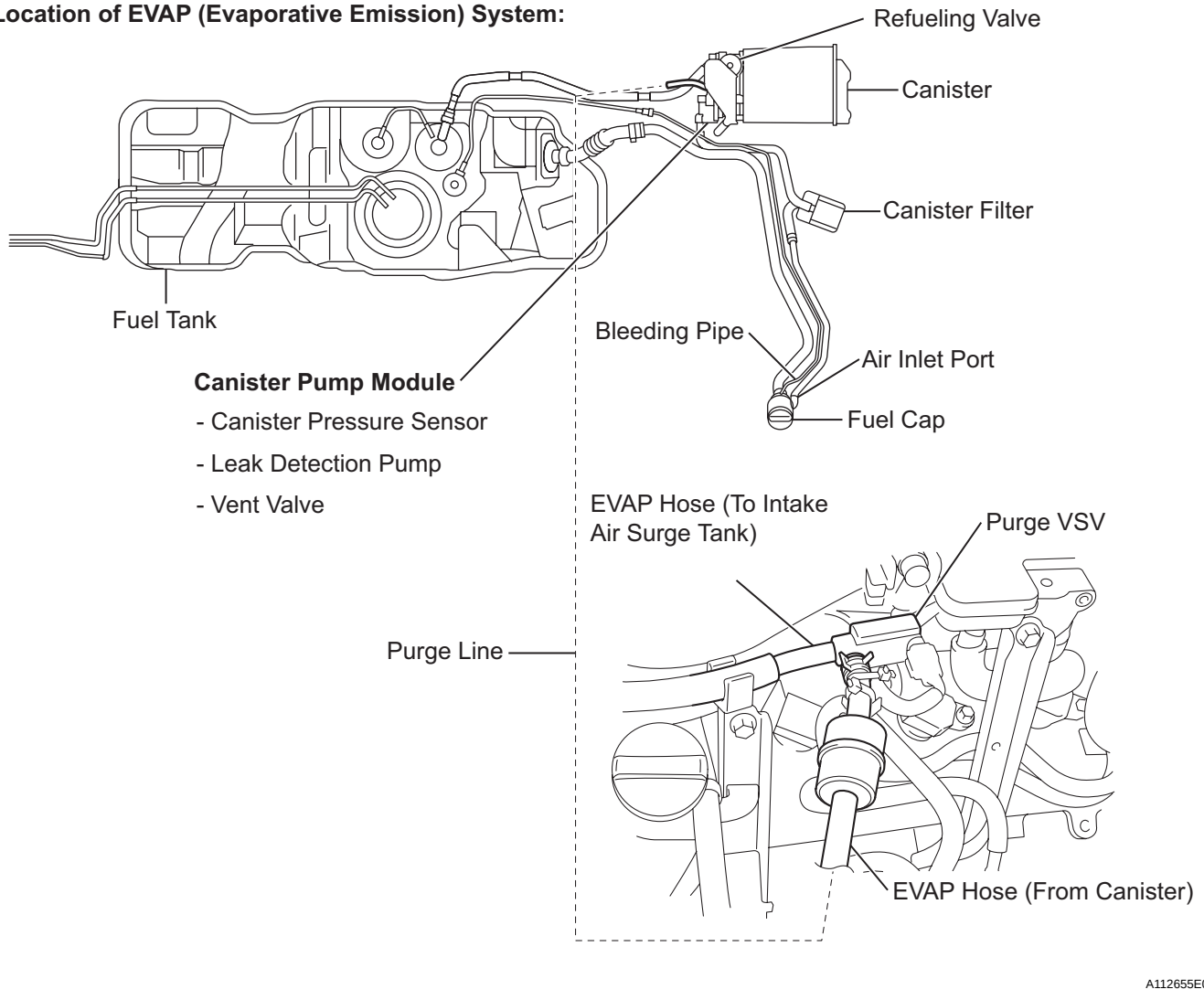

NOTICE:
The canister is located near the fuel tank, underneath the body.

ES

EVAP System Circuit:

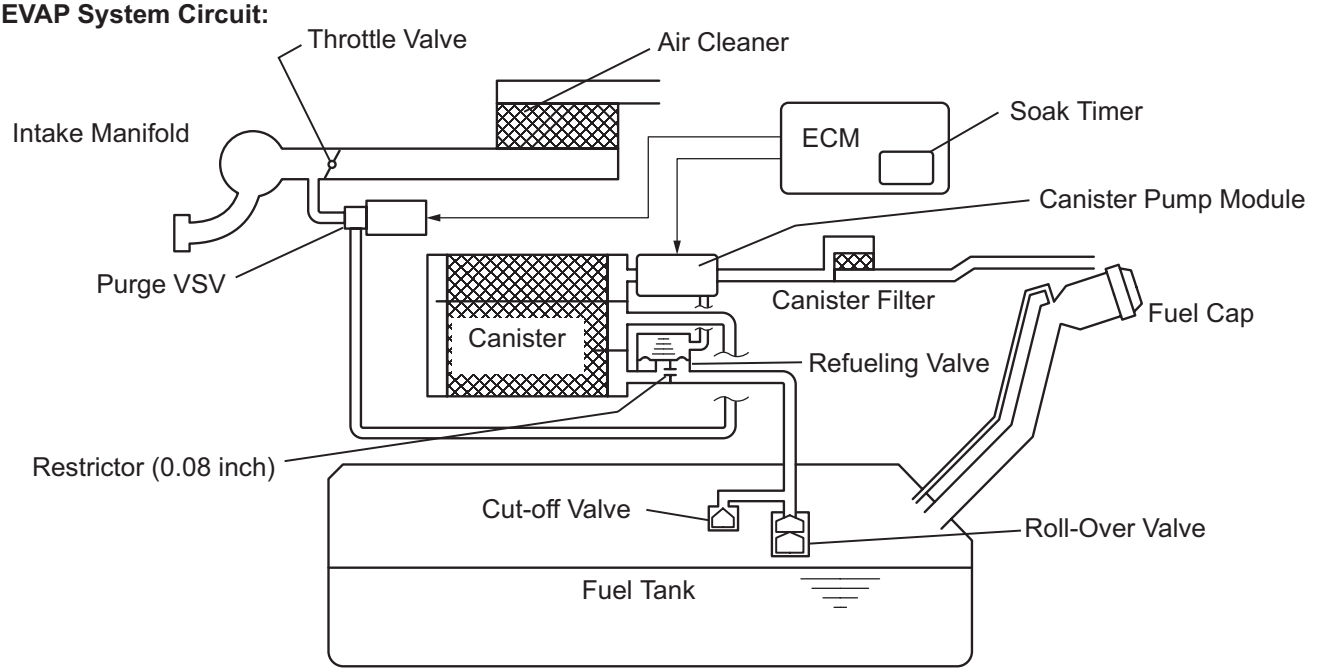

NOTICE:

In this vehicle's EVAP system, turning ON the vent valve does not seal off the EVAP system. To check for leaks in the EVAP system, disconnect the air inlet vent hose and apply pressure from the atmosphere side of the canister.

While the engine is running, if a predetermined condition (closed-loop etc.) is met, the purge VSV is opened by the ECM and stored fuel vapors in the canister are purged into the intake manifold. The ECM changes the duty cycle ratio of the purge VSV to control purge flow volume.

The purge flow volume is also determined by the intake manifold pressure. Atmospheric pressure is allowed into the canister through the vent valve to ensure that the purge flow is maintained when the negative pressure (vacuum) is applied to the canister.

The following two monitors run to confirm appropriate EVAP system operation.

1. Key-off monitor

This monitor checks for EVAP (Evaporative Emission) system leaks and canister pump module malfunctions. The monitor starts 5 hours* after the ignition switch is turned OFF. More than 5 hours are required for the fuel to cool down to stabilize the EVAP pressure, thus making the EVAP system monitor more accurate.

The leak detection pump creates negative pressure (vacuum) in the EVAP system and the pressure is measured. Finally, the ECM monitors for leaks from the EVAP system, and malfunctions in both the canister pump module and purge VSV, based on the EVAP pressure.

HINT:

*: If the engine coolant temperature is not below 35°C (95°F) 5 hours after the ignition switch is turned off, the monitor check starts 2 hours later. If it is still not below 35°C (95°F) 7 hours after the ignition switch is turned off, the monitor check starts 2.5 hours later.

2. Purge flow monitor

The purge flow monitor consists of the two monitors. The 1st monitor is conducted every time and the 2nd monitor is activated if necessary.

- The 1st monitor
  While the engine is running and the purge VSV (Vacuum Switching Valve) is ON (open), the ECM monitors the purge flow by measuring the EVAP pressure change. If negative pressure is not created, the ECM begins the 2nd monitor.

- The 2nd monitor
  The vent valve is turned OFF (open) and the EVAP pressure is measured. If the variation in the pressure is less than 0.5 kPa-g (3.75 mmHg-g), the ECM interprets this as the purge VSV being stuck closed, and illuminates the MIL and sets DTC P0441 (2 trip detection logic).

Atmospheric pressure check:
In order to ensure reliable malfunction detection, the variation between the atmospheric pressures, before and after conduction of the purge flow monitor, is measured by the ECM.

EVAP Purge Flow:

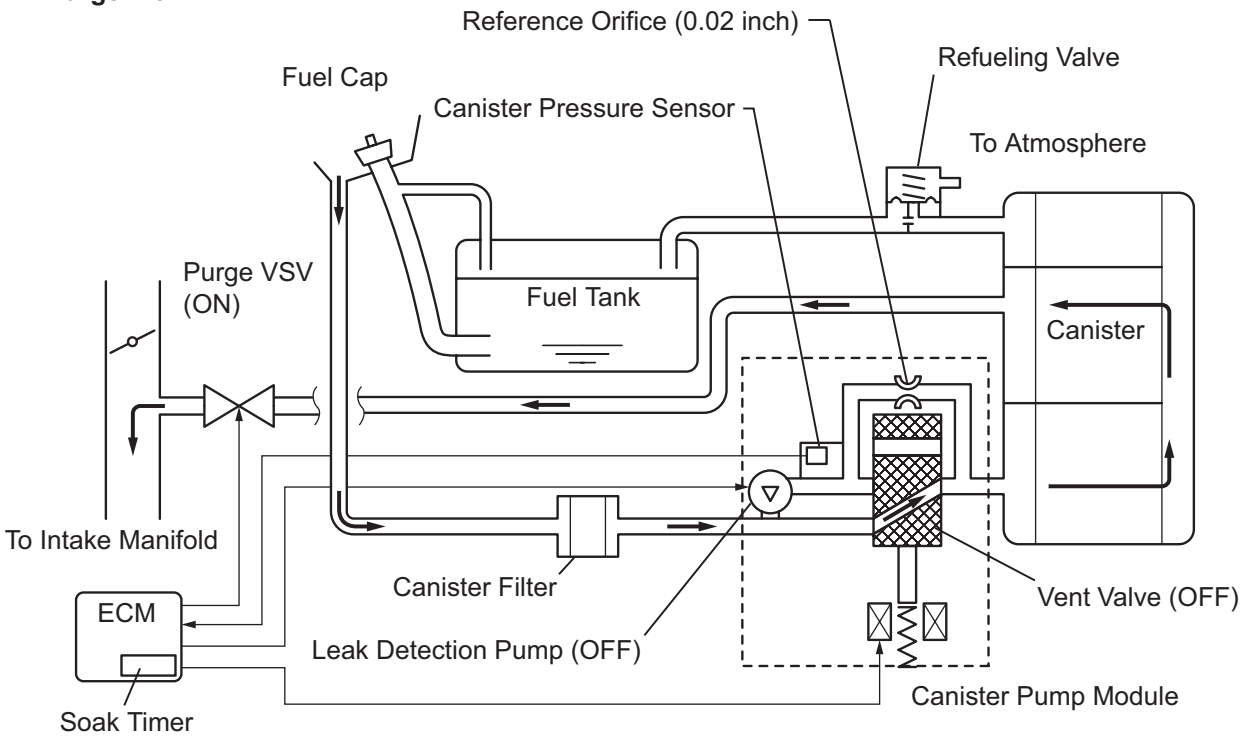

Components	Operations
Canister	Contains activated charcoal to absorb EVAP (Evaporative Emissions) generated in fuel tank.
Cut-off valve	Located in fuel tank. Valve floats and closes when fuel tank 100 % full.
Purge VSV (Vacuum Switching Valve)	Opens or closes line between canister and intake manifold. ECM uses purge VSV to control EVAP purge flow. In order to discharge EVAP absorbed by canister to intake manifold, ECM opens purge VSV. EVAP discharge volume to intake manifold controlled by purge VSV duty cycle ratio (current-carrying time). (Open: ON, Closed: OFF)
Refueling valve	Controls EVAP pressure from fuel tank to canister. Valve consists of diaphragm, spring and restrictor (diameter: 0.08 inch). When fuel vapor and pressure inside fuel tank increase, valve opens. While EVAP purged, valve closes and restrictor prevents large amount of vacuum from affecting pressure in fuel tank. Valve opened while refueling.
Roll-over valve	Located in fuel tank. Valve closes by its own weight when vehicle overturns to prevent fuel from spilling out.
Soak timer	Built into ECM. To ensure accurate EVAP monitor, measures 5 hours (+-15 minutes) after ignition switch turned OFF. This allows fuel to cool down, stabilizing EVAP pressure. When approximately 5 hours elapsed, ECM activates (refer to fig. 3).
Canister pump module	Consists of (a) to (d) below. Canister pump module cannot be disassembled.
(a) Vent valve	Vents and closes EVAP system. When ECM turns valve ON, EVAP system closed. When, ECM turns valve OFF, EVAP system vented. Negative pressure (vacuum) created in EVAP system to check for EVAP leaks by closing purge VSV, turning on vent valve (closed) and operating leak detection pump (refer to fig. 1).
(b) Canister pressure sensor	Indicates pressure as voltages. ECM supplies regulated 5 V to canister pressure sensor, and uses feedback from sensor to monitor EVAP system pressure (refer to fig. 2).

Components	Operations
(c) Leak detection pump	Creates negative pressure (vacuum) in EVAP system for leak check.
(d) Reference orifice	Has opening with 0.02 inch diameter. Vacuum produced through orifice by closing purge VSV, turning off vent valve and operating leak detection pump, to monitor reference pressure. Reference pressure indicates small leak of EVAP.

Canister Pump Module (fig. 1):

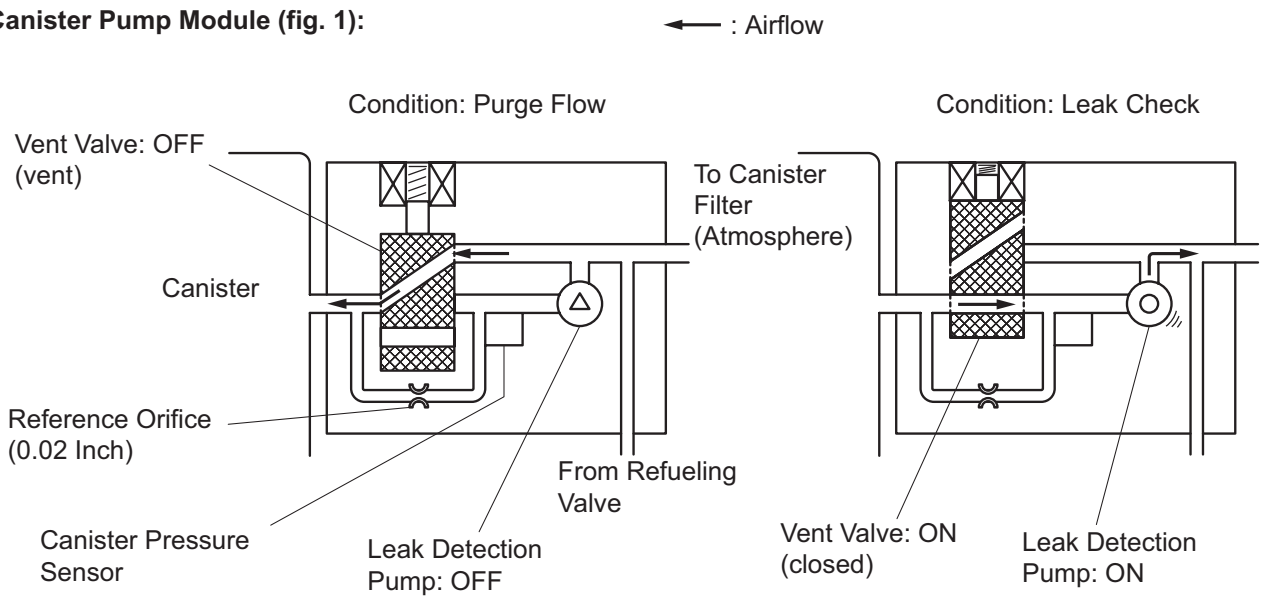

Y

A115902E02

Canister Pressure Sensor Specification (fig. 2):

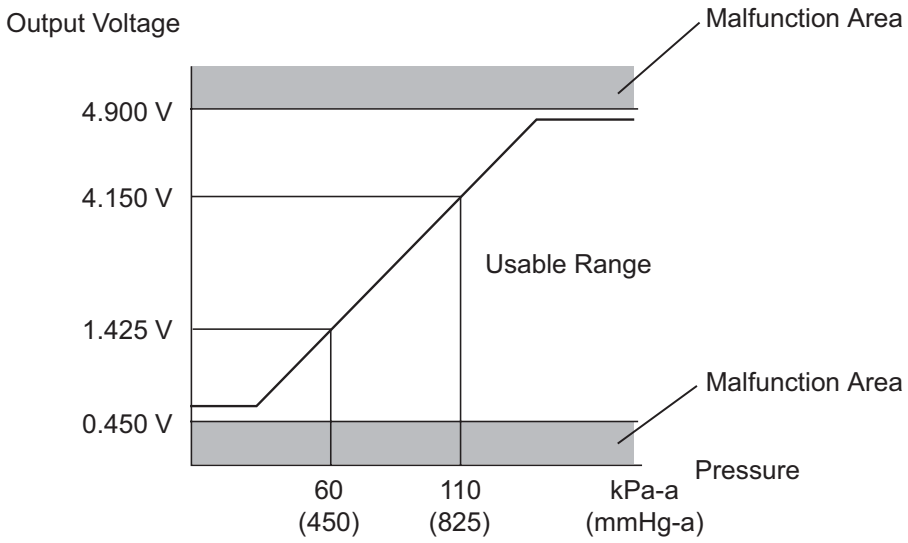

HINT:

Standard atmospheric pressure is 101.3 kPa-a (760 mmHg-a)

A115543E06

Soak Timer Circuit:

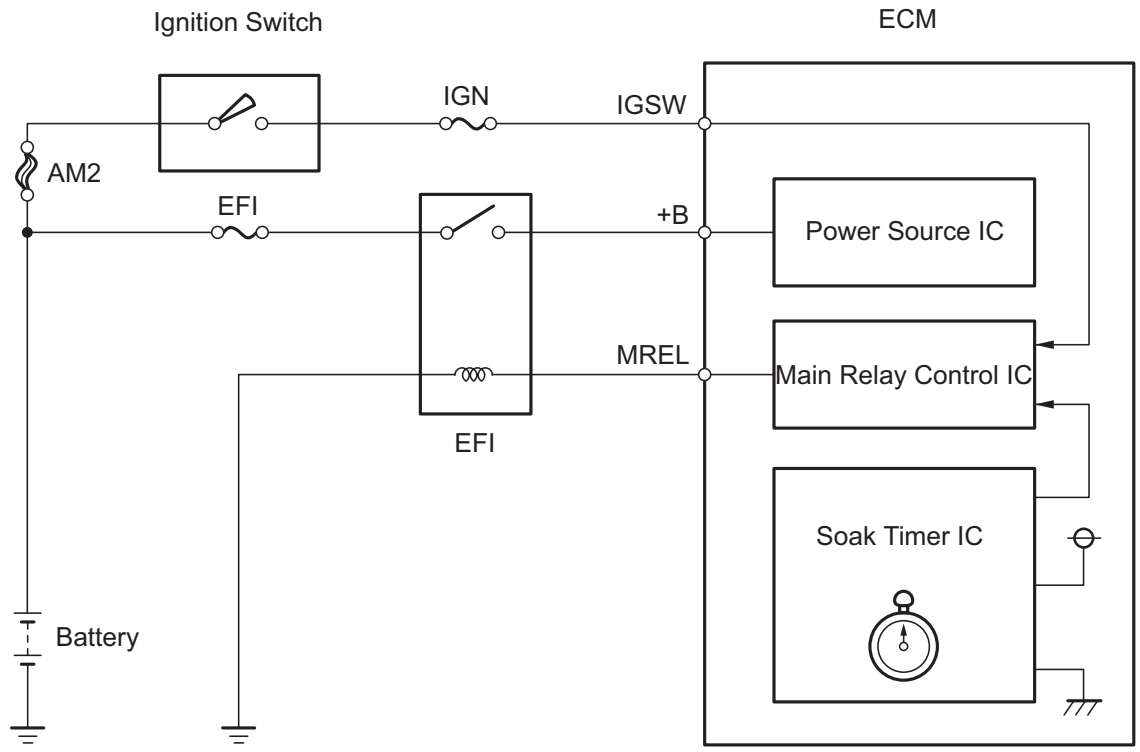

ES

WIRING DIAGRAM

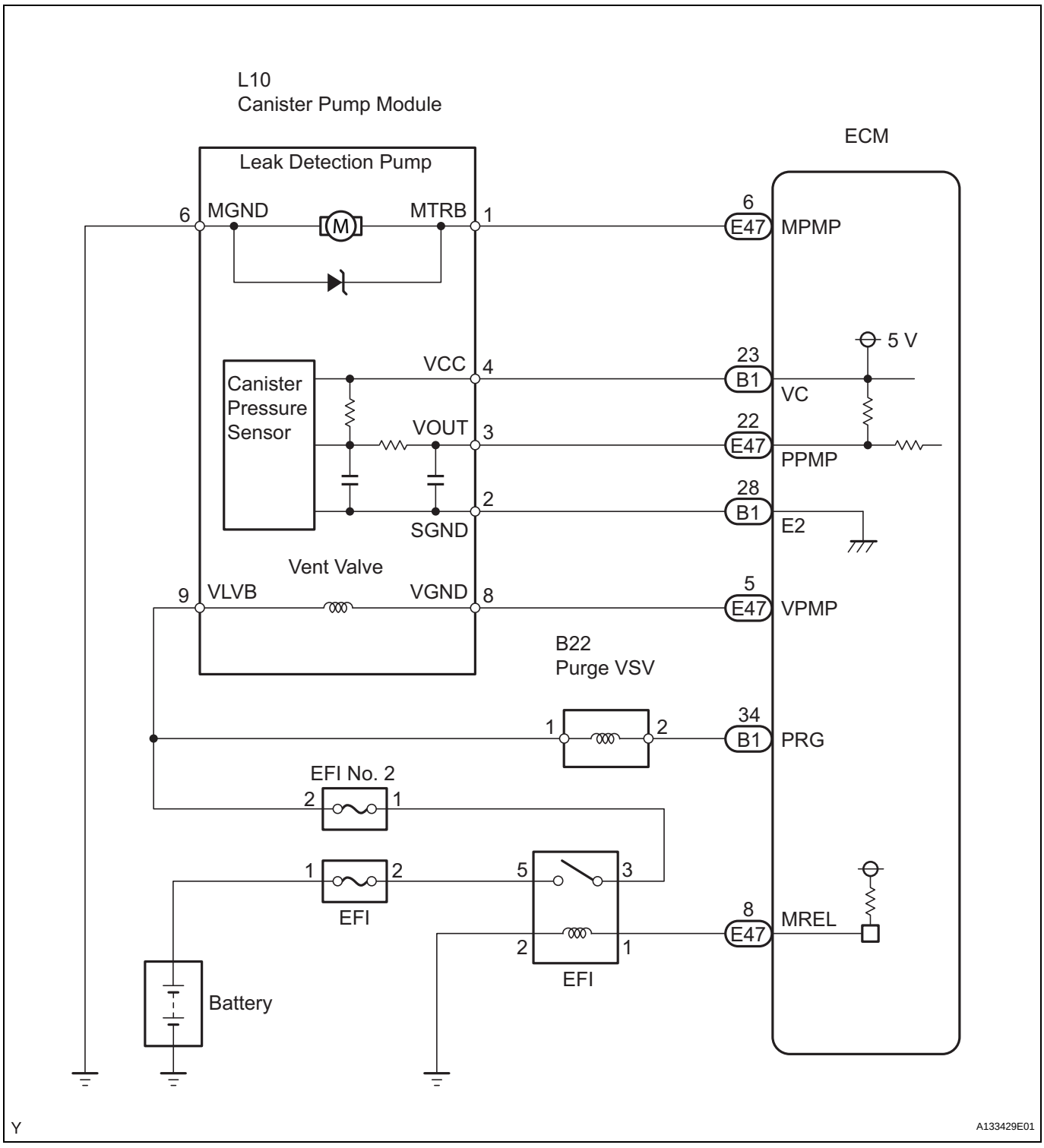

INSPECTION PROCEDURE

NOTICE:

An intelligent tester is required to conduct the following diagnostic troubleshooting procedure.

HINT:

- Using an intelligent tester monitor results enables the EVAP (Evaporative Emission) system to be confirmed.

- Read freeze frame data using an intelligent tester. Freeze frame data record the engine condition when malfunctions are detected. When troubleshooting, freeze frame data can help determine if the vehicle was moving or stationary, if the engine was warmed up or not, if the air-fuel ratio was lean or rich, and other data, from the time the malfunction occurred.

1	CONFIRM DTC

(a) Turn the ignition switch OFF and wait for 10 seconds.
(b) Turn the ignition switch ON.
(c) Turn the ignition switch OFF and wait for 10 seconds.
(d) Connect an intelligent tester to the DLC3.
(e) Turn the ignition switch ON and turn the tester ON.
(f) Select the following menu items: DIAGNOSIS / ENHANCED OBD II / DTC INFO / CURRENT CODES.
(g) Confirm DTCs and freeze frame data.
If any EVAP system DTCs are set, the malfunctioning area can be determined using the table below.

ES

DTCs / Malfunctioning Areas	P043E P043F	P0441	P0450	P0451	P0452	P0453	P0455	P0456	P2401 P2402	P2419	P2420
Reference orifice clogged	●								●	●	
Reference orifice high-flow	●								●	●	
Purge VSV stuck open		●					●				
Purge VSV stuck closed		●									
Canister pressure sensor fixed output				●							
Canister pressure sensor noise				●							
Canister pressure sensor low output			●		●						
Canister pressure sensor high output			●			●					
Gross leak		●					●				
Small leak								●			
Leak detection pump stuck OFF	●								●	●	
Leak detection pump stuck ON	●								●	●	
Vent valve stuck closed	●								●	●	
Vent valve stuck open (vent)											●

Y

A106731E11

NOTICE:
If the reference pressure difference between the first and second checks is greater than the specification, all the DTCs relating to the reference pressure (P043E, P043F, P2401, P2402 and P2419) are stored.

NEXT

2	PERFORM EVAP SYSTEM CHECK (AUTO OPERATION)

NOTICE:

- **The EVAP SYSTEM CHECK (AUTO OPERATION) consists of five steps performed automatically by the intelligent tester. It takes a maximum of approximately 18 minutes.**
- **Do not perform the EVAP SYSTEM CHECK when the fuel tank is more than 90 % full because the cut-off valve may be closed, making the fuel tank leak check unavailable.**
- **Do not run the engine during this operation.**
- **When the temperature of the fuel is 35°C (95°F) or more, a large amount of vapor forms and any check results become inaccurate. When performing the EVAP SYSTEM CHECK, keep the temperature below 35°C (95°F).**

(a) Clear DTCs (See page ES-38).

(b) Select the following menu items: DIAGNOSIS / ENHANCED OBD II / SYSTEM CHECK / EVAP SYS CHECK / AUTO OPERATION.

(c) After the EVAP SYSTEM CHECK is completed, check for pending DTCs by selecting the following menu items: DIAGNOSIS / ENHANCED OBD II / DTC INFO / PENDING CODES.
HINT:
If no pending DTCs are displayed, perform the MONITOR CONFIRMATION (see "Diagnostic Help" menu). After this confirmation, check for pending DTCs. If no DTCs are displayed, the EVAP system is normal.

NEXT

3	PERFORM EVAP SYSTEM CHECK (MANUAL OPERATION)

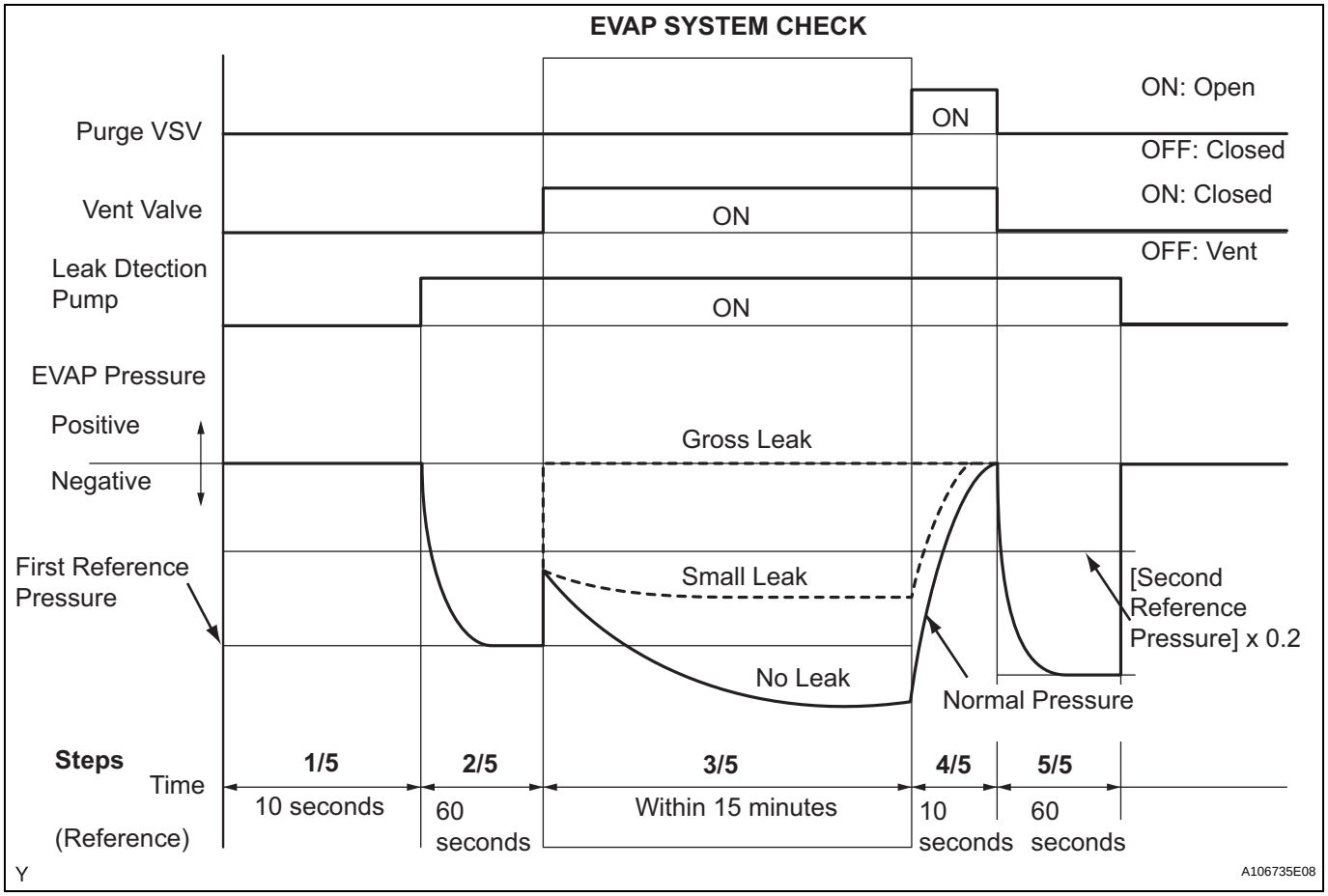

NOTICE:

- **In the EVAP SYSTEM CHECK (MANUAL OPERATION), perform the series of 5 EVAP SYSTEM CHECK steps manually using the intelligent tester.**
- **Do not perform the EVAP SYSTEM CHECK when the fuel tank is more than 90 % full because the cut-off valve may be closed, making the fuel tank leak check unavailable.**
- **Do not run the engine during this operation.**
- **When the temperature of the fuel is 35°C (95°F) or more, a large amount of vapor forms and any check results become inaccurate. When performing the EVAP SYSTEM CHECK, keep the temperature below 35°C (95°F).**

(a) Clear DTCs (See page ES-38).

(b) Select the following menu items: DIAGNOSIS / ENHANCED OBD II / SYSTEM CHECK / EVAP SYS CHECK / MANUAL OPERATION.

NEXT

4	PERFORM EVAP SYSTEM CHECK (STEP 1/5)

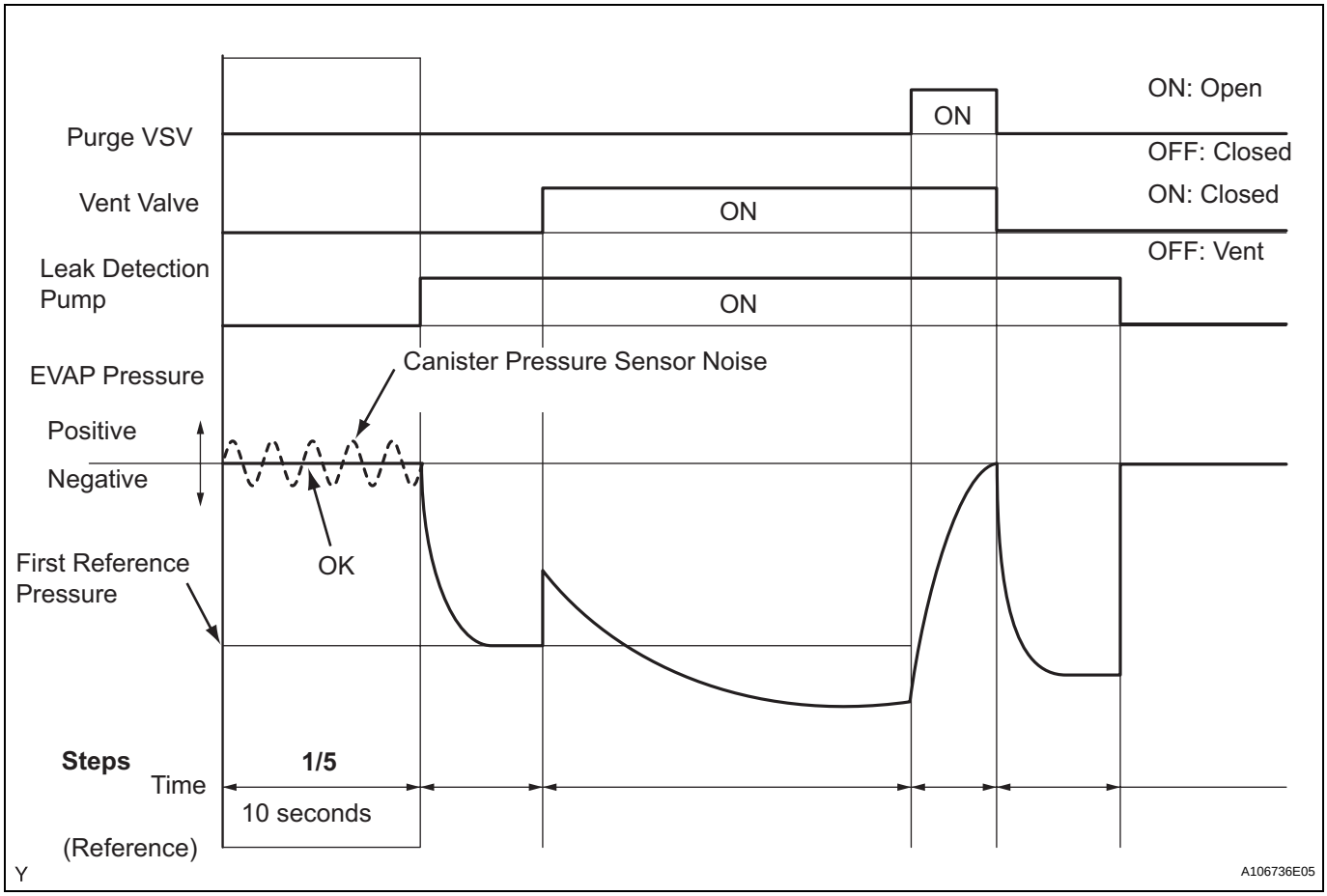

(a) Check the EVAP pressure in step 1/5.

Result

DTCs*	Test Results	Suspected Trouble Areas	Proceed To
-	Virtually no variation in EVAP pressure	Not yet determined	A
P0451	EVAP pressure fluctuates by +-0.3 kPa-g (2.25 mmHg-g) or more	Canister pressure sensor noise	B

*: These DTCs are already present in the ECM when the vehicle arrives and are confirmed in step 1.

B → Go to step 30

A

5	PERFORM EVAP SYSTEM CHECK (STEP 1/5 TO 2/5)

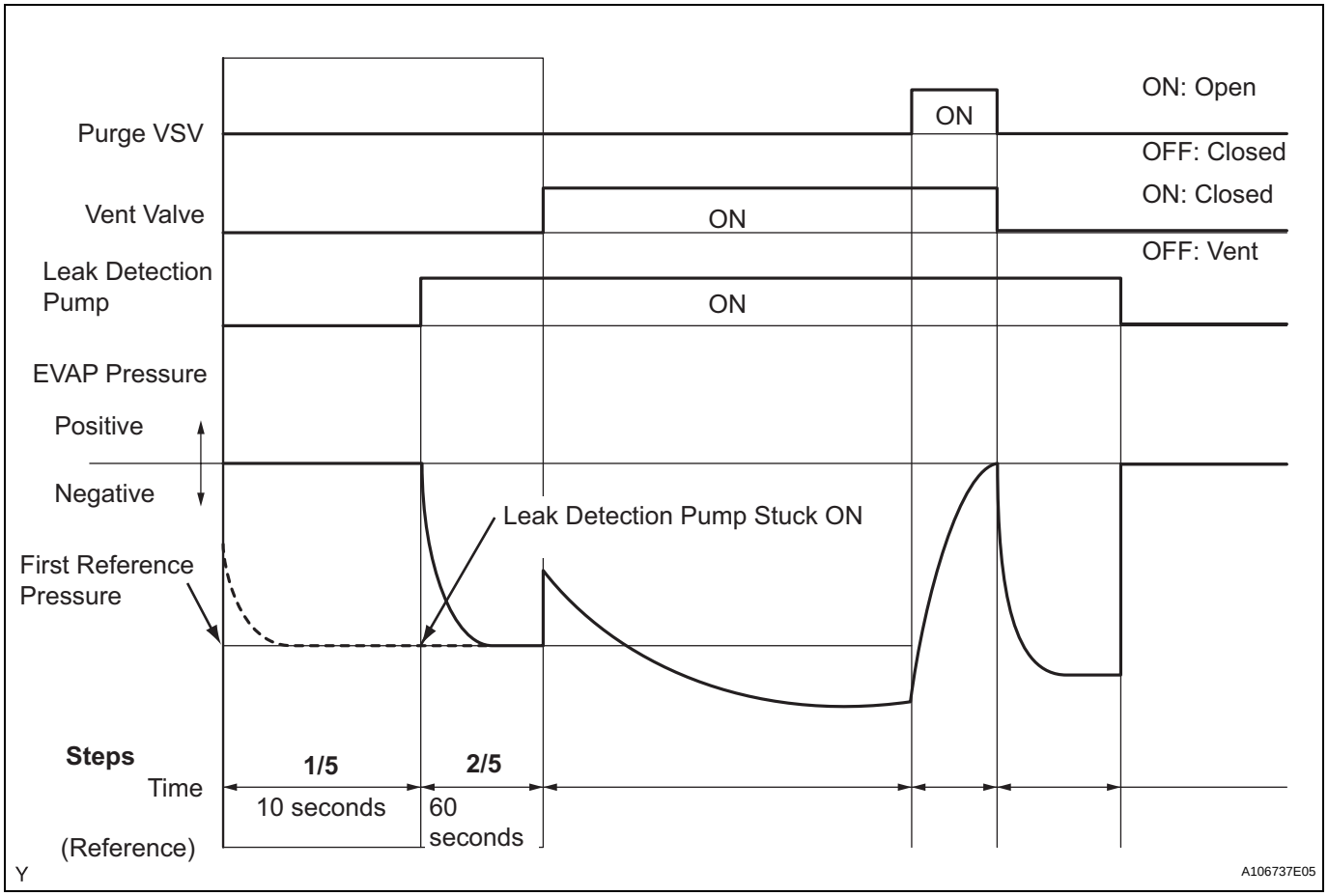

(a) Check the EVAP pressure in steps 1/5 and 2/5.

Result

DTCs*	Test Results	Suspected Trouble Areas	Proceed To
-	Virtually no variation in EVAP pressure during step 1/5. Then decreases to reference pressure	Not yet determined	A
P2402	Small difference between EVAP pressures during steps 1/5 and 2/5	Leak detection pump stuck ON	B

*: These DTCs are already present in the ECM when the vehicle arrives and are confirmed in step 1.
HINT:
The first reference pressure is the value determined in step 2/5.

B → Go to step 23

A

6	PERFORM EVAP SYSTEM CHECK (STEP 2/5)

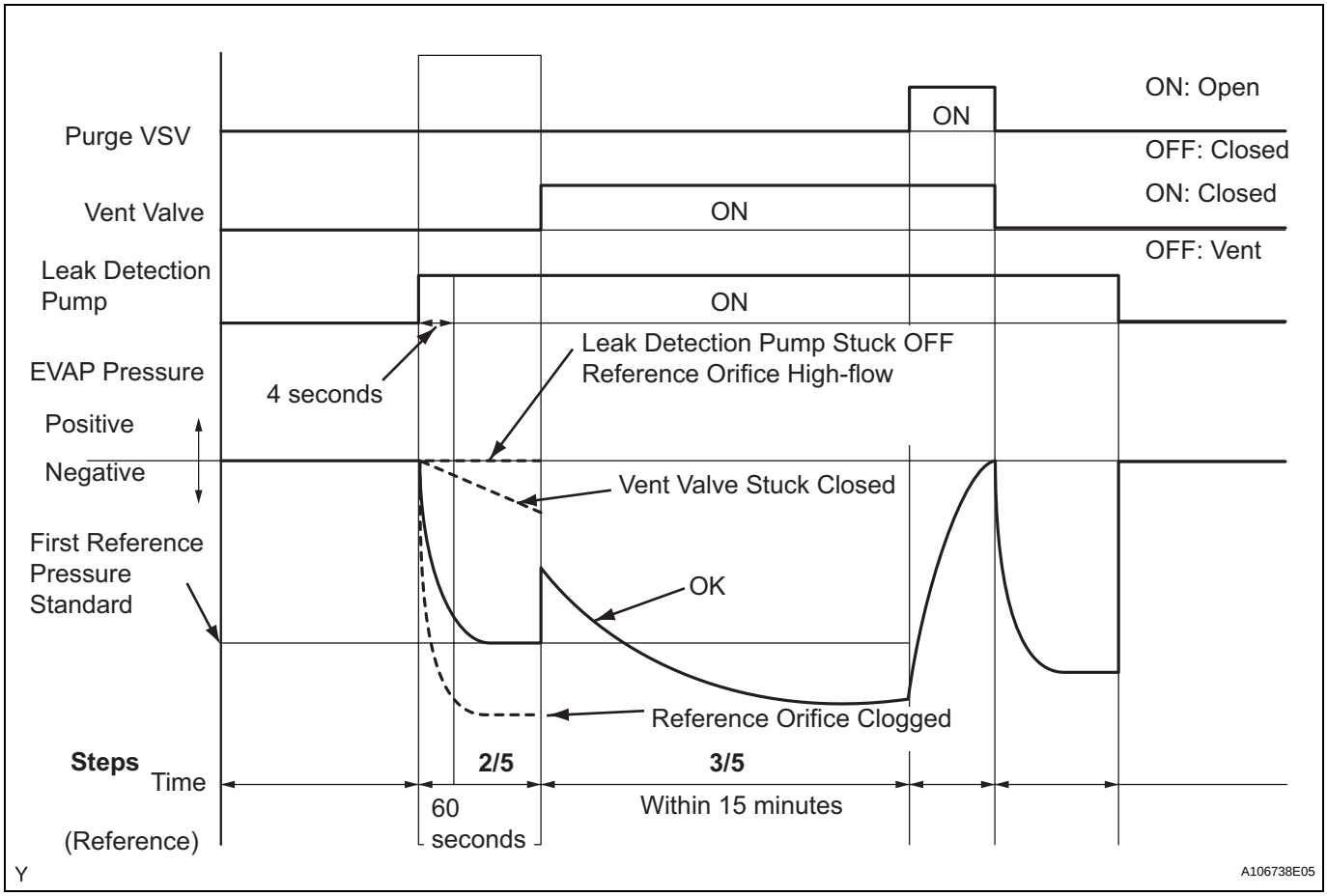

HINT:
Make a note of the pressures checked in steps (a) and (b) below.
(a) Check the EVAP pressure 4 seconds after the leak detection pump is activated*.
*: The leak detection pump begins to operate as step 1/5 finishes and step 2/5 starts.
(b) Check the EVAP pressure again when it has stabilized. This pressure is the reference pressure.

Result

DTCs*	Test Results	Suspected Trouble Areas	Proceed To
-	EVAP pressure in step (b) between -4.85 kPa-g and -1.057 kPa-g (-36.4 mmHg-g and -7.93 mmHg-g)	Not yet determined	A
P043F and P2401	EVAP pressure in step (b) -1.057 kPa-g (-7.93 mmHg-g) or more	• Reference orifice high-flow • Leak detection pump stuck OFF	B
P043E	EVAP pressure in step (b) below -4.85 kPa-g (-36.4 mmHg-g)	Reference orifice clogged	C
P2419	EVAP pressure in step (a) more than -1.057 kPa-g (-7.93 mmHg-g)	Vent valve stuck closed	D

*: These DTCs are already present in the ECM when the vehicle arrives and are confirmed in step 1.

B	Go to step 11
C	Go to step 30
D	Go to step 19

A

7	PERFORM EVAP SYSTEM CHECK (STEP 2/5 TO 3/5)

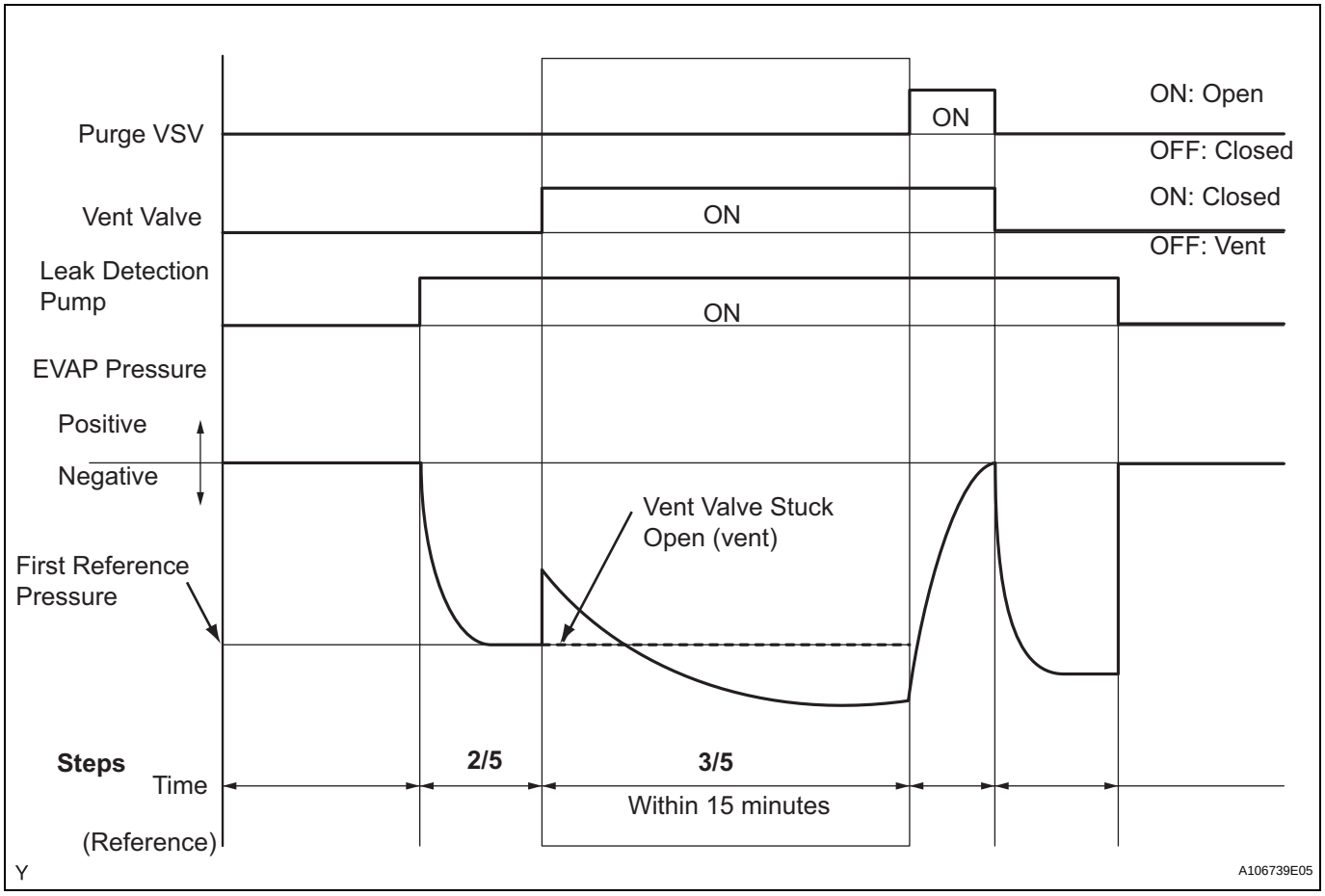

(a) Check the EVAP pressure increase in step 3/5.

Result

DTCs*	Test Results	Suspected Trouble Areas	Proceed To
-	EVAP pressure increases by 0.3 kPa-g (2.25 mmHg-g) or more within 10 seconds of proceeding from step 2/5 to step 3/5	Not yet determined	A
P2420	No variation in EVAP pressure despite proceeding from step 2/5 to step 3/5	Vent valve stuck open (vent)	B
P0451	No variation in EVAP pressure during steps 1/5 through 3/5	Canister pressure sensor malfunction fixed	C

*: These DTCs are already present in the ECM when the vehicle arrives and are confirmed in step 1.

B	Go to step 20

C → Go to step 30

A

8	PERFORM EVAP SYSTEM CHECK (STEP 3/5)

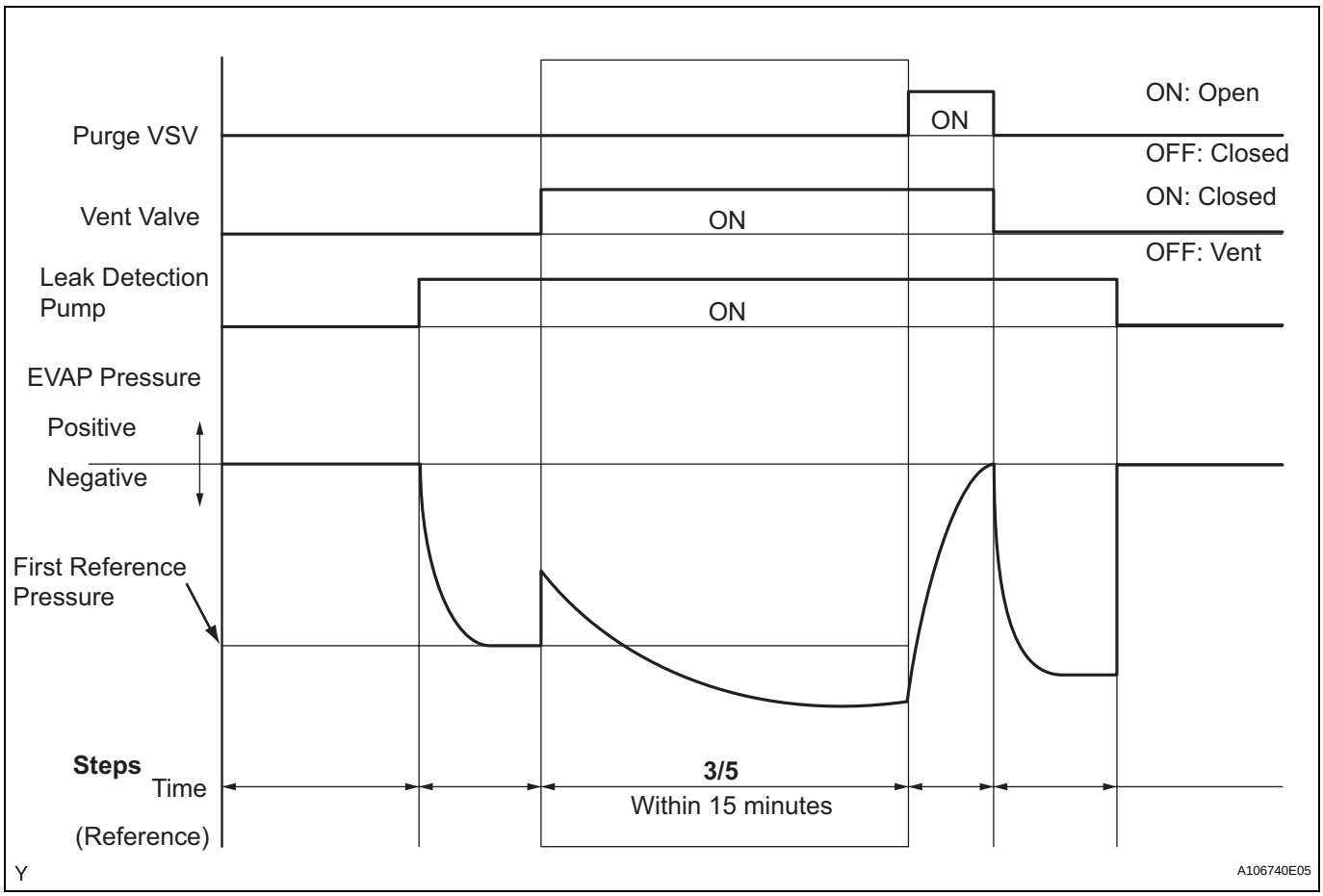

(a) Wait until the EVAP pressure change is less than 0.1 kPa-g (0.75 mmHg-g) for 30 seconds.
(b) Measure the EVAP pressure and record it.
HINT:
A few minutes are required for the EVAP pressure to become saturated. When there is little fuel in the fuel tank, it takes up to 15 minutes.

NEXT

9	PERFORM EVAP SYSTEM CHECK (STEP 4/5)

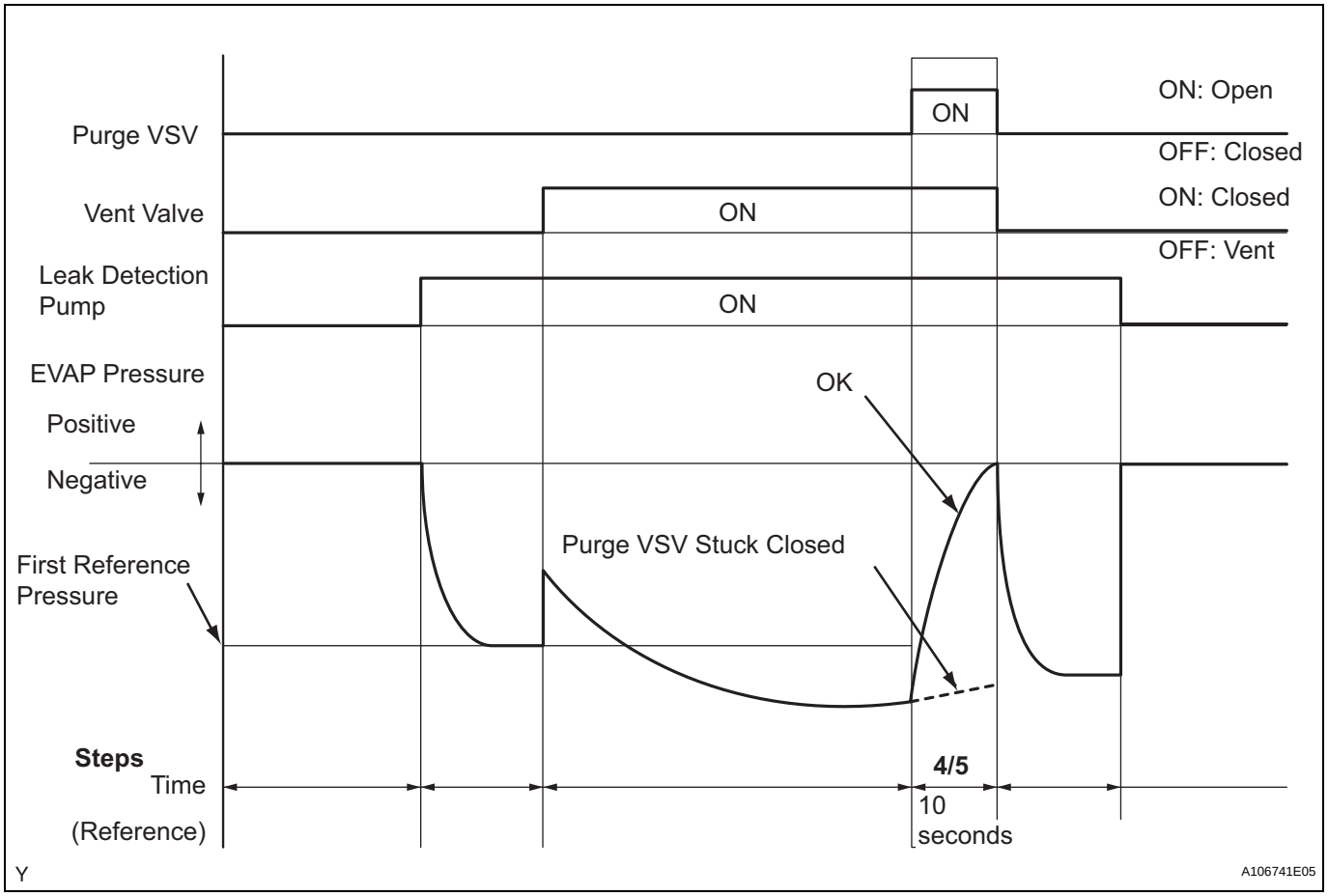

(a) Check the EVAP pressure in step 4/5.

Result

DTCs*	Test Results	Suspected Trouble Areas	Proceed To
-	EVAP pressure increases by 0.3 kPa-g (2.25 mmHg-g) or more within 10 seconds of proceeding from step 3/5 to step 4/5	Not yet determined	A
P0441	EVAP pressure increases by 0.3 kPa-g (2.25 mmHg-g) or more within 10 seconds of proceeding from step 3/5 to step 4/5	Problems in EVAP hose between purge VSV and intake manifold	B
P0441	Variation in EVAP pressure less than 0.3 kPa-g (2.25 mmHg-g) for 10 seconds, after proceeding from step 3/5 to step 4/5	Purge VSV stuck closed	C

*: These DTCs are already present in the ECM when the vehicle arrives and are confirmed in step 1.

B → Go to step 15

C → Go to step 12

A

10	PERFORM EVAP SYSTEM CHECK (STEP 5/5)

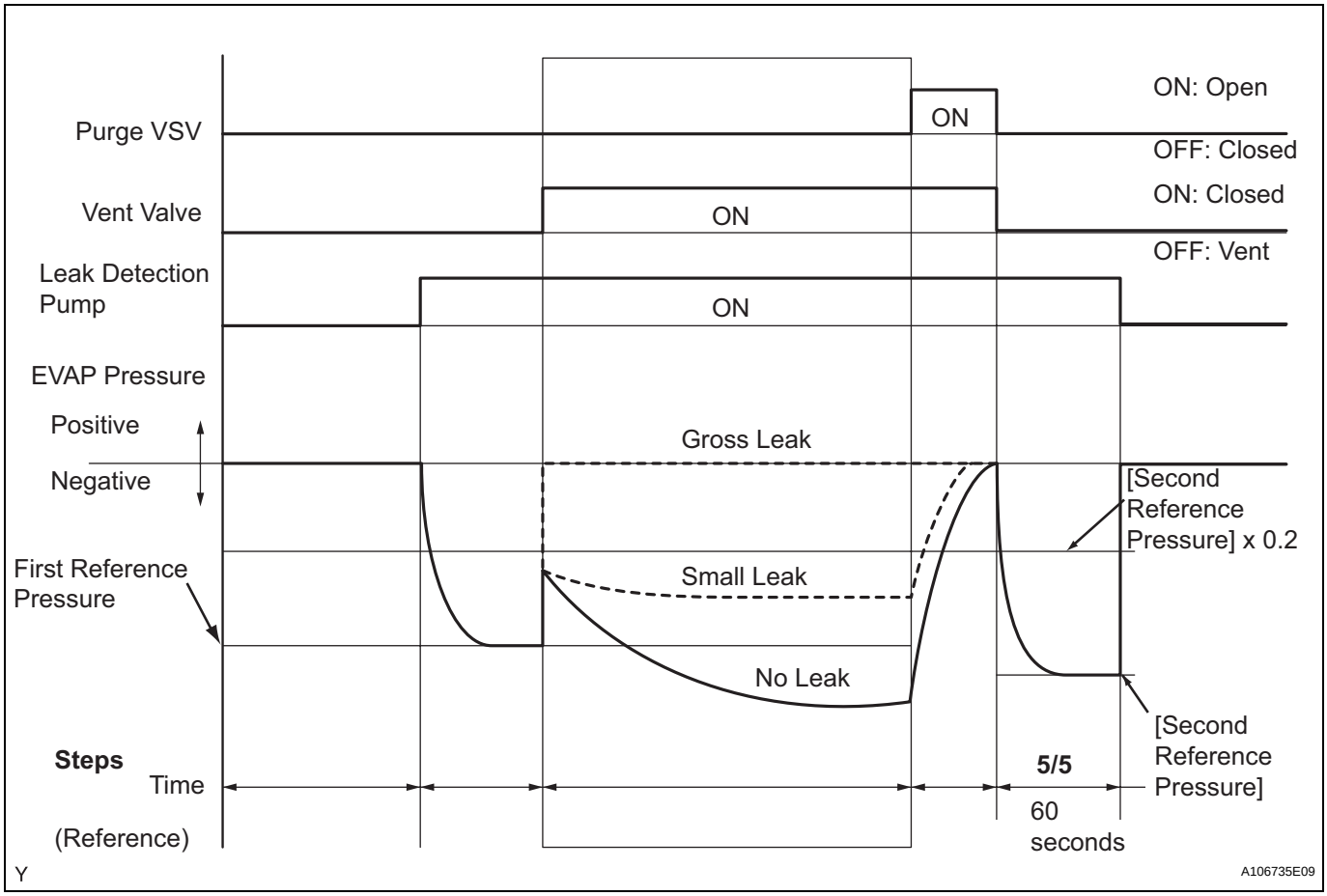

(a) Check the EVAP pressure in step 5/5.
(b) Compare the EVAP pressure in step 3/5 and the second reference pressure (step 5/5).

Result

DTCs*	Test Results	Suspected Trouble Areas	Proceed To
-	EVAP pressure (step 3/5) lower than second reference pressure (step 5/5)	Not yet determined (no leakage from EVAP system)	A
P0441 and P0455	EVAP pressure (step 3/5) higher than [second reference pressure (step 5/5) x 0.2]	• Purge VSV stuck open • EVAP gross leak	B
P0456	EVAP pressure (step 3/5) higher than second reference pressure (step 5/5)	EVAP small leak	B

*: These DTCs are already present in the ECM when the vehicle arrives and are confirmed in step 1.

A	Go to step 36
B	Go to step 12

11	PERFORM EVAP SYSTEM CHECK (STEP 3/5)

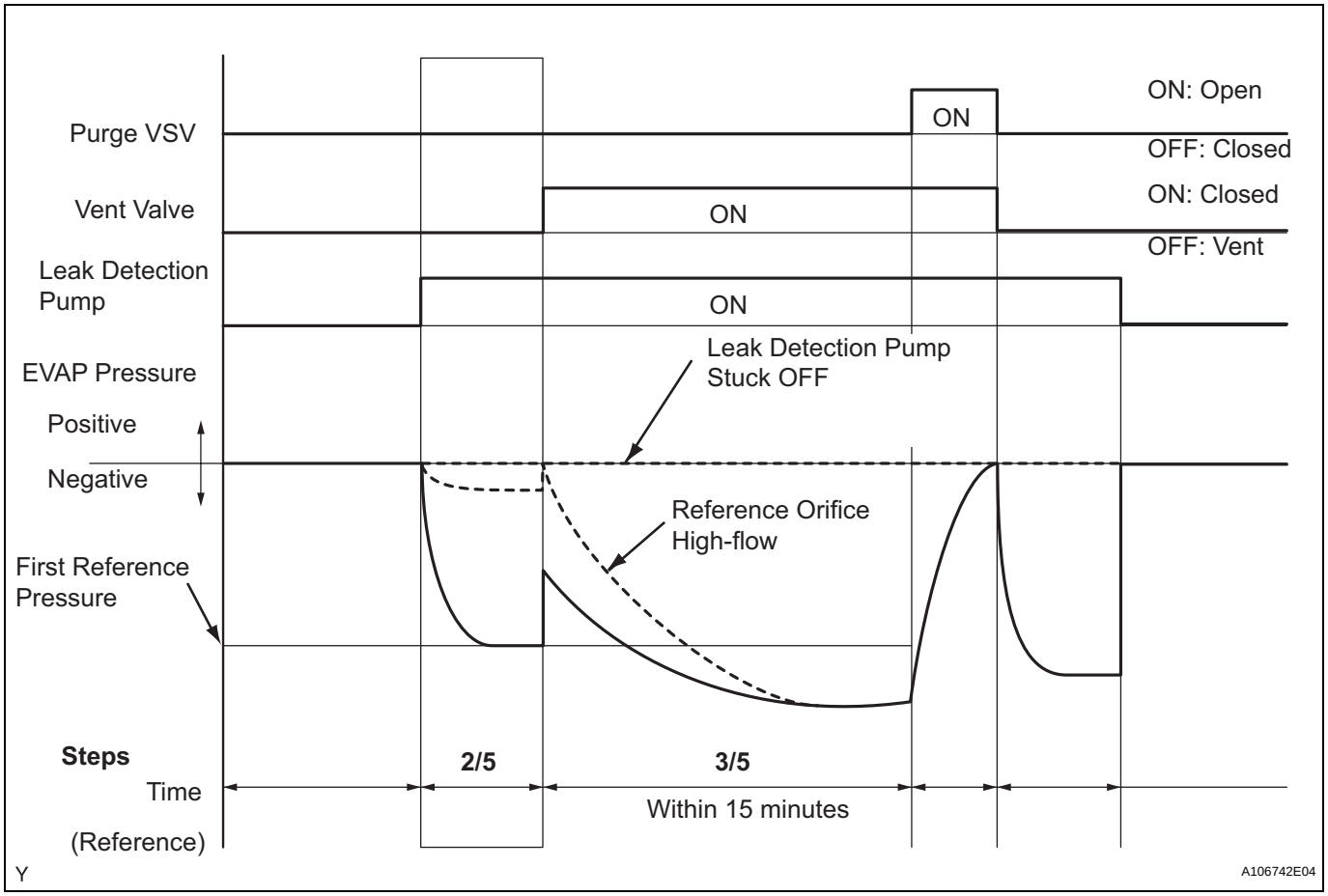

(a) Check the EVAP pressure in step 3/5.

Result

DTCs*	Test Results	Suspected Trouble Areas	Proceed To
P043F	EVAP pressure less than [reference pressure] measured at 2/5	Reference orifice high-flow	A
P2401	EVAP pressure almost same as [reference pressure] measured at 2/5	Leak detection pump stuck OFF	B

*: These DTCs are already present in the ECM when the vehicle arrives and are confirmed in step 1.
HINT:
The first reference pressure is the value determined in step 2/5.

A	Go to step 30
B	Go to step 23

12	PERFORM ACTIVE TEST USING INTELLIGENT TESTER (PURGE VSV)

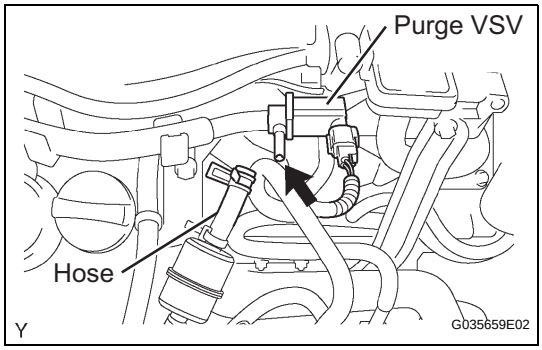

(a) Select the following menu items: DIAGNOSIS / ENHANCED OBD II/ ACTIVE TEST / EVAP VSV.
(b) Disconnect the hose (connected to the canister) from the purge VSV.
(c) Start the engine.
(d) Using the tester, turn off the purge VSV (EVAP VSV: OFF).
(e) Use your finger to confirm that the purge VSV has no suction.
(f) Using the tester, turn on the purge VSV (EVAP VSV: ON).
(g) Use your finger to confirm that the purge VSV has suction.

ES

Result

Test Results	Suspected Trouble Areas	Proceed To
No suction when purge VSV turned OFF, and suction applied when turned ON	Purge VSV normal	A
Suction applied when purge VSV turned OFF	Purge VSV stuck open	B
No suction when purge VSV turned ON	• Purge VSV stuck closed • Problems with EVAP hose between purge VSV and intake air surge tank	C

(h) Reconnect the hose.

B → **Go to step 14**

C → **Go to step 15**

A

13	CHECK FUEL CAP ASSEMBLY

(a) Check that the fuel cap is correctly installed and confirm the fuel cap meets OEM specifications.
(b) Confirm that the fuel cap is tightened until a few click sounds are heard.
HINT:
If an EVAP tester is available, check the fuel cap using the tester.
(1) Remove the fuel cap and install it onto a fuel cap adaptor.
(2) Connect an EVAP tester pump hose to the adaptor, and pressurize the cap to 3.2 to 3.7 kPa (24 to 28 mmHg) using an EVAP tester pump.
(3) Seal the adaptor and wait for 2 minutes.
(4) Check the pressure. If the pressure is 2 kPa (15 mmHg) or more, the fuel cap is normal.

Result

Test Results	Suspected Trouble Areas	Proceed To
Fuel cap correctly installed	-	A

Test Results	Suspected Trouble Areas	Proceed To
Fuel cap loose	• Fuel cap improperly installed • Defective fuel cap • Fuel cap does not meet OEM specifications	B
No fuel cap	-	C

(5) Reinstall the fuel cap.

A	Go to step 29
B	Go to step 27
C	Go to step 28

ES

14 INSPECT VACUUM SWITCHING VALVE ASSEMBLY NO. 1 (PURGE VSV)

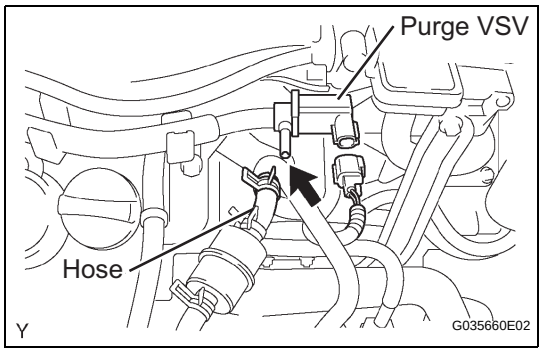

(a) Turn the ignition switch OFF.
(b) Disconnect the B22 purge VSV connector.
(c) Disconnect the hose (connected to the canister) from the purge VSV.
(d) Start the engine.
(e) Use your finger to confirm that the purge VSV has no suction.

Result

Test Results	Suspected Trouble Areas	Proceed To
No suction	ECM	A
Suction applied	Purge VSV	B

(f) Reconnect the purge VSV connector.
(g) Reconnect the hose.

A	Go to step 35
B	Go to step 31

15 CHECK EVAP HOSE (PURGE VSV - INTAKE AIR SURGE TANK)

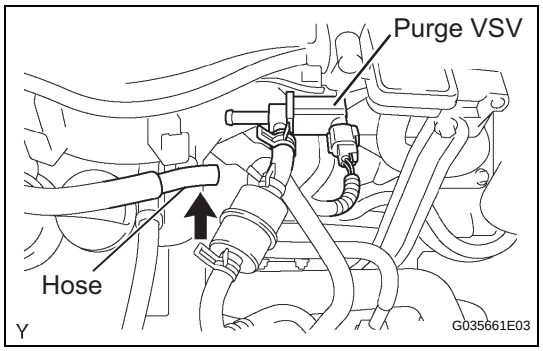

(a) Disconnect the hose (connected to the intake air surge tank) from the purge VSV.
(b) Start the engine.
(c) Use your finger to confirm that the hose has suction.

Result

Test Results	Suspected Trouble Areas	Proceed To
Suction applied	EVAP hose between purge VSV and intake air surge tank normal	A
No suction	• Intake air surge tank • EVAP hose between purge VSV and intake air surge tank	B

(d) Reconnect the hose.

B → Go to step 26

A

ES

16 INSPECT VACUUM SWITCHING VALVE ASSEMBLY NO. 1 (PURGE VSV)

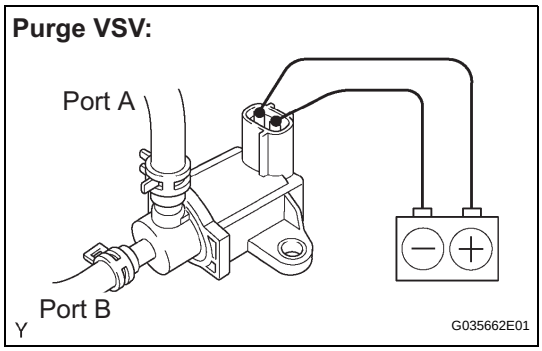

(a) Remove the purge VSV.
(b) Apply the battery voltage to the terminals of the purge VSV.
(c) Using an air gun, confirm that air flows from port A to port B.

Result

Test Results	Suspected Trouble Areas	Proceed To
Air flows	Purge VSV normal	A
No air flow	Purge VSV	B

(d) Reinstall the purge VSV.

B → Go to step 31

A

17 CHECK HARNESS AND CONNECTOR (POWER SOURCE OF PURGE VSV)

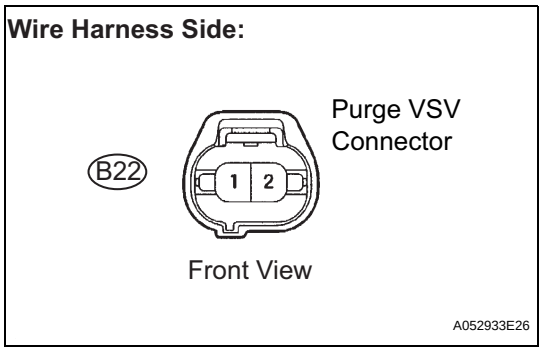

(a) Disconnect the B22 purge VSV connector.
(b) Turn the ignition switch ON.
(c) Measure the voltage between terminal 1 of the purge VSV connector and the body ground.

Result

Test Results	Suspected Trouble Areas	Proceed To
11 to 14 V	Normal	A
Other than result above	Wire harness or connectors between purge VSV and ECM	B

(d) Reconnect the purge VSV connector.

B → Go to step 32

A

18 CHECK HARNESS AND CONNECTOR (PURGE VSV - ECM)

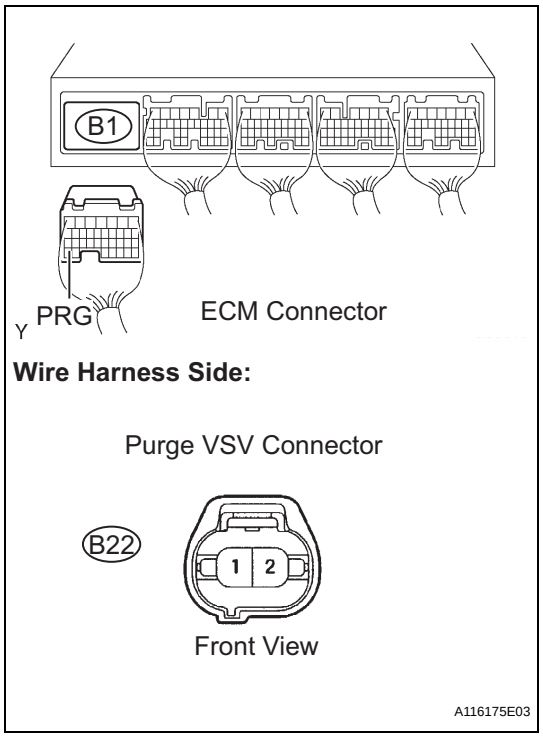

(a) Disconnect the B1 ECM connector and the B22 purge VSV connector.
(b) Check the resistance.

Standard Resistance

Tester Connections	Specified Conditions
PRG (B1-34) - Purge VSV (B22-2)	Below 1 Ω
PRG (B1-34) - Body ground	10 kΩ or higher
Purge VSV (B22-2) - Body ground	10 kΩ or higher

(c) Reconnect the purge VSV connector.
(d) Reconnect the ECM connector.

OK → Go to step 35

NG → Go to step 32

ES

19 PERFORM ACTIVE TEST USING INTELLIGENT TESTER (FOR VENT VALVE)

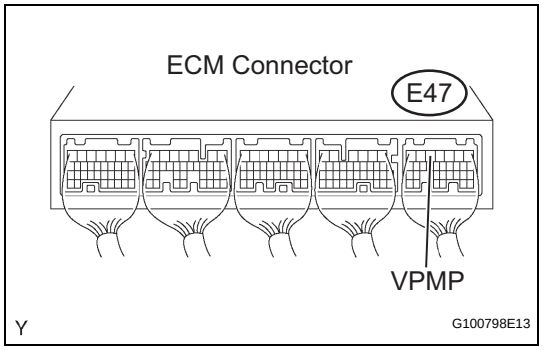

(a) Connect an intelligent tester to the DLC3.
(b) Turn the ignition switch ON and turn the tester ON.
(c) Select the following menu items: DIAGNOSIS / ENHANCED OBD II / ACTIVE TEST / VENT VALVE.
(d) Measure the voltage between terminal VPMP of the ECM connector and the body ground when the vent valve is turned ON (close) and OFF (vent) using the tester.

Result

Test Results	Suspected Trouble Areas	Proceed To
11 to 14 V when OFF Below 3 V when ON	Vent valve	A
Below 3 V when OFF and ON	ECM	B

A → Go to step 22

B → Go to step 35

20	PERFORM ACTIVE TEST USING INTELLIGENT TESTER (FOR VENT VALVE)

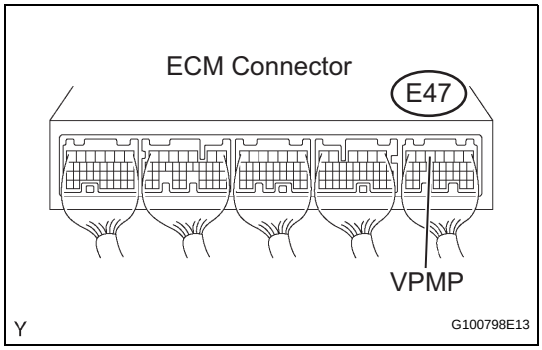

(a) Connect an intelligent tester to the DLC3.
(b) Turn the ignition switch ON and turn the tester ON.
(c) Select the following menu items: DIAGNOSIS / ENHANCED OBD II / ACTIVE TEST / VENT VALVE.
(d) Measure the voltage between terminal VPMP of the ECM connector and the body ground when the vent valve is turned ON (close) and OFF (vent) using the tester.

ES

Result

Test Results	Suspected Trouble Areas	Proceed To
Below 3 V when OFF and ON	Power source of vent valve	A
11 to 14 V when OFF Below 3 V when ON	Vent valve	B
11 to 14 V when OFF and ON	ECM	C

B → Go to step 22

C → Go to step 35

A

21	INSPECT CANISTER PUMP MODULE (POWER SOURCE FOR VENT VALVE)

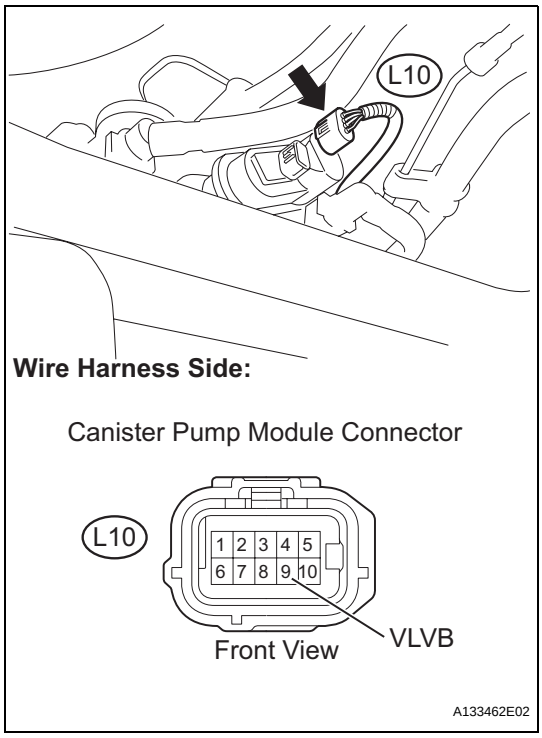

(a) Turn the ignition switch OFF.
(b) Disconnect the L10 canister connector.
(c) Turn the ignition switch ON.
(d) Measure the voltage between VLVB terminal of the canister pump module connector and the body ground.

Result

Test Results	Suspected Trouble Areas	Proceed To
11 to 14 V	Normal	A
Below 3 V	Power source wire harness of vent valve	B

(e) Reconnect the canister pump module connector.

B → **Go to step 32**

A

22 INSPECT CANISTER PUMP MODULE (VENT VALVE OPERATION)

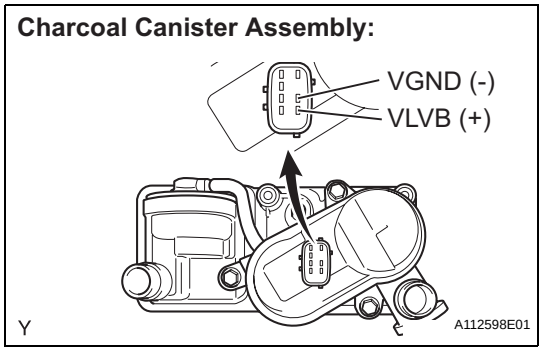

(a) Turn the ignition switch OFF.
(b) Disconnect the L10 canister pump module connector.
(c) Apply the battery voltage to VLVB and VGND terminals of the canister pump module.
(d) Touch the canister pump module to confirm the vent valve operation.

Result

Test Results	Suspected Trouble Areas	Proceed To
Operating	Wire harness between vent valve and ECM	A
Not operating	Vent valve	B

(e) Reconnect the canister pump module connector.

A → **Go to step 32**

B → **Go to step 30**

23 PERFORM ACTIVE TEST USING INTELLIGENT TESTER (FOR LEAK DETECTION PUMP)

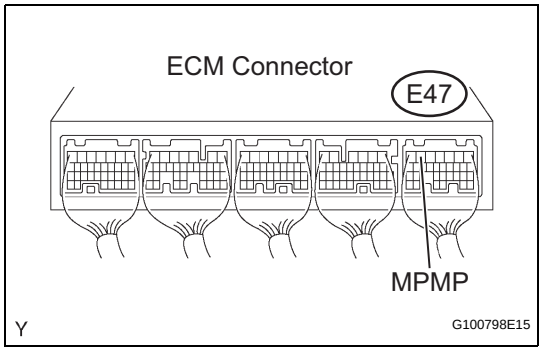

(a) Connect an intelligent tester to the DLC3.
(b) Turn the ignition switch ON and turn the tester ON.
(c) Select the following menu items: DIAGNOSIS / ENHANCED OBD II / ACTIVE TEST / VACUUM PUMP.
(d) Measure the voltage between terminal MPMP of the ECM connector and the body ground when the leak detection pump is turned ON and OFF using the tester.

Result

Test Results	Suspected Trouble Areas	Proceed To
Below 3 V when OFF 11 to 14 V when ON	ECM normal	A
11 to 14 V when OFF Below 3 V when ON	ECM	B

B → Go to step 35

A

24	CHECK HARNESS AND CONNECTOR (CANISTER PUMP MODULE - ECM)

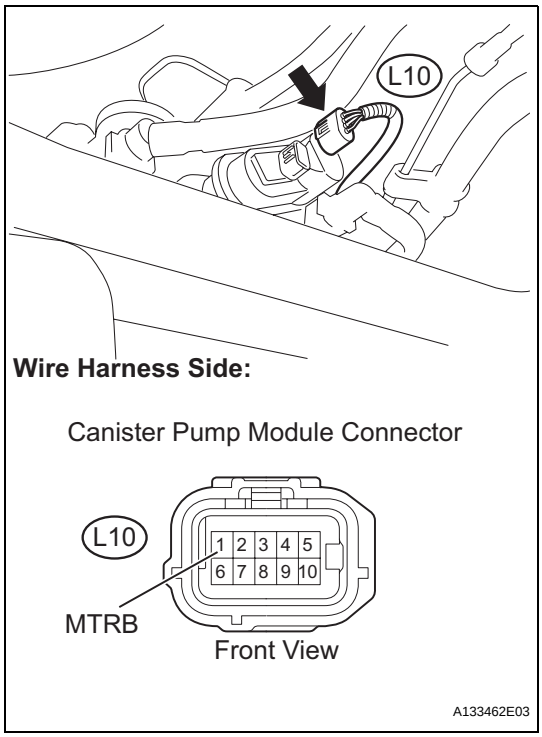

(a) Connect an intelligent tester to the DLC3.
(b) Turn the ignition switch OFF.
(c) Disconnect the L10 canister pump module connector.
(d) Turn the ignition switch ON and turn the tester ON.
(e) On the intelligent tester, select the following menu items: DIAGNOSIS / ENHANCED OBD II / ACTIVE TEST / VACUUM PUMP.
(f) Turn the leak detection pump ON.
(g) Measure the voltage between MTRB terminal of the canister pump module connector and the body ground.

Result

Test Results	Suspected Trouble Areas	Proceed To
11 to 14 V	Normal	A
Below 3 V	Wire harness between ECM and leak detection pump	B

(h) Reconnect the canister pump module connector.

B → Go to step 32

A

ES

25 CHECK HARNESS AND CONNECTOR (CANISTER PUMP MODULE - GROUND)

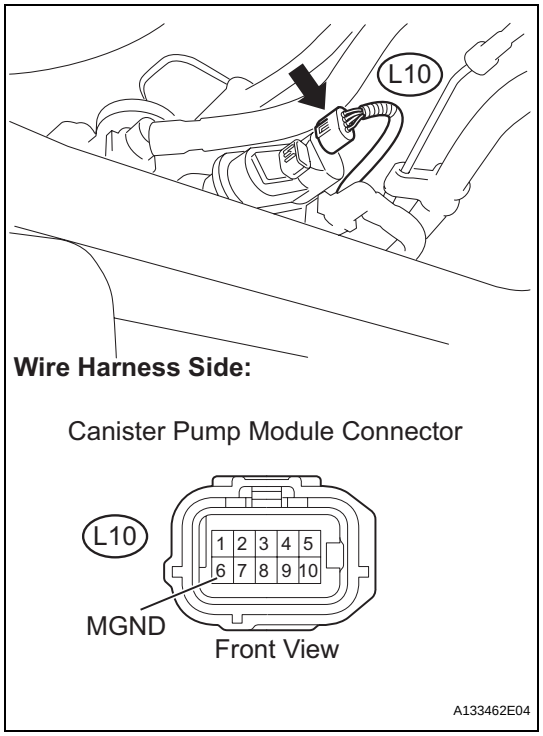

(a) Disconnect the L10 canister pump module connector.
(b) Turn the ignition switch OFF.
(c) Check the resistance between MGND terminal of the canister pump module connector and the body ground.

Result

Test Results	Suspected Trouble Areas	Proceed To
Below 1 Ω	Leak detection pump	A
10 kΩ or more	Wire harness between leak detection pump and body ground	B

(d) Reconnect the canister pump module connector.

A	Go to step 30
B	Go to step 32

26 INSPECT INTAKE AIR SURGE TANK (EVAP PURGE PORT)

(a) Stop the engine.
(b) Disconnect the EVAP hose from the intake air surge tank.
(c) Start the engine.
(d) Use your finger to confirm that the port of the intake air surge tank has suction.

Result

Test Results	Suspected Trouble Areas	Proceed To
Suction applied	EVAP hose between intake air surge tank and purge VSV	A
No suction	Intake air surge tank	B

(e) Reconnect the EVAP hose.

A	Go to step 33

B	Go to step 34

27	CORRECTLY REINSTALL OR REPLACE FUEL CAP ASSEMBLY

HINT:
- When reinstalling the fuel cap, tighten it until a few click sounds are heard.
- When replacing the fuel cap, use a fuel cap that meets OEM specifications, and install it until a few click sounds are heard.

NEXT	Go to step 37

28	REPLACE FUEL CAP ASSEMBLY

HINT:
When installing the fuel cap, tighten it until a few click sounds are heard.

NEXT	Go to step 37

29	LOCATE EVAP LEAK PART

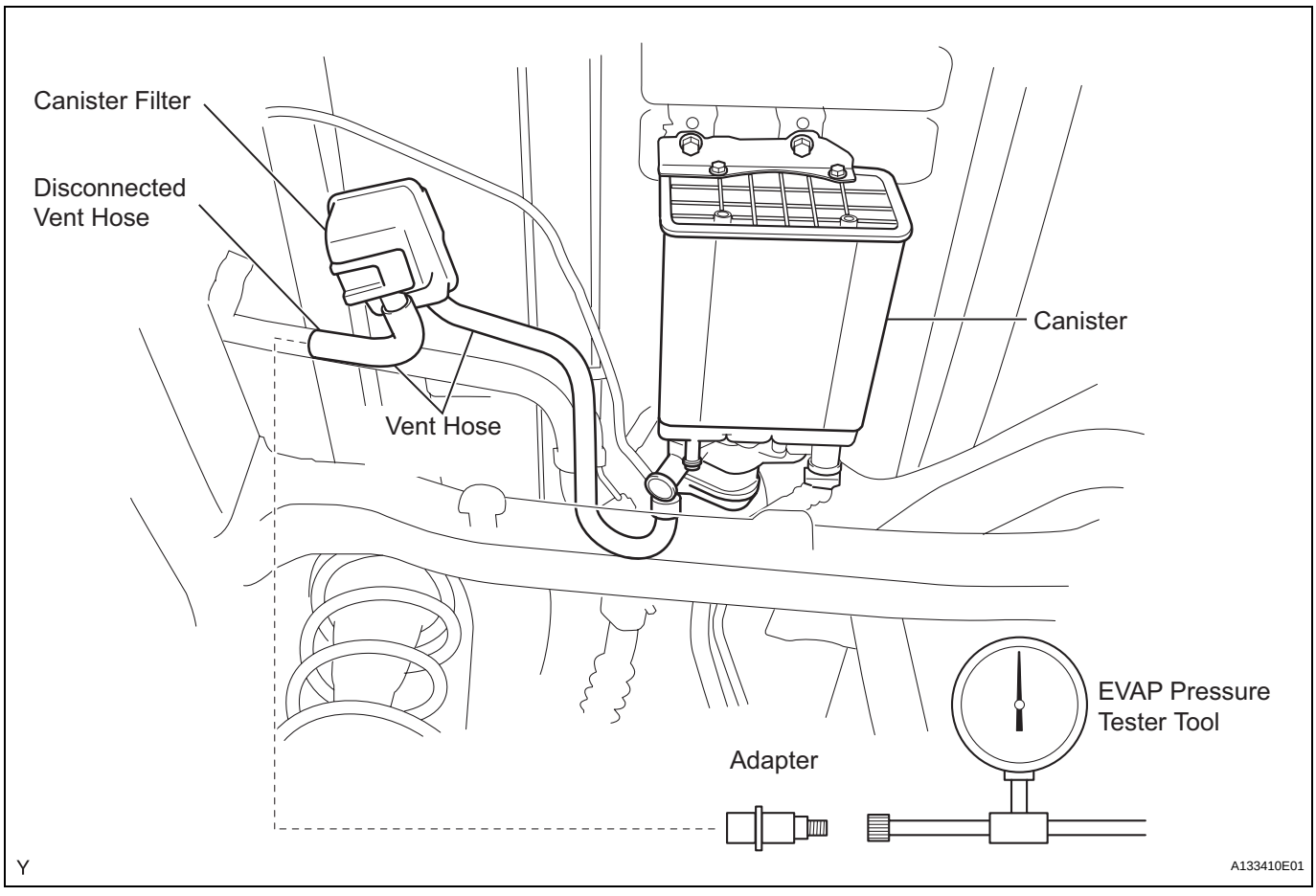

(a) Disconnect the vent hose.

(b) Connect the EVAP pressure tester tool to the canister with the adapter.
(c) Pressurize the EVAP system to 3.2 to 3.7 kPa (24 to 28 mmHg).
(d) Apply soapy water to the piping and connecting parts of the EVAP system.
(e) Look for areas where bubbles appear. This indicates the leak point.
(f) Repair or replace the leak point.

HINT:
Disconnect the hose between the canister and the fuel tank from the canister. Block the canister side and conduct an inspection. In this way, the fuel tank can be excluded as an area suspected of causing fuel leaks.

ES

NEXT	Go to step 37

30	REPLACE CANISTER ASSEMBLY

(a) Replace the canister assembly (See page EC-9).

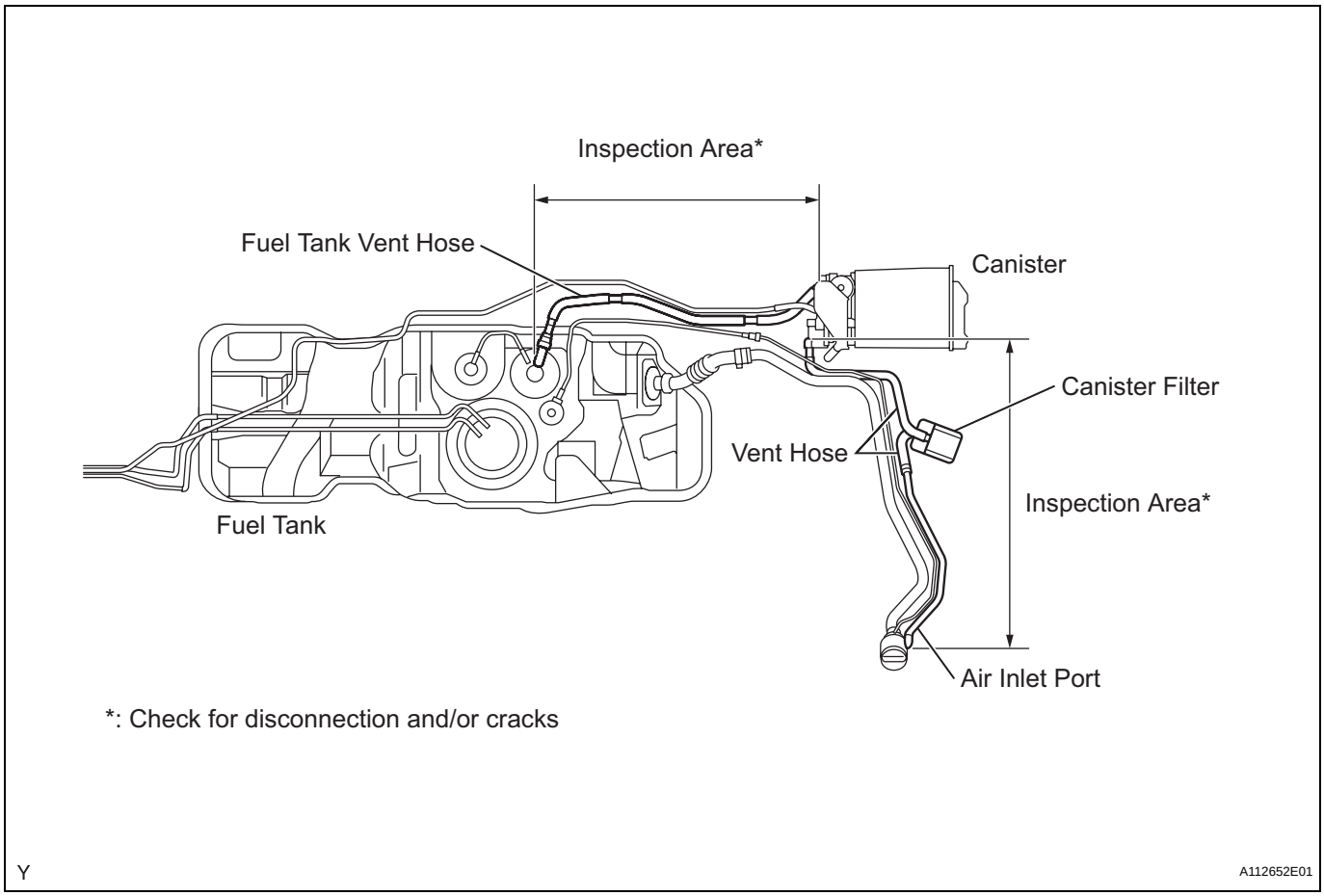

NOTICE:
When replacing the canister, check the canister pump module interior and related pipes for water, fuel and other liquids. If liquids are present, check for disconnections and/or cracks in the following: 1) the pipe from the air inlet port to the canister pump module: 2) the canister filter; and 3) the fuel tank vent hose.

NEXT → **Go to step 37**

31	REPLACE VACUUM SWITCHING VALVE ASSEMBLY NO. 1 (PURGE VSV)

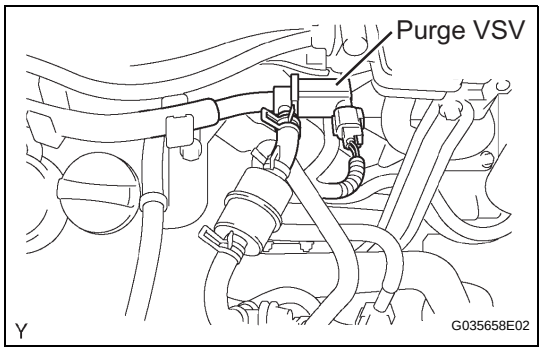

(a) Disconnect the connector and the hoses from the purge VSV.
(b) Remove the purge VSV.
(c) Install a new purge VSV.
(d) Reconnect the connector and hoses.

NEXT → **Go to step 37**

32	REPAIR OR REPLACE HARNESS OR CONNECTOR

NEXT → **Go to step 37**

33	REPLACE EVAP HOSE (INTAKE AIR SURGE TANK - PURGE VSV)

NEXT → **Go to step 37**

34	INSPECT INTAKE AIR SURGE TANK

(a) Check that the EVAP purge port of the intake air surge tank is not clogged. If necessary, replace the intake air surge tank.

NEXT → **Go to step 37**

35	REPLACE ECM

(a) Replace the ECM (See page ES-446).

NEXT → **Go to step 37**

36	REPAIR OR REPLACE PARTS AND COMPONENTS INDICATED BY OUTPUT DTCS

(a) Repair the malfunctioning areas indicated by the DTCs that had been confirmed when the vehicle was brought in.

NEXT → Go to step 37

37	PERFORM EVAP SYSTEM CHECK (AUTO OPERATION)

NOTICE:

- **The EVAP SYSTEM CHECK (AUTO OPERATION) consists of five steps performed automatically by the intelligent tester. It takes a maximum of approximately 18 minutes.**
- **Do not perform the EVAP SYSTEM CHECK when the fuel tank is more than 90 % full because the cut-off valve may be closed, making the fuel tank leak check unavailable.**
- **Do not run the engine during this operation.**
- **When the temperature of the fuel is 35°C (95°F) or more, a large amount of vapor forms and any check results become inaccurate. When performing an EVAP SYSTEM CHECK, keep the temperature below 35°C (95°F).**

(a) Clear DTCs (See page ES-38).

(b) Select the following menu items: DIAGNOSIS / ENHANCED OBD II / SYSTEM CHECK / EVAP SYS CHECK / AUTO OPERATION.

(c) After the SYSTEM CHECK is completed, check for pending DTCs by selecting the following menu items: DIAGNOSIS / ENHANCED OBD II / DTC INFO / PENDING CODES.
HINT:
If no pending DTCs are found, the repair has been successfully completed.

NEXT

COMPLETED

CONFIRMATION DRIVING PATTERN

HINT:
After a repair, check the Monitor Status by performing the Key-Off Monitor Confirmation and Purge Flow Monitor Confirmation described below.

1. Key-off monitor confirmation

(a) Preconditions
The monitor will not run unless:
- The vehicle has been driven for 10 minutes or more (in a city area or on a free way)
- The fuel tank is less than 90 % full
- The altitude is less than 8,000 ft (2,400 m)
- The Engine Coolant Temperature (ECT) is between 4.4°C and 35°C (40°F and 95°F)

- The Intake Air Temperature (IAT) is between 4.4°C and 35°C (40°F and 95°F)
- The vehicle remains stationary (the vehicle speed is 0 mph [0 km/h])

(b) Monitor Conditions
1. Allow the engine to idle for at least 5 minutes.
2. Turn the ignition switch OFF and wait for 6 hours (8 or 10.5 hours).
   HINT:
   Do not start the engine until checking MONITOR STATUS. If the engine is started, the steps described above must be repeated.

(c) Monitor Status
1. Connect an intelligent tester to the DLC3.
2. Turn the ignition switch ON and turn the tester ON.
3. Select the following menu items: DIAGNOSIS / ENHANCED OBD II / MONITOR STATUS.
4. Check the Monitor Status displayed on the tester.
   HINT:
   If INCMP is displayed, the monitor is not completed. Make sure that the preconditions have been met, and perform the Monitor Conditions again.

ES

2. Purge flow monitor confirmation (P0441)

HINT:
Perform this monitor confirmation after the Key-Off Monitor Confirmation shows COMPL (complete).

(a) Preconditions
The monitor will not run unless:
- The vehicle has been driven for 10 minutes or more (in a city area or on a free way)
- The ECT is between 4.4°C and 35°C (40°F and 95°F)
- The IAT is between 4.4°C and 35°C (40°F and 95°F)

(b) Monitor Conditions
1. Release the pressure from the fuel tank by removing and reinstalling the fuel cap.
2. Warm the engine up until the ECT reaches more than 75°C (167°F).
3. Increase the engine speed to 3,000 rpm once.
4. Allow the engine to idle and turn A/C ON for 1 minute.

(c) Monitor Status
1. Turn the ignition switch OFF (where ON or the engine is running).
2. Connect an intelligent tester to the DLC3.
3. Turn the ignition switch ON and turn the tester ON.
4. Select the following menu items: DIAGNOSIS / ENHANCED OBD II / MONITOR STATUS.
5. Check the Monitor Status displayed on the tester.
   HINT:
   If INCMP is displayed, the monitor is not completed. Make sure that the preconditions have been met, and perform the Monitor Conditions again.

MONITOR RESULT

Refer to CHECKING MONITOR STATUS (See page ES-20).
The test value and test limit information are described in the following table. This information is included under MONITOR RESULT in the emissions-related DTC sections:
- MID (Monitor Identification Data) is assigned to each emissions-related component.
- TID (Test Identification Data) is assigned to each test value.
- Scaling is used to calculate the test value indicated on generic OBD II scan tools.

EVAP - Key-off Type

MID	TID	Scaling	Unit	Description
$3D	$C9	Multiply by 0.001	kPa	Test value for small leak (P0456) Refer to pressure D*
$3D	$CA	Multiply by 0.001	kPa	Test value for gross leak (P0455) Refer to pressure E*
$3D	$CB	Multiply by 0.001	kPa	Test value for leak detection pump stuck OFF (P2401) Refer to pressure A*

MID	TID	Scaling	Unit	Description
$3D	$CD	Multiply by 0.001	kPa	Test value for leak detection pump stuck ON (P2402) Refer to pressure A*
$3D	$CE	Multiply by 0.001	kPa	Test value for vent valve stuck OFF (vent) (P2420) Refer to pressure C*
$3D	$CF	Multiply by 0.001	kPa	Test value for vent valve stuck ON (P2419) Refer to pressure A*
$3D	$D0	Multiply by 0.001	kPa	Test value for reference orifice low flow (P043E) Refer to pressure B*
$3D	$D1	Multiply by 0.001	kPa	Test value for reference orifice high flow (P043F) Refer to pressure A*
$3D	$D4	Multiply by 0.001	kPa	Test value for purge VSV stuck closed (P0441) Refer to pressure F*
$3D	$D5	Multiply by 0.001	kPa	Test value for purge VSV stuck open (P0441) Refer to pressure E*
$3D	$D7	Multiply by 0.001	kPa	Test value for purge flow insufficient (P0441) Refer to pressure G*

* Pressures A to G are indicated in the diagram below.

ES

Key-off Monitor:

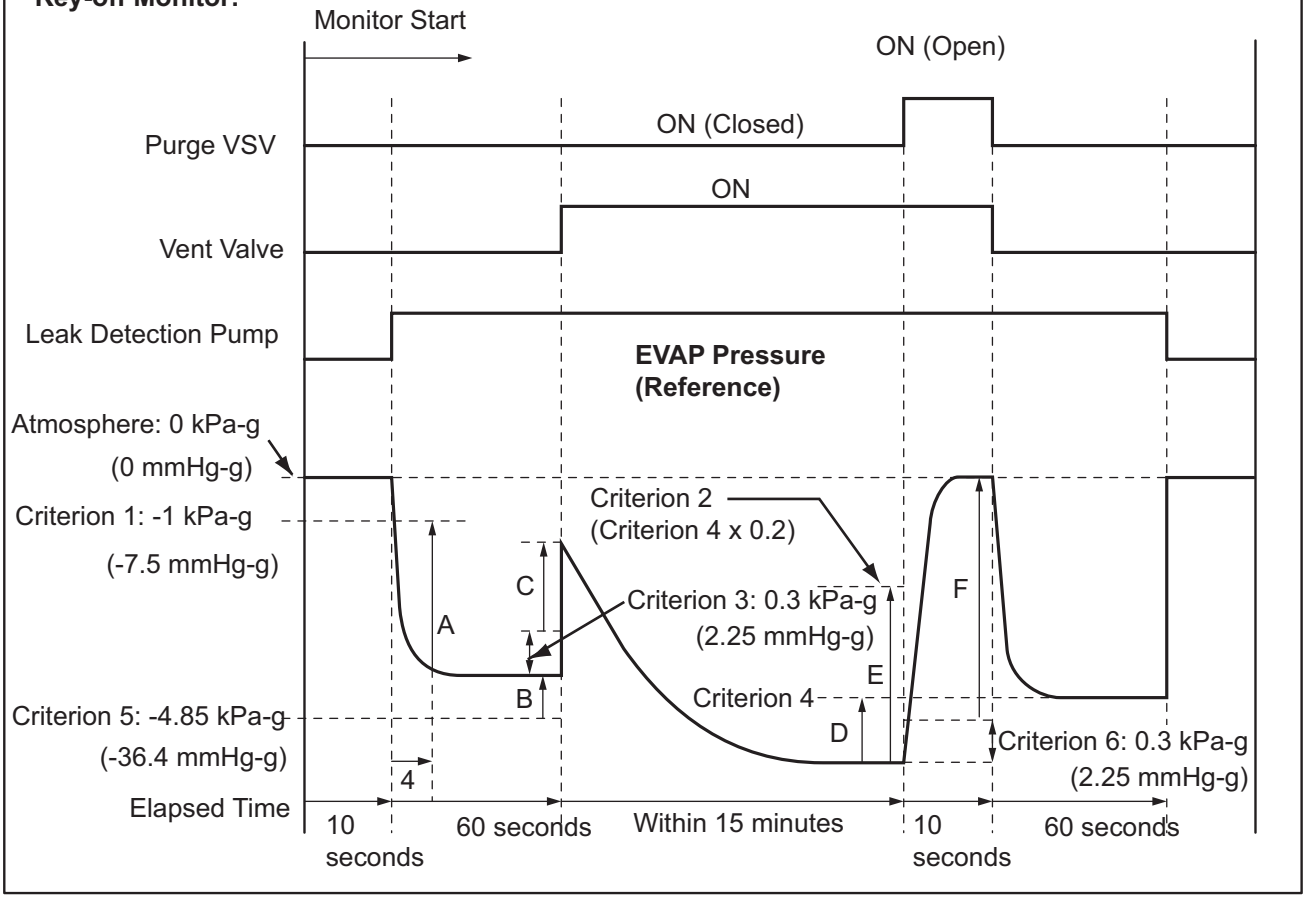

Purge Flow Monitor:

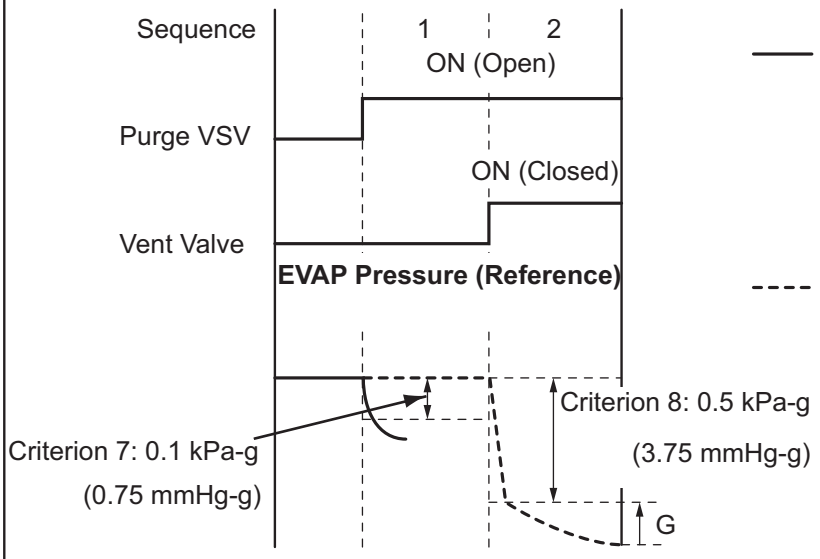

——— If pressure change in sequence 1 is greater than criterion 7, purge flow monitor is completed (functioning normally).

- - - - If pressure change in sequence 1 is smaller than criterion 7 and pressure change in sequence 2 is smaller than criterion 8, purge flow is insufficient.

Y

A106747E07

ECM Power Source Circuit

DESCRIPTION

When the ignition switch is turned ON, the battery voltage is applied to terminal IGSW of the ECM. The ECM MREL output signal causes a current to flow to the coil, closing the contacts of the EFI relay and supplying power to terminal +B of the ECM.
If the ignition switch is turned OFF, the ECM holds the EFI relay ON for a maximum of 2 seconds to allow for the initial setting of the throttle valve.

WIRING DIAGRAM

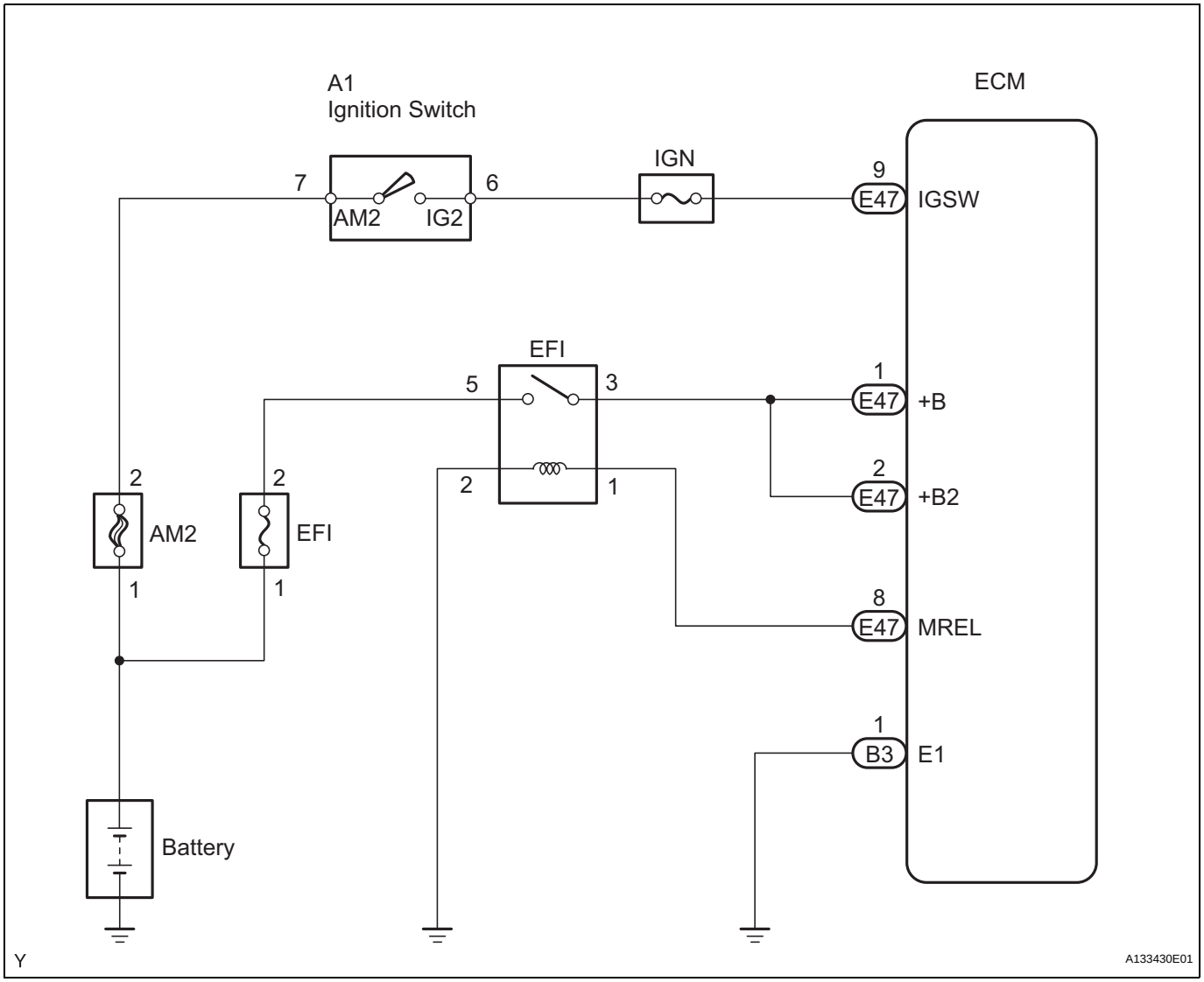

ES

INSPECTION PROCEDURE

1 INSPECT ECM (+B VOLTAGE)

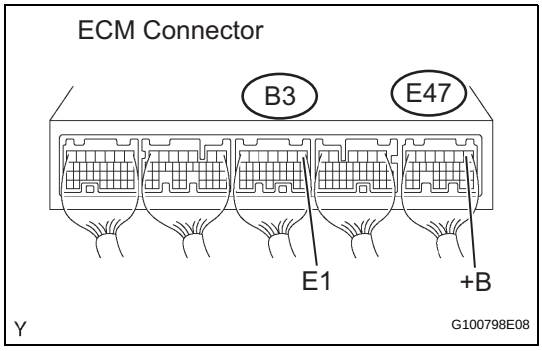

(a) Turn the ignition switch ON.
(b) Measure the voltage between the terminals of the E47 and B3 ECM connectors.
Standard Voltage

Tester Connections	Specified Conditions
+B (E47-1) - E1 (B3-1)	11 to 14 V

OK → **PROCEED TO NEXT CIRCUIT INSPECTION SHOWN IN PROBLEM SYMPTOMS TABLE**

NG

2 CHECK HARNESS AND CONNECTOR (ECM - BODY GROUND)

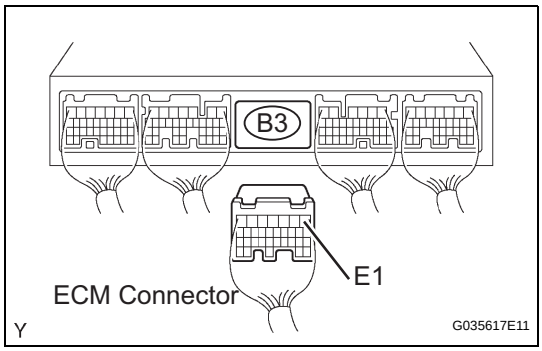

(a) Disconnect the B3 ECM connector.
(b) Check the resistance.
Standard Resistance (Check for open)

Tester Connections	Specified Conditions
E1 (B3-1) - Body ground	Below 1 Ω

(c) Reconnect the ECM connector.

NG → **REPAIR OR REPLACE HARNESS OR CONNECTOR**

OK

3 INSPECT ECM (IGSW VOLTAGE)

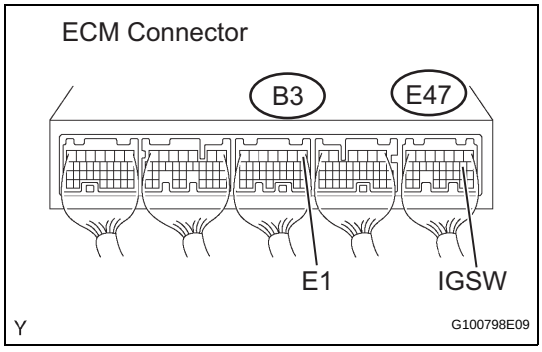

(a) Turn the ignition switch ON.
(b) Measure the voltage between the terminals of the E47 and B3 ECM connectors.
Standard Voltage

Tester Connections	Specified Conditions
IGSW (E47-9) - E1 (B3-1)	11 to 14 V

OK → **Go to step 6**

NG

4 CHECK FUSE (IGN FUSE)

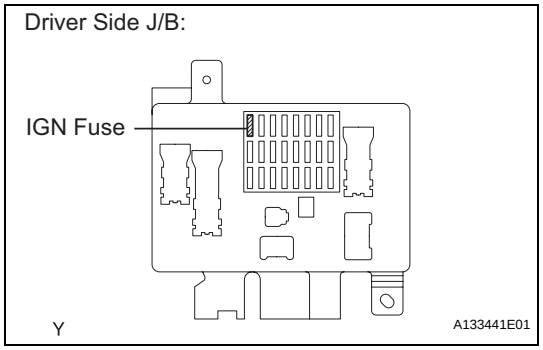

(a) Remove the IGN fuse from the driver side J/B.
(b) Check the IGN fuse resistance.
Standard Resistance:
Below 1 Ω
(c) Reinstall the IGN fuse.

NG → **CHECK FOR SHORT IN ALL HARNESSES AND CONNECTORS CONNECTED TO FUSE AND REPLACE FUSE**

OK

5 INSPECT IGNITION OR STARTER SWITCH ASSEMBLY

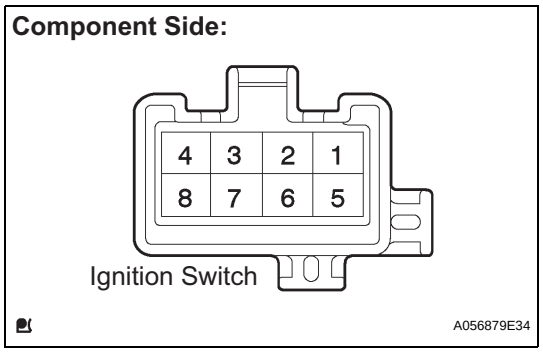

(a) Disconnect the A1 ignition switch connector.
(b) Check the resistance.
Standard Resistance

Ignition Switch Positions	Tester Connections	Specified Conditions
LOCK	All Terminals	10 kΩ or higher
ACC	2 - 4	Below 1 Ω
ON	1 - 2, 1 - 4, 5 - 6	
START	1 - 3, 1 - 4, 3 - 4, 5 - 6, 5 - 7, 6 - 7	

(c) Reconnect the ignition switch connector.

NG → **REPLACE IGNITION OR STARTER SWITCH ASSEMBLY (See page ST-19)**

OK

CHECK AND REPLACE HARNESS AND CONNECTOR (BATTERY - IGNITION SWITCH, IGNITION SWITCH - ECM)

6 INSPECT ECM (MREL VOLTAGE)

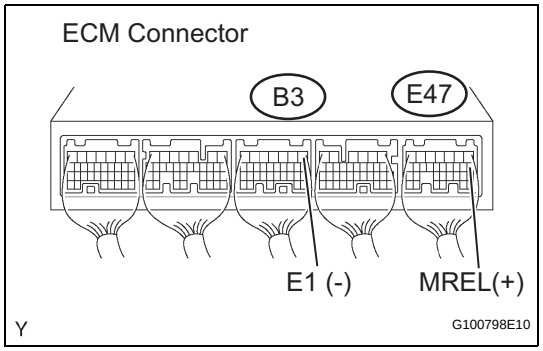

(a) Turn the ignition switch ON.
(b) Measure the voltage between the terminals of the B3 and E47 ECM connectors.
Standard Voltage

Tester Connections	Specified Conditions
MREL (E47-8) - E1 (B3-1)	11 to 14 V

NG → **REPLACE ECM (See page ES-446)**

ES

OK

7	CHECK FUSE (EFI FUSE)

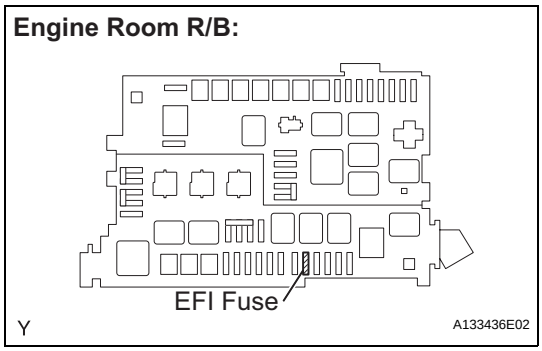

(a) Remove the EFI fuse from the engine room R/B.
(b) Check the EFI fuse resistance.
Standard Resistance:
Below 1 Ω
(c) Reinstall the EFI fuse.

NG → **CHECK FOR SHORT IN ALL HARNESSES AND CONNECTORS CONNECTED TO FUSE AND REPLACE FUSE**

ES

OK

8	INSPECT EFI RELAY

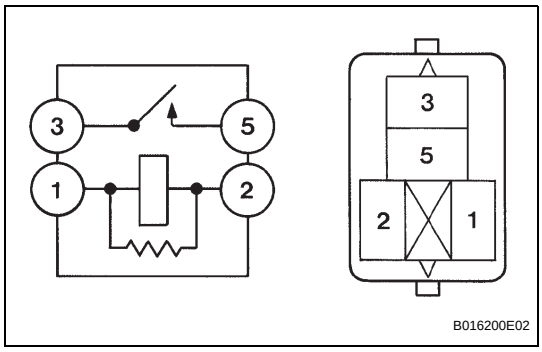

(a) Remove the EFI relay from the engine room R/B.
(b) Check the EFI relay resistance.
Standard Resistance

Tester Connections	Specified Conditions
3 - 5	10 kΩ or higher
	Below 1 Ω (when battery voltage applied to terminals 1 and 2)

(c) Reinstall the EFI relay.

NG → **REPLACE EFI RELAY**

OK

9	CHECK HARNESS AND CONNECTOR (EFI RELAY- ECM, EFI RELAY - BODY GROUND)

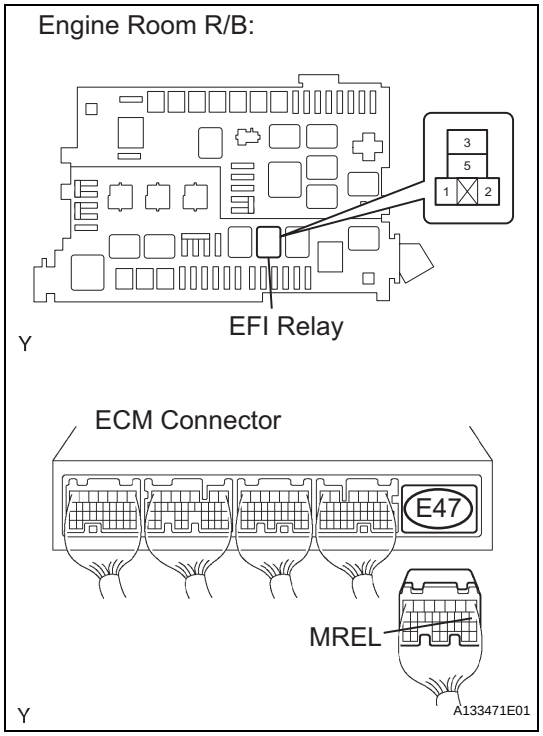

(a) Check the harness and connector between the EFI relay and ECM.
  (1) Remove the EFI relay from the engine room R/B.
  (2) Disconnect the E47 ECM connector.
  (3) Check the resistance.

Standard Resistance (Check for open)

Tester Connections	Specified Conditions
EFI relay (1) - MREL (E47-8)	Below 1 Ω

Standard Resistance (Check for short)

Tester Connections	Specified Conditions
EFI relay (1) or MREL (E47-8) - Body ground	10 kΩ or higher

  (4) Reinstall the EFI relay.
  (5) Reconnect the ECM connector.

(b) Check the harness and connector between the EFI relay and body ground.
  (1) Remove the EFI relay from the engine room R/B.
  (2) Check the resistance.

Standard Resistance (Check for open)

Tester Connections	Specified Conditions
EFI relay (2) - Body ground	Below 1 Ω

  (3) Reinstall the EFI relay.

NG → **REPAIR OR REPLACE HARNESS OR CONNECTOR**

OK

CHECK AND REPAIR HARNESS AND CONNECTOR (TERMINAL +B OF ECM - BATTERY POSITIVE TERMINAL)

ES

VC Output Circuit

DESCRIPTION

The ECM constantly generates 5 V power from the battery voltage supplied to the +B (BATT) terminal to operate the microprocessor. The ECM also provides this power to the sensors through the VC output circuit.

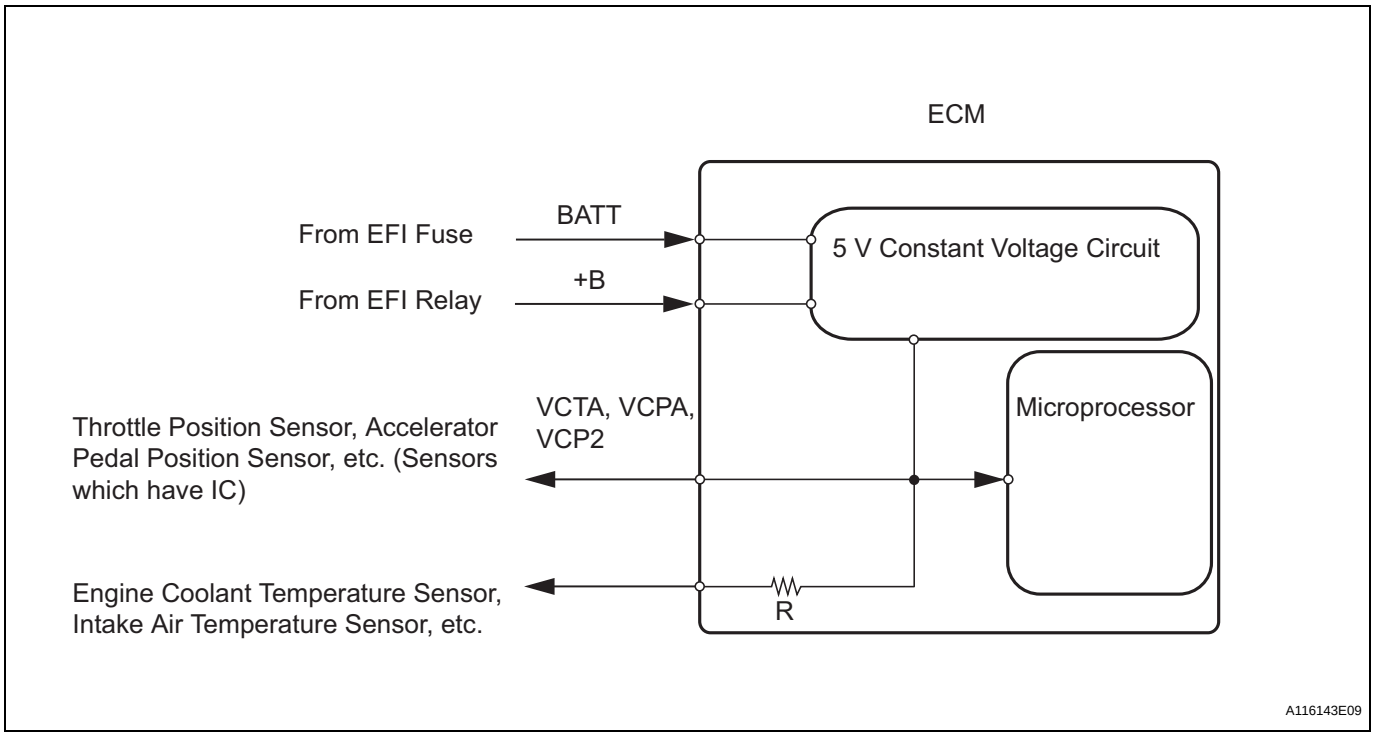

When the VC circuit is short-circuited, the microprocessor in the ECM and sensors that are supplied power through the VC circuit are inactivated because the power is not supplied from the VC circuit. Under this condition, the system does not start up and the MIL does not illuminate even if the system malfunctions.

HINT:

Under normal conditions, the MIL is illuminated for several seconds when the ignition switch is first turned ON. The MIL goes off when the engine is started.

WIRING DIAGRAM

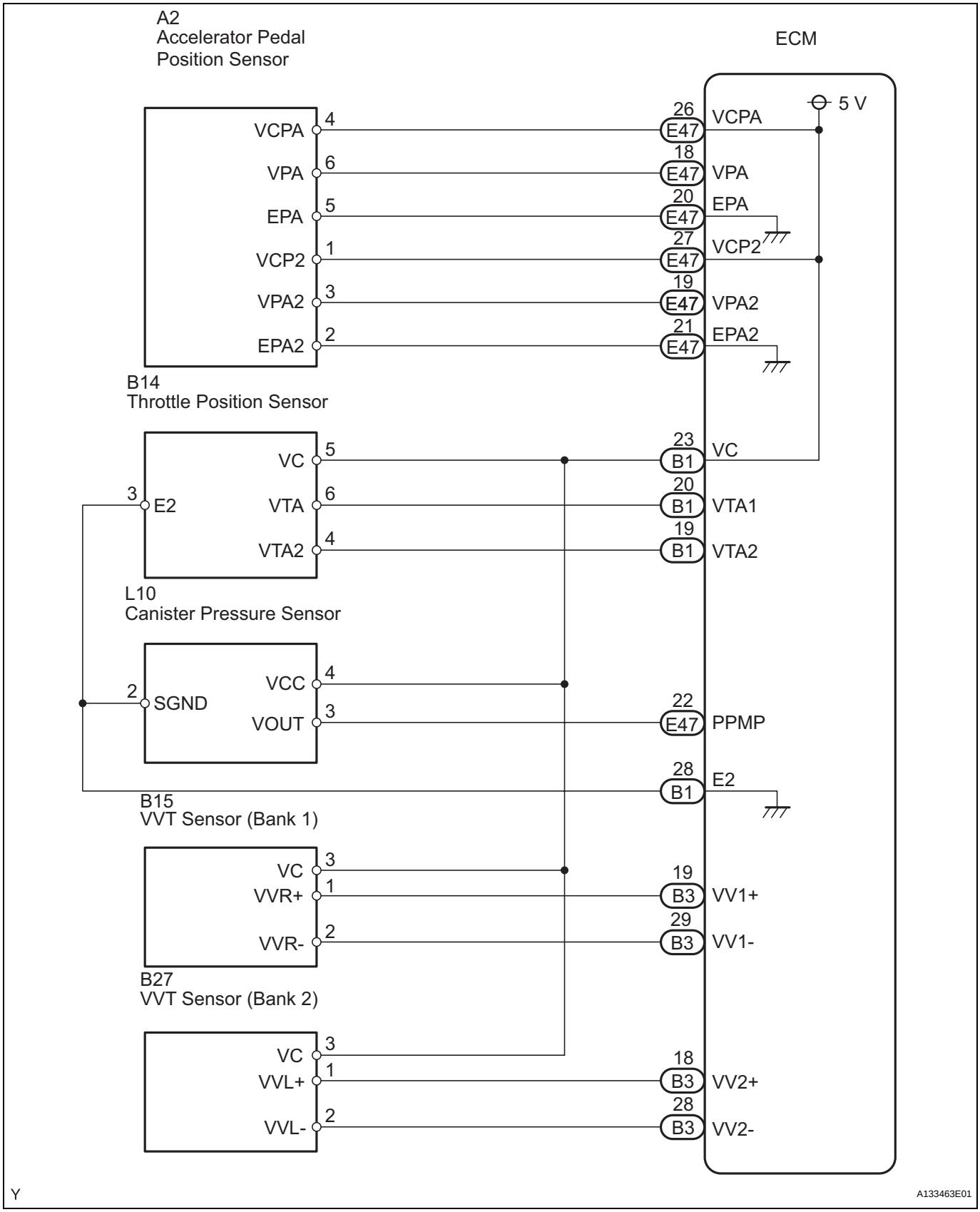

INSPECTION PROCEDURE

1 CHECK MIL

(a) Check that the Malfunction Indicator Lamp (MIL) lights up when turning the ignition switch ON.
OK:
MIL lights up

OK → **SYSTEM OK**

NG

2 CHECK COMMUNICATION BETWEEN INTELLIGENT TESTER AND ECM

(a) Connect an intelligent tester to the DLC3.
(b) Turn the ignition switch ON and turn the tester ON.
(c) Check the communication between an intelligent tester and ECM.
Result

Result	Proceed to
Communication is possible	A
Communication is not possible	B

A → **GO TO MIL CIRCUIT (See page ES-404)**

B

3 CHECK MIL (THROTTLE BODY)

(a) Disconnect the throttle body connector.
(b) Turn the ignition switch ON.
(c) Check the MIL.
Result

Result	Proceed to
MIL illuminates	A
MIL does not illuminate	B

(d) Reconnect the throttle body connector.

A → **REPLACE THROTTLE WITH MOTOR BODY ASSEMBLY (See page ES-428)**

B

4 CHECK MIL (ACCELERATOR PEDAL)

(a) Disconnect the accelerator pedal connector.
(b) Turn the ignition switch ON.
(c) Check the MIL.

Result

Result	Proceed to
MIL illuminates	A
MIL does not illuminate	B

(d) Reconnect the accelerator pedal connector.

A → **REPLACE ACCELERATOR PEDAL ROD ASSEMBLY (See page ES-449)**

B

5 CHECK MIL (CANISTER PUMP MODULE)

(a) Disconnect the canister pump module connector.
(b) Turn the ignition switch ON.
(c) Check the MIL.

Result

Result	Proceed to
MIL illuminates	A
MIL does not illuminate	B

(d) Reconnect the canister pump module connector.

A → **REPLACE CHARCOAL CANISTER ASSEMBLY (See page EC-9)**

B

6 CHECK MIL (VVT SENSOR FOR BANK 1)

(a) Disconnect the VVT sensor (bank 1) connector.
(b) Turn the ignition switch ON.
(c) Check the MIL.

Result

Result	Proceed to
MIL illuminates	A
MIL does not illuminate	B

(d) Reconnect the VVT sensor connector.

A → **REPLACE VVT SENSOR FOR BANK 1 (See page ES-417)**

B

7 CHECK MIL (VVT SENSOR FOR BANK 2)

(a) Disconnect the VVT sensor (bank 2) connector.
(b) Turn the ignition switch ON.
(c) Check the MIL.

Result

Result	Proceed to
MIL illuminates	A
MIL does not illuminate	B

(d) Reconnect the VVT sensor connector.

A → **REPLACE VVT SENSOR FOR BANK 2 (See page ES-417)**

B

ES

8 CHECK HARNESS AND CONNECTOR (VC OUTPUT CIRCUIT)

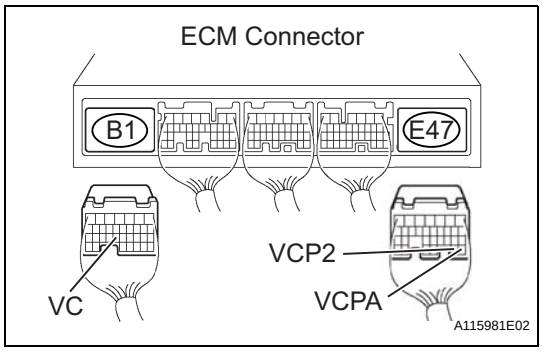

(a) Disconnect the throttle body connector.
(b) Disconnect the accelerator pedal connector.
(c) Disconnect the canister pump module connector.
(d) Disconnect the ECM connector.
(e) Check the resistance.

Standard Resistance (Check for short)

Tester Connections	Specified Conditions
VC (B1-23) - Body ground	10 kΩ or higher
VCPA (E47-26) - Body ground	
VCP2 (E47-27) - Body ground	

(f) Reconnect the throttle body connector.
(g) Reconnect the accelerator pedal connector.
(h) Reconnect the canister pump module connector.
(i) Reconnect the ECM connector.

NG → **REPAIR OR REPLACE HARNESS OR CONNECTOR**

OK

REPLACE ECM (See page ES-446)

Fuel Pump Control Circuit

DESCRIPTION

Refer to DTC P0230 (See page ES-164).

WIRING DIAGRAM

Refer to DTC P0230 (See page ES-166).

INSPECTION PROCEDURE

ES

1	CHECK FUEL PUMP OPERATION

(a) Check if there is pressure in the fuel inlet hose.
HINT:
If there is fuel pressure, you will hear the sound of fuel flowing.

OK → **Go to step 10**

NG

2	PERFORM ACTIVE TEST USING INTELLIGENT TESTER (OPERATE CIRCUIT OPENING RELAY)

(a) Connect an intelligent tester to the DLC3.
(b) Turn the ignition switch ON and turn the tester ON.
(c) Select the following menu items: DIAGNOSIS / ENHANCED OBD II / ACTIVE TEST / FUEL PUMP/ SPD.
(d) Check whether operating sounds can be heard while operating the relay using the tester.
OK:
Operating sounds can be heard from relay.

OK → **Go to step 5**

NG

3	INSPECT CIRCUIT OPENING RELAY

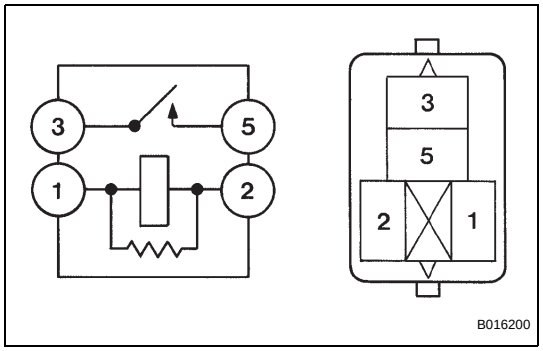

(a) Remove the circuit opening relay from the engine room R/B.
(b) Check the circuit opening relay resistance.
Standard Resistance

Tester Connections	Specified Conditions
3 - 5	10 kΩ or higher
3 - 5	Below 1 Ω (when battery voltage applied to terminals 1 and 2)

(c) Reinstall the circuit opening relay.

NG → **REPLACE CIRCUIT OPENING RELAY**

OK

4 INSPECT ECM (FC VOLTAGE)

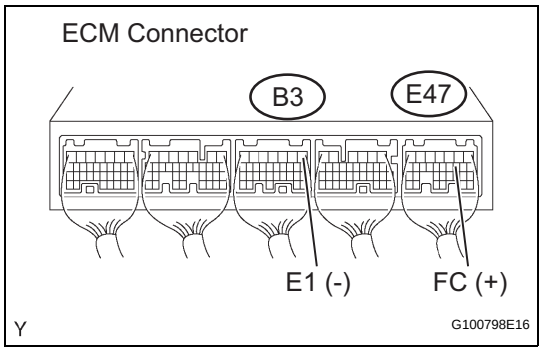

(a) Turn the ignition switch ON.
(b) Measure the voltage between the terminals of the B3 and E47 ECM connectors.
Standard Voltage

Tester Connections	Specified Conditions
FC (E47-10) - E1 (B3-1)	11 to 14 V

OK → **REPLACE ECM (See page ES-446)**

NG

CHECK AND REPLACE HARNESS AND CONNECTOR (ECM - CIRCUIT OPENING RELAY - IGNITION SWITCH)

5 INSPECT ECM POWER SOURCE CIRCUIT

Inspect the ECM power source circuit (See page ES-384).

NG → **REPAIR OR REPLACE HARNESS OR CONNECTOR**

OK

6 INSPECT FUEL PUMP RELAY ASSEMBLY

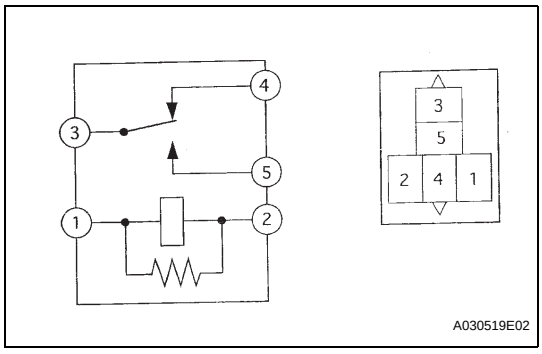

(a) Remove the fuel pump relay from the engine room R/B.
(b) Check the fuel pump relay resistance.
Standard Resistance

Tester Connections	Specified Conditions
3 - 4	Below 1 Ω
3 - 5	10 kΩ or higher
3 - 4	10 kΩ or higher (when battery voltage applied to terminals 1 and 2)
3 - 5	Below 1 Ω (when battery voltage applied to terminals 1 and 2)

(c) Reinstall the fuel pump relay.

NG → **REPLACE FUEL PUMP RELAY ASSEMBLY**

OK

7	INSPECT FUEL PUMP ASSEMBLY

Component Side:

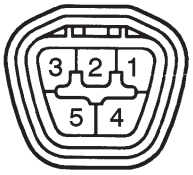

Fuel Pump

A074356E22

(a) Inspect the fuel pump resistance.
  (1) Measure the resistance between terminals 4 and 5.
  Standard Resistance:
  0.2 to 3.0 Ω at 20°C (68°F)

(b) Inspect the fuel pump operation.
  (1) Apply battery voltage to both terminals. Check that the pump operates.
  NOTICE:
  - **These tests must be done quickly (within 10 seconds) to prevent the coil from burning out.**
  - **Keep the fuel pump as far away from the battery as possible.**
  - **Always do the switching at the battery side.**

NG → **REPLACE FUEL PUMP ASSEMBLY (See page FU-27)**

OK

8	CHECK HARNESS AND CONNECTOR (FUEL PUMP - FUEL PUMP RELAY, FUEL PUMP - BODY GROUND)

Wire Harness Side:

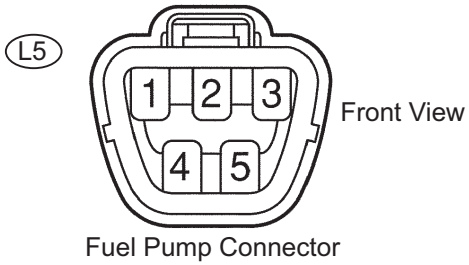

Fuel Pump Connector

P

Engine Room R/B:

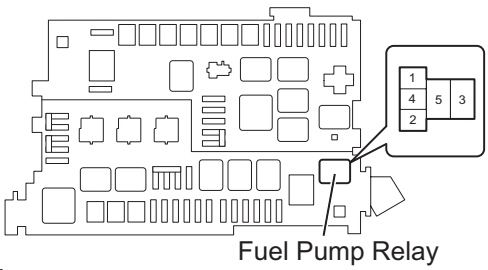

Fuel Pump Relay

Y

A133464E01

(a) Check the harness and connector between the fuel pump and fuel pump relay.
  (1) Disconnect the L5 fuel pump connector.
  (2) Remove the fuel pump relay from the engine room R/B.
  (3) Check the resistance.
  Standard Resistance (Check for open)

Tester Connections	Specified Conditions
Fuel pump (L5-4) - Fuel pump relay (4)	Below 1 Ω

Standard Resistance (Check for short)

Tester Connections	Specified Conditions
Fuel pump (L5-4) or Fuel pump relay (4) - Body ground	10 kΩ or higher

  (4) Reconnect the fuel pump connector.
  (5) Reinstall the fuel pump relay.

(b) Check the harness and connector between the fuel pump and body ground.
  (1) Disconnect the fuel pump connector.
  (2) Check the resistance.
  Standard Resistance (Check for open)

Tester Connections	Specified Conditions
Fuel pump (L5-5) - Body ground	Below 1 Ω

  (3) Reconnect the fuel pump connector.

NG → REPAIR OR REPLACE HARNESS OR CONNECTOR

OK

9 CHECK HARNESS AND CONNECTOR (CIRCUIT OPENING RELAY - FUEL PUMP RELAY)

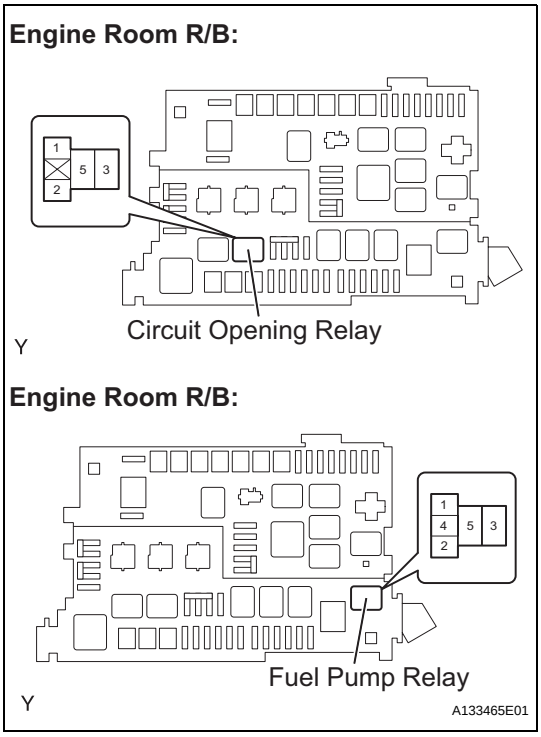

(a) Remove the circuit opening relay from the engine room R/B.
(b) Remove the fuel pump relay from the engine room R/B.
(c) Check the resistance.

Standard Resistance (Check for open)

Tester Connections	Specified Conditions
Circuit opening relay (3) - Fuel pump relay (3)	Below 1 Ω

Standard Resistance (Check for short)

Tester Connections	Specified Conditions
Circuit opening relay (3) or Fuel pump relay (3) - Body ground	10 kΩ or higher

(d) Reinstall the circuit opening relay.
(e) Reinstall the fuel pump relay.

NG → REPAIR OR REPLACE HARNESS OR CONNECTOR

OK

CHECK AND REPAIR HARNESS AND CONNECTOR (EFI RELAY - CIRCUIT OPENING RELAY)

10 INSPECT FUEL PUMP RELAY ASSEMBLY

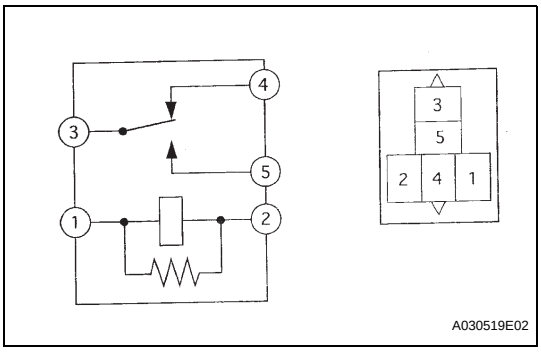

(a) Remove the fuel pump relay from the engine room R/B.
(b) Check the fuel pump relay resistance.

Standard Resistance

Tester Connections	Specified Conditions
3 - 4	Below 1 Ω
3 - 5	10 kΩ or higher
3 - 4	10 kΩ or higher (when battery voltage applied to terminals 1 and 2)
3 - 5	Below 1 Ω (when battery voltage applied to terminals 1 and 2)

(c) Reinstall the fuel pump relay.

NG → REPLACE FUEL PUMP RELAY ASSEMBLY

OK

11 INSPECT FUEL PUMP RESISTOR (RESISTANCE)

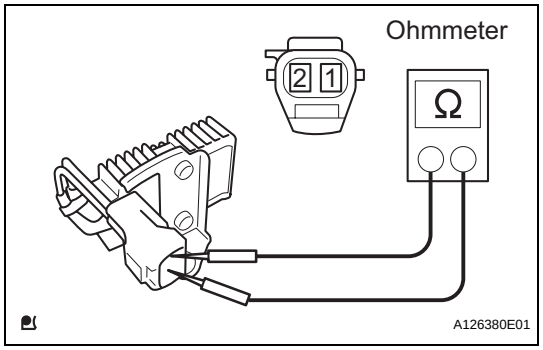

(a) Inspect the fuel pump resistor resistance.
(1) Measure the resistance.
Standard Resistance:
0.941 to 0.999 Ω at 20°C (68°F)

NG → **REPLACE FUEL PUMP RESISTOR (See page FU-36)**

OK

12 CHECK HARNESS AND CONNECTOR (FUEL PUMP RELAY - FUEL PUMP RESISTOR - FUEL PUMP)

Engine Room R/B:

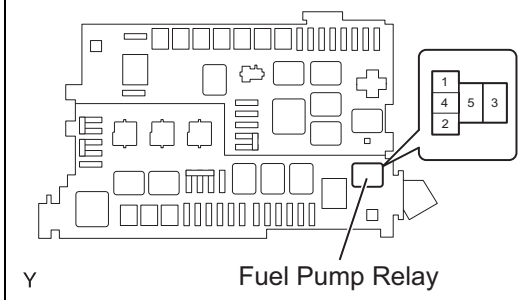

Wire Harness Side:

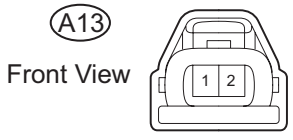

Fuel Pump Resistor Connector

Y

Wire Harness Side:

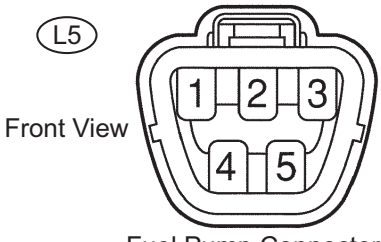

Fuel Pump Connector

P

A133466E01

(a) Check the harness and connector between the fuel pump relay and fuel pump resistor.
(1) Remove the fuel pump relay from the engine room R/B.
(2) Disconnect the A13 fuel pump resistor connector.
(3) Check the resistance.
Standard Resistance (Check for open)

Tester Connections	Specified Conditions
Fuel pump relay (5) - Fuel pump resistor (A13-1)	Below 1 Ω

Standard Resistance (Check for short)

Tester Connections	Specified Conditions
Fuel pump relay (5) or Fuel pump resistor (A13-1) - Body ground	10 kΩ or higher

(4) Reinstall the fuel pump relay.
(5) Reconnect the fuel pump resistor connector.

(b) Check the harness and connector between the fuel pump resistor and fuel pump.
(1) Disconnect the A13 fuel pump resistor connector.
(2) Disconnect the L5 fuel pump connector.
(3) Check the resistance.
Standard Resistance (Check for open)

Tester Connections	Specified Conditions
Fuel pump resistor (A13-2) - Fuel pump (L5-4)	Below 1 Ω

Standard Resistance (Check for short)

Tester Connections	Specified Conditions
Fuel pump resistor (A13-2) or Fuel pump (L5-4) - Body ground	10 kΩ or higher

(4) Reconnect the fuel pump resistor connector.
(5) Reconnect the fuel pump connector.

NG → PROCEED TO NEXT CIRCUIT INSPECTION SHOWN IN PROBLEM SYMPTOMS TABLE

NG

REPAIR OR REPLACE HARNESS OR CONNECTOR

ACIS Control Circuit

DESCRIPTION

This circuit opens and closes the Intake Air Control Valve (IACV) in response to changes in the engine load in order to increase the intake efficiency (ACIS: Acoustic Control Induction System).
When the engine speed is between 2,200 rpm and 4,100 rpm and the throttle valve opening angle is 60° or more, the ECM supplies current to the VSV (ON status), to close the IACV. Under other conditions, the VSV is usually OFF and the IACV is open.

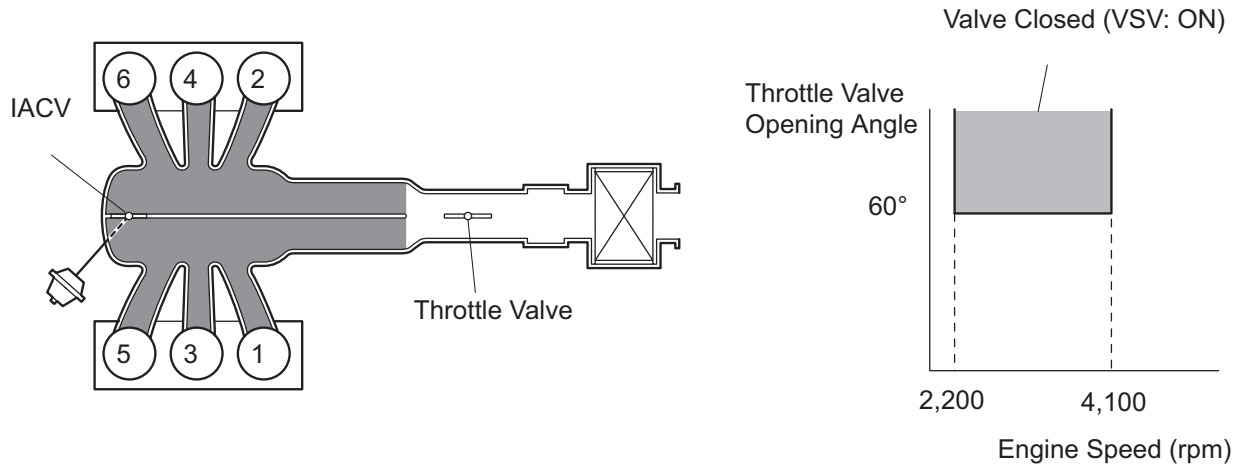

WIRING DIAGRAM

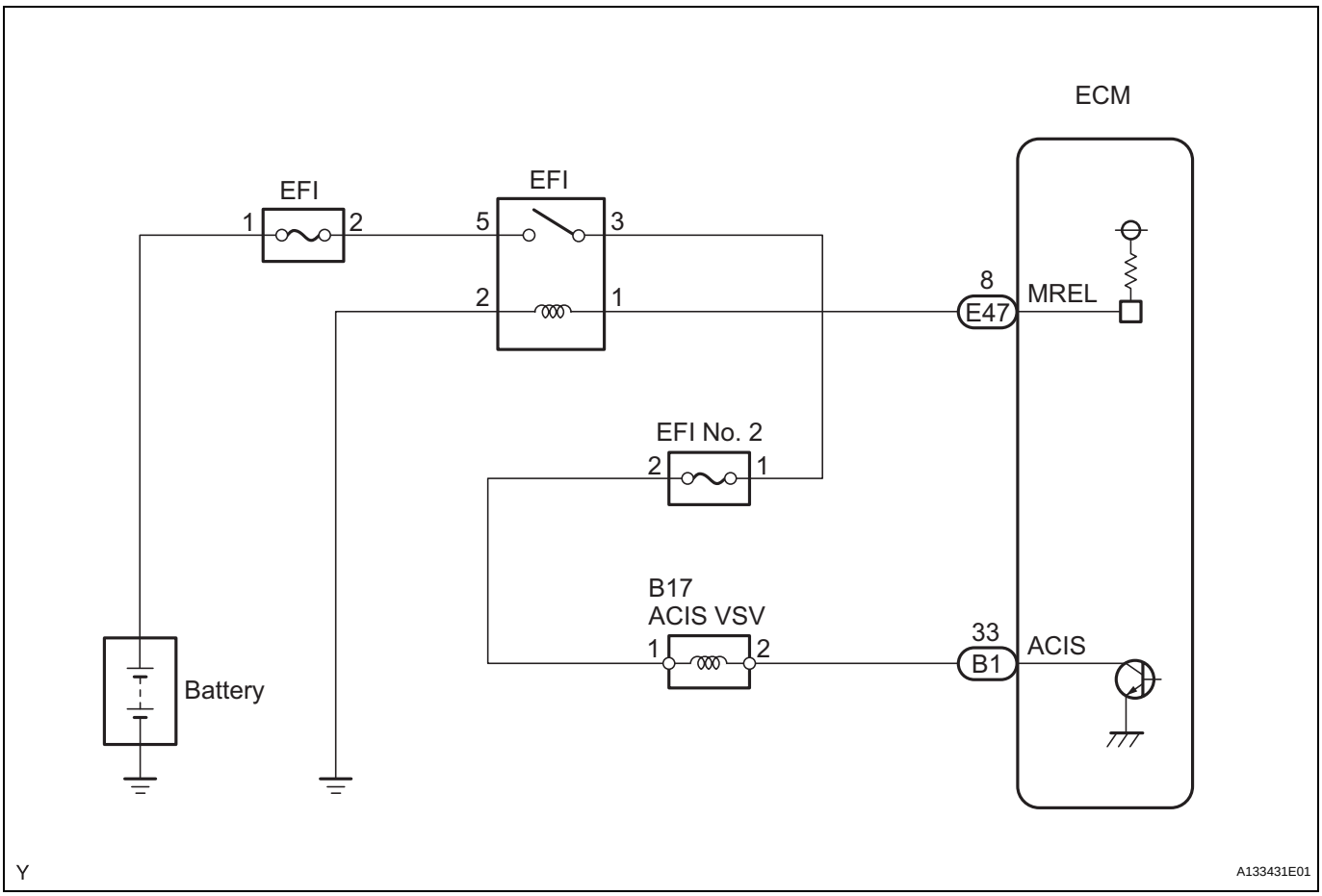

INSPECTION PROCEDURE

1	PERFORM ACTIVE TEST USING INTELLIGENT TESTER (OPERATE VSV FOR ACIS)

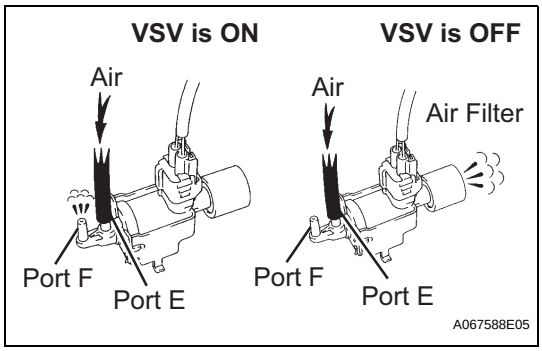

(a) Disconnect the vacuum hose.
(b) Connect an intelligent tester to the DLC3.
(c) Turn the ignition switch ON and turn the tester ON.
(d) Select the following menu items: DIAGNOSIS / ENHANCED OBD II / ACTIVE TEST / INTAKE CTL VSV1. Operate the VSV for ACIS.
(e) Check the VSV operation when it is operated using an intelligent tester.
OK

Tester Operations	Specified Conditions
VSV ON	Air from port E flows out through port F
VSV OFF	Air from port E flows out through air filter

(f) Reconnect the vacuum hose.

OK → **Go to step 4**

NG

2	CHECK VSV FOR ACIS (OPERATION)

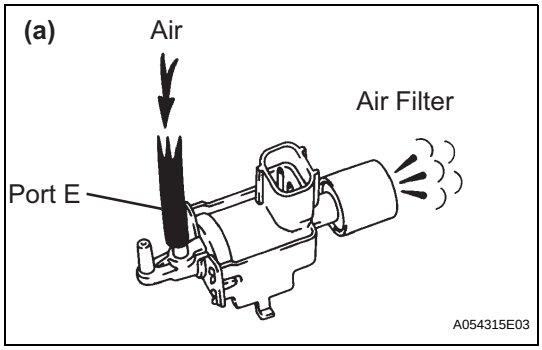

(a) Check that air flows from port E to the air filter.
OK:
Air from port E flows out through the air filter.

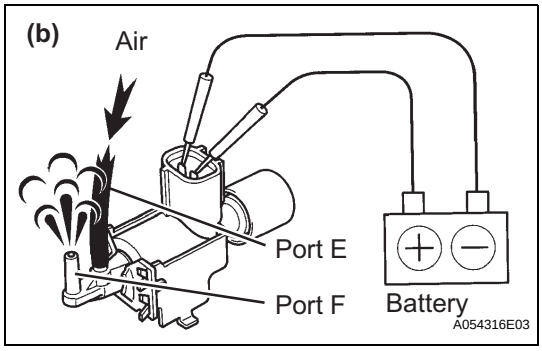

(b) Apply the battery positive voltage across the terminals.
(c) Check that air flows from port E to port F.
OK:
Air from port E flows out through port F.

NG → **REPLACE VSV FOR ACIS (See page IT-6)**

OK

3	CHECK HARNESS AND CONNECTOR (VSV FOR ACIS - ECM, VSV FOR ACIS - EFI RELAY)

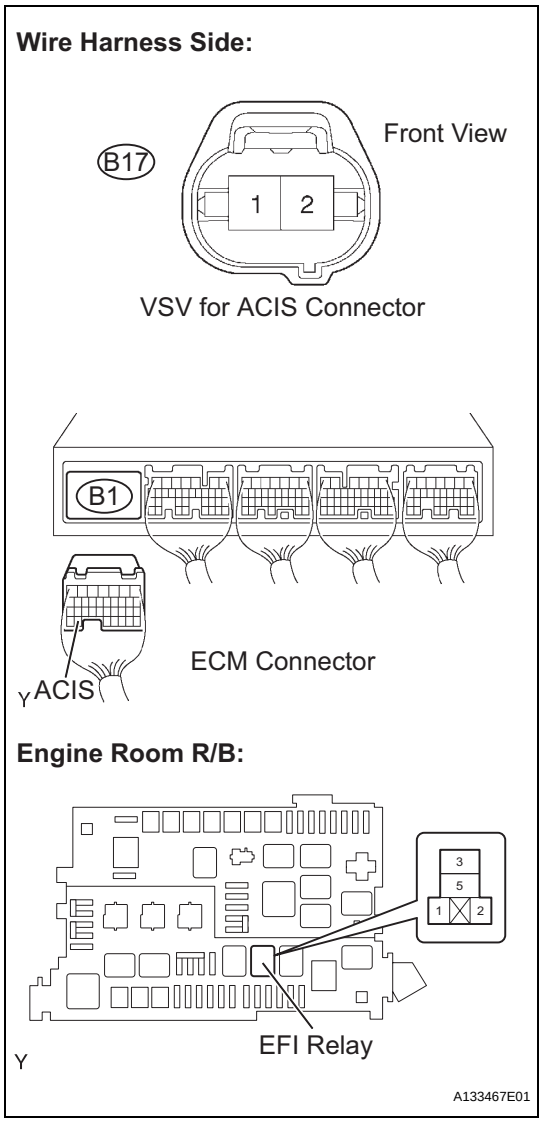

(a) Check the wire harness and connectors between the VSV for ACIS and ECM.
  (1) Disconnect the B17 VSV for ACIS connector.
  (2) Disconnect the B1 ECM connector.
  (3) Check the resistance.

Standard Resistance (Check for open)

Tester Connections	Specified Conditions
VSV for ACIS (B17-2) - ACIS (B1-33)	Below 1 Ω

Standard Resistance (Check for short)

Tester Connections	Specified Conditions
VSV for ACIS (B17-2) or ACIS (B1-33) - Body ground	10 kΩ or higher

  (4) Reconnect the VSV for ACIS connector.
  (5) Reconnect the ECM connector.

(b) Check the wire harness between the VSV for ACIS and EFI relay.
  (1) Disconnect the B17 VSV for ACIS connector.
  (2) Remove the EFI relay from the engine room R/B.
  (3) Check the resistance.

Standard Resistance (Check for open)

Tester Connections	Specified Conditions
VSV for ACIS (B17-1) - EFI relay terminal 3 of R/B	Below 1 Ω

  (4) Reconnect the VSV for ACIS connector.
  (5) Reinstall the EFI relay.

NG → **REPAIR OR REPLACE HARNESS OR CONNECTOR**

OK

4	CHECK VACUUM HOSES (INTAKE MANIFOLD - IACV, IACV - VSV FOR ACIS)

(a) Check that the vacuum hose is connected correctly.
(b) Check the vacuum hose for looseness and disconnection.
(c) Check the vacuum hose for cracks, holes and damage.

NG → **REPAIR OR REPLACE VACUUM HOSES**

OK

5	INSPECT INTAKE AIR CONTROL VALVE (INTAKE AIR SURGE TANK)

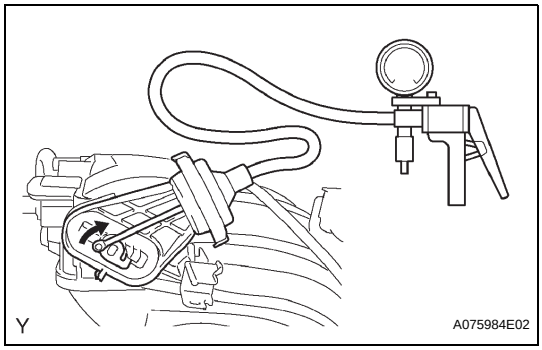

(a) Check that the lever moves when a vacuum of 26.6 kPa (200 mmHg) is applied with the vacuum gauge on.
OK:
Lever moves

(b) Check that the vacuum of 26.6 kPa (200 mmHg) is sustained for 1 minute in the above state.
OK:
Vacuum is sustained

NG → **REPLACE INTAKE AIR CONTROL VALVE (INTAKE AIR SURGE TANK)**

OK

REPLACE ECM (See page ES-446)

MIL Circuit

DESCRIPTION

The MIL (Malfunction Indicator Lamp) is used to indicate vehicle malfunction detections by the ECM.
By turning the ignition switch ON, power is supplied to the MIL circuit, and the ECM provides the circuit ground which illuminates the MIL.
The MIL operation can be checked visually: When the ignition switch is first turned ON, the MIL should be illuminated and should then turn OFF. If the MIL remains illuminated or is not illuminated, conduct the following troubleshooting procedure using an intelligent tester.

WIRING DIAGRAM

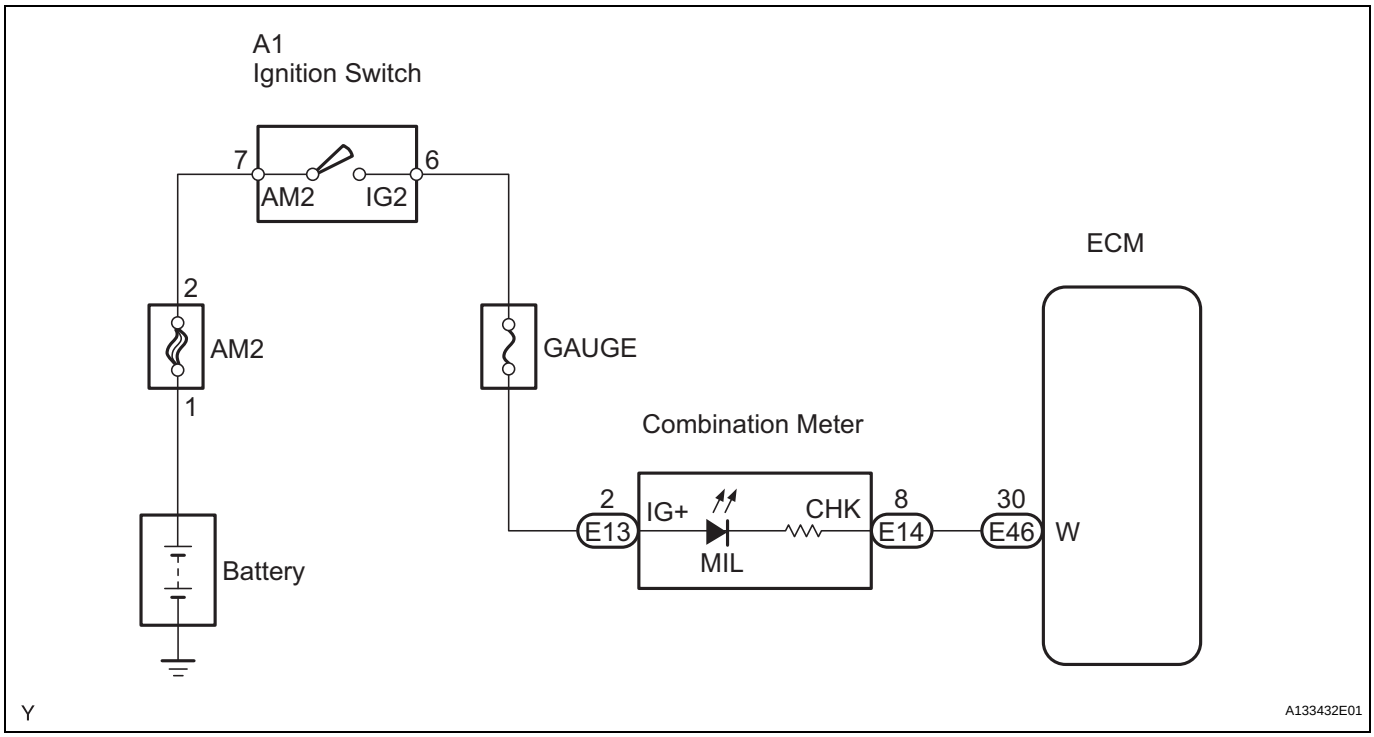

INSPECTION PROCEDURE

1	CHECK THAT MIL IS ILLUMINATED

(a) Perform troubleshooting in accordance with the chart below.
Result

MIL Condition	Proceed To
MIL remains ON	A
MIL does not illuminate	B

B → **Go to step 4**

A

2	CHECK WHETHER MIL TURNS OFF

(a) Connect an intelligent tester to the DLC3.
(b) Turn the ignition switch ON.
(c) Turn the tester ON.
(d) Check whether any DTCs have been stored (See page ES-38). Note them down if necessary.
(e) Clear DTCs (See page ES-38).
(f) Check if the MIL turns off.
OK:
MIL should turn off.

OK → **REPAIR CIRCUITS INDICATED BY OUTPUT DTCS (See page ES-57)**

NG

3	CHECK HARNESS AND CONNECTOR (CHECK FOR SHORT IN WIRE HARNESS)

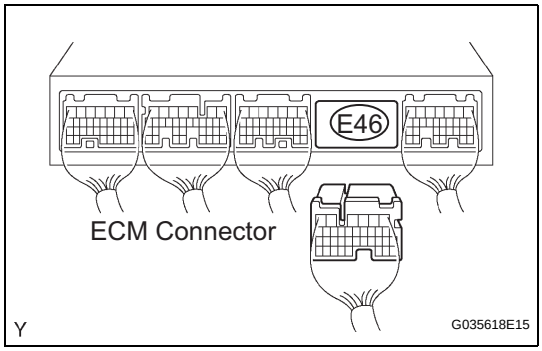

(a) Disconnect the E46 ECM connector.
(b) Turn the ignition switch ON.
(c) Check that MIL is not illuminated.
OK:
MIL is not illuminated.
(d) Reconnect the ECM connector.

OK → **REPLACE ECM (See page ES-446)**

NG

CHECK AND REPAIR HARNESS AND CONNECTOR (COMBINATION METER - ECM)

4	CHECK THAT MIL IS ILLUMINATED

(a) Check if the MIL is illuminated when the ignition switch is turns ON.
OK:
MIL should be illuminated.

OK → **SYSTEM OK**

NG

5	CHECK THAT ENGINE STARTS

(a) Turn the ignition switch ON.
(b) Start the engine.

Result

Result	Proceed To
Engine starts	A
Engine does not start*	B

HINT:
*: An intelligent tester cannot communicate with the ECM.

B → **GO TO VC OUTPUT CIRCUIT (See page ES-389)**

A

ES

6 INSPECT COMBINATION METER ASSEMBLY (MIL CIRCUIT)

(a) See the combination meter troubleshooting procedure (See page ME-9).

NG → **REPAIR OR REPLACE BULB OR COMBINATION METER ASSEMBLY**

OK

CHECK AND REPAIR HARNESS AND CONNECTOR (COMBINATION METER - ECM)

MASS AIR FLOW METER

COMPONENTS

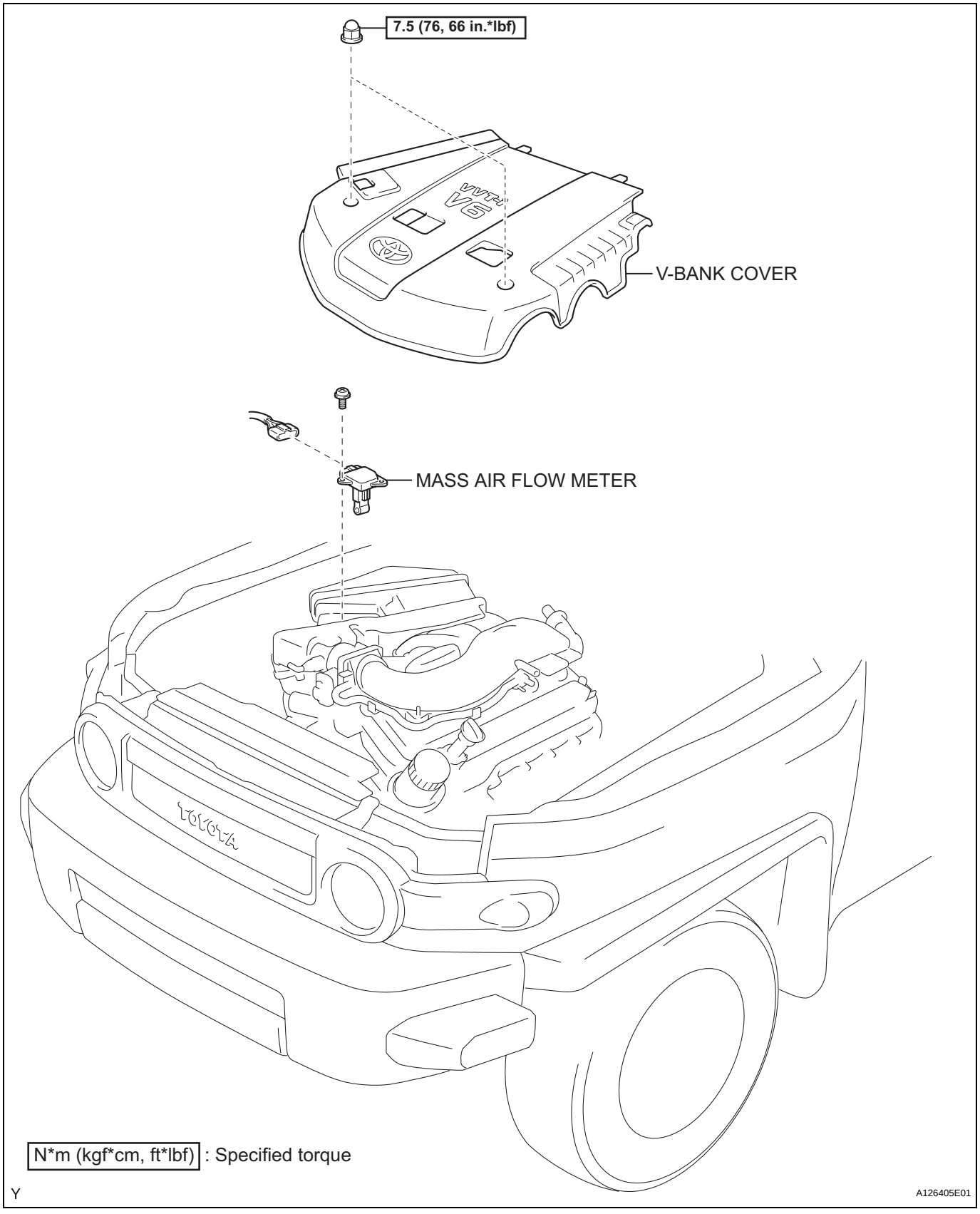

ON-VEHICLE INSPECTION

NOTICE:

- **Perform the MAF meter inspection according to the procedures below.**
- **Only replace the MAF meter when both the LONG FT#1 value and MAF value in the DATA LIST (with the engine stopped) are not within the normal operating range.**

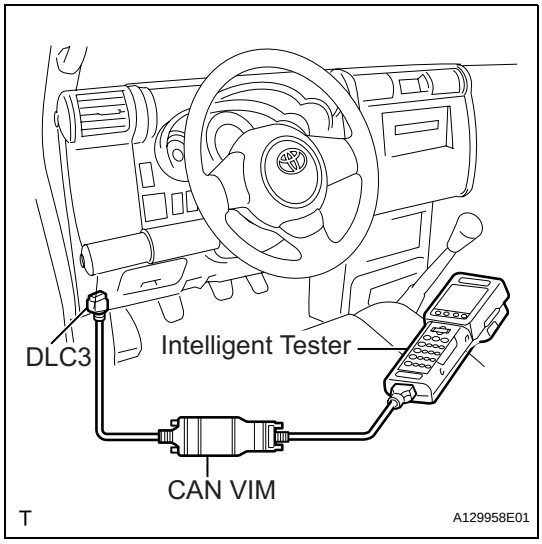

1. INSPECT MASS AIR FLOW METER

(a) Perform the confirmation driving pattern.

(1) Connect the intelligent tester to the DLC3.
(2) Turn the ignition switch ON.
(3) Turn the intelligent tester ON.
(4) Clear the DTCs (see page ES-38).
(5) Start the engine and warm it up with all accessory switches OFF (until the engine coolant temperature is 75°C (167°F) or more).
(6) Drive the vehicle at 31 mph (50 km/h) or more for 3 or more *1.
(7) Let the engine idle (accelerator pedal fully released) for 2 minutes or more *2.
(8) Perform steps *1 and *2 at least 3 times.

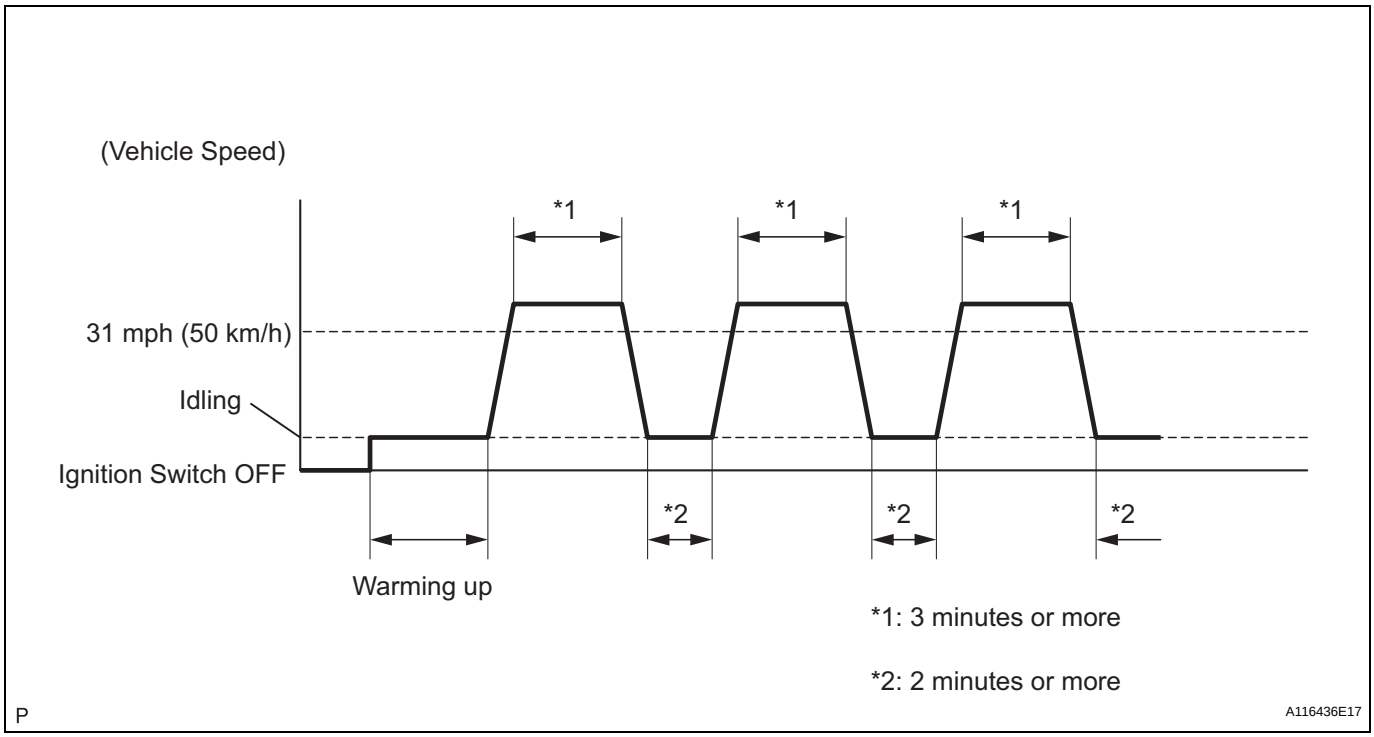

(b) Read the value using intelligent tester (LONG FT#1).

(1) Select the following menu items: DIAGNOSIS / ENHANCED OBD II / DATA LIST / PRIMARY / LONG FT#1.
(2) Read the values displayed on the tester.
Standard value:
Within -15 to +15 %

If the result is not within the specified range, perform the inspection below.

(c) Read the value using intelligent tester (MAF).

NOTICE:

- **Turn off the engine.**
- **Perform the inspection with the vehicle indoors and on a level surface.**
- **Perform the inspection of the MAF meter while it is installed in the air cleaner case (installed on the vehicle).**
- **During the test, do not use the exhaust air duct to perform suction on the exhaust pipe.**

(1) Turn the ignition switch to ACC.

(2) Turn the ignition switch ON (do not run the engine).

(3) Turn the tester ON.

(4) Select the following menu items: DIAGNOSIS / ENHANCED OBD II / DATA LIST / PRIMARY / MAF.

(5) Wait 30 seconds, and read the values on the intelligent tester.

Standard condition:

Less than 0.72 g/sec

- If the result is not as specified, replace the MAF meter.
- If the result is within the specified range, inspect the cause of the extremely rich or lean air fuel ratio.

REMOVAL

1. **DISCONNECT CABLE FROM NEGATIVE BATTERY TERMINAL**
2. **REMOVE V-BANK COVER (See page ES-428)**
3. **REMOVE MASS AIR FLOW METER**
   (a) Disconnect the connector.
   (b) Remove the 2 screws, then remove the mass air flow meter.

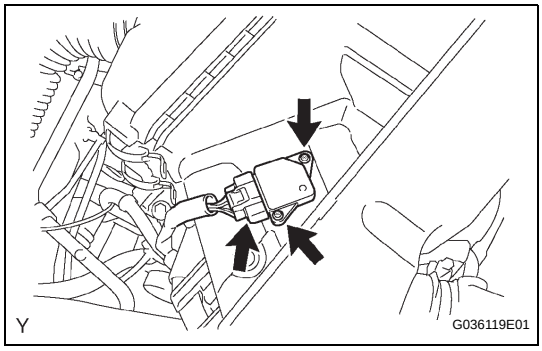

INSTALLATION

1. **INSTALL MASS AIR FLOW METER**
   (a) Install the mass air flow meter with 2 screws.
   (b) Connect the connector.
2. **CONNECT CABLE TO NEGATIVE BATTERY TERMINAL**
   Torque: 3.9 N*m (40 kgf*cm, 35 in.*lbf)
3. **INSTALL V-BANK COVER (See page ES-431)**

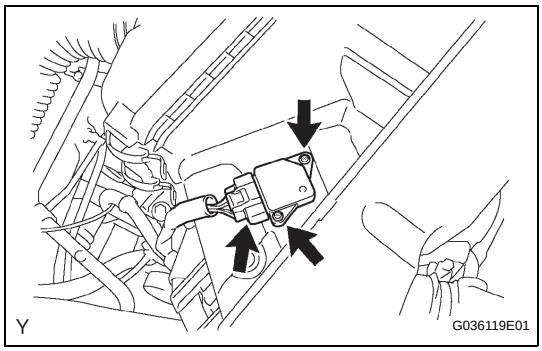

CAMSHAFT TIMING OIL CONTROL VALVE ASSEMBLY

COMPONENTS

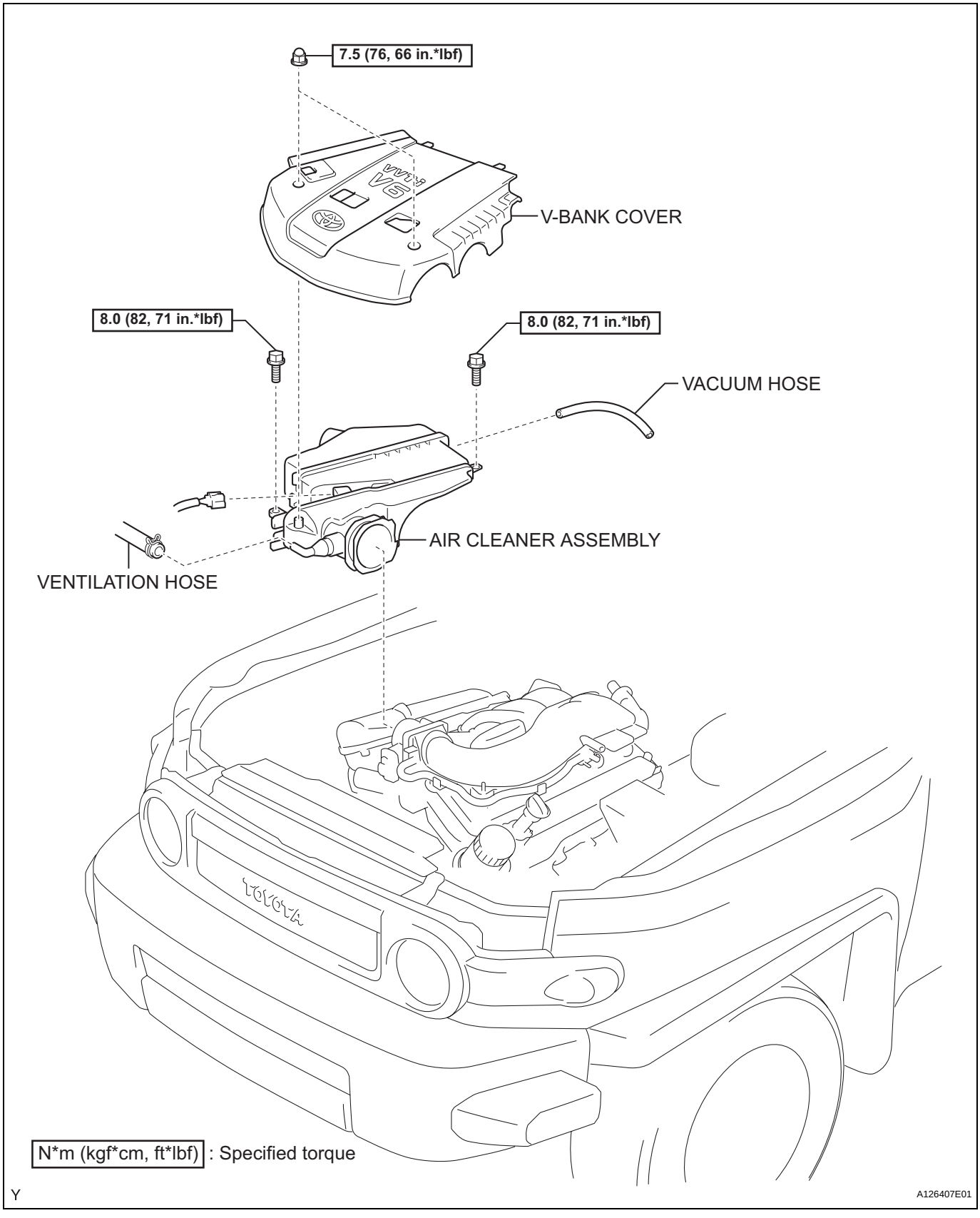

ES

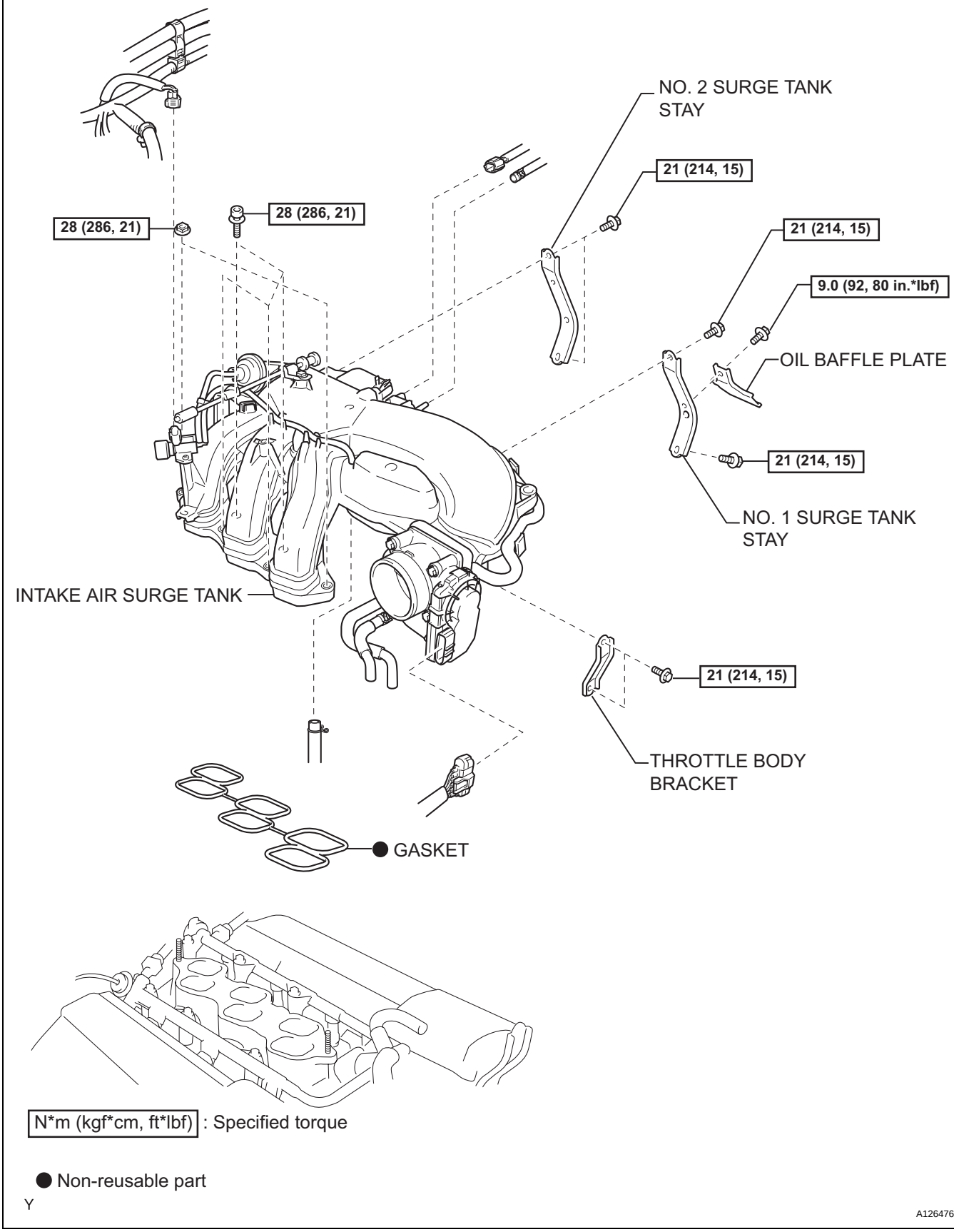
NO. 2 SURGE TANK STAY
21 (214, 15)
28 (286, 21)
28 (286, 21)
21 (214, 15)
9.0 (92, 80 in.*lbf)
OIL BAFFLE PLATE
21 (214, 15)
NO. 1 SURGE TANK STAY
INTAKE AIR SURGE TANK
21 (214, 15)
THROTTLE BODY BRACKET
● GASKET
N*m (kgf*cm, ft*lbf) : Specified torque
● Non-reusable part
A126476E01

Y

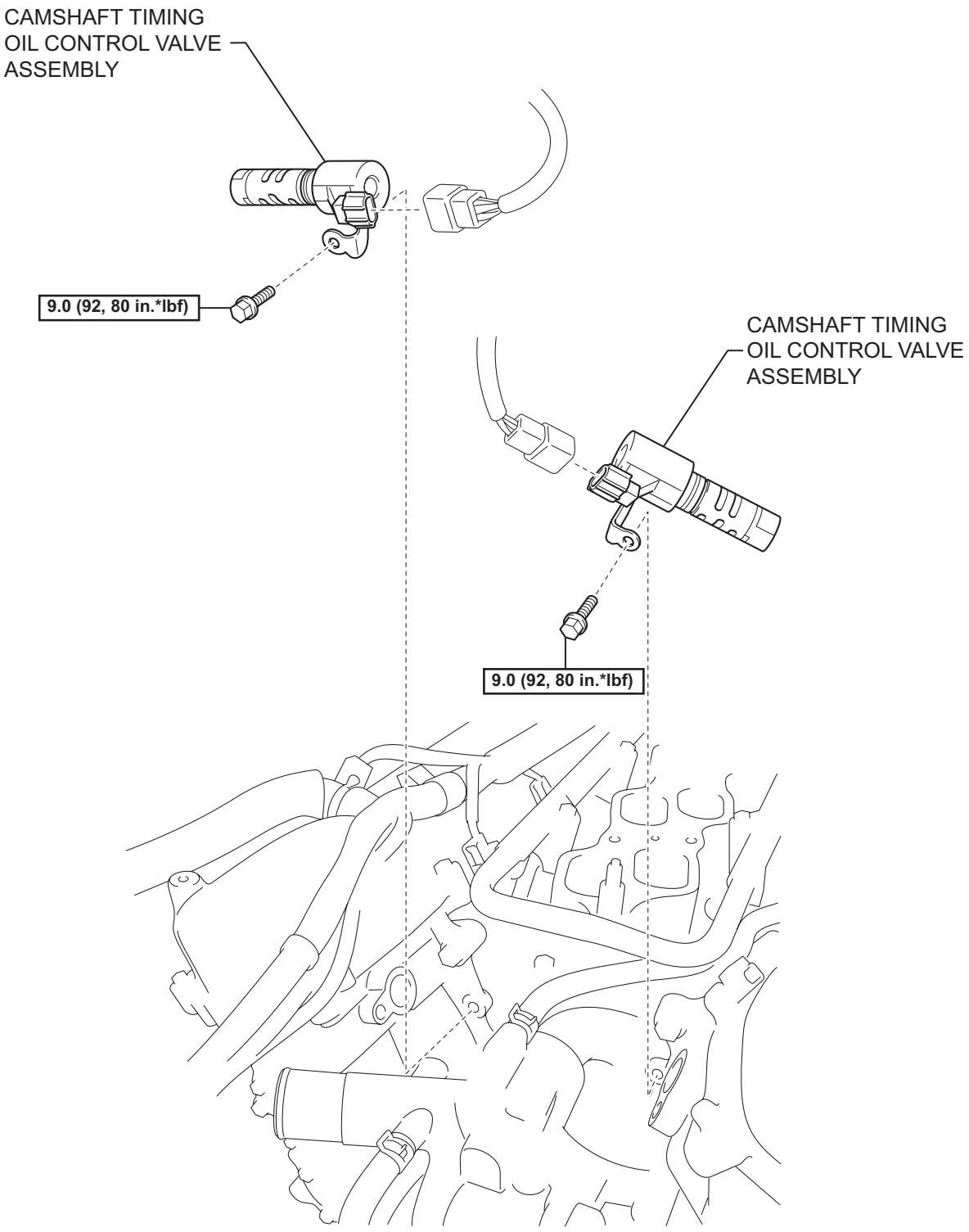

N*m (kgf*cm, ft*lbf) : Specified torque

Y

A126418E01

ES

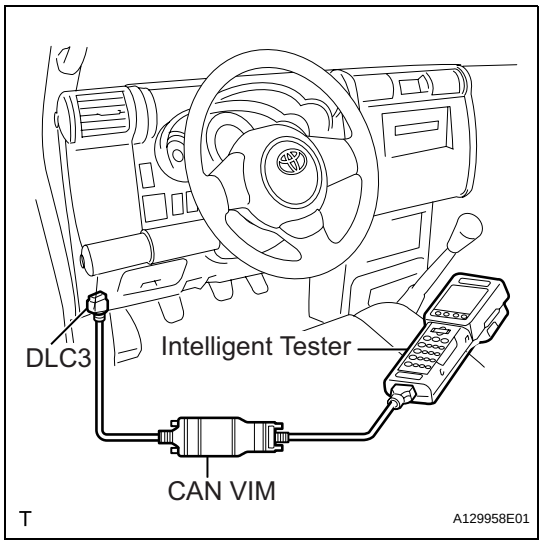

ON-VEHICLE INSPECTION

1. INSPECT CAMSHAFT TIMING OIL CONTROL VALVE ASSEMBLY

(a) Check the operation.

(1) Turn the ignition switch to ON.

(2) Turn the intelligent tester ON.

(3) Start the engine and warm it up.

(4) Select the following menu items: DIAGNOSIS / ENHANCED OBD II / ACTIVE TEST / PRIMARY / VVT CTRL B1.

(5) Operate the OCV using the intelligent tester, then check the engine speed.

Standard

Tester Operation	Specified Condition
OCV OFF	Normal engine speed
OCV ON	Rough idling or engine stalls

If the operation is not as specified, check the camshaft timing oil control valve, wire harness and ECM.

REMOVAL

1. **DISCONNECT CABLE FROM NEGATIVE BATTERY TERMINAL**
2. **DRAIN ENGINE COOLANT (See page CO-3)**
3. **REMOVE V-BANK COVER (See page ES-428)**
4. **REMOVE AIR CLEANER ASSEMBLY (See page ES-429)**
5. **REMOVE THROTTLE BODY BRACKET (See page FU-11)**
6. **REMOVE OIL BAFFLE PLATE (See page FU-11)**
7. **REMOVE NO. 1 SURGE TANK STAY (See page FU-11)**
8. **REMOVE NO. 2 SURGE TANK STAY (See page FU-12)**
9. **REMOVE INTAKE AIR SURGE TANK (See page FU-12)**
10. **REMOVE CAMSHAFT TIMING OIL CONTROL VALVE ASSEMBLY**
    (a) Disconnect the 2 connectors.
    (b) Remove the 2 bolts, then remove the 2 camshaft timing oil control valves.

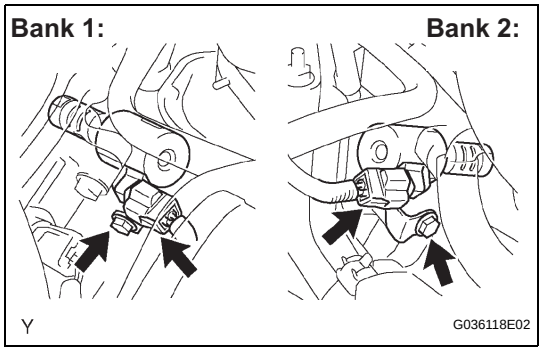

INSPECTION

1. **INSPECT CAMSHAFT TIMING OIL CONTROL VALVE ASSEMBLY**
   (a) Check the resistance.
      (1) Using an ohmmeter, measure the resistance between the terminals.
      Standard resistance

Tester Connection	Specified Condition
1 (+B) - 2 (GND)	6.9 to 7.9 Ω at 20°C (68°F)

If the result is not as specified, replace the camshaft timing oil control valve.

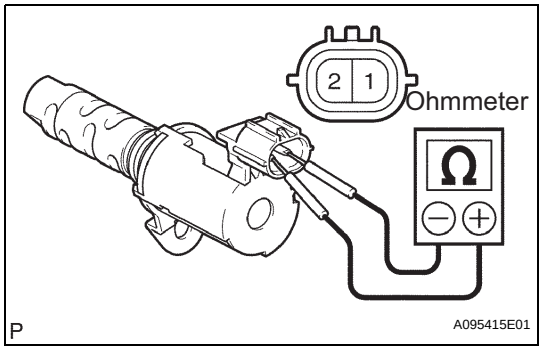

   (b) Check the operation.
      (1) Connect the positive (+) lead from the battery to terminal 1 and the negative (-) lead to terminal 2, and check that the valve operates.
      NOTICE:
      Check that the spool valve is not stuck.
      HINT:
      The spool valve may not return if foreign matter is caught in it. This may cause subtle pressure leakage to the advance side, and a DTC may be set.

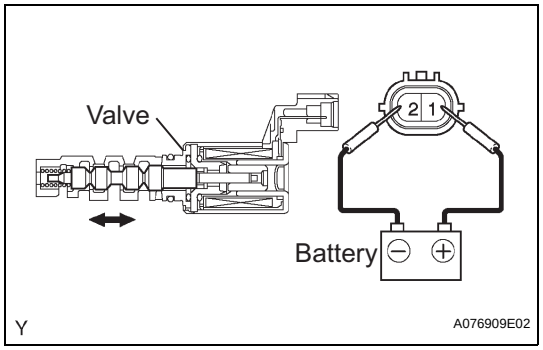

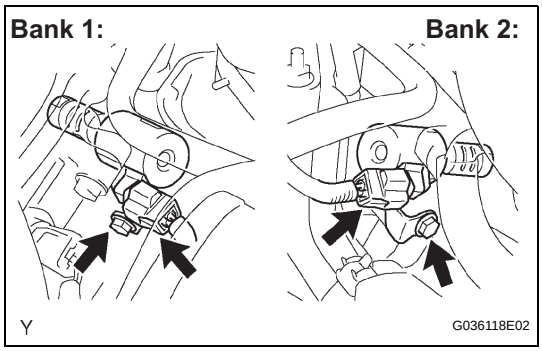

INSTALLATION

1. **INSTALL CAMSHAFT TIMING OIL CONTROL VALVE ASSEMBLY**
   (a) Install the 2 camshaft timing oil control valves with the 2 bolts.
   Torque: 9.0 N*m (92 kgf*cm, 80 in.*lbf)
   (b) Connect the 2 connectors.
2. **INSTALL INTAKE AIR SURGE TANK (See page FU-17)**
3. **INSTALL NO. 2 SURGE TANK STAY (See page FU-19)**
4. **INSTALL NO. 1 SURGE TANK STAY (See page FU-19)**
5. **INSTALL OIL BAFFLE PLATE (See page FU-19)**
6. **INSTALL THROTTLE BODY BRACKET (See page FU-19)**
7. **INSTALL AIR CLEANER ASSEMBLY (See page ES-431)**
8. **CONNECT CABLE TO NEGATIVE BATTERY TERMINAL**
   Torque: 3.9 N*m (40 kgf*cm, 35 in.*lbf)
9. **ADD ENGINE COOLANT (See page CO-3)**
10. **CHECK FOR ENGINE COOLANT LEAKAGE (See page CO-4)**
11. **INSTALL V-BANK COVER (See page ES-431)**

VVT SENSOR

COMPONENTS

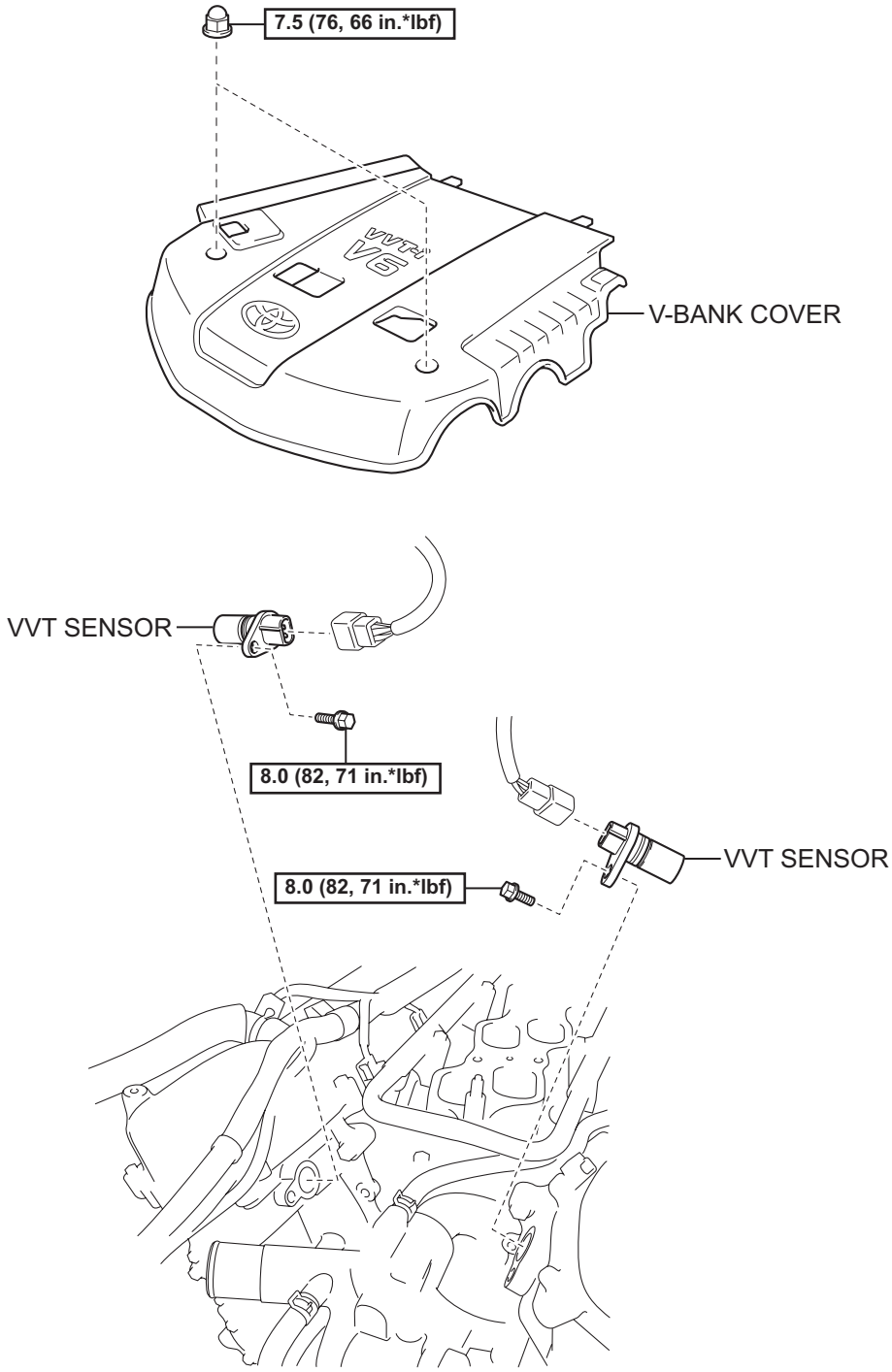

N*m (kgf*cm, ft*lbf) : Specified torque

Y

A126415E01

REMOVAL

1. **DISCONNECT CABLE FROM NEGATIVE BATTERY TERMINAL**
2. **DRAIN ENGINE COOLANT (See page CO-3)**
3. **REMOVE V-BANK COVER (See page ES-428)**
4. **REMOVE AIR CLEANER ASSEMBLY (See page ES-429)**
5. **REMOVE VVT SENSOR**
   (a) Bank 1 side VVT sensor:
      (1) Disconnect the VVT sensor connector.
      (2) Remove the bolt and VVT sensor.

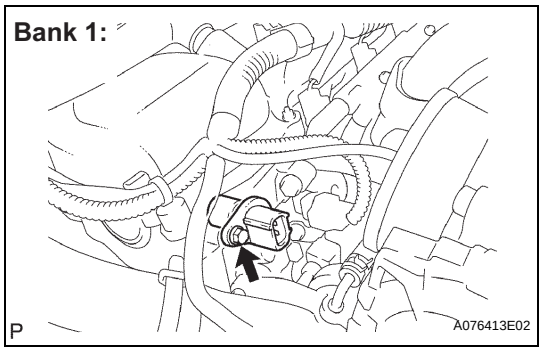

   (b) Bank 2 side VVT sensor:
      (1) Disconnect the No. 4 water by-pass hose and No. 5 water by-pass hose.
      (2) Disconnect the VVT sensor connector.

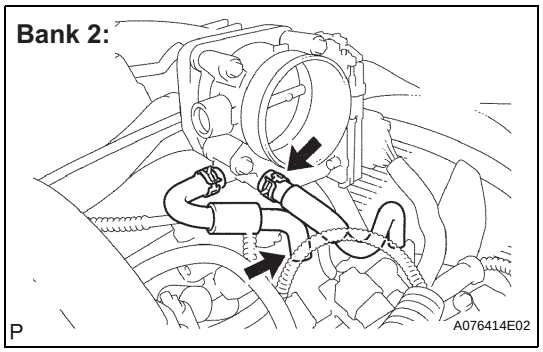

      (3) Remove the bolt and VVT sensor.

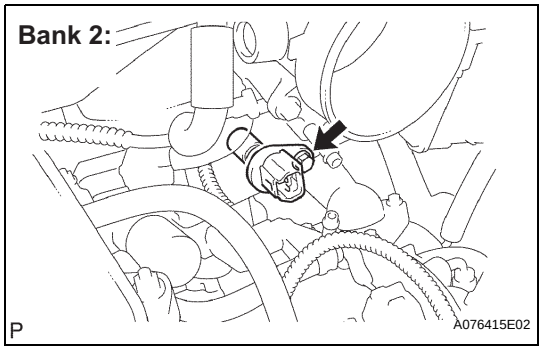

INSTALLATION

1. **INSTALL VVT SENSOR**
   (a) Bank 2 side VVT sensor:
      (1) Apply a light coat of engine oil to the O-ring of the VVT sensor.
      (2) Install the VVT sensor with the bolt.
      Torque: 8.0 N*m (82 kgf*cm, 71 in.*lbf)

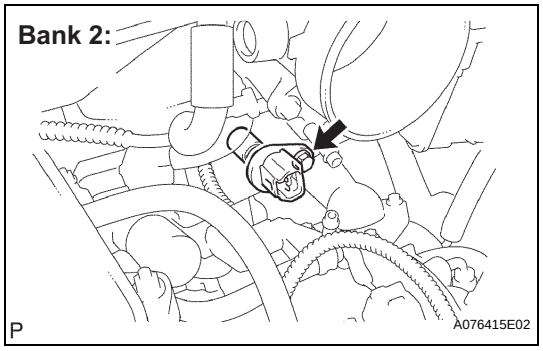

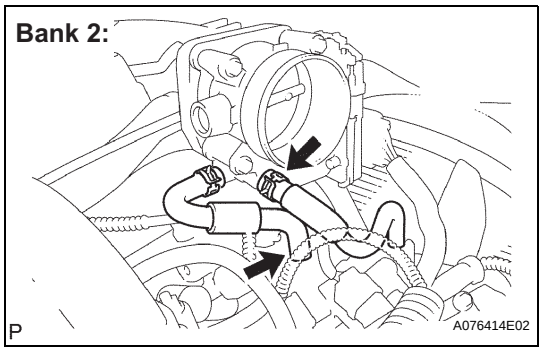

(3) Connect the VVT sensor connector.
(4) Connect the No. 4 water by-pass hose and No. 5 water by-pass hose.

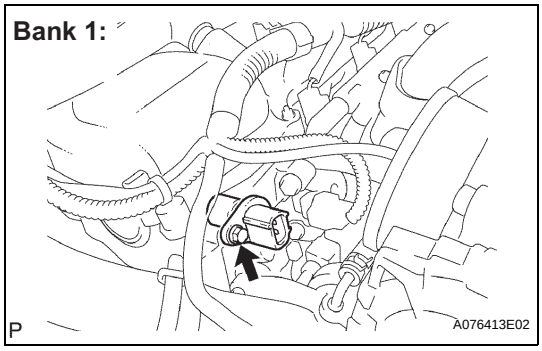

(b) Bank 1 side VVT sensor:
(1) Apply a light coat of engine oil to the O-ring of the VVT sensor.
(2) Install the VVT sensor with the bolt.
Torque: 8.0 N*m (82 kgf*cm, 71 in.*lbf)
(3) Connect the VVT sensor connector.

2. INSTALL AIR CLEANER ASSEMBLY (See page ES-431)

3. CONNECT CABLE TO NEGATIVE BATTERY TERMINAL
Torque: 3.9 N*m (40 kgf*cm, 35 in.*lbf)

4. ADD ENGINE COOLANT (See page CO-3)

5. CHECK FOR ENGINE COOLANT LEAKAGE (See page CO-4)

6. INSTALL V-BANK COVER (See page ES-431)

CRANKSHAFT POSITION SENSOR

COMPONENTS

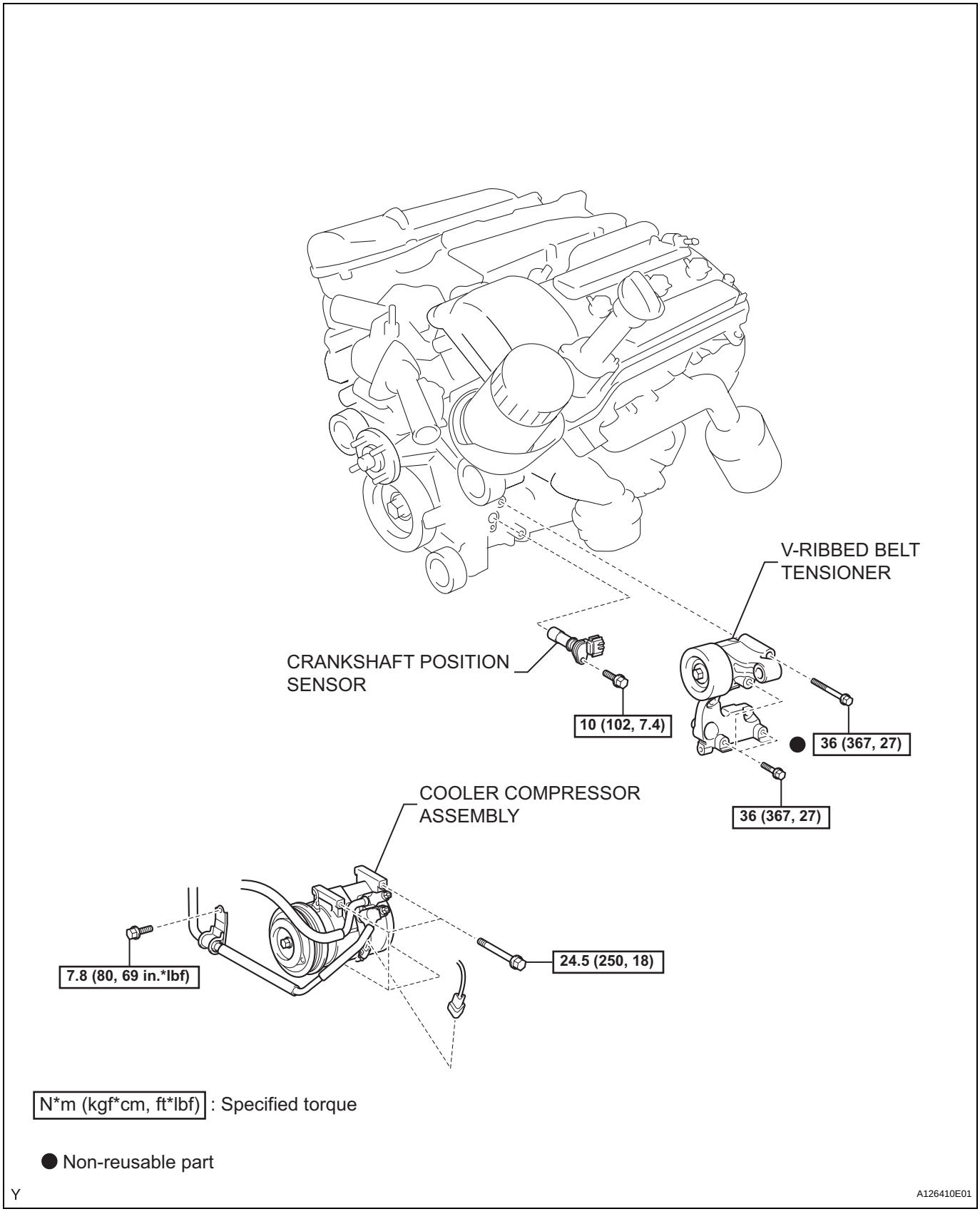

ES

ES

REMOVAL

1. **DISCONNECT CABLE FROM NEGATIVE BATTERY TERMINAL**
2. **REMOVE V-BANK COVER (See page ES-428)**
3. **REMOVE FAN**
   Refer to the procedures up to "REMOVE FAN "(See page CO-17).
4. **REMOVE GENERATOR ASSEMBLY**
   Refer to the procedures up to "REMOVE GENERATOR ASSEMBLY" (See page CH-9)
5. **SEPARATE COOLER COMPRESSOR ASSEMBLY**
   (a) Remove the bolt, then separate the suction hose sub-assembly.

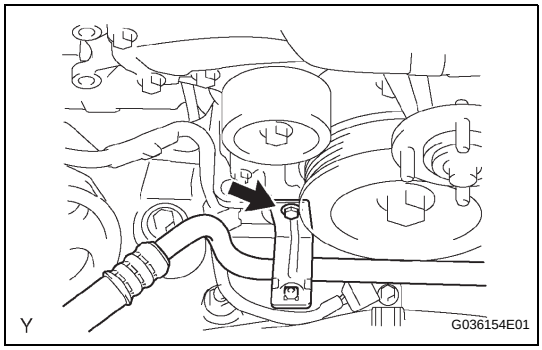

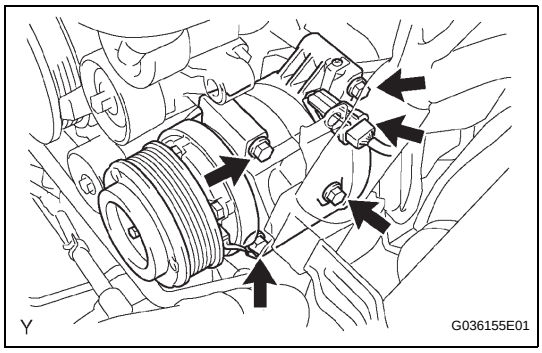

   (b) Disconnect the cooler compressor assembly connector.
   (c) Remove the 4 bolts, then separate the cooler compressor assembly from the V-ribbed belt tensioner assembly.
6. **REMOVE CRANKSHAFT POSITION SENSOR**
   (a) Disconnect the crankshaft position sensor connector.
   (b) Remove the bolt, then remove the crankshaft position sensor.

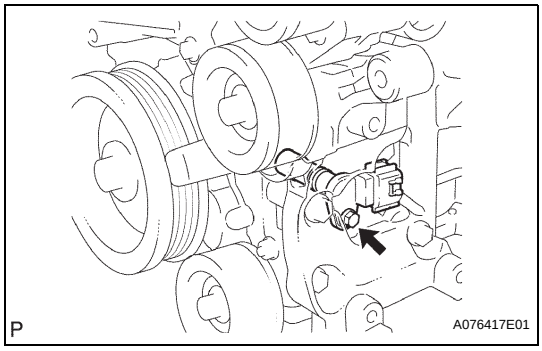

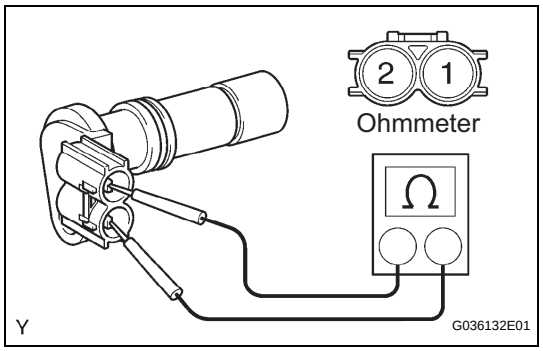

INSPECTION

1. INSPECT CRANKSHAFT POSITION SENSOR

(a) Check the resistance.

(1) Using an ohmmeter, measure the resistance between the terminals.

Standard resistance:

1,850 to 2,450 Ω at 20°C (68°F)

If the result is not as specified, replace the crankshaft position sensor.

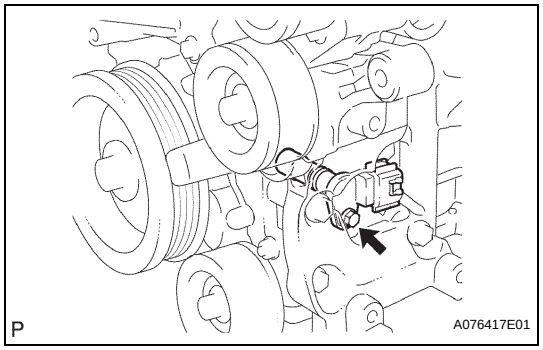

INSTALLATION

1. INSTALL CRANKSHAFT POSITION SENSOR

(a) Apply a light coat of engine oil to the O-ring of the crankshaft position sensor.

(b) Install the crankshaft position sensor with the bolt.

Torque: 10 N*m (102 kgf*cm, 7.4 ft.*lbf)

(c) Connect the crankshaft position sensor connector.

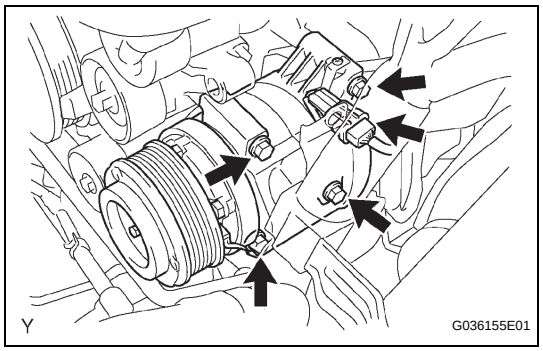

2. INSTALL COOLER COMPRESSOR ASSEMBLY

(a) Install the cooler compressor assembly with the 4 bolts.

Torque: 24.5 N*m (250 kgf*cm, 18 ft.*lbf)

(b) Connect the cooler compressor assembly connector.

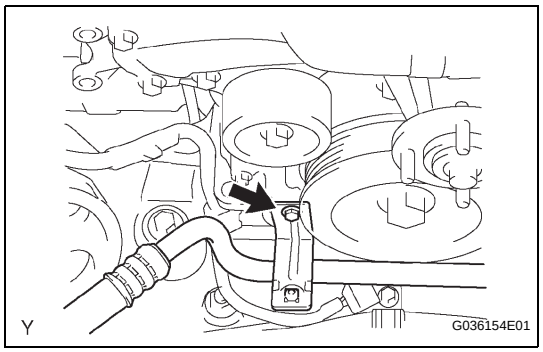

(c) Install the suction hose sub-assembly with the bolt.

Torque: 7.8 N*m (80 kgf*cm, 69 in.*lbf)

3. INSTALL GENERATOR ASSEMBLY

Refer to the procedures up to "INSTALL GENERATOR ASSEMBLY" (See page CH-17)

4. INSTALL FAN

Refer to the procedures up to "INSTALL FAN" (See page CO-17).

5. CONNECT CABLE TO NEGATIVE BATTERY TERMINAL

Torque: 3.9 N*m (40 kgf*cm, 35 in.*lbf)

6. INSTALL V-BANK COVER (See page ES-431)

ES

ENGINE COOLANT TEMPERATURE SENSOR

COMPONENTS

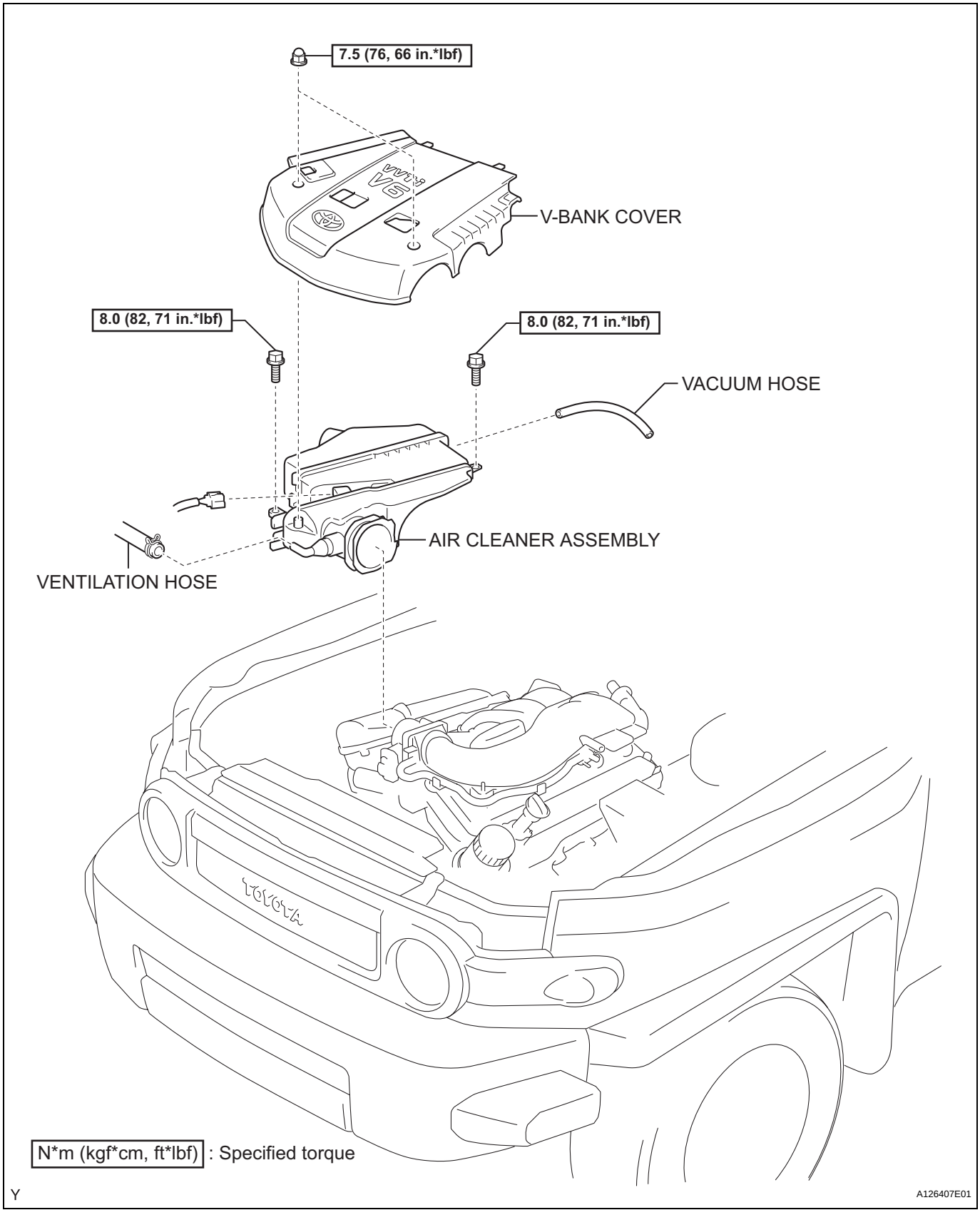

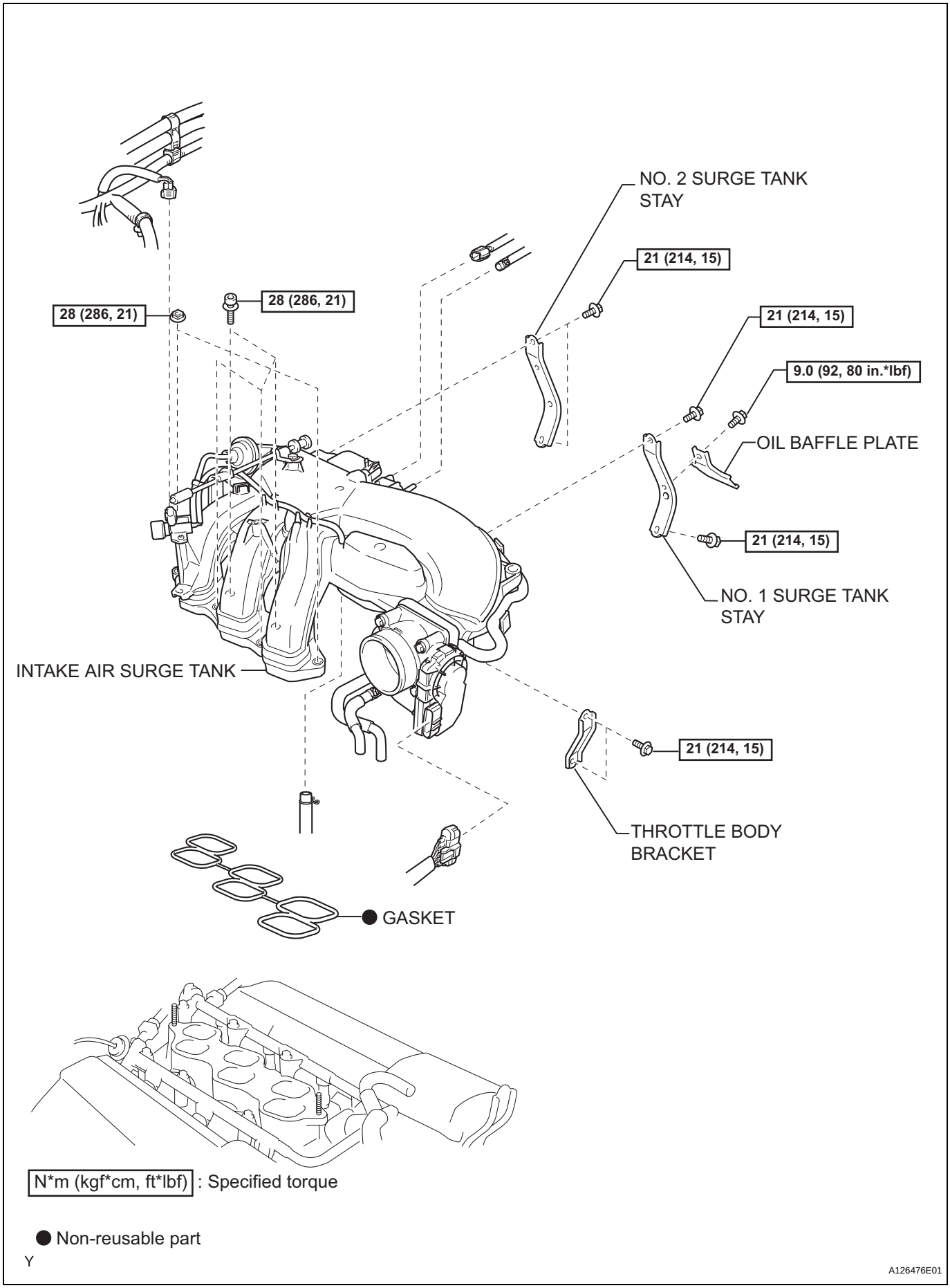
NO. 2 SURGE TANK STAY
21 (214, 15)
28 (286, 21)
28 (286, 21)
21 (214, 15)
9.0 (92, 80 in.*lbf)
OIL BAFFLE PLATE
21 (214, 15)
NO. 1 SURGE TANK STAY
INTAKE AIR SURGE TANK
21 (214, 15)
THROTTLE BODY BRACKET
● GASKET
N*m (kgf*cm, ft*lbf) : Specified torque
● Non-reusable part
A126476E01

ES

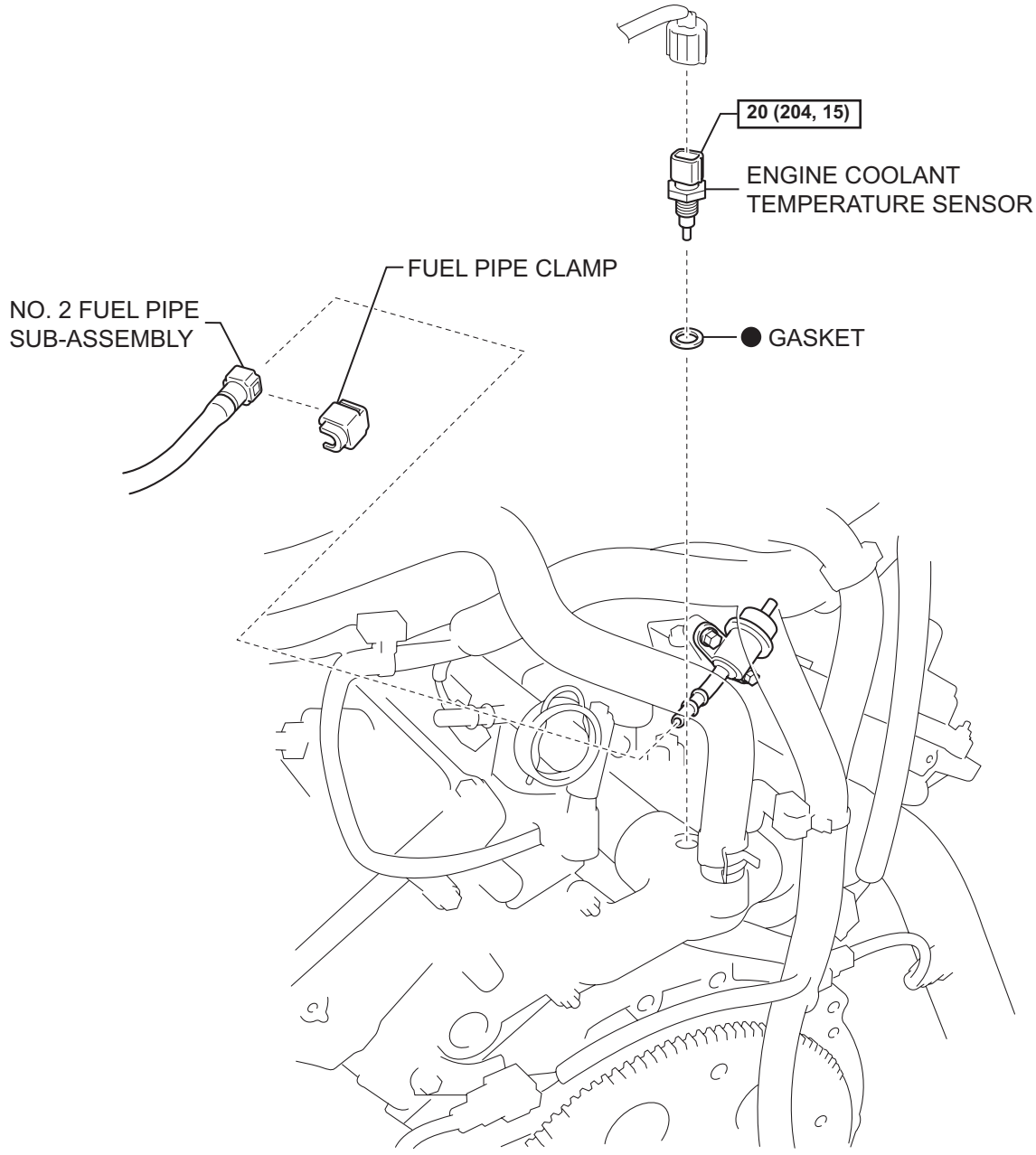

N*m (kgf*cm, ft*lbf) : Specified torque

● Non-reusable part

Y

A126417E01

REMOVAL

1. **DISCHARGE FUEL SYSTEM PRESSURE**
   (See page FU-1)
2. **DRAIN ENGINE COOLANT (See page CO-3)**
3. **DISCONNECT CABLE FROM NEGATIVE BATTERY TERMINAL**
4. **REMOVE V-BANK COVER (See page ES-428)**
5. **REMOVE AIR CLEANER ASSEMBLY (See page ES-429)**
6. **REMOVE THROTTLE BODY BRACKET (See page FU-11)**
7. **REMOVE OIL BAFFLE PLATE (See page FU-11)**
8. **REMOVE NO. 1 SURGE TANK STAY (See page FU-11)**
9. **REMOVE NO. 2 SURGE TANK STAY (See page FU-12)**
10. **REMOVE INTAKE AIR SURGE TANK (See page FU-12)**
11. **DISCONNECT NO. 2 FUEL PIPE SUB-ASSEMBLY (See page FU-14)**
12. **REMOVE ENGINE COOLANT TEMPERATURE SENSOR**
    (a) Disconnect the connector.
    (b) Using a 19 mm deep socket wrench, remove the water temperature sensor and gasket.

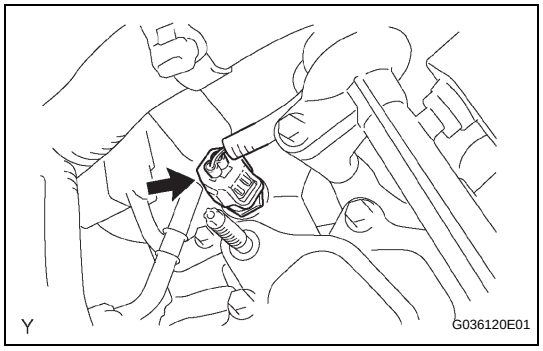

ES

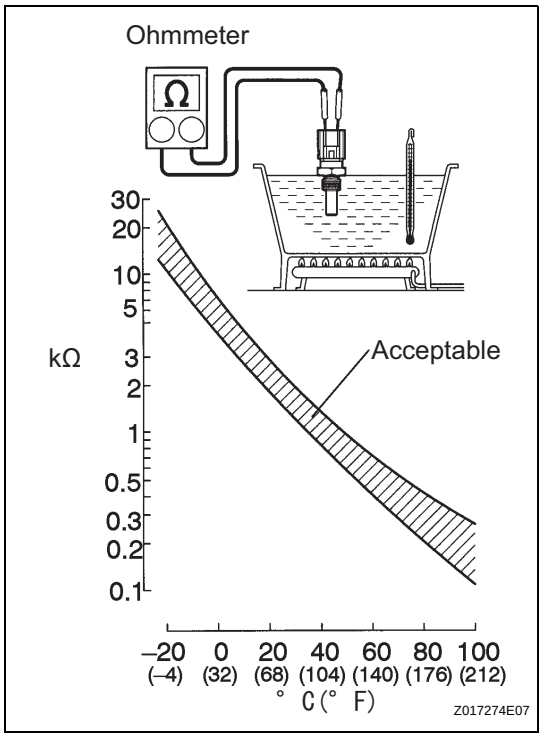

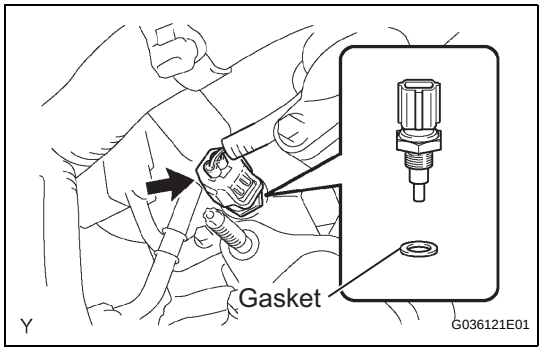

INSPECTION

1. **INSPECT ENGINE COOLANT TEMPERATURE SENSOR**
   (a) Check the resistance.
   (1) Using an ohmmeter, measure the resistance between the terminals.
   Standard resistance

Tester Connection	Specified Condition
1 (E2) - 2 (THW)	2.32 to 2.59 kΩ at 20°C (68°F)
1 (E2) - 2 (THW)	0.310 to 0.326 kΩ at 80°C (176°F)

NOTICE:
If checking the engine coolant temperature sensor in water, be careful not to allow water to enter the terminals. After checking, wipe the water off the engine coolant temperature sensor.
If the result is not as specified, replace the engine coolant temperature sensor.

INSTALLATION

1. **INSTALL ENGINE COOLANT TEMPERATURE SENSOR**
   (a) Using a 19 mm deep socket wrench, install the water temperature sensor with a new gasket.
   Torque: 20 N*m (204 kgf*cm, 15 ft.*lbf)
   (b) Connect the connector.
2. **CONNECT NO. 2 FUEL PIPE SUB-ASSEMBLY (See page FU-17)**
3. **INSTALL INTAKE AIR SURGE TANK (See page FU-17)**
4. **INSTALL NO. 2 SURGE TANK STAY (See page FU-19)**
5. **INSTALL NO. 1 SURGE TANK STAY (See page FU-19)**
6. **INSTALL OIL BAFFLE PLATE (See page FU-19)**
7. **INSTALL THROTTLE BODY BRACKET (See page FU-19)**
8. **INSTALL AIR CLEANER ASSEMBLY (See page ES-431)**
9. **CONNECT CABLE TO NEGATIVE BATTERY TERMINAL**
   Torque: 3.9 N*m (40 kgf*cm, 35 in.*lbf)
10. **ADD ENGINE COOLANT (See page CO-3)**
11. **CHECK FOR ENGINE COOLANT LEAKAGE (See page CO-4)**
12. **CHECK FOR FUEL LEAKAGE**
13. **INSTALL V-BANK COVER (See page ES-431)**

THROTTLE BODY

COMPONENTS

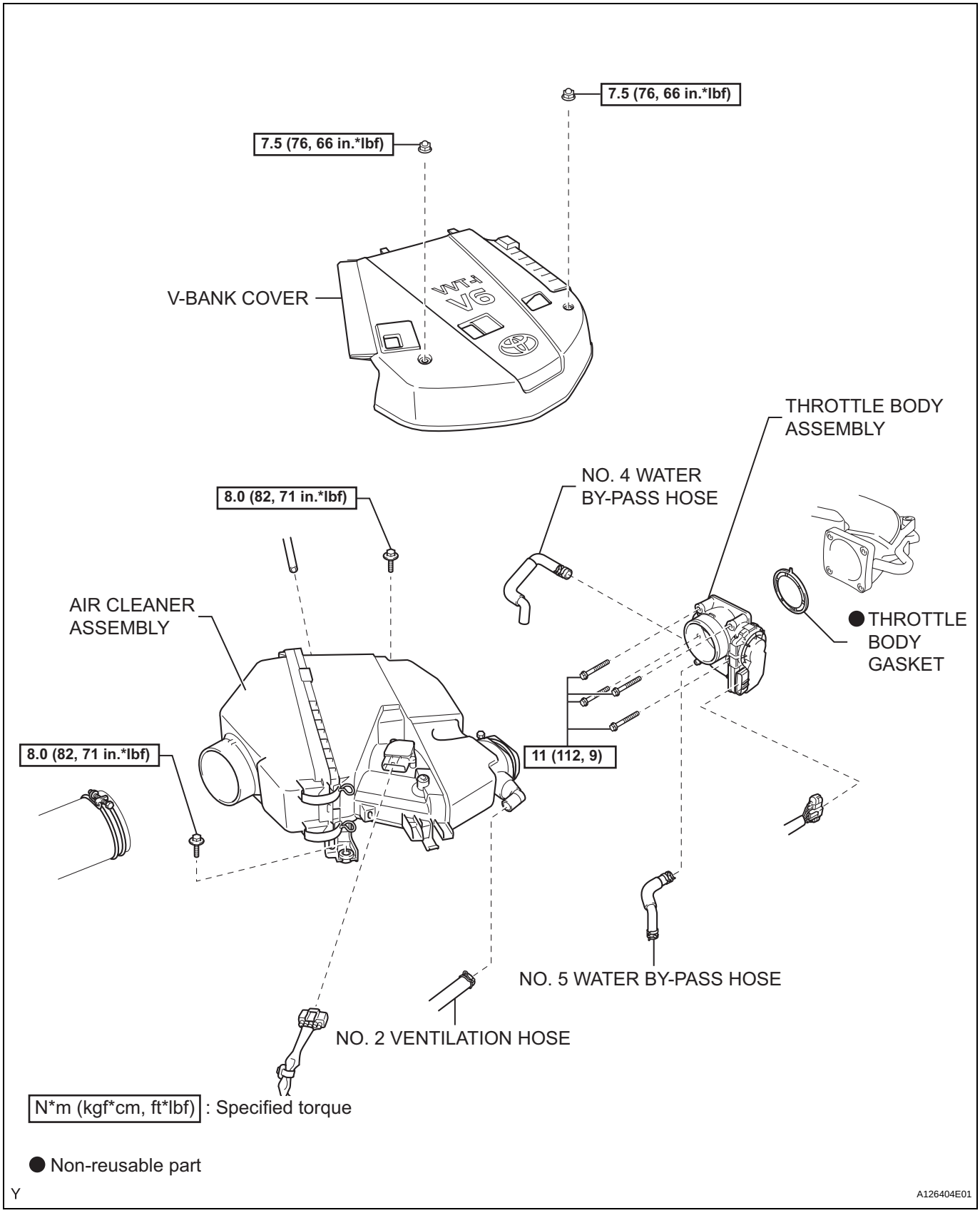

ON-VEHICLE INSPECTION

1. INSPECT THROTTLE BODY ASSEMBLY

(a) Listen to the throttle control motor operating sounds.
  (1) Turn the ignition switch to ON.
  (2) When pressing the accelerator pedal, listen to the running sound of the motor. Make sure no friction noises come from the motor.
  If friction noises occur, check the throttle body, wire harness and ECM.

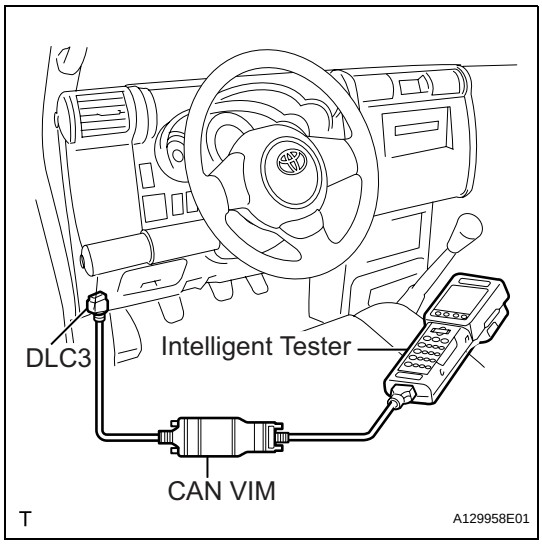

(b) Check the throttle position sensor.
  (1) Turn the ignition switch to ON.
  (2) Turn the intelligent tester ON.
  (3) Start the engine and warm it up.
  (4) Select the following menu items: DIAGNOSIS / ENHANCED OBD II / DATA LIST / PRIMARY / THROTTLE POS .
  (5) Depress the accelerator pedal. When the throttle valve is fully open, check that the THROTTLE POS value is within the specification.
  Standard:
  60% or more
  NOTICE:
  When checking the standard throttle valve opening percentage, the transmission should be in the neutral position.
  If the result is not as specified, check the throttle body, wire harness and ECM.

REMOVAL

1. **DISCONNECT CABLE FROM NEGATIVE BATTERY TERMINAL**
2. **DRAIN ENGINE COOLANT (See page CO-3)**
3. **REMOVE V-BANK COVER**
   (a) Remove the 2 nuts, then remove the V-bank cover.

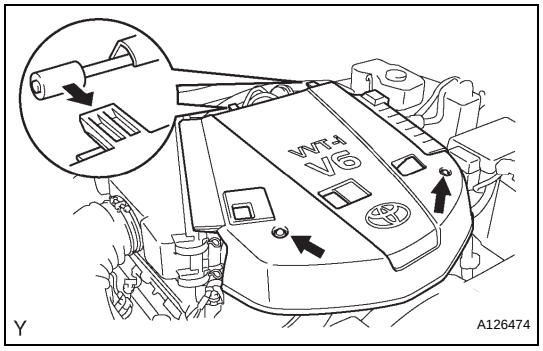

4. **REMOVE AIR CLEANER ASSEMBLY**
   (a) Disconnect the No. 2 ventilation hose.

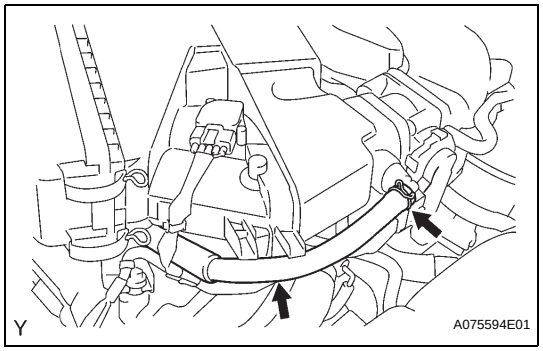

   (b) Disconnect the vacuum hose.
   (c) Disconnect the mass air flow meter connector.
   (d) Disengage the 2 wire harness clamps.

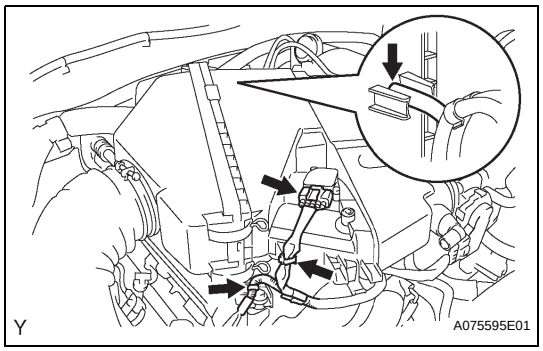

   (e) Loosen the 2 hose clamps.
   (f) Remove the 2 bolts.
   (g) Disconnect the air cleaner hose and remove the air cleaner.

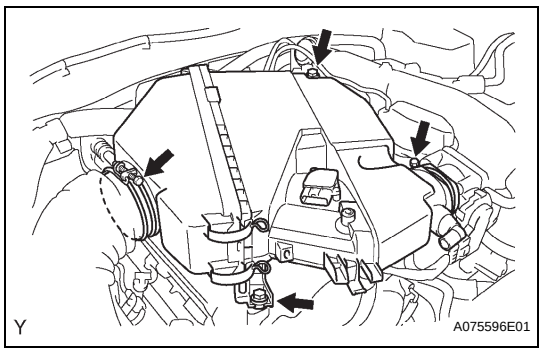

ES

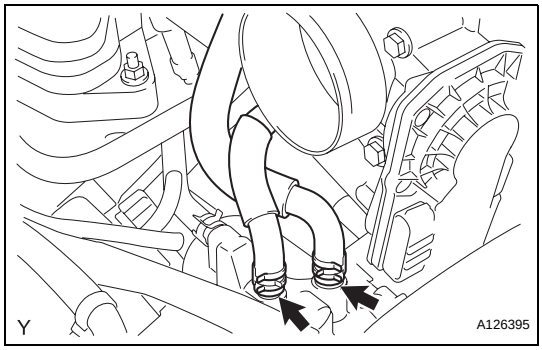

5. REMOVE THROTTLE WITH MOTOR BODY ASSEMBLY

(a) Disconnect the No. 5 water by-pass hose.
(b) Disconnect the No. 4 water by-pass hose.

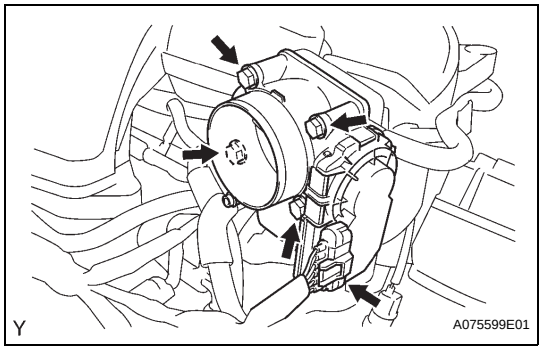

(c) Disconnect the throttle motor connector.
(d) Remove the 4 bolts, then remove the throttle w/ motor body and gasket.

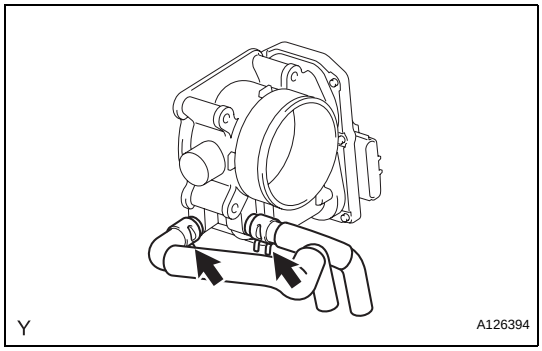

(e) Remove the No. 5 water by-pass hose.
(f) Remove the No. 4 water by-passe hose.

INSPECTION

1. INSPECT THROTTLE WITH MOTOR BODY ASSEMBLY

(a) Check the resistance.
(1) Using an ohmmeter, measure the resistance between the terminals.
Standard resistance

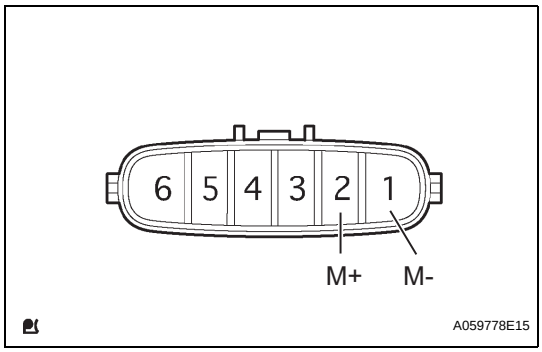

Tester Connection	Specified Condition
1 (M-) - 2 (M+)	0.3 to 100 Ω at 20°C (68°F)

If the result is not as specified, replace the throttle with motor body assembly.

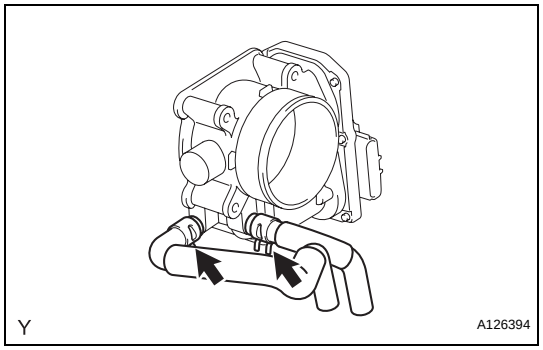

INSTALLATION

1. INSTALL THROTTLE WITH MOTOR BODY ASSEMBLY

(a) Connect the No. 4 water by-pass hose to the throttle body.

(b) Connect the No. 5 water by-passe hose to the throttle body.

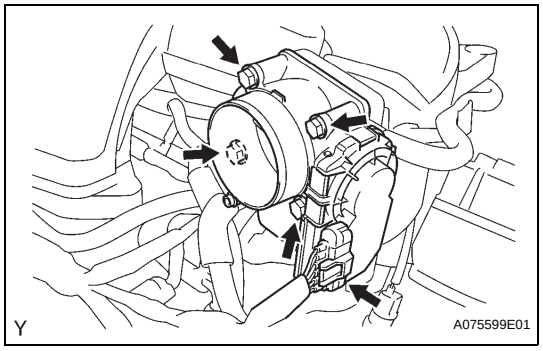

(c) Install a new gasket and the throttle with motor body with the 4 bolts.
Torque: 11 N*m (112 kgf*cm, 9 ft.*lbf)

(d) Connect the throttle motor connector.

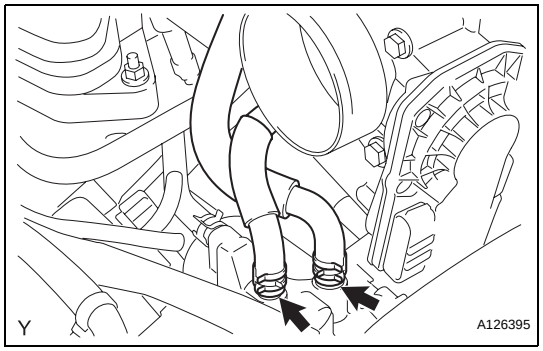

(e) Connect the No. 4 water by-pass hose.

(f) Connect the No. 5 water by-pass hose.

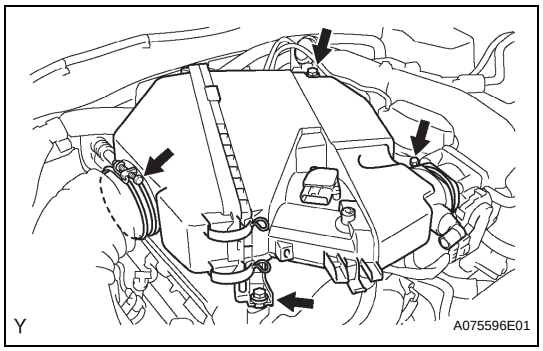

2. INSTALL AIR CLEANER ASSEMBLY

(a) Install the air cleaner onto the throttle body.

(b) Connect the air cleaner hose to the air cleaner.

(c) Install the air cleaner with the 2 bolts.
Torque: 8.0 N*m (82 kgf*cm, 71 in.*lbf)

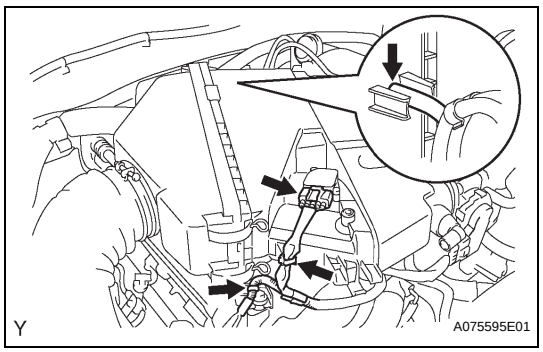

(d) Connect the mass air flow meter connector.

(e) Engage the 2 wire harness clamps.

(f) Connect the vacuum hose.

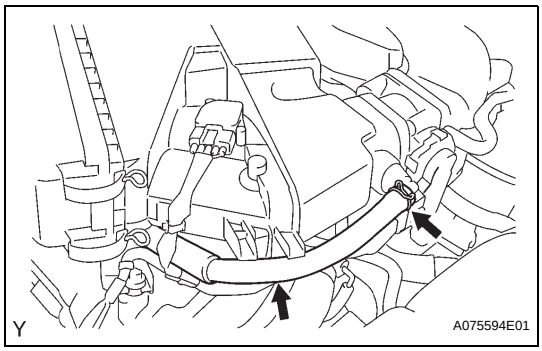

(g) Connect the No. 2 ventilation hose.

3. **CONNECT CABLE TO NEGATIVE BATTERY TERMINAL**
Torque: 3.9 N*m (40 kgf*cm, 35 in.*lbf)

4. **ADD ENGINE COOLANT (See page CO-3)**

5. **CHECK FOR ENGINE COOLANT LEAKAGE (See page CO-4)**

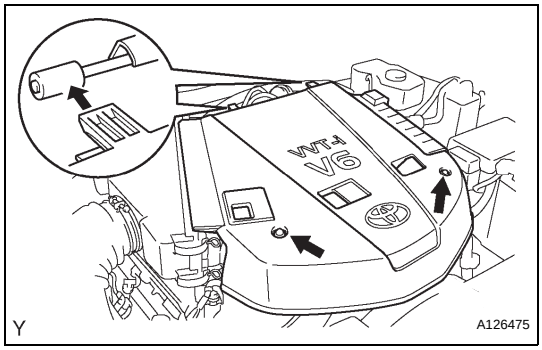

6. **INSTALL V-BANK COVER**
(a) Install the V-bank cover with the 2 nuts.
Torque: 7.5 N*m (76 kgf*cm, 66 in.*lbf)

ES

KNOCK SENSOR

COMPONENTS

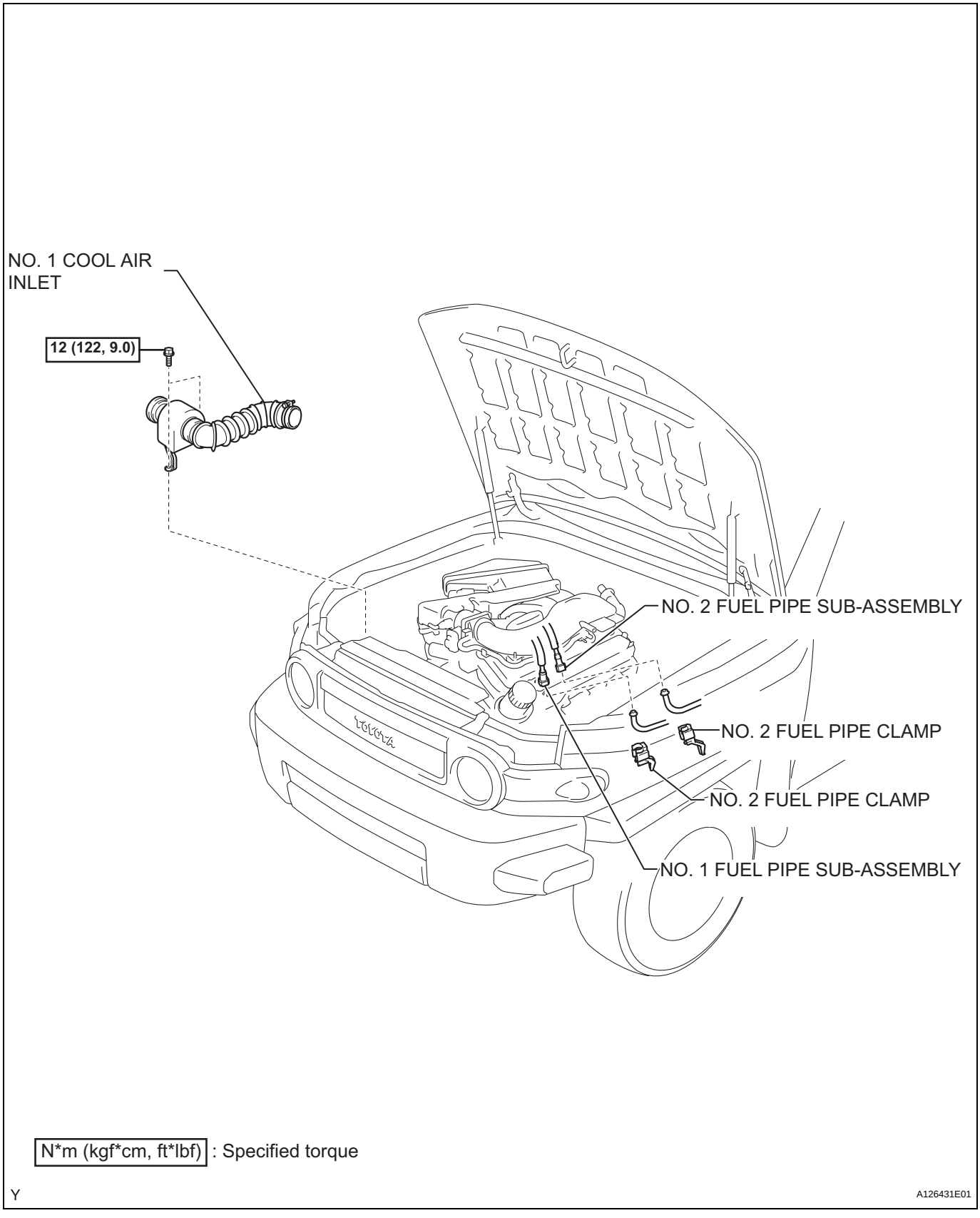

N*m (kgf*cm, ft*lbf) : Specified torque

Y

A126431E01

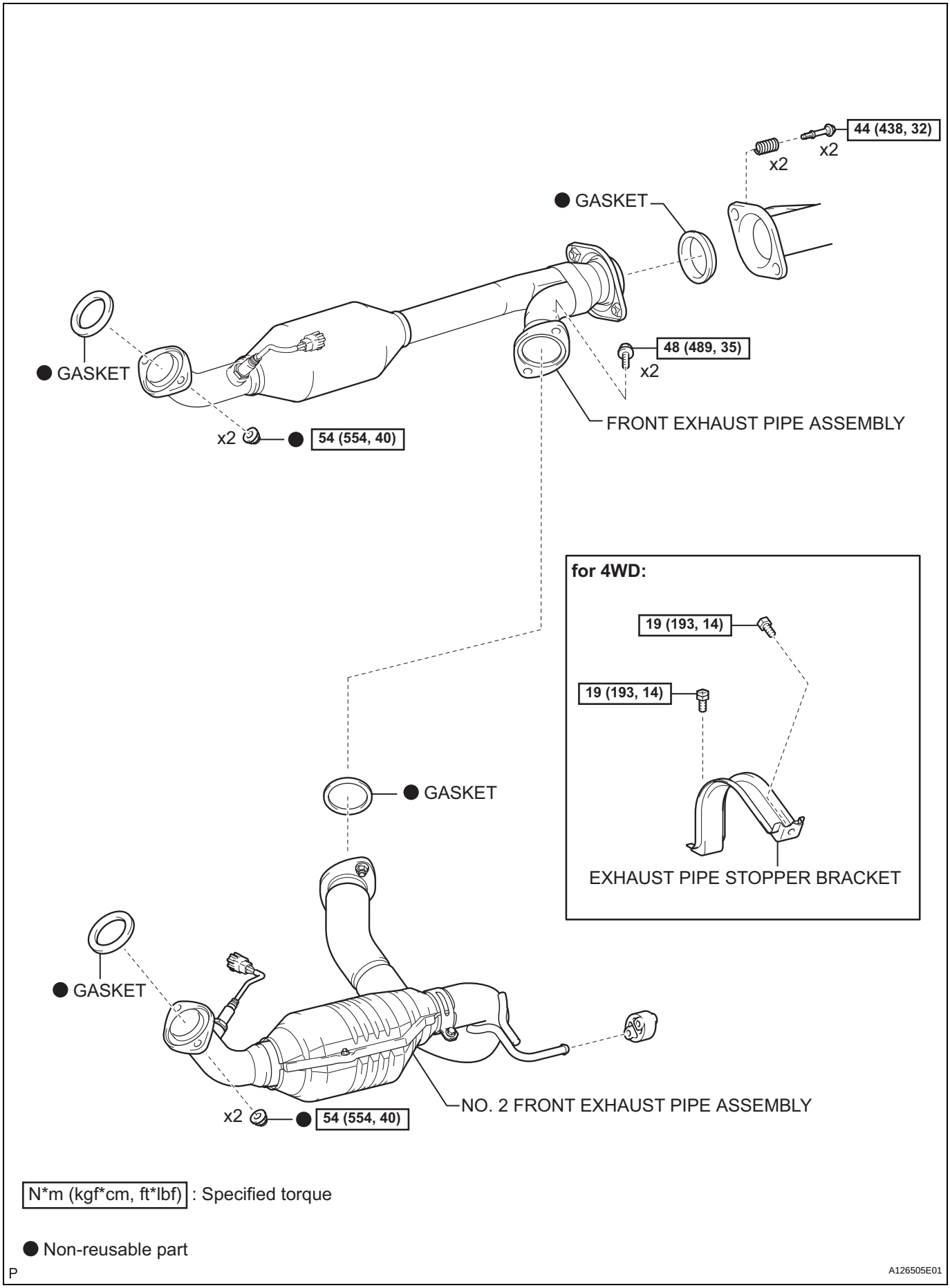
44 (438, 32)
x2
x2
GASKET
48 (489, 35)
x2
GASKET
FRONT EXHAUST PIPE ASSEMBLY
x2
54 (554, 40)
for 4WD:
19 (193, 14)
19 (193, 14)
EXHAUST PIPE STOPPER BRACKET
GASKET
GASKET
NO. 2 FRONT EXHAUST PIPE ASSEMBLY
x2
54 (554, 40)
N*m (kgf*cm, ft*lbf) : Specified torque
Non-reusable part
A126505E01

ES

P

ES

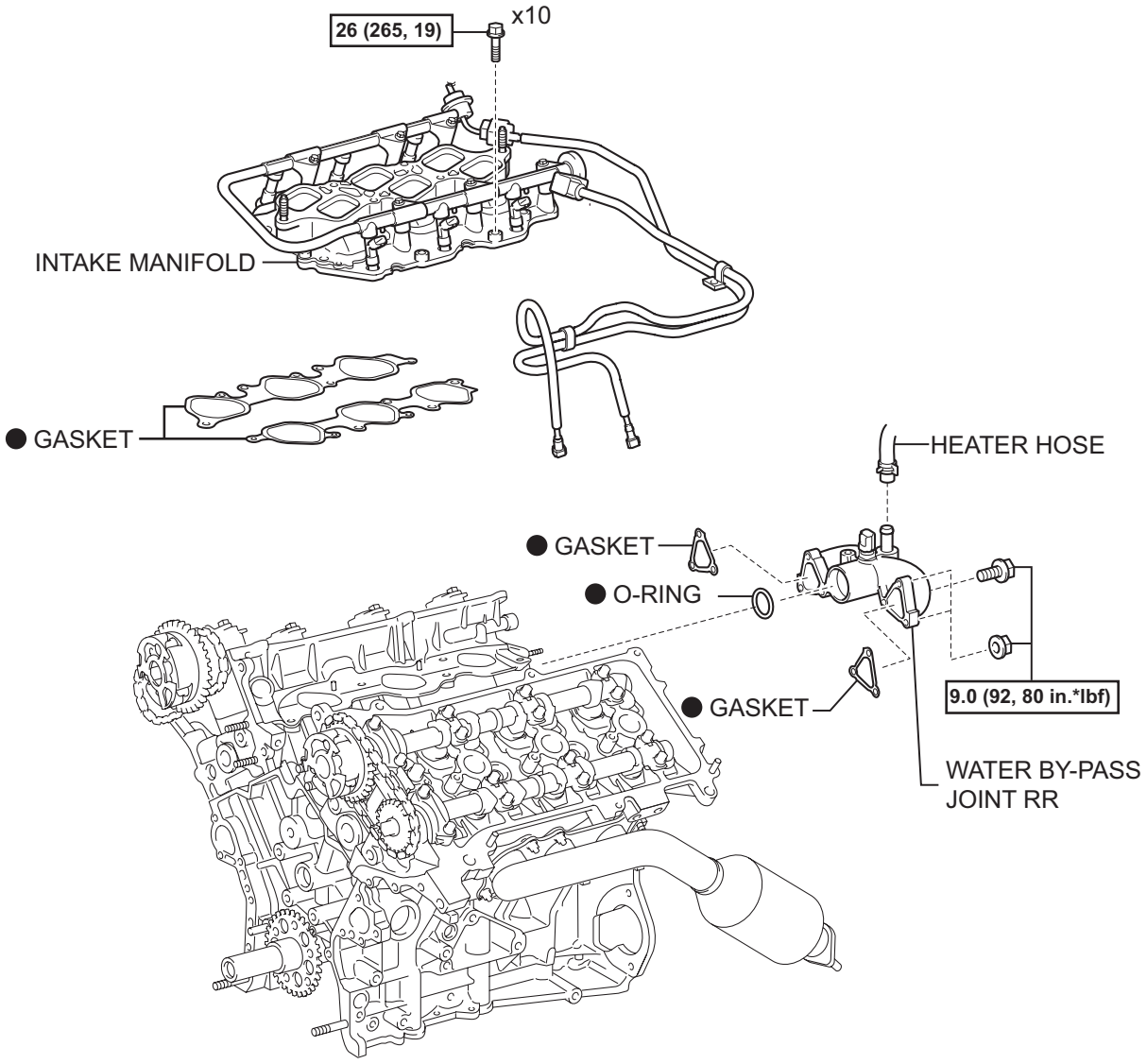

N*m (kgf*cm, ft*lbf) : Specified torque

● Non-reusable part

Y

A126432E01

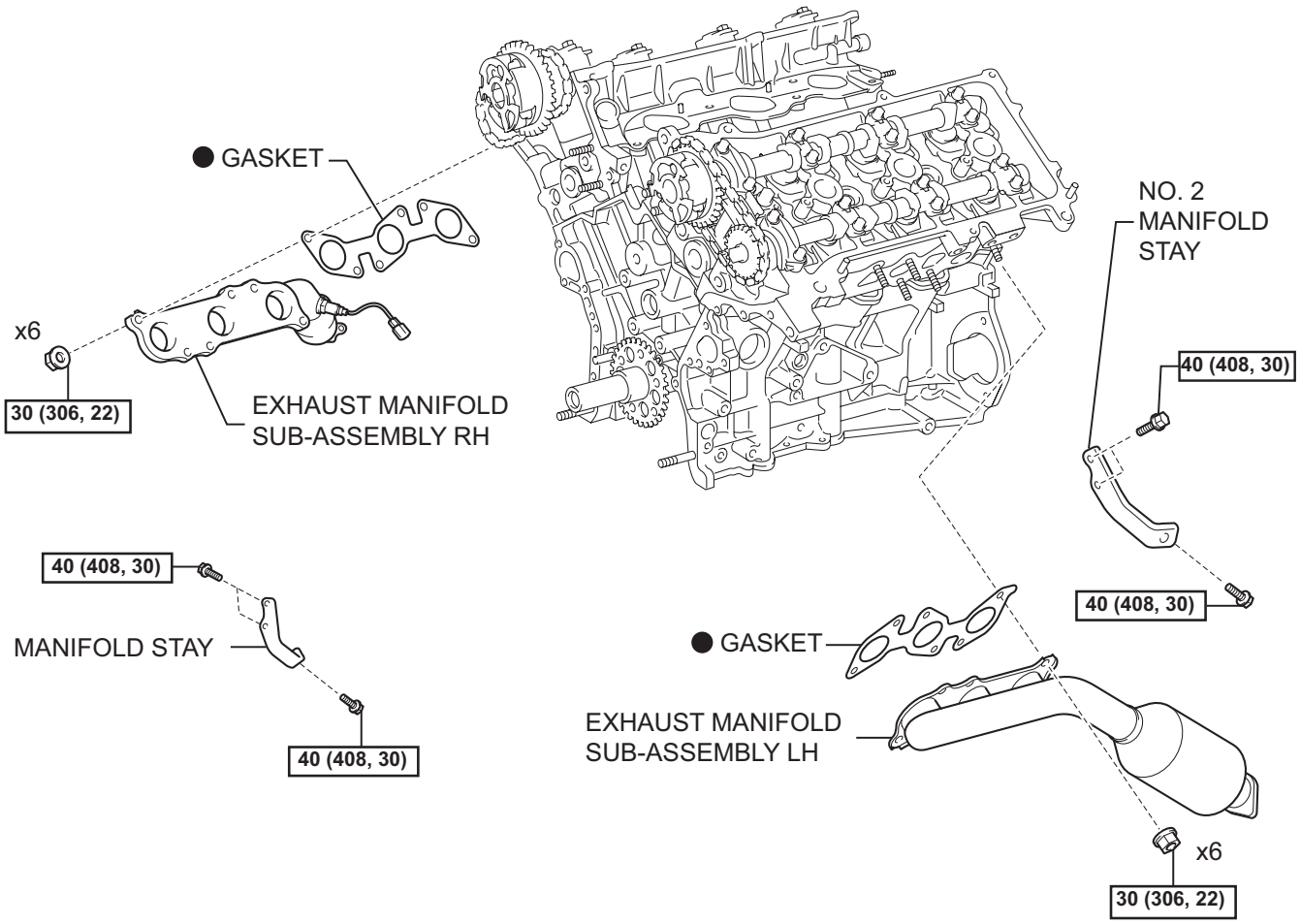

N*m (kgf*cm, ft*lbf) : Specified torque

● Non-reusable part

Y

A126433E01

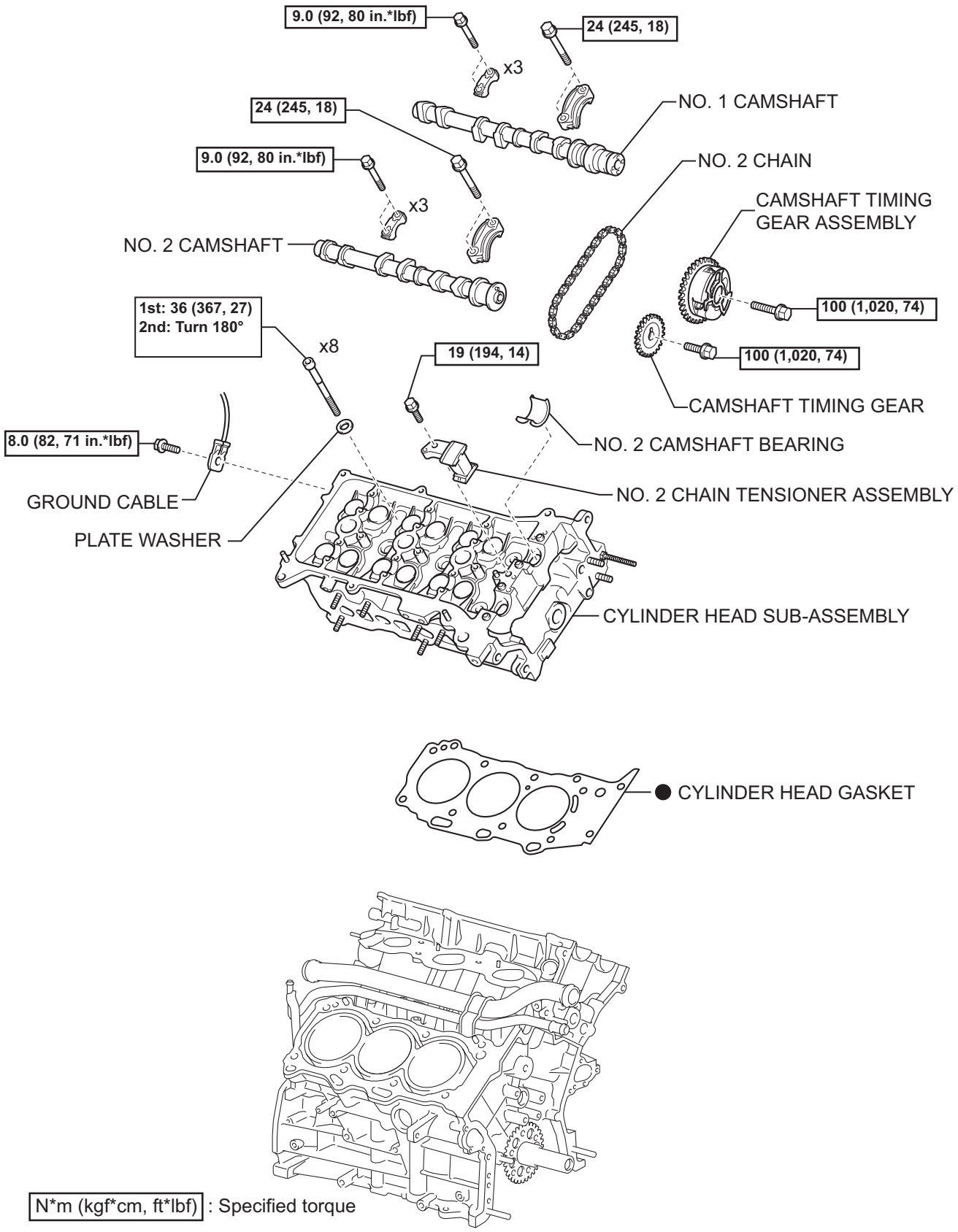

Y

A126434E01

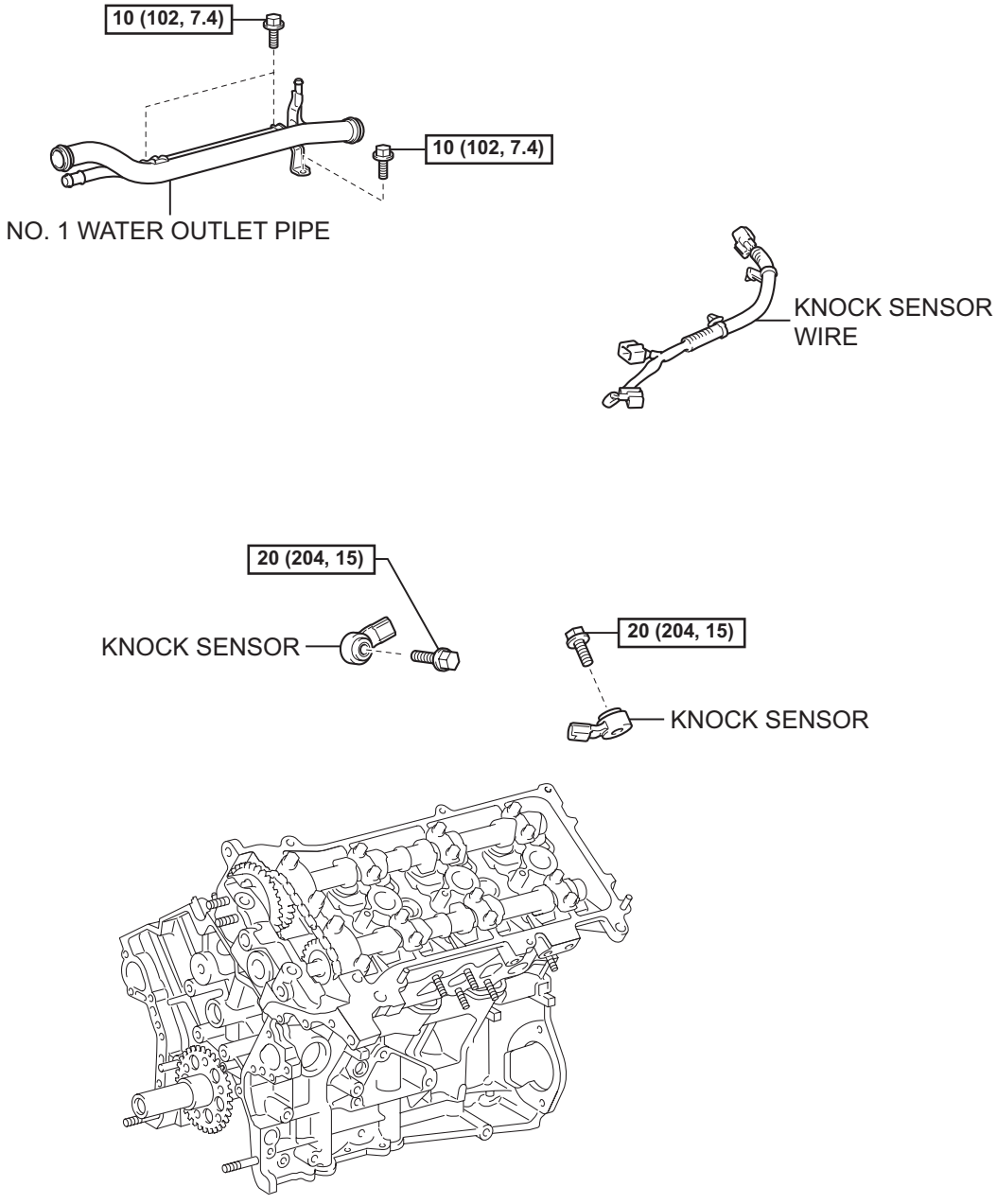

N*m (kgf*cm, ft*lbf) : Specified torque

Y

A126457E01

ES

REMOVAL

1. **DISCHARGE FUEL SYSTEM PRESSURE**
   (See page FU-1)
2. **REMOVE CHAIN SUB-ASSEMBLY**
   Refer to the procedures up to "REMOVE CHAIN SUB-ASSEMBLY" (See page EM-22).
3. **REMOVE NO. 1 COOL AIR INLET (See page EM-67)**
4. **REMOVE EXHAUST PIPE STOPPER BRACKET (for 4WD)**
5. **REMOVE NO. 2 FRONT EXHAUST PIPE ASSEMBLY (See page EM-67)**
6. **REMOVE FRONT EXHAUST PIPE ASSEMBLY (See page EM-68)**
7. **REMOVE MANIFOLD STAY (See page EM-68)**
8. **REMOVE EXHAUST MANIFOLD SUB-ASSEMBLY RH (See page EM-68)**
9. **DISCONNECT NO. 1 FUEL PIPE SUB-ASSEMBLY (See page FU-13)**
10. **DISCONNECT NO. 2 FUEL PIPE SUB-ASSEMBLY (See page FU-14)**
11. **REMOVE INTAKE MANIFOLD (See page EM-69)**
12. **REMOVE WATER BY-PASS JOINT RR (See page EM-69)**
13. **REMOVE CAMSHAFT TIMING GEARS AND NO. 2 CHAIN (for Bank 1) (See page EM-69)**
14. **REMOVE NO. 2 CHAIN TENSIONER ASSEMBLY (See page EM-70)**
15. **REMOVE CAMSHAFTS (for Bank 1) (See page EM-70)**
16. **REMOVE NO. 2 CAMSHAFT BEARING**
17. **REMOVE CYLINDER HEAD SUB-ASSEMBLY (See page EM-70)**
18. **REMOVE CYLINDER HEAD GASKET**
19. **DISCONNECT HEATER WATER INLET HOSE**
    (a) Disconnect the heater water inlet hose from the water outlet pipe.

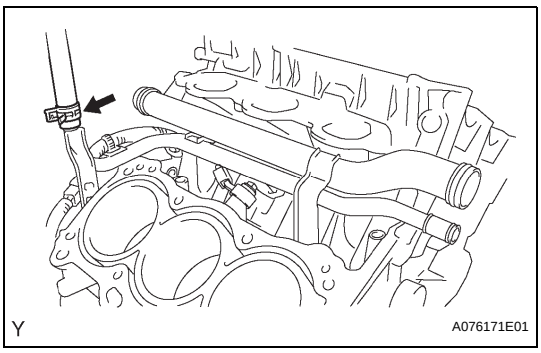

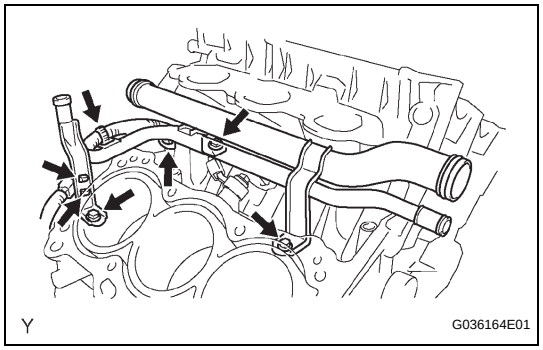

20. REMOVE NO. 1 WATER OUTLET PIPE

(a) Remove the 4 wire harness clamps.

(b) Remove the 3 bolts and water outlet pipe.

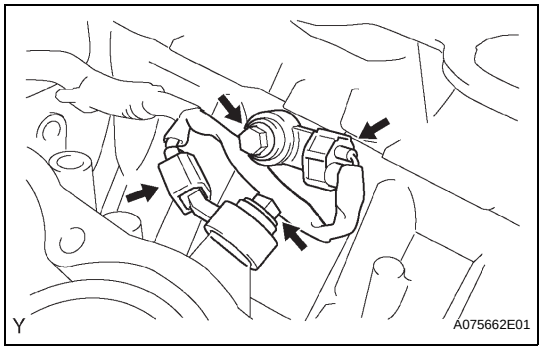

21. REMOVE KNOCK SENSOR

(a) Disconnect the 2 knock sensor connectors.

(b) Remove the 2 bolts and 2 knock sensors.

ES

INSPECTION

1. INSPECT KNOCK SENSOR

(a) Check the resistance.

(1) Using an ohmmeter, measure the resistance between the terminals.

Standard resistance

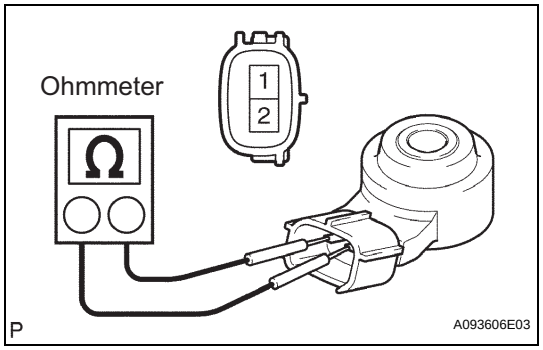

Tester Connection	Specified Condition
1 (Ground) - 2 (Output)	120 to 180 kΩ at 20°C (68°F)

If the result is not as specified, replace the knock sensor.

INSTALLATION

1. INSTALL KNOCK SENSOR

(a) Install the 2 knock sensors with the 2 bolts as shown in the illustration.

Torque: 20 N*m (204 kgf*cm, 15 ft.*lbf)

(b) Connect the 2 knock sensor connectors.

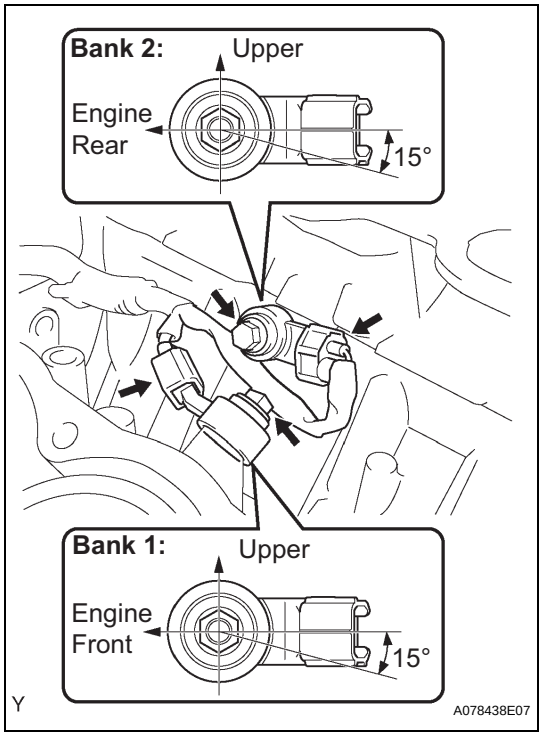

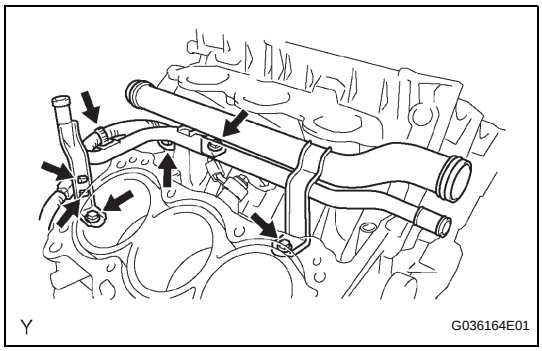

2. **INSTALL NO. 1 WATER OUTLET PIPE**
   (a) Install the water outlet pipe with the 3 bolts.
   Torque: 10 N*m (102 kgf*cm, 7.4 ft.*lbf)
   (b) Install the 4 wire harness clamps.

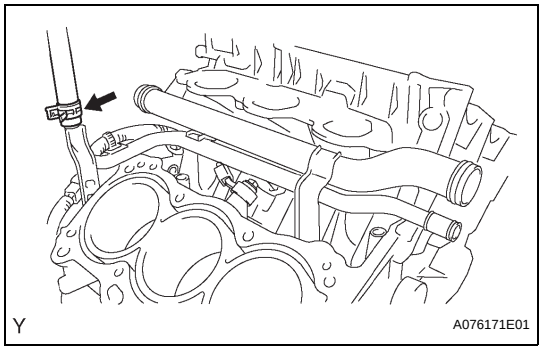

3. **CONNECT HEATER WATER INLET HOSE**
   (a) Connect the heater water inlet hose to the water outlet pipe.
4. **INSPECT CYLINDER HEAD SET BOLT (See page EM-75)**
5. **INSTALL CYLINDER HEAD GASKET (See page EM-92)**
6. **INSTALL CYLINDER HEAD SUB-ASSEMBLY (See page EM-92)**
7. **INSTALL NO. 2 CAMSHAFT BEARING (See page EM-93)**
8. **INSTALL CAMSHAFTS (for Bank 1) (See page EM-93)**
9. **INSTALL NO. 2 CHAIN TENSIONER ASSEMBLY (See page EM-94)**
10. **INSTALL CAMSHAFT TIMING GEARS AND NO. 2 CHAIN (for Bank 1) (See page EM-95)**
11. **INSTALL WATER BY-PASS JOINT RR (See page EM-95)**
12. **INSTALL INTAKE MANIFOLD (See page EM-96)**
13. **CONNECT NO. 2 FUEL PIPE SUB-ASSEMBLY (See page FU-19)**
14. **CONNECT NO. 1 FUEL PIPE SUB-ASSEMBLY (See page FU-17)**
15. **INSTALL EXHAUST MANIFOLD SUB-ASSEMBLY RH (See page EM-97)**
16. **INSTALL MANIFOLD STAY (See page EM-97)**
17. **INSTALL FRONT EXHAUST PIPE ASSEMBLY (See page EM-97)**
18. **INSTALL NO. 2 FRONT EXHAUST PIPE ASSEMBLY (See page EM-99)**
19. **INSTALL EXHAUST PIPE STOPPER BRACKET (for 4WD)**
20. **INSTALL NO. 1 COOL AIR INLET (See page EM-99)**

21. **INSTALL CHAIN SUB-ASSEMBLY**
    Refer to the procedures up to "INSTALL CHAIN TENSIONER SLIPPER" (See page EM-27).
22. **CHECK FOR FUEL LEAKAGE**
23. **CHECK FOR EXHAUST GAS LEAKAGE**
24. **INSPECT IGNITION TIMING (See page EM-1)**
25. **INSPECT ENGINE IDLING SPEED (See page EM-2)**
26. **INSPECT COMPRESSION (See page EM-3)**
27. **INSPECT CO/HC (See page EM-3)**
28. **INSPECT AND ADJUST FRONT WHEEL ALIGNMENT** (See page SP-2)

EFI RELAY

ON-VEHICLE INSPECTION

1. DISCONNECT CABLE FROM NEGATIVE BATTERY TERMINAL

2. REMOVE EFI RELAY

(a) Remove the relay block cover upper.

(b) Remove the EFI relay.

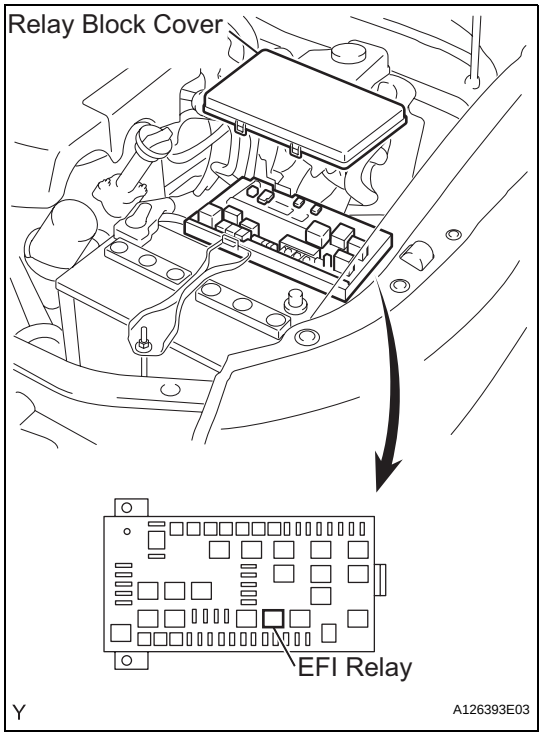

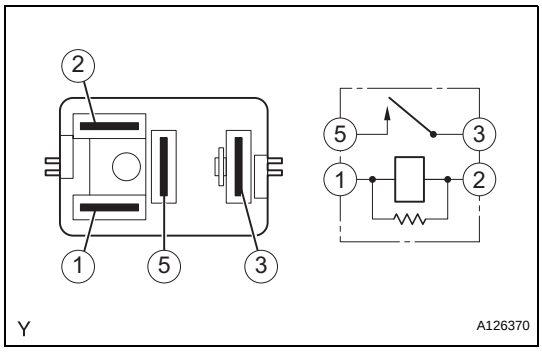

3. INSPECT EFI RELAY

(a) Check the resistance.

(1) Using an ohmmeter, measure the resistance between the terminals.

Standard resistance

Tester Connection	Specified Condition
3 - 5	10 kΩ or higher
	Below 1 Ω (Battery voltage applied to terminals 1 and 2)

If the result is not as specified, replace the EFI relay.

4. INSTALL EFI RELAY

(a) Install the EFI relay.

(b) Install the relay block cover upper.

5. CONNECT CABLE TO NEGATIVE BATTERY TERMINAL

Torque: 3.9 N*m (40 kgf*cm, 35 in.*lbf)

CIRCUIT OPENING RELAY

ON-VEHICLE INSPECTION

1. DISCONNECT CABLE FROM NEGATIVE BATTERY TERMINAL

2. REMOVE CIRCUIT OPENING RELAY

(a) Remove the relay block cover upper.

(b) Remove the circuit opening relay.

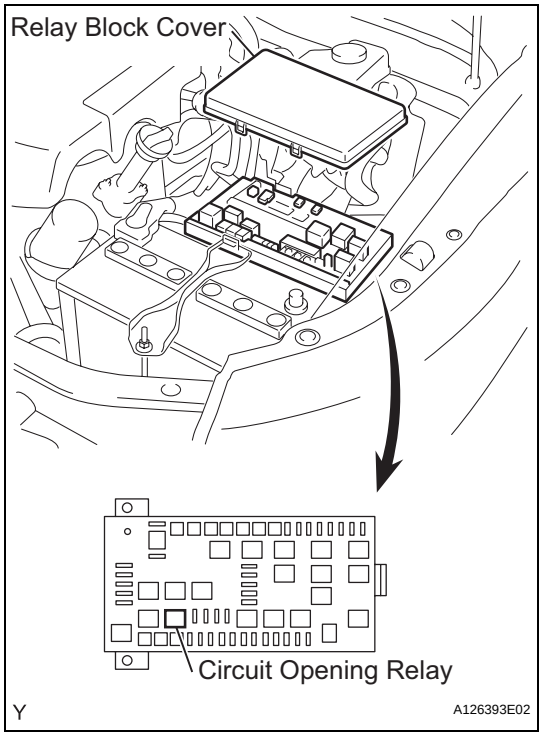

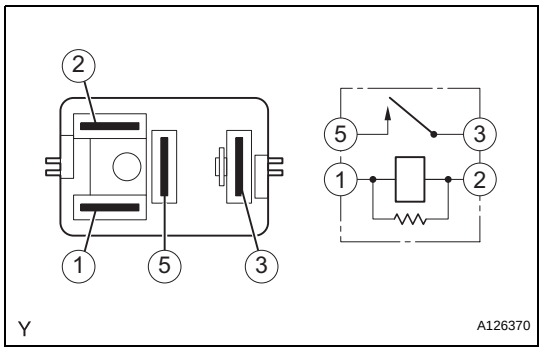

3. INSPECT CIRCUIT OPENING RELAY

(a) Check the resistance.

(1) Using an ohmmeter, measure the resistance between the terminals.

Standard resistance

Tester Connection	Specified Condition
3 - 5	10 kΩ or higher
	Below 1 Ω (Battery voltage applied to terminals 1 and 2)

If the result is not as specified, replace the circuit opening relay.

4. INSTALL CIRCUIT OPENING RELAY

(a) Install the circuit opening relay.

(b) Install the relay block cover upper.

5. CONNECT CABLE TO NEGATIVE BATTERY TERMINAL

Torque: 3.9 N*m (40 kgf*cm, 35 in.*lbf)

FUEL PUMP RELAY

ON-VEHICLE INSPECTION

1. DISCONNECT CABLE FROM NEGATIVE BATTERY TERMINAL

2. REMOVE FUEL PUMP RELAY

(a) Remove the relay block cover upper.

(b) Remove the fuel pump relay.

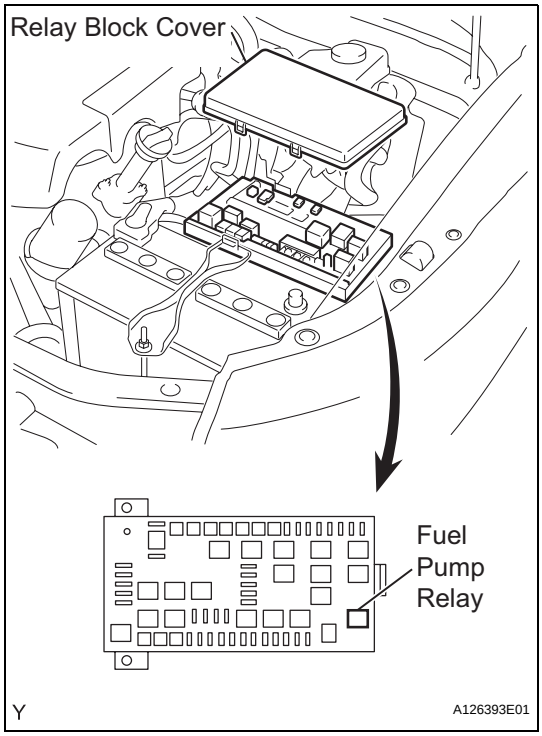

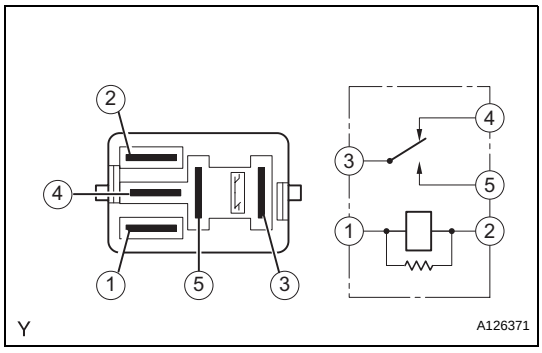

3. INSPECT FUEL PUMP RELAY

(a) Check the resistance.

(1) Using an ohmmeter, measure the resistance between the terminals.

Standard resistance

Tester Connection	Specified Condition
3 - 4	Below 1 Ω
	10 kΩ or higher (Battery voltage applied to terminals 1 and 2)
3 - 5	10 kΩ or higher
	Below 1 Ω (Battery voltage applied to terminals 1 and 2)

If the result is not as specified, replace the fuel pump relay.

4. INSTALL FUEL PUMP RELAY

(a) Install the fuel pump relay.

(b) Install the relay block cover upper.

5. CONNECT CABLE TO NEGATIVE BATTERY TERMINAL

Torque: 3.9 N*m (40 kgf*cm, 35 in.*lbf)

ECM

COMPONENTS

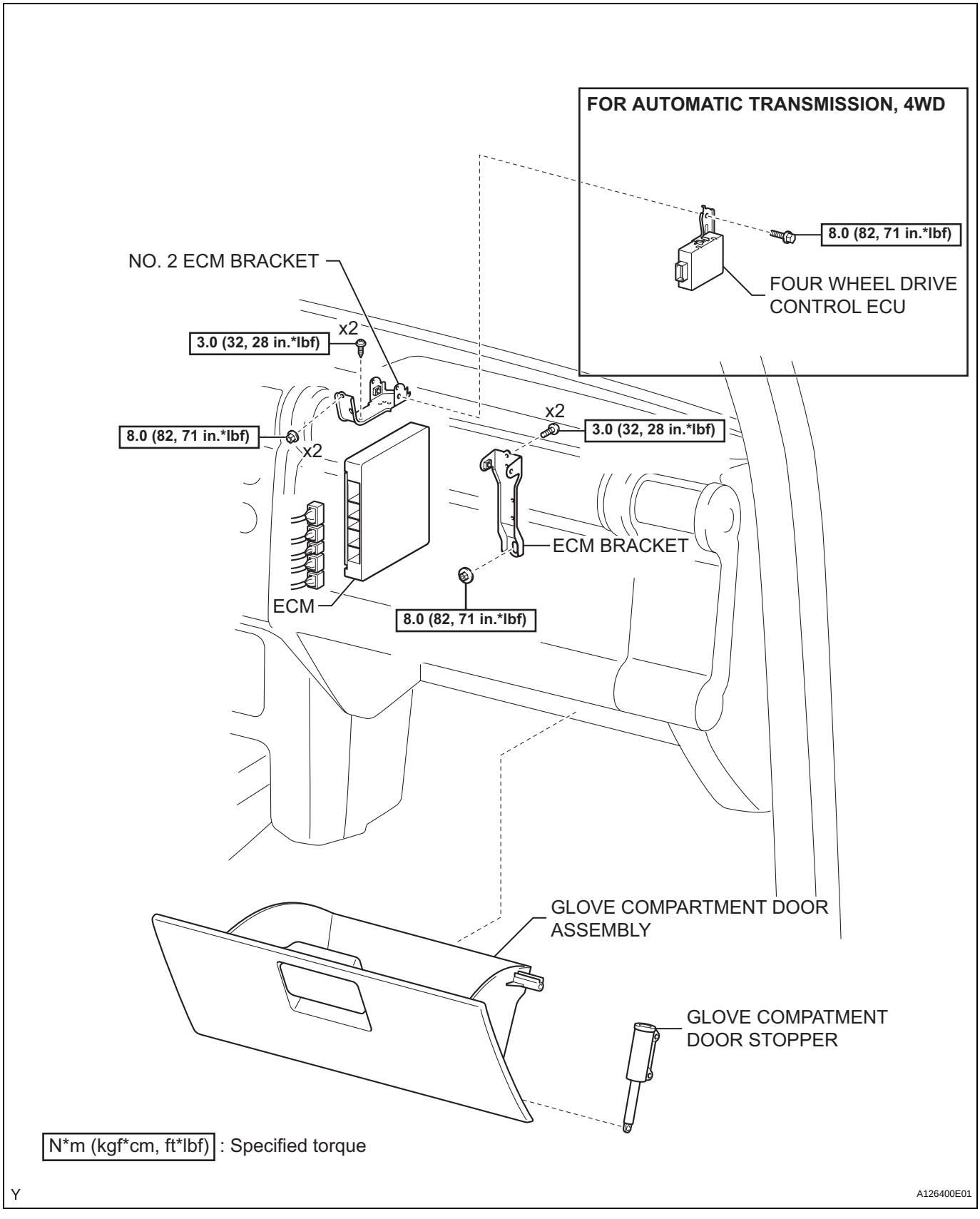

ES

REMOVAL

NOTICE:

- **Perform the RESET MEMORY (AT initialization) when replacing the automatic transmission assembly, engine assembly or ECM (See page AT-19 or AT-19).**
- **Perform the REGISTRATION (VIN registration) when replacing the ECM (See page ES-15).**
- **If the ECM has been replaced or RESET MEMORY (AT initialization) has been performed, set up the function of the ATF (Automatic Transmission Fluid) temperature warning lamp (See page AT-19 or AT-19).**

1. DISCONNECT CABLE FROM NEGATIVE BATTERY TERMINAL

2. REMOVE GLOVE COMPARTMENT DOOR ASSEMBLY (See page IP-15)

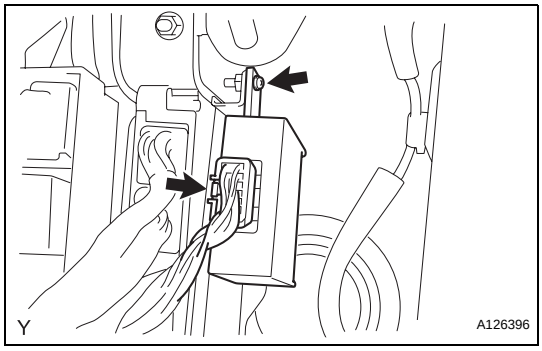

3. REMOVE FOUR WHEEL DRIVE CONTROL ECU (for Automatic Transmission 4WD)

(a) Disconnect the connector.
(b) Remove the screw and four wheel drive control ECU.

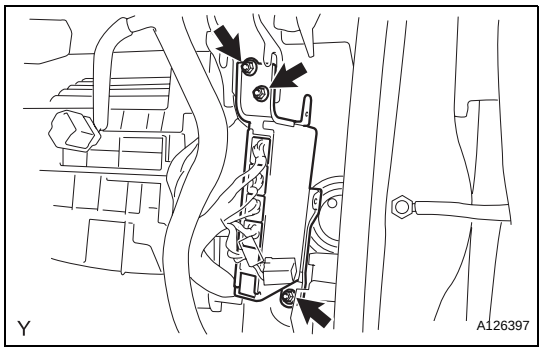

4. REMOVE ECM

(a) Disconnect the 5 connectors.
(b) Remove the 3 nuts, then remove the ECM.

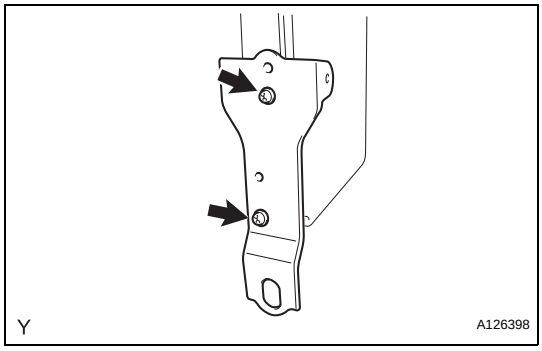

5. REMOVE ECM BRACKET

(a) Remove the 2 screws, then remove the ECM bracket.

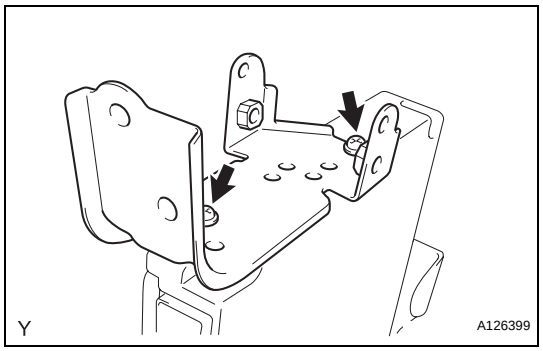

6. REMOVE NO. 2 ECM BRACKET

(a) Remove the 2 screws, then remove the No. 2 ECM bracket.

INSTALLATION

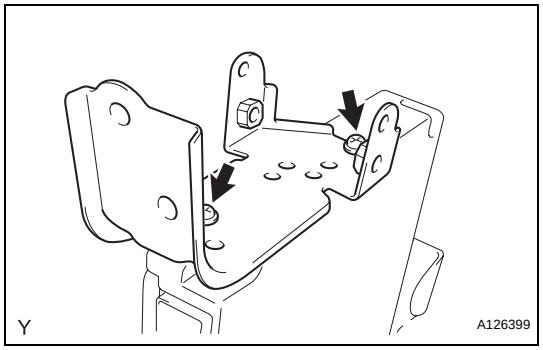

1. INSTALL NO. 2 ECM BRACKET

(a) Install the No. 2 ECM bracket with the 2 screws.
Torque: 3.0 N*m (32 kgf*cm, 28 in.*lbf)

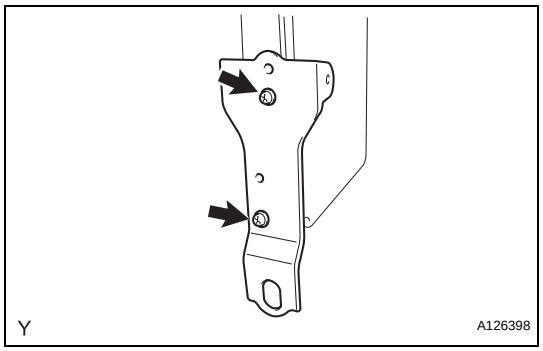

2. INSTALL ECM BRACKET

(a) Install the ECM bracket with the 2 screws.
Torque: 3.0 N*m (32 kgf*cm, 28 in.*lbf)

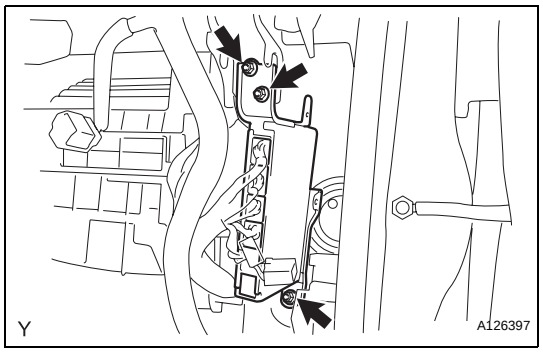

3. INSTALL ECM

(a) Install the ECM with the 3 nuts.
Torque: 8.0 N*m (82 kgf*cm, 71 in.*lbf)

(b) Connect the 5 connectors.

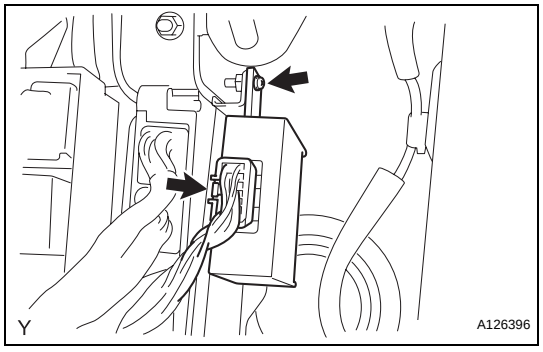

4. INSTALL FOUR WHEEL DRIVE CONTROL ECU (for Automatic Transmission 4WD)

(a) Install the four wheel drive control ECU with the bolt.
Torque: 8.0 N*m (82 kgf*cm, 71 in.*lbf)

(b) Connect the connector.

5. INSTALL GLOVE COMPARTMENT DOOR ASSEMBLY (See page IP-28)

6. CONNECT CABLE TO NEGATIVE BATTERY TERMINAL
Torque: 3.9 N*m (40 kgf*cm, 35 in.*lbf)

ACCELERATOR PEDAL

COMPONENTS

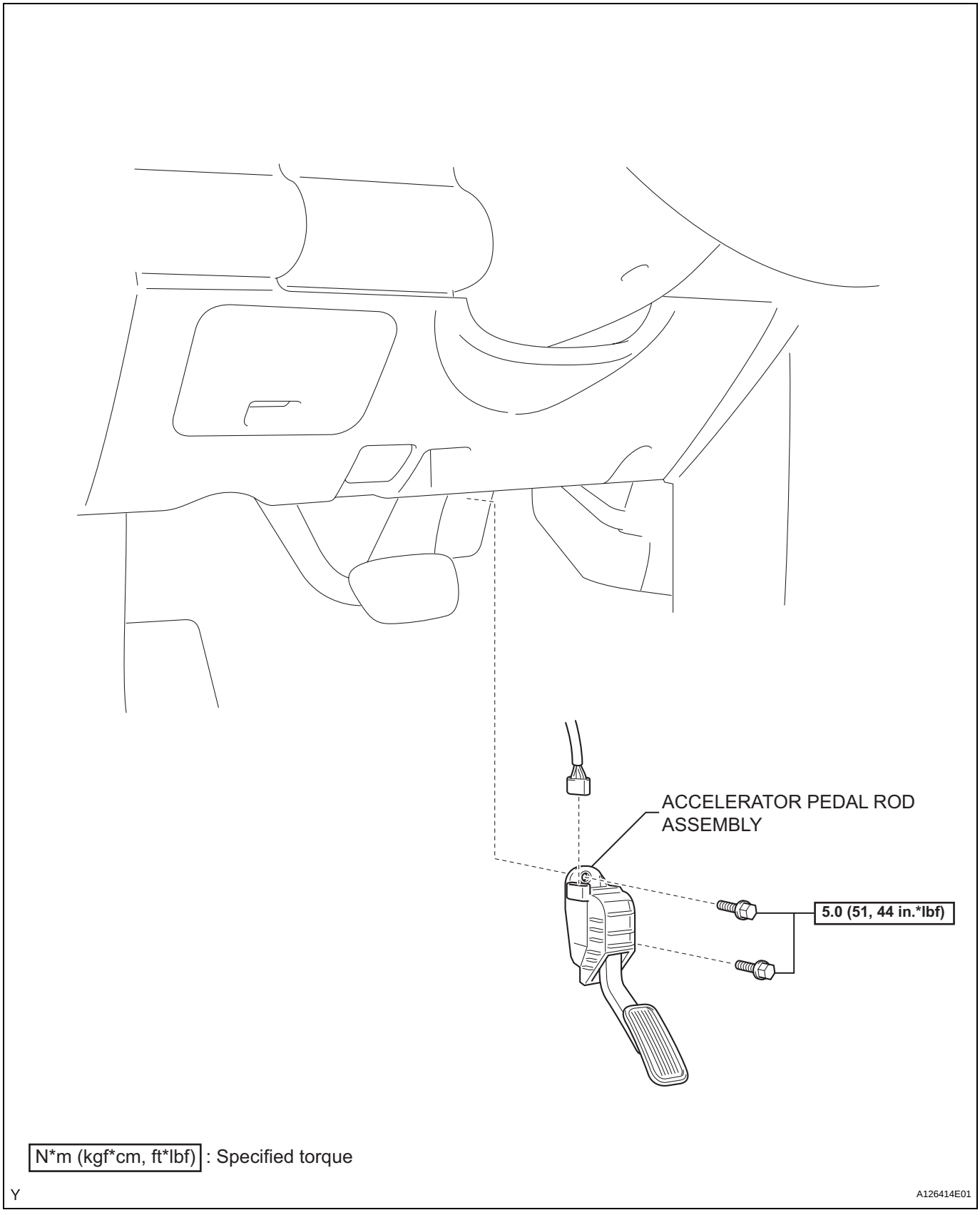

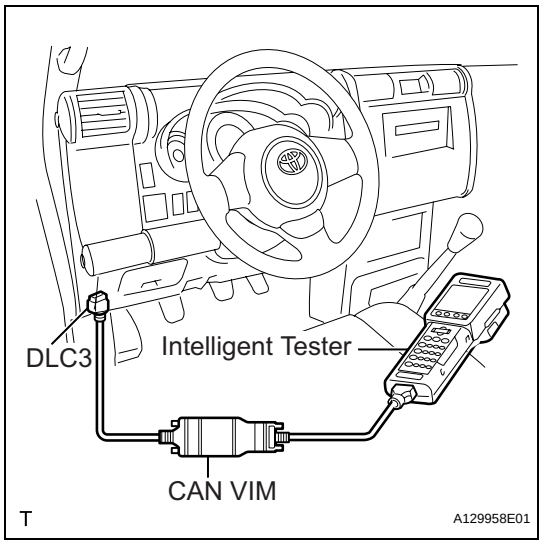

ON-VEHICLE INSPECTION

1. INSPECT ACCELERATOR PEDAL ROD

(a) Check the voltage.

(1) Turn the ignition switch to ON.

(2) Turn the intelligent tester ON.

(3) Start the engine and warm it up.

(4) Select the following menu items: DIAGNOSIS / ENHANCED OBD II / DATA LIST / PRIMARY / ACCEL POS #1, ACCEL POS #2.

(5) Operate the accelerator pedal, then check that the ACCEL POS #1 and ACCEL POS #2 values are within the specifications.

Standard voltage:

ACCELE POS #1

Accelerator Pedal Condition	Specified Condition
Released	0.5 to 1.1 V
Depressed	2.6 to 4.5 V

ACCELE POS #2

Accelerator Pedal Condition	Specified Condition
Released	1.2 to 2.0 V
Depressed	3.4 to 5.0 V

If the result is not as specified, check the accelerator pedal rod, wire harness and ECM.

ES

REMOVAL

1. DISCONNECT CABLE FROM NEGATIVE BATTERY TERMINAL

2. REMOVE ACCELERATOR PEDAL ROD ASSEMBLY

(a) Disconnect the accelerator position sensor connector.

(b) Remove the 2 bolts, then remove the accelerator pedal.

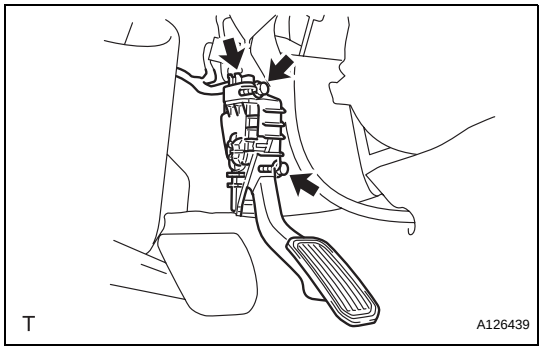

INSTALLATION

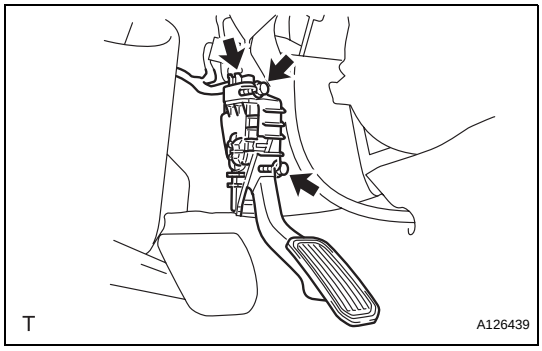

1. INSTALL ACCELERATOR PEDAL ROD ASSEMBLY

NOTICE:

- **Avoid any physical impact to the accelerator pedal assembly.**
- **Do not disassemble the accelerator pedal assembly.**

(a) Install the accelerator pedal with the 2 bolts.
Torque: 5.0 N*m (51 kgf*cm, 44 in.*lbf)

(b) Connect the accelerator position sensor connector.

2. CONNECT CABLE TO NEGATIVE BATTERY TERMINAL
Torque: 3.9 N*m (40 kgf*cm, 35 in.*lbf)

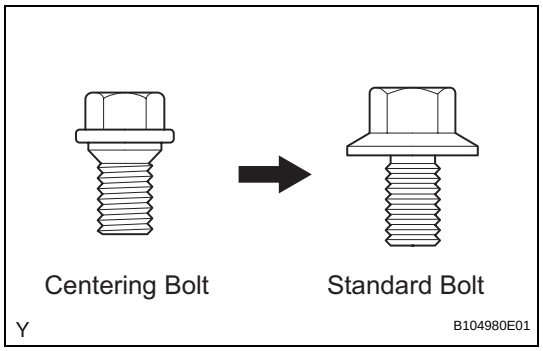

HOOD

ADJUSTMENT

HINT:

- Centering bolts are used to mount the hood hinge and hood lock. The hood and hood lock cannot be adjusted with the centering bolts on. Substitute standard bolts (with washers) for the centering bolts when making adjustments.
- For bolts without torque specifications, check the standard bolt chart (see page SS-2).

1. INSPECT HOOD SUB-ASSEMBLY

(a) Check that the clearance measurements are within the standard ranges.

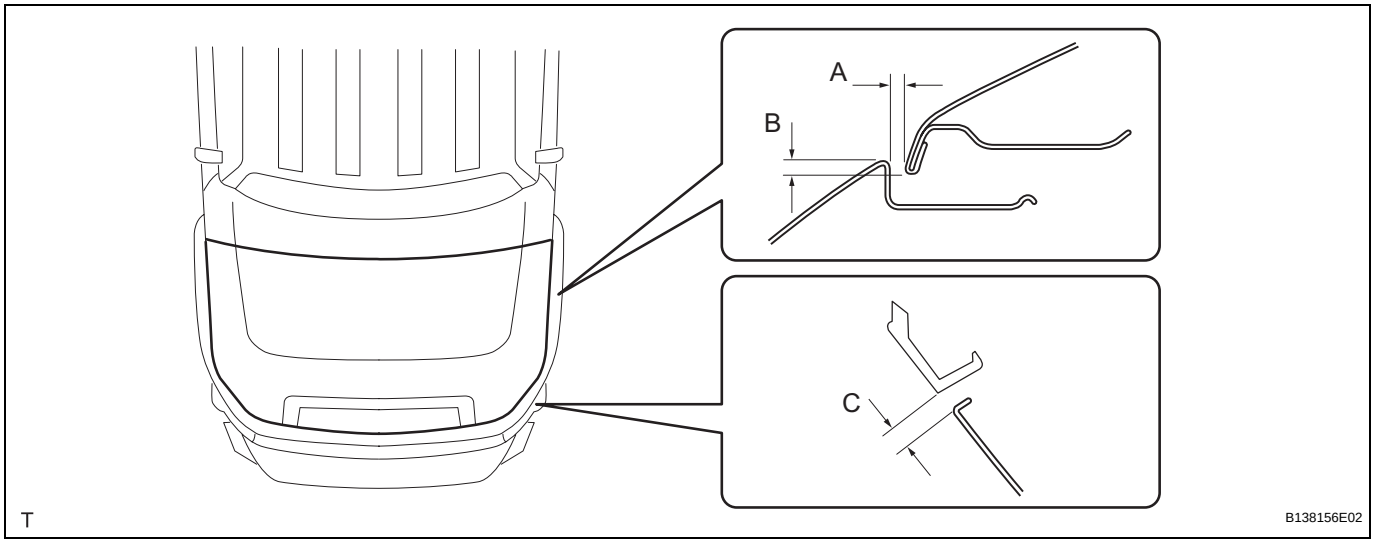

Standard:

Area	Measurement
A	4 to 7 mm (0.157 to 0.276 in.)
B	1.4 to 4.4 mm (0.055 to 0.173 in.)
C	5 to 8 mm (0.197 to 0.315 in.)

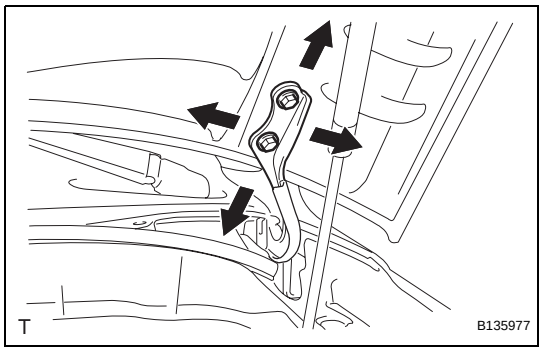

2. ADJUST HOOD SUB-ASSEMBLY

(a) Adjust the hood position.

(1) Loosen the 4 hinge bolts on the hood side.

(2) Move the hood and adjust the clearance between the hood and front fender. Make sure that the clearance is within the standard range.
Standard(A):
4.0 to 7.0 mm (0.157 to 0.276 in.)

(3) Tighten the hood side hinge bolts after the adjustment.
Torque: 13 N*m (133 kgf*cm, 10 ft.*lbf)

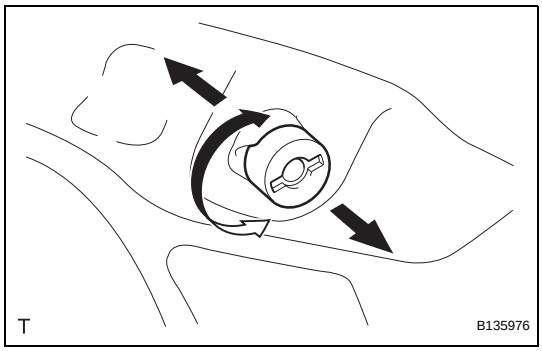

(b) Adjust the cushion rubber so that the heights of the hood and the fender are equal.
(1) Raise or lower the hood front end by turning the cushion rubber. Make sure that the clearance is within the standard range.
HINT:
Raise or lower the cushion rubber by turning it.

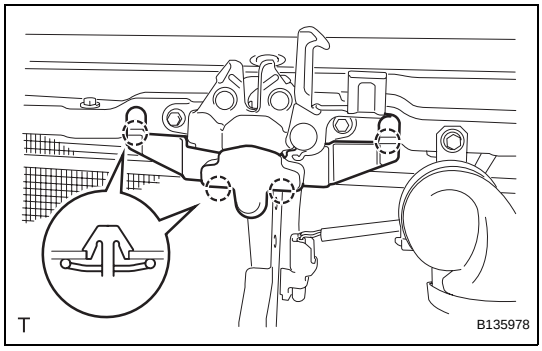

(c) Adjust the hood lock.
(1) Disengage the 4 claws and remove the hood lock release lever protector.

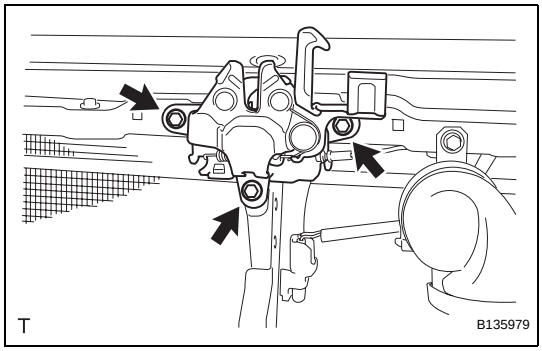

(2) Loosen the 3 bolts.

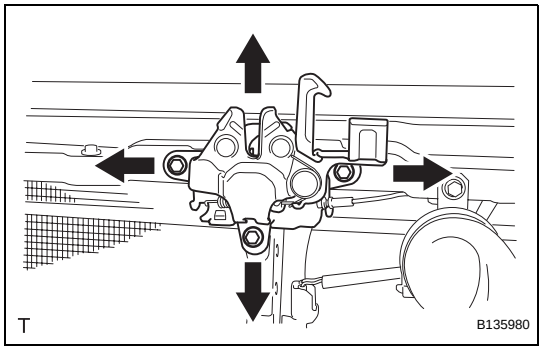

(3) Adjust the hood lock position so that the striker can enter it smoothly.

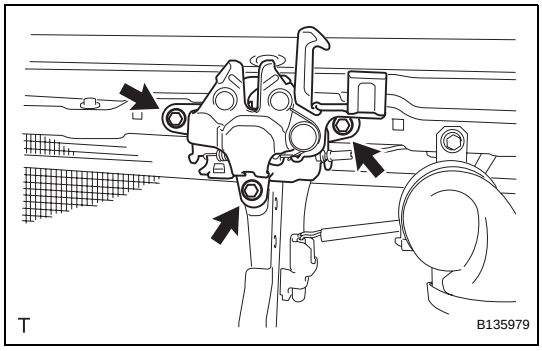

(4) Tighten the 3 bolts after the adjustment.
Torque: 8.0 N*m (82 kgf*cm, 71 in.*lbf)

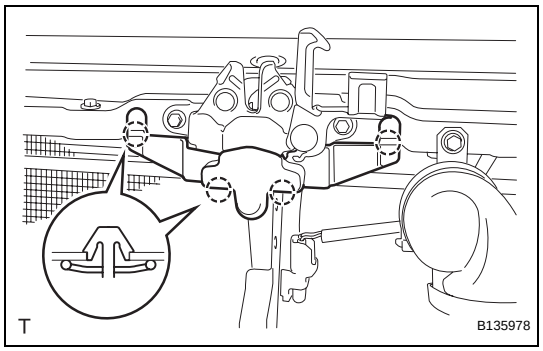

(5) Engage the 4 claws and install the hood lock release lever protector.

HOOD SUPPORT

COMPONENTS

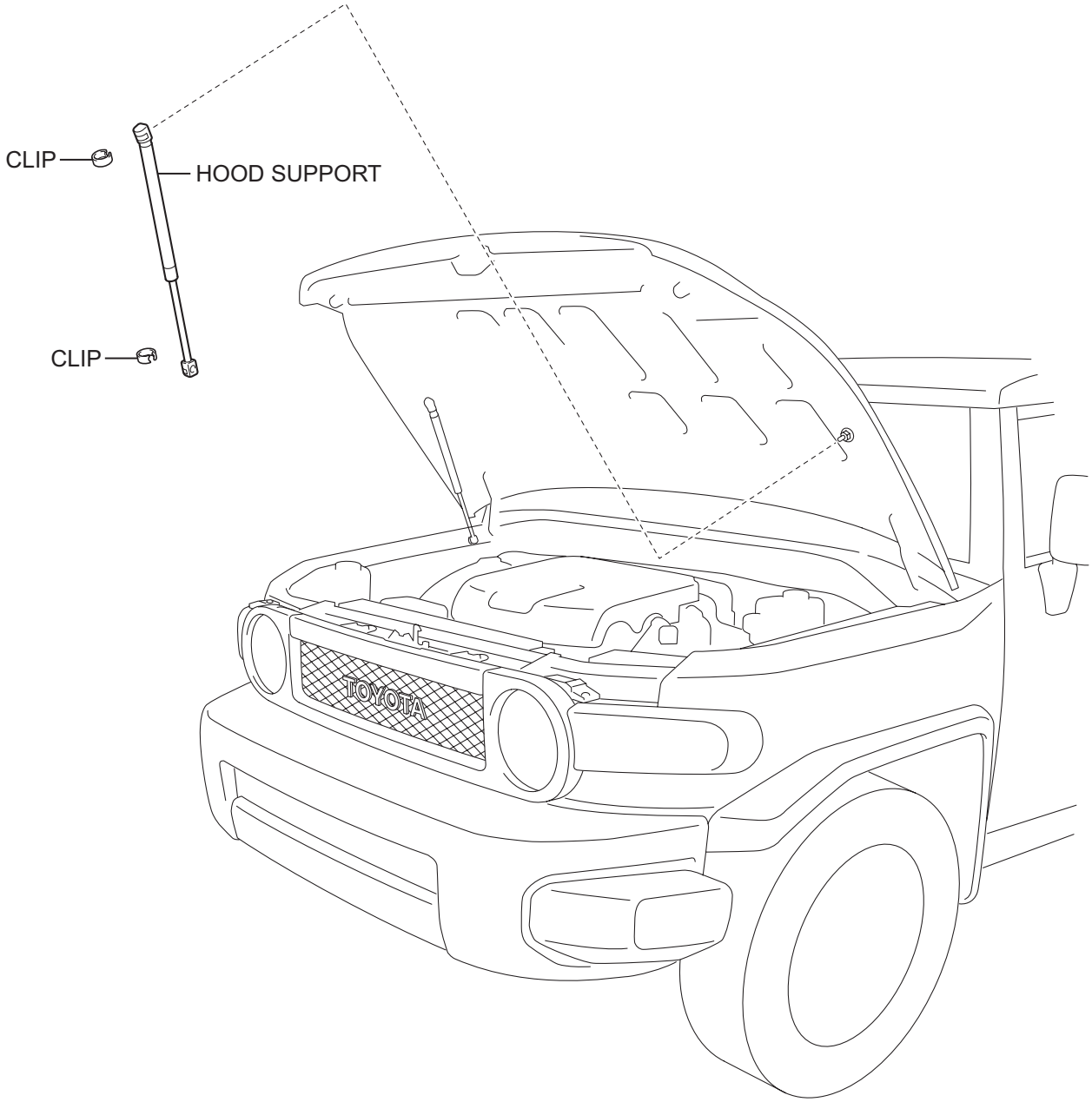

Y

B135984E01

REMOVAL

HINT:

- Use the same procedure for both the RH and LH sides.
- The procedure described below is for the LH side.

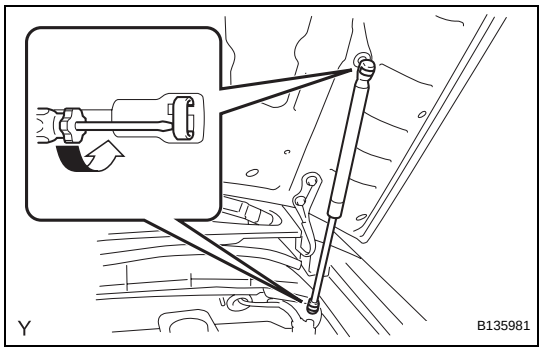

1. REMOVE HOOD SUPPORT

(a) Using a screwdriver with its tip wrapped in protective tape, remove the 2 stop rings and the hood support.

NOTICE:

- **Do not touch the rod of the hood support with gloves, to avoid fibers from adhering.**
- **When foreign matter adheres to the rod, it prevents the rod from moving smoothly and reduces its holding power.**

HINT:

Support the hood by hand while removing the hood support.

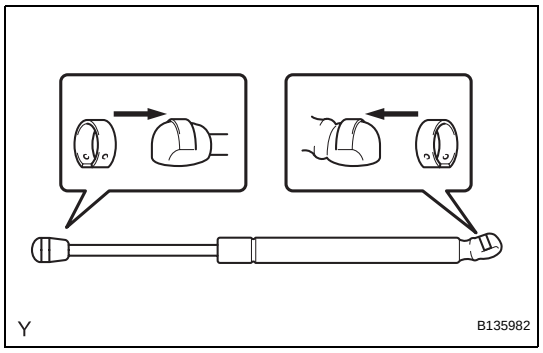

INSTALLATION

1. INSTALL HOOD SUPPORT

(a) Install the 2 stop rings onto the hood support.

(b) Install the hood support.

DISPOSAL

HINT:

- Use the same procedure for both the RH and LH sides.
- The procedure described below is for the LH side.

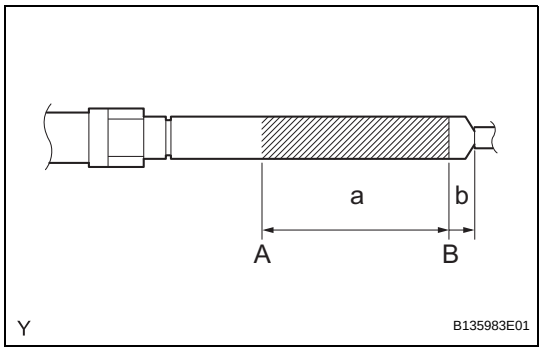

1. DISPOSE OF HOOD SUPPORT

(a) Horizontally fix the hood support in a vise with the piston-rod pulled out.

(b) Wearing protective glasses, using a metal saw gradually cut the shaded part between A and B, shown in the illustration, to gradually release the gas.

Specification

Area	Measurement
a	80 mm (3.15 in.)
b	20 mm (0.80 in.)

CAUTION:

- **Cover the area that is being cut with a shop rag or a piece of cloth because there is a possibility that metal shards may be dispersed by the gas.**
- **The gas is colorless, odorless and harmless.**

FRONT DOOR

COMPONENTS

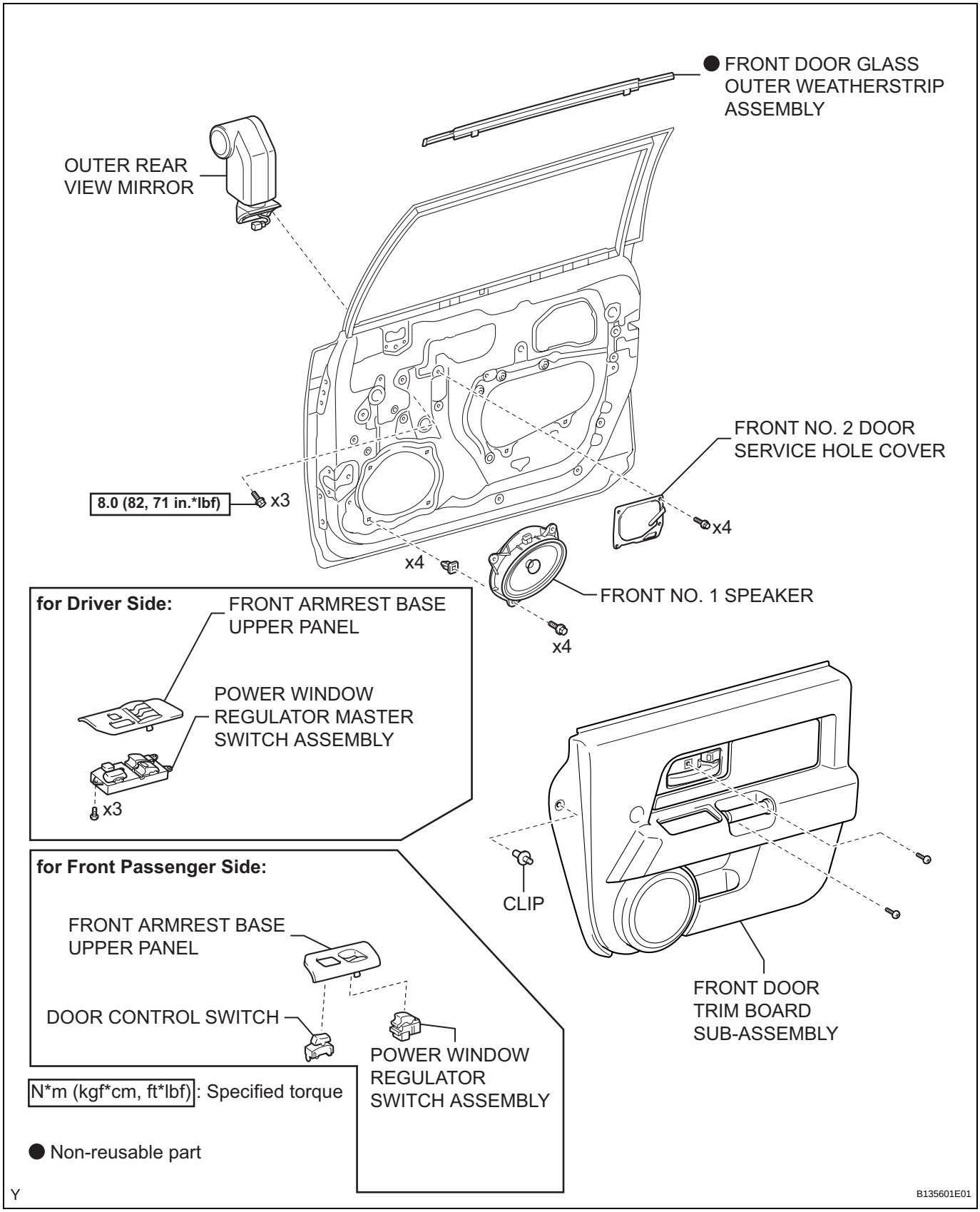

ED

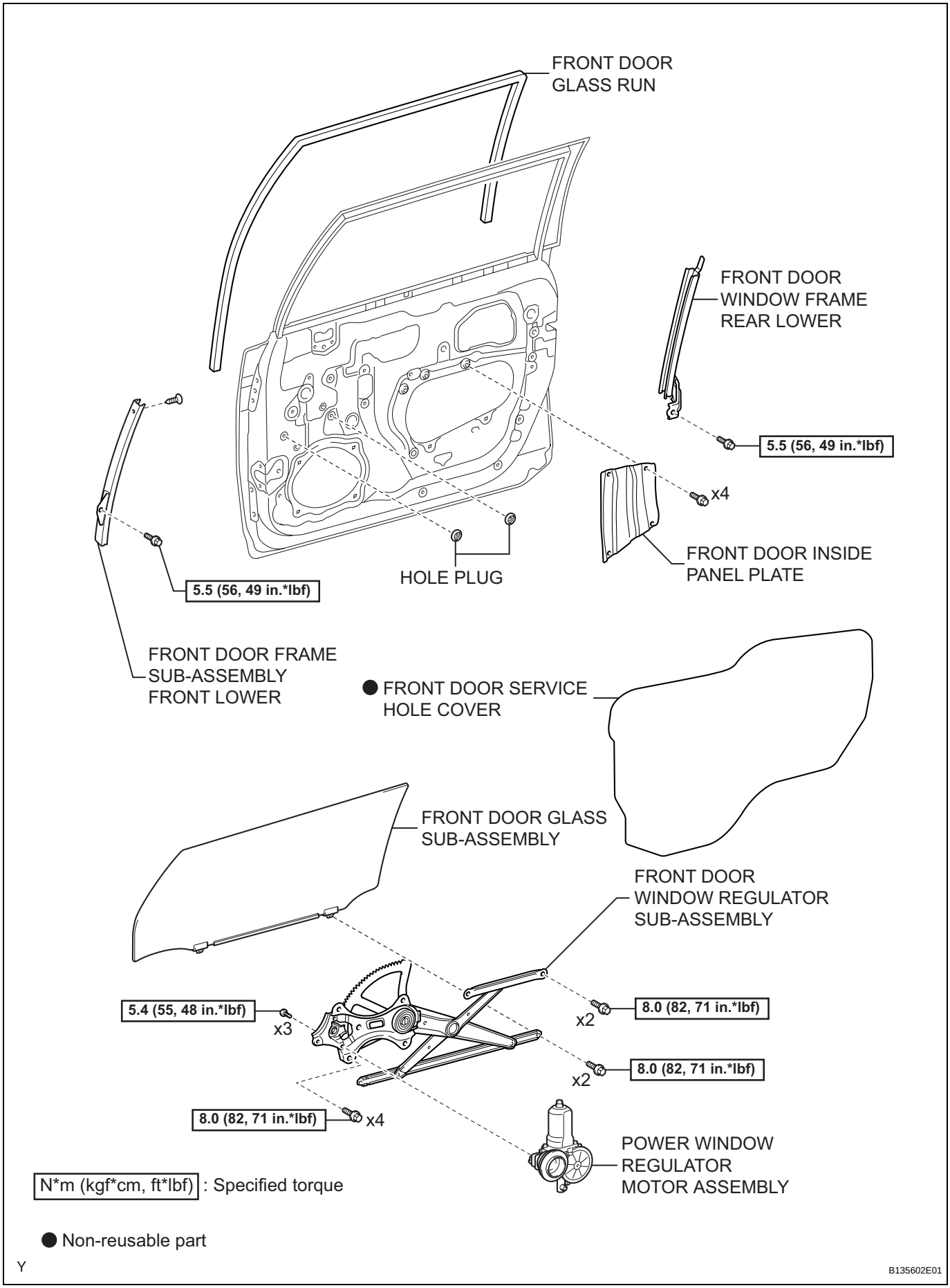
FRONT DOOR GLASS RUN
FRONT DOOR WINDOW FRAME REAR LOWER
5.5 (56, 49 in.*lbf)
x4
FRONT DOOR INSIDE PANEL PLATE
HOLE PLUG
5.5 (56, 49 in.*lbf)
FRONT DOOR FRAME SUB-ASSEMBLY FRONT LOWER
● FRONT DOOR SERVICE HOLE COVER
FRONT DOOR GLASS SUB-ASSEMBLY
FRONT DOOR WINDOW REGULATOR SUB-ASSEMBLY
5.4 (55, 48 in.*lbf)
x3
8.0 (82, 71 in.*lbf)
x2
8.0 (82, 71 in.*lbf)
x2
8.0 (82, 71 in.*lbf)
x4
POWER WINDOW REGULATOR MOTOR ASSEMBLY
N*m (kgf*cm, ft*lbf) : Specified torque
● Non-reusable part
Y
B135602E01

ED

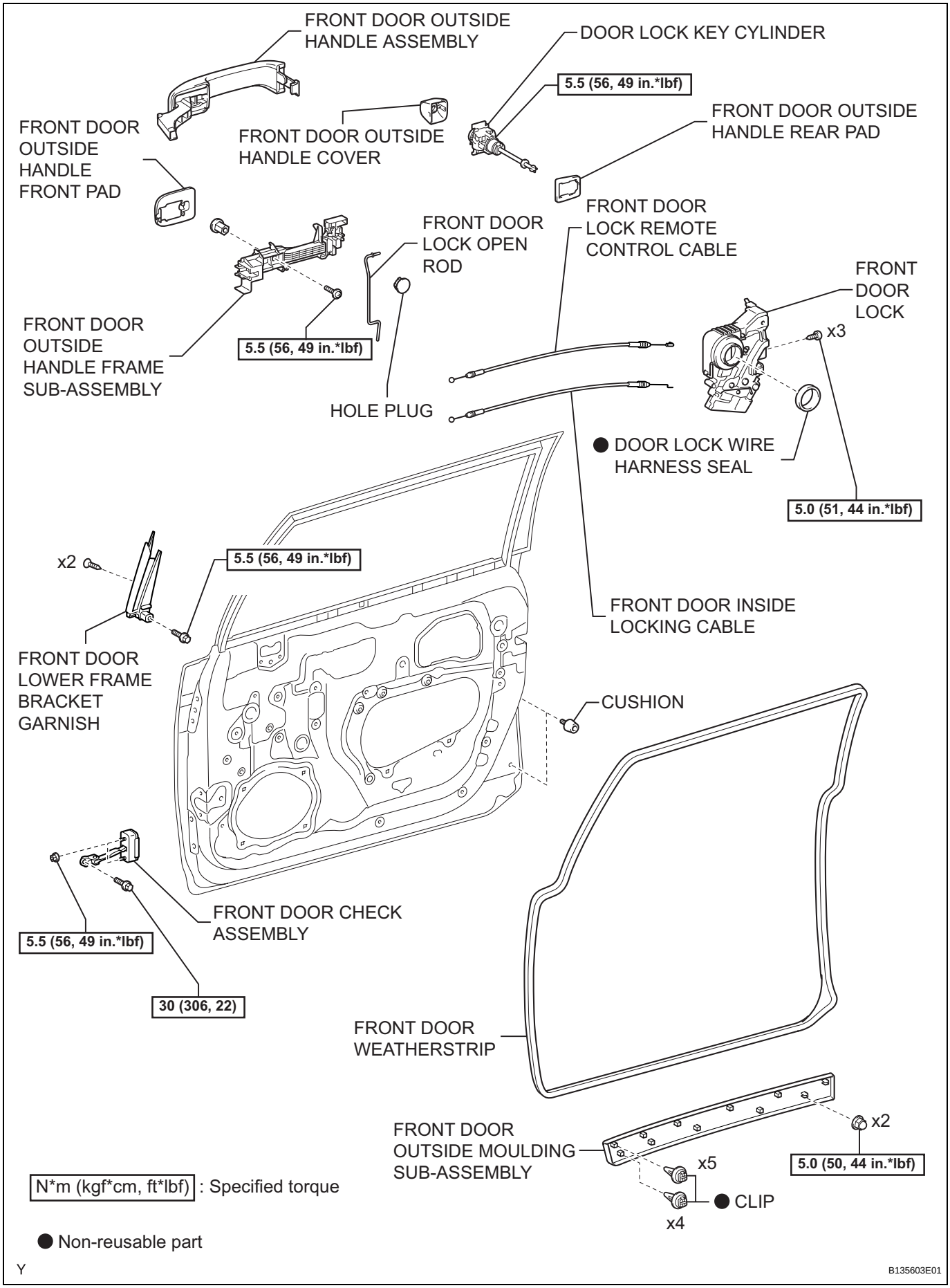
FRONT DOOR OUTSIDE HANDLE ASSEMBLY
DOOR LOCK KEY CYLINDER
5.5 (56, 49 in.*lbf)
FRONT DOOR OUTSIDE HANDLE REAR PAD
FRONT DOOR OUTSIDE HANDLE COVER
FRONT DOOR OUTSIDE HANDLE FRONT PAD
FRONT DOOR LOCK REMOTE CONTROL CABLE
FRONT DOOR LOCK OPEN ROD
FRONT DOOR LOCK
x3
FRONT DOOR OUTSIDE HANDLE FRAME SUB-ASSEMBLY
5.5 (56, 49 in.*lbf)
HOLE PLUG
● DOOR LOCK WIRE HARNESS SEAL
5.0 (51, 44 in.*lbf)
x2
5.5 (56, 49 in.*lbf)
FRONT DOOR INSIDE LOCKING CABLE
FRONT DOOR LOWER FRAME BRACKET GARNISH
CUSHION
FRONT DOOR CHECK ASSEMBLY
5.5 (56, 49 in.*lbf)
30 (306, 22)
FRONT DOOR WEATHERSTRIP
FRONT DOOR OUTSIDE MOULDING SUB-ASSEMBLY
x2
5.0 (50, 44 in.*lbf)
x5
● CLIP
x4
N*m (kgf*cm, ft*lbf) : Specified torque
● Non-reusable part
Y
B135603E01

ED

DISASSEMBLY

HINT:

- Use the same procedure for both the RH and LH sides.
- The procedure described below is for the RH side.

1. DISCONNECT CABLE FROM NEGATIVE BATTERY TERMINAL

2. REMOVE FRONT ARMREST BASE UPPER PANEL

(a) Disengage the 3 claws and clip and remove the front armrest base upper panel.

(b) Disconnect the connector.

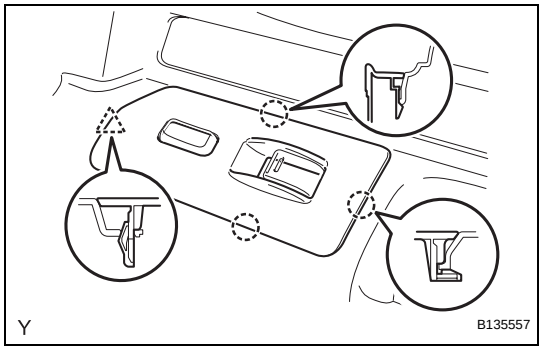

3. REMOVE POWER WINDOW REGULATOR MASTER SWITCH ASSEMBLY (for Driver Side) (See page WS-25)

4. REMOVE POWER WINDOW REGULATOR SWITCH ASSEMBLY (for Front Passenger Side) (See page WS-29)

5. REMOVE DOOR CONTROL SWITCH (for Front Passenger Side) (See page DL-93)

6. REMOVE FRONT DOOR TRIM BOARD SUB-ASSEMBLY

(a) for LH side:
Using a screwdriver with its tip wrapped in protective tape, open the 2 covers.

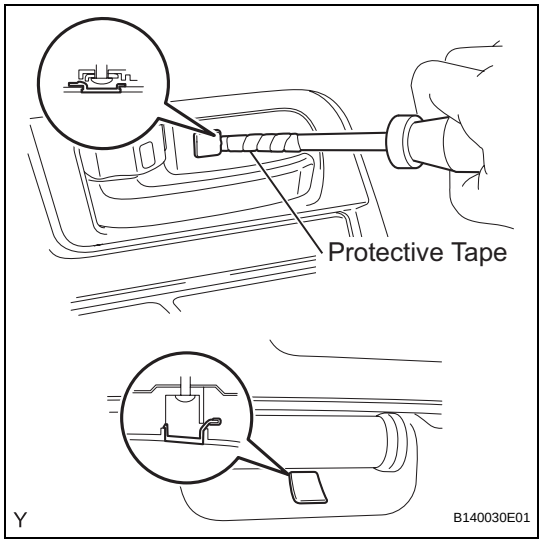

(b) for RH side:
Using a screwdriver with its tip wrapped in protective tape, open the 2 covers.

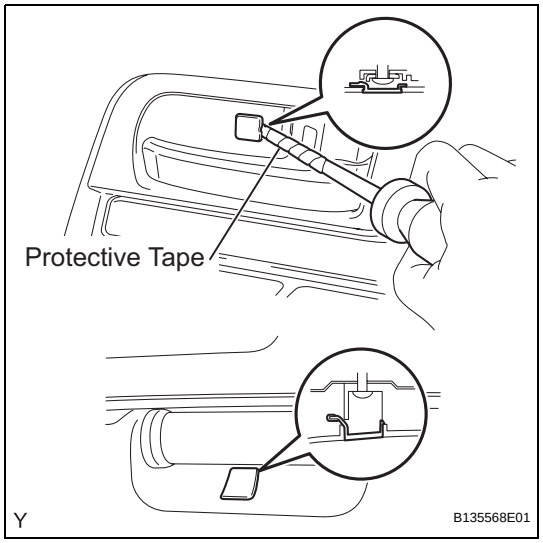

ED

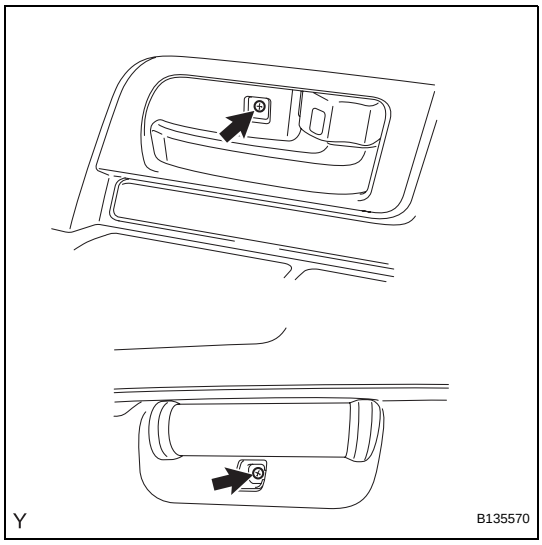

(c) Remove the 2 screws.

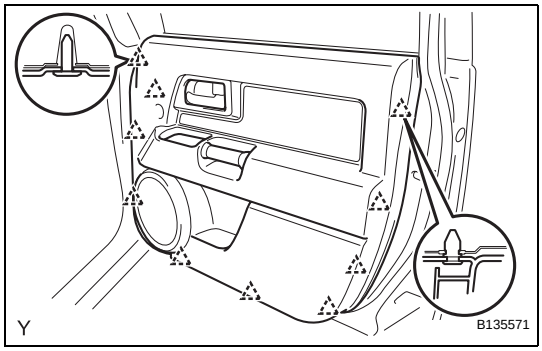

(d) Disengage the 10 clips.

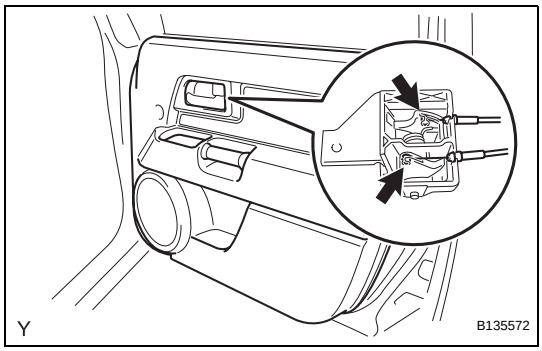

(e) Disconnect the front door lock remote control cable and front door inside locking cable and remove the front door trim board.

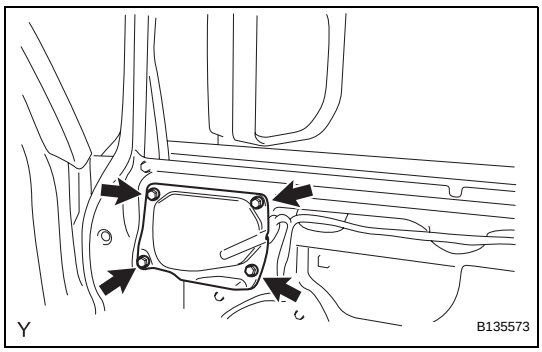

7. REMOVE FRONT NO.2 DOOR SERVICE HOLE COVER

(a) Remove the 4 screws and front No. 2 door service hole cover.

8. REMOVE OUTER REAR VIEW MIRROR

HINT:
Use the same procedure as for the LH side (see page MI-8).

9. REMOVE FRONT DOOR GLASS OUTER WEATHERSTRIP ASSEMBLY

HINT:
Use the same procedure as for the LH side (see page ET-39).

10. REMOVE FRONT NO. 1 SPEAKER (See page AV-58)

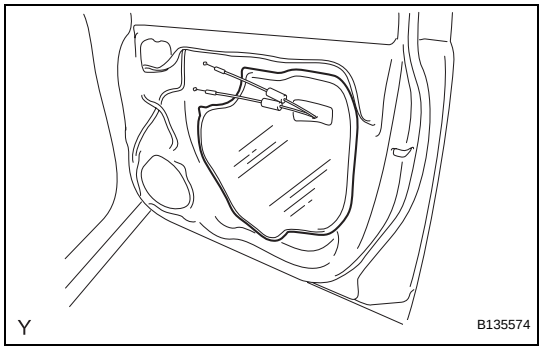

11. REMOVE FRONT DOOR SERVICE HOLE COVER

(a) Remove the front door service hole cover.

NOTICE:

Remove any tape remaining on the door side.

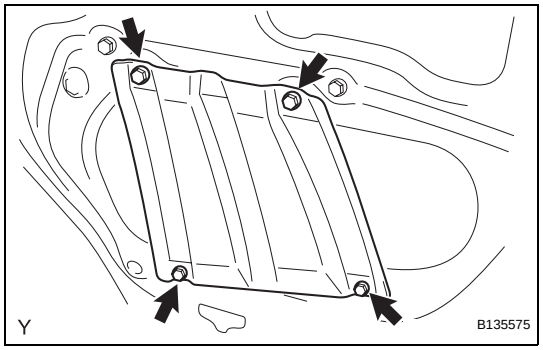

12. REMOVE FRONT DOOR INSIDE PANEL PLATE

(a) Remove the 4 screws and the front door inside panel plate.

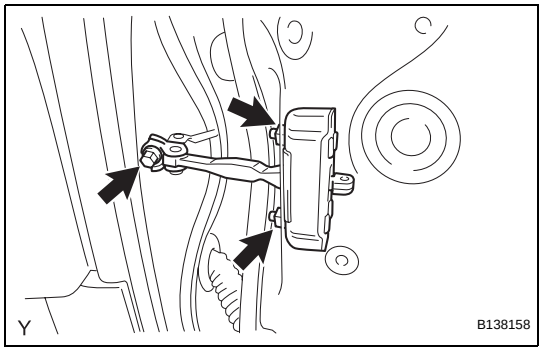

13. REMOVE FRONT DOOR CHECK ASSEMBLY

(a) Remove the 2 nuts and bolt, then remove the front door check.

NOTICE:

Do not drop or damage the door check when removing the bolts.

HINT:

Remove the door check through the service hole.

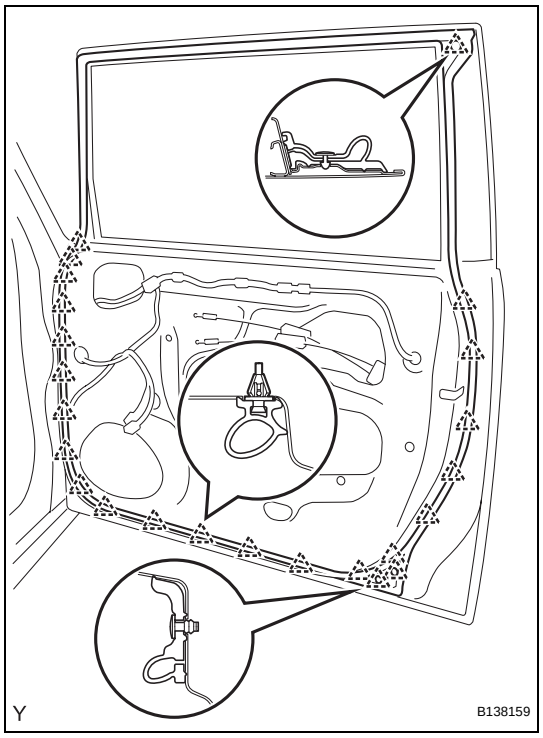

14. REMOVE FRONT DOOR WEATHERSTRIP

(a) Disengage the 24 clips and remove the front door weatherstrip.

NOTICE:

Remove any tape remaining on the door side.

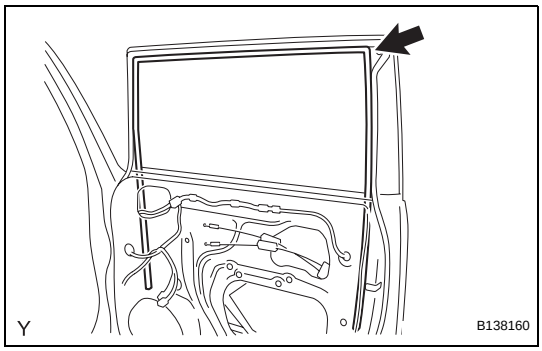

15. REMOVE FRONT DOOR GLASS RUN

(a) Remove the front door glass run.

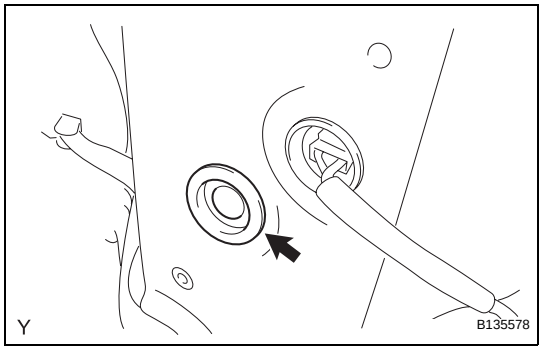

16. REMOVE FRONT DOOR FRAME SUB-ASSEMBLY FRONT LOWER

(a) Remove the hole plug.

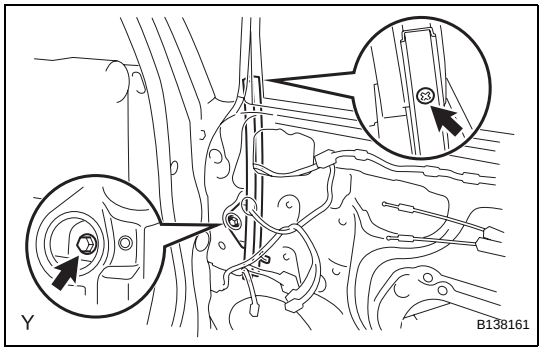

(b) Remove the bolt and screw, then remove the front door frame sub-assembly front lower.

NOTICE:

Do not drop or damage the front door frame sub-assembly front lower when removing the bolt and screw.

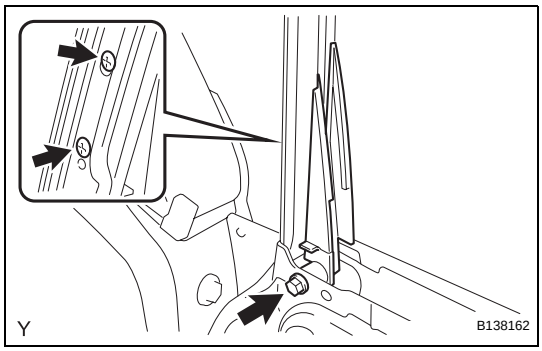

17. REMOVE FRONT DOOR LOWER FRAME BRACKET GARNISH

(a) Remove the bolt and the 2 screws and remove front door lower frame bracket garnish.

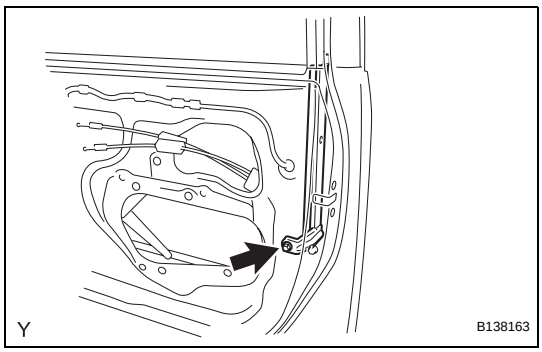

18. REMOVE FRONT DOOR WINDOW FRAME REAR LOWER

(a) Remove the bolt, then remove the front door window frame rear lower.

NOTICE:

Do not drop or damage the front door window frame rear lower when removing the bolt.

ED

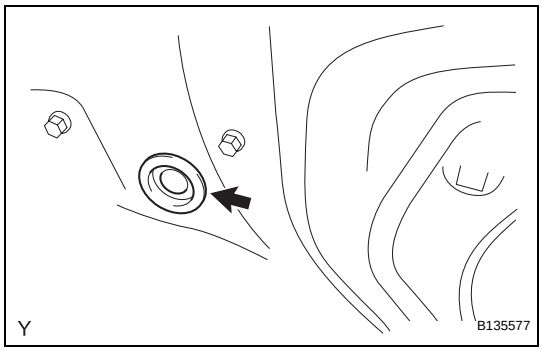

19. REMOVE FRONT DOOR GLASS SUB-ASSEMBLY

(a) Remove the hole plug.

(b) Driver side:
Provisionally install the power window regulator master switch.

(c) Passenger side:
Provisionally install the power window regulator switch.

(d) Move the front door glass until the 2 bolts can be seen through the service holes.

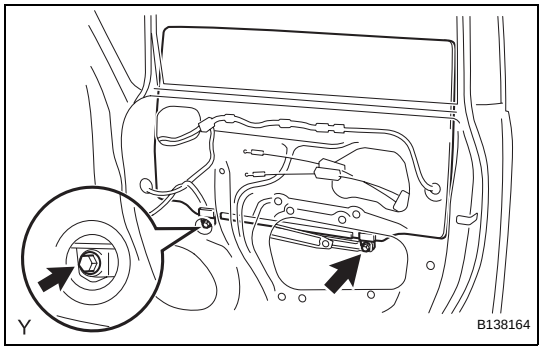

(e) Remove the 2 bolts.

(f) Pull the door glass upward to remove it.
NOTICE:
Do not damage the glass.

(g) Driver side:
Remove the power window regulator master switch.

(h) Passenger side:
Remove the power window regulator switch.

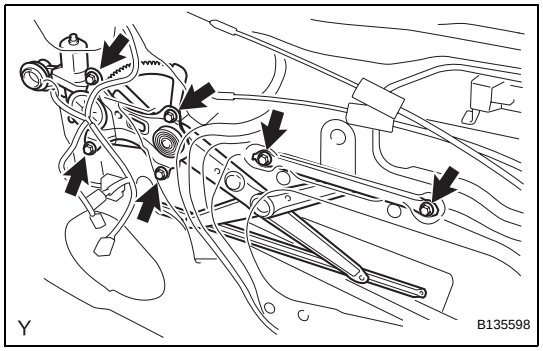

20. REMOVE FRONT DOOR WINDOW REGULATOR SUB-ASSEMBLY

(a) Disconnect the connector.

(b) Remove the 6 bolts, then remove the front door window regulator.
NOTICE:
Do not drop or damage the front door window regulator.
HINT:
Remove the window regulator through the service hole.

21. REMOVE POWER WINDOW REGULATOR MOTOR ASSEMBLY (See page WS-35)

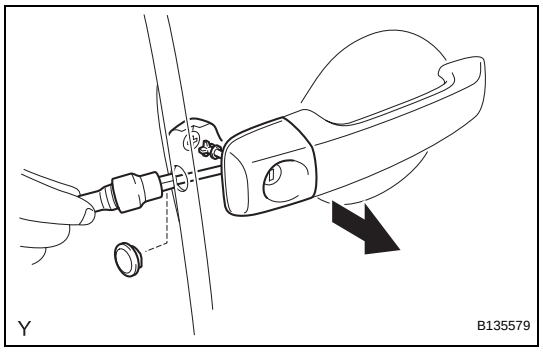

22. REMOVE FRONT DOOR OUTSIDE HANDLE COVER

(a) Remove the hole plug.

(b) Using "Torx" socket wrench T30, loosen the screw and remove the cover with the door lock key cylinder installed.

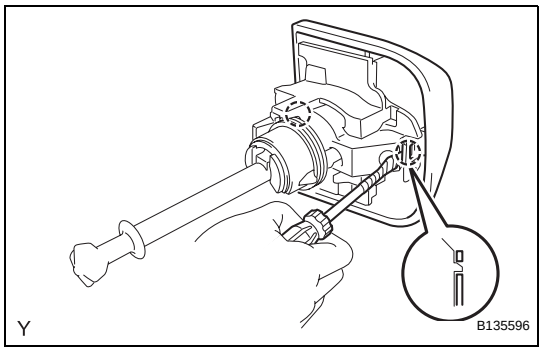

(c) Using a screwdriver with its tip wrapped in protective tape, disengage the 2 claws and remove the front door outside handle cover.

23. REMOVE FRONT DOOR LOCK (See page DL-109)

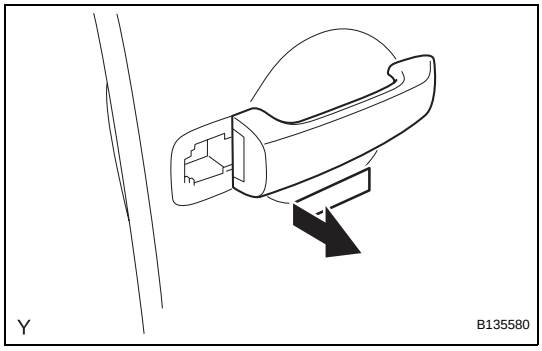

24. REMOVE FRONT DOOR OUTSIDE HANDLE ASSEMBLY

(a) Remove the handle by sliding and pulling it in the direction indicated by the arrow mark in the illustration.

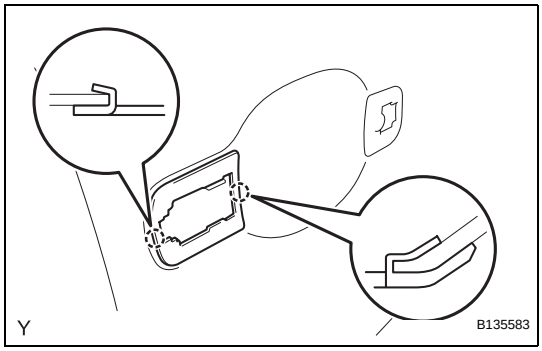

25. REMOVE FRONT DOOR OUTSIDE HANDLE REAR PAD

(a) Disengage the 2 claws and remove the front door outside handle rear pad.

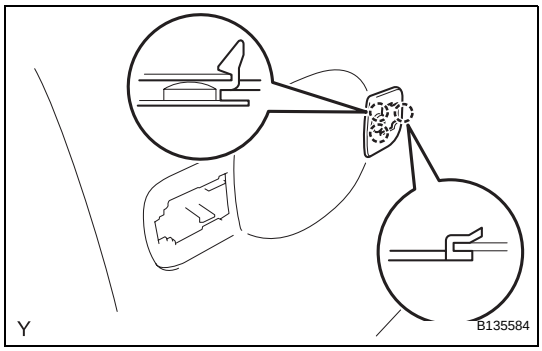

26. REMOVE FRONT DOOR OUTSIDE HANDLE FRONT PAD

(a) Disengage the 3 claws and remove the front door outside handle front pad.

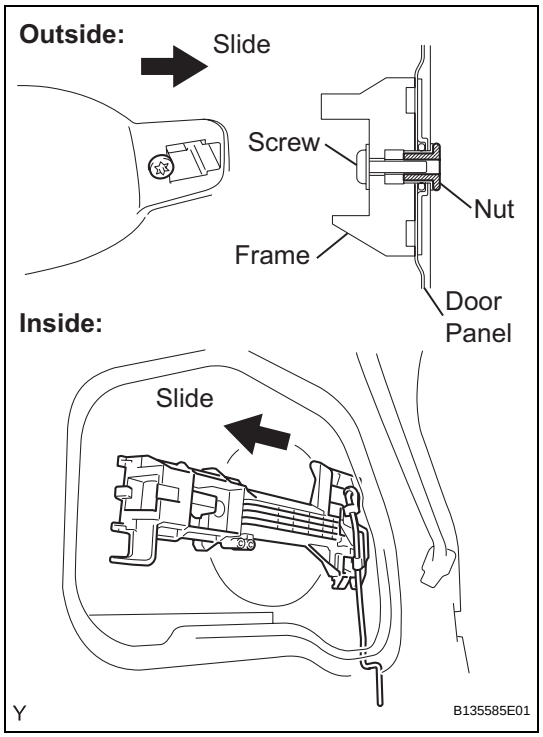

27. **REMOVE FRONT DOOR OUTSIDE HANDLE FRAME SUB-ASSEMBLY**
    (a) Using "Torx" socket wrench T30, loosen the screw.
    (b) Slide the front door outside handle frame to remove it.
    HINT:
    Remove the front door outside handle frame through the service hole.

28. **REMOVE FRONT DOOR OUTSIDE MOULDING SUB-ASSEMBLY**
    HINT:
    Use the same procedure as for the LH side (see page ET-69).

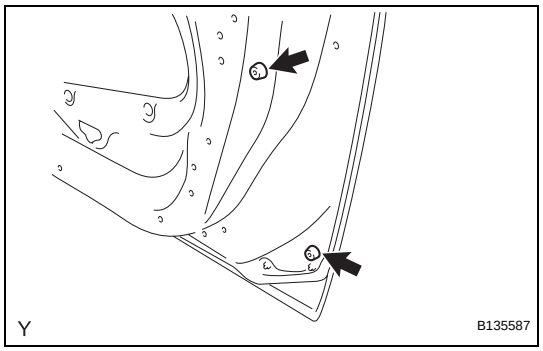

29. **REMOVE CUSHION**
    (a) Remove the 2 cushions.

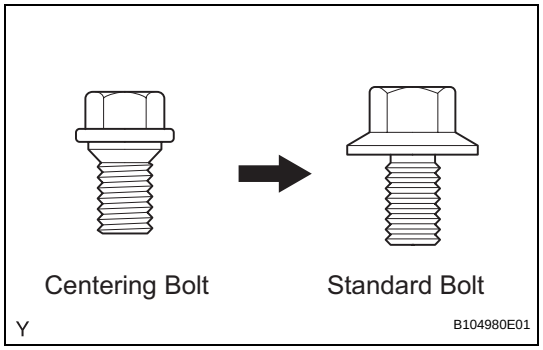

ADJUSTMENT

HINT:

- Before adjusting the door position on vehicles equipped with side airbags and curtain shield airbags, be sure to disconnect the battery. After the adjustment, inspect the SRS warning light, the side airbag system and the curtain shield airbag system for normal operation. Then initialize both airbag systems.
- Use the same procedure for the RH and LH sides.
- The procedures described below are for the RH side.
- Centering bolts are used to mount the door hinge onto the vehicle body and door. The door cannot be adjusted with the centering bolts on. Substitute standard bolts (with washers) for the centering bolts when making adjustments.
- For bolts without torque specifications, check the standard bolt chart (see page SS-2).

1. INSPECT FRONT DOOR

(a) Check that the clearance measurements are within the standard ranges.

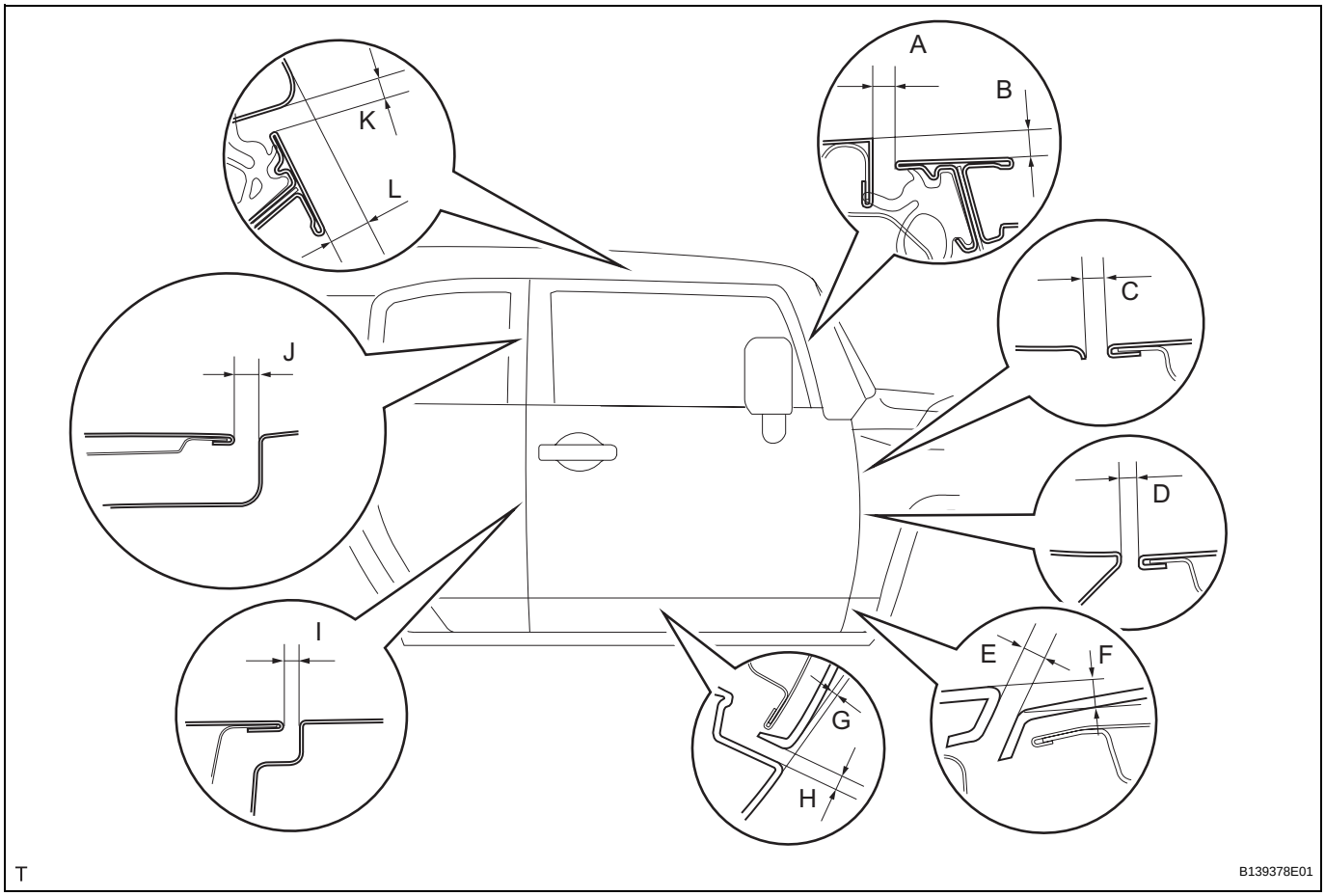

Standard

Area	Measurement	Area	Measurement
A	4.1 to 7.1 mm (0.161 to 0.280 in.)	G	1.1 to 4.1 mm (0.043 to 0.161 in.)
B	4.4 to 7.4 mm (0.173 to 0.291 in.)	H	4.3 to 7.3 mm (0.169 to 0.287 in.)
C	4 to 7 mm (0.157 to 0.276 in.)	I	3.5 to 6.5 mm (0.138 to 0.256 in.)
D	4 to 7 mm (0.157 to 0.276 in.)	J	4.6 to 7.6 mm (0.181 to 0.299 in.)
E	5.2 to 8.2 mm (0.205 to 0.323 in.)	K	4.2 to 7.2 mm (0.165 to 0.283 in.)
F	5.9 to 8.9 mm (0.232 to 0.350 in.)	L	9 to 12 mm (0.354 to 0.472 in.)

2. ADJUST FRONT DOOR

(a) Disconnect the cable from the negative battery terminal.
CAUTION:
The work must be started at least 90 seconds after the ignition switch is turned to OFF and the cable is disconnected from the negative battery terminal. (The SRS is equipped with a back-up power source. If the work is started within 90 seconds of disconnecting the cable from the negative battery terminal and the ignition switch being turned to OFF, the SRS may deploy).

(b) Apply strips of protective tape to the door panel and fender panel, as shown in the illustration.

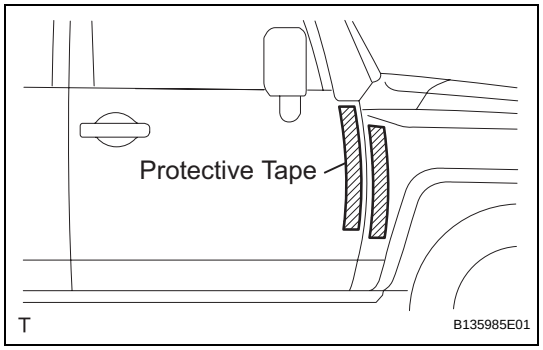

(c) Open the door, and then disengage the 5 clips.
HINT:
If any clips are damaged, replace them with new ones.

(d) Remove the front fender splash shield from the gap between the fender and door.

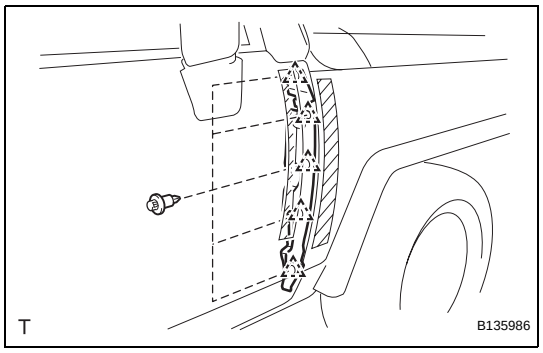

(e) Using SST, adjust the door horizontally and vertically by loosening the body side hinge bolts.
SST 09812-00010

(f) Tighten the body side hinge bolts after the adjustment.
Torque: 26 N*m (265 kgf*cm, 19 ft.*lbf)

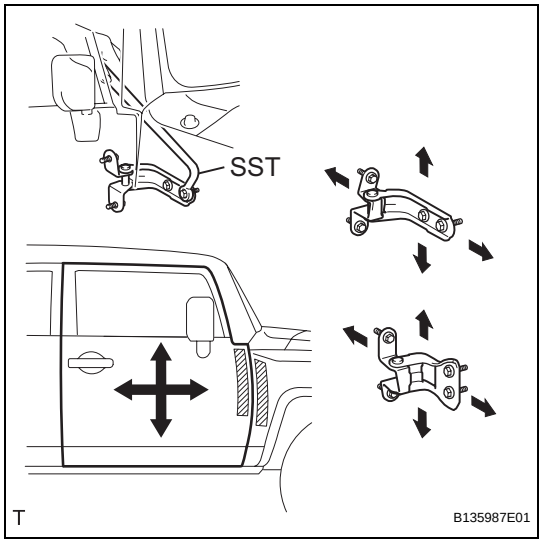

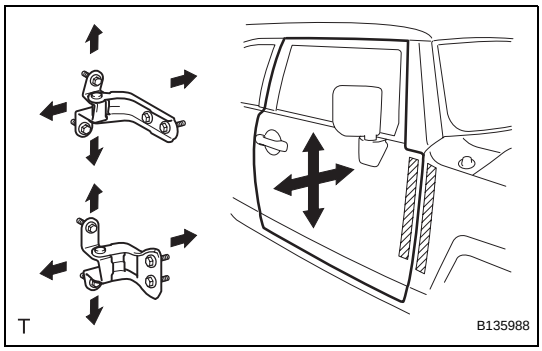

(g) Adjust the door horizontally and vertically by loosening the door side hinge bolts.
(h) Tighten the door side hinge bolts after the adjustment.
Torque: 26 N*m (265 kgf*cm, 19 ft.*lbf)

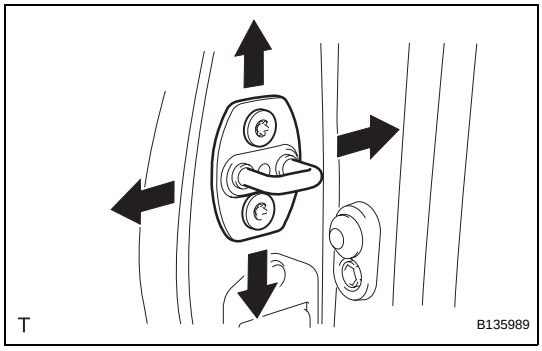

(i) Using "Torx" socket wrench T40, adjust the striker position by slightly loosening the striker mounting screws and hitting the striker with a plastic-faced hammer.
(j) Using "Torx" socket wrench T40, tighten the striker mounting screws after the adjustment.
Torque: 23 N*m (235 kgf*cm, 17 ft.*lbf)

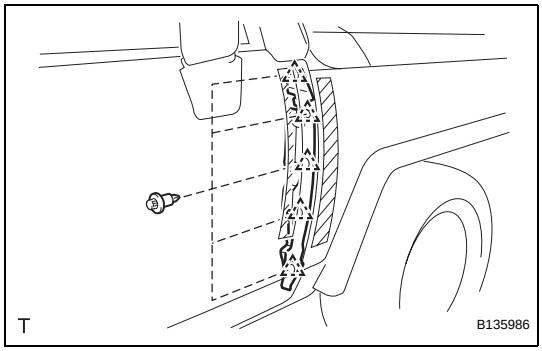

(k) Install the front fender splash shield with the 5 clips.
(l) Connect the cable to the negative battery terminal.
Torque: 3.9 N*m (40 kgf*cm, 35 in.*lbf)

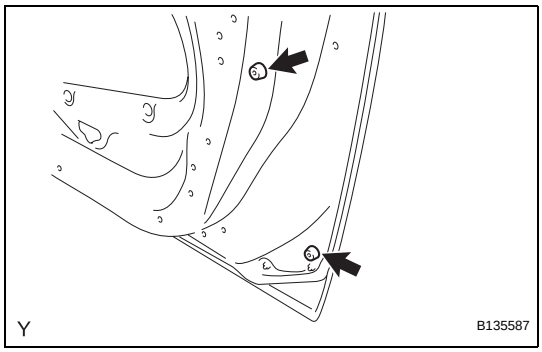

REASSEMBLY

1. INSTALL CUSHION
(a) Install the 2 cushions.

2. INSTALL FRONT DOOR OUTSIDE MOULDING SUB-ASSEMBLY
HINT:
Use the same procedure as for the LH side (see page ET-75).

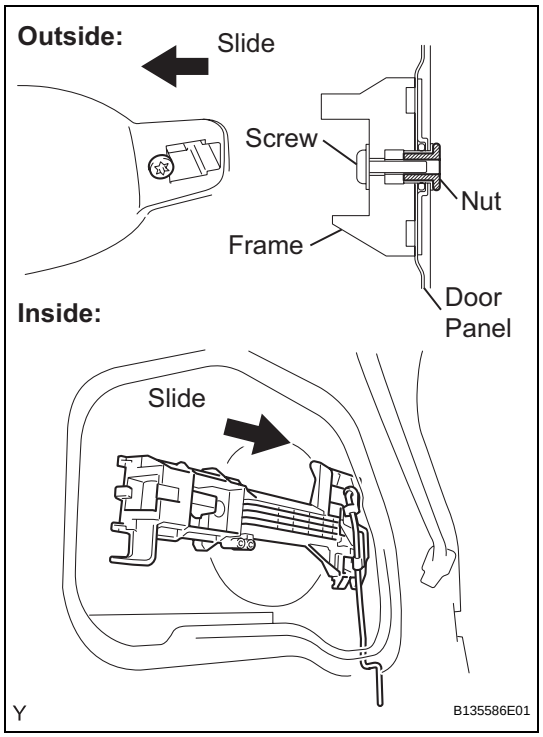

3. INSTALL FRONT DOOR OUTSIDE HANDLE FRAME SUB-ASSEMBLY

(a) Using "Torx" socket wrench T30, install the front door outside handle frame with the screw.
Torque: 7.0 N*m (71 kgf*cm, 62 in.*lbf)
NOTICE:
A cover should be inserted between the nut and the door panel.

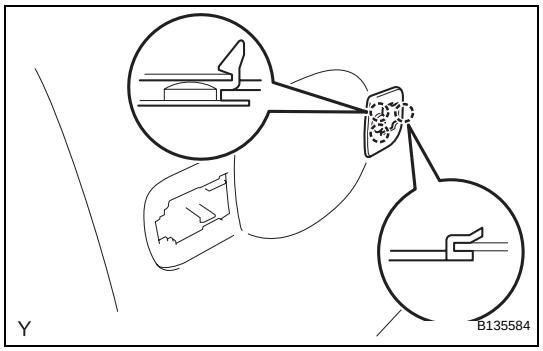

4. INSTALL FRONT DOOR OUTSIDE HANDLE FRONT PAD

(a) Engage the 3 claws and install the front door outside handle front pad.

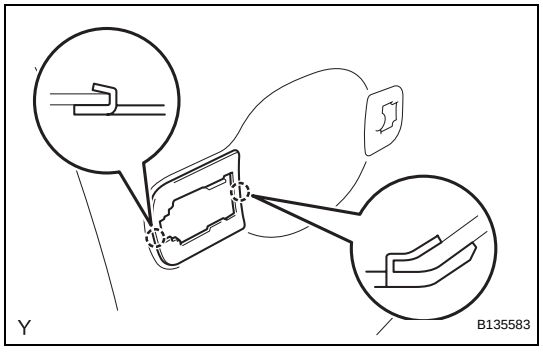

5. INSTALL FRONT DOOR OUTSIDE HANDLE REAR PAD

(a) Engage the 2 claws and install the front door outside handle rear pad.

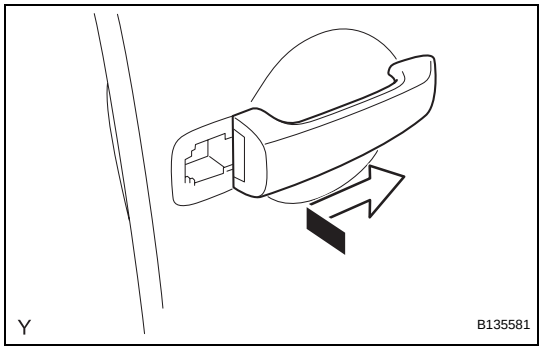

6. INSTALL FRONT DOOR OUTSIDE HANDLE ASSEMBLY

(a) While pushing the front door outside handle in the direction of the arrow mark shown in the illustration, install the front door outside handle.

7. INSTALL FRONT DOOR LOCK (See page DL-112)

ED

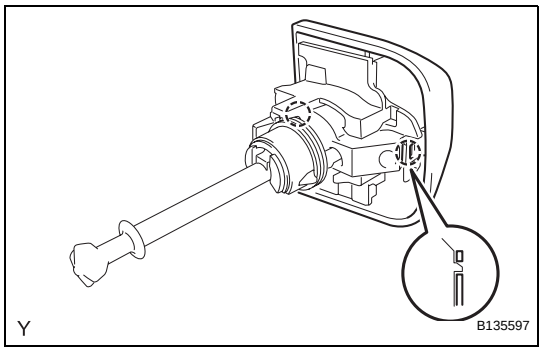

8. INSTALL FRONT DOOR OUTSIDE HANDLE COVER

(a) Engage the 2 claws and install the front door outside handle cover.

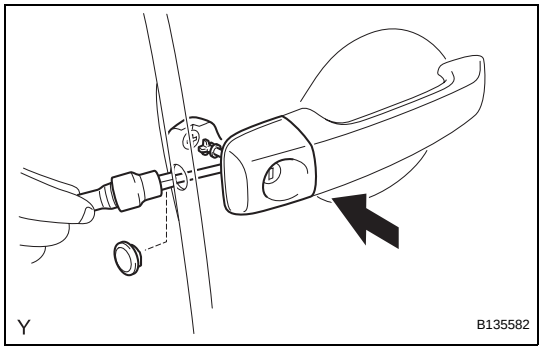

(b) Using "Torx" socket wrench T30, install the cover with the door lock key cylinder.
Torque: 5.5 N*m (56 kgf*cm, 49 in.*lbf)
HINT:
Make sure that the door lock key cylinder rod is inserted.

(c) Install the hole plug.

9. INSTALL POWER WINDOW REGULATOR MOTOR ASSEMBLY (See page WS-35)

10. INSTALL FRONT DOOR WINDOW REGULATOR SUB-ASSEMBLY

(a) Apply MP grease to the sliding and rotating areas of the front door window regulator.
NOTICE:
Do not apply grease to the window regulator spring.

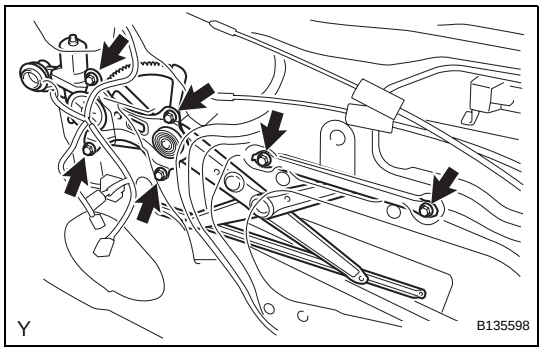

(b) Install the front door window regulator with the 6 bolts.
Torque: 8.0 N*m (82 kgf*cm, 71 in.*lbf)
NOTICE:
Do not drop the window regulator as it may be damaged.

(c) Connect the connector.

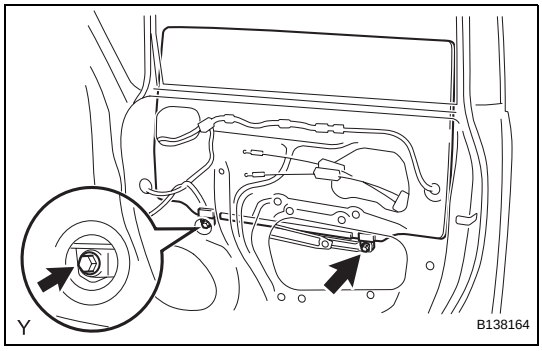

11. INSTALL FRONT DOOR GLASS SUB-ASSEMBLY

(a) Install the front door glass onto the front door window regulator with the 2 bolts.
Torque: 8.0 N*m (82 kgf*cm, 71 in.*lbf)
NOTICE:
Do not damage the glass.

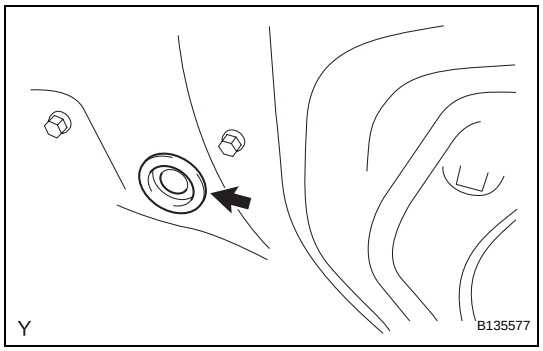

(b) Install the hole plug.

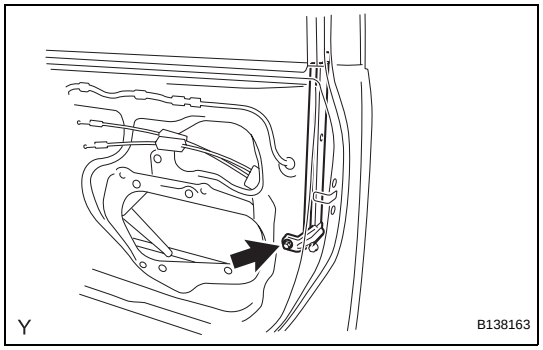

12. INSTALL FRONT DOOR WINDOW FRAME REAR LOWER

(a) Install the front door window frame rear lower, and temporarily tighten the bolt.

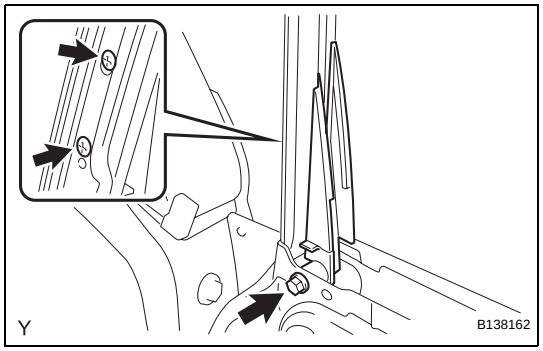

13. INSTALL FRONT DOOR LOWER FRAME BRACKET GARNISH

(a) Install the front door lower frame bracket garnish with the bolt and 2 screws.
Torque: 5.5 N*m (56 kgf*cm, 49 in.*lbf)

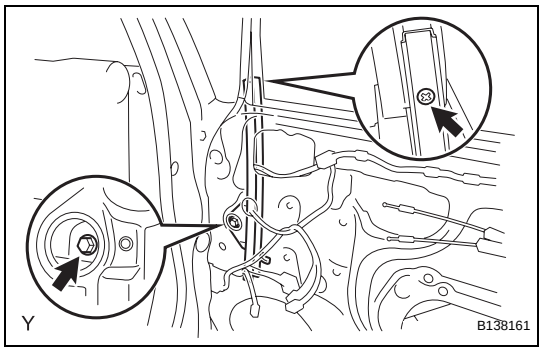

14. INSTALL FRONT DOOR FRAME SUB-ASSEMBLY FRONT LOWER

(a) Install the front door frame sub-assembly front lower with the screw.

(b) Temporarily tighten the bolt.

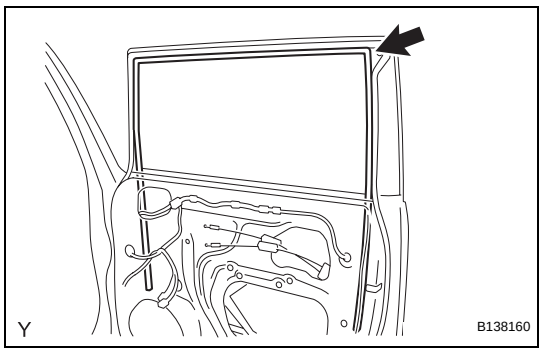

15. INSTALL FRONT DOOR GLASS RUN

(a) Install the front door glass run.

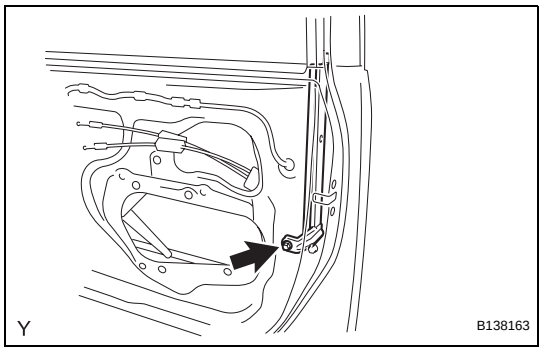

(b) Tighten the front door window frame rear lower to the specified torque with the bolt.
Torque: 5.5 N*m (56 kgf*cm, 49 in.*lbf)

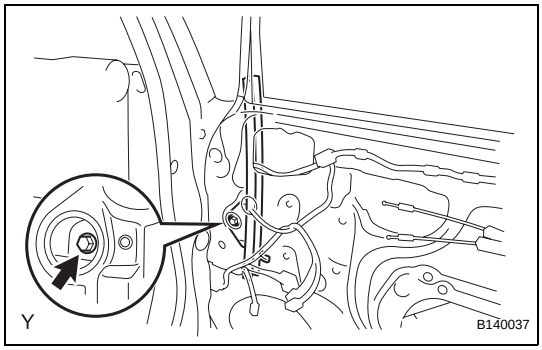

(c) Tighten the front door frame sub-assembly front lower to the specified torque with the bolt.
Torque: 5.5 N*m (56 kgf*cm, 49 in.*lbf)

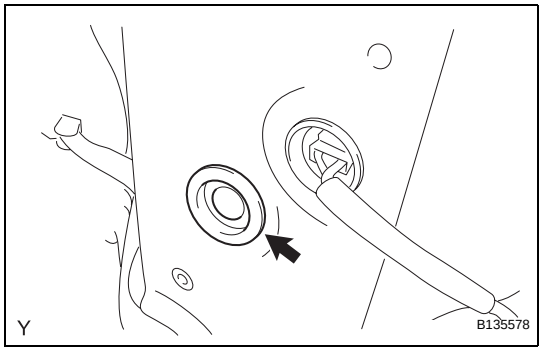

(d) Install the hole plug.

16. INSTALL FRONT DOOR WEATHERSTRIP

(a) Install the front door weatherstrip.

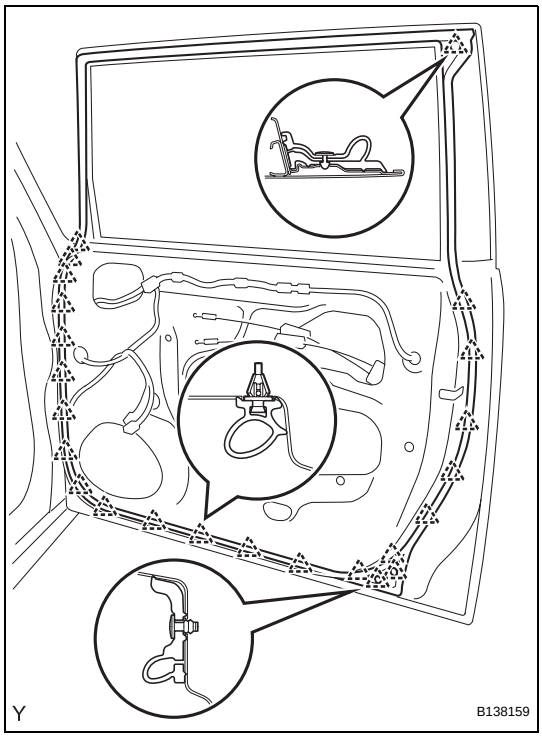

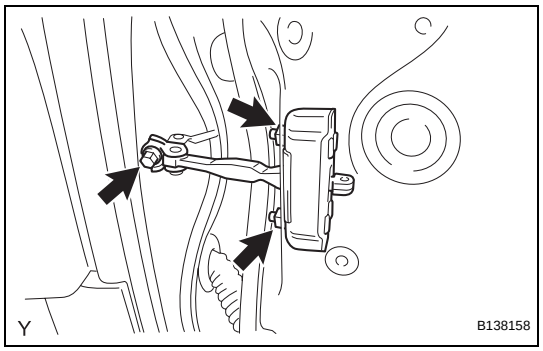

17. INSTALL FRONT DOOR CHECK ASSEMBLY

(a) Apply MP grease to the sliding areas of the door check.

(b) Install the front door check onto the door panel with the 2 nuts.
Torque: 5.5 N*m (56 kgf*cm, 49 in.*lbf)

(c) Apply adhesive to the threads of the bolt.
Adhesive:
Toyota Genuine Adhesive 1324, Three Bond 1324 or the equivalent.

(d) Install the front door check onto the body panel with the bolt.
Torque: 30 N*m (306 kgf*cm, 22 ft.*lbf)

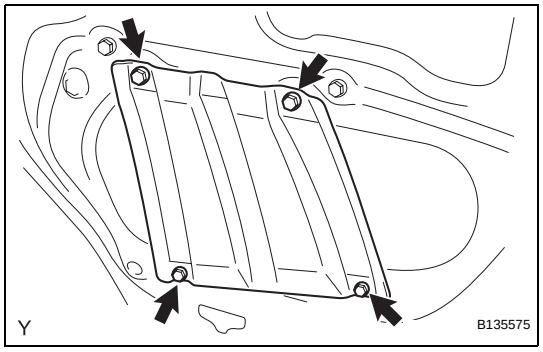

18. INSTALL FRONT DOOR INSIDE PANEL PLATE

(a) Install the front door inside panel plate with the 4 screws.

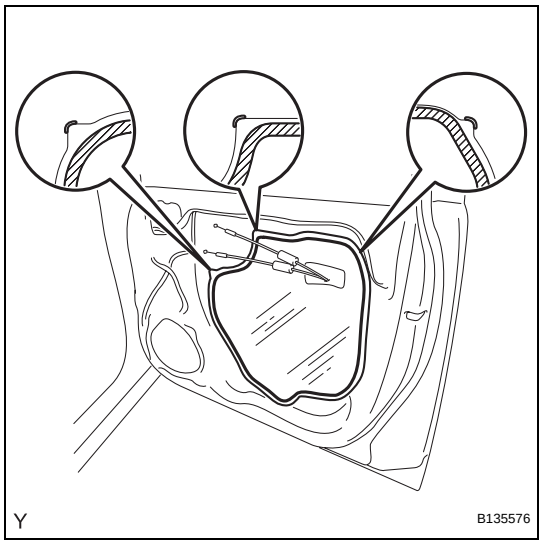

19. INSTALL FRONT DOOR SERVICE HOLE COVER

(a) Apply butyl tape to the door panel, then install the new front door service hole cover as shown in the illustration.
HINT:
- When installing the service hole cover, pull the links out through service hole.
- There should be no wrinkles or folds after attaching the service hole cover.
- After attaching the service hole cover, check the quality of the seal.

20. INSTALL FRONT NO. 1 SPEAKER (See page AV-59)

21. INSTALL FRONT DOOR GLASS OUTER WEATHERSTRIP ASSEMBLY
HINT:
Use the same procedure as for the LH side (see page ET-40).

22. INSTALL OUTER REAR VIEW MIRROR
HINT:
Use the same procedure as for the LH side (see page MI-11).

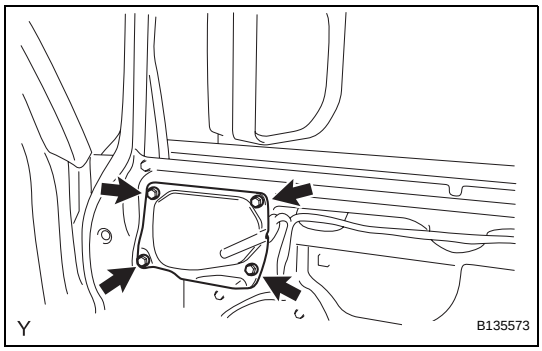

23. INSTALL FRONT NO. 2 DOOR SERVICE HOLE COVER

(a) Install the front No. 2 door service hole cover with the 4 screws.

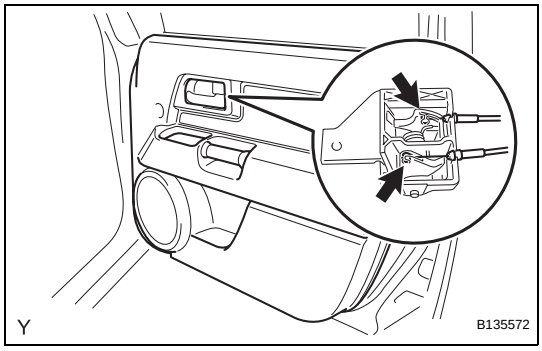

24. INSTALL FRONT DOOR TRIM BOARD SUB-ASSEMBLY

(a) Connect the front door lock remote control cable and front door inside locking cable.

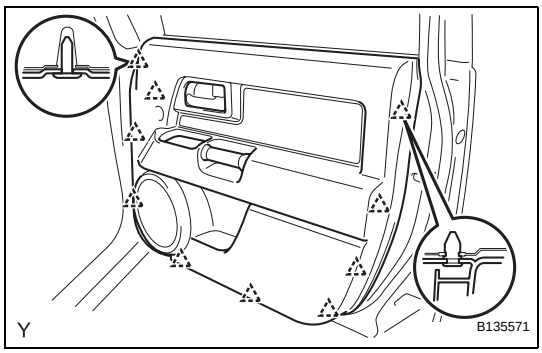

(b) Engage the 10 clips and install the front door trim board.

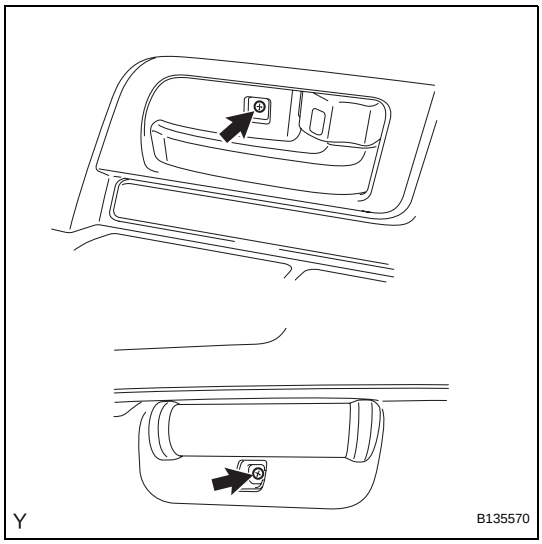

(c) Tighten the 2 screws.

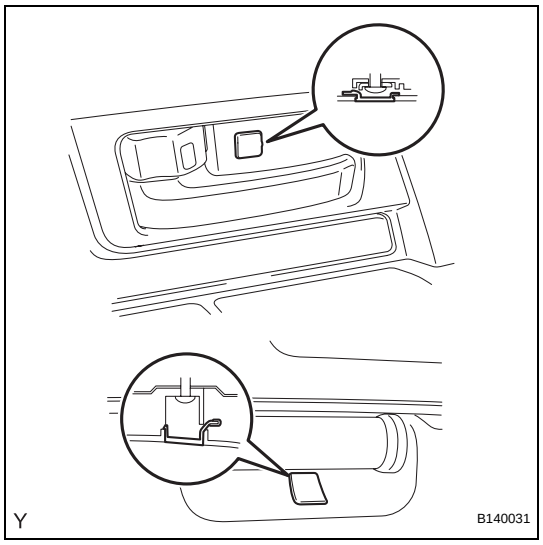

(d) for LH side:
Close the 2 covers.

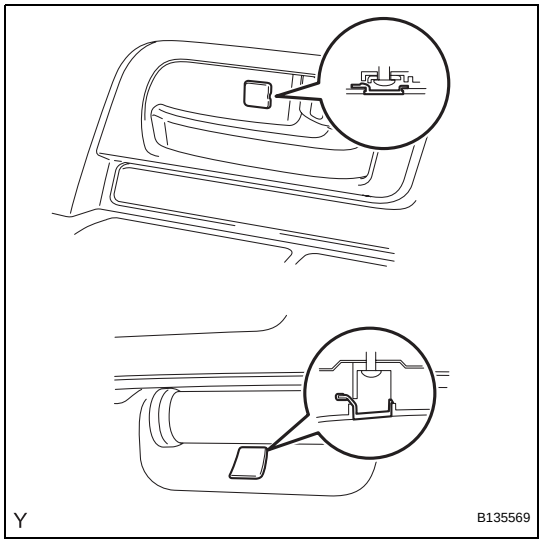

(e) for RH side:
Close the 2 covers.

25. INSTALL POWER WINDOW REGULATOR MASTER SWITCH ASSEMBLY (for Driver Side) (See page WS-26)

26. INSTALL POWER WINDOW REGULATOR SWITCH ASSEMBLY (for Front Passenger Side) (See page WS-29)

27. INSTALL DOOR CONTROL SWITCH (for Front Passenger Side) (See page DL-93)

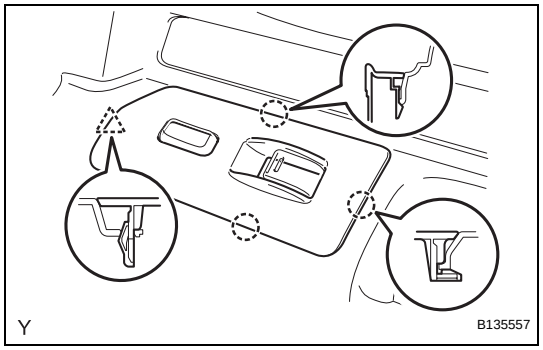

28. INSTALL FRONT ARMREST BASE UPPER PANEL
(a) Connect the connector.
(b) Engage the 3 claws and clip and install the front armrest base upper panel.

29. CONNECT CABLE TO NEGATIVE BATTERY TERMINAL
Torque: 3.9 N*m (40 kgf*cm, 35 in.*lbf)

ACCESS DOOR

COMPONENTS

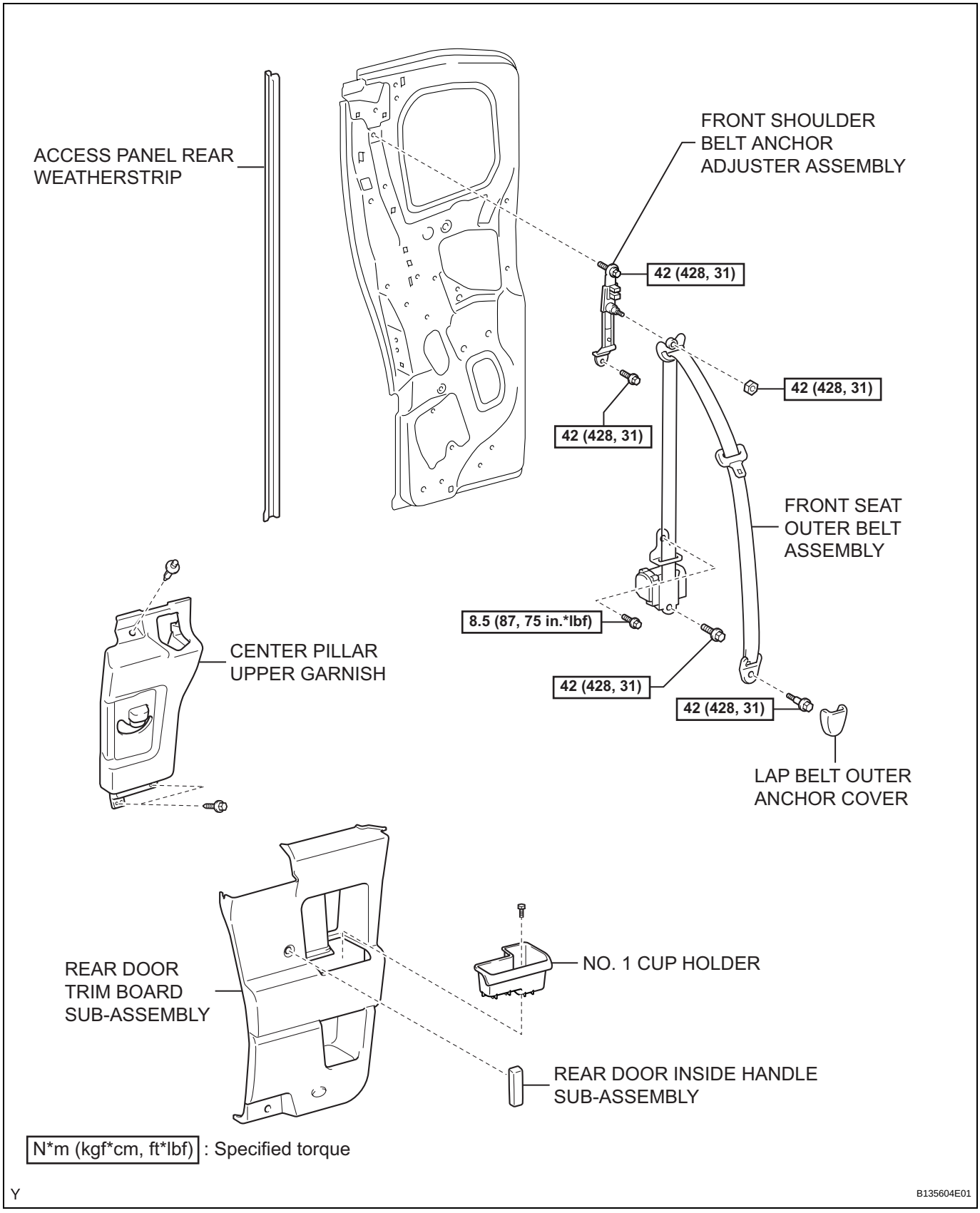

ED

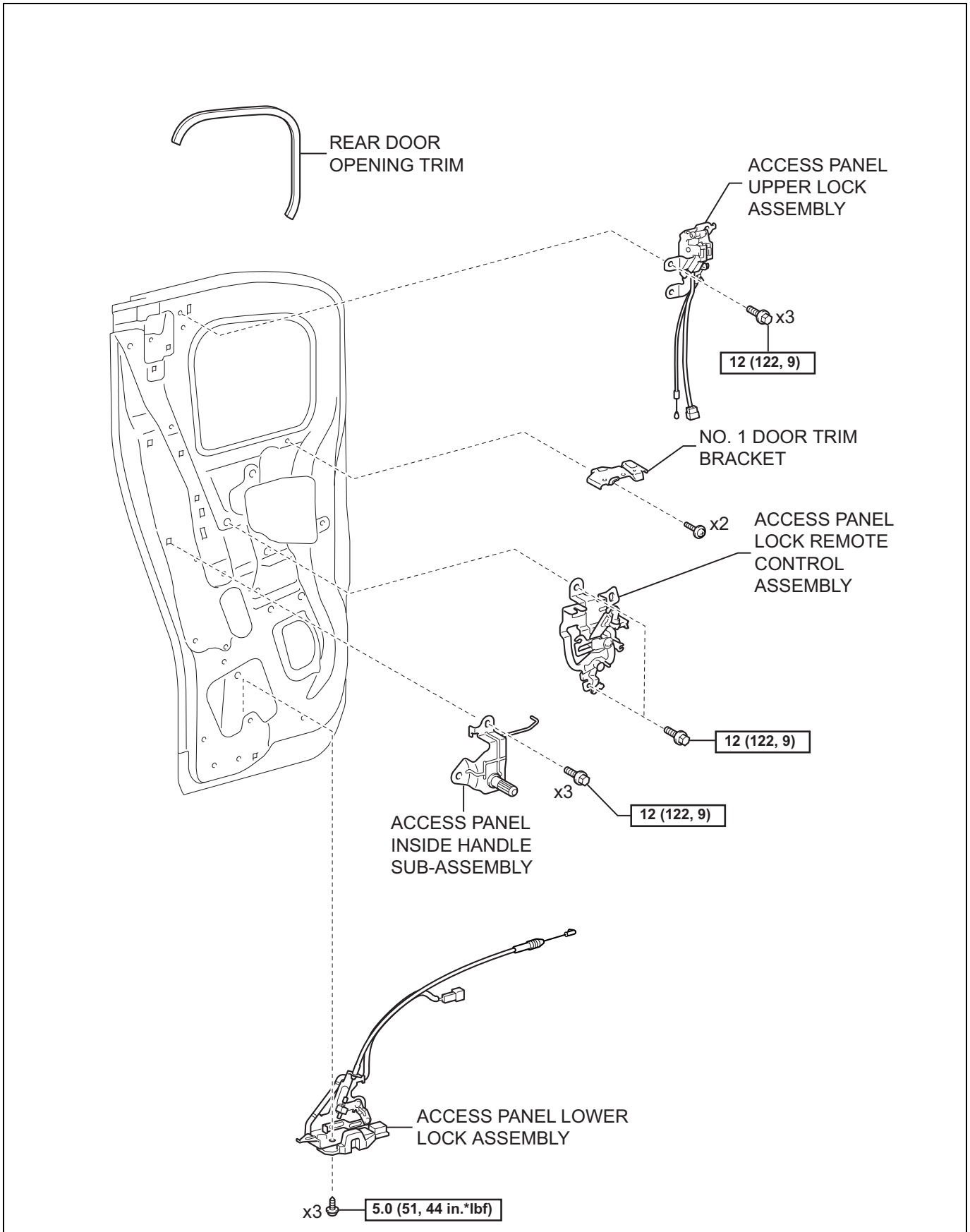

N*m (kgf*cm, ft*lbf) : Specified torque

Y

B129023E01

ED

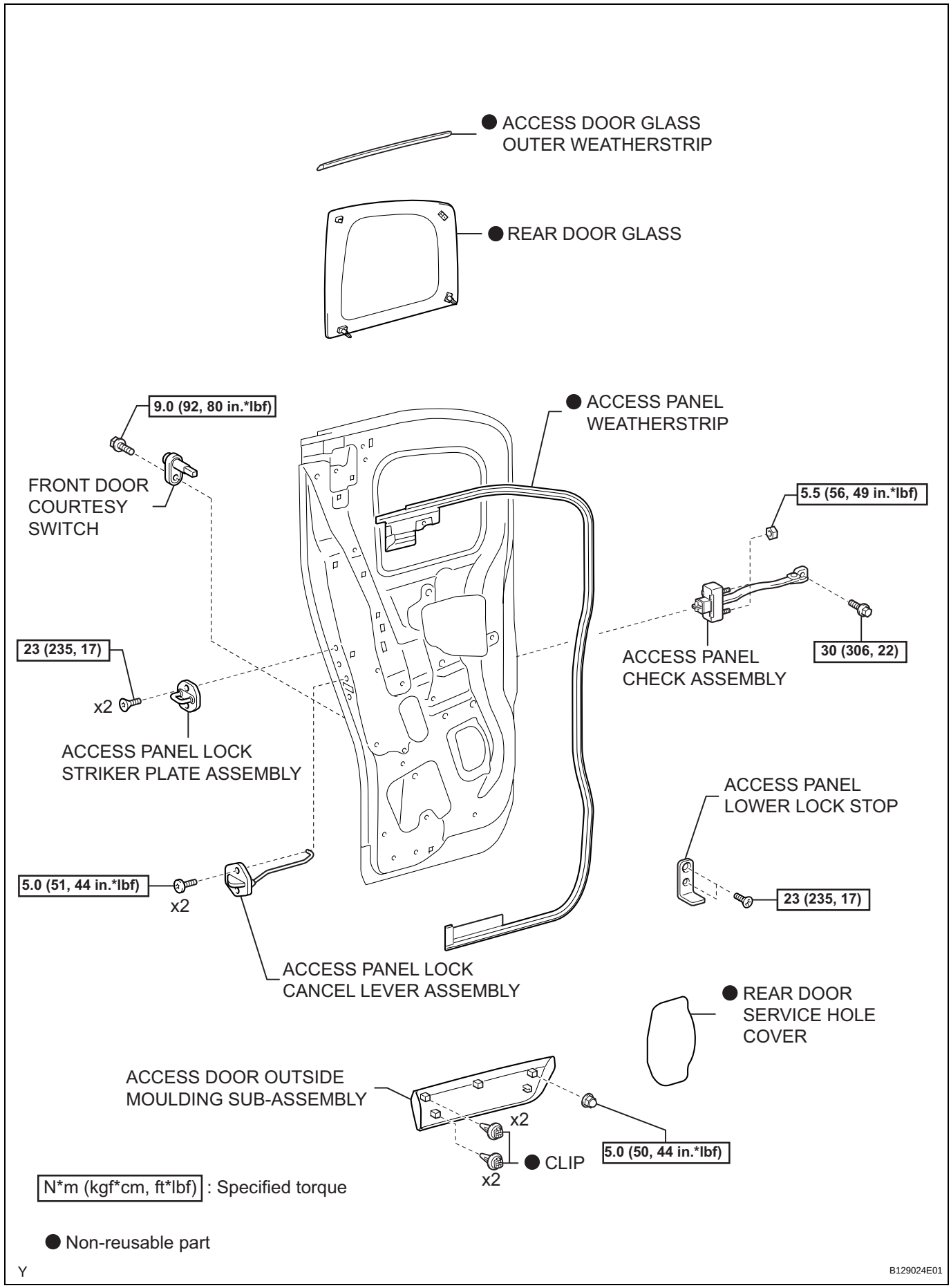
● ACCESS DOOR GLASS OUTER WEATHERSTRIP
● REAR DOOR GLASS
9.0 (92, 80 in.*lbf)
FRONT DOOR COURTESY SWITCH
● ACCESS PANEL WEATHERSTRIP
5.5 (56, 49 in.*lbf)
ACCESS PANEL CHECK ASSEMBLY
30 (306, 22)
23 (235, 17)
x2
ACCESS PANEL LOCK STRIKER PLATE ASSEMBLY
ACCESS PANEL LOWER LOCK STOP
23 (235, 17)
5.0 (51, 44 in.*lbf)
x2
ACCESS PANEL LOCK CANCEL LEVER ASSEMBLY
● REAR DOOR SERVICE HOLE COVER
ACCESS DOOR OUTSIDE MOULDING SUB-ASSEMBLY
x2
5.0 (50, 44 in.*lbf)
● CLIP
x2
N*m (kgf*cm, ft*lbf) : Specified torque
● Non-reusable part
Y
B129024E01

ED

DISASSEMBLY

HINT:
- Use the same procedure for both RH and LH sides.
- The procedure described below is for the RH side.

1. DISCONNECT CABLE FROM NEGATIVE BATTERY TERMINAL

2. REMOVE ACCESS PANEL REAR WEATHERSTRIP

(a) Remove the access panel rear weatherstrip.

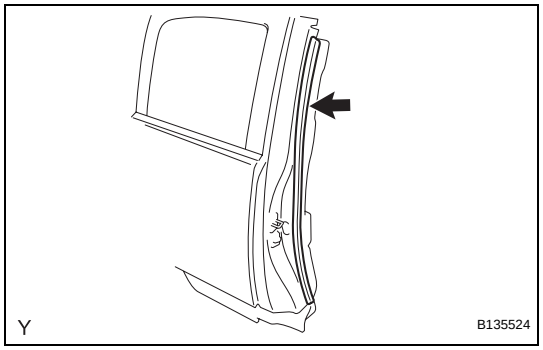

3. REMOVE LAP BELT OUTER ANCHOR COVER

(a) Disengage the 3 claws and remove the lap belt outer anchor cover.

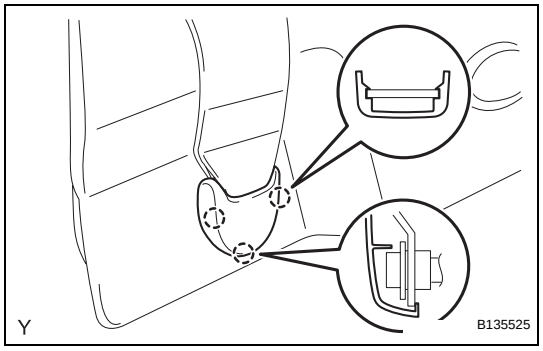

4. REMOVE REAR DOOR INSIDE HANDLE SUB-ASSEMBLY

(a) Insert a clip remover between the handle and door trim.

(b) Turn the handle with the clip remover inserted, as shown in the illustration.

(c) Remove the rear door inside handle and snap ring.

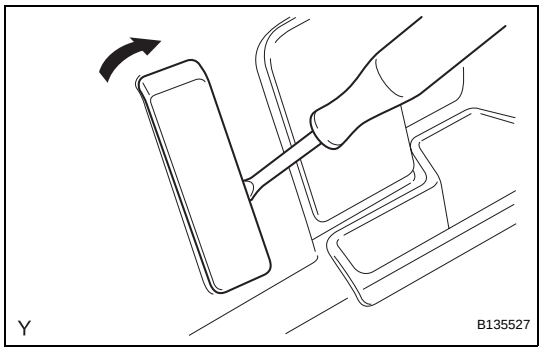

5. REMOVE NO. 1 CUP HOLDER

(a) Remove the screw and the No. 1 cup holder.

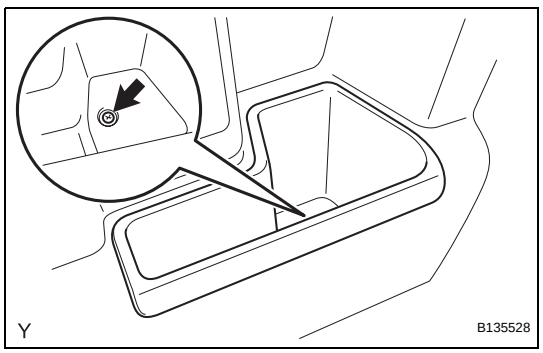

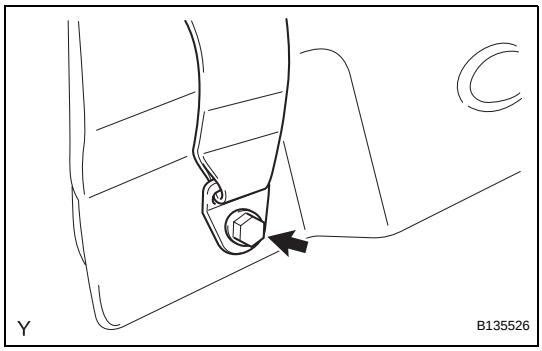

6. REMOVE REAR DOOR TRIM BOARD SUB-ASSEMBLY

(a) Remove the bolt and separate the front seat belt outer (floor side).

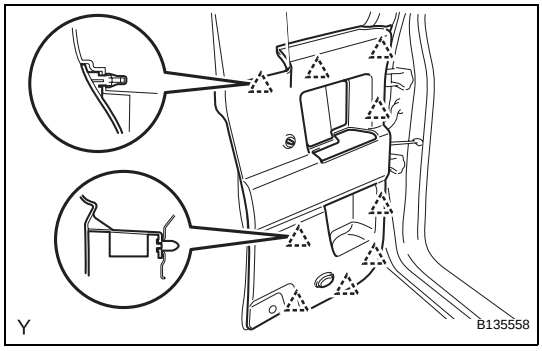

(b) Disengage the 9 clips and remove the rear door trim panel.

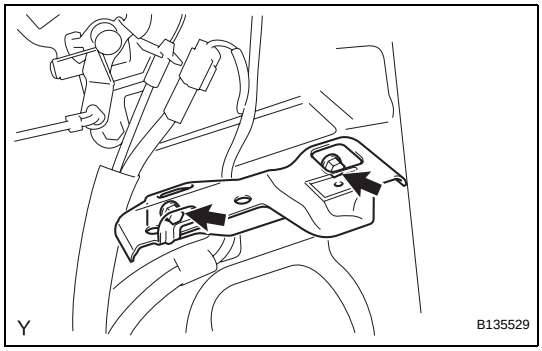

7. REMOVE NO. 1 DOOR TRIM BRACKET

(a) Remove the 2 screws and remove the No. 1 door trim bracket.

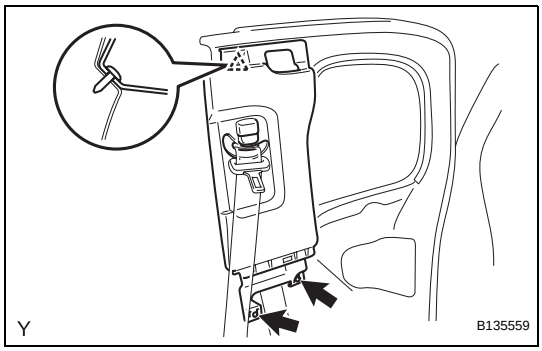

8. REMOVE CENTER PILLAR UPPER GARNISH

(a) Remove the clip.

(b) Remove the 2 screws.

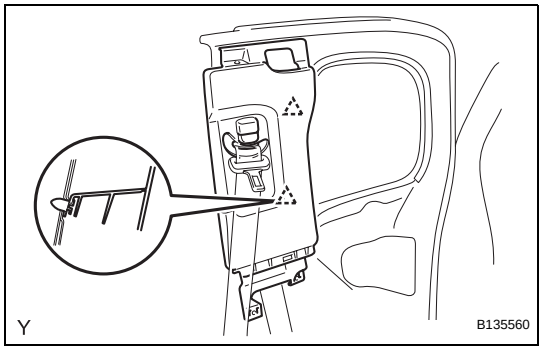

(c) Disengage the 2 clips and remove the center pillar upper garnish.

9. REMOVE FRONT SEAT OUTER BELT ASSEMBLY (See page SB-36)

10. REMOVE FRONT SHOULDER BELT ANCHOR ADJUSTER ASSEMBLY (See page SB-38)

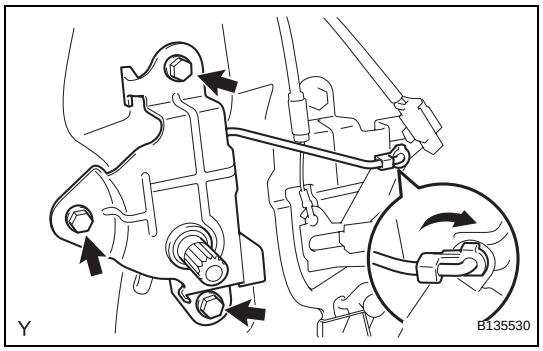

11. REMOVE ACCESS PANEL INSIDE HANDLE SUB-ASSEMBLY

(a) Disconnect the rod.

(b) Remove the 3 bolts, then remove the access panel inside handle.

12. REMOVE ACCESS PANEL UPPER LOCK ASSEMBLY (See page LI-116)

13. REMOVE ACCESS PANEL LOWER LOCK ASSEMBLY (See page LI-119)

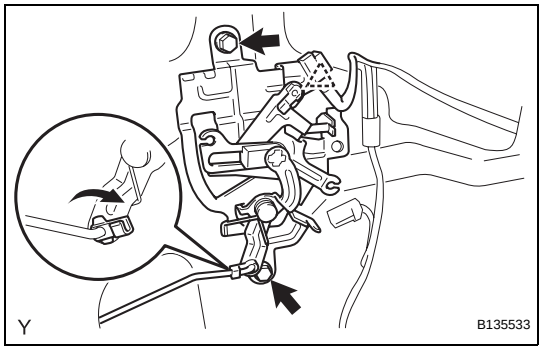

14. REMOVE ACCESS PANEL LOCK REMOTE CONTROL ASSEMBLY

(a) Disconnect the rod and connector clamp.

(b) Remove the 2 bolts, then remove the access panel lock remote control.

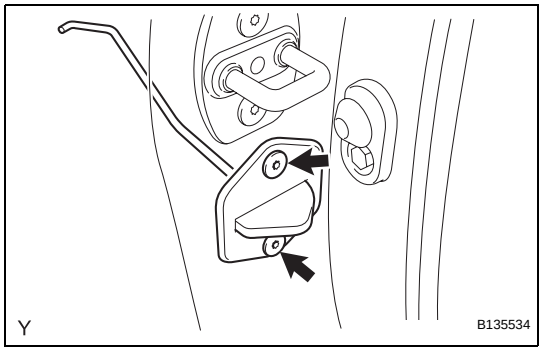

15. REMOVE ACCESS PANEL LOCK CANCEL LEVER ASSEMBLY

(a) Using "Torx" socket wrench T30, remove the 2 screws and remove the access panel lock cancel lever.

16. REMOVE FRONT DOOR COURTESY SWITCH (See page LI-114)

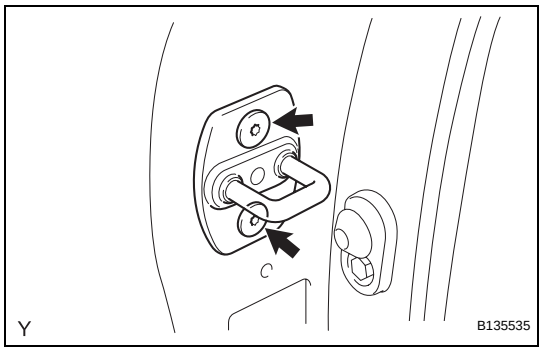

17. REMOVE ACCESS PANEL LOCK STRIKER PLATE ASSEMBLY

(a) Using "Torx" socket wrench T40, remove the 2 screws and access panel lock striker plate.

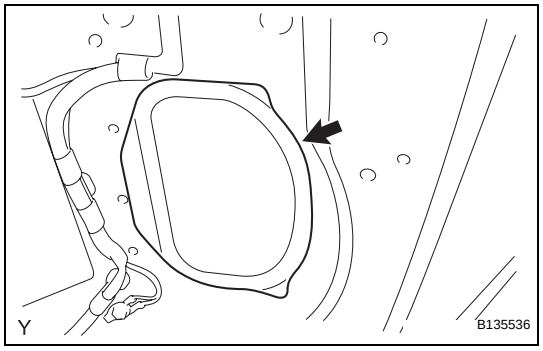

18. REMOVE REAR DOOR SERVICE HOLE COVER

(a) Remove the rear door service hole cover.

NOTICE:

Remove any tape remaining on the door side.

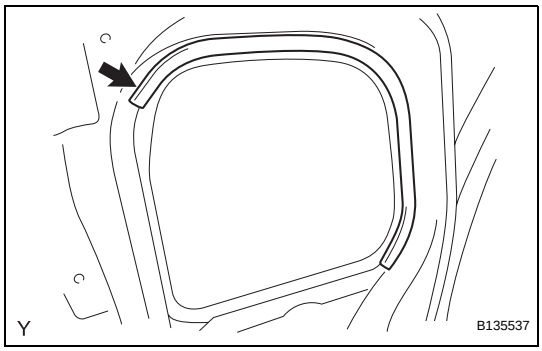

19. REMOVE REAR DOOR OPENING TRIM

(a) Remove the rear door opening trim.

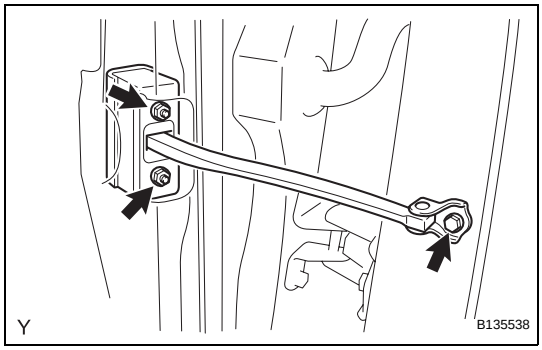

20. REMOVE ACCESS PANEL CHECK ASSEMBLY

(a) Remove the bolt and 2 nuts, then remove the access panel check.

NOTICE:

Do not drop or damage the access panel check when removing the bolt and nuts.

HINT:

Remove the access panel check through the service hole.

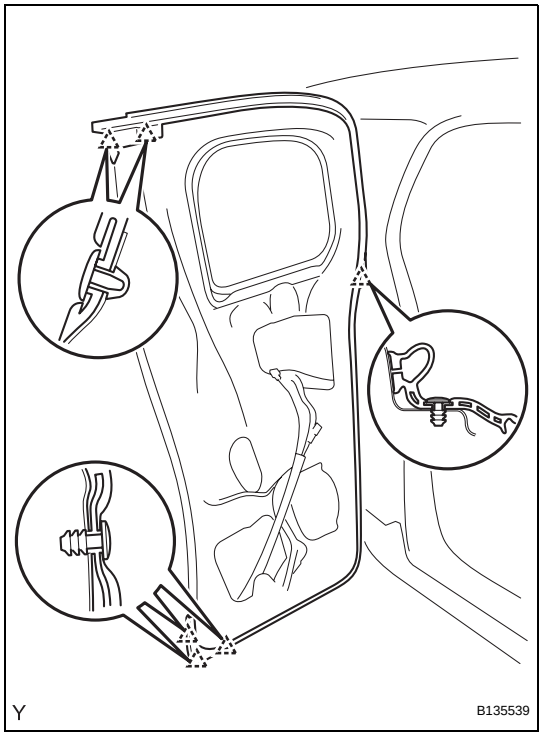

21. REMOVE ACCESS PANEL WEATHERSTRIP

(a) Disengage the 6 clips.

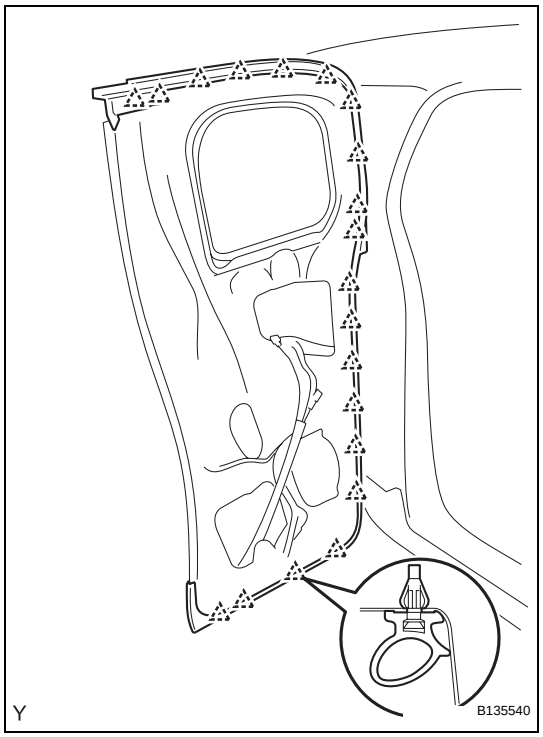

(b) Using a clip remover, disengage the 20 clips, then remove the access panel weatherstrip.
NOTICE:
Remove any tape remaining on the door side.

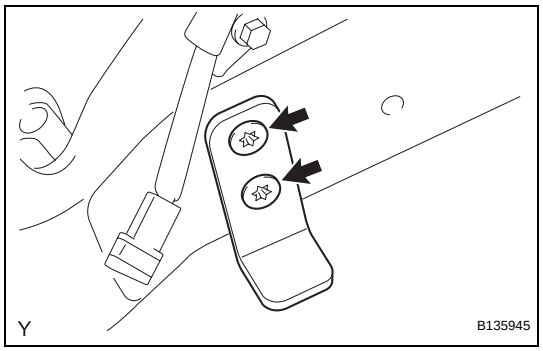

22. REMOVE ACCESS PANEL LOWER LOCK STOP
(a) Using "Torx" socket wrench T40, remove the 2 screws and access panel lower lock stop.

23. REMOVE ACCESS DOOR OUTSIDE MOULDING SUB-ASSEMBLY
HINT:
Use the same procedure as for the LH side (see page ET-70).

24. REMOVE ACCESS DOOR GLASS OUTER WEATHERSTRIP
HINT:
Use the same procedure as for the LH side (see page ET-43).

25. REMOVE REAR DOOR GLASS
HINT:
Use the same procedure as for the LH side (see page WS-58).

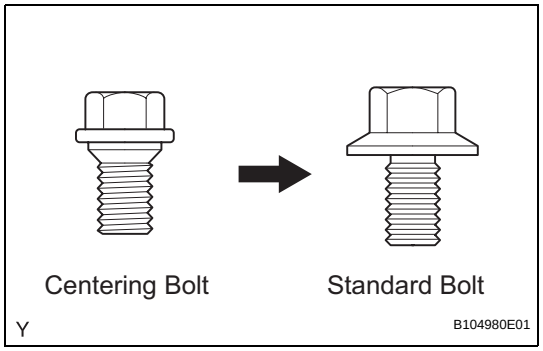

ADJUSTMENT

HINT:
- Before adjusting the door position on vehicles equipped with side airbags and curtain shield airbags, be sure to disconnect the battery. After the adjustment, inspect the SRS warning light, the side airbag system and the curtain shield airbag system for normal operation. Then initialize both airbag systems.
- Use the same procedure for the RH and LH sides.
- The procedures described below are for the RH side.

- Centering bolts are used to mount the door hinge onto the vehicle body and door. The door cannot be adjusted with the centering bolts on. Substitute standard bolts (with washers) for the centering bolts when making adjustments.
- For bolts without torque specifications, check the standard bolt chart (see page SS-2).

1. INSPECT REAR DOOR

(a) Check that the clearance measurements are within the standard ranges.

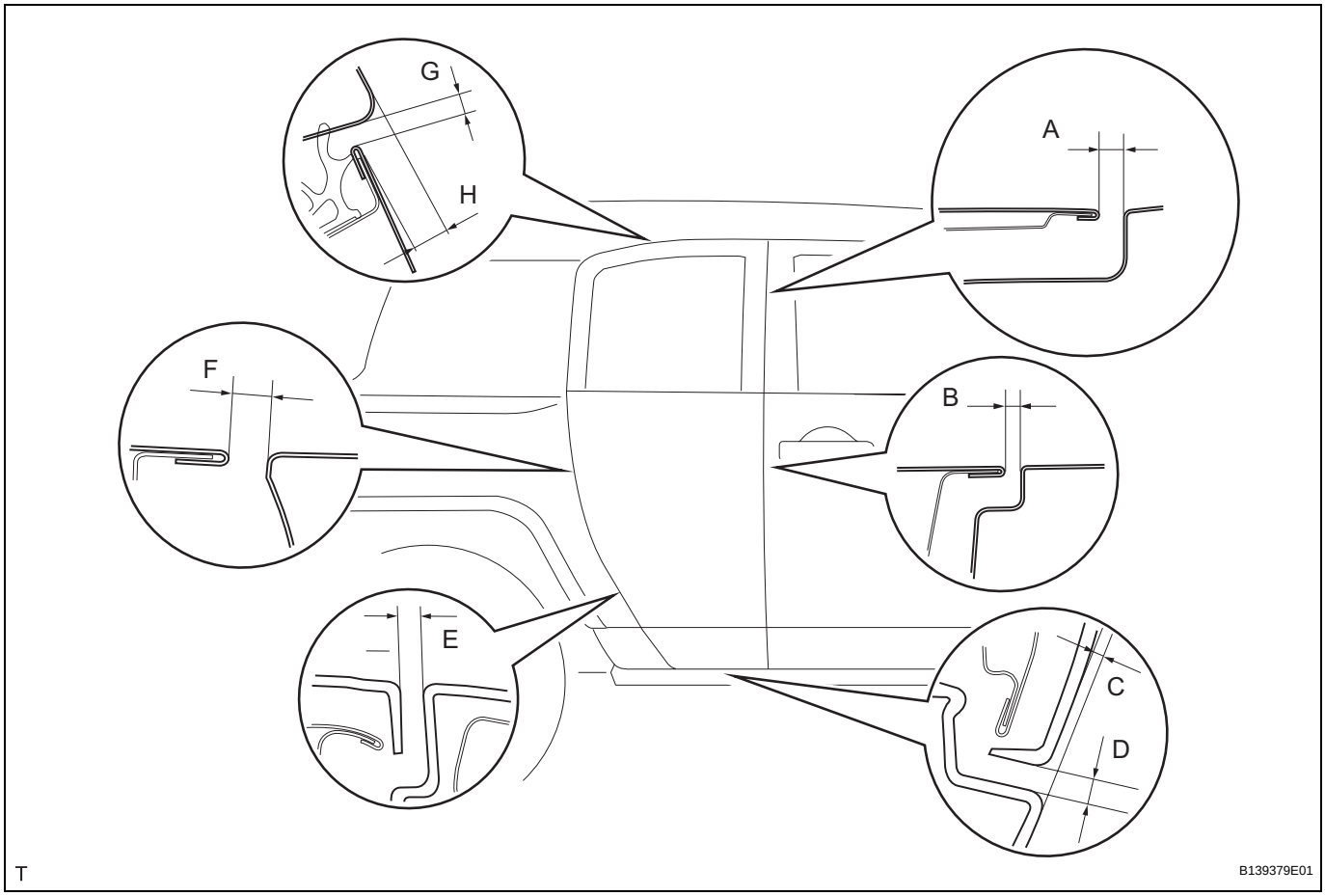

Standard

Area	Measurement	Area	Measurement
A	4.6 to 7.6 mm (0.181 to 0.299 in.)	E	4.6 to 7.6 mm (0.181 to 0.299 in.)
B	3.5 to 6.5 mm (0.138 to 0.256 in.)	F	4.5 to 7.5 mm (0.177 to 0.295 in.)
C	1.1 to 4.1 mm (0.043 to 0.161 in.)	G	4.1 to 7.1 mm (0.161 to 0.280 in.)
D	4.3 to 7.3 mm (0.169 to 0.287 in.)	H	9 to 12 mm (0.354 to 0.472 in.)

2. ADJUST REAR DOOR

(a) Disconnect the cable from the negative battery terminal.
CAUTION:
The work must be started at least 90 seconds after the ignition switch is turned to OFF and the cable is disconnected from the negative battery terminal. (The SRS is equipped with a back-up power source. If the work is started within 90 seconds of disconnecting the cable from the negative battery terminal and the ignition switch being turned to OFF, the SRS may deploy).

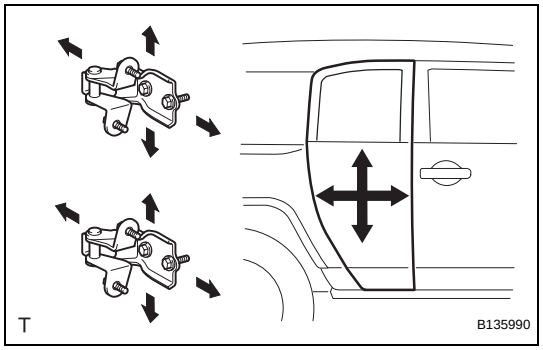

(b) Loosen the body side hinge bolts and adjust the door position.
(c) Tighten the body side hinge bolts after the adjustment.
Torque: 26 N*m (265 kgf*cm, 19 ft.*lbf)

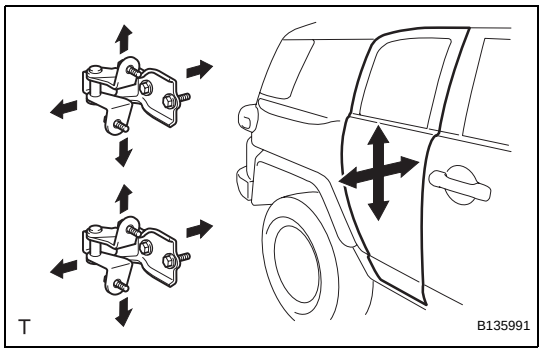

(d) Loosen the door side hinge bolts and adjust the door position.
(e) Tighten the door side hinge bolts after the adjustment.
Torque: 26 N*m (265 kgf*cm, 19 ft.*lbf)

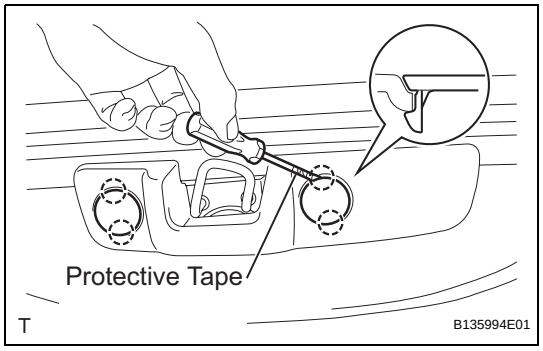

(f) Using a screwdriver with its tip wrapped in protective tape, disengage the 2 claws and remove the 2 roof side inner garnish covers.

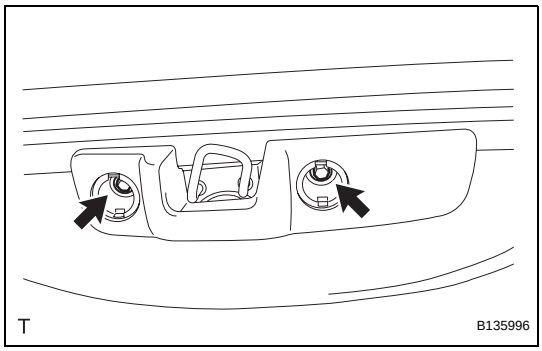

(g) Remove the 2 bolts.

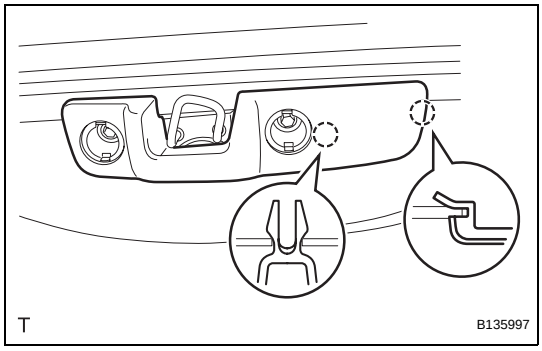

(h) Disengage the 2 claws and remove the No. 1 roof side rail garnish.

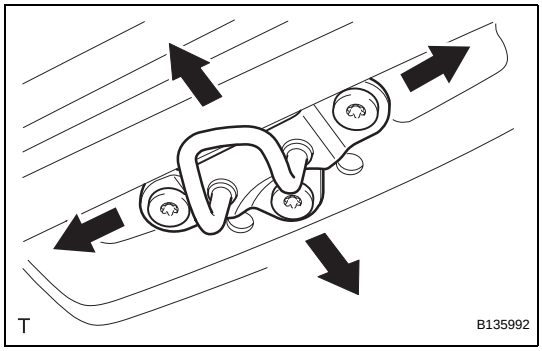

(i) Adjust the striker position by slightly loosening the striker mounting screws with "Torx" socket wrench T40 and hitting the striker with a plastic hammer (upper side).
(j) Using "Torx" socket wrench T40, tighten the striker mounting screws after the adjustment.
Torque: 23 N*m (235 kgf*cm, 17 ft.*lbf)

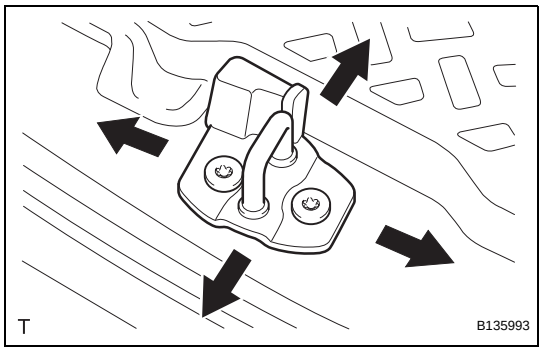

(k) Adjust the striker position by slightly loosening the striker mounting screws with "Torx" socket wrench T40 and hitting the striker with a plastic hammer (lower side).
(l) Using "Torx" socket wrench T40, tighten the striker mounting screws after the adjustment.
Torque: 23 N*m (235 kgf*cm, 17 ft.*lbf)

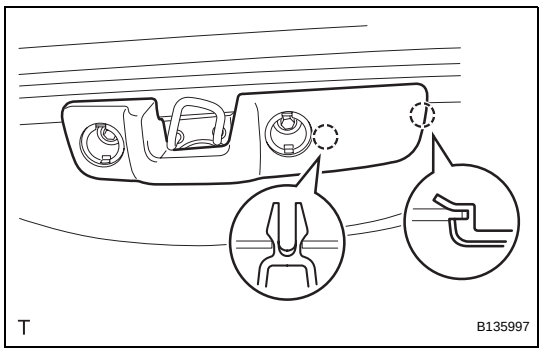

(m) Engage the 2 claws and install the No. 1 roof side rail garnish.

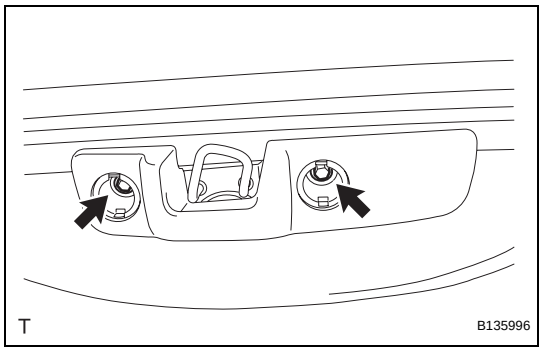

(n) Install the 2 bolts.

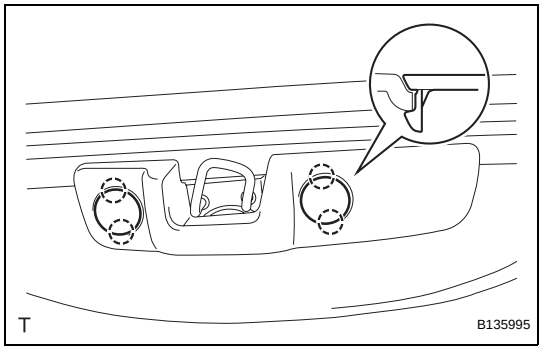

(o) Engage the 2 claws and install the roof side inner garnish cover.
(p) Connect the cable to the negative battery terminal.
Torque: 3.9 N*m (40 kgf*cm, 35 in.*lbf)
(q) Inspect the SRS warning light (see page RS-29).

REASSEMBLY

1. **CLEAN REAR DOOR GLASS (See page WS-58)**
2. **CLEAN VEHICLE BODY (See page WS-58)**
3. **INSTALL REAR DOOR GLASS**
   HINT:
   Use the same procedure as for the LH side (see page WS-59).
4. **INSTALL ACCESS DOOR GLASS OUTER WEATHERSTRIP**
   HINT:
   Use the same procedure as for the LH side (see page ET-43).
5. **INSTALL ACCESS DOOR OUTSIDE MOULDING SUB-ASSEMBLY**
   HINT:
   Use the same procedure as for the LH side (see page ET-74).
6. **INSTALL ACCESS PANEL LOWER LOCK STOP**
   (a) Using "Torx" socket wrench T40, install the access panel lower lock stop with the 2 screws.
   Torque: 23 N*m (235 kgf*cm, 17 ft.*lbf)

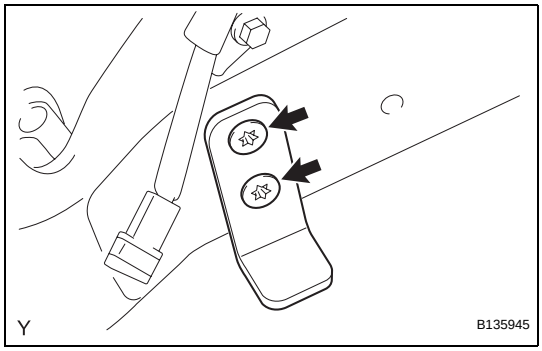

7. **INSTALL ACCESS PANEL WEATHERSTRIP**
   (a) Engage the 20 clips and install a new access panel weatherstrip.

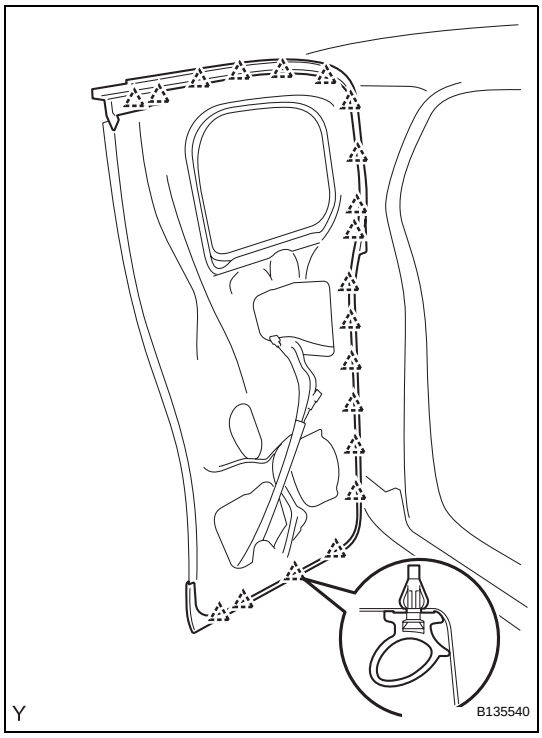

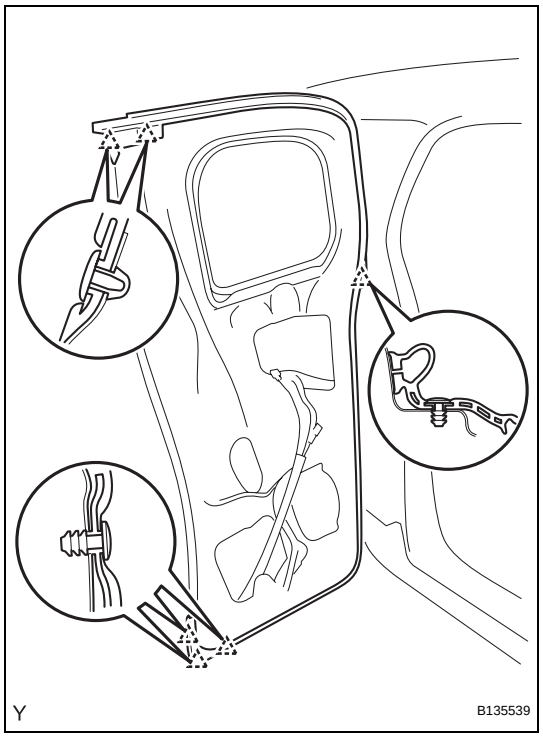

(b) Engage the 6 clips.

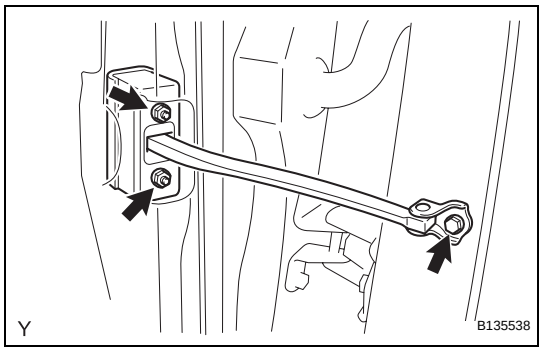

8. INSTALL ACCESS PANEL CHECK ASSEMBLY

(a) Apply MP grease to the sliding areas of the access panel check.

(b) Install the access panel check onto the door panel with the 2 nuts.
Torque: 5.5 N*m (56 kgf*cm, 49 in.*lbf)

(c) Apply adhesive to the threads of the bolt.
Adhesive:
Toyota Genuine Adhesive 1324, Three Bond 1324 or the equivalent.

(d) Install the access panel check onto the body panel with the bolt.
Torque: 30 N*m (306 kgf*cm, 22 ft.*lbf)

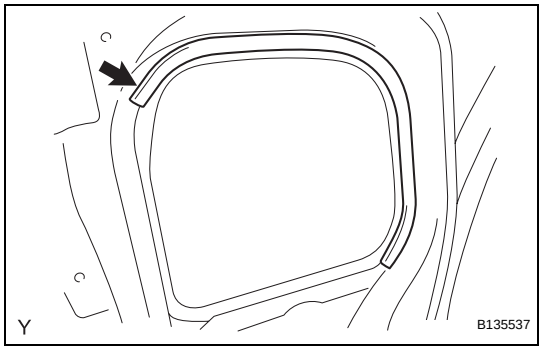

9. INSTALL REAR DOOR OPENING TRIM

(a) Install the rear door opening trim.

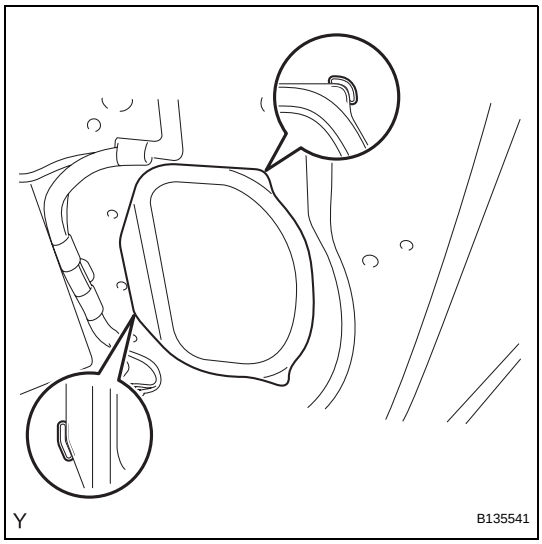

10. INSTALL REAR DOOR SERVICE HOLE COVER

(a) Install a new rear door service hole cover.
HINT:
After attaching the service hole cover, check the quality of the seal.

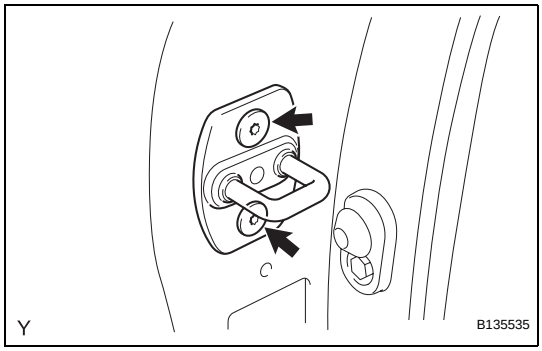

11. INSTALL ACCESS PANEL LOCK STRIKER PLATE ASSEMBLY

(a) Using "Torx" socket wrench T40, install the access panel lock striker plate with the 2 screws.
Torque: 23 N*m (235 kgf*cm, 17 ft.*lbf)

12. INSTALL FRONT DOOR COURTESY SWITCH (See page LI-114)

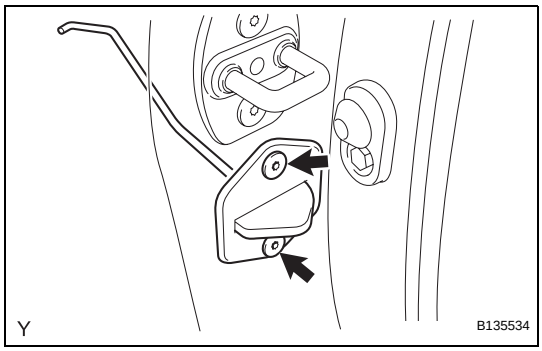

13. INSTALL ACCESS PANEL LOCK CANCEL LEVER ASSEMBLY

(a) Using "Torx" socket wrench T30, install the access panel lock cancel lever with the 2 screws.
Torque: 5.0 N*m (51 kgf*cm, 44 in.*lbf)

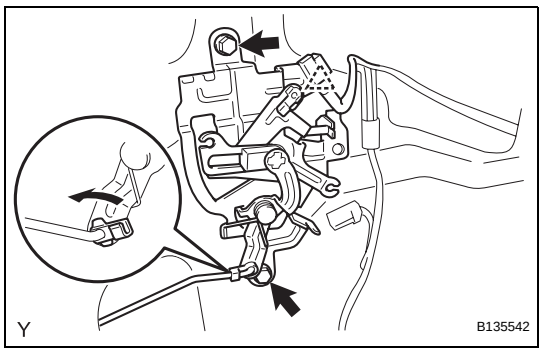

14. INSTALL ACCESS PANEL LOCK REMOTE CONTROL ASSEMBLY

(a) Apply MP grease to the sliding and rotating areas of the access panel lock remote control.
(b) Install the access panel lock remote control with the 2 bolts and the clip.
Torque: 12 N*m (122 kgf*cm, 9 ft.*lbf)
(c) Connect the rod and connector clamp.

15. INSTALL ACCESS PANEL LOWER LOCK ASSEMBLY (See page LI-120)

16. INSTALL ACCESS PANEL UPPER LOCK ASSEMBLY (See page LI-117)

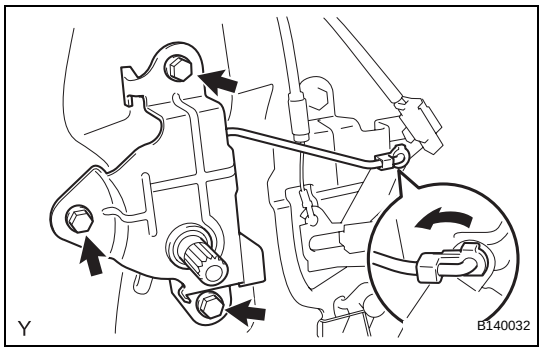

17. INSTALL ACCESS PANEL INSIDE HANDLE SUB-ASSEMBLY

(a) Install the access panel inside handle with the 3 bolts.
Torque: 12 N*m (122 kgf*cm, 9 ft.*lbf)

(b) Connect the rod.

18. INSTALL FRONT SHOULDER BELT ANCHOR ADJUSTER ASSEMBLY (See page SB-39)

19. INSTALL FRONT SEAT OUTER BELT ASSEMBLY (See page SB-39)

20. INSTALL CENTER PILLAR UPPER GARNISH

(a) Engage the 2 clips and install the center pillar upper garnish.

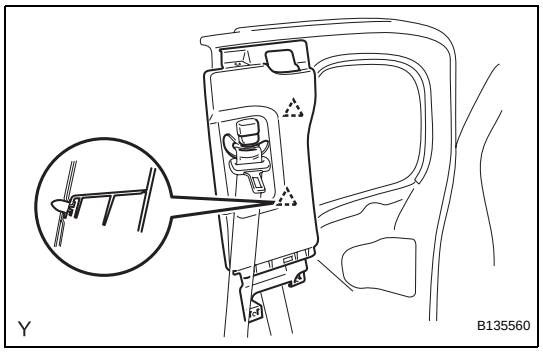

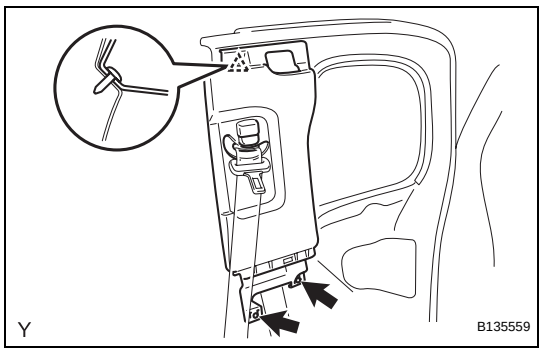

(b) Install the 2 screws.

(c) Install the clip.

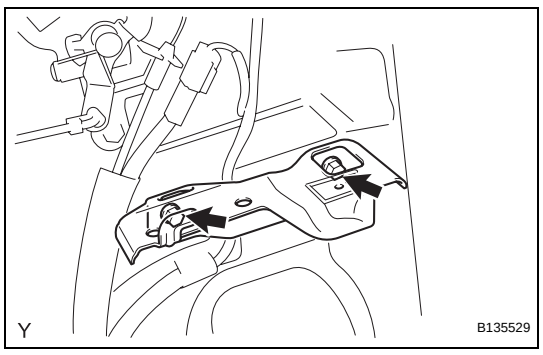

21. INSTALL REAR DOOR TRIM BRACKET

(a) Install the rear door trim bracket with the 2 screws.

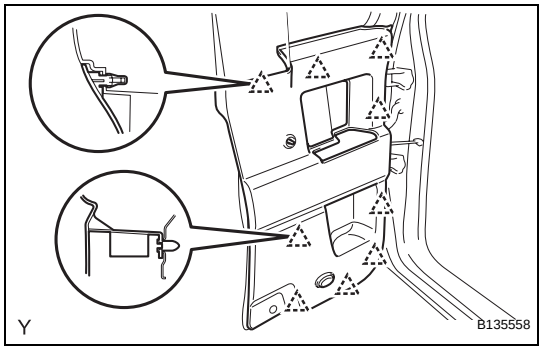

22. INSTALL REAR DOOR TRIM BOARD SUB-ASSEMBLY

(a) Engage the 9 clips and install the rear door trim board.

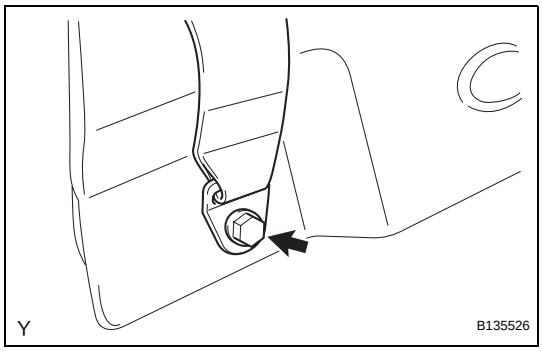

(b) Install the front seat belt outer (floor side) with the bolt.
Torque: 42 N*m (428 kgf*cm, 31 ft.*lbf)

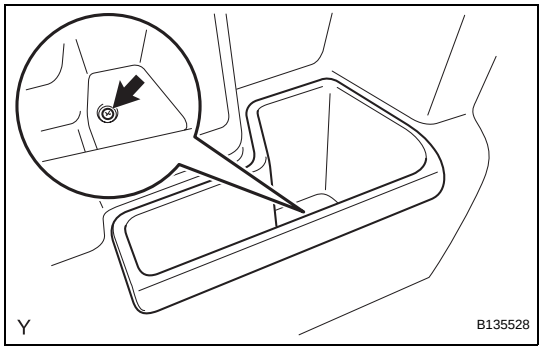

23. INSTALL NO. 1 CUP HOLDER
(a) Install the No. 1 cup holder with the screw.

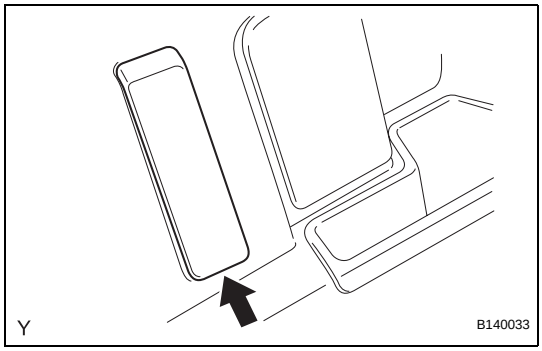

24. INSTALL REAR DOOR INSIDE HANDLE SUB-ASSEMBLY
(a) Install the rear door inside handle with the snap ring onto the access panel inside handle.

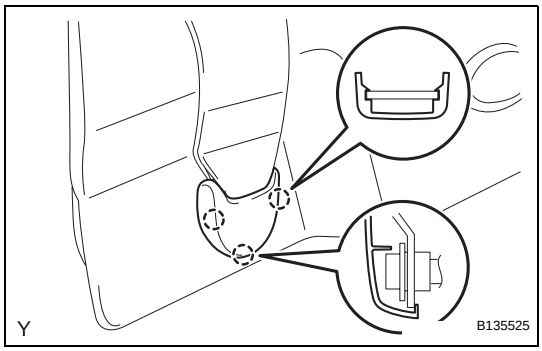

25. INSTALL LAP BELT OUTER ANCHOR COVER
(a) Engage the 3 claws and install the lap belt outer anchor cover.

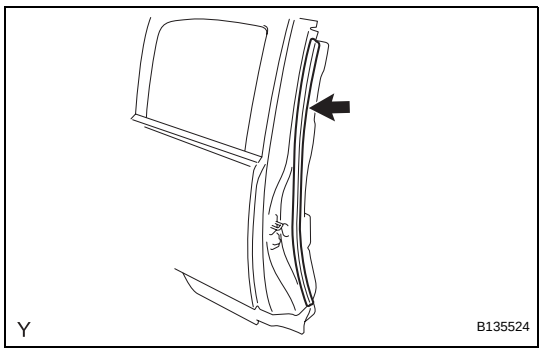

26. INSTALL ACCESS PANEL REAR WEATHERSTRIP
(a) Install the access panel rear weatherstrip.

27. CONNECT CABLE TO NEGATIVE BATTERY TERMINAL
Torque: 3.9 N*m (40 kgf*cm, 35 in.*lbf)

BACK DOOR

COMPONENTS

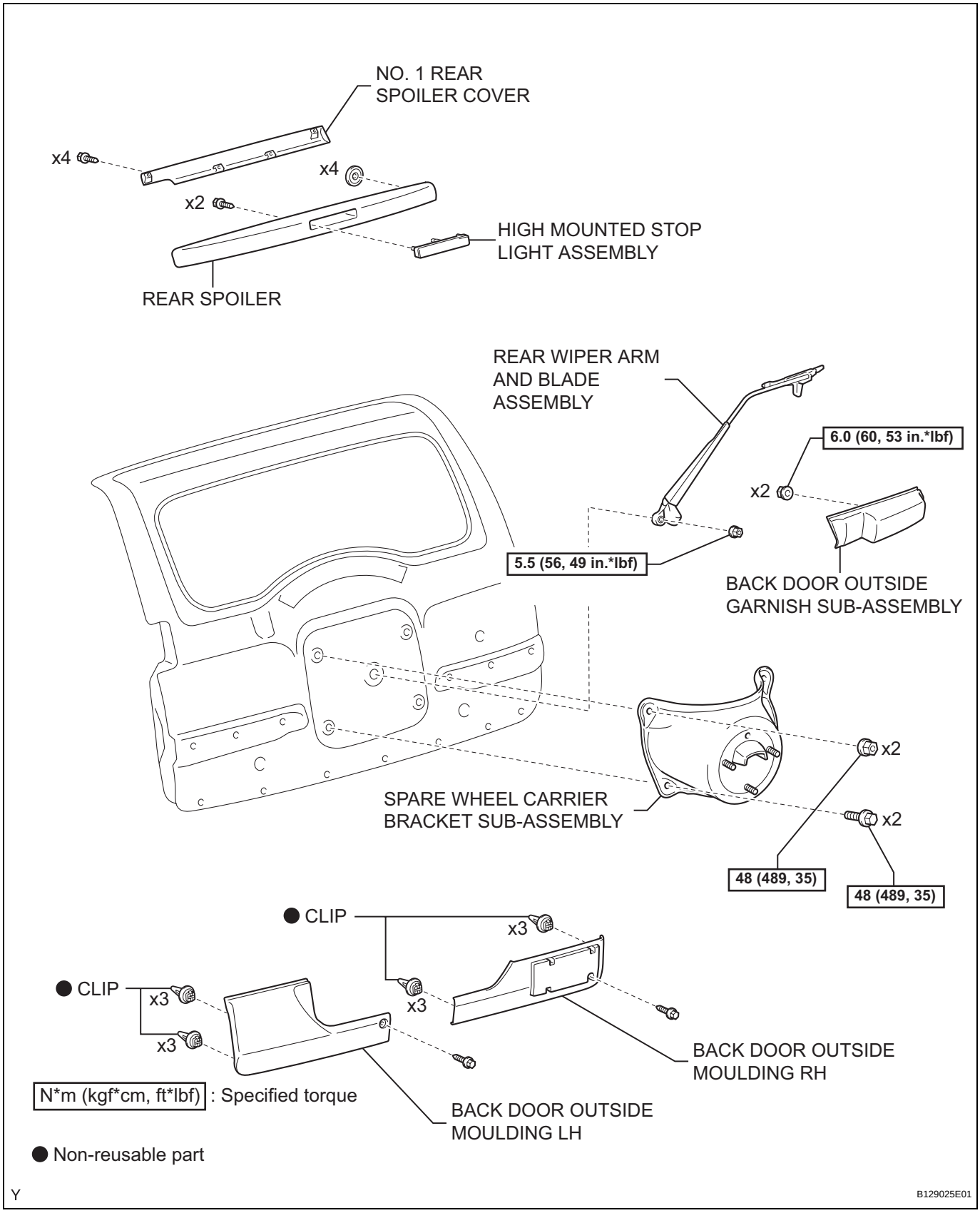

ED

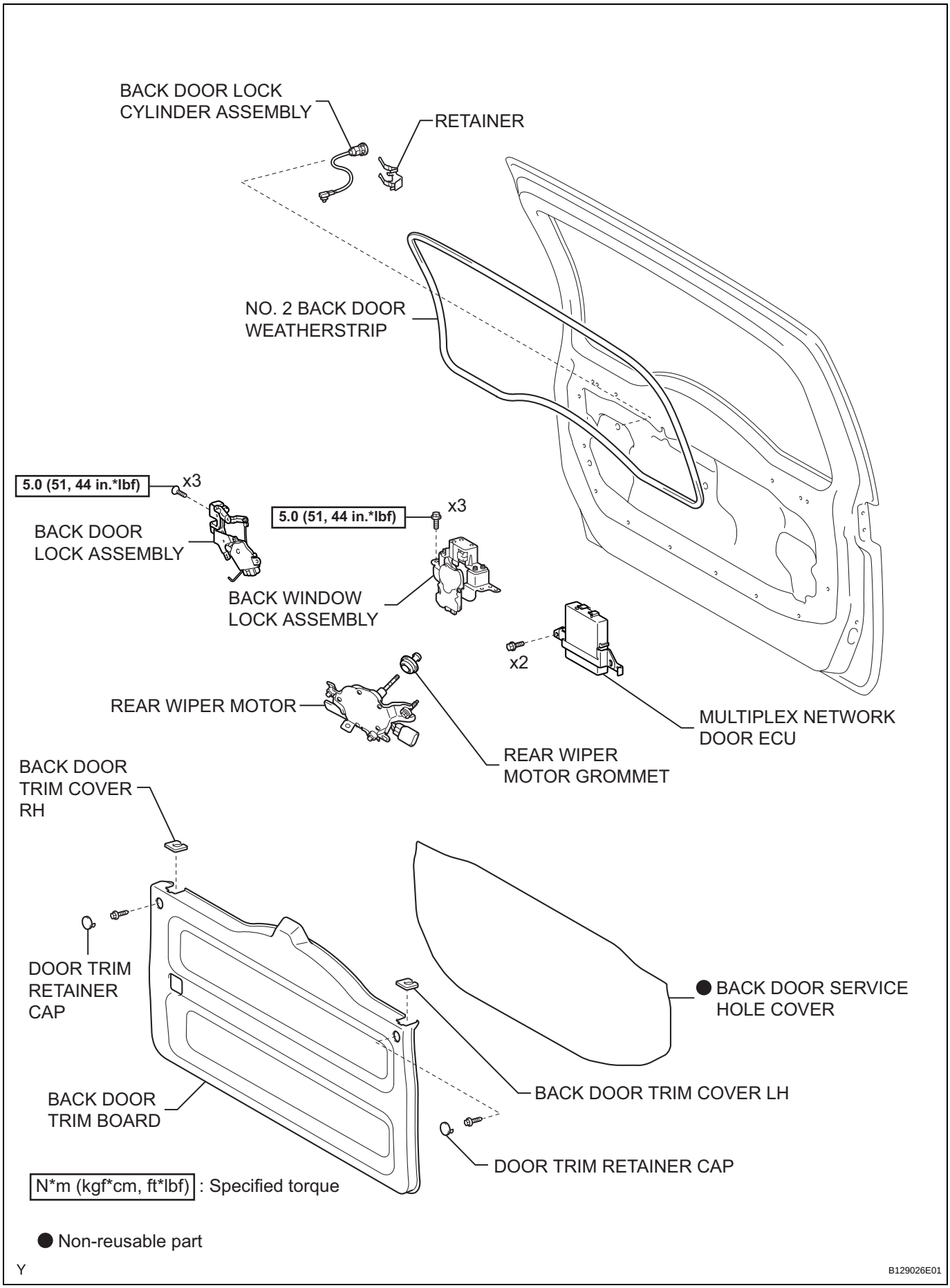
BACK DOOR LOCK CYLINDER ASSEMBLY
RETAINER
NO. 2 BACK DOOR WEATHERSTRIP
5.0 (51, 44 in.*lbf)
x3
BACK DOOR LOCK ASSEMBLY
5.0 (51, 44 in.*lbf)
x3
BACK WINDOW LOCK ASSEMBLY
x2
MULTIPLEX NETWORK DOOR ECU
REAR WIPER MOTOR
REAR WIPER MOTOR GROMMET
BACK DOOR TRIM COVER RH
DOOR TRIM RETAINER CAP
● BACK DOOR SERVICE HOLE COVER
BACK DOOR TRIM COVER LH
BACK DOOR TRIM BOARD
DOOR TRIM RETAINER CAP
N*m (kgf*cm, ft*lbf) : Specified torque
● Non-reusable part
Y
B129026E01

ED

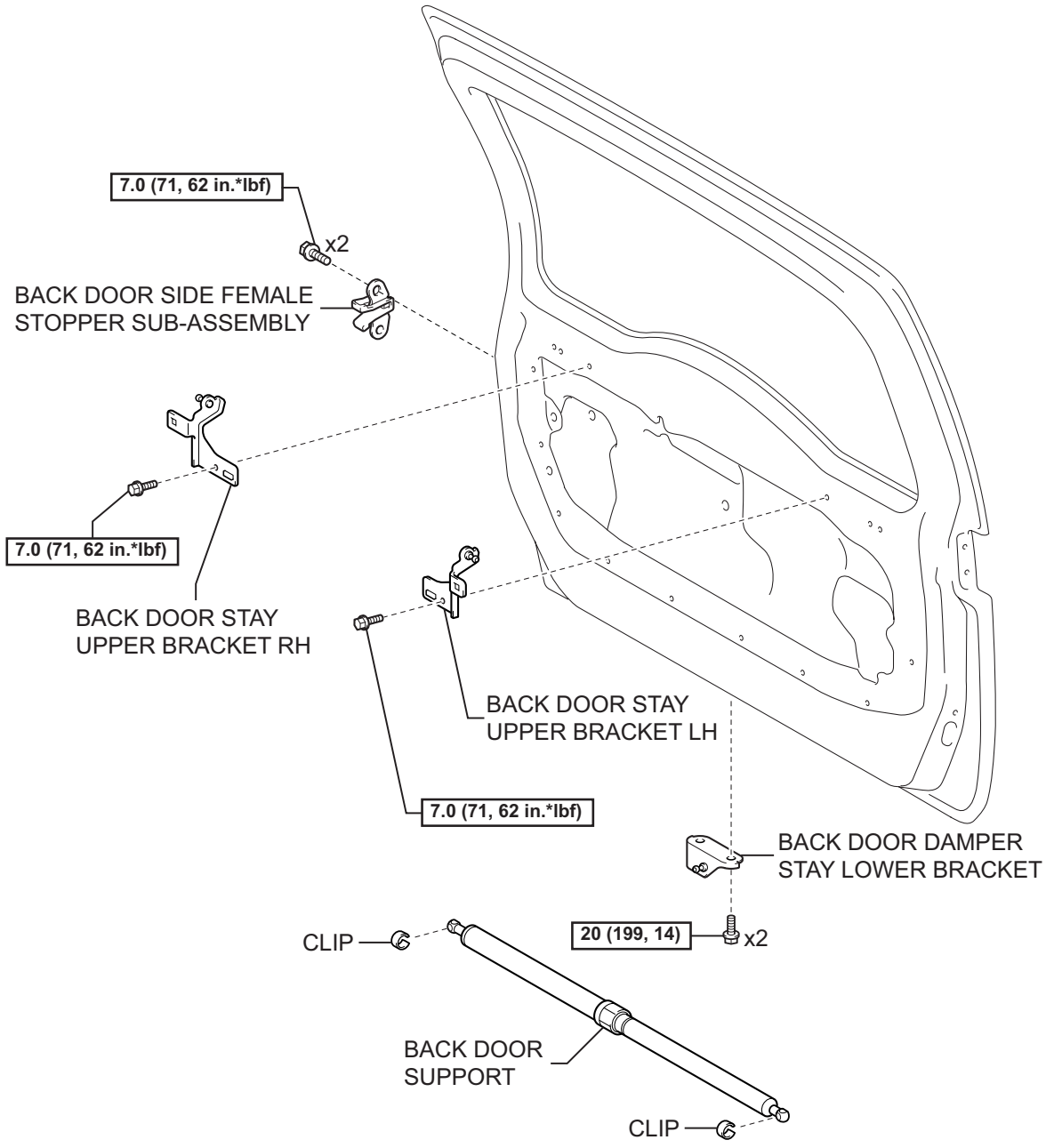

N*m (kgf*cm, ft*lbf) : Specified torque

Y

B129027E01

ED

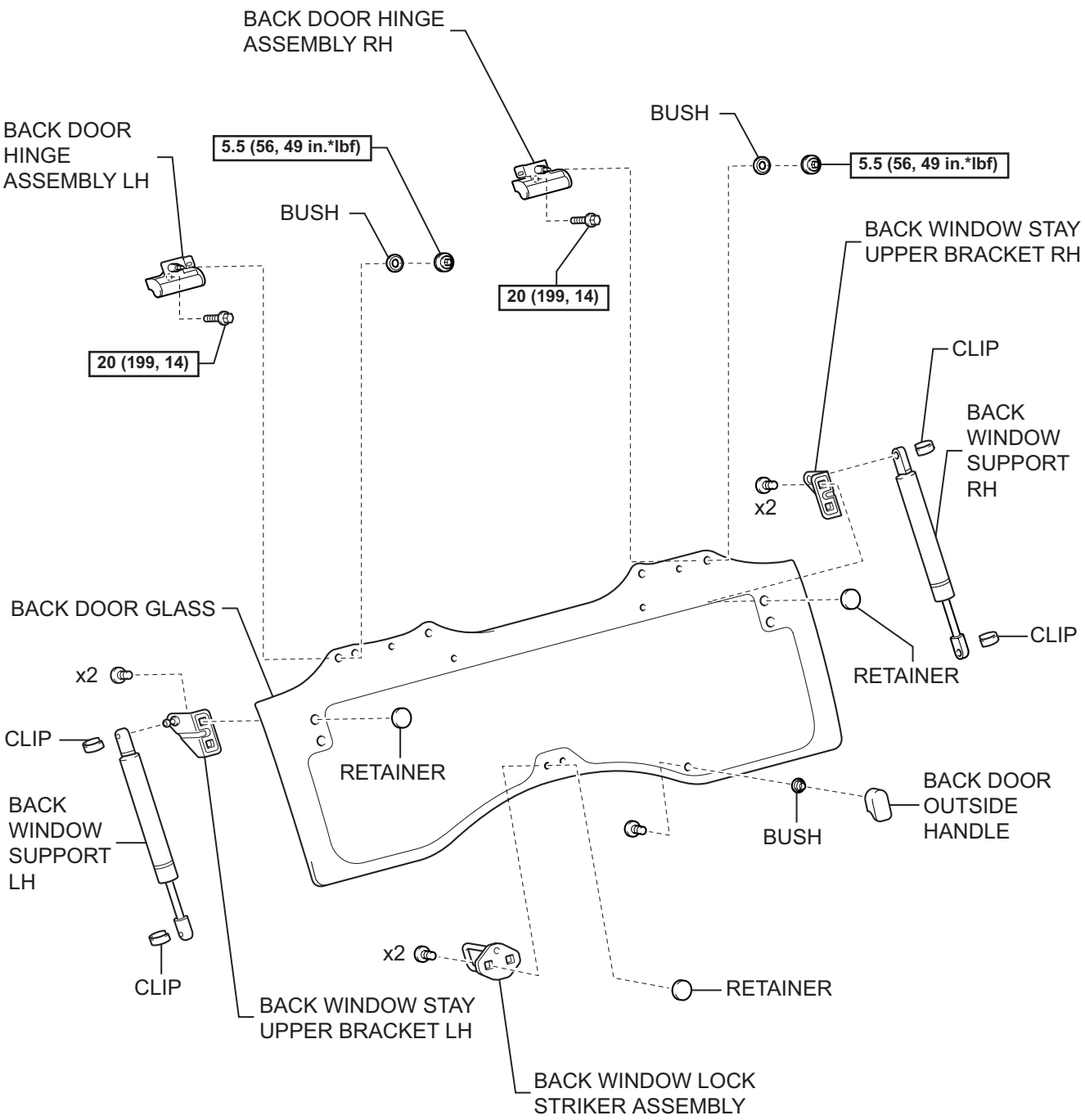

N*m (kgf*cm, ft*lbf) : Specified torque

Y

B129028E01

ED

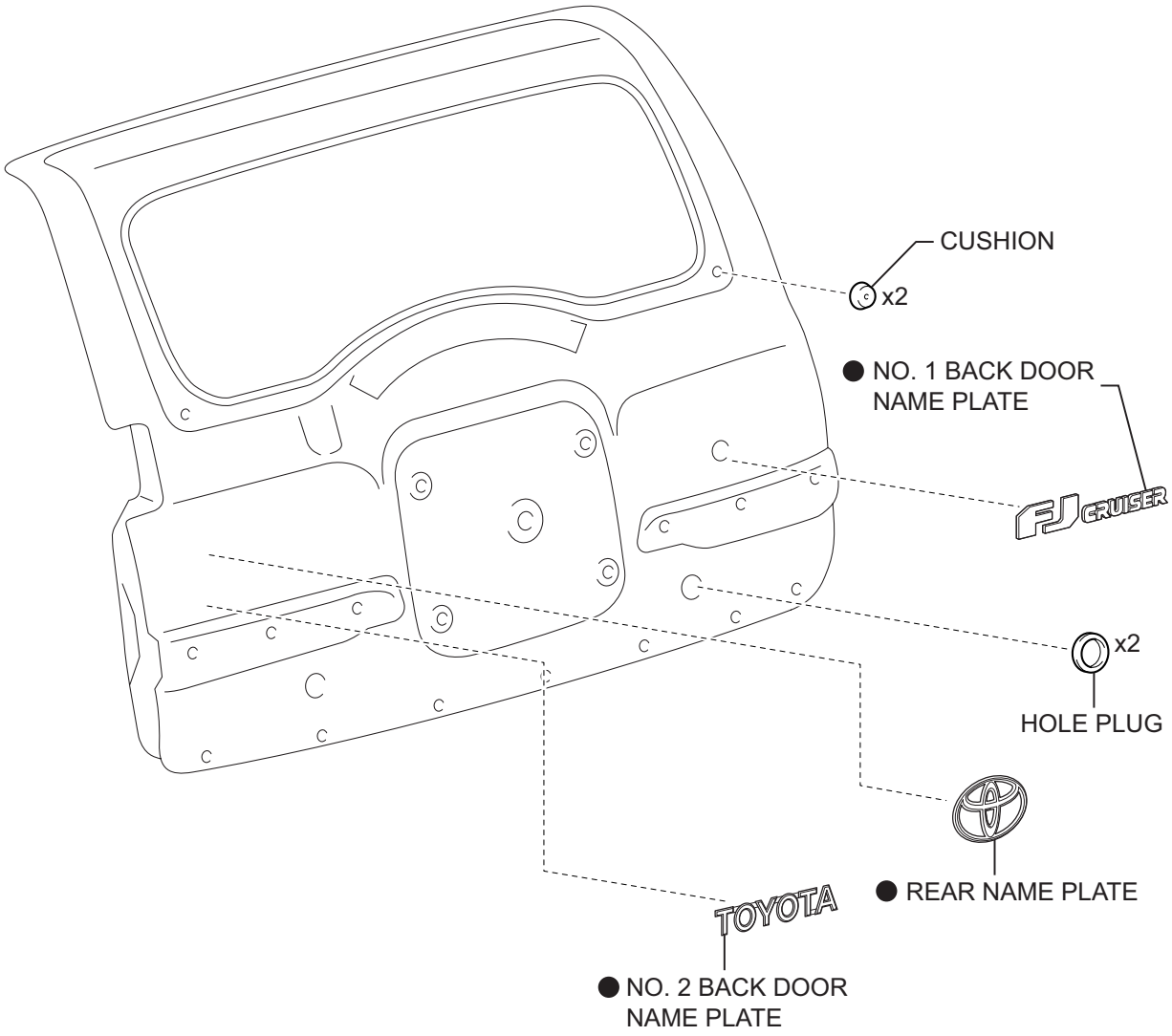

● Non-reusable part

Y

B129029E01

ED

DISASSEMBLY

1. **DISCONNECT CABLE FROM NEGATIVE BATTERY TERMINAL**
2. **REMOVE SPARE DISC WHEEL**
3. **REMOVE BACK DOOR OUTSIDE MOULDING LH (See page ET-70)**
4. **REMOVE BACK DOOR OUTSIDE MOULDING RH (See page ET-71)**
5. **REMOVE SPARE WHEEL CARRIER BRACKET SUB-ASSEMBLY**
   (a) Remove the 2 bolts, 2 nuts and the spare wheel carrier bracket.

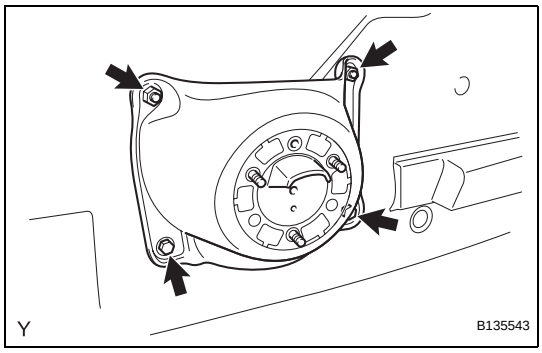

6. **REMOVE BACK DOOR TRIM COVER RH**
   (a) Using a screwdriver with its tip wrapped in protective tape, disengage the 3 claws and remove the back door trim cover.
7. **REMOVE BACK DOOR TRIM COVER LH**
   HINT:
   Use the same procedure as described for the RH side.

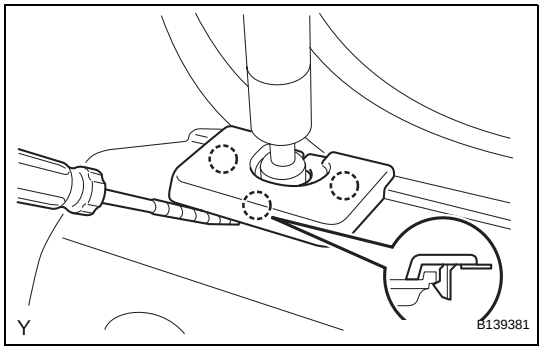

8. **REMOVE DOOR TRIM RETAINER CAP**
   (a) Using a screwdriver with its tip wrapped in protective tape, disengage the 2 claws and remove the door trim retainer cap.

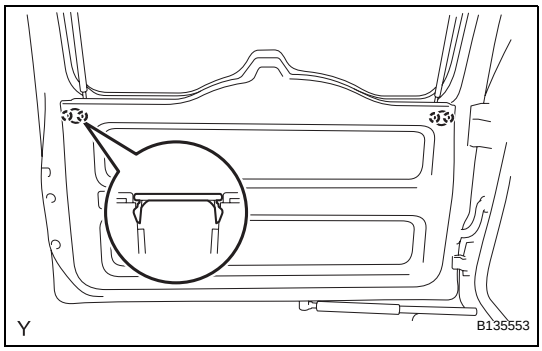

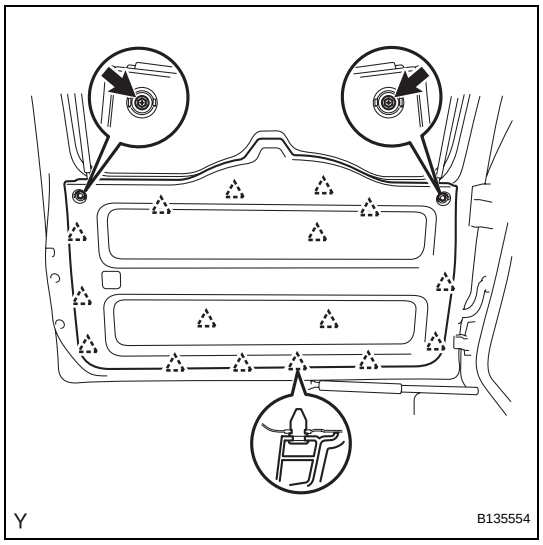

9. REMOVE BACK DOOR TRIM BOARD

(a) Remove the 2 screws.

(b) Disengage the 16 clips and remove the back door trim board.

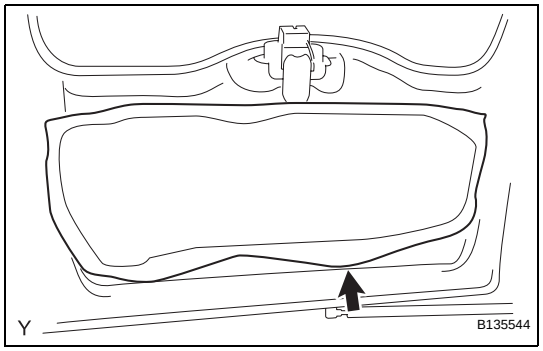

10. REMOVE BACK DOOR SERVICE HOLE COVER

(a) Remove the back door service hole cover.

NOTICE:

Remove any tape remaining on the door side.

11. REMOVE REAR WIPER ARM AND BLADE ASSEMBLY (w/ Rear Wiper) (See page WW-39)

12. REMOVE REAR WIPER MOTOR (w/ Rear Wiper) (See page WW-40)

13. REMOVE REAR WIPER MOTOR GROMMET (w/ Rear Wiper)

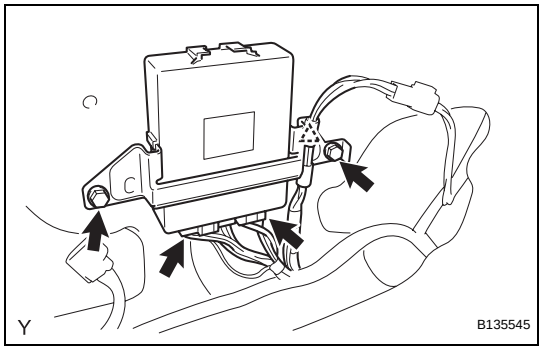

14. REMOVE MULTIPLEX NETWORK DOOR ECU

(a) Disconnect the 2 connectors and harness clamp.

(b) Remove the 2 screws and the multiplex network door ECU.

15. REMOVE BACK WINDOW LOCK ASSEMBLY (See page WS-93)

16. REMOVE BACK DOOR OUTSIDE GARNISH SUB-ASSEMBLY (See page ET-90)

17. REMOVE BACK DOOR LOCK ASSEMBLY (See page DL-116)

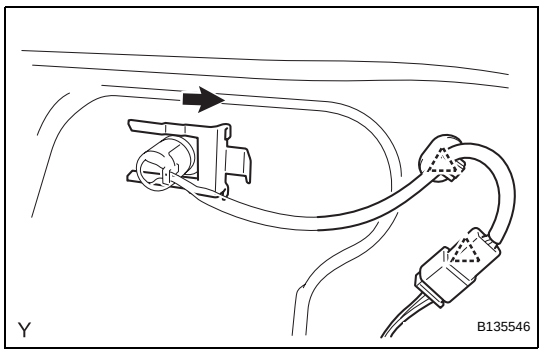

18. REMOVE BACK DOOR LOCK CYLINDER ASSEMBLY

(a) Disconnect the connector and the 2 clamps.

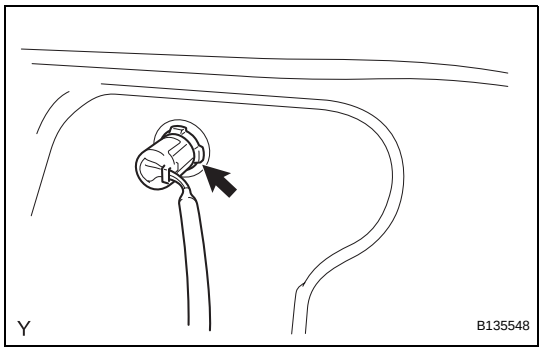

(b) Remove the retainer and the back door lock cylinder.

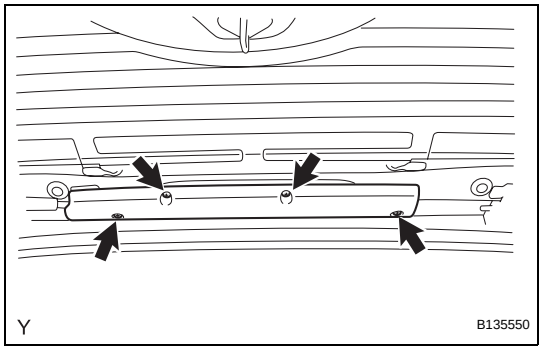

19. **REMOVE NO. 1 REAR SPOILER COVER**
(a) Remove the 4 screws and No. 1 rear spoiler cover.

20. **REMOVE REAR SPOILER (See page ET-34)**

21. **REMOVE HIGH MOUNTED STOP LIGHT ASSEMBLY (See page ET-35)**

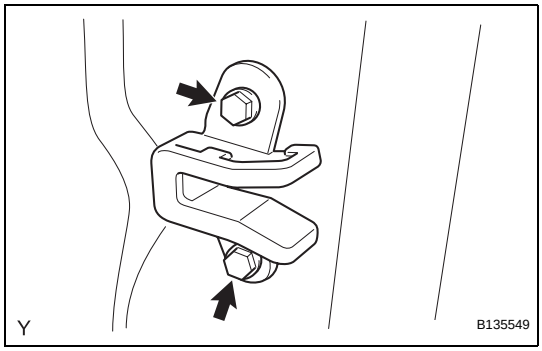

22. **REMOVE BACK DOOR SIDE FEMALE STOPPER SUB-ASSEMBLY**
(a) Remove the 2 bolts and back door side female stopper.

23. **REMOVE BACK WINDOW SUPPORT LH (See page ED-61)**

24. **REMOVE BACK WINDOW SUPPORT RH**
HINT:
Use the same procedure as described for the LH side.

25. **REMOVE BACK DOOR GLASS (See page WS-63)**

26. **REMOVE BACK WINDOW STAY UPPER BRACKET RH (See page WS-63)**

27. **REMOVE BACK WINDOW STAY UPPER BRACKET LH**
HINT:
Use the same procedure as described for the RH side.

28. **REMOVE BACK WINDOW LOCK STRIKER ASSEMBLY (See page WS-63)**

29. **REMOVE BACK DOOR OUTSIDE HANDLE (See page WS-64)**

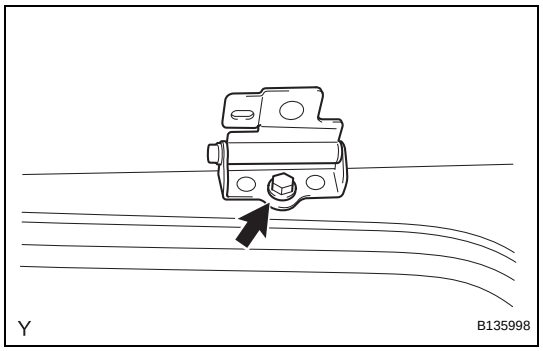

30. REMOVE BACK DOOR HINGE ASSEMBLY RH

(a) Remove the bolt and the back door hinge.

31. REMOVE BACK DOOR HINGE ASSEMBLY LH

HINT:

Use the same procedure as described for the RH side.

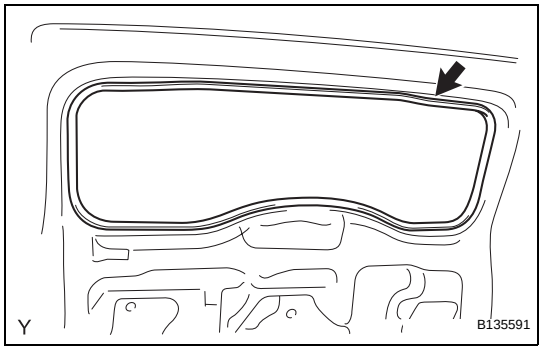

32. REMOVE NO. 2 BACK DOOR WEATHERSTRIP

(a) Remove the No. 2 back door weatherstrip.

NOTICE:

Remove any tape remaining on the door side.

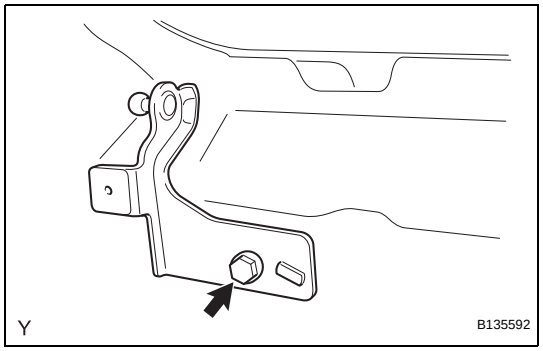

33. REMOVE BACK DOOR STAY UPPER BRACKET RH

(a) Remove the bolt and the back door stay upper bracket.

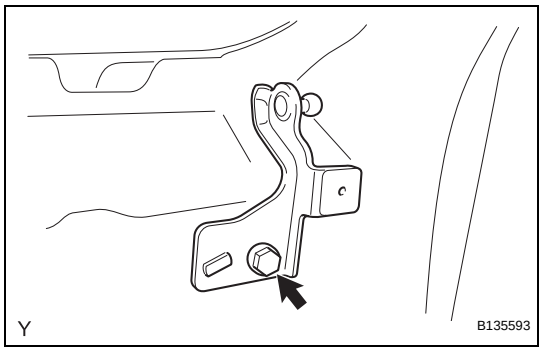

34. REMOVE BACK DOOR STAY UPPER BRACKET LH

(a) Remove the bolt and the back door stay upper bracket.

35. REMOVE BACK DOOR SUPPORT (See page ED-59)

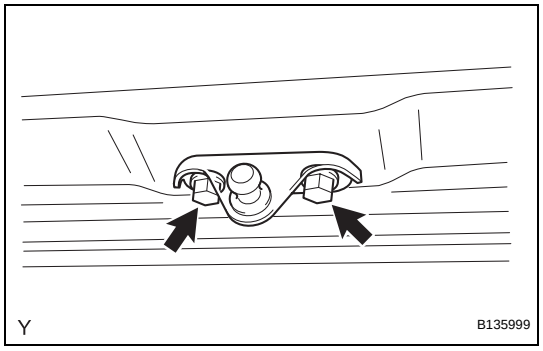

36. REMOVE BACK DOOR DAMPER STAY LOWER BRACKET

(a) Remove the 2 bolts and the back door damper stay lower bracket.

37. REMOVE NO. 1 BACK DOOR NAME PLATE (See page ET-28)

38. REMOVE NO. 2 BACK DOOR NAME PLATE (See page ET-28)

39. REMOVE REAR NAME PLATE (See page ET-29)

40. REMOVE CUSHION

(a) Remove the 2 cushions.

41. REMOVE HOLE PLUG

(a) Remove the 2 hole plugs.

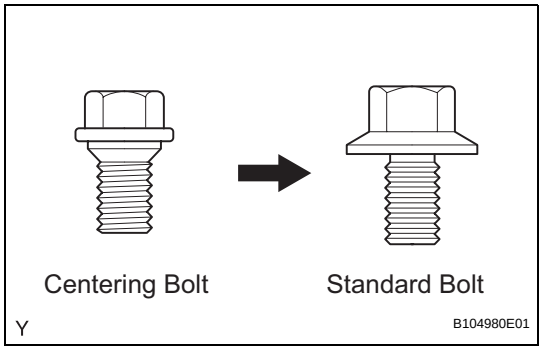

ADJUSTMENT

HINT:

- Centering bolts are used to mount the door hinge onto the vehicle body and door. The door cannot be adjusted with the centering bolts on. Substitute standard bolts (with washers) for the centering bolts when making adjustments.
- For bolts without torque specifications, check the standard bolt chart (see page SS-2).

1. INSPECT BACK DOOR

(a) Check that the clearance measurements are within the standard ranges.

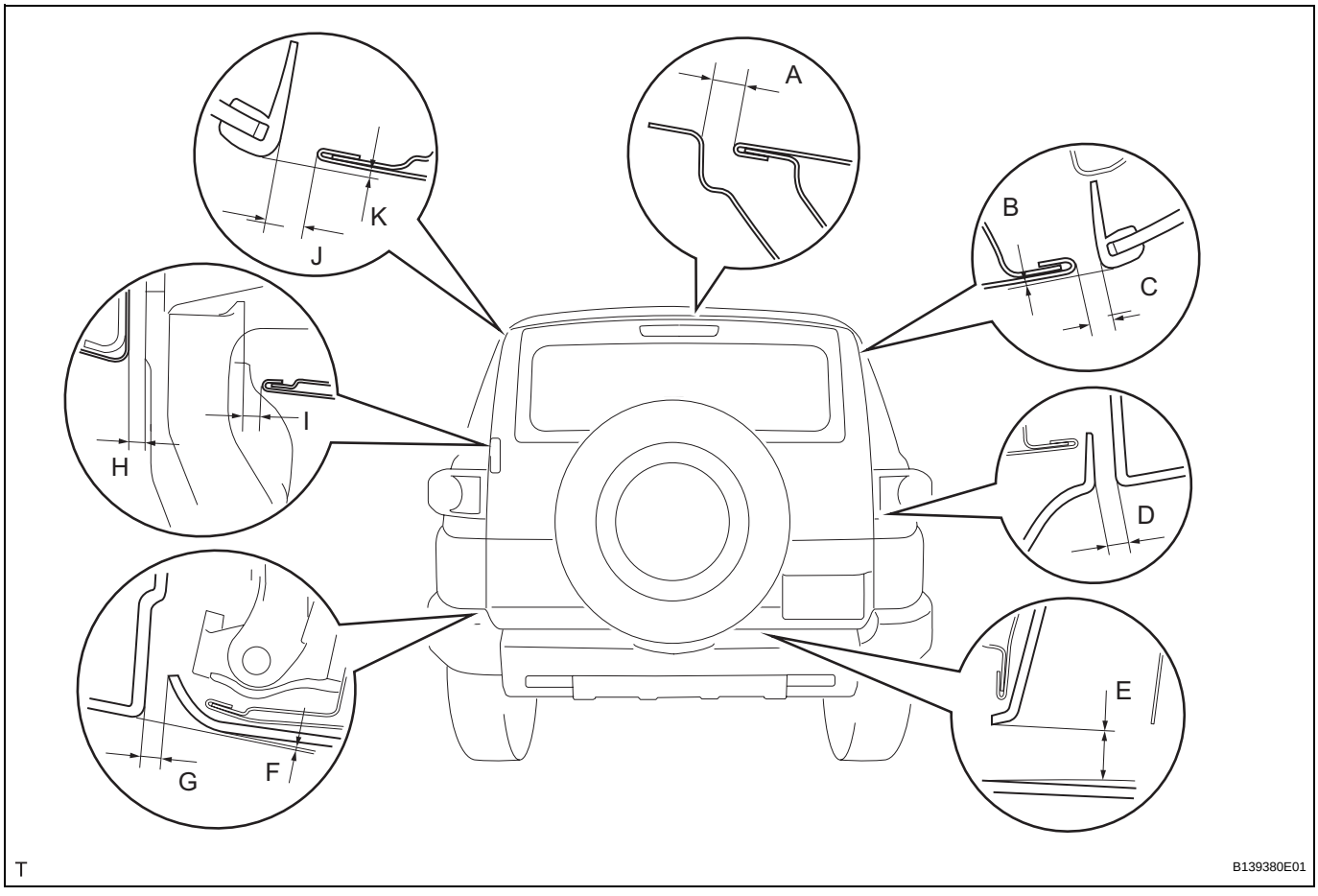

Standard

Area	Measurement	Area	Measurement
A	8.5 to 11.5 mm (0.335 to 0.453 in.)	G	5 to 8 mm (0.197 to 0.315 in.)
B	0 to 3 mm (0 to 0.118 in.)	H	3.5 to 6.5 mm (0.138 to 0.256 in.)
C	5.5 to 8.5 mm (0.217 to 0.335 in.)	I	2.8 to 5.8 mm (0.110 to 0.228 in.)
D	5 to 8 mm (0.197 to 0.315 in.)	J	5.5 to 8.5 mm (0.217 to 0.335 in.)

Area	Measurement	Area	Measurement
E	13.5 to 16.5 mm (0.531 to 0.650 in.)	K	0 to 3 mm (0 to 0.118 in.)
F	-0.9 to 2.1 mm (-0.035 to 0.0827in.)	-	-

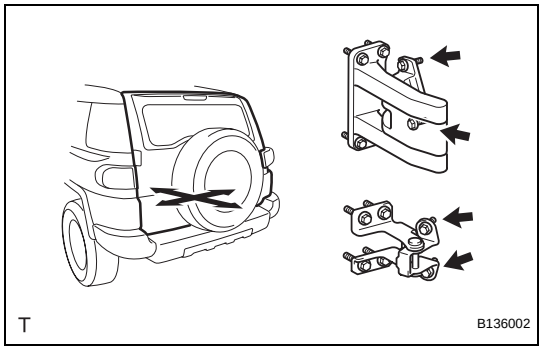

2. ADJUST BACK DOOR

(a) Adjust the door position.

(1) Adjust the door horizontally and longitudinally by loosening the 4 door side hinge bolts.

(2) Tighten the door side hinge bolts after the adjustment.

Torque: 26 N*m (265 kgf*cm, 19 ft.*lbf)

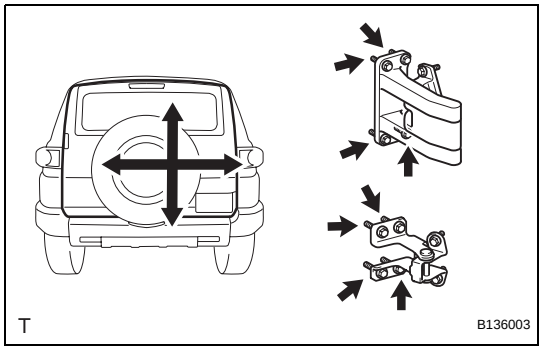

(3) Horizontally and vertically adjust the door by loosening the 8 body side hinge bolts.

(4) Tighten the body side hinge bolts after the adjustment.

Torque: 42 N*m (428 kgf*cm, 31 ft.*lbf)

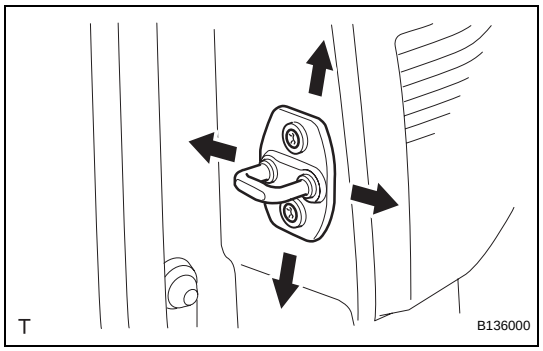

(b) Adjust the striker position.

(1) Adjust the striker position by slightly loosening the striker mounting screws and hitting the striker with a plastic hammer.

(2) Tighten the striker mounting screws after the adjustment.

Torque: 23 N*m (235 kgf*cm, 17 ft.*lbf)

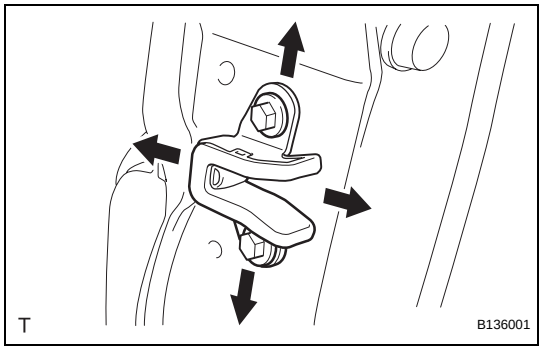

(c) Adjust the back door side female stopper.

(1) Adjust the side female stopper so that the door can be opened/closed smoothly, as shown in the illustration.

(2) Tighten the side female stopper bolts after the adjustment.

Torque: 7.0 N*m (71 kgf*cm, 62 in.*lbf)

REASSEMBLY

1. **INSTALL HOLE PLUG**
   (a) Install the 2 hole plugs.
2. **INSTALL CUSHION**
   (a) Install the 2 cushions.
3. **INSTALL REAR NAME PLATE (See page ET-29)**
4. **INSTALL NO. 2 BACK DOOR NAME PLATE (See page ET-30)**
5. **INSTALL NO. 1 BACK DOOR NAME PLATE (See page ET-31)**
6. **INSTALL BACK DOOR DAMPER STAY LOWER BRACKET**
   (a) Install the back door damper stay lower bracket with the 2 bolts.
   Torque: 20 N*m (199 kgf*cm, 14 ft.*lbf)
7. **INSTALL BACK DOOR SUPPORT (See page ED-59)**

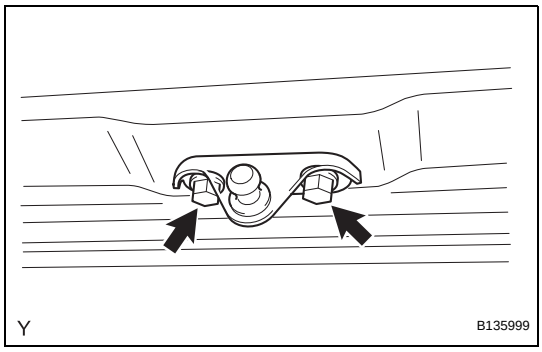

8. **INSTALL BACK DOOR STAY UPPER BRACKET LH**
   (a) Install the back door stay upper bracket with the bolt.
   Torque: 7.0 N*m (71 kgf*cm, 62 in.*lbf)

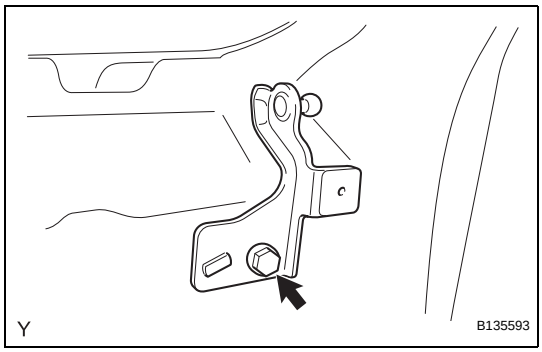

9. **INSTALL BACK DOOR STAY UPPER BRACKET RH**
   (a) Install the back door stay upper bracket with the bolt.
   Torque: 7.0 N*m (71 kgf*cm, 62 in.*lbf)

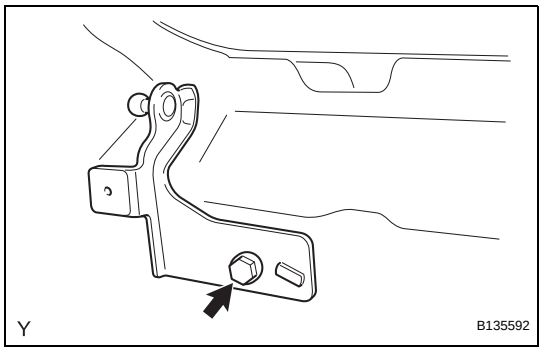

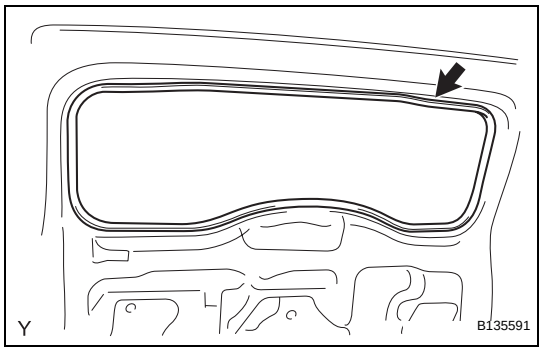

10. **INSTALL NO. 2 BACK DOOR WEATHERSTRIP**
    (a) Install the No. 2 back door weatherstrip.

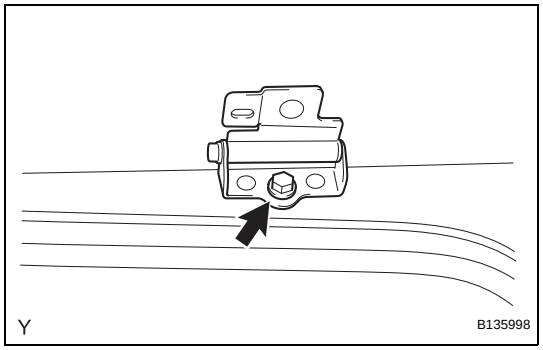

11. **INSTALL BACK DOOR HINGE ASSEMBLY RH**
    (a) Install the back door hinge with the bolt.
    Torque: 20 N*m (199 kgf*cm, 14 ft.*lbf)
12. **INSTALL BACK DOOR HINGE ASSEMBLY LH**
    HINT:
    Use the same procedure as described for the RH side.
13. **INSTALL BACK DOOR OUTSIDE HANDLE (See page WS-65)**
14. **INSTALL BACK WINDOW LOCK STRIKER ASSEMBLY (See page WS-65)**
15. **INSTALL BACK WINDOW STAY UPPER BRACKET RH (See page WS-65)**
16. **INSTALL BACK WINDOW STAY UPPER BRACKET LH**
    HINT:
    Use the same procedure as described for the RH side.
17. **INSTALL BACK DOOR GLASS (See page WS-66)**
18. **INSTALL BACK WINDOW SUPPORT LH (See page ED-61)**
19. **INSTALL BACK WINDOW SUPPORT RH**
    HINT:
    Use the same procedure as described for the LH side.

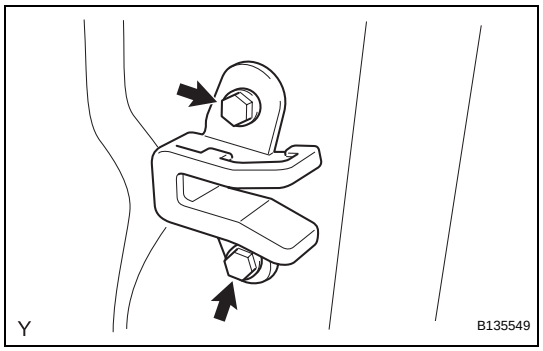

20. **INSTALL BACK DOOR SIDE FEMALE STOPPER SUB-ASSEMBLY**
    (a) Install the back door side female stopper with the 2 bolts.
    Torque: 7.0 N*m (71 kgf*cm, 62 in.*lbf)
21. **INSTALL HIGH MOUNTED STOP LIGHT ASSEMBLY (See page ET-35)**
22. **INSTALL REAR SPOILER (See page ET-35)**

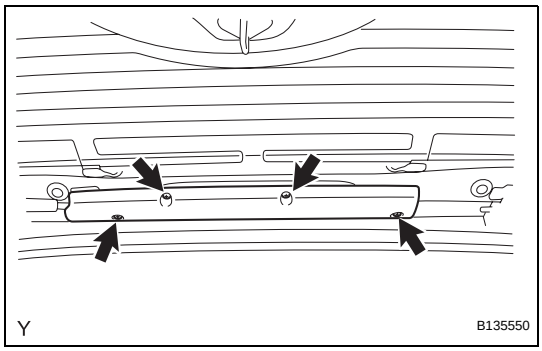

23. INSTALL NO. 1 REAR SPOILER COVER

(a) Install the No. 1 rear spoiler cover with the 4 screws.

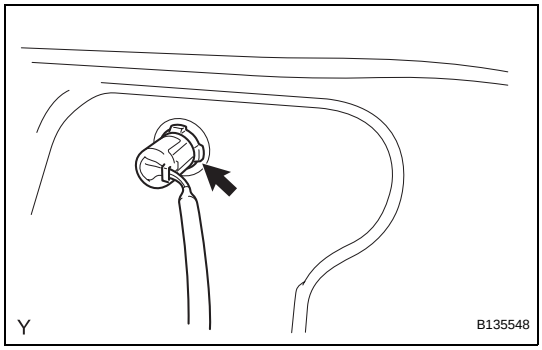

24. INSTALL BACK DOOR LOCK CYLINDER ASSEMBLY

(a) Install the back door lock cylinder with the retainer.

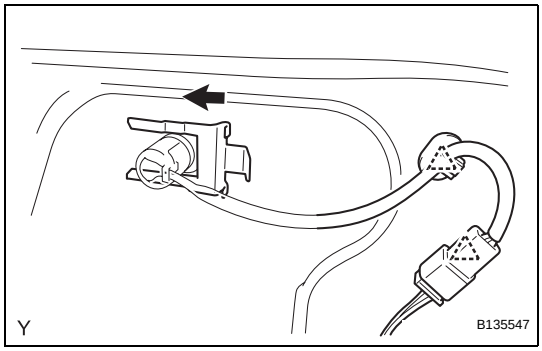

(b) Connect the connector and the 2 clamps.

25. INSTALL BACK DOOR LOCK ASSEMBLY (See page DL-118)

26. INSTALL BACK DOOR OUTSIDE GARNISH SUB-ASSEMBLY (See page ET-91)

27. INSTALL BACK WINDOW LOCK ASSEMBLY (See page WS-95)

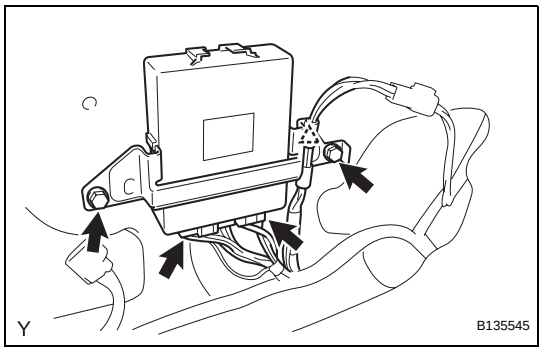

28. INSTALL MULTIPLEX NETWORK DOOR ECU

(a) Install the multiplex network door ECU with the 2 screws.

(b) Connect the 3 connectors and 2 harness clamps.

29. INSTALL REAR WIPER MOTOR GROMMET (w/ Rear Wiper)

30. INSTALL REAR WIPER MOTOR (w/ Rear Wiper) (See page WW-40)

31. INSTALL REAR WIPER ARM AND BLADE ASSEMBLY (w/ Rear Wiper) (See page WW-41)

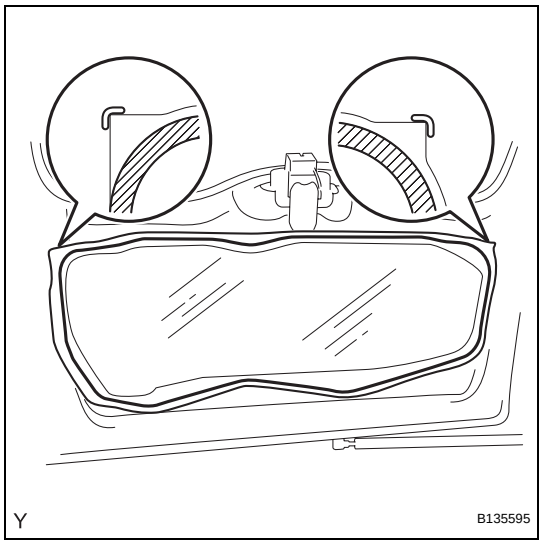

32. INSTALL BACK DOOR SERVICE HOLE COVER

(a) Apply butyl tape to the door panel, then install the new back door service hole cover as shown in the illustration.

HINT:

- When installing the service hole cover, pull the links and connectors out through the service hole.
- There should be no wrinkles or folds after attaching the service hole cover.
- After attaching the service hole cover, check the quality of the seal.

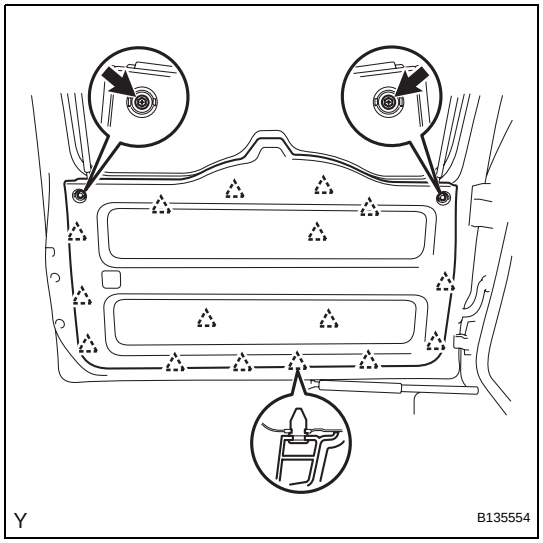

33. INSTALL BACK DOOR TRIM BOARD

(a) Engage the 16 clips and install the back door trim board.

(b) Install the 2 screws.

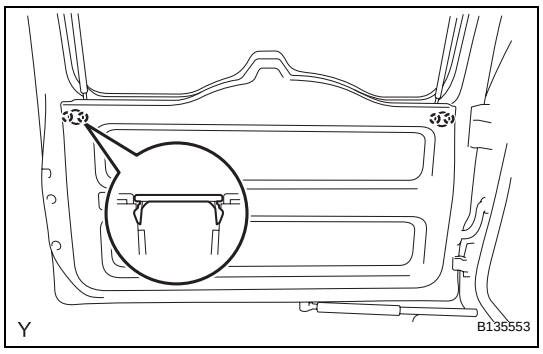

34. INSTALL DOOR TRIM RETAINER CAP

(a) Engage the 2 claws and install the door trim retainer cap.

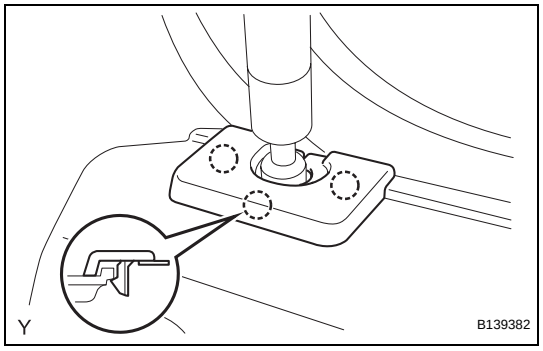

35. INSTALL BACK DOOR TRIM COVER RH

(a) Engage the 3 claws and back door trim cover.

36. INSTALL BACK DOOR TRIM COVER LH

HINT:

Use the same procedure as described for the RH side.

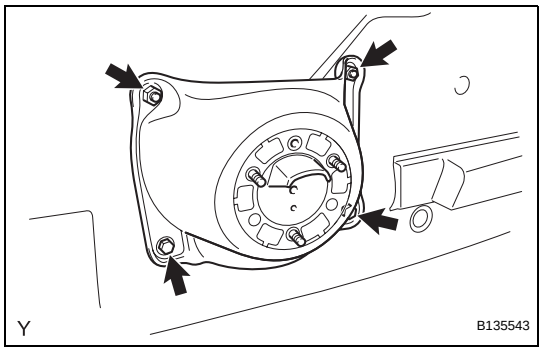

37. **INSTALL SPARE WHEEL CARRIER BRACKET SUB-ASSEMBLY**
    (a) Install the spare wheel carrier bracket with the 2 bolts and 2 nuts.
    Torque: 48 N*m (489 kgf*cm, 35 ft.*lbf)

38. **INSTALL BACK DOOR OUTSIDE MOULDING RH (See page ET-72)**

39. **INSTALL BACK DOOR OUTSIDE MOULDING LH (See page ET-73)**

40. **INSTALL SPARE DISC WHEEL**
    Torque: 88 N*m (897 kgf*cm, 65 ft.*lbf)

41. **CONNECT CABLE TO NEGATIVE BATTERY TERMINAL**
    Torque: 3.9 N*m (40 kgf*cm, 35 in.*lbf)

BACK DOOR SUPPORT

COMPONENTS

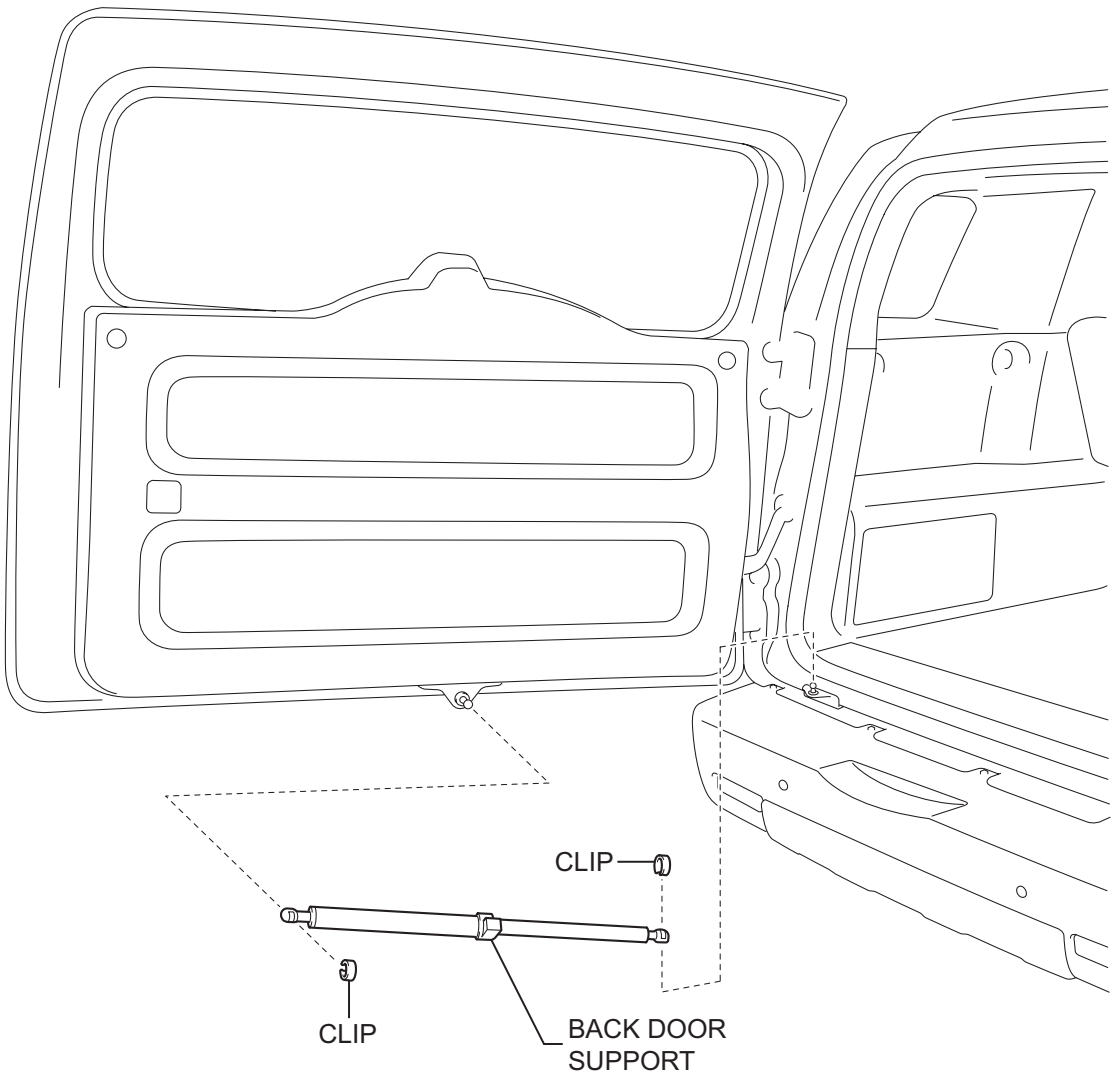

Y

B139383E01

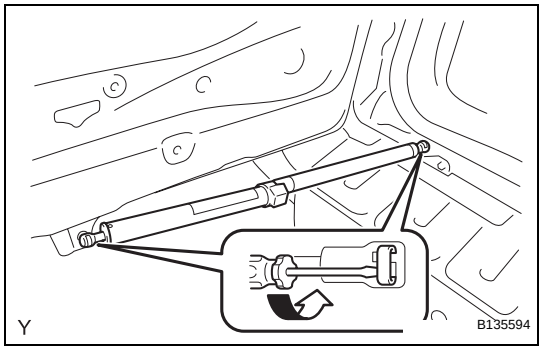

REMOVAL

1. REMOVE BACK DOOR SUPPORT

(a) Using a screwdriver with its tip wrapped in protective tape, remove the 2 stop rings and back door support.

NOTICE:

- **Do not touch the rod of the back door support with gloves, to avoid fibers from adhering.**
- **When foreign matter adheres to the rod, it prevents the rod from moving smoothly and reduces its holding power.**

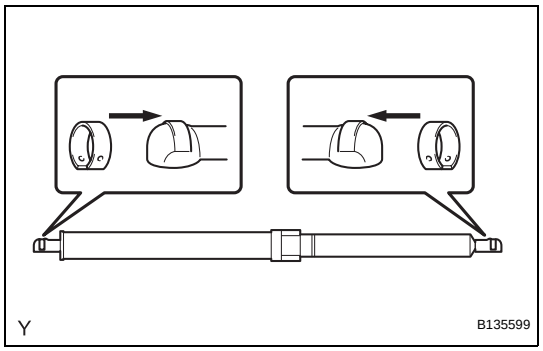

INSTALLATION

1. INSTALL BACK DOOR SUPPORT

(a) Install the 2 stop rings onto the back door support.

(b) Install the back door support.

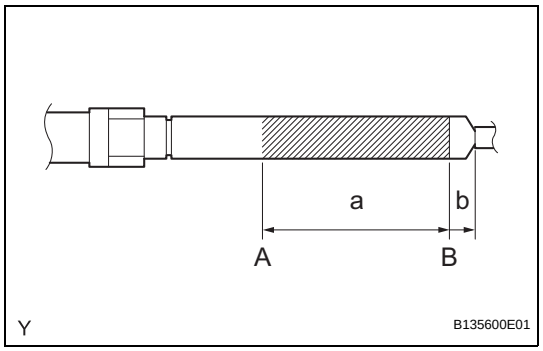

DISPOSAL

1. DISPOSE OF BACK DOOR SUPPORT

(a) Horizontally fix the back door support in a vise with the piston-rod pulled out.

(b) Wearing protective glasses, using a metal saw gradually cut the shaded part between A and B, shown in the illustration, to gradually release the gas.

Specification

Area	Measurement
a	80 mm (3.15 in.)
b	20 mm (0.80 in.)

CAUTION:

- **Cover the area that is being cut with a shop rag or a piece of cloth because there is a possibility that metal shards may be dispersed by the gas.**
- **The gas is colorless, odorless and harmless.**

BACK WINDOW SUPPORT

COMPONENTS

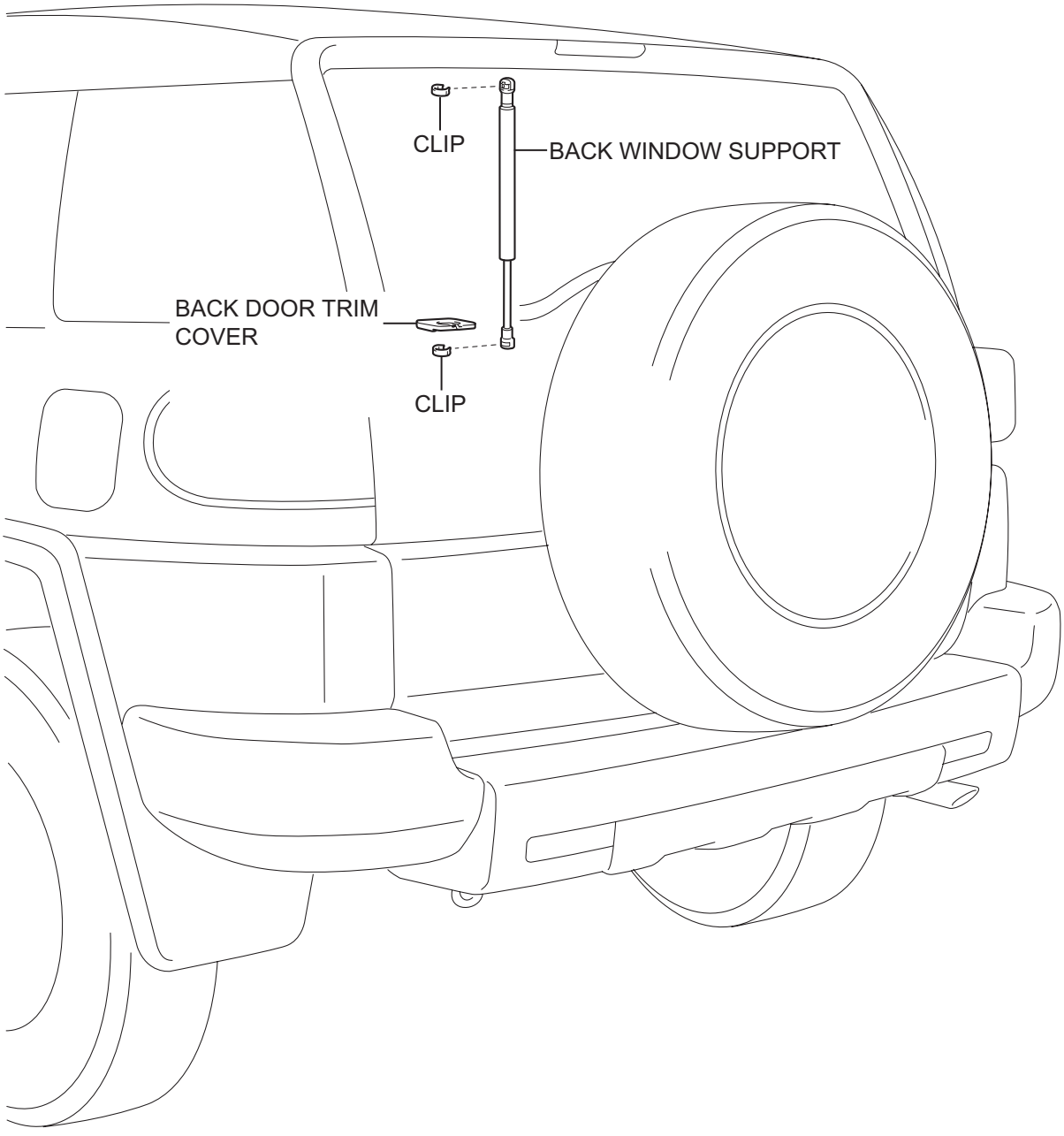

Y

B139384E01

REMOVAL

HINT:

- Use the same procedure for both the RH and LH sides.
- The procedure described below is for the LH side.

1. **REMOVE BACK DOOR TRIM COVER (See page ED-48)**

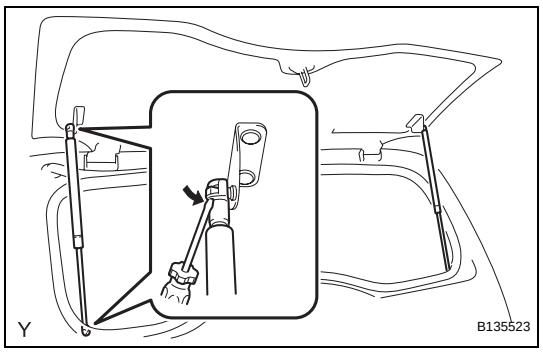

2. **REMOVE BACK WINDOW SUPPORT**
   (a) Using a screwdriver with its tip wrapped in protective tape, remove the 2 stop rings and back window support.
   NOTICE:
   - **Do not touch the rod of the back window support with gloves, to avoid fibers from adhering.**
   - **When foreign matter adheres to the rod, it prevents the rod from moving smoothly and reduces its holding power.**

   HINT:
   Support the back door glass by hand while removing the back window support.

INSTALLATION

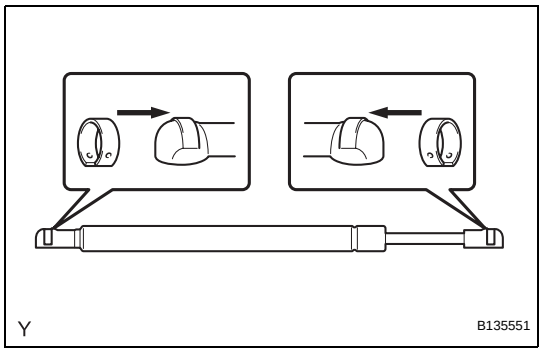

1. **INSTALL BACK WINDOW SUPPORT**
   (a) Install the 2 stop rings onto the back window support.
   (b) Install the back window support.

2. **INSTALL BACK DOOR TRIM COVER (See page ED-57)**

DISPOSAL

HINT:

- Use the same procedure for both the RH and LH sides.
- The procedure described below is for the LH side.

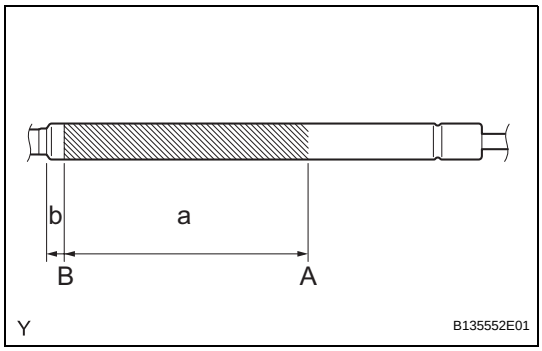

1. DISPOSE OF BACK WINDOW SUPPORT

(a) Horizontally fix the back window support in a vise with the piston-rod pulled out.

(b) Wearing protective glasses, using a metal saw gradually cut the shaded part between A and B, shown in the illustration, to gradually release the gas.

Specification

Area	Measurement
a	80 mm (3.15 in.)
b	20 mm (0.80 in.)

CAUTION:

- **Cover the area that is being cut with a shop rag or a piece of cloth because there is a possibility that metal shards may be dispersed by the gas.**
- **The gas is colorless, odorless and harmless.**

ENGINE

ON-VEHICLE INSPECTION

1. **INSPECT ENGINE COOLANT (See page CO-2)**
2. **INSPECT ENGINE OIL (See page LU-2)**
3. **INSPECT BATTERY (See page CH-4)**
4. **INSPECT AIR CLEANER FILTER ELEMENT SUB-ASSEMBLY**
5. **INSPECT SPARK PLUG (See page IG-5)**
6. **INSPECT FAN AND GENERATOR V BELT (See page EM-6)**
7. **INSPECT IGNITION TIMING**

NOTICE:

- **Turn all the electrical systems OFF.**
- **Conduct the inspection when the cooling fan motor is turned OFF.**

(a) Warm up the engine.

(b) When using the intelligent tester:

(1) Connect the intelligent tester to the DLC3.

(2) Select the following menu items: DIAGNOSIS / ENHANCED OBD II / DATA LIST / PRIMARY / IGN ADVANCE.

(3) Inspect the ignition timing during idling.

Ignition timing:

7 to 24°CA BTDC during idling

(Transmission in neutral position)

(4) Check that the ignition timing advances immediately when the engine speed is increased.

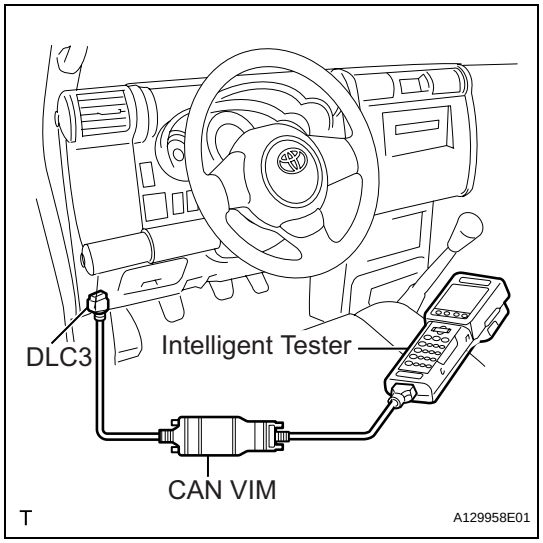

(c) When not using intelligent tester:

(1) Using SST, connect the terminals 13 (TC) and 4 (CG) of the DLC3.

SST 09843-18040

NOTICE:

Do not connect the terminals incorrectly as it causes breakage of the engine.

(2) Remove the air cleaner.

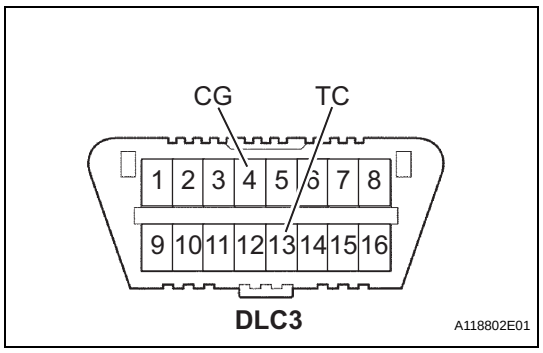

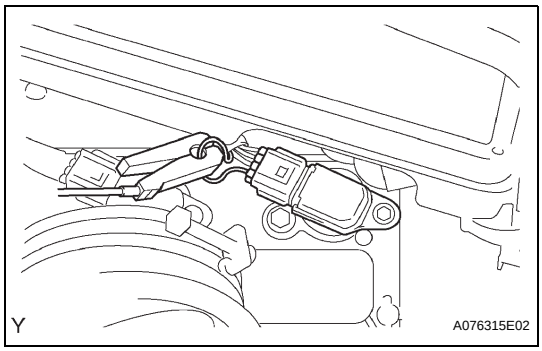

(3) Pull out the wire harness shown in the illustration.
(4) Connect the tester probe of a timing light to the wire of the ignition coil connector for the No. 1 cylinder.
NOTICE:
- **Use timing light that detects the first signal.**
- **After checking, wrap the wire harness with tape.**

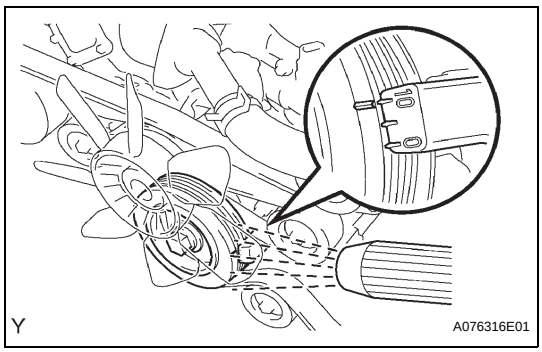

(5) Inspect the ignition timing during idling.
Ignition timing:
8 to 12°CA BTDC during idling (Transmission in neutral position)
(6) Remove SST from the DLC3.
(7) Inspect the ignition timing during idling.
Ignition timing:
7 to 24°CA BTDC during idling (Transmission in neutral position)
(8) Install the air cleaner.

8. INSPECT ENGINE IDLING SPEED
NOTICE:
- **Turn all the electrical systems OFF.**
- **Operate the inspection when the cooling fan motor is turned OFF.**

(a) Warm up the engine.

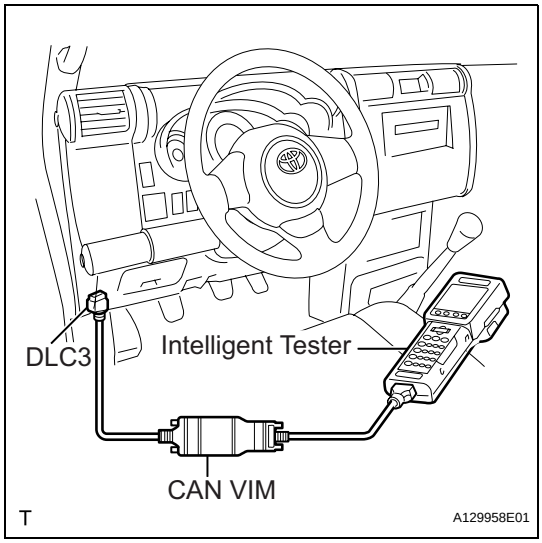

(b) When using the intelligent tester:
(1) Connect the intelligent tester to the DLC3.
(2) Select the following menu items: DIAGNOSIS / ENHANCED OBD ll / DATA LIST / PRIMARY / ENGINE SPD.
(3) Inspect the engine idling speed.
Idling speed:
650 to 750 rpm (Transmission in neutral position)

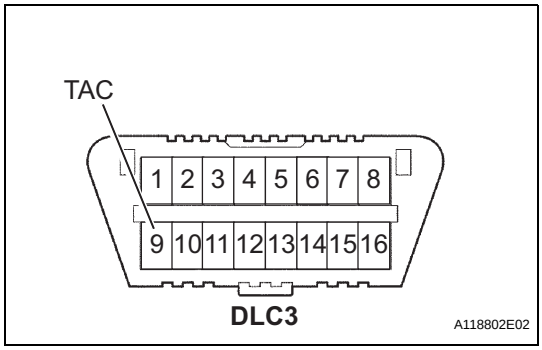

(c) When not using the intelligent tester:
(1) Using SST, connect the terminal 8 (TAC) of the DLC3.
SST 09843-18030
(2) Race the engine speed at 2,500 rpm for approximately 90 seconds.
(3) Inspect the engine idling speed.
Idling speed:
650 to 750 rpm (Transmission in neutral position)

9. INSPECT COMPRESSION

(a) Warm up and stop the engine.
(b) Remove the circuit opening relay (See page ES-443).
(c) Remove the V-bank cover (See page ES-414).
(d) Remove the air cleaner assembly (See page ES-429).
(e) Remove the throttle body bracket (See page FU-11).
(f) Remove the oil baffle plate (See page FU-11).
(g) Remove the No. 1 surge tank stay (See page FU-11).
(h) Remove the No. 2 surge tank stay (See page FU-12).
(i) Remove the ignition coils (See page IG-8).
(j) Remove the spark plugs.

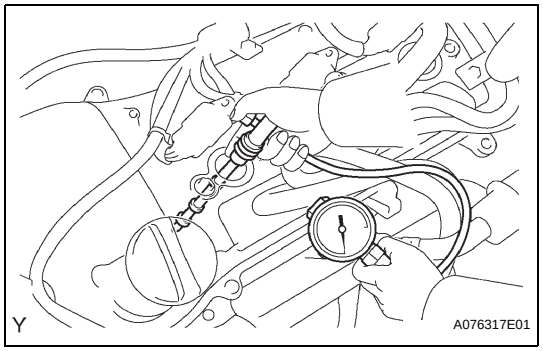

(k) Inspect the cylinder compression pressure.
(1) Insert a compression gauge into the spark plug hole. (*1)
SST 09992-00500
(2) Fully open the throttle. (*2)
(3) While cranking the engine, measure the compression pressure. (*3)
Compression pressure:
1,300 kPa (13.3 kgf/cm^2, 189 psi)
Minimum pressure:
1,000 kPa (10.2 kgf/cm^2, 145 psi)
Difference between cylinders:
100 kPa (1.0 kgf/cm^2, 15 psi)
NOTICE:
- **Use a fully-charged battery so the engine speed can be increased to 2,500 rpm or more.**
- **Inspect the other cylinders in the same way.**
- **Measure the compression in as short a time as possible.**

(4) If the cylinder compression is low, pour a small amount of engine oil into the cylinder through the spark plug hole and repeat steps (*1) through (*3) for cylinders with low compression.
- If adding oil increases the compression, the piston rings and/or cylinder bore may be worn or damaged.
- If the pressure stays low, a valve may be stuck or seated improperly, or there may be leakage from the gasket.

10. INSPECT CO/HC

(a) Start the engine.
(b) Run the engine at 2,500 rpm for approximately 180 seconds.
(c) Insert the CO/HC meter testing probe at least 40 cm (1.3 ft) into the tailpipe during idling.

EM

(d) Immediately check the CO/HC concentration during idling and/or while running at 2,500 rpm.
HINT:
- Complete the measurement within 3 minutes.
- When carrying out the 2 mode (with the engine idling/running at 2,500 rpm) test, the measurement orders are prescribed by the applicable local regulations.

(e) If the CO/HC concentration does not comply with regulations, troubleshoot in the order given below.
(1) Check the heated oxygen sensor operation.

CO	HC	Problems	Causes
Normal	High	Rough idling	1. Faulty ignition: – Incorrect timing – Fouled, shorted or improperly gapped plugs 2. Incorrect valve clearance 3. Leaking intake and exhaust valves 4. Leaking cylinders
Low	High	Rough idling (Fluctuating HC reading)	1. Vacuum leaks: – PCV hoses – Intake manifold – Throttle body – IAC valve – Brake booster line 2. Lean mixture causing misfire
High	High	Rough idling (Black smoke from exhaust)	1. Restricted air filter 2. Plugged PCV valve 3. Faulty EFI systems: – Faulty pressure regulator – Faulty engine coolant temperature sensor – Faulty mass air flow meter – Faulty ECM – Faulty injectors – Faulty throttle position sensor

DRIVE BELT

COMPONENTS

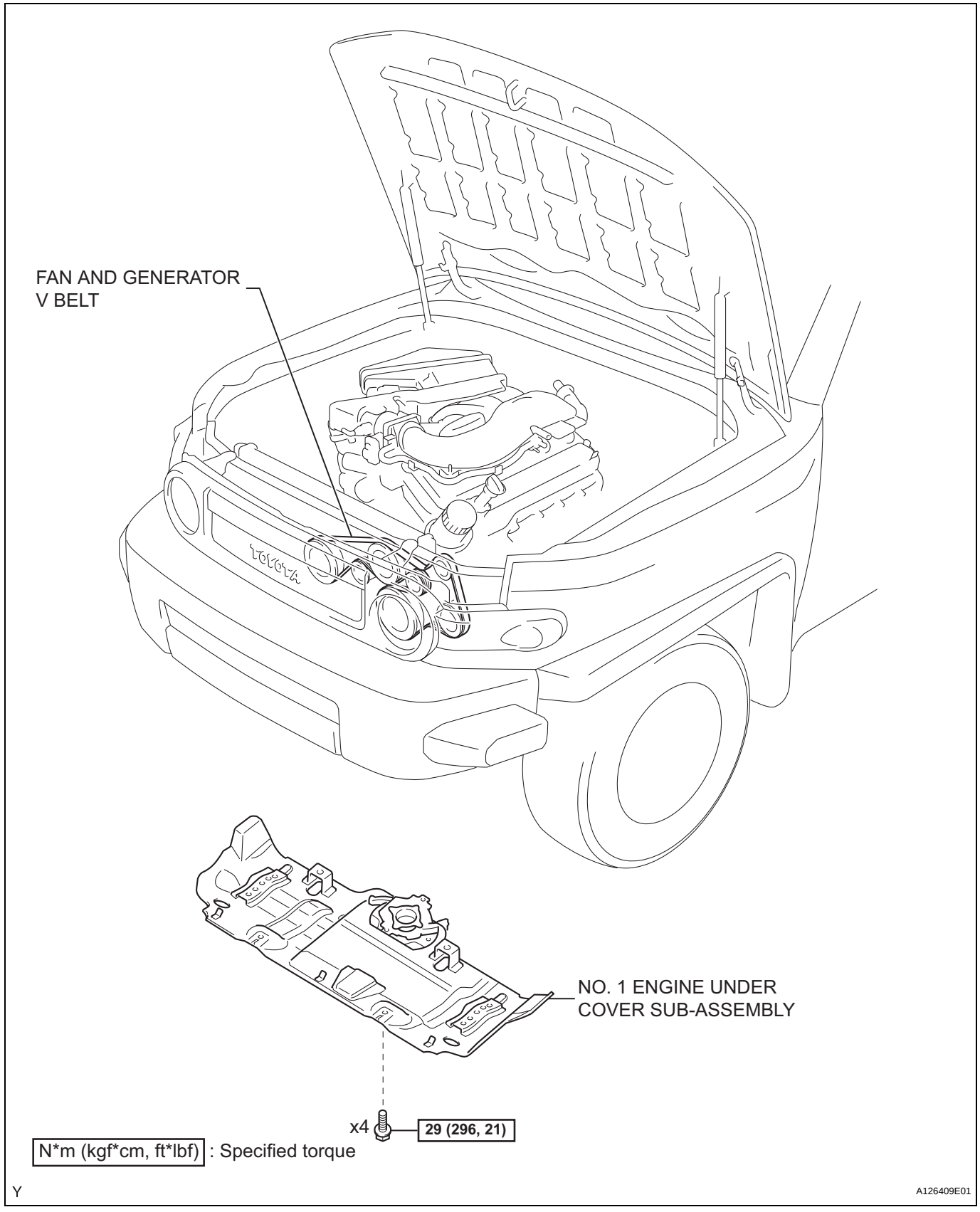

REMOVAL

1. REMOVE NO.1 ENGINE UNDER COVER SUB-ASSEMBLY

(a) Remove the 4 bolts, then remove the No. 1 engine under cover.

2. REMOVE FAN AND GENERATOR V BELT

(a) While releasing the belt tension by turning the belt tensioner counterclockwise, remove the V-ribbed belt from the belt tensioner.

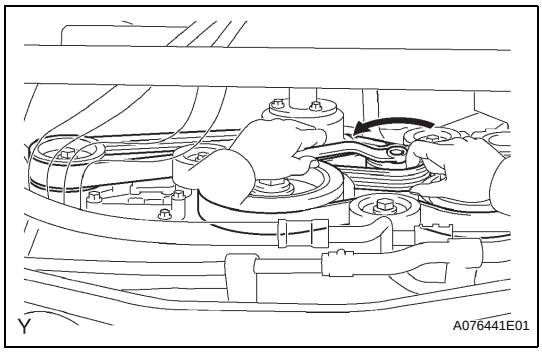

INSPECTION

1. INSPECT FAN AND GENERATOR V BELT

(a) Visually check the driver belt for excessive wear, frayed cords, etc. If any defect is found, replace the drive belt.

HINT:

Cracks on the rib side of the drive belt are considered acceptable. If the drive belt has chunks missing from the ribs, it should be replaced.

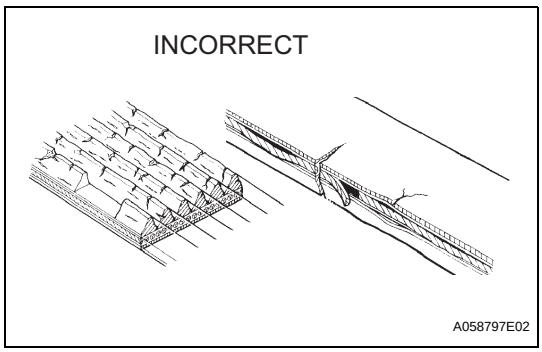

INSTALLATION

1. INSPECT V-RIBBED BELT TENSIONER ASSEMBLY

(a) Check that nothing gets caught in the tensioner by turning it clockwise and counterclockwise.
If a malfunction exists, replace the tensioner.

2. INSTALL FAN AND GENERATOR V BELT

(a) While turning the belt tensioner counterclockwise, align the holes as shown, and then insert a bar of 6 mm (0.24 in.) into the holes to fix the belt tensioner.

(b) Install the V-ribbed belt.

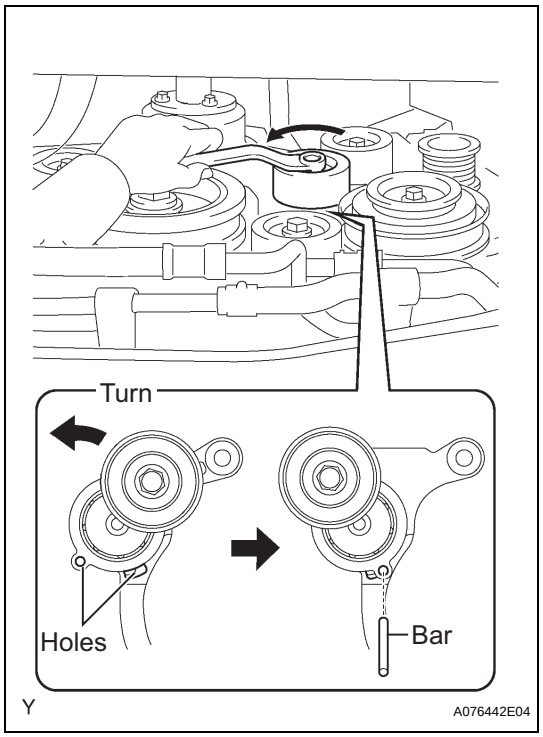

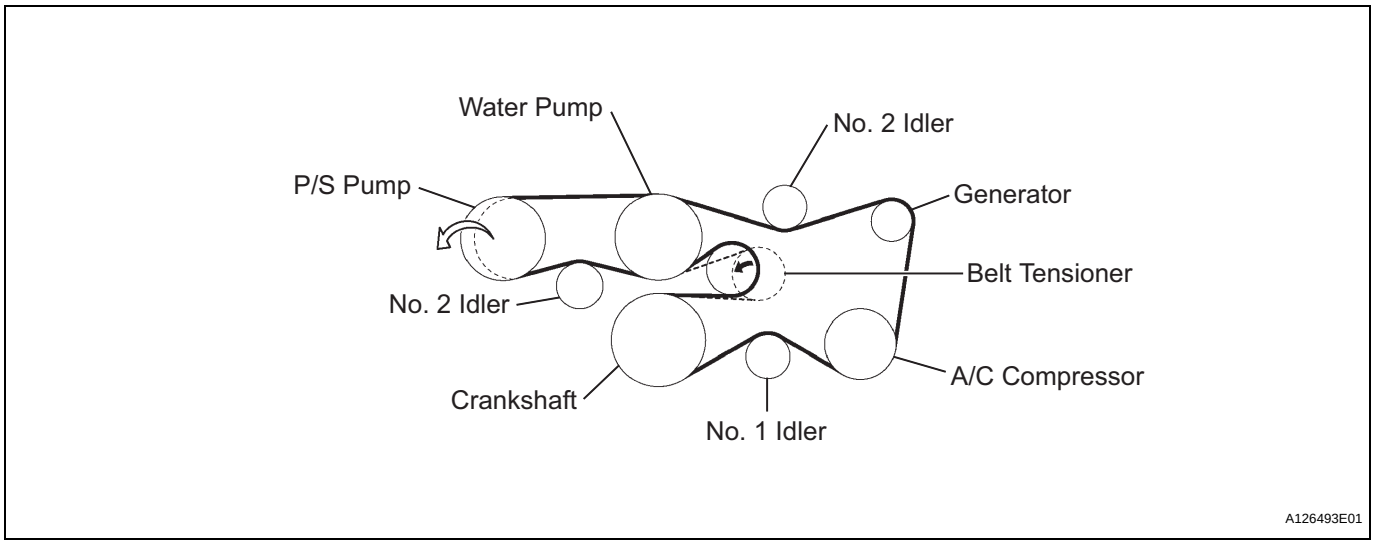

(c) While turning the belt tensioner counterclockwise, remove the bar.

(d) If it is hard to install the V-ribbed belt, perform the following procedure:

(1) Put the V-ribbed belt on all parts except the P/S pump, as shown in the illustration.

(2) While releasing the belt tension by turning the belt tensioner counterclockwise, put the V-ribbed belt on the P/S pump.

3. INSTALL NO. 1 ENGINE UNDER COVER SUB-ASSEMBLY

(a) Install the No. 1 engine under cover with the 4 bolts.
Torque: 29 N*m (296 kgf*cm, 21 ft.*lbf)

VALVE CLEARANCE

ADJUSTMENT

1. **DISCONNECT CABLE FROM NEGATIVE BATTERY TERMINAL**
2. **DRAIN ENGINE COOLANT (See page CO-3)**
3. **REMOVE V-BANK COVER (See page ES-428)**
4. **REMOVE AIR CLEANER ASSEMBLY (See page ES-429)**
5. **REMOVE THROTTLE BODY BRACKET (See page FU-11)**
6. **REMOVE OIL BAFFLE PLATE (See page FU-11)**
7. **REMOVE NO. 1 SURGE TANK STAY (See page FU-11)**
8. **REMOVE NO. 2 SURGE TANK STAY (See page FU-12)**
9. **REMOVE INTAKE AIR SURGE TANK (See page FU-12)**
10. **REMOVE IGNITION COIL ASSEMBLY (See page IG-8)**
11. **REMOVE CYLINDER HEAD COVER SUB-ASSEMBLY (See page EM-40)**
12. **REMOVE CYLINDER HEAD COVER SUB-ASSEMBLY LH (See page EM-40)**
13. **SET NO. 1 CYLINDER TO TDC/COMPRESSION**
    (a) Turn the crankshaft pulley until its groove and the "0" timing mark of the timing chain cover are aligned.

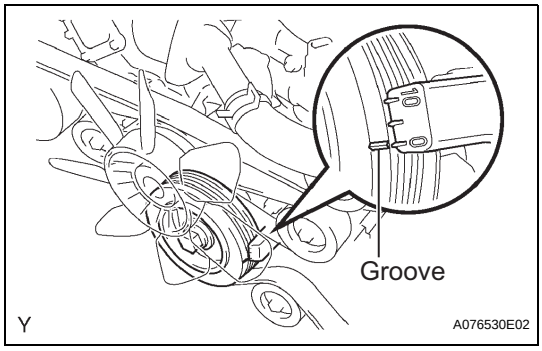

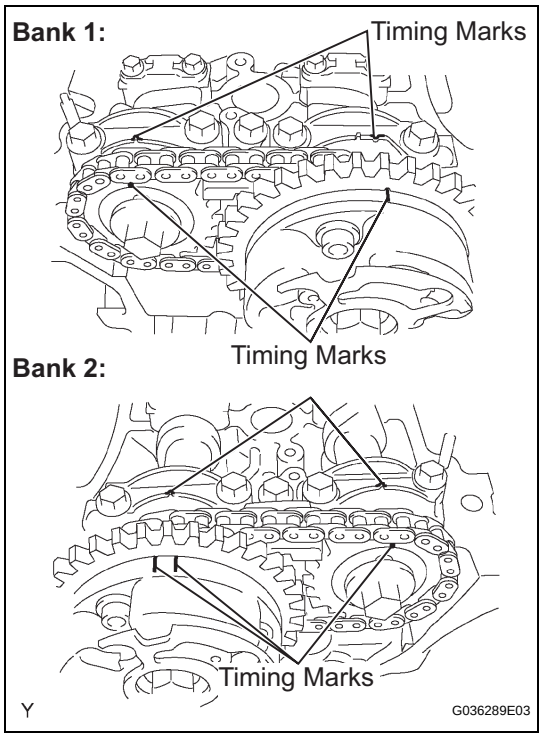

(b) Check that the timing marks of the camshaft timing gears are aligned with the timing marks of the bearing caps as shown in the illustration.
If not, turn the crankshaft 1 complete revolution (360°) and align the timing marks above.

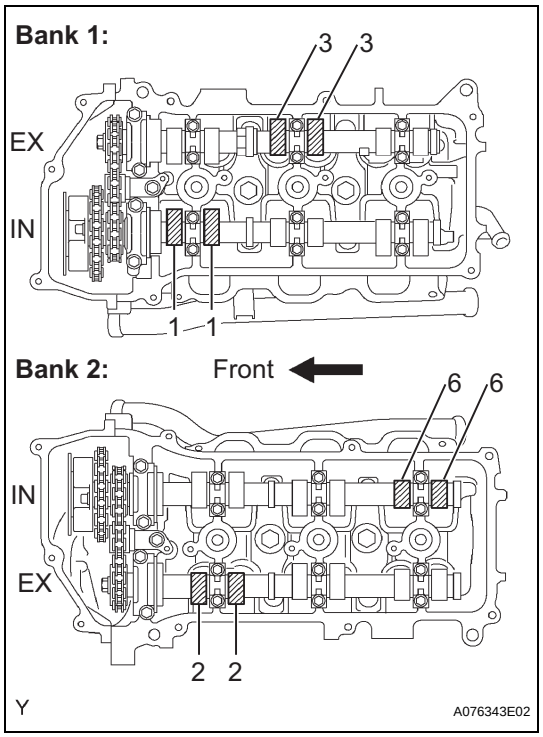

14. INSPECT VALVE CLEARANCE

(a) Check the valves indicated in the illustration.

(1) Using a feeler gauge, measure the clearance between the valve lifter and camshaft.
Valve clearance (Cold):
Intake 0.15 to 0.25 mm (0.006 to 0.010 in.)
Exhaust 0.29 to 0.39 mm (0.011 to 0.015 in.)

(2) Record any out-of-specification valve clearance measurements. They will be used later to determine the required replacement valve lifter.

EM

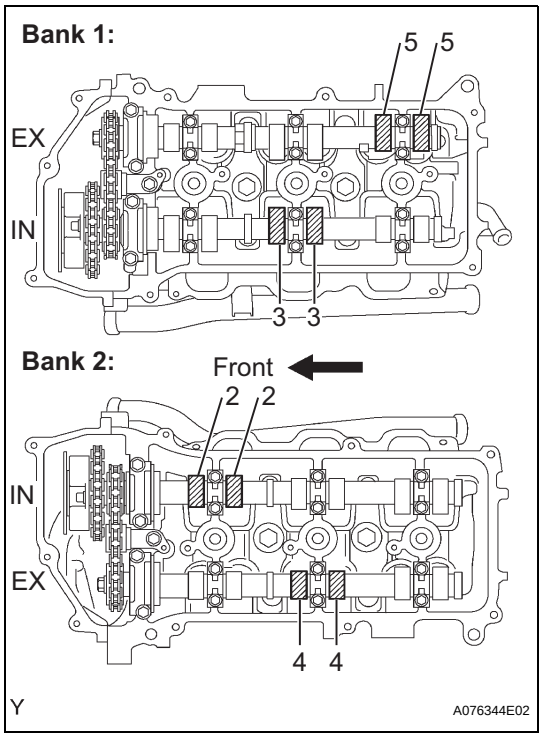

(b) Turn the crankshaft 240° clockwise, and check the valves indicated in the illustration.
(1) Using a feeler gauge, measure the clearance between the valve lifter and camshaft.
Valve clearance (Cold):
Intake 0.15 to 0.25 mm (0.006 to 0.010 in.)
Exhaust 0.29 to 0.39 mm (0.011 to 0.015 in.)
(2) Record any out-of-specification valve clearance measurements. They will be used later to determine the required replacement valve lifter.

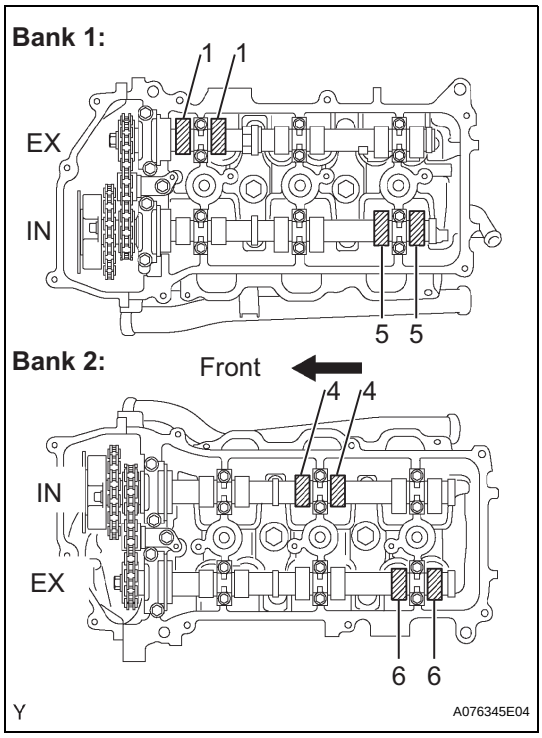

(c) Turn the crankshaft 240° clockwise, and check the valves indicated in the illustration.
(1) Using a feeler gauge, measure the clearance between the valve lifter and camshaft.
(2) Valve clearance (Cold):
Intake 0.15 to 0.25 mm (0.006 to 0.010 in.)
Exhaust 0.29 to 0.39 mm (0.011 to 0.015 in.)
Record any out-of-specification valve clearance measurements. They will be used later to determine the required replacement valve lifter.

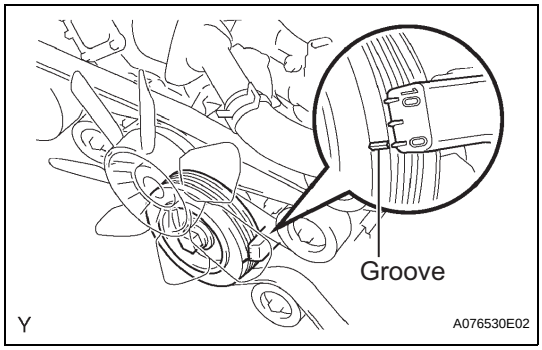

15. ADJUST VALVE CLEARANCE
(a) Set the No. 1 cylinder to TDC/compression.
(1) Turn the crankshaft pulley until its groove and the "0" timing mark of the timing chain cover are aligned.

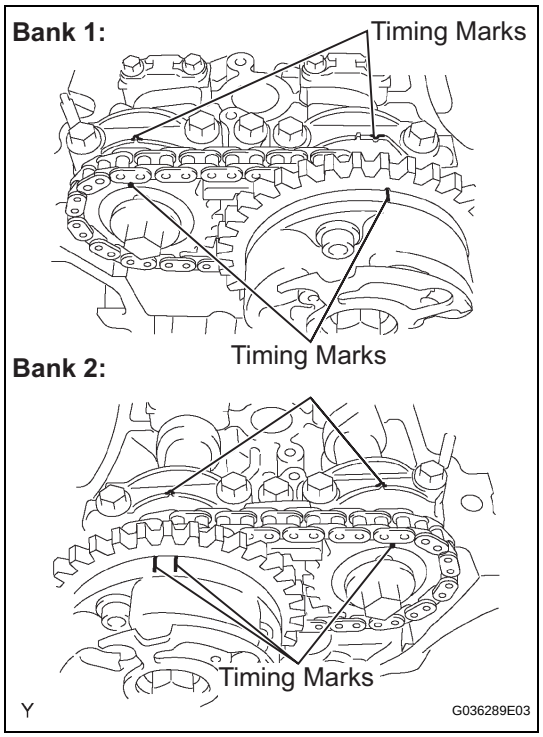

(2) Check that the timing marks of the camshaft timing gears are aligned with the timing marks of the bearing caps as shown in the illustration. If not, turn the crankshaft 1 complete revolution (360°) and align the timing marks as above.

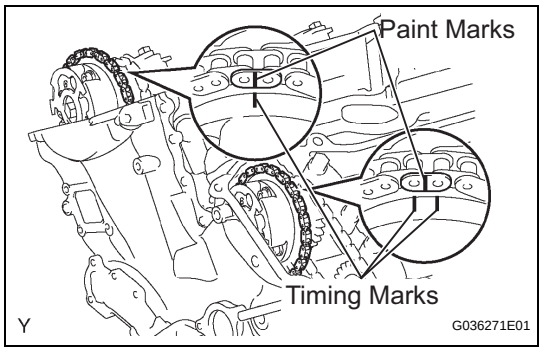

(3) Place paint marks on the No. 1 chain links corresponding to the timing marks of the camshaft timing gears.

(b) Remove the No. 1 chain tensioner assembly.
(c) Remove the No. 2 camshaft.
(d) Remove the No. 2 chain tensioner assembly.
(e) Remove the camshaft.
(f) Remove the No. 4 camshaft sub-assembly.
(g) Remove the No. 3 chain tensioner assembly.
(h) Remove the No. 3 camshaft sub-assembly.
(i) Remove the valve lifters.

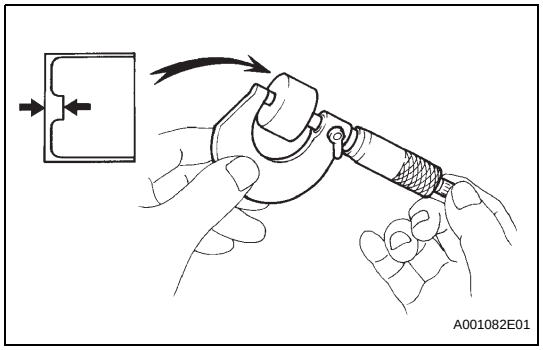

(j) Determine the replacement valve lifter size according to the following formulas and charts:
(1) Using a micrometer, measure the thickness of the removed lifter.
(2) Calculate the thickness of a new lifter so that the valve clearance comes within the specified value.

T:
Thickness of removed lifter
A:
Measured valve clearance
N:
Thickness of new lifter
Intake:
N = T + (A - 0.20 mm (0.008 in.))
Exhaust:
N = T + (A - 0.34 mm (0.013 in.))

EM

(3) Select a new lifter with a thickness as close as possible to the calculated value.
HINT:
Lifters are available in 35 sizes in increments of 0.020 mm (0.0008 in.), from 5.060 mm (0.1992 in.) to 5.740 mm (0.2260 in.).

Valve Lifter Selection Chart (Intake)

Installed Lifter Thickness mm(in.) \ Measured Clearance mm(in.)	0.000 - 0.020 (0.0000 - 0.0008)	0.021 - 0.040 (0.0008 - 0.0016)	0.041 - 0.060 (0.0016 - 0.0024)	0.061 - 0.080 (0.0024 - 0.0031)	0.081 - 0.100 (0.0032 - 0.0039)	0.101 - 0.120 (0.0040 - 0.0047)	0.121 - 0.140 (0.0048 - 0.0055)	0.141 - 0.149 (0.0056 - 0.0059)	0.251 - 0.270 (0.0099 - 0.0106)	0.271 - 0.290 (0.0107 - 0.0114)	0.291 - 0.310 (0.0115 - 0.0122)	0.311 - 0.330 (0.0122 - 0.0130)	0.331 - 0.350 (0.0130 - 0.0138)	0.351 - 0.370 (0.0138 - 0.0146)	0.371 - 0.390 (0.0146 - 0.0154)	0.391 - 0.410 (0.0154 - 0.0161)	0.411 - 0.430 (0.0162 - 0.0169)	0.431 - 0.450 (0.0170 - 0.0177)	0.451 - 0.470 (0.0178 - 0.0185)	0.471 - 0.490 (0.0185 - 0.0193)	0.491 - 0.510 (0.0193 - 0.0201)	0.511 - 0.530 (0.0201 - 0.0209)	0.531 - 0.550 (0.0209 - 0.0217)	0.551 - 0.570 (0.0217 - 0.0224)	0.571 - 0.590 (0.0225 - 0.0232)	0.591 - 0.610 (0.0233 - 0.0240)	0.611 - 0.630 (0.0241 - 0.0248)	0.631 - 0.650 (0.0248 - 0.0256)	0.651 - 0.670 (0.0256 - 0.0264)	0.671 - 0.690 (0.0264 - 0.0272)	0.691 - 0.710 (0.0272 - 0.0280)	0.711 - 0.730 (0.0280 - 0.0287)	0.731 - 0.750 (0.0288 - 0.0295)	0.751 - 0.770 (0.0296 - 0.0303)	0.771 - 0.790 (0.0304 - 0.0311)	0.791 - 0.810 (0.0311 - 0.0319)	0.811 - 0.830 (0.0319 - 0.0327)	0.831 - 0.850 (0.0327 - 0.0335)	0.851 - 0.870 (0.0335 - 0.0343)
5.060 (0.1992)									12	14	16	18	20	22	24	26	28	30	32	34	36	38	40	42	44	46	48	50	52	54	56	58	60	62	64	66	68	70	72
5.080 (0.2000)									14	16	18	20	22	24	26	28	30	32	34	36	38	40	42	44	46	48	50	52	54	56	58	60	62	64	66	68	70	72	
5.100 (0.2008)									16	18	20	22	24	26	28	30	32	34	36	38	40	42	44	46	48	50	52	54	56	58	60	62	64	66	68	70	72		
5.120 (0.2016)								6	18	20	22	24	26	28	30	32	34	36	38	40	42	44	46	48	50	52	54	56	58	60	62	64	66	68	70	72			
5.140 (0.2024)							8	8	20	22	24	26	28	30	32	34	36	38	40	42	44	46	48	50	52	54	56	58	60	62	64	66	68	70	72				
5.160 (0.2031)						8	10	10	22	24	26	28	30	32	34	36	38	40	42	44	46	48	50	52	54	56	58	60	62	64	66	68	70	72					
5.180 (0.2039)					8	10	12	12	24	26	28	30	32	34	36	38	40	42	44	46	48	50	52	54	56	58	60	62	64	66	68	70	72						
5.200 (0.2047)				8	10	12	14	14	26	28	30	32	34	36	38	40	42	44	46	48	50	52	54	56	58	60	62	64	66	68	70	72							
5.210 (0.2051)			6	8	10	12	14	16	28	30	32	34	36	38	40	42	44	46	48	50	52	54	56	58	60	62	64	66	68	70	72	74							
5.220 (0.2055)			8	10	12	14	16	16	28	30	32	34	36	38	40	42	44	46	48	50	52	54	56	58	60	62	64	66	68	70	72								
5.230 (0.2059)		6	8	10	12	14	16	18	30	32	34	36	38	40	42	44	46	48	50	52	54	56	58	60	62	64	66	68	70	72	74								
5.240 (0.2063)		8	10	12	14	16	18	18	30	32	34	36	38	40	42	44	46	48	50	52	54	56	58	60	62	64	66	68	70	72									
5.250 (0.2067)	6	8	10	12	14	16	18	20	32	34	36	38	40	42	44	46	48	50	52	54	56	58	60	62	64	66	68	70	72	74									
5.260 (0.2071)	8	10	12	14	16	18	20	20	32	34	36	38	40	42	44	46	48	50	52	54	56	58	60	62	64	66	68	70	72										
5.270 (0.2075)	8	10	12	14	16	18	20	22	34	36	38	40	42	44	46	48	50	52	54	56	58	60	62	64	66	68	70	72	74										
5.280 (0.2079)	10	12	14	16	18	20	22	22	34	36	38	40	42	44	46	48	50	52	54	56	58	60	62	64	66	68	70	72											
5.290 (0.2083)	10	12	14	16	18	20	22	24	36	38	40	42	44	46	48	50	52	54	56	58	60	62	64	66	68	70	72	74											
5.300 (0.2087)	12	14	16	18	20	22	24	24	36	38	40	42	44	46	48	50	52	54	56	58	60	62	64	66	68	70	72												
5.310 (0.2091)	12	14	16	18	20	22	24	26	38	40	42	44	46	48	50	52	54	56	58	60	62	64	66	68	70	72	74												
5.320 (0.2094)	14	16	18	20	22	24	26	26	38	40	42	44	46	48	50	52	54	56	58	60	62	64	66	68	70	72													
5.330 (0.2098)	14	16	18	20	22	24	26	28	40	42	44	46	48	50	52	54	56	58	60	62	64	66	68	70	72	74													
5.340 (0.2102)	16	18	20	22	24	26	28	28	40	42	44	46	48	50	52	54	56	58	60	62	64	66	68	70	72														
5.350 (0.2106)	16	18	20	22	24	26	28	30	42	44	46	48	50	52	54	56	58	60	62	64	66	68	70	72	74														
5.360 (0.2110)	18	20	22	24	26	28	30	30	42	44	46	48	50	52	54	56	58	60	62	64	66	68	70	72															
5.370 (0.2114)	18	20	22	24	26	28	30	32	44	46	48	50	52	54	56	58	60	62	64	66	68	70	72	74															
5.380 (0.2118)	20	22	24	26	28	30	32	32	44	46	48	50	52	54	56	58	60	62	64	66	68	70	72																
5.390 (0.2122)	20	22	24	26	28	30	32	34	46	48	50	52	54	56	58	60	62	64	66	68	70	72	74																
5.400 (0.2126)	22	24	26	28	30	32	34	34	46	48	50	52	54	56	58	60	62	64	66	68	70	72																	
5.410 (0.2130)	22	24	26	28	30	32	34	36	48	50	52	54	56	58	60	62	64	66	68	70	72	74																	
5.420 (0.2134)	24	26	28	30	32	34	36	36	48	50	52	54	56	58	60	62	64	66	68	70	72																		
5.430 (0.2138)	24	26	28	30	32	34	36	38	50	52	54	56	58	60	62	64	66	68	70	72	74																		
5.440 (0.2142)	26	28	30	32	34	36	38	38	50	52	54	56	58	60	62	64	66	68	70	72																			
5.450 (0.2146)	26	28	30	32	34	36	38	40	52	54	56	58	60	62	64	66	68	70	72	74																			
5.460 (0.2150)	28	30	32	34	36	38	40	40	52	54	56	58	60	62	64	66	68	70	72																				
5.470 (0.2154)	28	30	32	34	36	38	40	42	54	56	58	60	62	64	66	68	70	72	74																				
5.480 (0.2157)	30	32	34	36	38	40	42	42	54	56	58	60	62	64	66	68	70	72																					
5.490 (0.2161)	30	32	34	36	38	40	42	44	56	58	60	62	64	66	68	70	72	74																					
5.500 (0.2165)	32	34	36	38	40	42	44	44	56	58	60	62	64	66	68	70	72																						
5.510 (0.2169)	32	34	36	38	40	42	44	46	58	60	62	64	66	68	70	72	74																						
5.520 (0.2173)	34	36	38	40	42	44	46	46	58	60	62	64	66	68	70	72																							
5.530 (0.2177)	34	36	38	40	42	44	46	48	60	62	64	66	68	70	72	74																							
5.540 (0.2181)	36	38	40	42	44	46	48	48	60	62	64	66	68	70	72																								
5.550 (0.2185)	36	38	40	42	44	46	48	50	62	64	66	68	70	72	74																								
5.560 (0.2189)	38	40	42	44	46	48	50	50	62	64	66	68	70	72																									
5.580 (0.2197)	40	42	44	46	48	50	52	52	64	66	68	70	72																										
5.600 (0.2205)	42	44	46	48	50	52	54	54	66	68	70	72																											
5.620 (0.2213)	44	46	48	50	52	54	56	56	68	70	72																												
5.640 (0.2220)	46	48	50	52	54	56	58	58	70	72																													
5.660 (0.2228)	48	50	52	54	56	58	60	60	72																														
5.680 (0.2236)	50	52	54	56	58	60	62	62																															
5.700 (0.2244)	52	54	56	58	60	62	64	64																															
5.720 (0.2252)	54	56	58	60	62	64	66	66																															
5.740 (0.2260)	56	58	60	62	64	66	68	68																															

EM

Y

A126377E01

EM

Valve Lifter Selection Chart (Exhaust)

Installed Lifter Thickness mm(in.) \ Measured Clearance mm(in.)	0.000 - 0.020 (0.0000 - 0.0008)	0.021 - 0.040 (0.0008 - 0.0016)	0.041 - 0.060 (0.0016 - 0.0024)	0.061 - 0.080 (0.0024 - 0.0031)	0.081 - 0.100 (0.0032 - 0.0039)	0.101 - 0.120 (0.0040 - 0.0047)	0.121 - 0.140 (0.0048 - 0.0055)	0.141 - 0.160 (0.0056 - 0.0063)	0.161 - 0.180 (0.0063 - 0.0071)	0.181 - 0.200 (0.0071 - 0.0079)	0.201 - 0.220 (0.0079 - 0.0087)	0.221 - 0.240 (0.0087 - 0.0094)	0.241 - 0.260 (0.0095 - 0.0102)	0.261 - 0.280 (0.0103 - 0.0110)	0.281 - 0.289 (0.0111 - 0.0114)	0.391 - 0.410 (0.0154 - 0.0161)	0.411 - 0.430 (0.0162 - 0.0169)	0.431 - 0.450 (0.0170 - 0.0177)	0.451 - 0.470 (0.0178 - 0.0185)	0.471 - 0.490 (0.0185 - 0.0193)	0.491 - 0.510 (0.0193 - 0.0201)	0.511 - 0.530 (0.0201 - 0.0209)	0.531 - 0.550 (0.0209 - 0.0217)	0.551 - 0.570 (0.0217 - 0.0224)	0.571 - 0.590 (0.0225 - 0.0232)	0.591 - 0.610 (0.0233 - 0.0240)	0.611 - 0.630 (0.0241 - 0.0248)	0.631 - 0.650 (0.0248 - 0.0256)	0.651 - 0.670 (0.0256 - 0.0264)	0.671 - 0.690 (0.0264 - 0.0272)	0.691 - 0.710 (0.0272 - 0.0280)	0.711 - 0.730 (0.0280 - 0.0287)	0.731 - 0.750 (0.0288 - 0.0295)	0.751 - 0.770 (0.0296 - 0.0303)	0.771 - 0.790 (0.0304 - 0.0311)	0.791 - 0.810 (0.0311 - 0.0319)	0.811 - 0.830 (0.0319 - 0.0327)	0.831 - 0.850 (0.0327 - 0.0335)	0.851 - 0.870 (0.0335 - 0.0343)	0.871 - 0.890 (0.0343 - 0.0350)	0.891 - 0.910 (0.0351 - 0.0358)	0.911 - 0.930 (0.0359 - 0.0366)	0.931 - 0.950 (0.0367 - 0.0374)	0.951 - 0.970 (0.0374 - 0.0382)	0.971 - 0.990 (0.0382 - 0.0390)	0.991 - 1.010 (0.0390 - 0.0398)
5.060 (0.1992)																12	14	16	18	20	22	24	56	28	30	32	34	36	38	40	42	44	46	48	50	52	54	56	58	60	62	64	66	68	70	72
5.080 (0.2000)																14	16	18	20	22	24	56	28	30	32	34	36	38	40	42	44	46	48	50	52	54	56	58	60	62	64	66	68	70	72	
5.100 (0.2008)																16	18	20	22	24	56	28	30	32	34	36	38	40	42	44	46	48	50	52	54	56	58	60	62	64	66	68	70	72		
5.120 (0.2016)															6	18	20	22	24	56	28	30	32	34	36	38	40	42	44	46	48	50	52	54	56	58	60	62	64	66	68	70	72			
5.140 (0.2024)														8	8	20	22	24	56	28	30	32	34	36	38	40	42	44	46	48	50	52	54	56	58	60	62	64	66	68	70	72				
5.160 (0.2031)													8	10	10	22	24	56	28	30	32	34	36	38	40	42	44	46	48	50	52	54	56	58	60	62	64	66	68	70	72					
5.180 (0.2039)												8	10	12	12	24	56	28	30	32	34	36	38	40	42	44	46	48	50	52	54	56	58	60	62	64	66	68	70	72						
5.200 (0.2047)											8	10	12	14	14	56	28	30	32	34	36	38	40	42	44	46	48	50	52	54	56	58	60	62	64	66	68	70	72							
5.210 (0.2051)										6	8	10	12	14	16	28	30	32	34	36	38	40	42	44	46	48	50	52	54	56	58	60	62	64	66	68	70	72	74						
5.220 (0.2055)										8	10	12	14	16	16	28	30	32	34	36	38	40	42	44	46	48	50	52	54	56	58	60	62	64	66	68	70	72							
5.230 (0.2059)									6	8	10	12	14	16	18	30	32	34	36	38	40	42	44	46	48	50	52	54	56	58	60	62	64	66	68	70	72	74						
5.240 (0.2063)									8	10	12	14	16	18	18	30	32	34	36	38	40	42	44	46	48	50	52	54	56	58	60	62	64	66	68	70	72							
5.250 (0.2067)								6	8	10	12	14	16	18	20	32	34	36	38	40	42	44	46	48	50	52	54	56	58	60	62	64	66	68	70	72	74						
5.260 (0.2071)								8	10	12	14	16	18	20	20	32	34	36	38	40	42	44	46	48	50	52	54	56	58	60	62	64	66	68	70	72							
5.270 (0.2075)							6	8	10	12	14	16	18	20	22	34	36	38	40	42	44	46	48	50	52	54	56	58	60	62	64	66	68	70	72	74						
5.280 (0.2079)							8	10	12	14	16	18	20	22	22	34	36	38	40	42	44	46	48	50	52	54	56	58	60	62	64	66	68	70	72							
5.290 (0.2083)						6	8	10	12	14	16	18	20	22	24	36	38	40	42	44	46	48	50	52	54	56	58	60	62	64	66	68	70	72	74							
5.300 (0.2087)						8	10	12	14	16	18	20	22	24	24	36	38	40	42	44	46	48	50	52	54	56	58	60	62	64	66	68	70	72								
5.310 (0.2091)					6	8	10	12	14	16	18	20	22	24	26	38	40	42	44	46	48	50	52	54	56	58	60	62	64	66	68	70	72	74								
5.320 (0.2094)					8	10	12	14	16	18	20	22	24	26	26	38	40	42	44	46	48	50	52	54	56	58	60	62	64	66	68	70	72									
5.330 (0.2098)				6	8	10	12	14	16	18	20	22	24	56	28	40	42	44	46	48	50	52	54	56	58	60	62	64	66	68	70	72	74									
5.340 (0.2102)				8	10	12	14	16	18	20	22	24	26	28	28	40	42	44	46	48	50	52	54	56	58	60	62	64	66	68	70	72										
5.350 (0.2106)			6	8	10	12	14	16	18	20	22	24	56	28	30	42	44	46	48	50	52	54	56	58	60	62	64	66	68	70	72	74										
5.360 (0.2110)			8	10	12	14	16	18	20	22	24	26	28	30	30	42	44	46	48	50	52	54	56	58	60	62	64	66	68	70	72											
5.370 (0.2114)		6	8	10	12	14	16	18	20	22	24	56	28	30	32	44	46	48	50	52	54	56	58	60	62	64	66	68	70	72	74											
5.380 (0.2118)		8	10	12	14	16	18	20	22	24	26	28	30	32	32	44	46	48	50	52	54	56	58	60	62	64	66	68	70	72												
5.390 (0.2122)	6	8	10	12	14	16	18	20	22	24	56	28	30	32	34	46	48	50	52	54	56	58	60	62	64	66	68	70	72	74												
5.400 (0.2126)	8	10	12	14	16	18	20	22	24	26	28	30	32	34	34	46	48	50	52	54	56	58	60	62	64	66	68	70	72													
5.410 (0.2130)	8	10	12	14	16	18	20	22	24	56	28	30	32	34	36	48	50	52	54	56	58	60	62	64	66	68	70	72	74													
5.420 (0.2134)	10	12	14	16	18	20	22	24	26	28	30	32	34	36	36	48	50	52	54	56	58	60	62	64	66	68	70	72														
5.430 (0.2138)	10	12	14	16	18	20	22	24	56	28	30	32	34	36	38	50	52	54	56	58	60	62	64	66	68	70	72	74														
5.440 (0.2142)	12	14	16	18	20	22	24	26	28	30	32	34	36	38	38	50	52	54	56	58	60	62	64	66	68	70	72															
5.450 (0.2146)	12	14	16	18	20	22	24	56	28	30	32	34	36	38	40	52	54	56	58	60	62	64	66	68	70	72	74															
5.460 (0.2150)	14	16	18	20	22	24	26	28	30	32	34	36	38	40	40	52	54	56	58	60	62	64	66	68	70	72																
5.470 (0.2154)	14	16	18	20	22	24	56	28	30	32	34	36	38	40	42	54	56	58	60	62	64	66	68	70	72	74																
5.480 (0.2157)	16	18	20	22	24	26	28	30	32	34	36	38	40	42	42	54	56	58	60	62	64	66	68	70	72																	
5.490 (0.2161)	16	18	20	22	24	56	28	30	32	34	36	38	40	42	44	56	58	60	62	64	66	68	70	72	74																	
5.500 (0.2165)	18	20	22	24	26	28	30	32	34	36	38	40	42	44	44	56	58	60	62	64	66	68	70	72																		
5.510 (0.2169)	18	20	22	24	56	28	30	32	34	36	38	40	42	44	46	58	60	62	64	66	68	70	72	74																		
5.520 (0.2173)	20	22	24	26	28	30	32	34	36	38	40	42	44	46	46	58	60	62	64	66	68	70	72																			
5.530 (0.2177)	20	22	24	56	28	30	32	34	36	38	40	42	44	46	48	60	62	64	66	68	70	72	74																			
5.540 (0.2181)	22	24	26	28	30	32	34	36	38	40	42	44	46	48	48	60	62	64	66	68	70	72																				
5.550 (0.2185)	22	24	56	28	30	32	34	36	38	40	42	44	46	48	50	62	64	66	68	70	72	74																				
5.560 (0.2189)	24	26	28	30	32	34	36	38	40	42	44	46	48	50	50	62	64	66	68	70	72																					
5.580 (0.2197)	26	28	30	32	34	36	38	40	42	44	46	48	50	52	52	64	66	68	70	72																						
5.600 (0.2205)	28	30	32	34	36	38	40	42	44	46	48	50	52	54	54	66	68	70	72																							
5.620 (0.2213)	30	32	34	36	38	40	42	44	46	48	50	52	54	56	56	68	70	72																								
5.640 (0.2220)	32	34	36	38	40	42	44	46	48	50	52	54	56	58	58	70	72																									
5.660 (0.2228)	34	36	38	40	42	44	46	48	50	52	54	56	58	60	60	72																										
5.680 (0.2236)	36	38	40	42	44	46	48	50	52	54	56	58	60	62	62																											
5.700 (0.2244)	38	40	42	44	46	48	50	52	54	56	58	60	62	64	64																											
5.720 (0.2252)	40	42	44	46	48	50	52	54	56	58	60	62	64	66	66																											
5.740 (0.2260)	42	44	46	48	50	52	54	56	58	60	62	64	66	68	68																											

Y

A126378E01

HINT:
New lifter thickness [mm (in.)]

Lifter No.	Thickness	Lifter No.	Thickness	Lifter No.	Thickness
06	5.060 (0.1992)	30	5.300 (0.2087)	54	5.540 (0.2181)
08	5.080 (0.2000)	32	5.320 (0.2094)	56	5.560 (0.2189)
10	5.100 (0.2008)	34	5.340 (0.2102)	58	5.580 (0.2197)
12	5.120 (0.2016)	36	5.360 (0.2110)	60	5.600 (0.2205)
14	5.140 (0.2024)	38	5.380 (0.2118)	62	5.620 (0.2213)
16	5.160 (0.2031)	40	5.400 (0.2126)	64	5.640 (0.2220)
18	5.180 (0.2039)	42	5.420 (0.2134)	66	5.660 (0.2228)
20	5.200 (0.2047)	44	5.440 (0.2142)	68	5.680 (0.2236)
22	5.220 (0.2055)	46	5.460 (0.2150)	70	5.700 (0.2244)
24	5.240 (0.2063)	48	5.480 (0.2157)	72	5.720 (0.2252)
26	5.260 (0.2071)	50	5.500 (0.2165)	74	5.740 (0.2260)
28	5.280 (0.2079)	52	5.520 (0.2173)		

(k) Install the No. 3 camshaft sub-assembly.
(l) Install the No. 3 chain tensioner assembly.
(m) Install the No. 4 camshaft sub-assembly.
(n) Install the camshaft.
(o) Install the No. 2 chain tensioner assembly.
(p) Install the No. 2 camshaft.
(q) Install the No. 1 chain tensioner assembly.
(1) Check that the timing marks of the camshaft timing gears are aligned with the timing marks of the bearing cap as shown in the illustration.

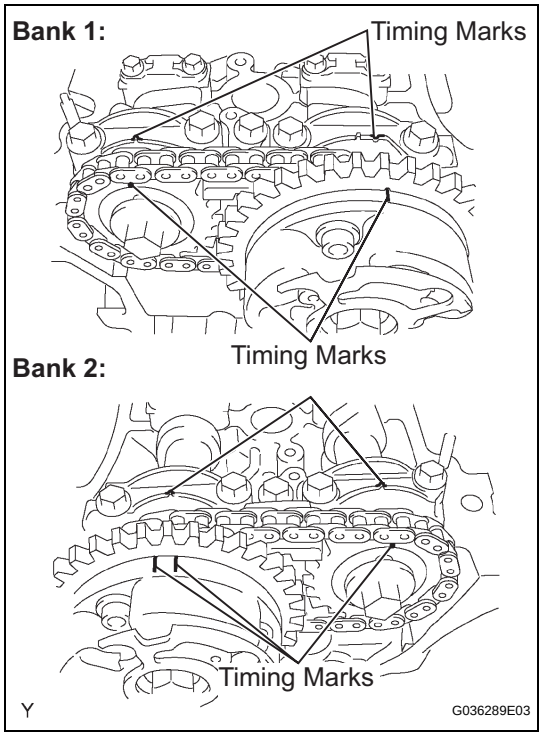

16. **INSTALL CYLINDER HEAD COVER SUB-ASSEMBLY LH (See page EM-57)**
17. **INSTALL CYLINDER HEAD COVER SUB-ASSEMBLY (See page EM-58)**
18. **INSTALL IGNITION COIL ASSEMBLY (See page IG-8)**
19. **INSTALL INTAKE AIR SURGE TANK (See page FU-17)**
20. **INSTALL NO. 2 SURGE TANK STAY (See page FU-19)**
21. **INSTALL NO. 1 SURGE TANK STAY (See page FU-19)**
22. **INSTALL OIL BAFFLE PLATE (See page FU-19)**
23. **INSTALL THROTTLE BODY BRACKET (See page FU-19)**
24. **INSTALL AIR CLEANER ASSEMBLY (See page ES-431)**
25. **ADD ENGINE COOLANT (See page CO-3)**
26. **CONNECT CABLE TO NEGATIVE BATTERY TERMINAL**
Torque: 3.9 N*m (40 kgf*cm, 35 in.*lbf)
27. **CHECK FOR ENGINE COOLANT LEAKAGE (See page CO-4)**

EM

28. **INSPECT IGNITION TIMING (See page EM-1)**
29. **INSTALL V-BANK COVER (See page ES-431)**

TIMING CHAIN

COMPONENTS

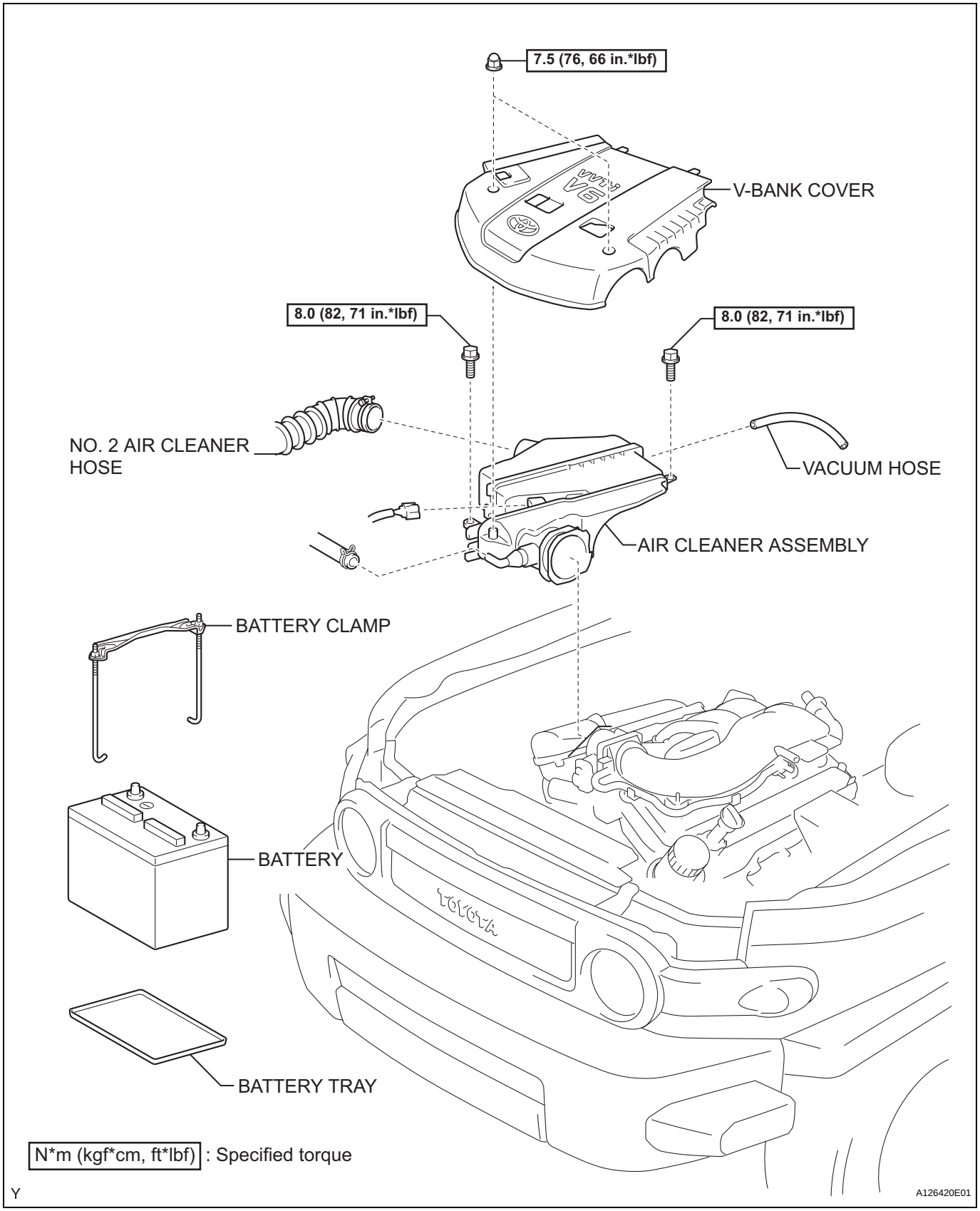

EM

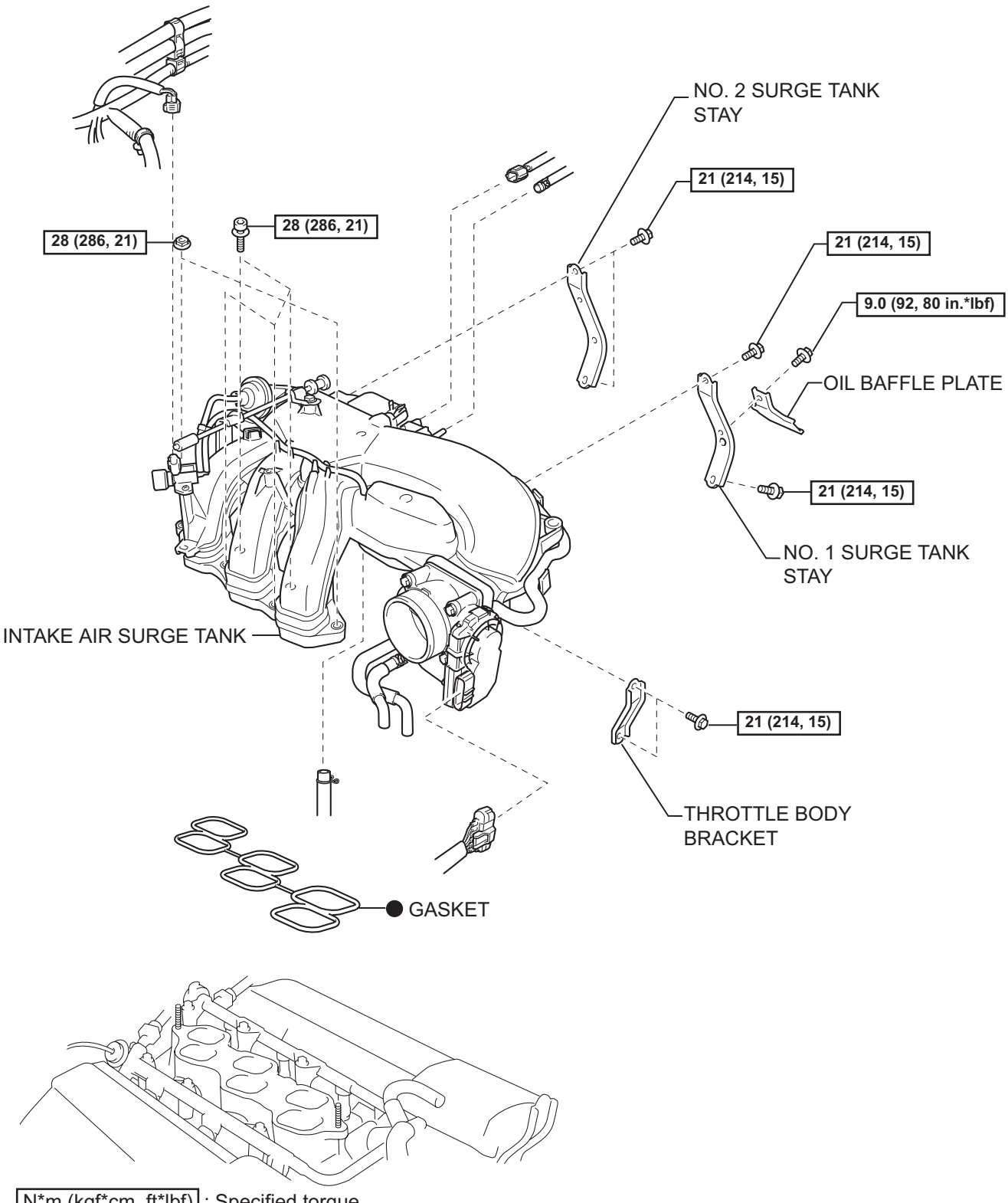

N*m (kgf*cm, ft*lbf) : Specified torque

● Non-reusable part

Y

A126476E01

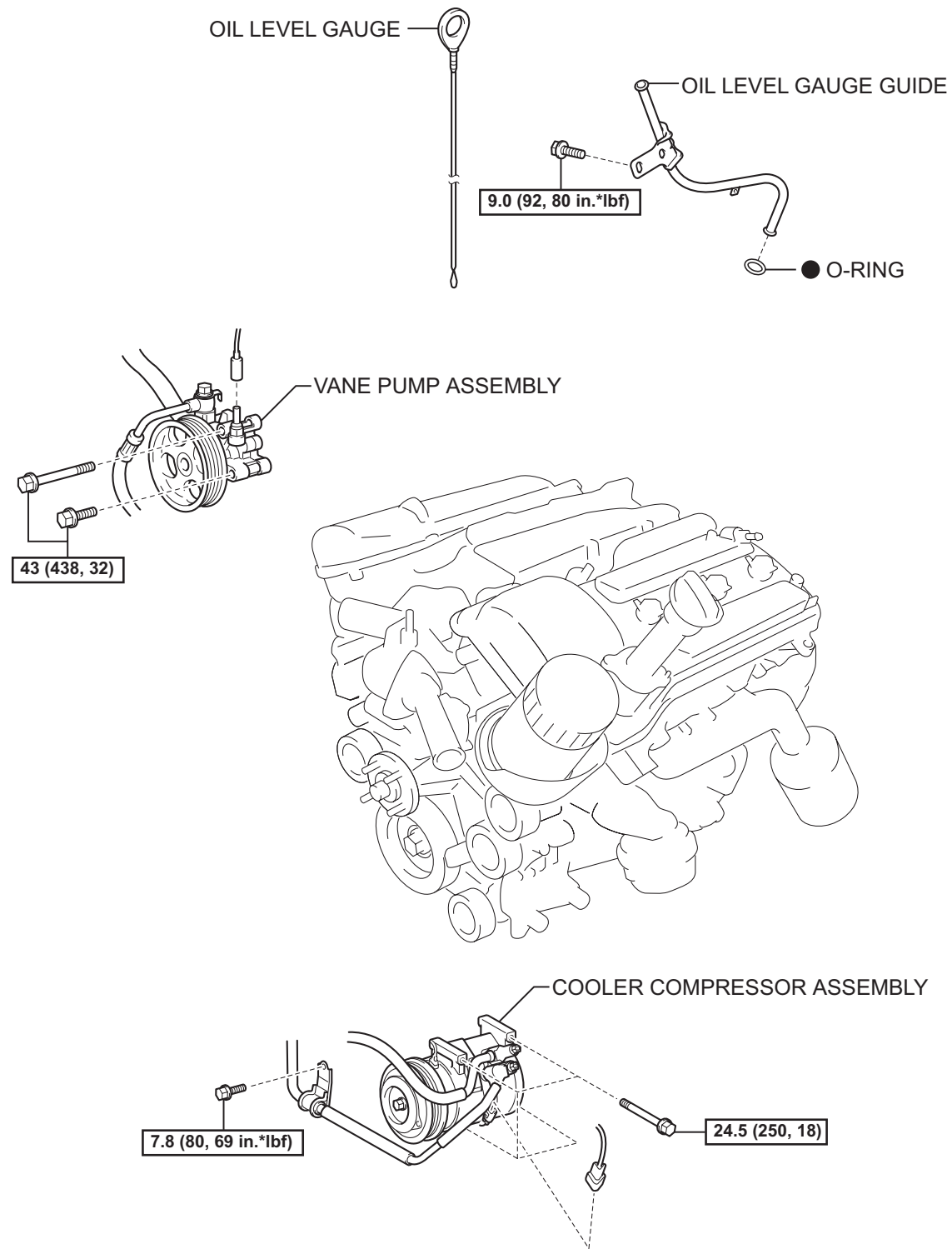

EM

N*m (kgf*cm, ft*lbf) : Specified torque

● Non-reusable part

Y

A126421E01

EM

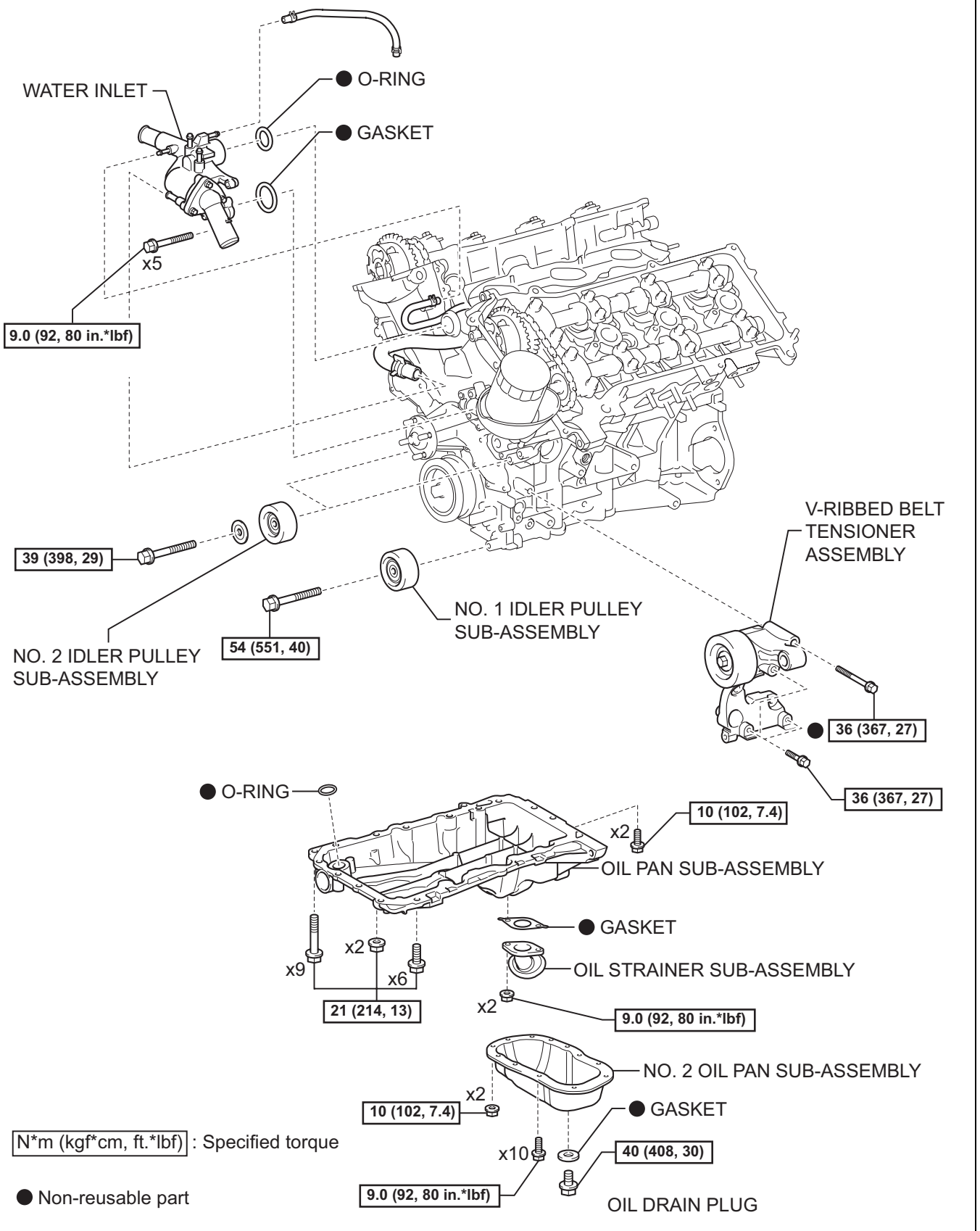
WATER INLET
O-RING
GASKET
x5
9.0 (92, 80 in.*lbf)
39 (398, 29)
NO. 2 IDLER PULLEY SUB-ASSEMBLY
54 (551, 40)
NO. 1 IDLER PULLEY SUB-ASSEMBLY
V-RIBBED BELT TENSIONER ASSEMBLY
36 (367, 27)
36 (367, 27)
O-RING
10 (102, 7.4)
x2
OIL PAN SUB-ASSEMBLY
GASKET
x9
x2
x6
21 (214, 13)
OIL STRAINER SUB-ASSEMBLY
x2
9.0 (92, 80 in.*lbf)
NO. 2 OIL PAN SUB-ASSEMBLY
x2
10 (102, 7.4)
GASKET
x10
40 (408, 30)
9.0 (92, 80 in.*lbf)
OIL DRAIN PLUG
N*m (kgf*cm, ft.*lbf) : Specified torque
Non-reusable part
Y
A126506E01

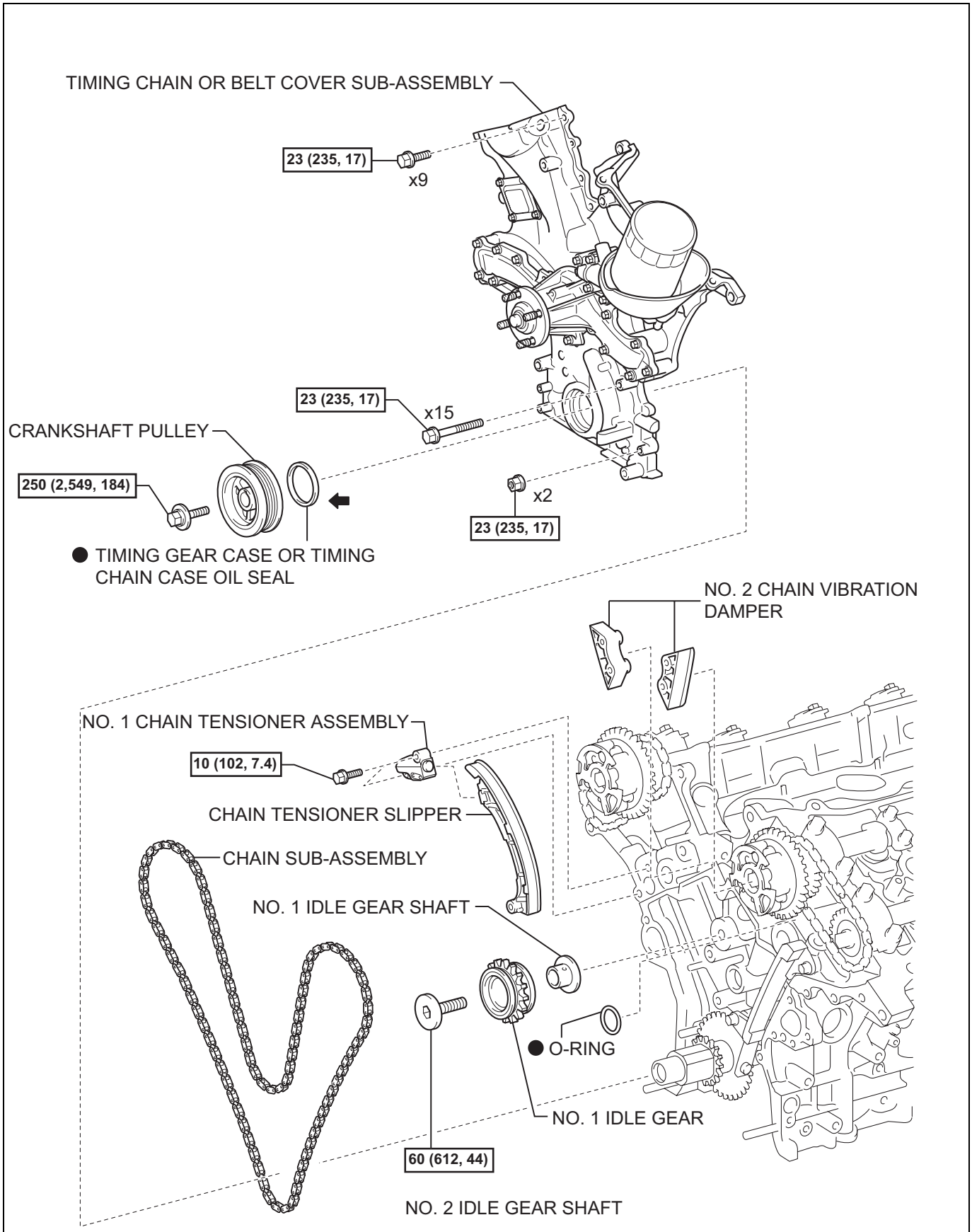

N*m (kgf*cm, ft*lbf) : Specified torque ● Non-reusable part ⬅ Apply MP grease

Y

A113591E02

REMOVAL

1. **REMOVE BATTERY**
2. **DRAIN ENGINE COOLANT (See page CO-3)**
3. **DRAIN ENGINE OIL (See page LU-4)**
4. **REMOVE POWER STEERING LINK ASSEMBLY (for 2WD)**
   Refer to the procedures up to "REMOVE POWER STEERING LINK ASSEMBLY" (See page PS-18).
5. **REMOVE POWER STEERING LINK ASSEMBLY (for 4WD)**
   Refer to the procedures up to "REMOVE POWER STEERING LINK ASSEMBLY" (See page PS-37).
6. **REMOVE FRONT DIFFERENTIAL CARRIER ASSEMBLY (for 4WD)**
   Refer to the procedures up to "REMOVE FRONT DIFFERENTIAL CARRIER ASSEMBLY" (See page DF-20).
7. **REMOVE FAN**
   Refer to the procedures up to "REMOVE FAN PULLEY" (See page CO-17).
8. **REMOVE GENERATOR ASSEMBLY**
   Refer to the procedures up to "REMOVE GENERATOR ASSEMBLY" (See page CH-9)
9. **SEPARATE COOLER COMPRESSOR ASSEMBLY (See page ES-420)**
10. **REMOVE V-RIBBED BELT TENSIONER ASSEMBLY**
    (a) Remove the 5 bolts, then remove the V-ribbed belt tensioner.

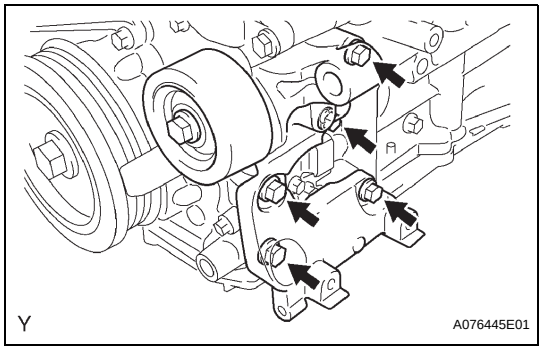

11. **REMOVE OIL LEVEL GAUGE GUIDE**
    (a) Remove the oil level gauge.
    (b) Remove the bolt and pull out the oil level gauge guide.
    (c) Remove the O-ring from the oil level gauge guide.

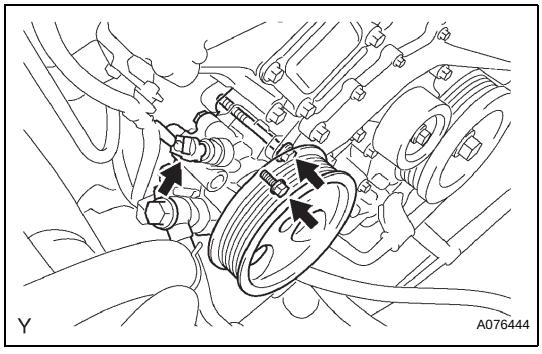

12. **SEPARATE VANE PUMP ASSEMBLY**
    (a) Disconnect the power steering pressure switch connector.
    (b) Remove the 2 bolts, then separate the vane pump.
    NOTICE:
    Do not hit the pulley with other parts when separating the vane pump.
    HINT:
    The vane pump is suspended securely.

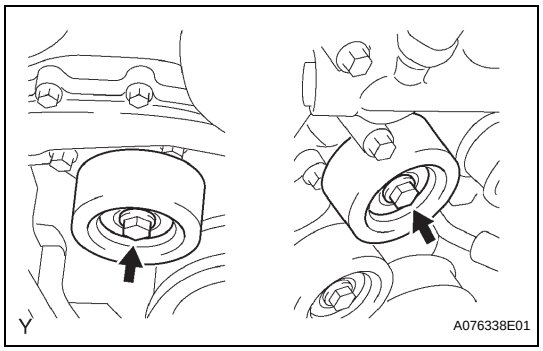

13. REMOVE NO. 2 IDLER PULLEY SUB-ASSEMBLY

(a) Remove the 2 bolts, then remove the No. 2 idler pulleys.

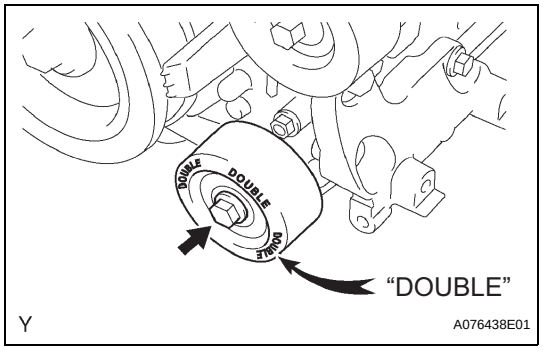

14. REMOVE NO. 1 IDLER PULLEY SUB-ASSEMBLY

(a) Remove the bolt, then remove the No. 1 idler pulley.

EM

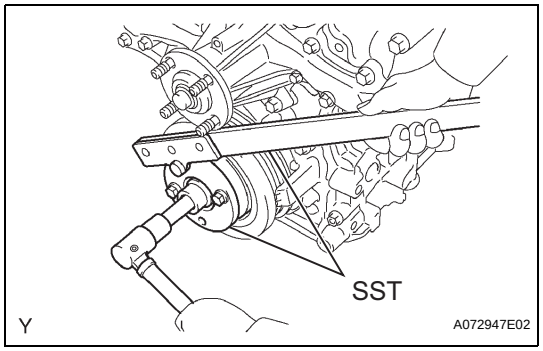

15. REMOVE CRANKSHAFT PULLEY

(a) Using SST, hold the crankshaft pulley and loosen the pulley set bolt.
SST 09213-54015 (91651-60855), 09330-00021

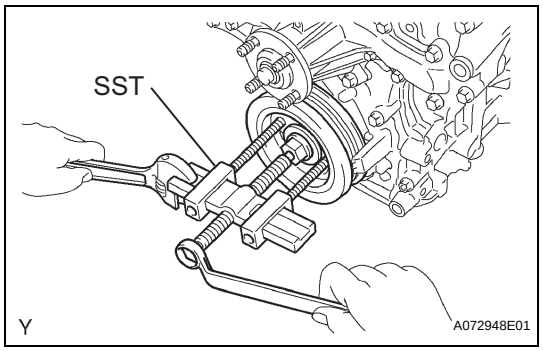

(b) Using the pulley set bolt and SST, remove the crankshaft pulley.
SST 09950-50013 (09951-05010, 09952-05010, 09953-05020, 09954-05030)

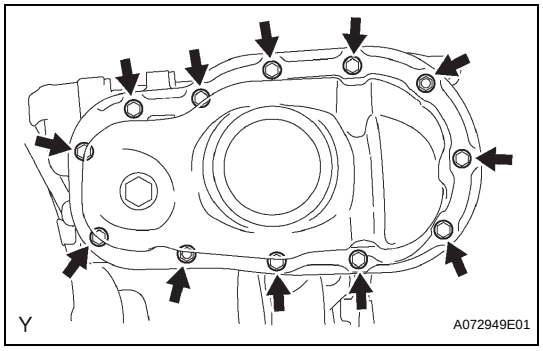

16. REMOVE NO. 2 OIL PAN SUB-ASSEMBLY

(a) Remove the 10 bolts and 2 nuts.

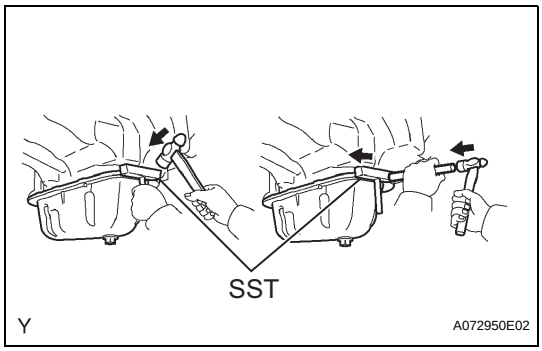

(b) Insert the blade of SST between the oil pan and No. 2 oil pan, cut off applied sealer and remove the No. 2 oil pan.
SST 09032-00100
NOTICE:
- **Be careful not to damage the contact surfaces of the oil pan and No. 2 oil pan.**
- **Be careful not to damage the No. 2 oil pan flange.**

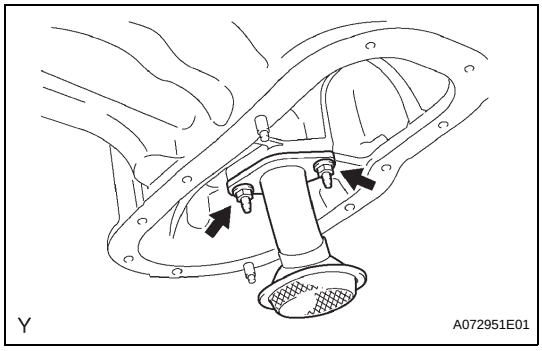

17. REMOVE OIL STRAINER SUB-ASSEMBLY

(a) Remove the 2 nuts, then remove the oil strainer and gasket.

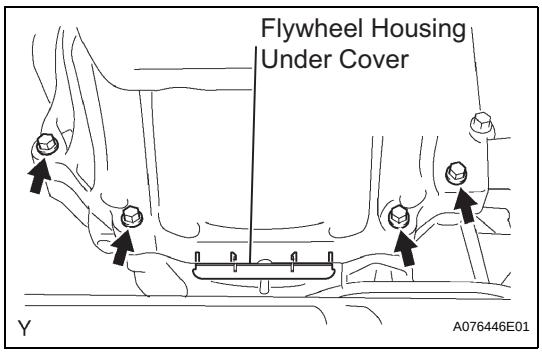

18. REMOVE OIL PAN SUB-ASSEMBLY

(a) Remove the 4 housing bolts.
(b) Remove the flywheel housing under cover.

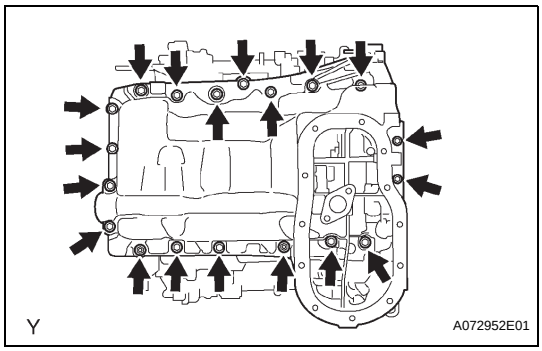

(c) Remove the 17 bolts and 2 nuts.

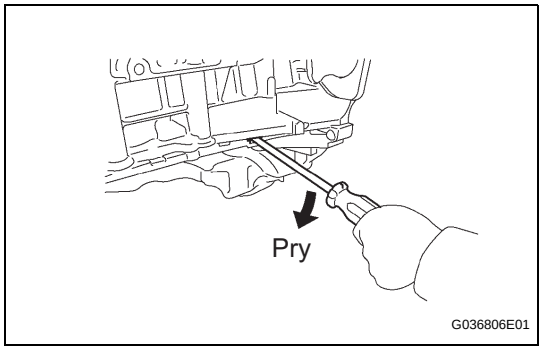

(d) Using a screwdriver, remove the oil pan by prying between the oil pan and cylinder block.
NOTICE:
Be careful not to damage the contact surfaces of the cylinder block and oil pan.
(e) Remove the O-ring from the oil pump.

19. REMOVE AIR CLEANER ASSEMBLY (See page ES-429)

20. REMOVE THROTTLE BODY BRACKET (See page FU-11)

21. **REMOVE OIL BAFFLE PLATE (See page FU-11)**
22. **REMOVE NO. 1 SURGE TANK STAY (See page FU-11)**
23. **REMOVE NO. 2 SURGE TANK STAY (See page FU-12)**
24. **REMOVE INTAKE AIR SURGE TANK (See page FU-12)**
25. **REMOVE IGNITION COIL ASSEMBLY (See page IG-8)**
26. **REMOVE CAMSHAFT TIMING OIL CONTROL VALVE ASSEMBLY (See page ES-414)**
27. **REMOVE VVT SENSOR (See page ES-417)**
28. **REMOVE WATER INLET (See page CO-8)**
29. **REMOVE CYLINDER HEAD COVER SUB-ASSEMBLY (See page EM-40)**
30. **REMOVE CYLINDER HEAD COVER SUB-ASSEMBLY LH (See page EM-40)**
31. **REMOVE TIMING CHAIN OR BELT COVER SUB-ASSEMBLY**
    (a) Remove the 24 bolts and 2 nuts.

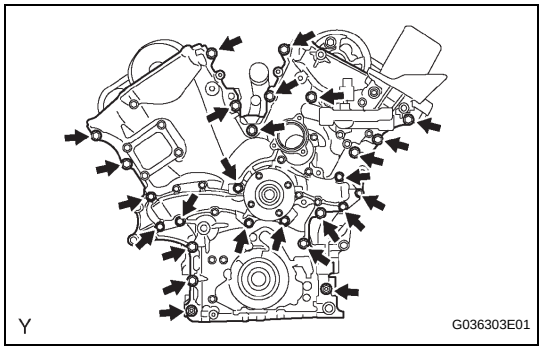

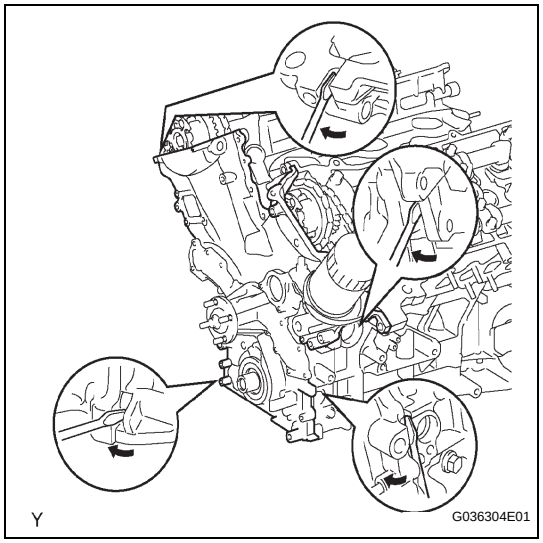

    (b) Remove the timing chain cover by prying between the timing chain cover, cylinder head or cylinder block with a screwdriver.
    NOTICE:
    Be careful not to damage the contact surfaces of the timing chain cover, cylinder block and cylinder head.
    (c) Remove the O-ring from the LH cylinder head.
32. **REMOVE TIMING GEAR CASE OR TIMING CHAIN CASE OIL SEAL (See page EM-163)**

EM

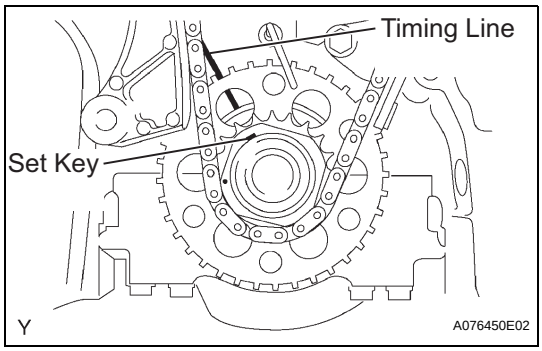

33. SET NO. 1 COMPRESSION TO TDC/COMPRESSION

(a) Using the crankshaft pulley set bolt, turn the crankshaft to align the crankshaft set key with the timing line of the cylinder block.

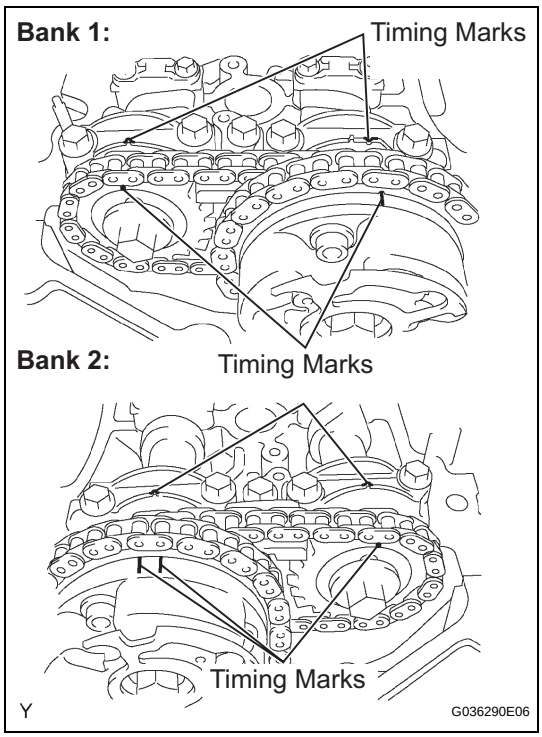

(b) Check that the timing marks of the camshaft timing gears are aligned with the timing marks of the bearing caps as shown in the illustration.
If not, turn the crankshaft 1 complete revolution (360°) and align the timing marks as above.

34. REMOVE NO. 1 CHAIN TENSIONER ASSEMBLY

NOTICE:

- **Never rotate the crankshaft with the chain tensioner removed.**
- **When rotating the camshaft with the timing chain removed, rotate the crankshaft counterclockwise 40° from the TDC first.**

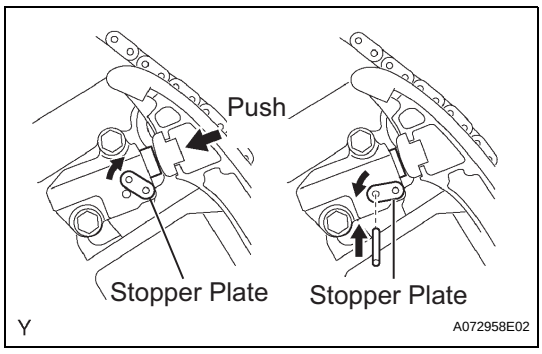

(a) While turning the stopper plate of the tensioner upward, push in the plunger of the chain tensioner as shown in the illustration.

(b) While turning the stopper plate of the tensioner downward, insert a bar of ϕ 3.5 mm (0.138) into the holes in the stopper plate and tensioner to fix the stopper plate.

(c) Remove the 2 bolts, then remove the chain tensioner.

35. REMOVE CHAIN TENSIONER SLIPPER

36. REMOVE IDLE SPROCKET ASSEMBLY

(a) Using a 10 mm hexagon wrench, remove the No. 2 idle gear shaft, No. 1 idle gear and No. 1 idle gear shaft.

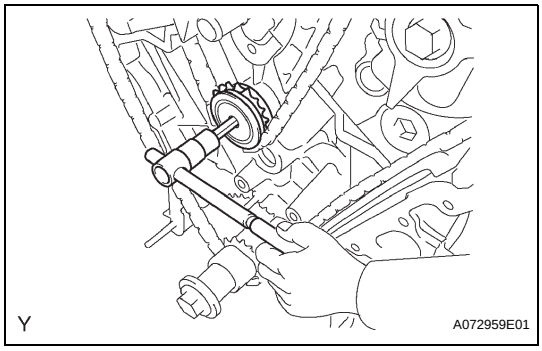

37. REMOVE NO. 2 CHAIN VIBRATION DAMPER

(a) Remove the 2 No. 2 chain vibration dampers.

38. REMOVE CHAIN SUB-ASSEMBLY

INSTALLATION

1. INSTALL CHAIN TENSIONER SLIPPER

2. INSTALL NO. 1 CHAIN TENSIONER ASSEMBLY

(a) While turning the stopper plate of the tensioner clockwise, push in the plunger of the tensioner as shown in the illustration.

(b) While turning the stopper plate of the tensioner counterclockwise, insert a bar of ϕ 35 mm (0.138 in.) into the holes in the stopper plate and tensioner to fix the stopper plate.

(c) Install the chain tensioner with the 2 bolts.
Torque: 10 N*m (102 kgf*cm, 7.4 ft.*lbf)

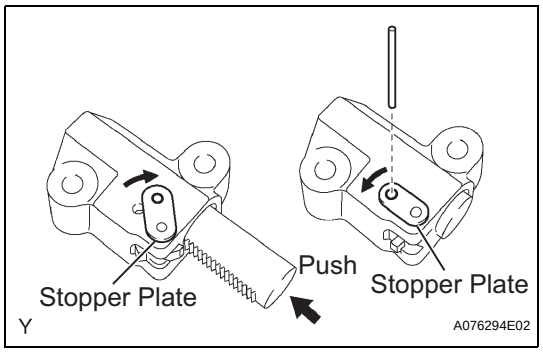

3. INSTALL CHAIN SUB-ASSEMBLY

(a) Set the No. 1 cylinder to TDC/ compression.

(1) Align the timing marks of the camshaft timing gears and bearing caps.

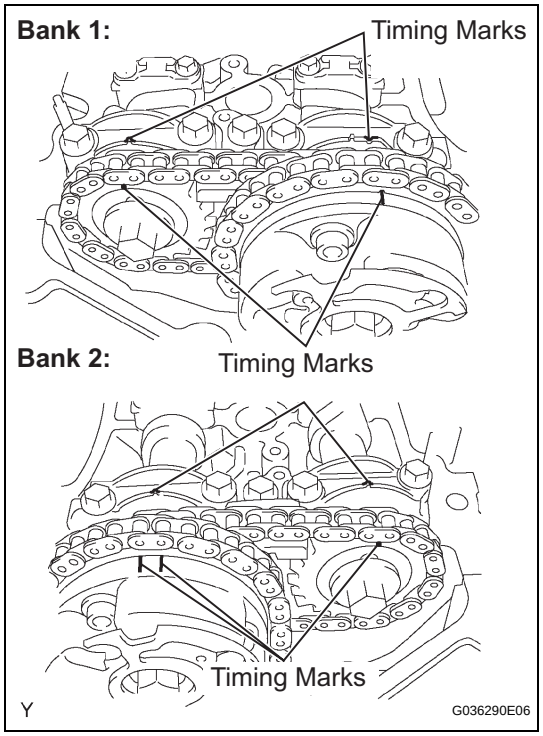

(2) Using the crankshaft pulley set bolt, turn the crankshaft to align the crankshaft set key with the timing line of the cylinder block.

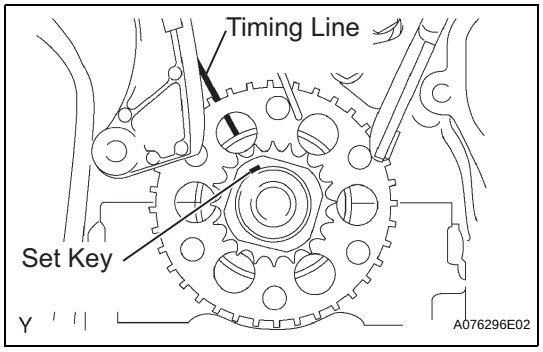

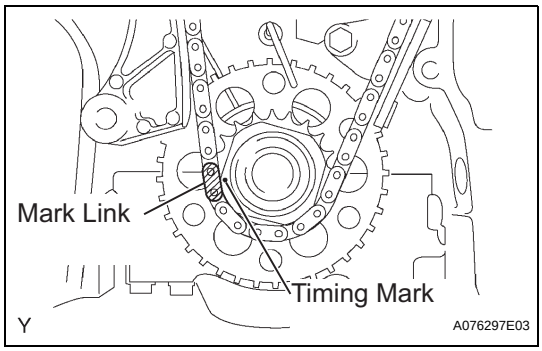

(b) Align the yellow mark link with the timing mark of the crankshaft timing link.

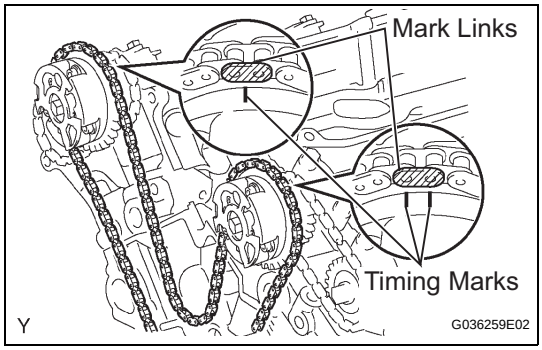

(c) Align the orange mark links with the timing marks of the camshaft timing gears, and install the chain.

4. INSTALL NO. 2 CHAIN VIBRATION DAMPER

(a) Install the 2 No. 2 chain vibration dampers.

5. INSTALL IDLE SPROCKET ASSEMBLY

(a) Apply a light coat of engine oil to rotating surface of the No. 1 idle gear shaft.

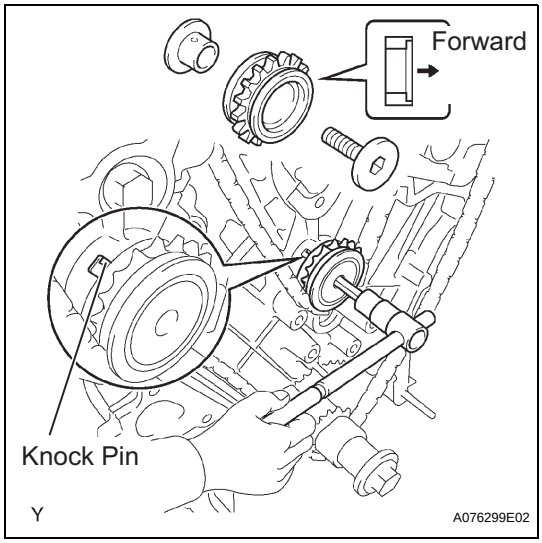

(b) Temporarily install the No. 1 idle gear shaft together with the No. 2 idle gear shaft with the knock pin of the No. 1 idle gear shaft and the knock pin groove of the cylinder block are aligned.
NOTICE:
Orient the idle gear shafts correctly.

(c) Using a 10 mm hexagon wrench, tighten the No. 2 idle gear shaft.
Torque: 60 N*m (612 kgf*cm, 44 ft.*lbf)

(d) Remove the bar from the chain tensioner.

6. INSTALL TIMING GEAR CASE OR TIMING CHAIN CASE OIL SEAL (See page EM-163)

7. INSTALL TIMING CHAIN OR BELT COVER SUB-ASSEMBLY

(a) Remove any old packing (FIPG) material.
HINT:
Do not drop any oil on the contact surfaces of the timing chain cover, cylinder head and cylinder block.

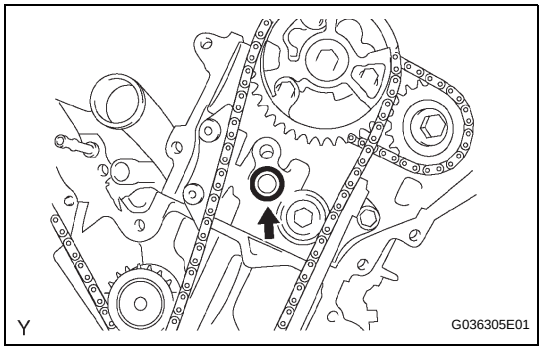

(b) Install a new O-ring onto the bank 2 cylinder head as shown in the illustration.

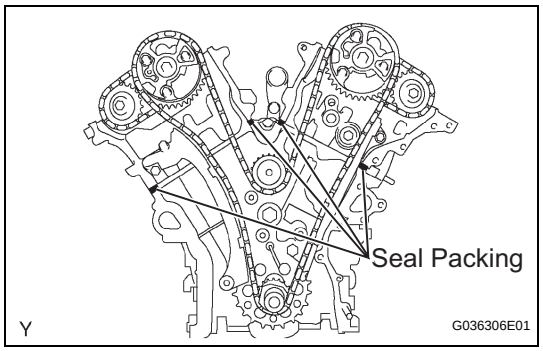

(c) Apply continuous beads of seal packing (diameter 3 to 4 mm (0.12 to 0.16 in.)) to the 4 locations shown in the illustration.
Seal packing:
Toyota Genuine Seal Packing Black, Three Bond 1207B or the equivalent

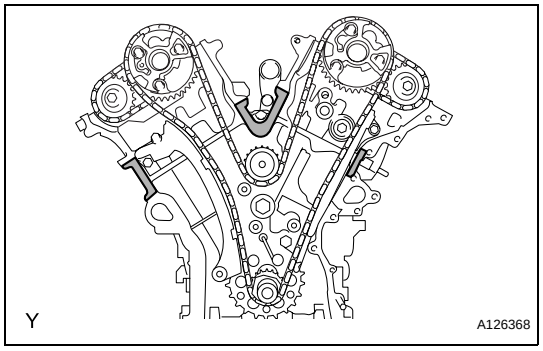

(d) Keep the seal surface between the cylinder block and the cylinder head shown in the illustration free of oil before installing the chain cover.

EM

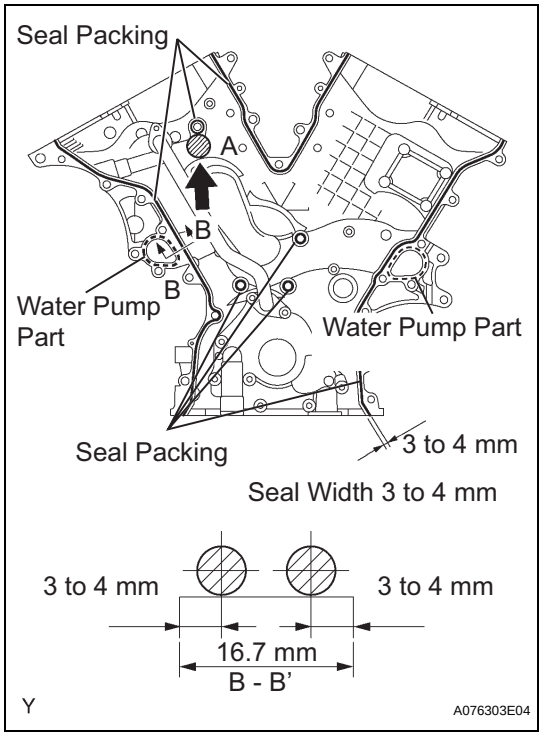

(e) Apply continuous beads of seal packing (diameter 3 to 4 mm (0.12 to 0.16 in.)) to the timing chain cover as shown in the illustration.
Seal packing:
Water pump part:
Toyota Genuine Seal Packing 1282B, Three Bond 1282B or the equivalent
Other parts:
Toyota Genuine Seal Packing Black, Three Bond 1207B or the equivalent
NOTICE:
- **Install the timing chain cover within 3 minutes of applying the seal packing. The timing chain cover bolts and nuts must be tightened within 15 minutes of the installation. Otherwise the seal packing must be removed and reapplied.**
- **Do not apply seal packing to portion A shown in the illustration.**

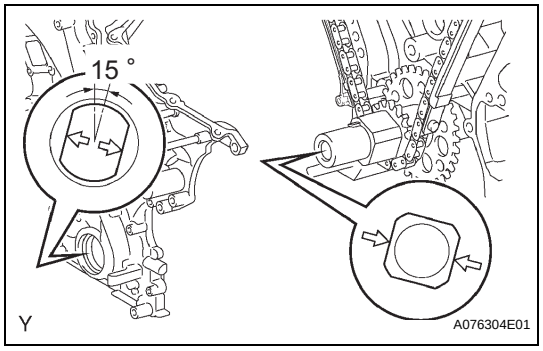

(f) Align the key way of the oil pump drive rotor with the rectangular portion of the crankshaft timing gear, and slide the timing chain cover into place.

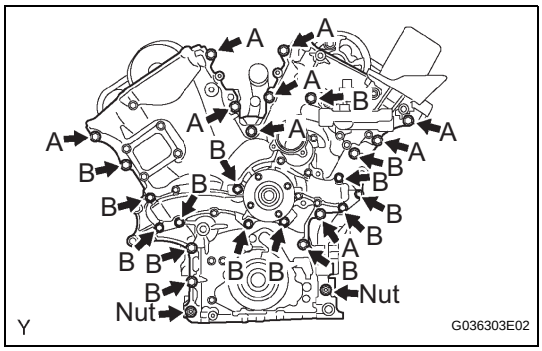

(g) Install the timing chain cover with the 24 bolts and 2 nuts. Tighten the bolts and nuts uniformly in several steps.
Torque: 23 N*m (235 kgf*cm, 17 ft.*lbf)
NOTICE:
Pay attention not to wrap the chain and slipper over the timing chain cover seal line.
Each bolt length is as follows

Bolt	Length
A	25 mm (0.98 in.)
B	55 mm (2.17 in.)

8. **INSTALL CYLINDER HEAD COVER SUB-ASSEMBLY LH (See page EM-57)**
9. **INSTALL CYLINDER HEAD COVER SUB-ASSEMBLY (See page EM-58)**
10. **INSTALL WATER INLET (See page CO-9)**
11. **INSTALL VVT SENSOR (See page ES-417)**
12. **INSTALL CAMSHAFT TIMING OIL CONTROL VALVE ASSEMBLY (See page ES-415)**
13. **INSTALL IGNITION COIL ASSEMBLY (See page IG-8)**
14. **INSTALL INTAKE AIR SURGE TANK (See page FU-17)**
15. **INSTALL NO. 2 SURGE TANK STAY (See page FU-19)**
16. **INSTALL NO. 1 SURGE TANK STAY (See page FU-19)**
17. **INSTALL OIL BAFFLE PLATE (See page FU-19)**
18. **INSTALL THROTTLE BODY BRACKET (See page FU-19)**
19. **INSTALL AIR CLEANER ASSEMBLY (See page ES-431)**
20. **INSTALL OIL PAN SUB-ASSEMBLY**
    (a) Remove any old packing (FIPG) material.
    HINT:
    Do not drop any oil on the contact surfaces of the cylinder block, rear oil seal and oil pan.
    (b) Install a new O-ring onto the oil pump.

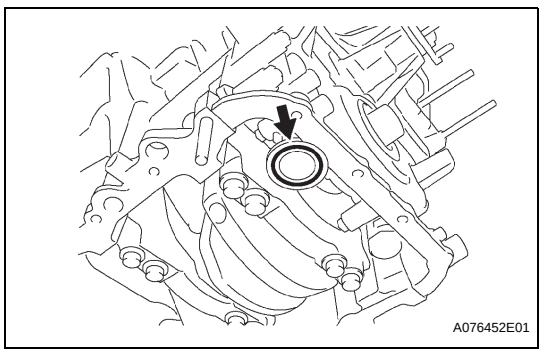

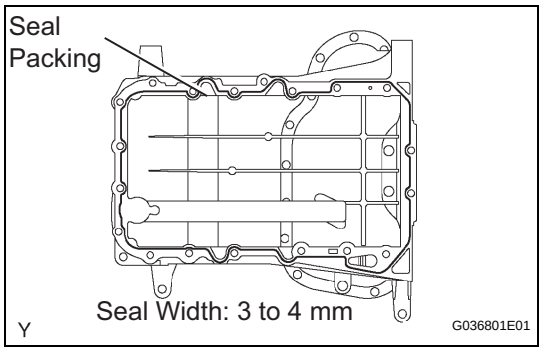

(c) Apply a continuous bead of seal packing (diameter 3 to 4 mm (0.12 to 0.16 in.)) to the oil pan as shown in the illustration.
Seal packing:
Toyota Genuine Seal Packing Black, Three Bond 1207B or the equivalent
NOTICE:
Install the oil pan within 3 minutes of applying the seal packing. Tighten the oil pan bolts and nuts within 15 minutes of installing the oil pan. Otherwise, the seal packing must be removed and reapplied.

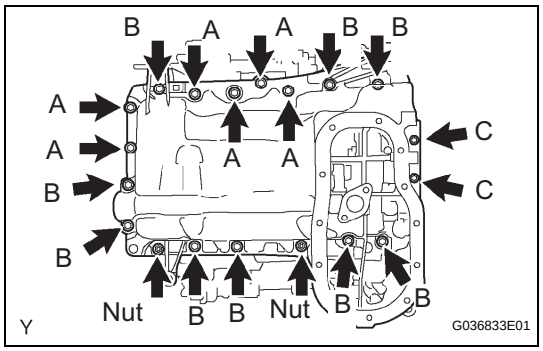

(d) Install the oil pan with the 17 bolts and 2 nuts, and tighten the bolts and nuts uniformly in several steps.
Torque: 10 mm (0.39 in.) head
10 N*m (102 kgf*cm, 7.4 ft.*lbf)
12 mm (0.47 in.) head
21 N*m (214 kgf*cm, 16 ft.*lbf)
Nut
21 N*m (1,214 kgf*cm, 16 ft.*lbf)
HINT:
Each bolt length is as follows:

Bolt	Length
A	25 mm (0.98 in.)
B	45 mm (1.77 in.)
C	14 mm (0.55 in.)

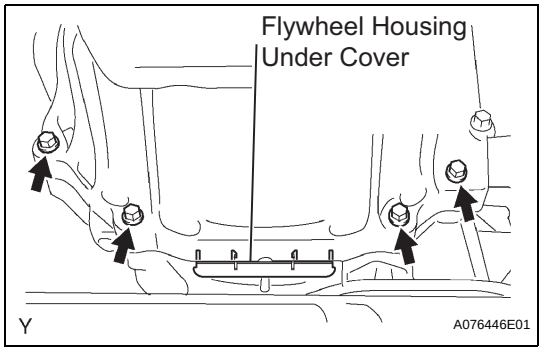

(e) Install the 4 housing bolts.
Torque: 37 N*m (377 kgf*cm, 27 ft.*lbf)
(f) Install the flywheel housing under cover.

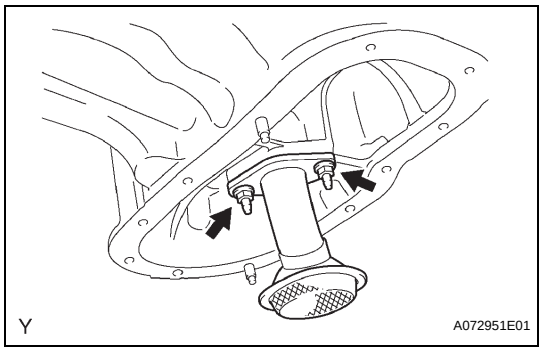

21. INSTALL OIL STRAINER SUB-ASSEMBLY
(a) Install a new gasket and the oil strainer with the 2 nuts.
Torque: 9.0 N*m (92 kgf*cm, 80 in.*lbf)

22. INSTALL NO. 2 OIL PAN SUB-ASSEMBLY
(a) Remove any old packing (FIPG) material.
HINT:
Do not drop any oil on the contact surfaces of the oil pan and No. 2 oil pan.

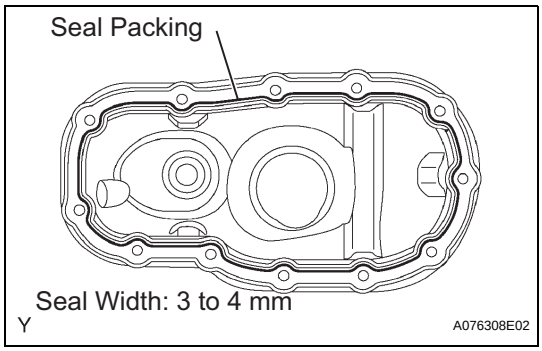

(b) Apply a continuous bead of seal packing (diameter 3 to 4 mm (0.12 to 0.16 in.)) as shown in the illustration.
Seal packing:
Toyota Genuine Seal Packing Black, Three Bond 1207B or the equivalent
NOTICE:
Install the No. 2 oil pan within 3 minutes of applying the seal packing. Tighten the No. 2 oil pan bolts and nuts within 15 minutes of installing the No. 2 oil pan. Otherwise, the seal packing must be removed and reapplied.

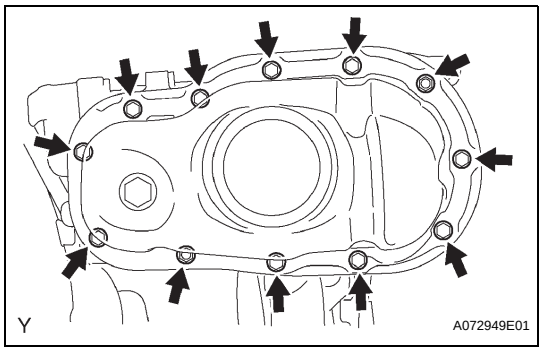

(c) Install the No. 2 oil pan with the 10 bolts and 2 nuts. Tighten the bolts and nuts uniformly in several steps.
Torque: Bolt
9.0 N*m (92 kgf*cm, 80 in.*lbf)
Nut
10 N*m (102 kgf*cm, 7.4 in.*lbf)

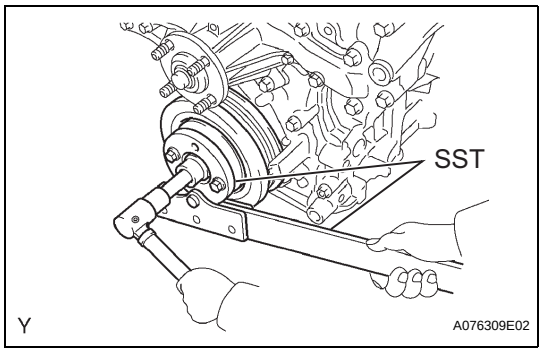

23. INSTALL CRANKSHAFT PULLEY
(a) Using SST, install the pulley set bolt.
SST 09213-54015 (91651-60855), 09330-00021
Torque: 250 N*m (2,549 kgf*cm, 184 ft.*lbf)

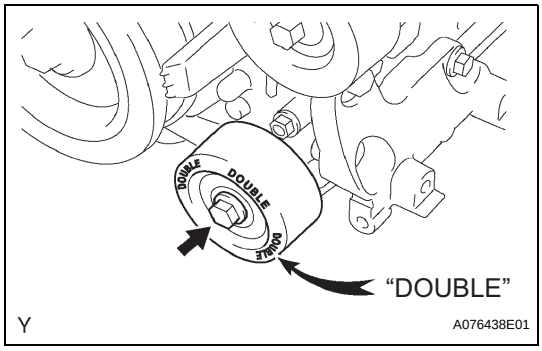

24. INSTALL NO. 1 IDLER PULLEY SUB-ASSEMBLY
(a) Install the idler pulley with the bolt.
Torque: 39 N*m (398 kgf*cm, 29 ft.*lbf)
HINT:
DOUBLE is marked on the No. 1 idler pulley to distinguish it from the No. 2 idler pulley.

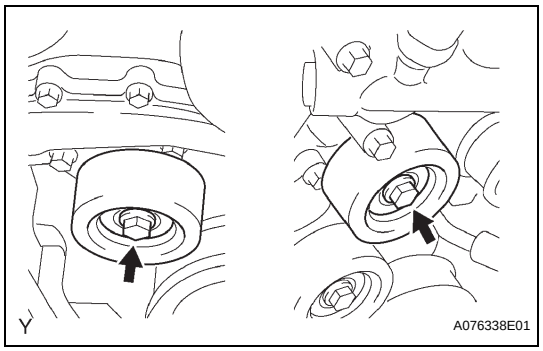

25. INSTALL NO. 2 IDLER PULLEY SUB-ASSEMBLY

(a) Install the 2 No. 2 idler pulleys with the 2 bolts.
Torque: 54 N*m (551 kgf*cm, 40 ft.*lbf)

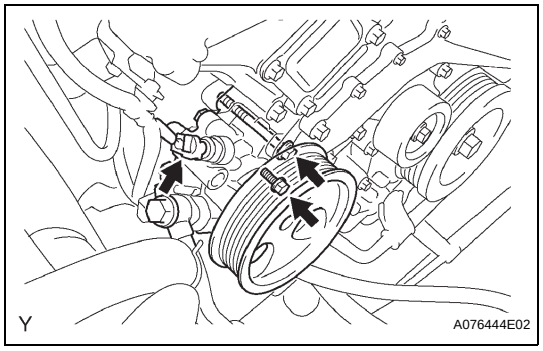

26. INSTALL VANE PUMP ASSEMBLY

(a) Install the vane pump with the 2 bolts.
Torque: 43 N*m (438 kgf*cm, 32 ft.*lbf)
NOTICE:
Do not hit the pulley with other parts when installing the vane pump.

(b) Connect the power steering pressure switch connector.

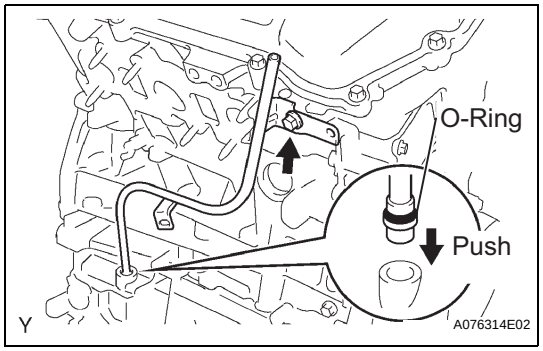

27. INSTALL OIL LEVEL GAUGE GUIDE

(a) Install a new O-ring onto the oil level gauge guide.
(b) Apply a light coat of engine oil to the O-ring.
(c) Push the oil level gauge guide end into the guide hole in the oil pan.
(d) Install the oil level gauge guide with the bolt.
Torque: 9.0 N*m (92 kgf*cm, 80 in.*lbf)
(e) Install the oil level gauge guide.

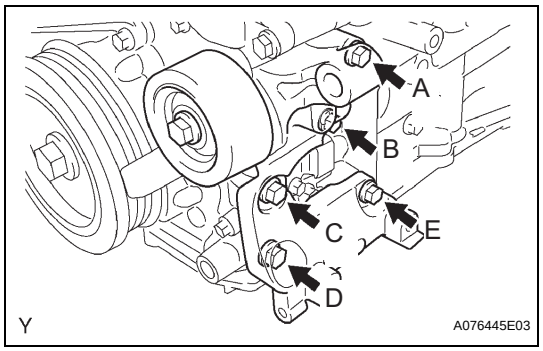

28. INSTALL V-RIBBED BELT TENSIONER ASSEMBLY
NOTICE:
The bolt in position A is not reusable.
HINT:
Each bolt length is as follows:

Position	Length
A	70 mm (2.76 in.)
B, C, D and E	33 mm (1.30 in.)

(a) Use a new bolt in position A.
(b) Finger-tighten the bolts in positions A and E and install the bracket.
(c) Tighten the bolts in positions A and E.
Torque: 36 N*m (267 kgf*cm, 27 ft.*lbf)
(d) Tighten the bolts in positions B, C and D.
Torque: 36 N*m (267 kgf*cm, 27 ft.*lbf)

29. INSTALL COOLER COMPRESSOR ASSEMBLY (See page ES-421)

30. INSTALL GENERATOR ASSEMBLY
Refer to the procedures up to "INSTALL GENERATOR ASSEMBLY" (See page CH-17)

EM

31. **INSTALL FAN**
Refer to the procedures up to "INSTALL FAN PULLEY" (See page CO-17).

32. **INSTALL FRONT DIFFERENTIAL CARRIER ASSEMBLY (for 4WD)**
Refer to the procedures up to "INSTALL FRONT DIFFERENTIAL CARRIER ASSEMBLY" (See page DF-42).

33. **INSTALL POWER STEERING LINK ASSEMBLY (for 2WD)**
Refer to the procedures up to "INSTALL POWER STEERING LINK ASSEMBLY" (See page PS-30).

34. **INSTALL POWER STEERING LINK ASSEMBLY (for 4WD)**
Refer to the procedures up to "INSTALL POWER STEERING LINK ASSEMBLY" (See page PS-49).

35. **INSTALL BATTERY**

36. **ADD ENGINE COOLANT (See page CO-3)**

37. **ADD ENGINE OIL (See page LU-5)**

38. **ADD POWER STEERING FLUID**

39. **BLEED POWER STEERING FLUID (See page PS-2)**

40. **ADD DIFFERENTIAL OIL (for 4WD)**

41. **INSPECT DIFFERENTIAL OIL (for 4WD) (See page DF-3)**

42. **CHECK FOR ENGINE COOLANT LEAKAGE (See page CO-4)**

43. **CHECK FOR ENGINE OIL LEAKAGE**

44. **CHECK FOR POWER STEERING FLUID LEAKAGE**

45. **CHECK FOR DIFFERENTIAL OIL LEAKAGE**

46. **INSPECT AND ADJUST FRONT WHEEL ALIGNMENT** (See page SP-2)

CAMSHAFT

COMPONENTS

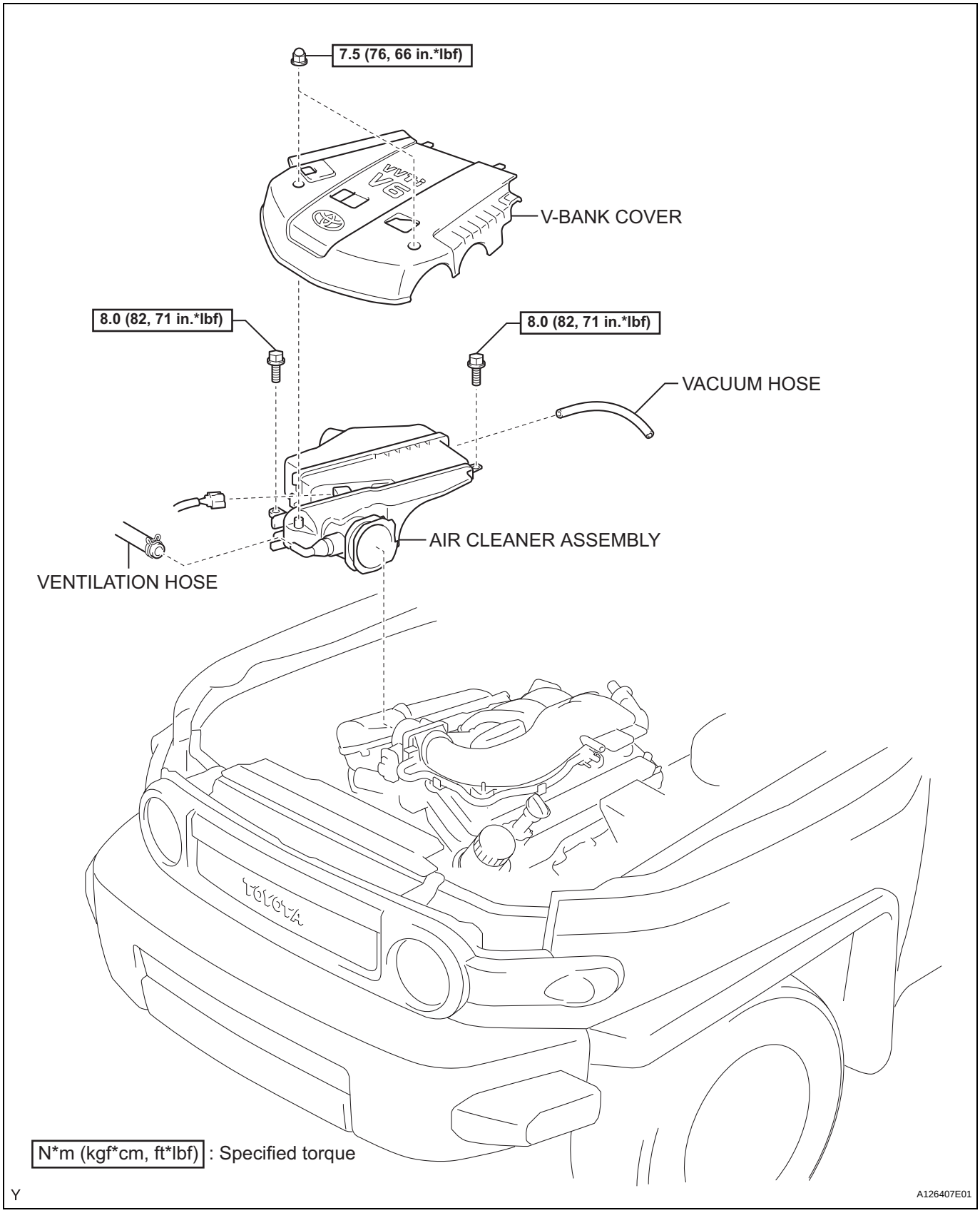

EM

EM

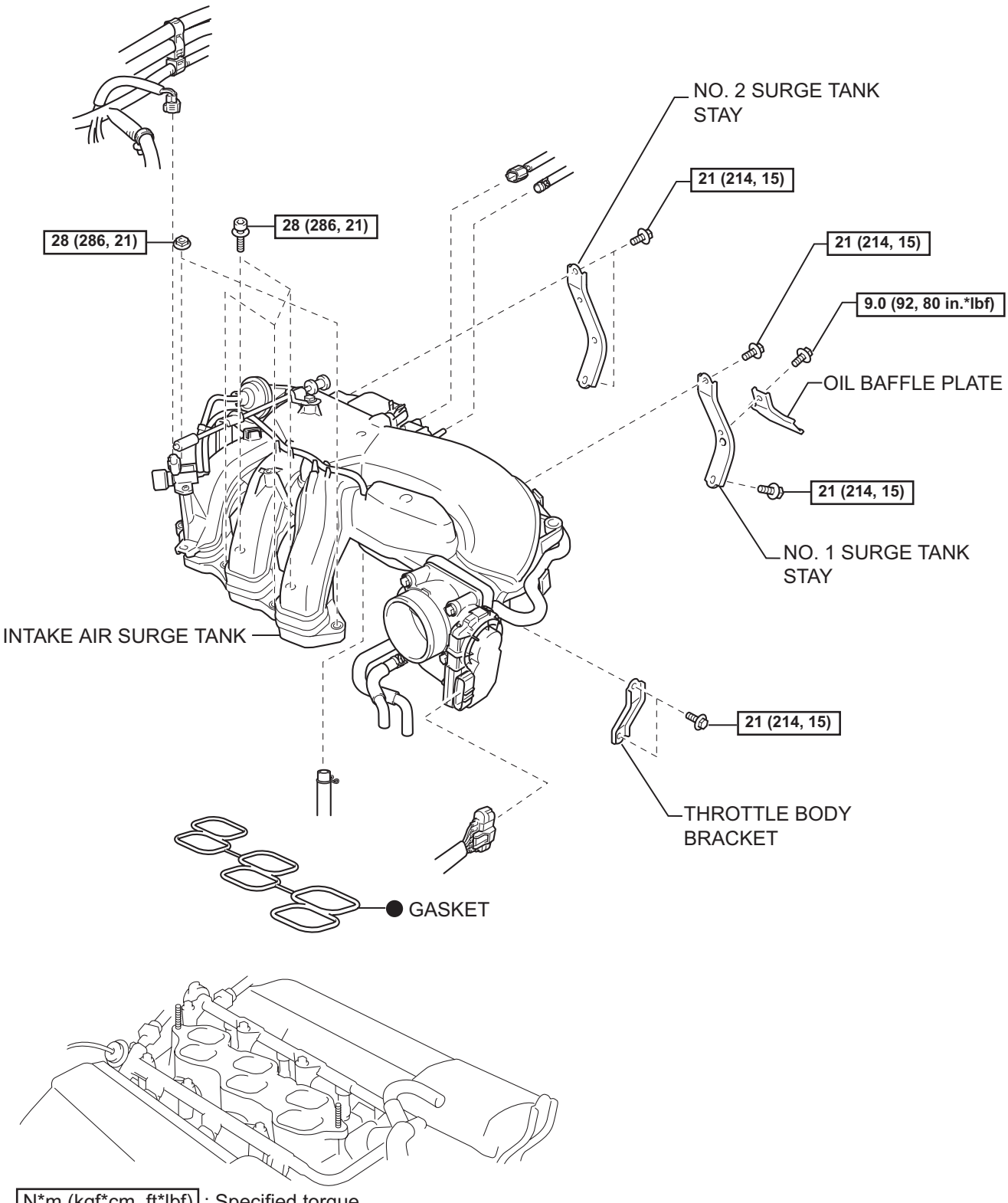

N*m (kgf*cm, ft*lbf) : Specified torque

● Non-reusable part

Y

A126476E01

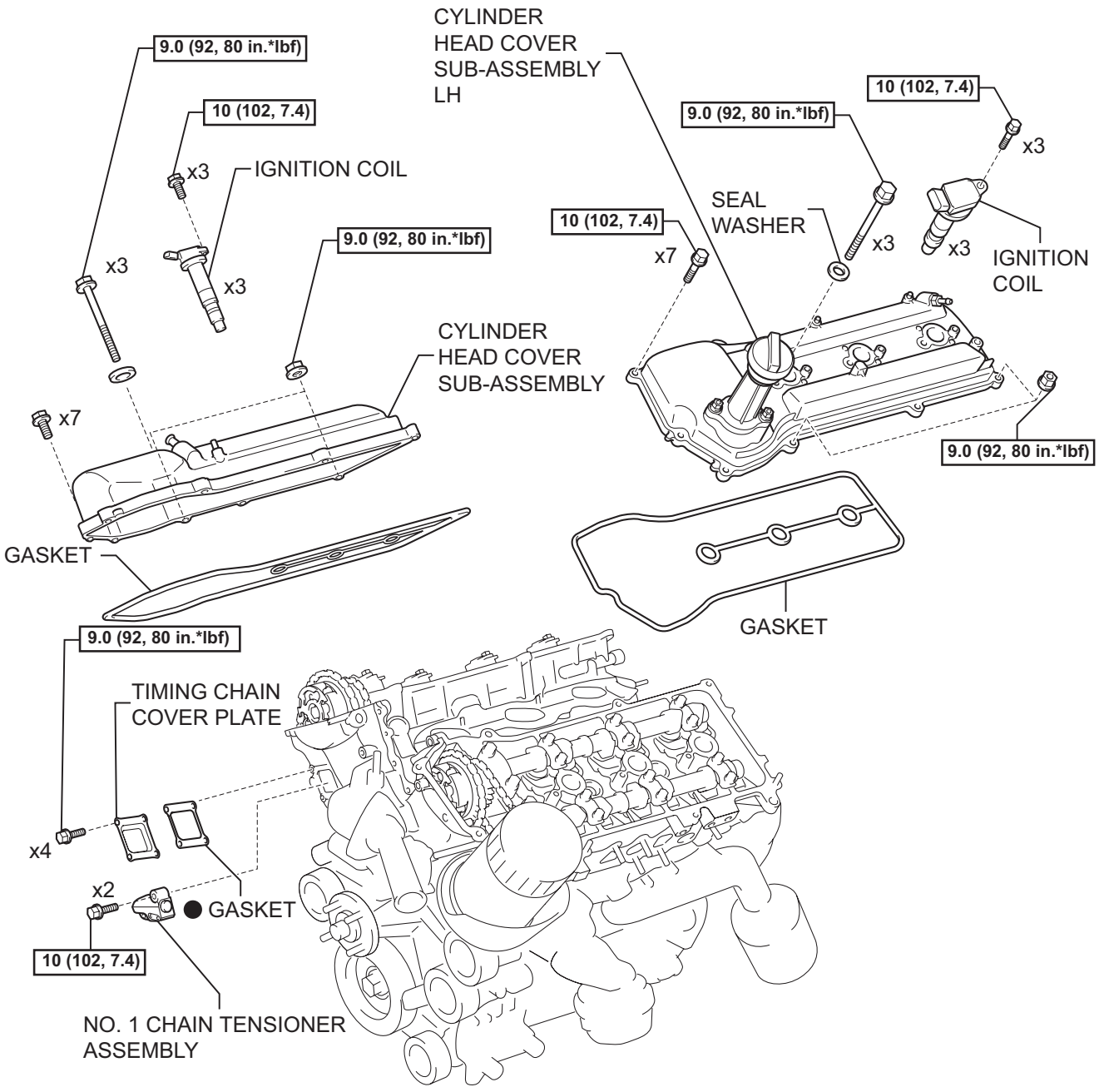

N*m (kgf*cm, ft*lbf) : Specified torque

● Non-reusable part

Y

A126426E01

EM

For Bank 1:

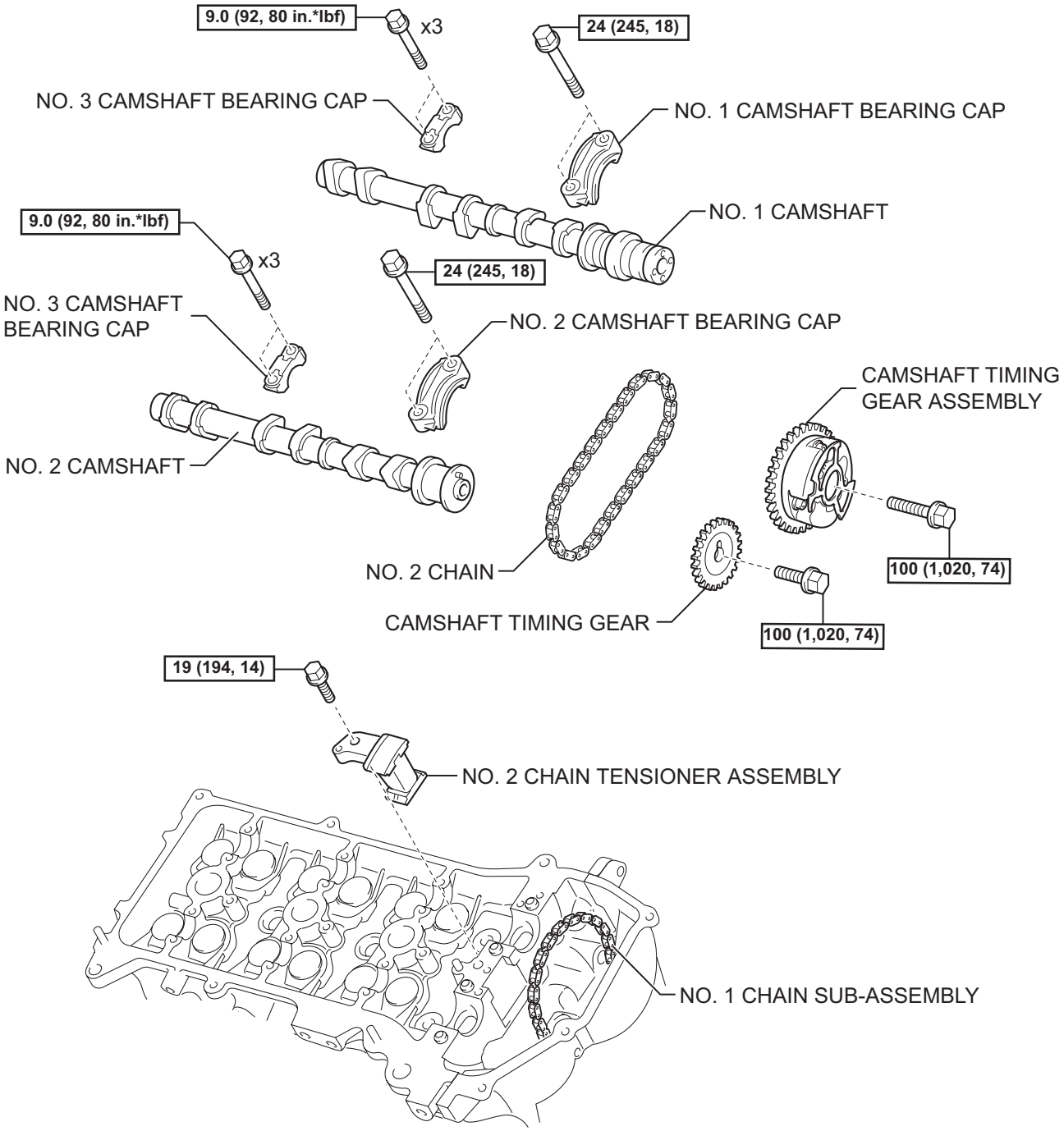

N*m (kgf*cm, ft*lbf) : Specified torque

Y

A126427E01

For Bank 2:

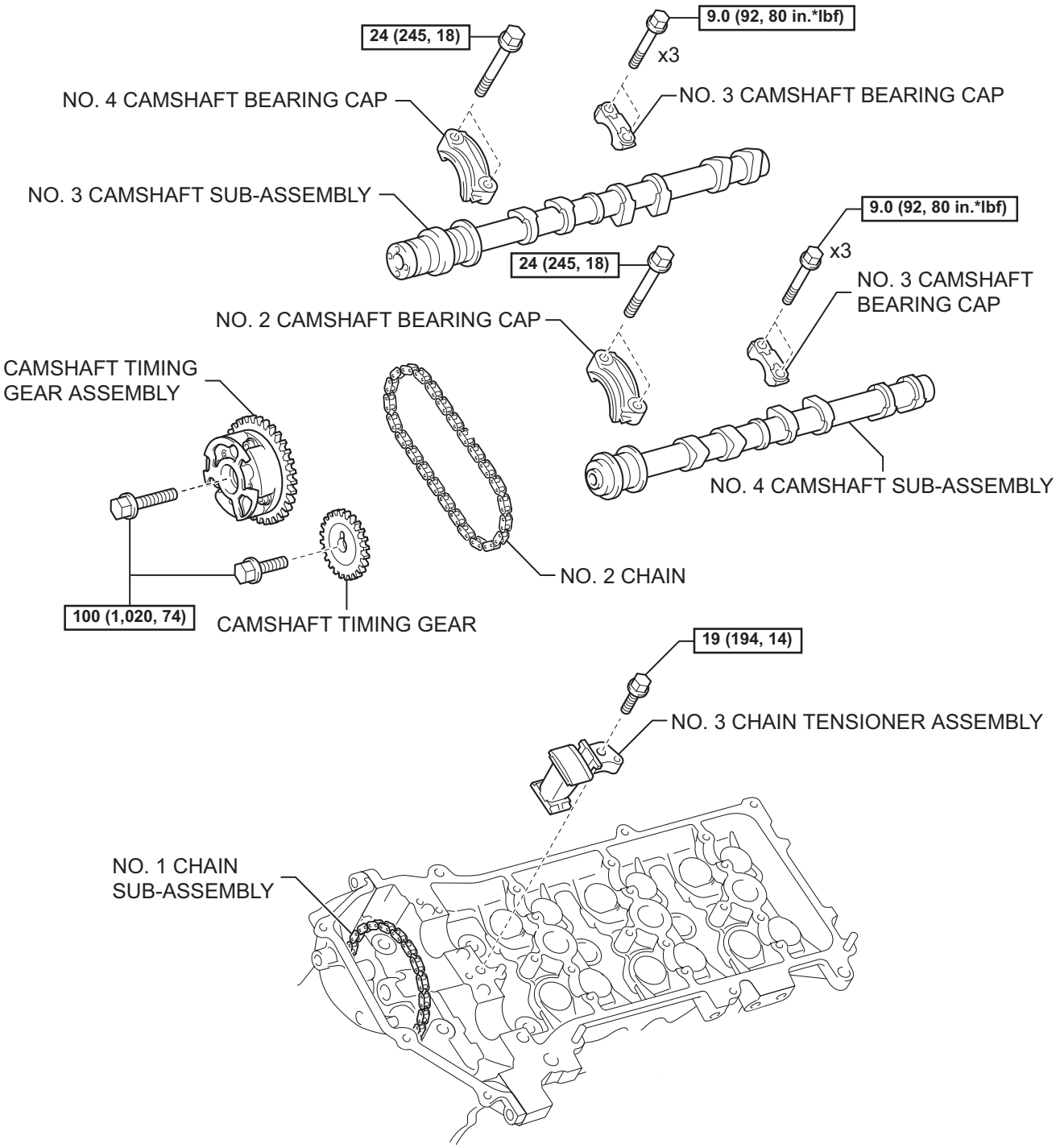

N*m (kgf*cm, ft*lbf) : Specified torque

Y

A126428E01

EM

REMOVAL

1. **DISCONNECT CABLE FROM NEGATIVE BATTERY TERMINAL**
2. **DRAIN ENGINE COOLANT (See page CO-3)**
3. **REMOVE V-BANK COVER (See page ES-428)**
4. **REMOVE AIR CLEANER ASSEMBLY (See page ES-429)**
5. **REMOVE THROTTLE BODY BRACKET (See page FU-11)**
6. **REMOVE OIL BAFFLE PLATE (See page FU-11)**
7. **REMOVE NO. 1 SURGE TANK STAY (See page FU-11)**
8. **REMOVE NO. 2 SURGE TANK STAY (See page FU-12)**
9. **REMOVE INTAKE AIR SURGE TANK (See page FU-12)**
10. **REMOVE IGNITION COIL ASSEMBLY (See page IG-8)**
11. **REMOVE CYLINDER HEAD COVER SUB-ASSEMBLY**
    (a) Remove the 10 bolts, 3 seal washers, 2 nuts, cylinder head cover and gasket.

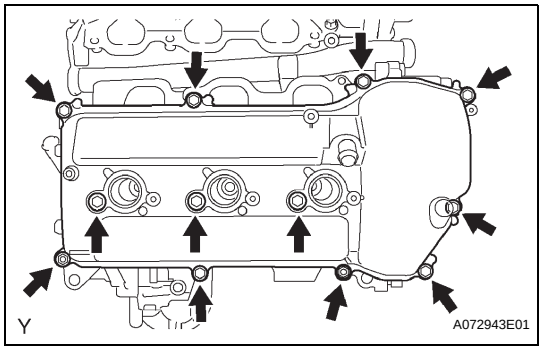

12. **REMOVE CYLINDER HEAD COVER SUB-ASSEMBLY LH**
    (a) Remove the 10 bolts, 3 seal washers, 2 nuts, cylinder head cover and gasket.

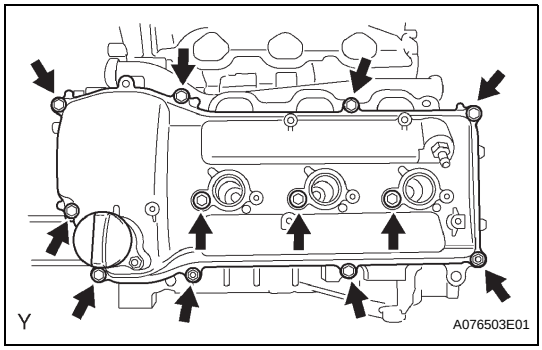

13. **SET NO. 1 CYLINDER TO TDC/COMPRESSION**
    (a) Turn the crankshaft pulley until its groove and the "0" timing mark of the timing chain cover are aligned.

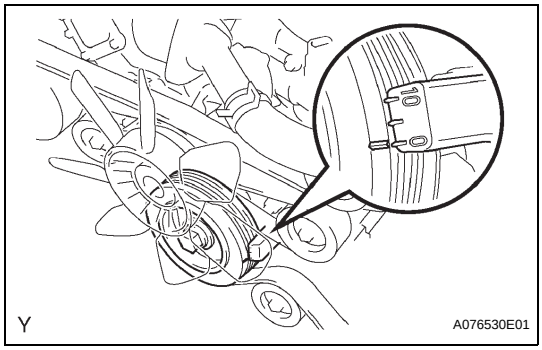

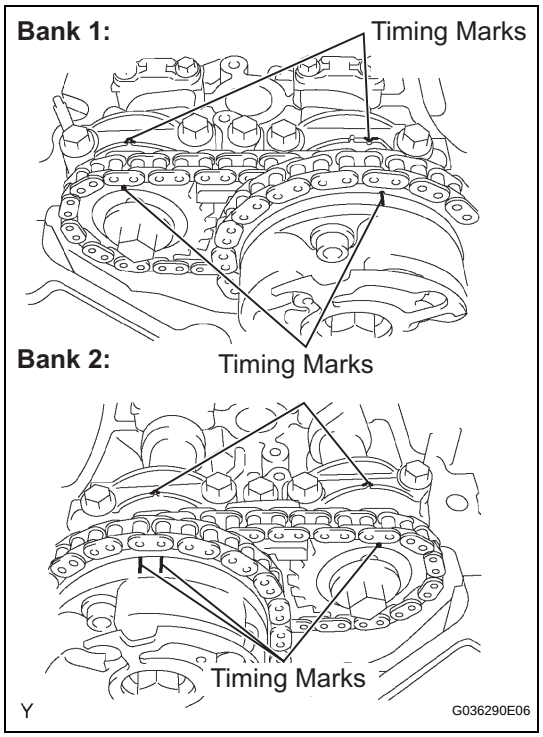

(b) Check that the timing marks of the camshaft timing gears are aligned with the timing marks of the bearing caps as shown in the illustration.
If not, turn the crankshaft 1 complete revolution (360°) and align the timing marks above.

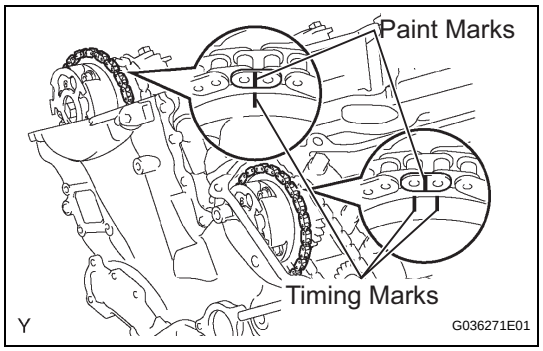

(c) Place paint marks on the No. 1 chain links corresponding to the timing marks of the camshaft timing gears.

14. REMOVE NO. 1 CHAIN TENSIONER ASSEMBLY

NOTICE:

- **Never rotate the crankshaft with the chain tensioner removed.**
- **When rotating the camshaft with the timing chain removed, rotate the crankshaft counterclockwise 40° from the TDC first.**

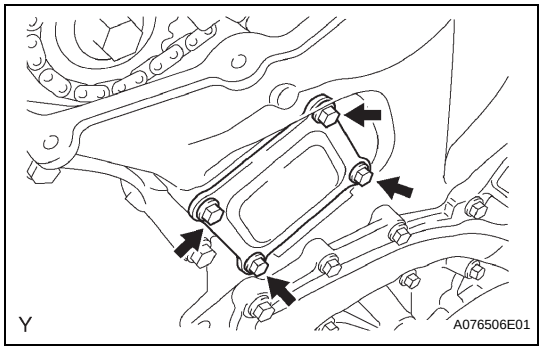

(a) Remove the 4 bolts, then remove the timing chain cover plate and gasket.

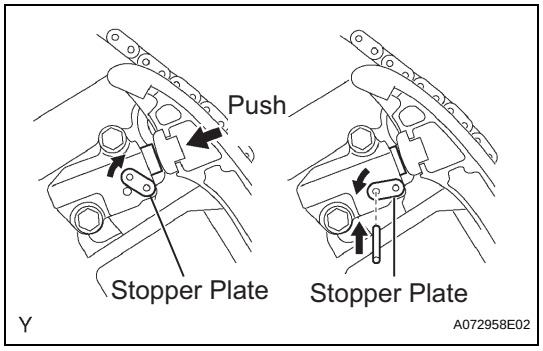

(b) While turning the stopper plate of the tensioner upward, push in the plunger of the chain tensioner as shown in the illustration.

(c) While turning the stopper plate of the tensioner downward, insert a bar of ϕ3.5 mm (0.138 in.) into the holes in the stopper plate and tensioner to fix the stopper plate.

(d) Remove the 2 bolts, then remove the chain tensioner.

15. REMOVE NO. 2 CAMSHAFT

NOTICE:

Keep the camshaft level while it is being removed. The camshaft thrust clearance is very small and failing to keep it level could crack or damage the cylinder head journal surface, which receives the thrust force. This could subsequently lead the camshaft to seize or break. Perform the following steps to avoid such problems.

(a) While raising the chain tensioner No. 2, insert a pin of ϕ1.0 mm (0.039 in.) into the hole to fix it.

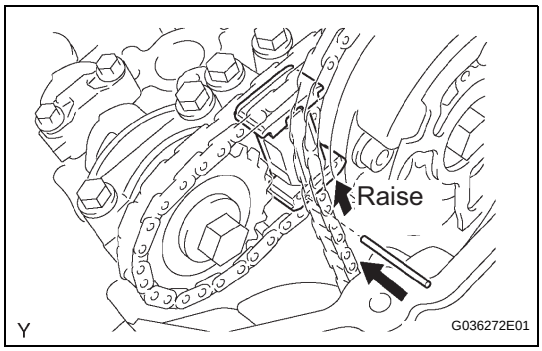

(b) Hold the hexagonal portion of the No. 2 camshaft with a wrench, and remove the camshaft timing gear set bolt.

NOTICE:

Be careful not to damage the cylinder head or valve lifter with the wrench.

(c) Separate the camshaft timing gear from the No. 2 camshaft.

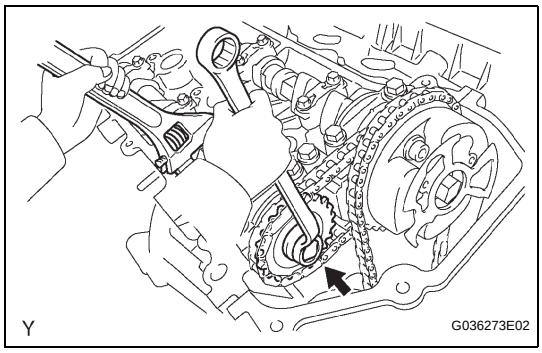

(d) Rotate the camshaft counterclockwise using the wrench so that the cam lobes of No. 1 cylinder face upward as shown in the illustration.

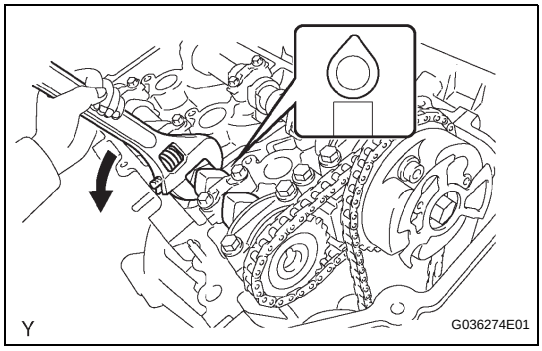

(e) Using several steps, uniformly loosen and remove the 8 bearing cap bolts in the sequence shown in the illustration.

(f) Remove the 4 bearing caps and No. 2 camshaft.

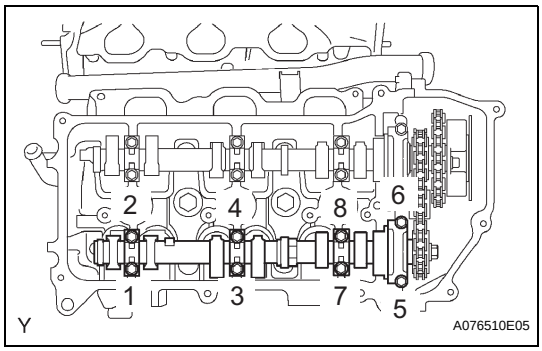

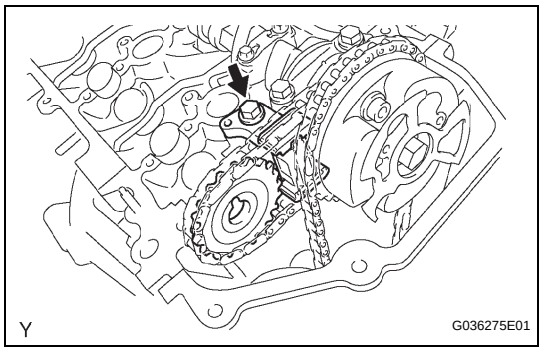

16. REMOVE NO. 2 CHAIN TENSIONER ASSEMBLY

(a) Remove the No. 2 chain tensioner bolt, then remove the No. 2 chain tensioner and camshaft timing gear.

17. REMOVE CAMSHAFT

NOTICE:

Keep the camshaft level while it is being removed. The camshaft thrust clearance is very small and failing to keep it level could crack or damage the cylinder head journal surface, which receives the thrust force. This could subsequently lead the camshaft to seize or break. Perform the following steps to avoid such problems.

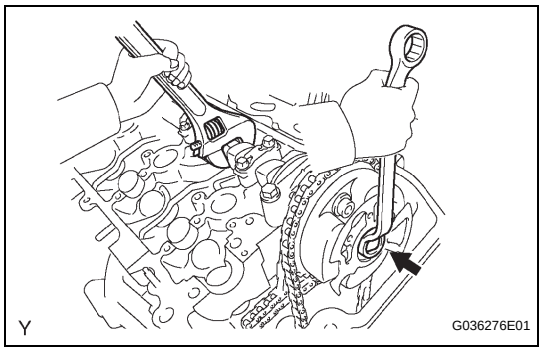

(a) Hold the hexagonal portion of the No. 1 camshaft with a wrench, and loosen the camshaft timing gear set bolt.

NOTICE:

- **Be careful not to damage the cylinder head or valve lifter with the wrench.**
- **Do not disassemble the camshaft timing gear assembly.**

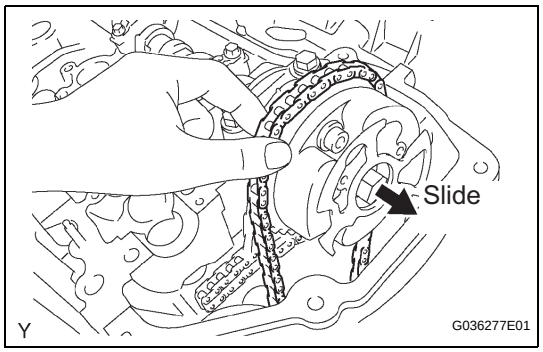

(b) Slide the camshaft timing gear and separate the No. 1 chain from the camshaft timing gear.

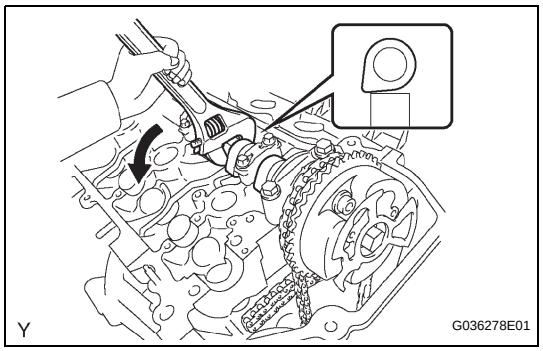

(c) Rotate the No. 1 camshaft counterclockwise using the wrench so that the cam lobes of No. 1 cylinder face downward as shown in the illustration.

EM

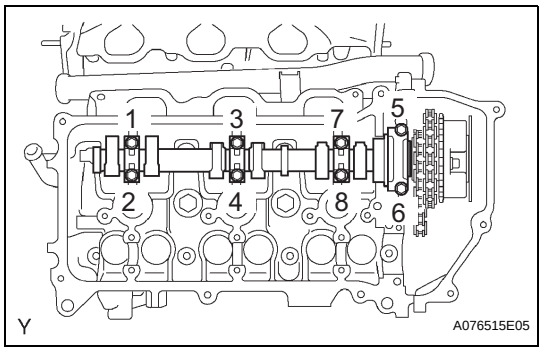

(d) Using several steps, loosen and remove the 8 bearing cap bolts in the sequence shown in the illustration.
(e) Remove the 4 bearing caps.

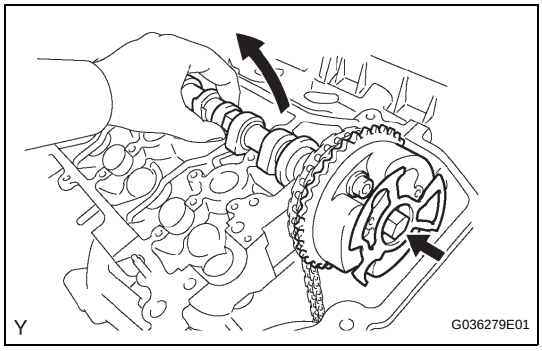

(f) Remove the camshaft timing gear set bolt with the No. 1 camshaft lifted up, then remove the No. 1 camshaft and camshaft timing gear with No. 2 chain.

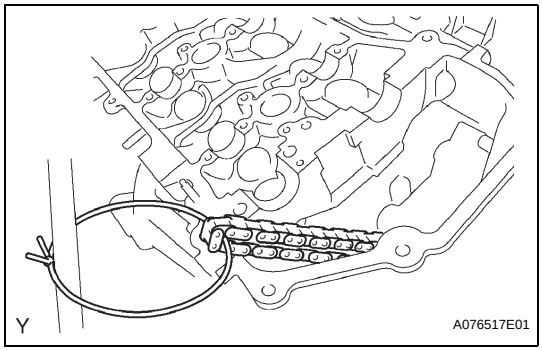

(g) Tie the No. 1 chain with a piece of string as shown in the illustration.
NOTICE:
Be careful not to drop anything inside the timing chain cover.

18. REMOVE NO. 4 CAMSHAFT SUB-ASSEMBLY
NOTICE:
Keep the camshaft level while it is being removed. The camshaft thrust clearance is very small and failing to keep it level could crack or damage the cylinder head journal surface, which receives the thrust force. This could subsequently lead the camshaft to seize or break. Perform the following steps to avoid such problems.

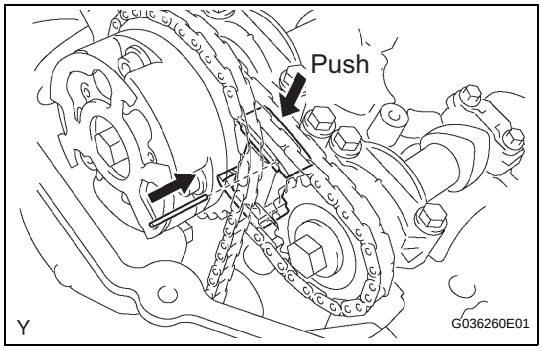

(a) While pushing down the No. 3 chain tensioner, insert a pin of ϕ 1.0 mm (0.039 in.) into the hole to fix it.

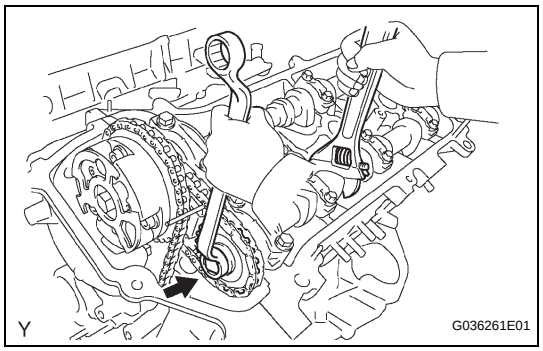

(b) Hold the hexagonal portion of the No. 4 camshaft with a wrench, and remove the camshaft timing gear set bolt.
NOTICE:
Be careful not to damage the cylinder head or valve lifter with the wrench.

(c) Separate the camshaft timing gear from the No. 4 camshaft.

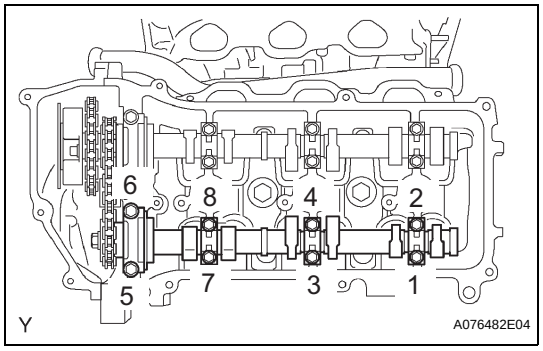

(d) Using several steps, uniformly loosen and remove the 8 bearing cap bolts in the sequence shown in the illustration.

(e) Remove the 4 bearing caps and No. 4 camshaft.

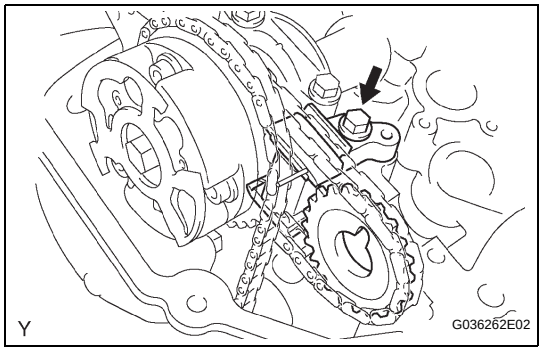

19. REMOVE NO. 3 CHAIN TENSIONER ASSEMBLY

(a) Remove the No. 3 chain tensioner bolt, then remove the No. 3 chain tensioner and camshaft timing gear.

20. REMOVE NO. 3 CAMSHAFT SUB-ASSEMBLY

NOTICE:
Keep the camshaft level while it is being removed. The camshaft thrust clearance is very small and failing to keep it level could crack or damage the cylinder head journal surface, which receives the thrust force. This could subsequently lead the camshaft to seize or break. Perform the following steps to avoid such problems.

(a) Release the chain tension between the camshaft timing gear (bank 2) and crankshaft timing gear by turning the crankshaft pulley counterclockwise slightly.

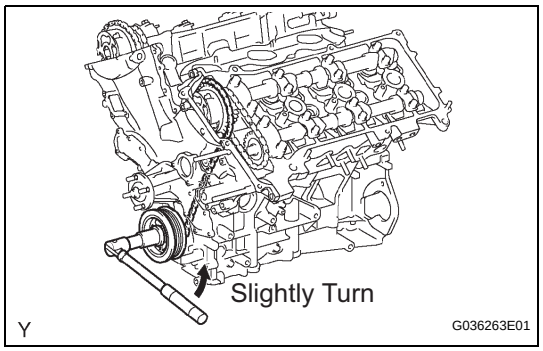

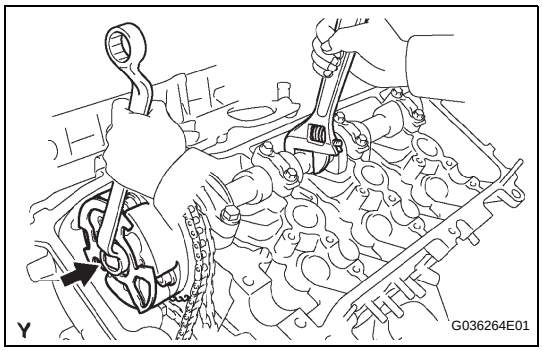

(b) Hold the hexagonal portion of the No. 3 camshaft with a wrench, then loosen the camshaft timing gear set bolt.
NOTICE:
- **Be careful not to damage the cylinder head or valve lifter with the wrench.**
- **Do not disassemble the camshaft timing gear assembly.**

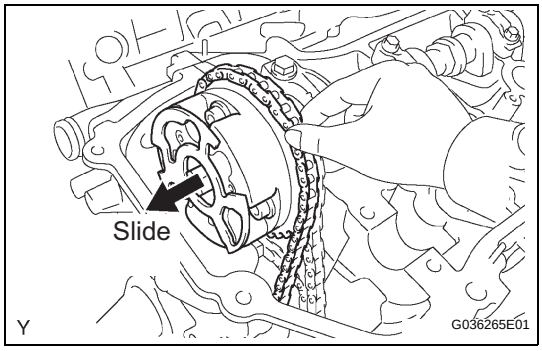

(c) Slide the camshaft timing gear and separate the No. 1 chain from the camshaft timing gear.

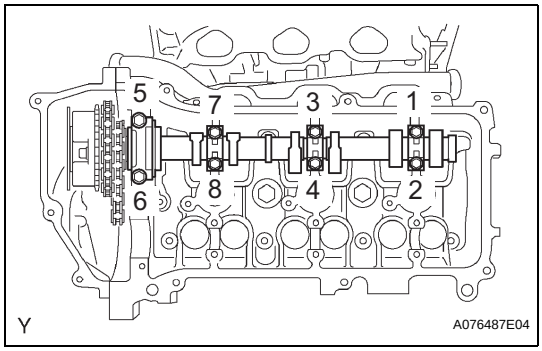

(d) Using several steps, uniformly loosen and remove the 8 bearing cap bolts in the sequence shown in the illustration.
(e) Remove the 4 bearing caps.

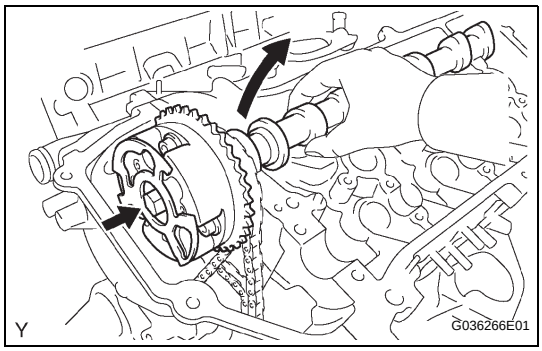

(f) Remove the camshaft timing gear set bolt with the No. 3 camshaft lifted up, then remove the No. 3 camshaft and camshaft timing gear with No. 2 chain.

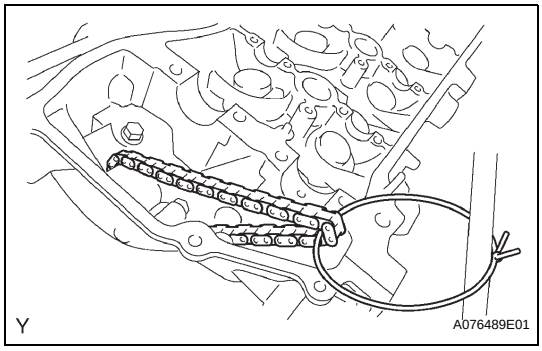

(g) Tie the No. 1 chain with a piece of string as shown in the illustration.
NOTICE:
Be careful not to drop anything inside the timing chain cover.

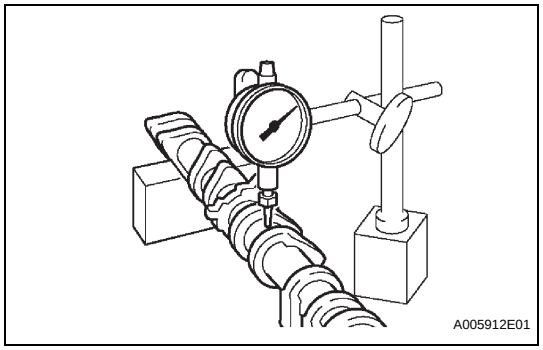

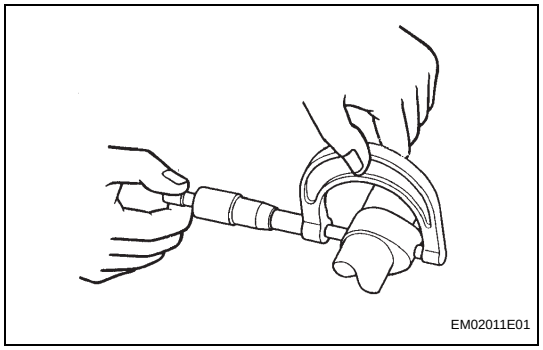

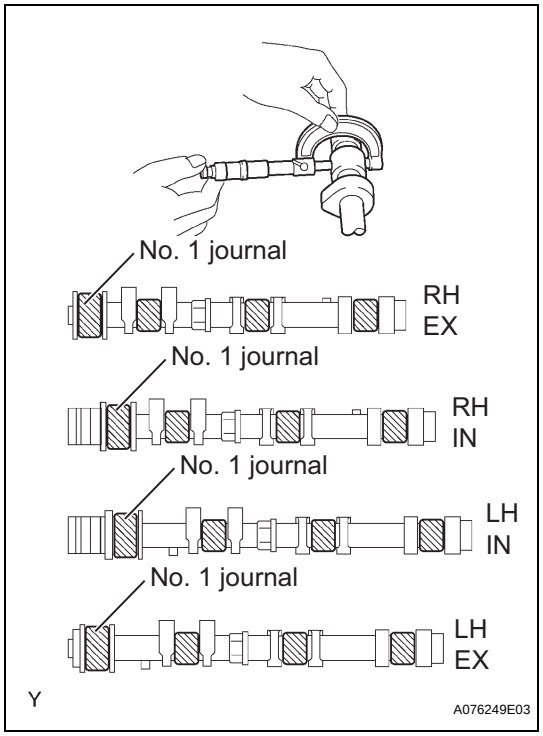

INSPECTION

1. INSPECT CAMSHAFTS

(a) Inspect the camshaft for runout.

(1) Place the camshaft on V-blocks.

(2) Using a dial indicator, measure the circle runout at the center journal.

Maximum runout:
0.06 mm (0.0024 in.)

If the circle runout is greater than the maximum, replace the camshaft.

(b) Inspect the cam lobes.

(1) Using a micrometer, measure the cam lobe height.

Standard cam lobe height:
Intake:
44.168 to 44.268 mm (1.7389 to 1.7428 in.)
Exhaust:
44.580 to 44.680 mm (1.7551 to 1.7591 in.)
Minimum cam lobe height:
Intake:
44.018 mm (1.7330 in.)
Exhaust:
44.430 mm (1.7492 in.)

If the cam lobe height is less than the minimum, replace the camshaft.

(c) Inspect the camshaft journals.

(1) Using a micrometer, measure the journal diameter.

No. 1 journal diameter:
35.971 to 35.985 mm (1.4162 to 1.4167 in.)
Other journal diameters:
22.959 to 22.975 mm (0.9039 to 0.9045 in.)

If the journal diameter is not as specified, check the oil clearance.

2. INSPECT CAMSHAFT TIMING GEAR ASSEMBLY

(a) Fix the intake camshaft in a vise.

NOTICE:
Be careful not to damage the camshaft.

EM

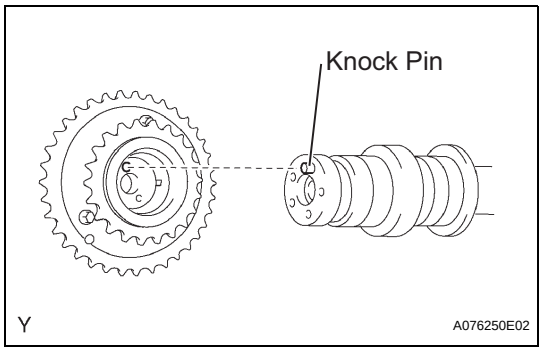

(b) Align the knock pin hole in the camshaft timing gear assembly with the knock pin of the camshaft, and install the camshaft timing gear assembly with the bolt.
Torque: 100 N*m (1,020 kgf*cm, 74 ft.*lbf)

(c) Confirm that the camshaft timing gear assembly is locked.

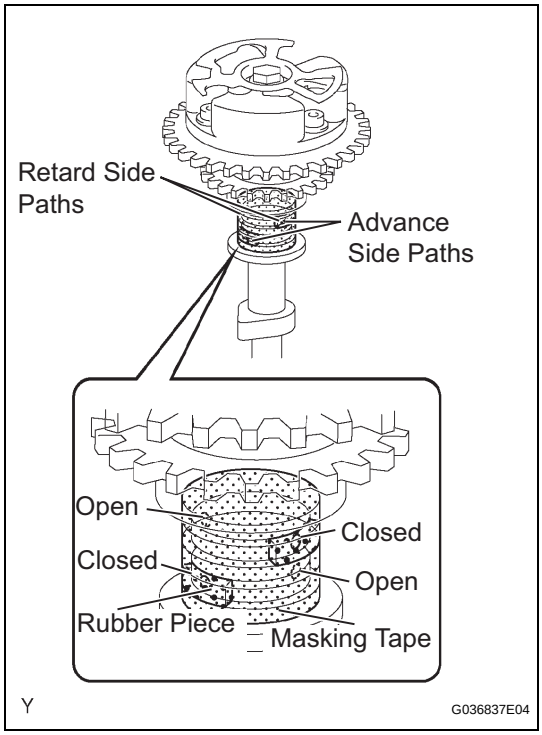

(d) Release that lock pin.

(1) Cover the 4 oil paths of the cam journal with masking tape as shown in the illustration.
HINT:
One of the 2 grooves on the cam journal is for the retard side path (upper) and the other is for the advance side path (lower). Each groove has 2 oil paths. Plug one of the oil paths for each groove with a piece of rubber before wrapping the cam journal with tape.

(2) Puncture the tape covering the advance oil path and retard oil path on the opposite side of the groove as shown in the illustration.

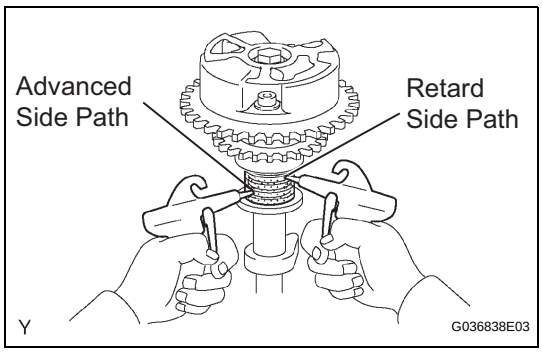

(3) Apply compressed air at 200 kPa (2.0 kgf/cm^2) into the 2 broken paths (the advance side path and the retard side path).
NOTICE:
Cover the paths with a shop rag or piece of cloth to avoid oil splashes.

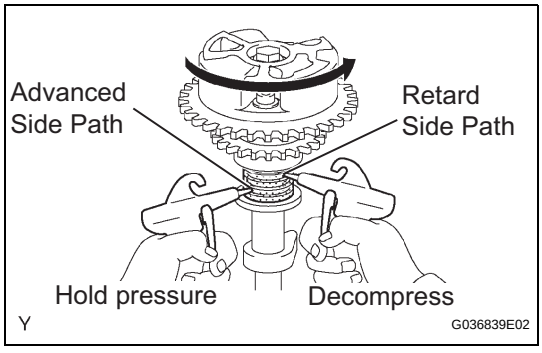

(4) Confirm that the camshaft timing gear assembly rotates in the timing advance direction when reducing the compressed air on the timing retard path.
HINT:
When the lock pin is released, the camshaft timing gear rotates in the advance direction.

(5) When the camshaft timing gear comes to the most advanced position, release the compressed air on the timing retard side path, and release that on the timing advance side path.
NOTICE:
Camshaft timing assembly gear occasionally shifts to the retard side abruptly if the air compression on the advanced side path is released first. This often causes breakage of the lock pin.

(e) Check the smooth revolution.
(1) Rotate the camshaft timing gear several times within the movable range except for the most retarded position and check it rotates smoothly.
Standard:
Moves smoothly in a range of about 31°
NOTICE:
Be sure to perform this check by hand, instead of using compressed air.

(f) Check that the lock is in the most retarded position.
(1) Confirm that the camshaft timing gear assembly is locked in the most retarded position.

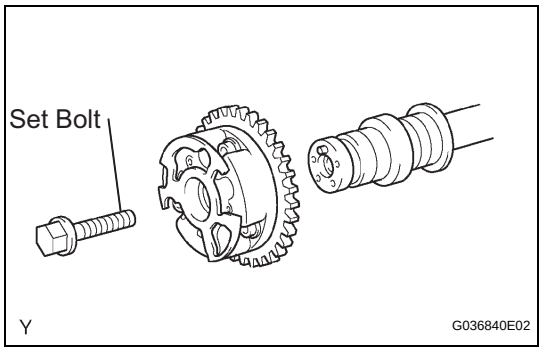

(g) Remove the set bolt, then remove the camshaft timing gear assembly.
NOTICE:
Do not remove the other 3 bolts.

EM

INSTALLATION

1. INSTALL NO. 3 CAMSHAFT SUB-ASSEMBLY

NOTICE:

Keep the camshaft level while it is being removed. The camshaft thrust clearance is very small and failing to keep it level could crack or damage the cylinder head journal surface, which receives the thrust force. This could subsequently lead the camshaft to seize or break. Perform the following steps to avoid such problems.

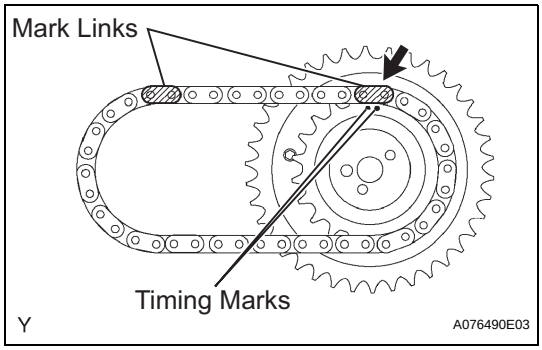

(a) Align the yellow mark link with the timing mark (2 dot marks) of the camshaft timing gear as shown in the illustration.

(b) Apply new engine oil to the thrust portion and journal of the camshafts.

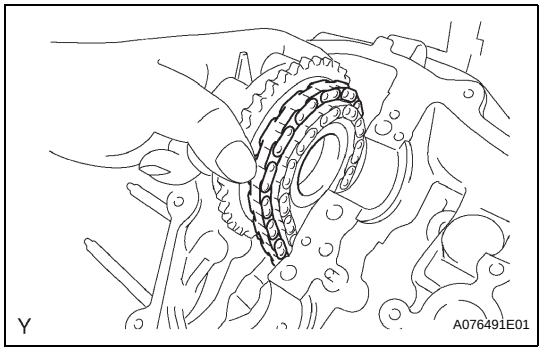

(c) Temporarily put the No. 1 chain on the No. 2 chain of the camshaft timing gear.

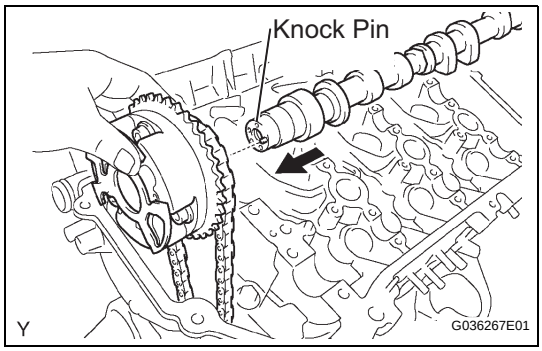

(d) Align the knock pin hole in the camshaft timing gear with the knock pin of the No. 3 camshaft, and insert the No. 3 camshaft into the camshaft timing gear.

(e) Temporarily install the camshaft timing gear set bolt.

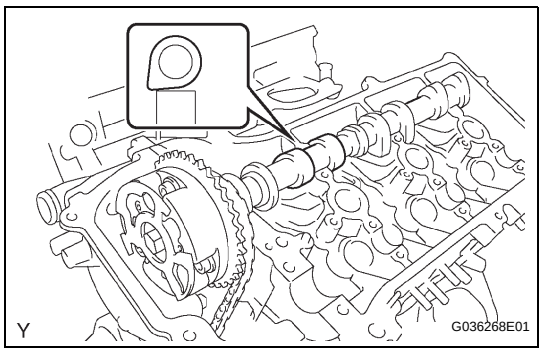

(f) Set the No. 3 camshaft onto the bank 2 cylinder head with the cam lobes of the No. 2 cylinder facing downward as shown in the illustration.

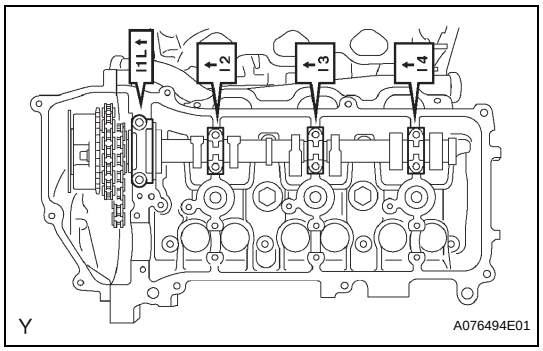

(g) Install the 4 bearing caps in the proper locations as shown.
(h) Apply a light coat of engine oil to the threads and under the heads of the bearing cap bolts.

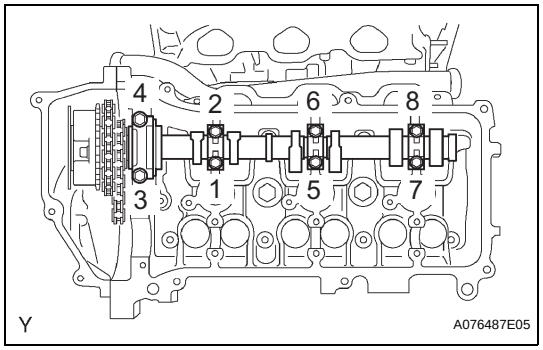

(i) Using several steps, uniformly install and tighten the 8 bearing cap bolts in the sequence shown in the illustration.
Torque: 10 mm (0.39 in.) head
9.0 N*m (92 kgf*cm, 80 in.*lbf)
12 mm (0.47 in.) head
24 N*m (245 kgf*cm, 18 ft.*lbf)

EM

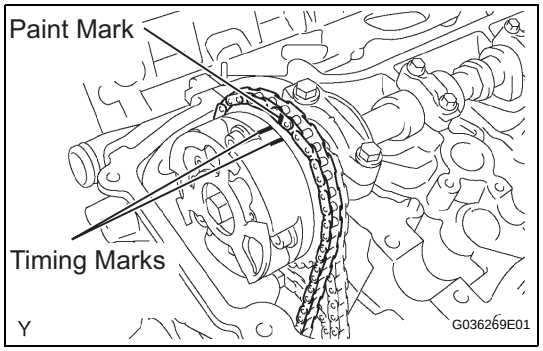

(j) Align the paint mark of the No. 1 chain with the timing marks of the camshaft timing gear.

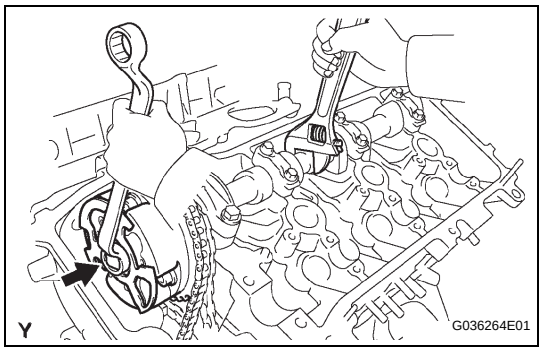

(k) Hold the hexagonal portion of the No. 3 camshaft with a wrench, and tighten the camshaft timing gear set bolt.
Torque: 100 N*m (1,020 kgf*cm, 74 ft.*lbf)

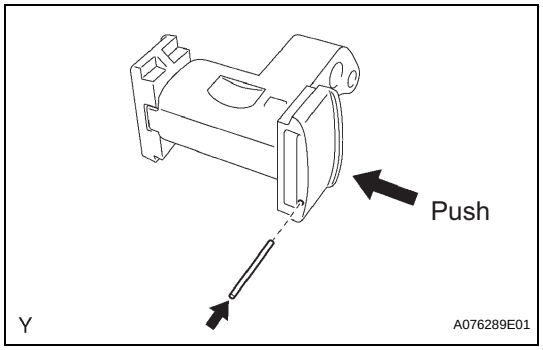

2. INSTALL NO. 3 CHAIN TENSIONER ASSEMBLY
(a) While pushing in the tensioner, insert a pin of ϕ 1.0 mm (0.039 in.) into the hole to hold it.

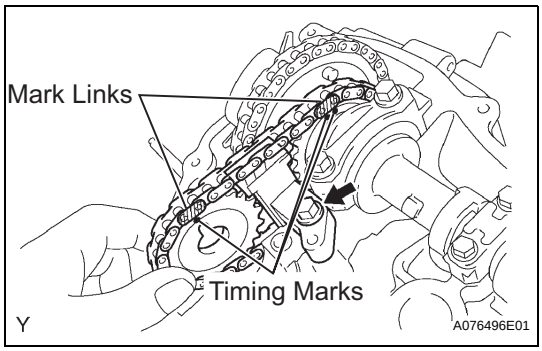

(b) Temporarily install the camshaft timing gear and No. 3 chain tensioner and align the yellow mark links with the timing marks (1 dot mark and 2 dot marks) of the camshaft timing gears.
(c) Tighten the No. 3 chain tensioner bolt.
Torque: 19 N*m (194 kgf*cm, 14 ft.*lbf)

3. INSTALL NO. 4 CAMSHAFT SUB-ASSEMBLY
NOTICE:
Keep the camshaft level while it is being removed. The camshaft thrust clearance is very small and failing to keep it level could crack or damage the cylinder head journal surface, which receives the thrust force. This could subsequently lead the camshaft to seize or break. Perform the following steps to avoid such problems.

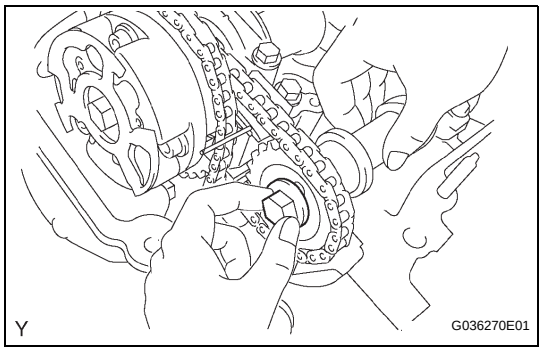

(a) Align the knock pin hole in the camshaft timing gear with the knock pin of the No. 4 camshaft, and insert the No. 4 camshaft into the camshaft timing gear.
(b) Temporarily install the camshaft timing gear set bolt.

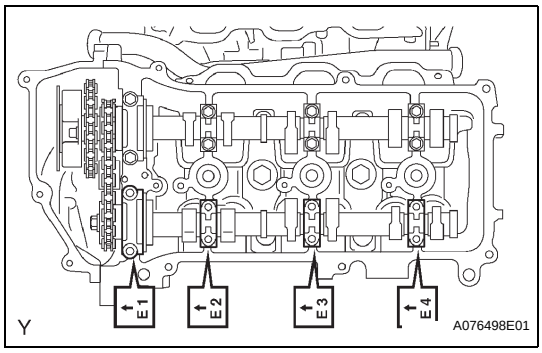

(c) Install the 4 bearing caps in the proper locations as shown.
(d) Apply a light coat of engine oil to the threads of the bearing cap bolts.

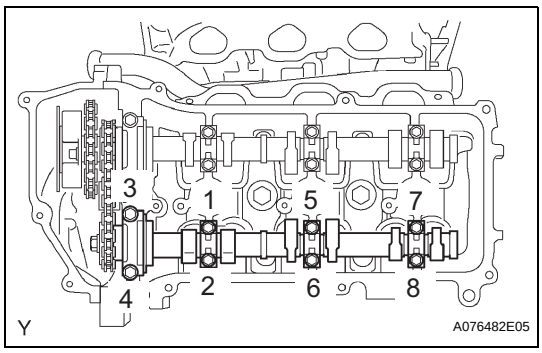

(e) Using several steps, uniformly install and tighten the 8 bearing cap bolts in the sequence shown in the illustration.
Torque: 10 mm (0.39 in.) head
9.0 N*m (92 kgf*cm, 80 in.*lbf)
12 mm (0.47 in.) head
24 N*m (245 kgf*cm, 18 ft.*lbf)

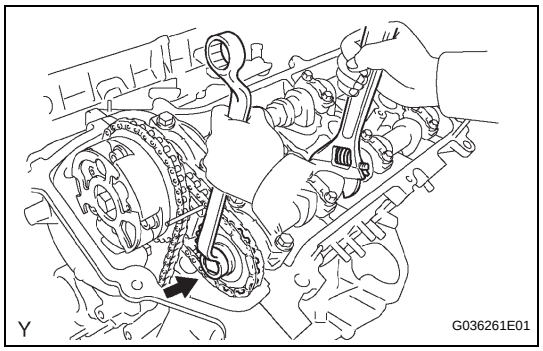

(f) Hold the hexagonal portion of the No. 4 camshaft with a wrench, and tighten the camshaft timing gear set bolt.
Torque: 100 N*m (1,020 kgf*cm, 74 ft.*lbf)

(g) Remove the pin from the No. 3 chain tensioner.

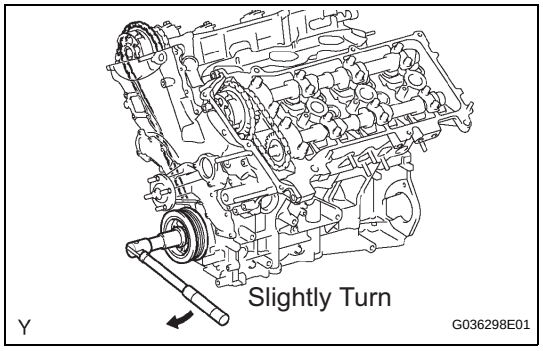

(h) Release the chain tension between the camshaft timing gear (bank 1) and crankshaft timing gear by turning the crankshaft pulley clockwise slightly.

4. INSTALL CAMSHAFT

NOTICE:

Keep the camshaft level while it is being removed. The camshaft thrust clearance is very small and failing to keep it level could crack or damage the cylinder head journal surface, which receives the thrust force. This could subsequently lead the camshaft to seize or break. Perform the following steps to avoid such problems.

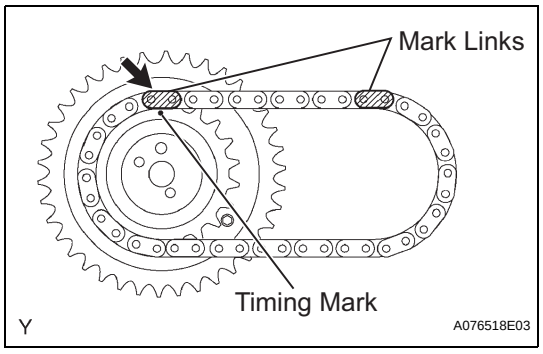

(a) Align the yellow mark link with the timing mark (1 dot mark) of the camshaft timing gear as shown in the illustration.

(b) Apply new engine oil to the thrust portion and journal of the camshafts.

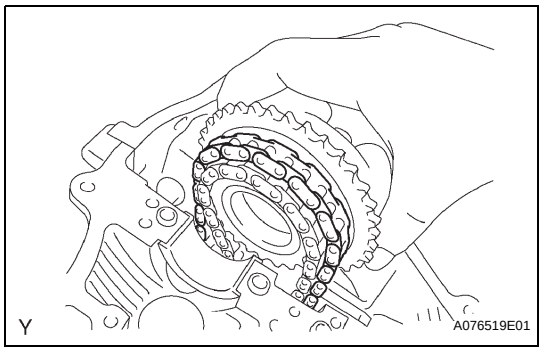

(c) Temporarily install the No. 1 chain onto the No. 2 chain of the camshaft timing gear.

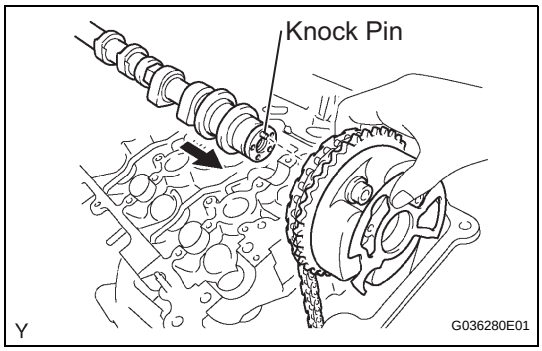

(d) Align the knock pin hole in the camshaft timing gear with the knock pin of the No. 1 camshaft, and insert the No. 1 camshaft into the camshaft timing gear.
(e) Temporarily install the camshaft timing gear set bolt.

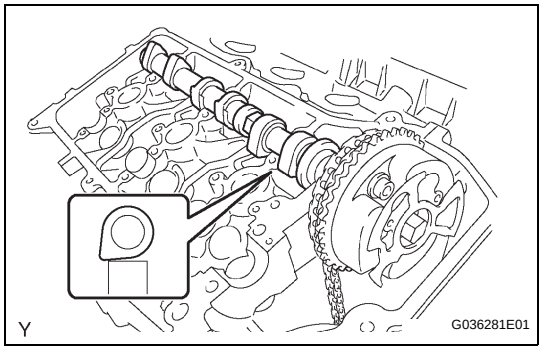

(f) Install the No. 1 camshaft onto the bank 1 cylinder head with the cam lobes of the No. 1 cylinder facing downward as shown in the illustration.

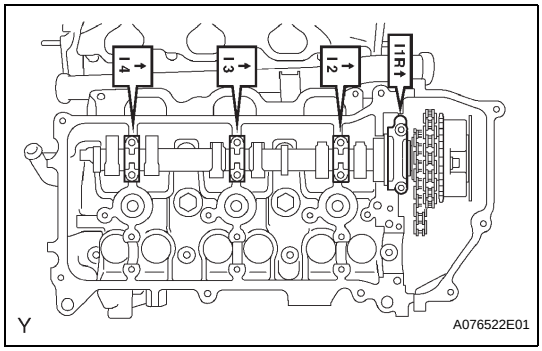

(g) Install the 4 bearing caps in the proper locations as shown.
(h) Apply a light coat of engine oil to the threads and under the heads of the bearing cap bolts.

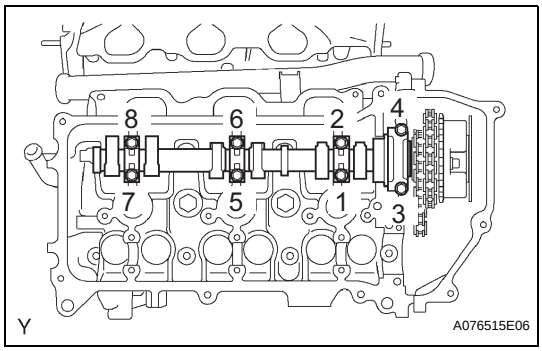

(i) Using several steps, uniformly install and tighten the 8 bearing cap bolts in the sequence shown in the illustration.
Torque: 10 mm (0.39 in.) head
9.0 N*m (92 kgf*cm, 80 in.*lbf)
12 mm (0.47 in.) head
24 N*m (245 kgf*cm, 18 ft.*lbf)

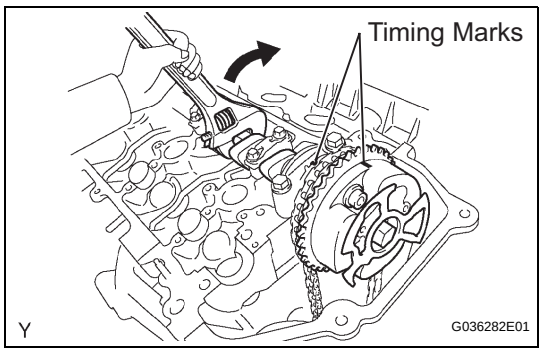

(j) Rotate the No. 1 camshaft clockwise using a wrench so that the timing mark of the camshaft timing gear is aligned with the timing mark of the camshaft bearing cap.

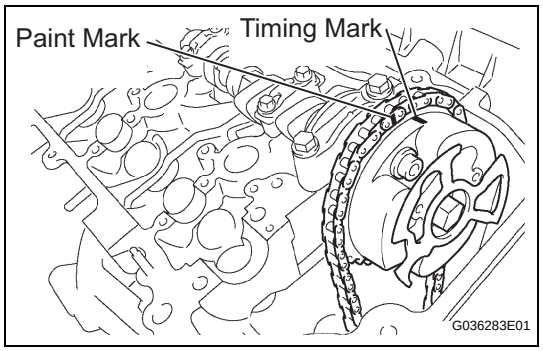

(k) Align the paint mark of the No. 1 chain with the timing mark of the camshaft timing gear.

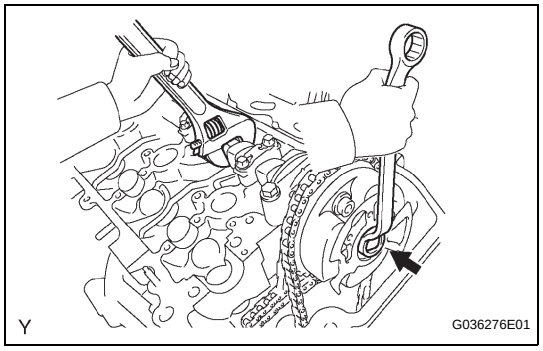

(l) Hold the hexagonal portion of the No. 1 camshaft with a wrench, and tighten the camshaft timing gear set bolt.
Torque: 100 N*m (1,020 kgf*cm, 74 ft.*lbf)

EM

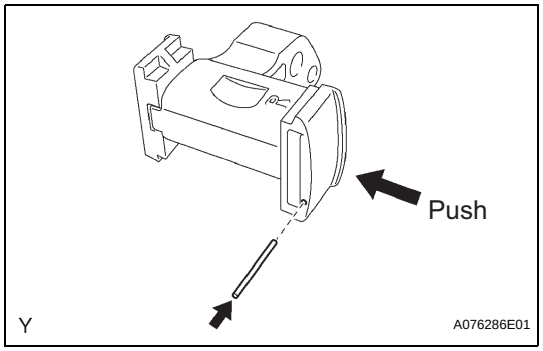

5. INSTALL NO. 2 CHAIN TENSIONER ASSEMBLY

(a) While pushing in the tensioner, insert a pin of ϕ 1.0 mm (0.039 in.) into the hole to fix it.

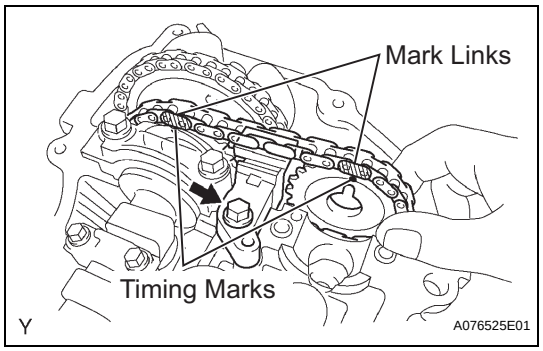

(b) Temporarily install the camshaft timing gear and No. 2 chain tensioner and align the yellow mark links with the timing marks (1 dot mark) of the camshaft timing gears.

(c) Tighten the No. 2 chain tensioner bolt.
Torque: 19 N*m (194 kgf*cm, 14 ft.*lbf)

6. INSTALL NO. 2 CAMSHAFT

NOTICE:
Keep the camshaft level while it is being removed. The camshaft thrust clearance is very small and failing to keep it level could crack or damage the cylinder head journal surface, which receives the thrust force. This could subsequently lead the camshaft to seize or break. Perform the following steps to avoid such problems.

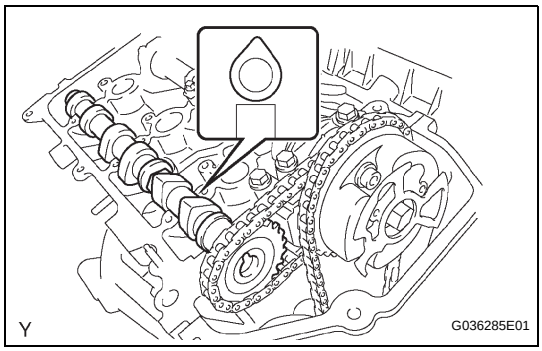

(a) Install the No. 2 camshaft onto the bank 1 cylinder head with the cam lobes of No. 1 cylinder facing upward as shown in the illustration.

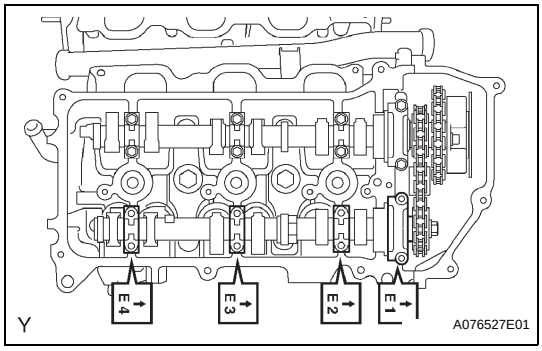

(b) Install the 4 bearing caps in the proper locations as shown.
(c) Apply a light coat of engine oil to the threads and under the heads of the bearing cap bolts.

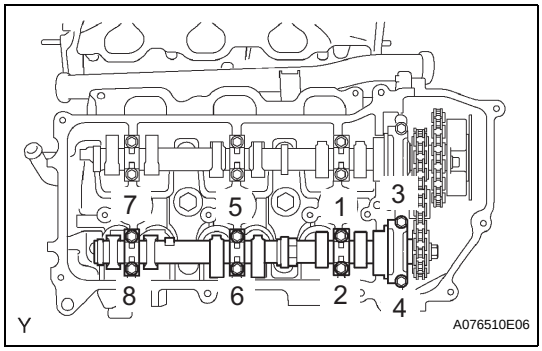

(d) Using several steps, uniformly install and tighten the 8 bearing cap bolts in the sequence shown in the illustration.
Torque: 10 mm (0.39 in.) head
9.0 N*m (92 kgf*cm, 80 in.*lbf)
12 mm (0.47 in.) head
24 N*m (245 kgf*cm, 18 ft.*lbf)

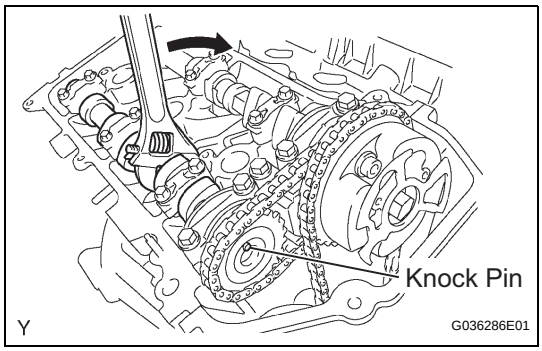

(e) Rotate the No. 2 camshaft clockwise using a wrench so that the knock pin of the No. 2 camshaft is aligned with the knock pin hole in the camshaft timing gear.

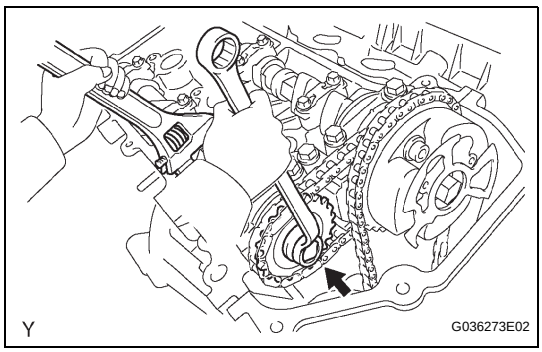

(f) Hold the hexagonal portion of the No. 2 camshaft with a wrench, and install the camshaft timing gear set bolt.
Torque: 100 N*m (1,020 kgf*cm, 74 ft.*lbf)
(g) Remove the pin from the No. 2 chain tensioner.

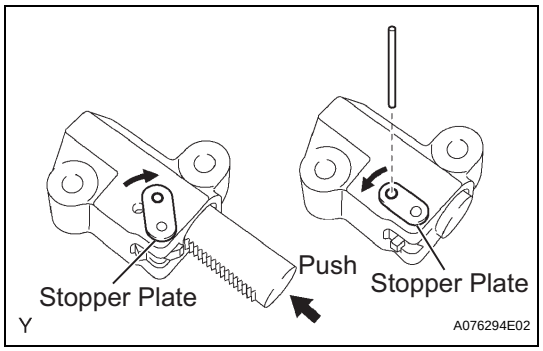

7. INSTALL NO. 1 CHAIN TENSIONER ASSEMBLY

(a) While turning the stopper plate of the No. 1 chain tensioner clockwise, push in the plunger of the No. 1 chain tensioner as shown in the illustration.

(b) While turning the stopper plate of the tensioner counterclockwise, insert a bar of ϕ 3.5 mm (0.138 in.) into the holes in the stopper plate and No. 1 chain tensioner to fix the stopper plate.

(c) Install the No. 1 chain tensioner with the 2 bolts.
Torque: 10 N*m (102 kgf*cm, 7.4 ft.*lbf)

(d) Remove the bar from the No. 1 chain tensioner.

(e) Install a new gasket and the timing chain cover plate with the 4 bolts.
Torque: 9.0 N*m (92 kgf*cm, 80 in.*lbf)

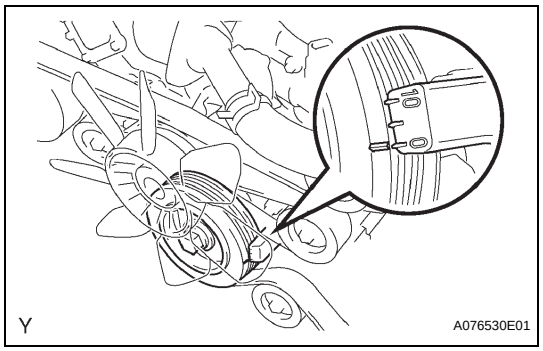

(f) Turn the crankshaft pulley 2 complete revolutions slowly until its groove and the "0" timing mark of the timing chain cover are aligned.

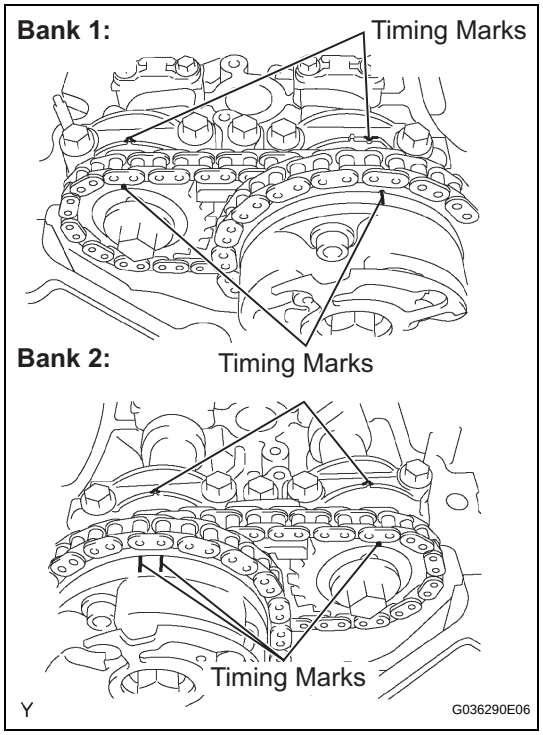

(g) Check that the timing marks of the camshaft timing gears are aligned with the timing marks of the bearing cap as shown in the illustration.

8. SET CYLINDER TO TDC/COMPRESSION (See page EM-8)

9. INSPECT VALVE CLEARANCE (See page EM-9)

10. ADJUST VALVE CLEARANCE (See page EM-10)

11. INSTALL CYLINDER HEAD COVER SUB-ASSEMBLY LH

(a) Remove any old packing (FIPG) material.
HINT:
Do not drop any oil on the contact surfaces of the cylinder head, timing chain cover and cylinder head cover.

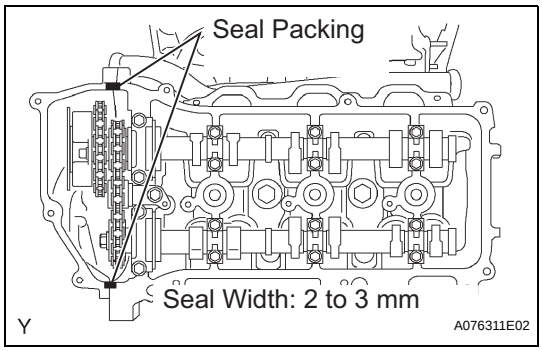

(b) Apply a continuous bead of seal packing (diameter 2 to 3 mm (0.08 to 0.12 in.)) to the cylinder head and timing chain cover as shown in the illustration.
Seal packing:
Toyota Genuine Seal Packing Black, Three Bond 1207B or the equivalent
NOTICE:
Install the cylinder head cover within 3 minutes of applying the seal packing. Tighten the cylinder head cover bolts and nuts within 15 minutes of installing the cylinder head cover. Otherwise, the seal packing must be removed and reapplied.

(c) Install the seal washers onto the bolts.

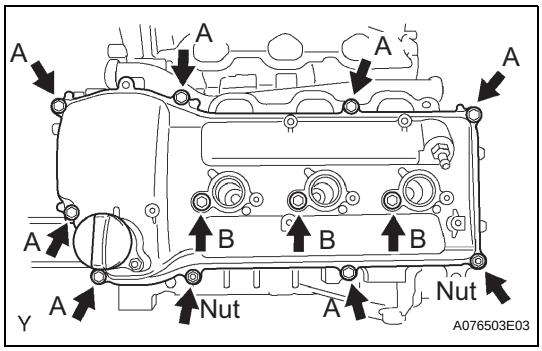

(d) Install the cylinder head cover with the 10 bolts and 2 nuts. Tighten the bolts and nuts uniformly in several steps.
Torque: Bolt A
10 N*m (102 kgf*cm, 7.4 ft.*lbf)
Bolt B
9.0 N*m (92 kgf*cm, 80 in.*lbf)
Nut
9.0 N*m (92 kgf*cm, 80 in.*lbf)
HINT:
Each bolt length is as follows.

Bolt	Length
A	25 mm (0.98 in.)
B	60 mm (2.36 in.)

12. INSTALL CYLINDER HEAD COVER SUB-ASSEMBLY

(a) Remove any old packing (FIPG) material.
HINT:
Do not drop any oil on the contact surfaces of the cylinder head, timing chain cover and cylinder head cover.

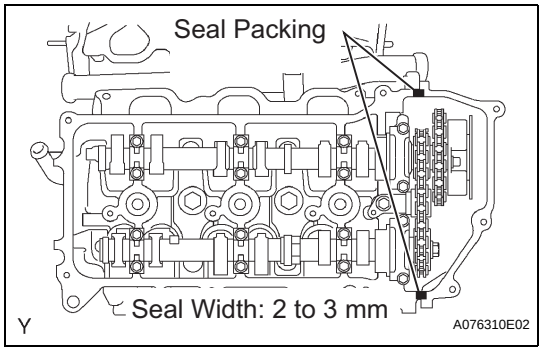

(b) Apply a continuous bead of seal packing (diameter 2 to 3 mm (0.08 to 0.12 in.)) to the cylinder head and timing chain cover as shown in the illustration.
Seal packing:
Toyota Genuine Seal Packing Black, Three Bond 1207B or the equivalent
NOTICE:
Install the cylinder head cover within 3 minutes of applying the seal packing. Tighten the cylinder head cover bolts and nuts within 15 minutes of installing the cylinder head cover. Otherwise, the seal packing must be removed and reapplied.

(c) Install the seal washers onto the bolts.

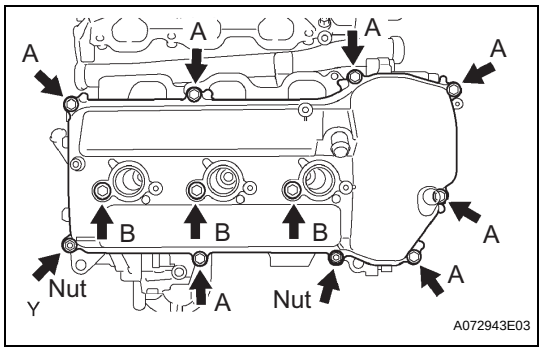

(d) Install the cylinder head cover with the 10 bolts and 2 nuts. Tighten the bolts and nuts uniformly in several steps.
Torque: Bolt A
10 N*m (102 kgf*cm, 7.4 ft.*lbf)
Bolt B
9.0 N*m (92 kgf*cm, 80 in.*lbf)
Nut
9.0 N*m (92 kgf*cm, 80 in.*lbf)
HINT:
Each bolt length is as follows.

Bolt	Length
A	25 mm (0.98 in.)
B	60 mm (2.36 in.)

13. **INSTALL IGNITION COIL ASSEMBLY (See page IG-8)**
14. **INSTALL INTAKE AIR SURGE TANK (See page FU-17)**
15. **INSTALL NO. 2 SURGE TANK STAY (See page FU-19)**
16. **INSTALL NO. 1 SURGE TANK STAY (See page FU-19)**
17. **INSTALL OIL BAFFLE PLATE (See page FU-19)**
18. **INSTALL THROTTLE BODY BRACKET (See page FU-19)**
19. **INSTALL AIR CLEANER ASSEMBLY (See page ES-431)**
20. **CONNECT CABLE TO NEGATIVE BATTERY TERMINAL**
Torque: 3.9 N*m (40 kgf*cm, 35 in.*lbf)
21. **ADD ENGINE COOLANT (See page CO-3)**
22. **CHECK FOR ENGINE COOLANT LEAKAGE (See page CO-4)**
23. **CHECK FOR ENGINE OIL LEAKAGE**
24. **INSPECT IGNITION TIMING (See page EM-1)**
25. **INSTALL V-BANK COVER (See page ES-431)**

CYLINDER HEAD

COMPONENTS

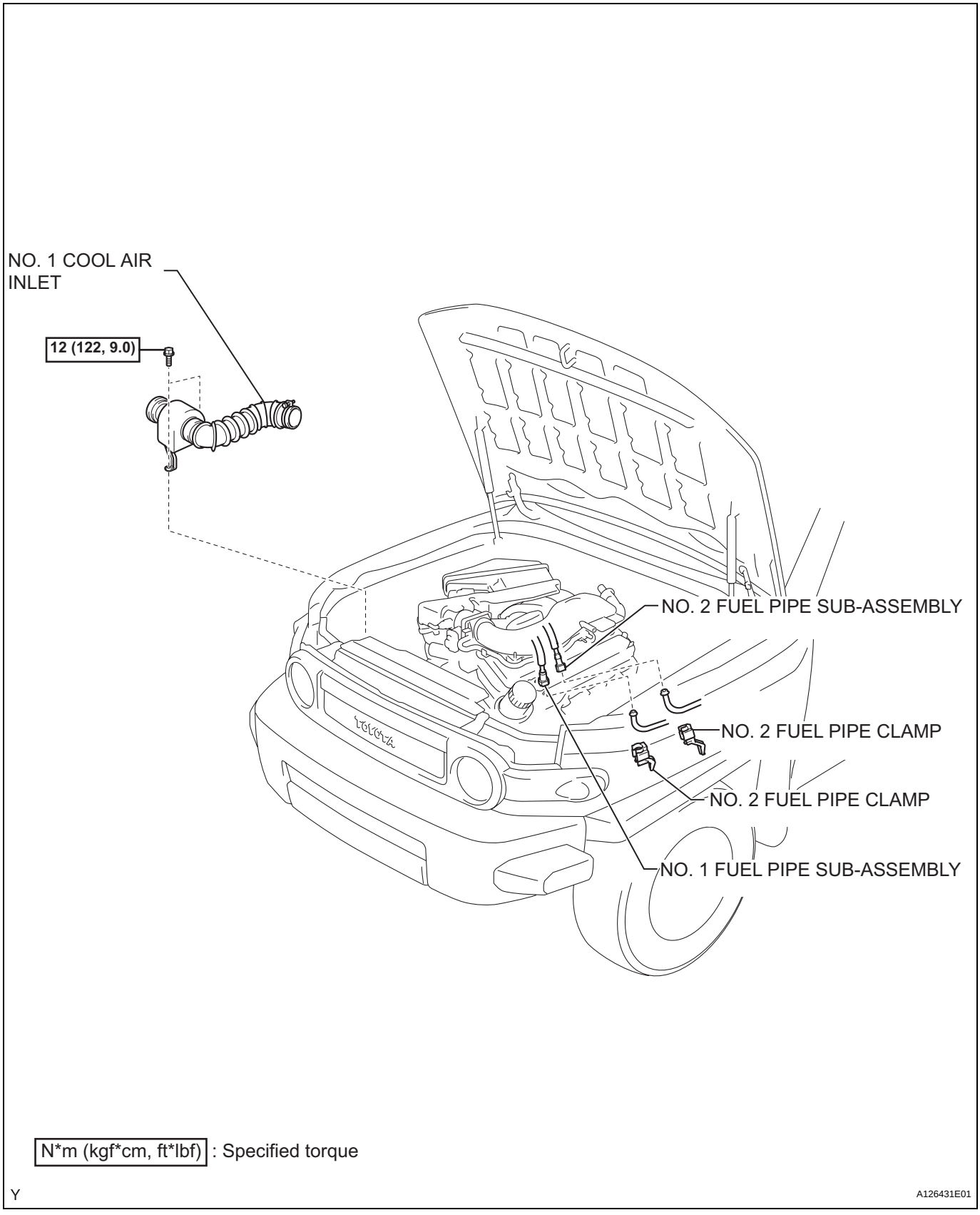

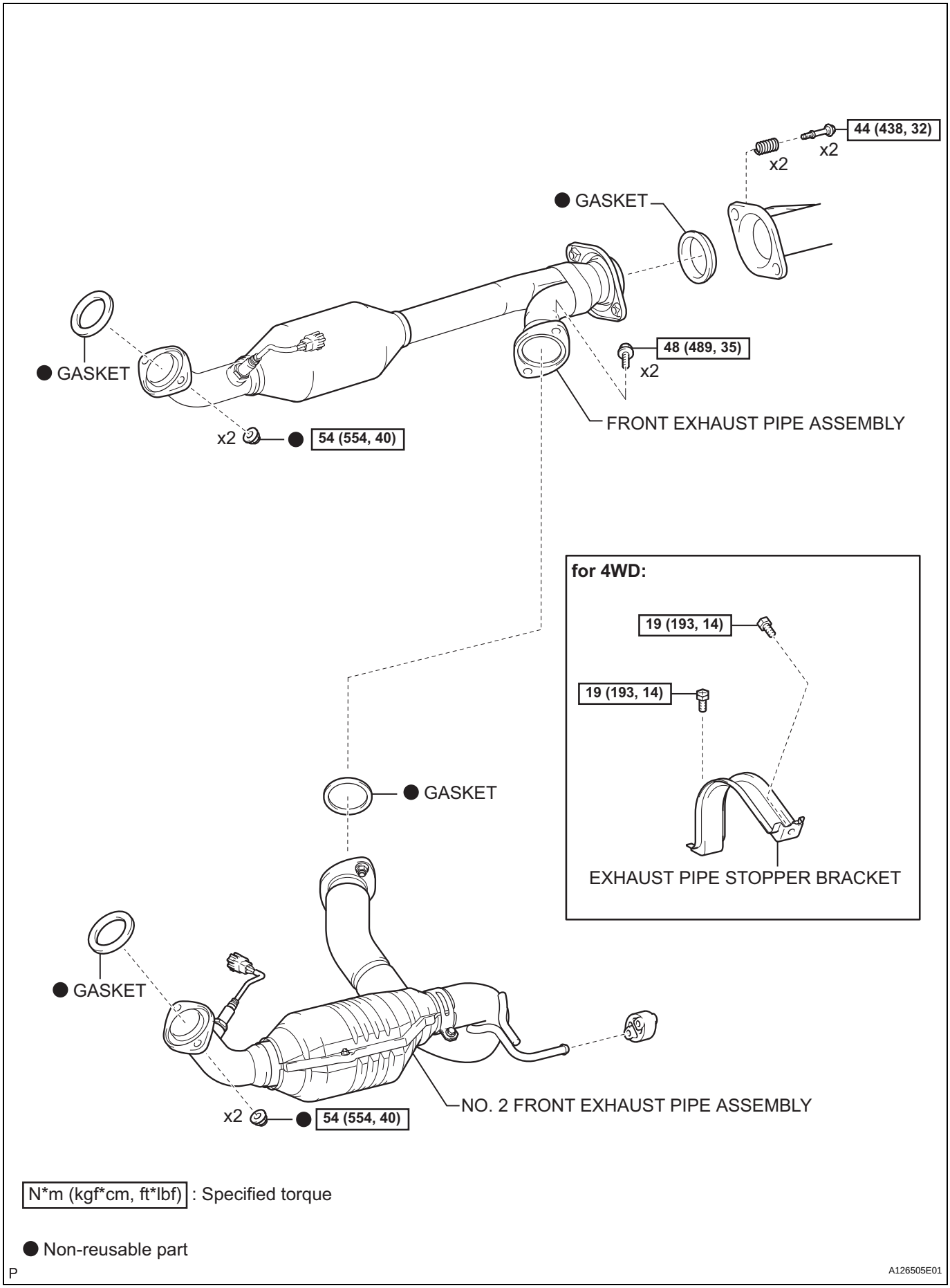
44 (438, 32)
x2
x2
GASKET
48 (489, 35)
x2
GASKET
x2
54 (554, 40)
FRONT EXHAUST PIPE ASSEMBLY
for 4WD:
19 (193, 14)
19 (193, 14)
EXHAUST PIPE STOPPER BRACKET
GASKET
GASKET
x2
54 (554, 40)
NO. 2 FRONT EXHAUST PIPE ASSEMBLY
N*m (kgf*cm, ft*lbf) : Specified torque
Non-reusable part
A126505E01

EM

P

EM

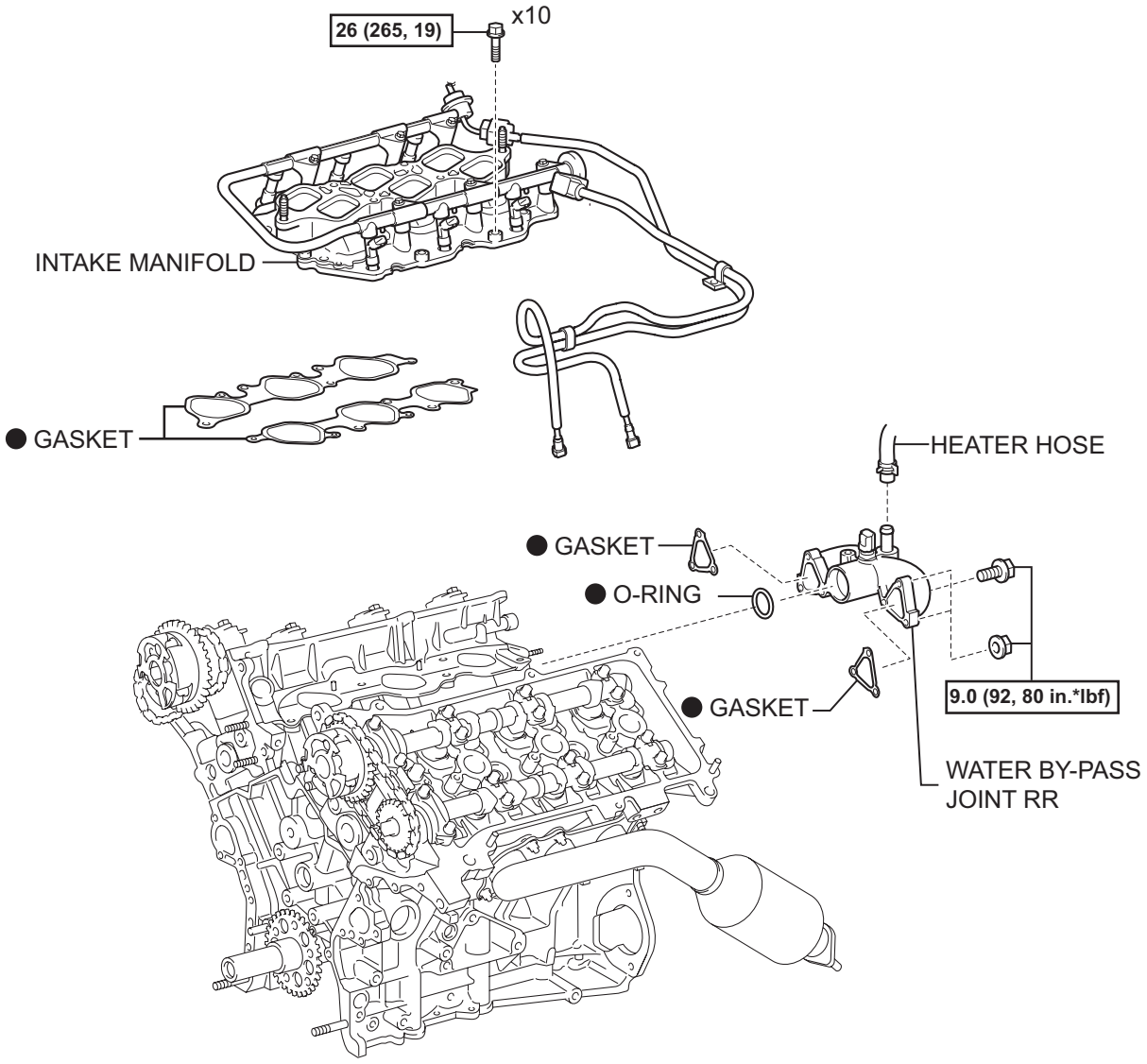

N*m (kgf*cm, ft*lbf) : Specified torque

● Non-reusable part

Y

A126432E01

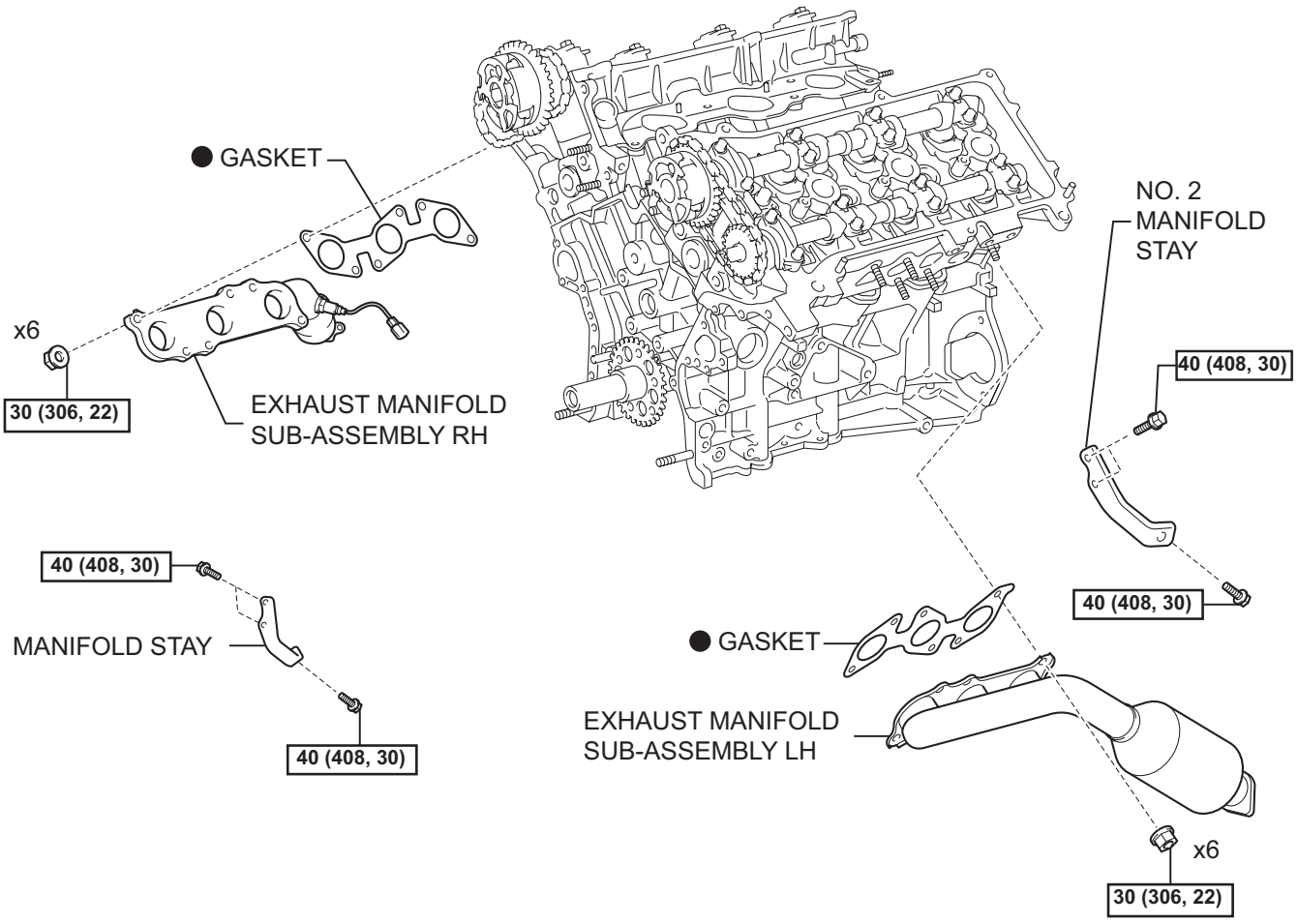

N*m (kgf*cm, ft*lbf) : Specified torque

● Non-reusable part

Y

A126433E01

EM

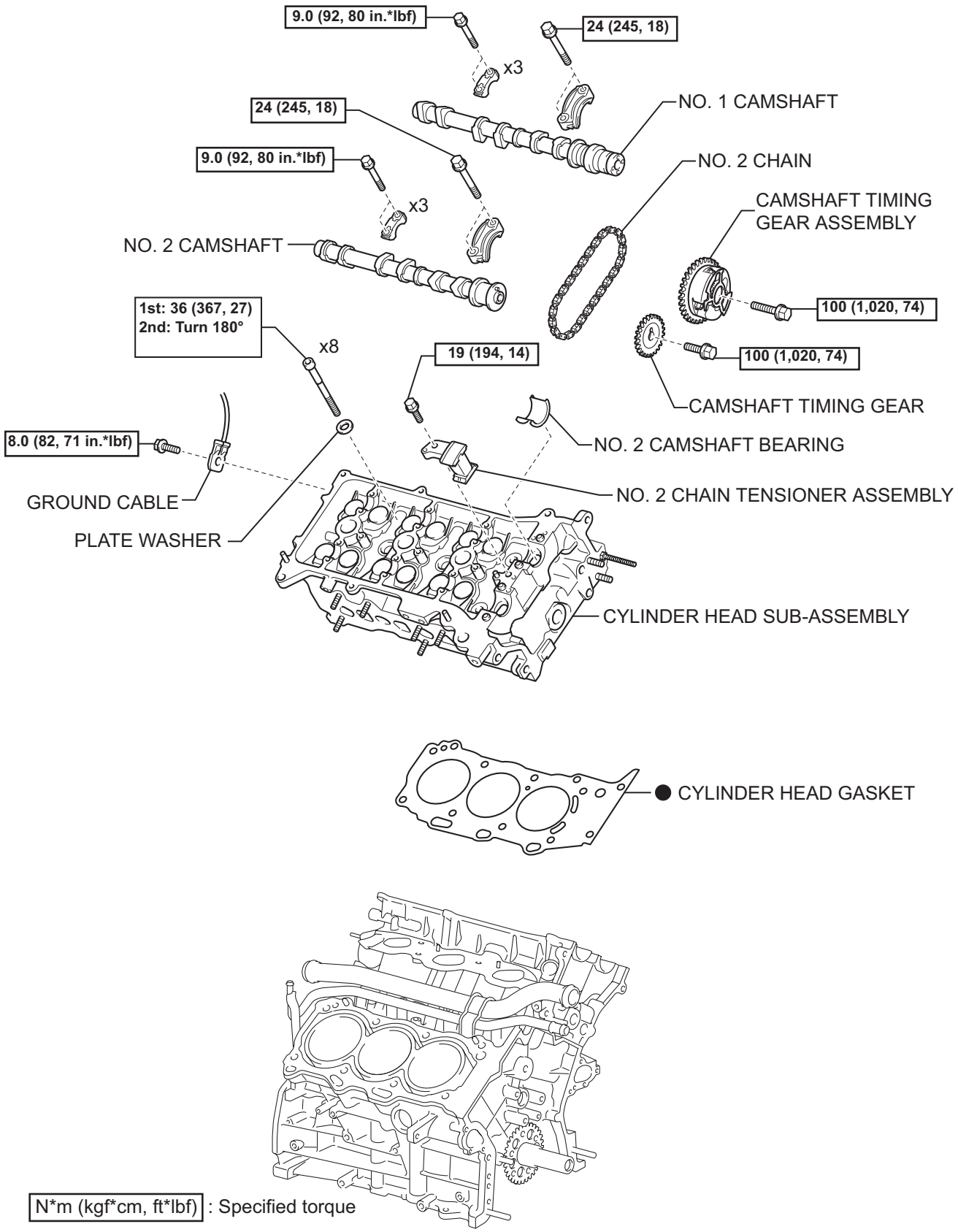
9.0 (92, 80 in.*lbf)
x3
24 (245, 18)
NO. 1 CAMSHAFT
24 (245, 18)
9.0 (92, 80 in.*lbf)
x3
NO. 2 CAMSHAFT
NO. 2 CHAIN
CAMSHAFT TIMING GEAR ASSEMBLY
100 (1,020, 74)
100 (1,020, 74)
CAMSHAFT TIMING GEAR
1st: 36 (367, 27)
2nd: Turn 180°
x8
19 (194, 14)
NO. 2 CAMSHAFT BEARING
8.0 (82, 71 in.*lbf)
GROUND CABLE
PLATE WASHER
NO. 2 CHAIN TENSIONER ASSEMBLY
CYLINDER HEAD SUB-ASSEMBLY
● CYLINDER HEAD GASKET
N*m (kgf*cm, ft*lbf) : Specified torque
● Non-reusable part
Y
A126434E01

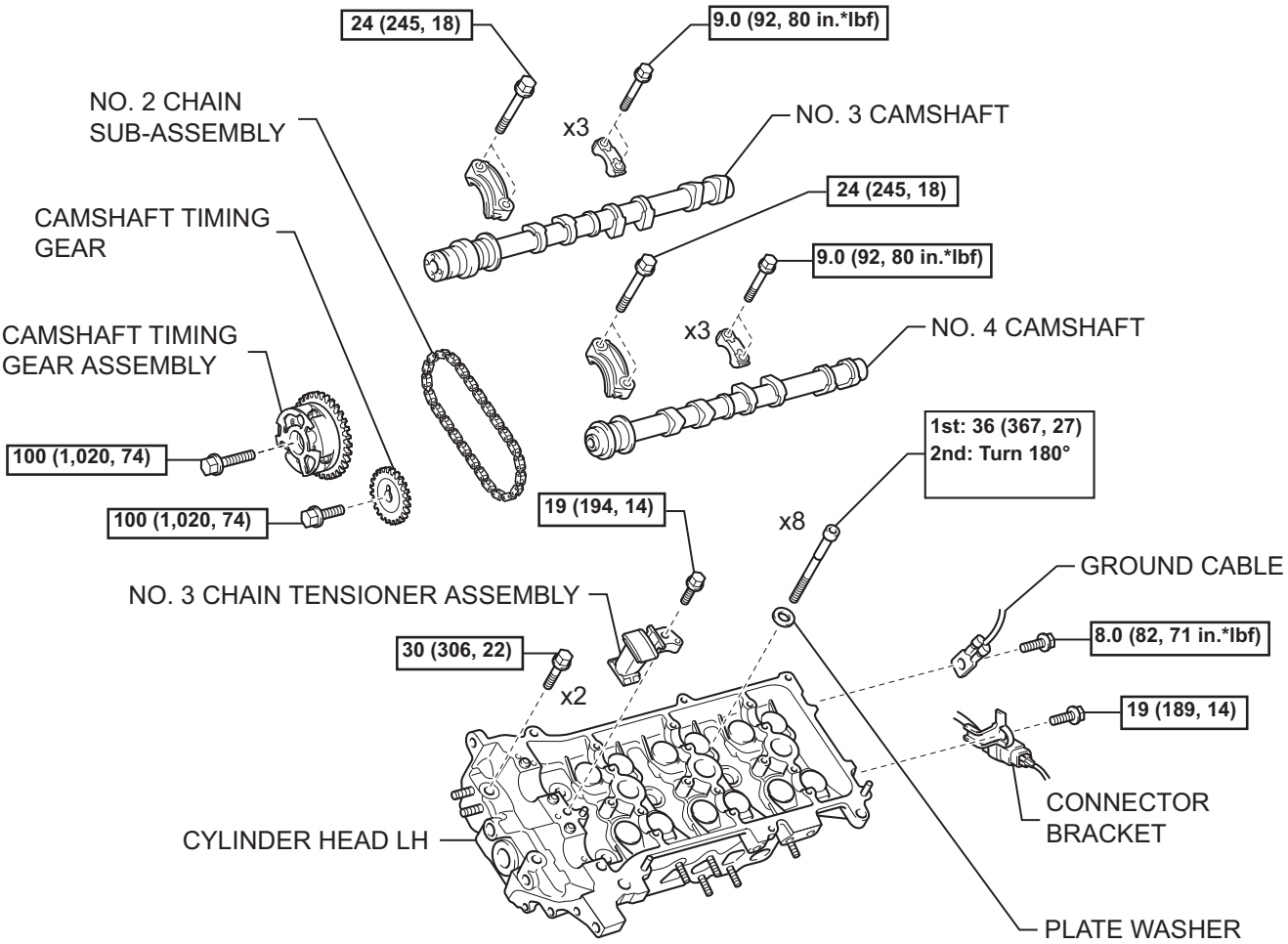
24 (245, 18)
9.0 (92, 80 in.*lbf)
x3
NO. 2 CHAIN SUB-ASSEMBLY
NO. 3 CAMSHAFT
24 (245, 18)
CAMSHAFT TIMING GEAR
9.0 (92, 80 in.*lbf)
x3
CAMSHAFT TIMING GEAR ASSEMBLY
NO. 4 CAMSHAFT
100 (1,020, 74)
1st: 36 (367, 27)
2nd: Turn 180°
19 (194, 14)
x8
100 (1,020, 74)
GROUND CABLE
NO. 3 CHAIN TENSIONER ASSEMBLY
8.0 (82, 71 in.*lbf)
30 (306, 22)
x2
19 (189, 14)
CONNECTOR BRACKET
CYLINDER HEAD LH
PLATE WASHER
● NO. 2 CYLINDER HEAD GASKET
N*m (kgf*cm, ft*lbf) : Specified torque
● Non-reusable part
Y
A126435E01

EM

EM

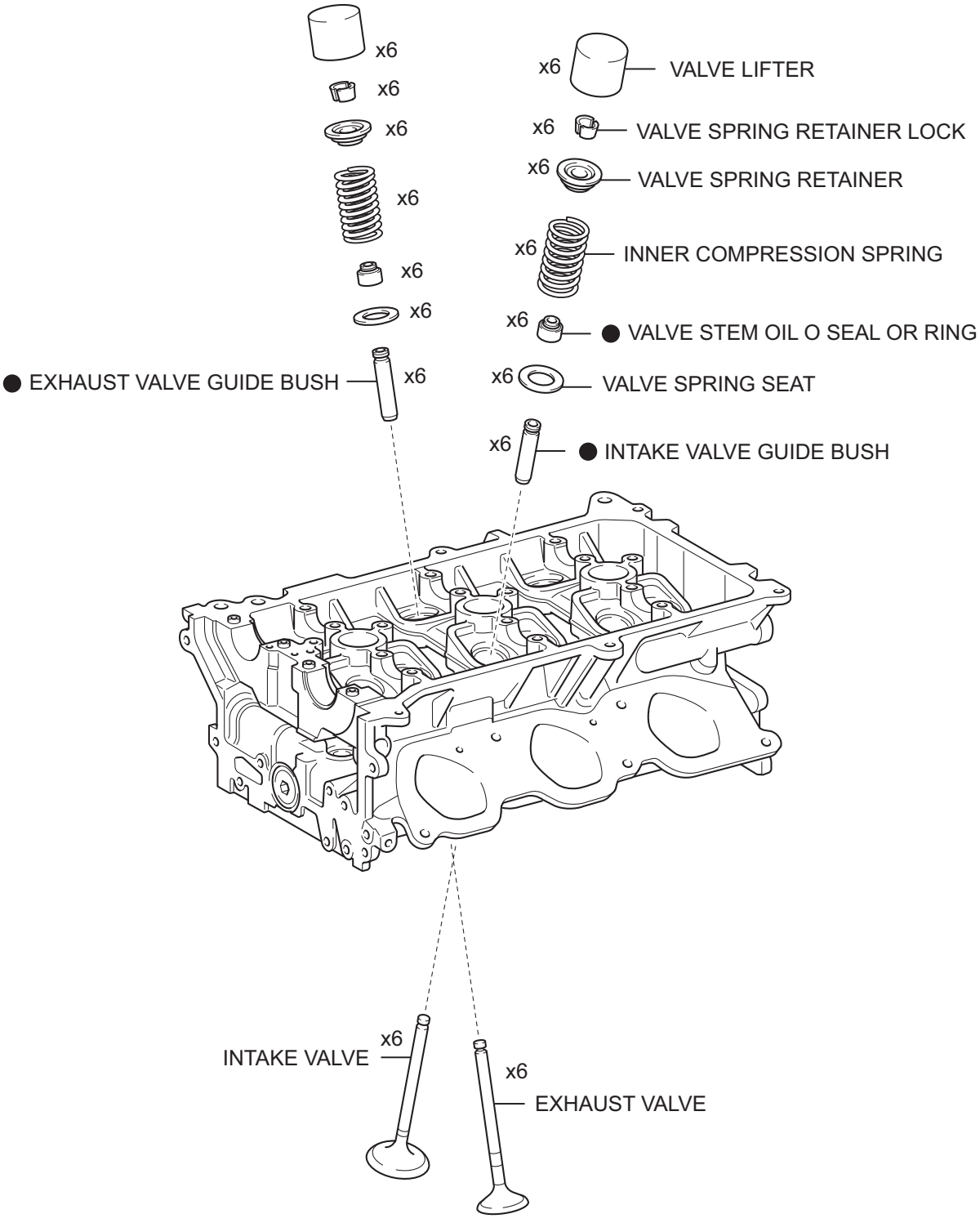

● Non-reusable part

A126376E01

REMOVAL

1. **DISCHARGE FUEL SYSTEM PRESSURE**
   (See page FU-1)

2. **REMOVE CHAIN SUB-ASSEMBLY**
   Refer to the procedures up to "REMOVE CHAIN SUB-ASSEMBLY" (See page EM-22).

3. **REMOVE NO. 1 COOL AIR INLET**
   (a) Remove the 2 bolts and the No. 1 cool air inlet.

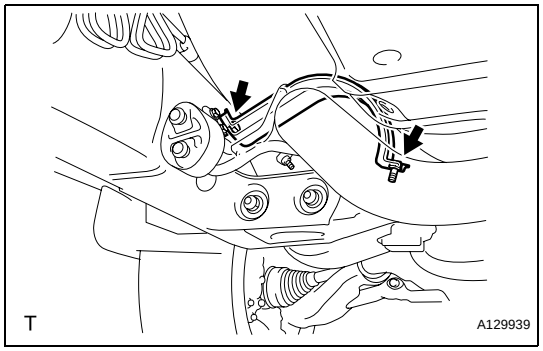

4. **REMOVE EXHAUST PIPE STOPPER BRACKET (for 4WD)**
   (a) Remove the 2 bolts, then remove the exhaust pipe stopper bracket.

5. **REMOVE NO. 2 FRONT EXHAUST PIPE ASSEMBLY**

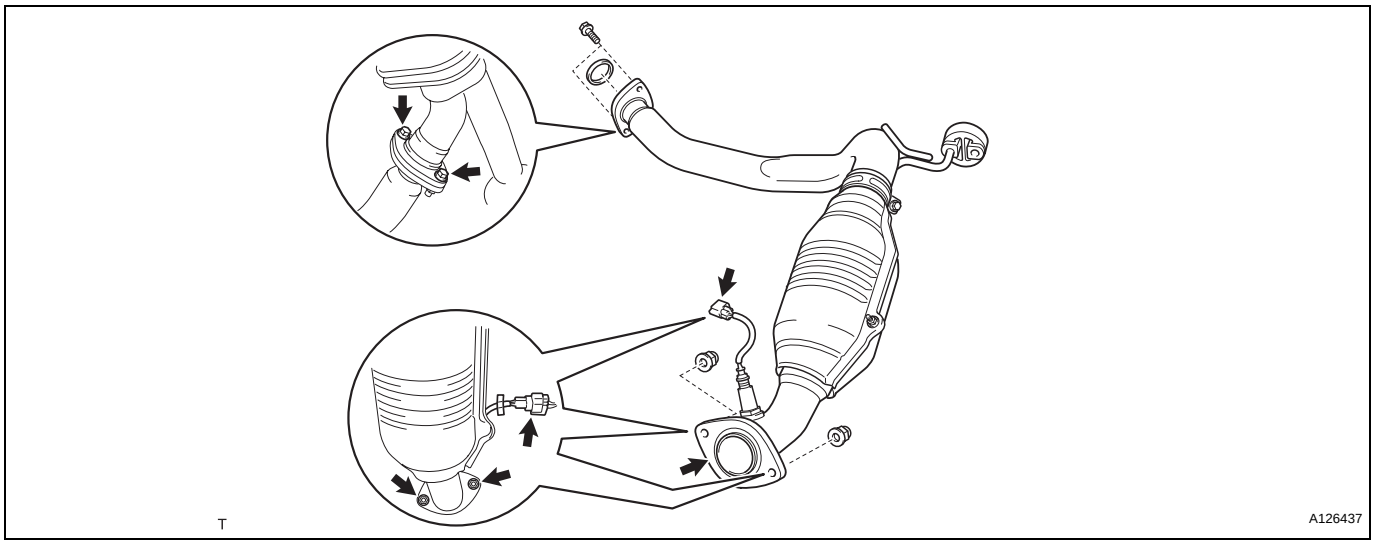

   (a) Disconnect the oxygen sensor connector.
   (b) Remove the 2 bolts and 2 nuts.
   (c) Disengage the support and remove the front exhaust pipe and 2 gaskets.

6. REMOVE FRONT EXHAUST PIPE ASSEMBLY

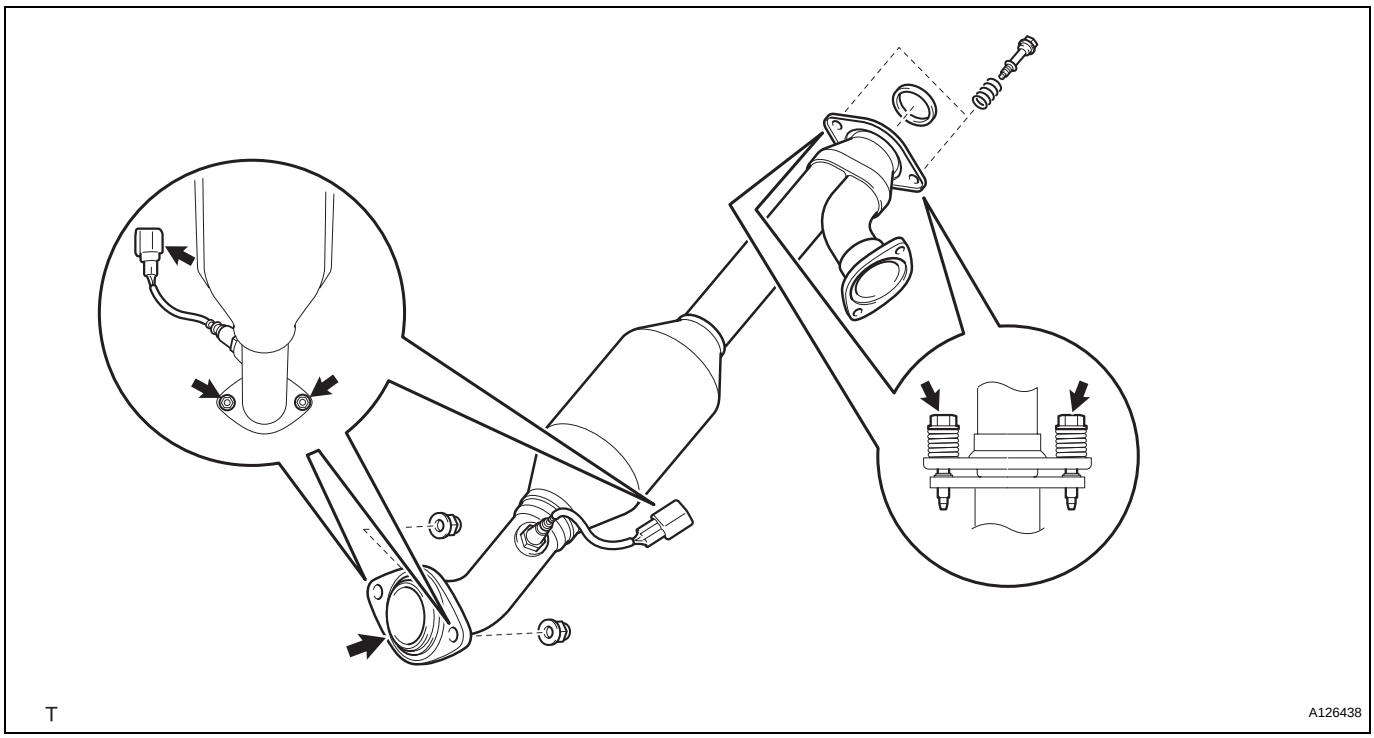

(a) Disconnect the oxygen sensor connector.
(b) Remove the 2 bolts, 2 springs and 2 nuts, then separate the front exhaust pipe from the exhaust manifold RH.

7. REMOVE MANIFOLD STAY

(a) Remove the 3 bolts and manifold stay.

8. REMOVE EXHAUST MANIFOLD SUB-ASSEMBLY RH

(a) Disconnect the air fuel ratio sensor connector.

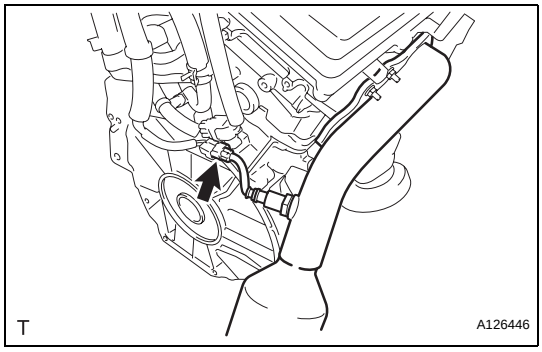

(b) Remove the 6 nuts and exhaust manifold.
(c) Remove the gasket.

9. REMOVE NO. 2 MANIFOLD STAY

(a) Remove the 3 bolts and the No. 2 manifold stay.

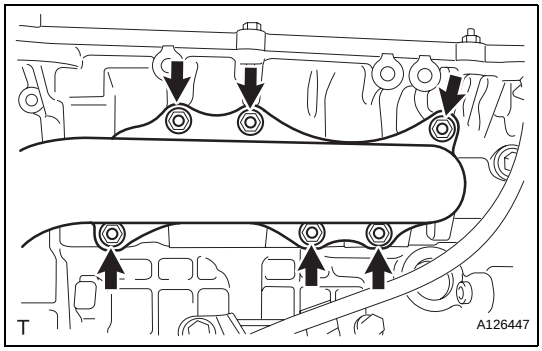

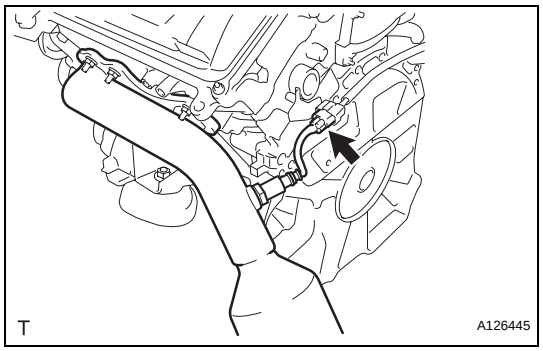

10. REMOVE EXHAUST MANIFOLD SUB-ASSEMBLY LH

(a) Disconnect the air fuel ratio sensor connector.

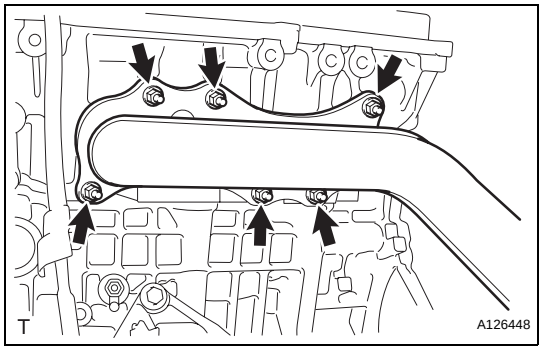

(b) Remove the 6 nuts and the exhaust manifold.

(c) Remove the gasket.

11. DISCONNECT NO. 1 FUEL PIPE SUB-ASSEMBLY (See page FU-13)

12. DISCONNECT NO. 2 FUEL PIPE SUB-ASSEMBLY (See page FU-14)

13. REMOVE INTAKE MANIFOLD

(a) Disconnect the 6 fuel injector connectors.

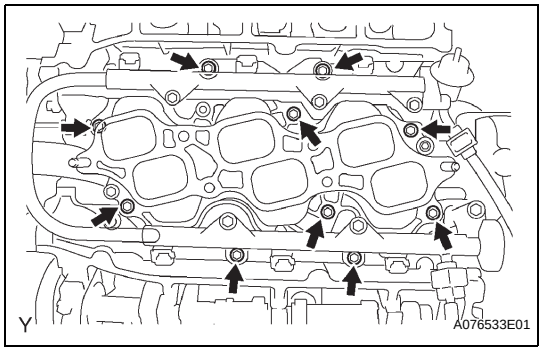

(b) Remove the 10 bolts, then remove the intake manifold and gasket.

14. REMOVE WATER BY-PASS JOINT RR

(a) Disconnect the engine coolant temperature sensor connector.

(b) Disconnect the heater hose.

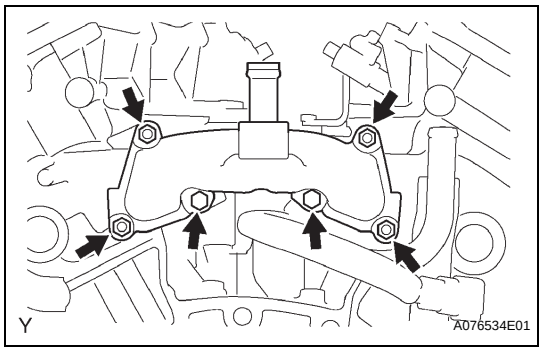

(c) Remove the 2 bolts and 4 nuts, then remove the water by-pass joint RR and 2 gaskets.

(d) Remove the O-ring from the water outlet hose.

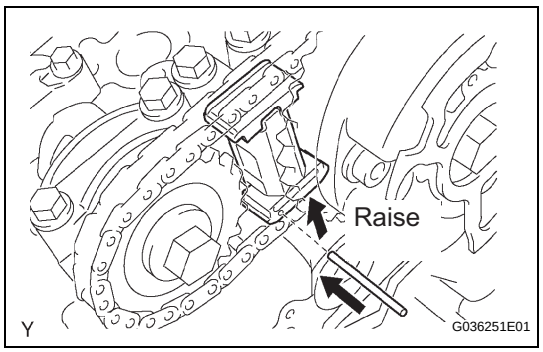

15. REMOVE CAMSHAFT TIMING GEARS AND NO. 2 CHAIN (for Bank 1)

(a) While raising the No. 2 chain tensioner, insert a pin of ϕ 1.0 mm (0.039 in.) into the hole to fix it.

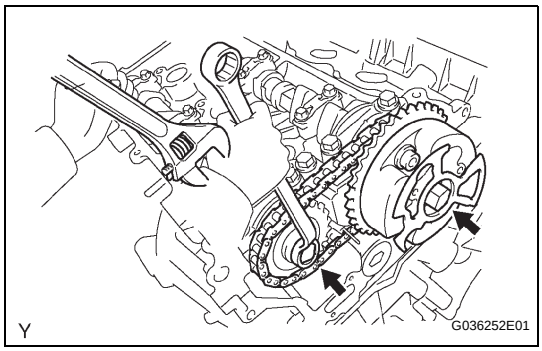

(b) Hold the hexagonal portion of the camshaft with a wrench.
NOTICE:
Be careful not to damage the cylinder head and valve lifter with the wrench.

(c) Remove the 2 bolts, then remove the camshaft timing gear, camshaft timing gear assembly and No. 2 timing chain.
NOTICE:
Do not disassemble the camshaft timing gear assembly.

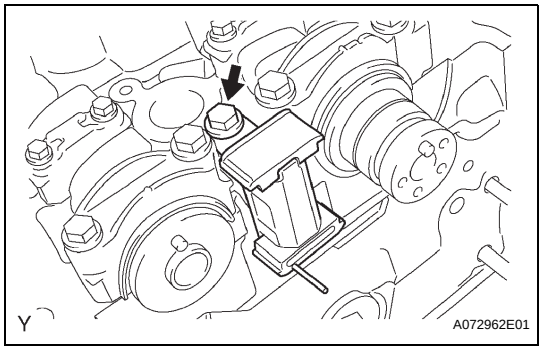

16. REMOVE NO. 2 CHAIN TENSIONER ASSEMBLY

(a) Remove the bolt, then remove the No. 2 chain tensioner.

17. REMOVE CAMSHAFTS (for Bank 1)
NOTICE:
Keep the camshaft level while it is being removed. The camshaft thrust clearance is very small and failing to keep it level could crack or damage the cylinder head journal surface, which receives the thrust force. This could subsequently lead the camshaft to seize or break. Perform the following steps to avoid such problems.

(a) Rotate the camshafts counterclockwise using a wrench so that the cam lobes of No. 1 cylinder face in the directions shown in the illustration.

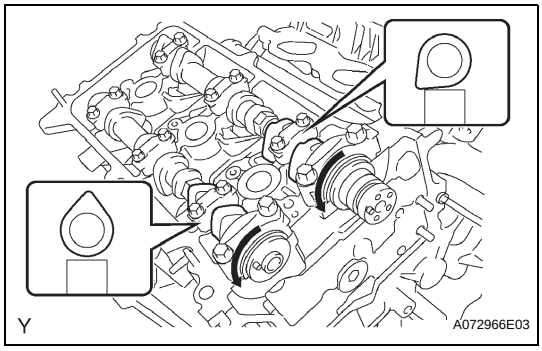

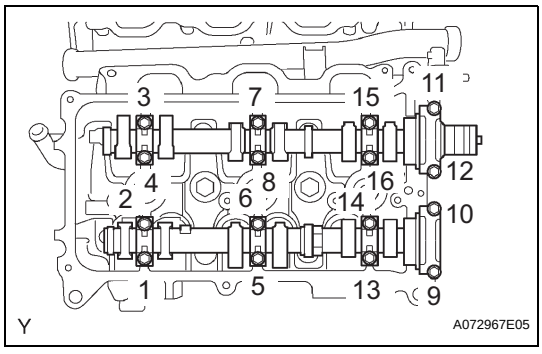

(b) Using several steps, loosen and remove the 16 bearing cap bolts uniformly in the sequence shown in the illustration.

(c) Remove the 8 bearing caps and 2 camshafts.

18. REMOVE NO. 2 CAMSHAFT BEARING

19. REMOVE CYLINDER HEAD SUB-ASSEMBLY

(a) Remove the bolt and separate the ground cable.

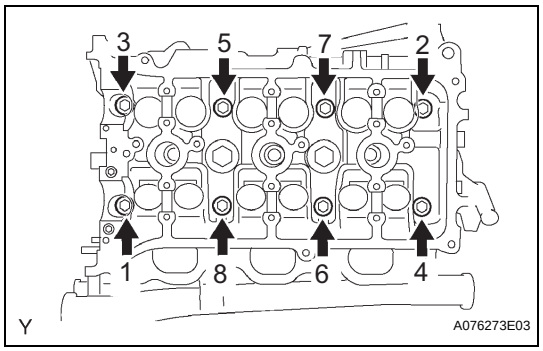

(b) Using several steps, loosen the 8 cylinder head bolts on the cylinder head uniformly with a 10 mm bi-hexagon wrench in the sequence shown in the illustration. Remove the 8 cylinder head bolts and 8 plate washers.

NOTICE:

- **Be careful not to drop the plate washers into the cylinder head.**
- **Cylinder head warpage or cracking could result from removing the bolts in the wrong order.**

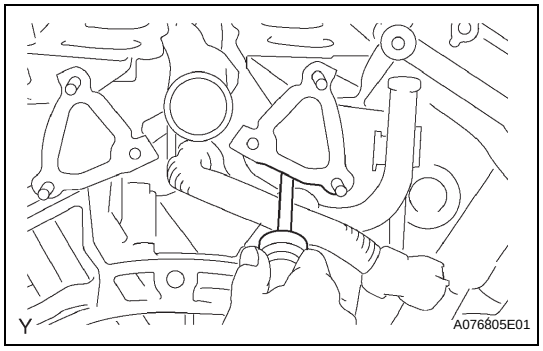

(c) Lift the cylinder head from the dowels on the cylinder block, and place the cylinder head on wooden blocks on a bench.

NOTICE:

Be careful not to drop the plate washers into the cylinder head.

If the cylinder head is difficult to lift off, pry between the cylinder head and cylinder block with a screwdriver.

20. REMOVE CYLINDER HEAD GASKET

21. REMOVE NO. 1 CHAIN VIBRATION DAMPER

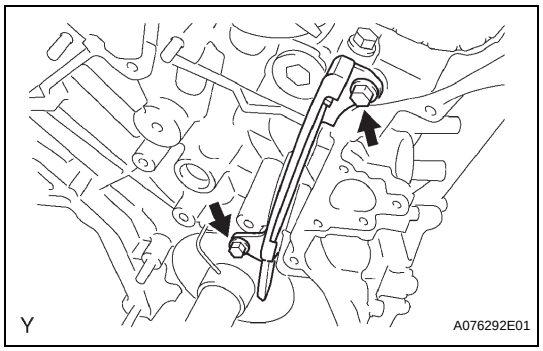

(a) Remove the 2 bolts, then remove the No. 1 chain vibration damper.

22. REMOVE CAMSHAFT TIMING GEARS AND NO. 2 CHAIN (for Bank 2)

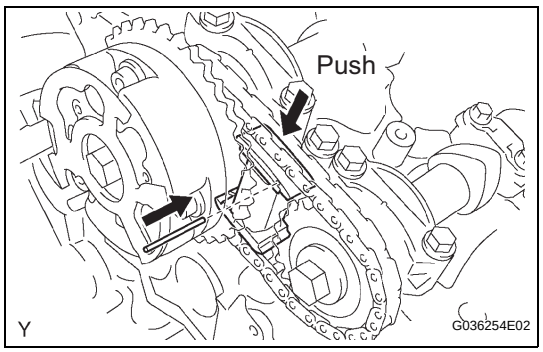

(a) While pushing down the No. 2 chain tensioner, insert a pin of ϕ 10 mm (0.039 in.) into the hole to fix it.

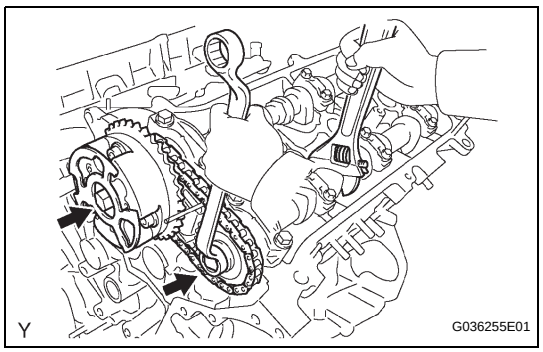

(b) Hold the hexagonal portion of the camshaft with a wrench.

NOTICE:

Be careful not to damage the cylinder head and valve lifter with the wrench.

(c) Remove the 2 bolts, then remove the camshaft timing gear, camshaft timing gear assembly and No. 2 timing chain.
NOTICE:
Do not disassemble the camshaft timing gear assembly.

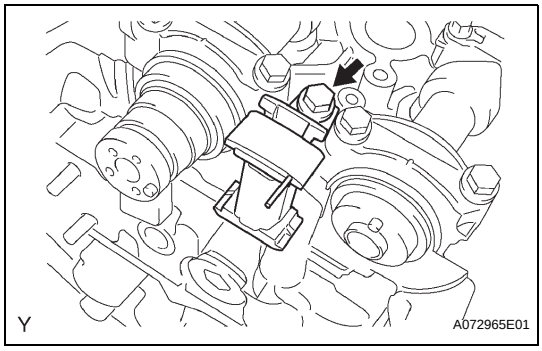

23. REMOVE NO. 3 CHAIN TENSIONER ASSEMBLY
(a) Remove the bolt, then remove the No. 3 chain tensioner.

24. REMOVE CAMSHAFTS (for Bank 2)
NOTICE:
Keep the camshaft level while it is being removed. The camshaft thrust clearance is very small and failing to keep it level could crack or damage the cylinder head journal surface, which receives the thrust force. This could subsequently lead the camshaft to seize or break. Perform the following steps to avoid such problems.

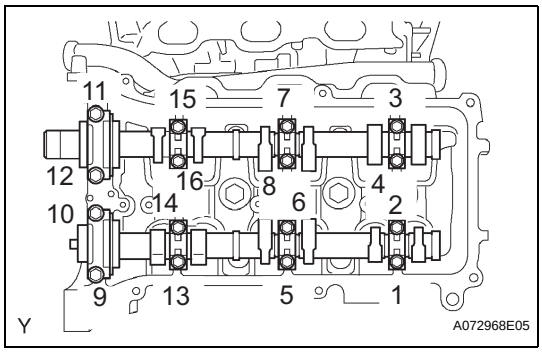

(a) Using several steps, loosen and remove the 16 bearing cap bolts uniformly in the sequence shown in the illustration.
(b) Remove the 8 bearing caps and 2 camshafts.

25. REMOVE CYLINDER HEAD LH
(a) Remove the bolt, then separate the ground cable.
(b) Remove the bolt, then separate the air fuel ratio connector bracket.

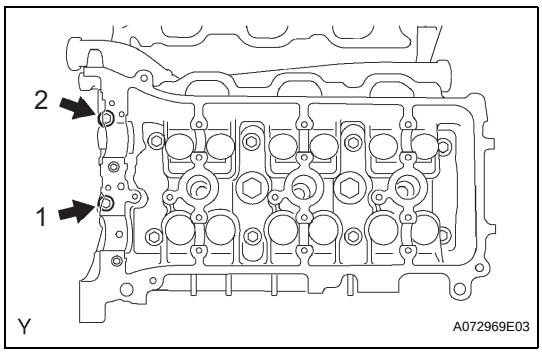

(c) Using several steps, remove the 2 cylinder head bolts from the cylinder head in the sequence shown in the illustration.

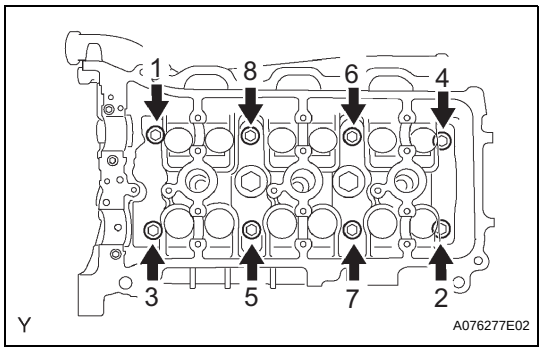

(d) Using several steps, uniformly loosen the 8 cylinder head bolts on the cylinder head with a 10 mm bi-hexagon wrench in the sequence shown in the illustration. Remove the 8 cylinder head bolts and 8 plate washers.
NOTICE:
- **Be careful not to drop the plate washers into the cylinder head.**
- **Cylinder head warpage or cracking could result form removing the bolts in the wrong order.**

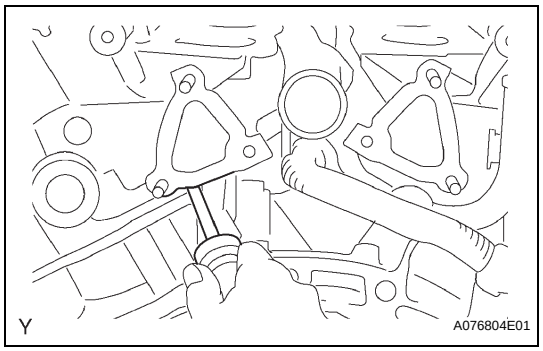

(e) Lift the cylinder head from the dowels on the cylinder block, and place the cylinder head on wooden blocks on a bench.
NOTICE:
Be careful not to drop the plate washers into the cylinder head.
If the cylinder head is difficult to remove, pry between the cylinder head and cylinder block with a screwdriver.

26. REMOVE NO. 2 CYLINDER HEAD GASKET

DISASSEMBLY

HINT:
- Thoroughly clean all parts to be assembled.
- Before installing the parts, apply new engine oil to all sliding and rotating surfaces.
- Replace all gaskets, O-rings and oil seals with new parts.

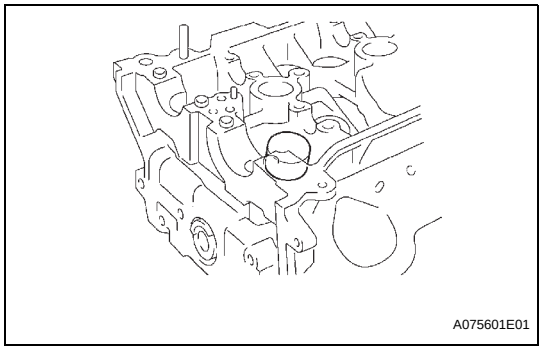

1. REMOVE VALVE LIFTER

HINT:
Arrange the valve lifter in the correct order.

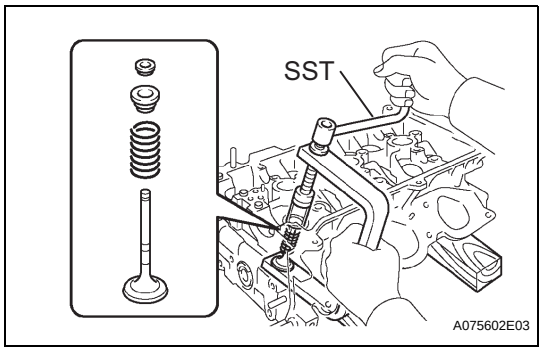

2. REMOVE VALVE

HINT:
Arrange the valves, inner compression springs, valve spring retainers and valve spring retainer locks in the correct order.

(a) Place the cylinder head on a wooden block.
(b) Using SST, compress the inner compression spring and remove the 2 valve spring retainer locks.
SST 09202-70020 (09202-00010)
(c) Remove the valve, inner compression spring and valve spring retainer.

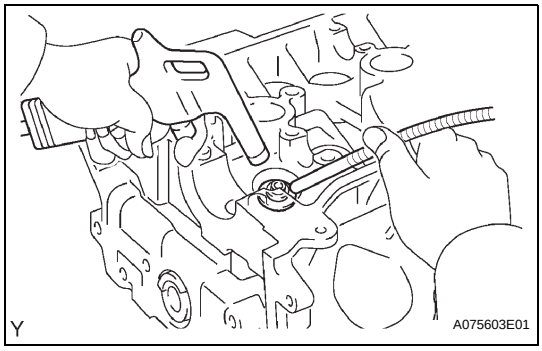

3. REMOVE VALVE SPRING SEAT

(a) Using compressed air and a magnetic finger, remove the valve spring seat by applying compressed air.

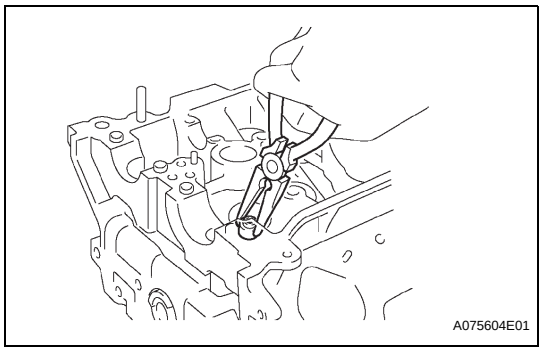

4. REMOVE VALVE STEM OIL O SEAL OR RING

(a) Using needle-nose pliers, remove the valve stem oil seal.

5. REMOVE STRAIGHT PIN NO.1

(a) Remove the 10 knock pins from bank 1 and bank 2 cylinder heads.

6. REMOVE EXHAUST MANIFOLD, RH STUD BOLT

(a) Remove the 20 stud bolts from bank 1 and bank 2 cylinder heads.

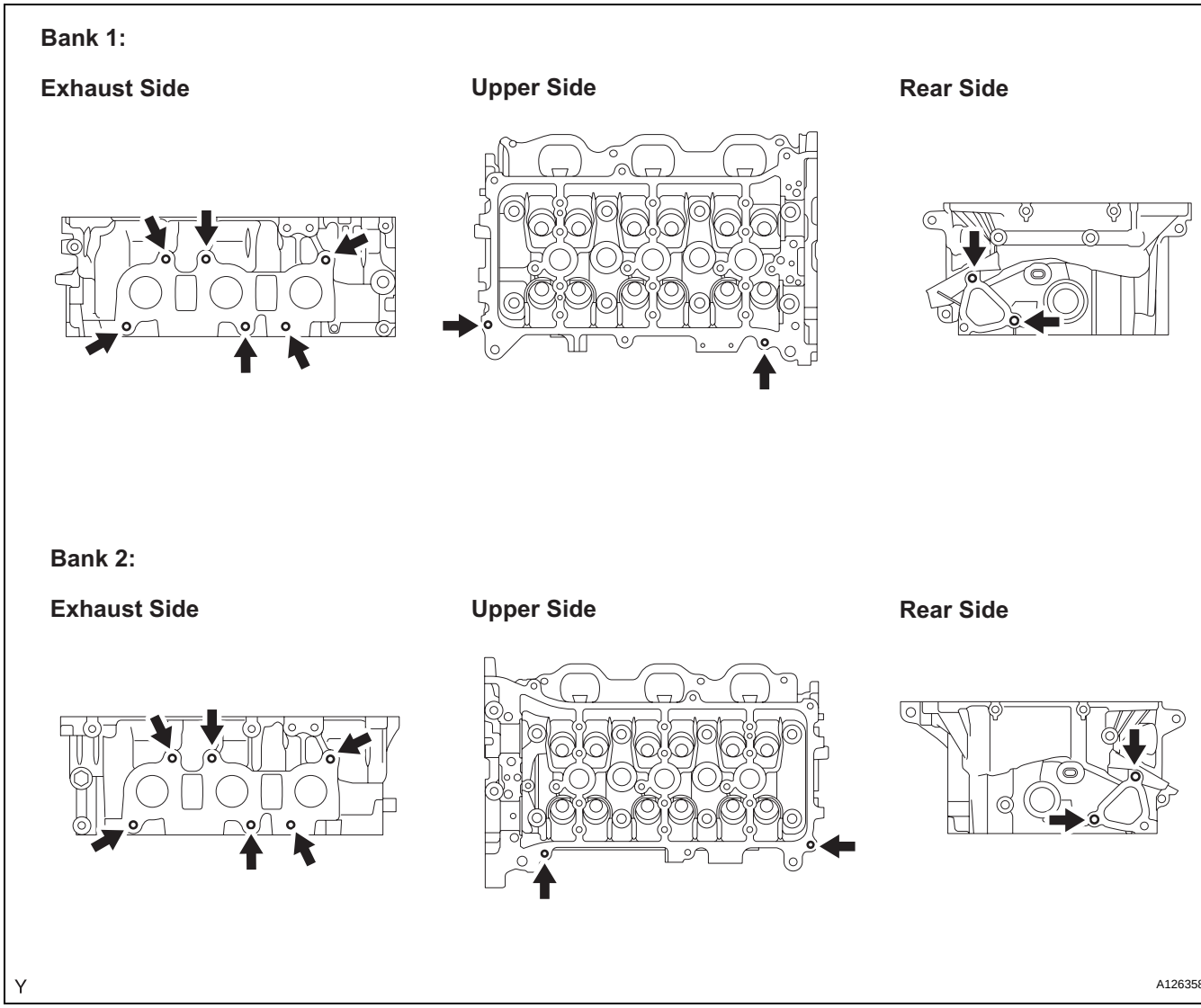

7. REMOVE UNION

(a) Remove the 2 unions from bank 1 and bank 2 cylinder heads.

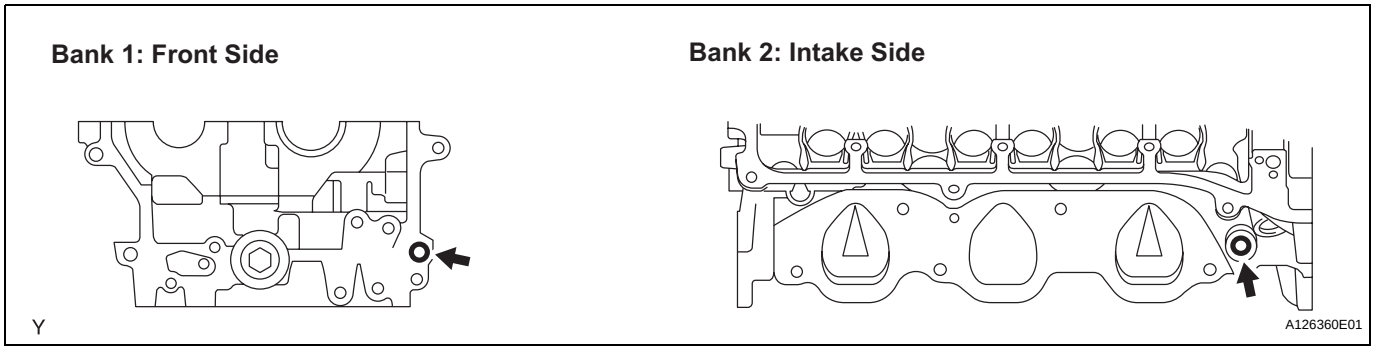

8. REMOVE TIGHT PLUG

(a) Remove the 2 tight plugs from bank 1 and bank 2 cylinder heads.

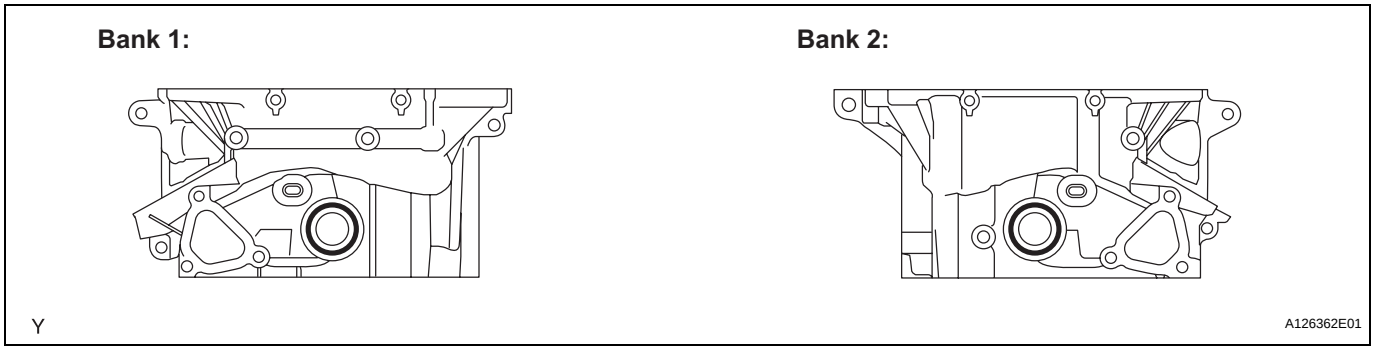

INSPECTION

1. INSPECT CYLINDER HEAD SET BOLT

(a) Using vernier calipers, measure the outer diameter of the cylinder head set bolt thread.

Standard outer diameter:
10.85 to 11.00 mm (0.4272 to 0.4331 in.)
Minimum outer diameter:
10.7 mm (0.421 in.)

If the outer diameter is less than the minimum, replace the cylinder head set bolt.

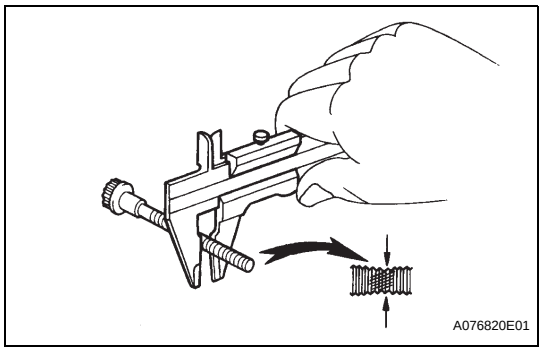

2. CLEAN CYLINDER HEAD SUB-ASSEMBLY

(a) Using a gasket scraper, remove all the gasket material from the cylinder block contact surface.

NOTICE:
Be careful not to scratch the cylinder block contact surface.

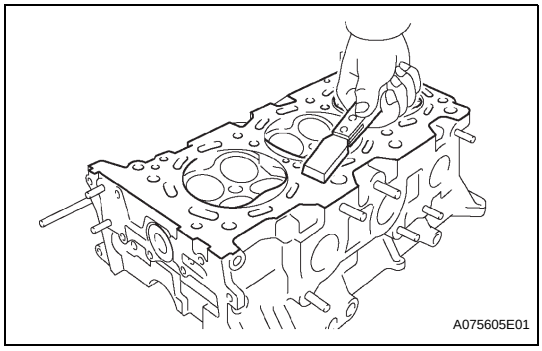

(b) Using a wire brush, remove all the carbon from the combustion chambers.

NOTICE:
Be careful not to scratch the combustion chambers.

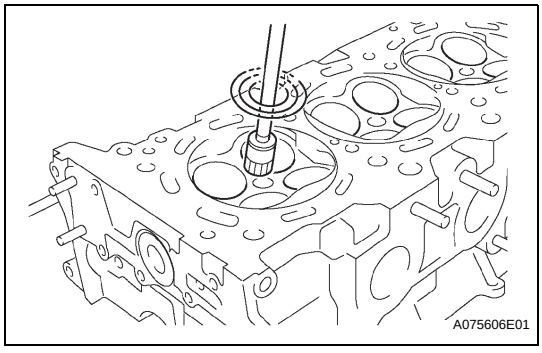

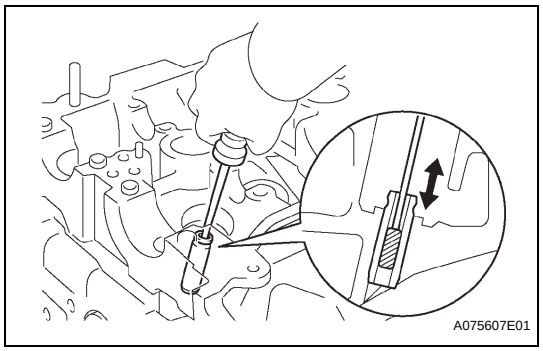

(c) Using a valve guide bushing brush and solvent, clean all the valve guide bushes.

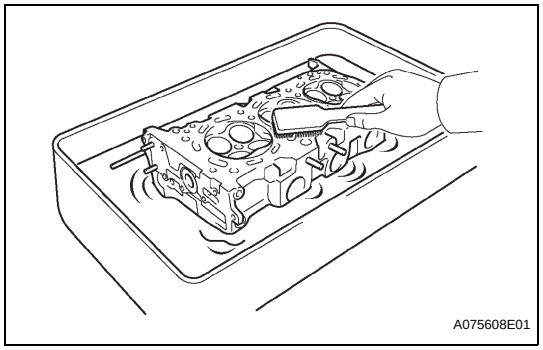

(d) Using a soft brush and solvent, thoroughly clean the cylinder head.

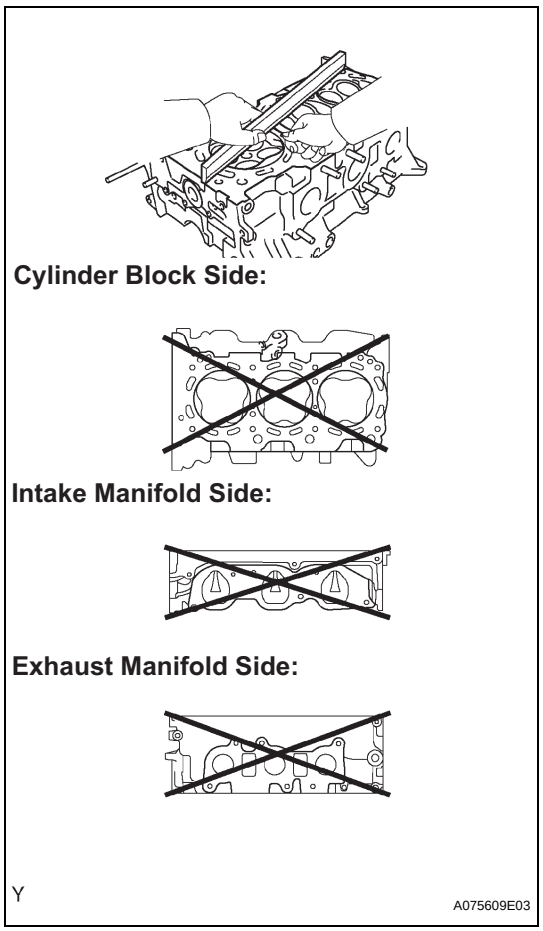

3. INSPECT CYLINDER HEAD SUB-ASSEMBLY

(a) Inspect the cylinder head for warpage.

(1) Using a precision straight edge and feeler gauge, measure the warpage on the cylinder block side and the intake and exhaust sides.

Maximum warpage:

0.10 mm (0.0039 in.)

If the warpage is greater than the maximum, replace the cylinder head.

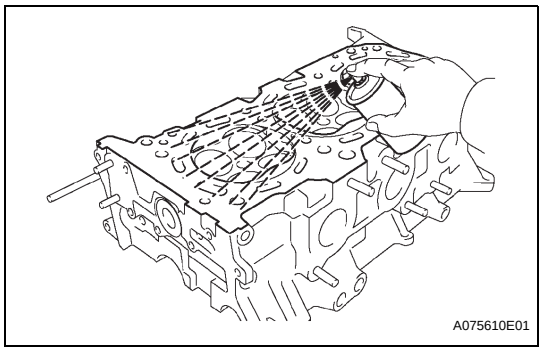
A075610E01

(b) Inspect the cylinder head for cracks.
(1) Using a dye penetrant, check the combustion chamber, intake ports, exhaust ports and cylinder block surface for cracks.
If cracked, replace the cylinder head.

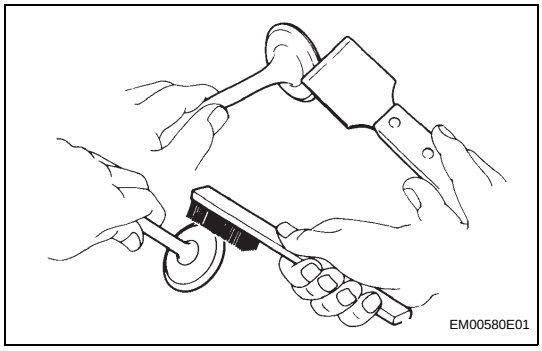
EM00580E01

4. CLEAN VALVE
(a) Using a gasket scraper, chip off any carbon from the valve head.
(b) Using a wire brush, thoroughly clean the valve.

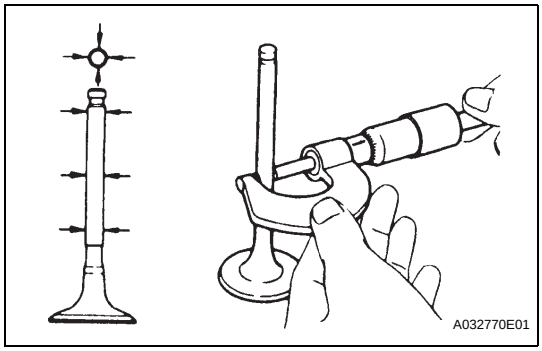
A032770E01

5. INSPECT VALVE
(a) Inspect the valve stem diameter.
(1) Using a micrometer, measure the diameter of the valve stem.
Valve stem diameter

Valve Stem	Specification
Intake	5.470 to 5.485 mm (0.2154 to 0.2159 in.)
Exhaust	5.465 to 5.480 mm (0.2152 to 0.2158 in.)

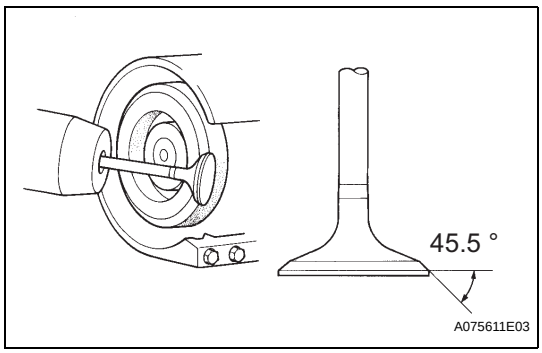

A075611E03

(b) Inspect the valve face angle.
(1) Grind the valve enough to remove any pits and carbon.
(2) Check that the valve is ground to the correct valve face angle.
Valve face angle:
45.5°

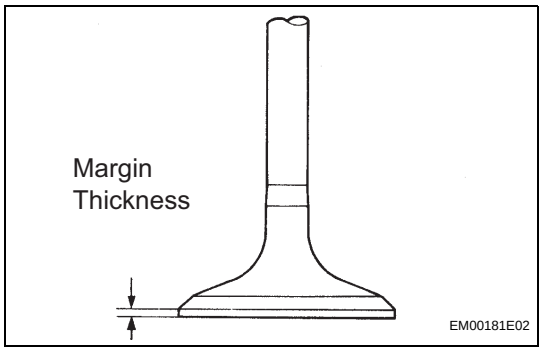

EM00181E02

(c) Inspect the valve head margin thickness.
(1) Using vernier calipers, check the valve head margin thickness.
Standard margin thickness:
1.0 mm (0.039 in.)
Minimum margin thickness:
0.5 mm (0.020 in.)
If the margin thickness is less than the minimum, replace the valve.

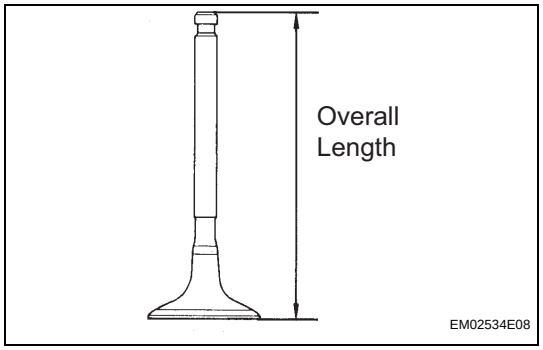

(d) Inspect the overall length.
(1) Using vernier calipers, check the overall length.
Standard overall length

Valve	Specification
Intake	106.95 mm (4.2106 in.)
Exhaust	105.80 mm (4.1654 in.)

Minimum overall length

Valve	Specification
Intake	106.70 mm (4.2008 in.)
Exhaust	105.55 mm (4.1555 in.)

If the overall length is less than the minimum, replace the valve.

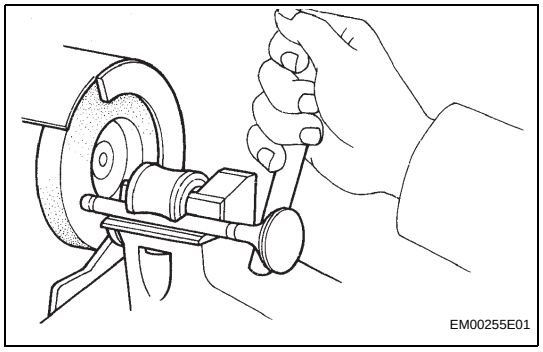

(e) Inspect the valve stem tip.
(1) Check the surface of the valve stem tip for wear.
NOTICE:
Do not grind to less than the minimum length.
If the valve stem tip is worn, resurface the tip with a grinder or replace the valve.

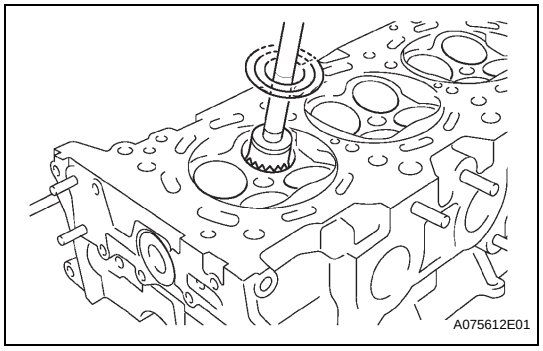

6. CLEAN VALVE SEAT
(a) Using a 45° carbide cutter, resurface the valve seats.
(b) Clean the valve seats.

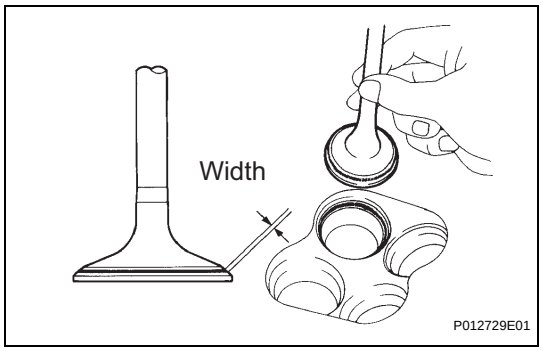

7. INSPECT VALVE SEAT
(a) Apply a light coat of prussian blue to the valve face.
(b) Lightly press the valve against the valve seat.
NOTICE:
Do not rotate the valve.
(c) Check the valve face and seat according to the following procedure.
(1) If blue appears 360° around the face, the valve is concentric.
If not, replace the valve.
(2) If the blue appears 360° around the valve seat, the guide and face are concentric.
If not, resurface the valve seat.
(3) Check that the seat is in contact with the middle of the valve face with the following width.
Standard width:
1.0 to 1.4 mm (0.039 to 0.055 in.)

EM

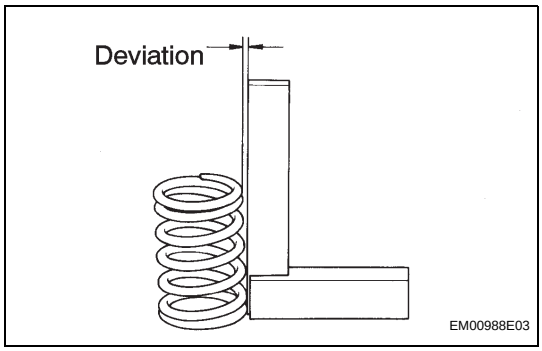

8. INSPECT INNER COMPRESSION SPRING

(a) Inspect the deviation.

(1) Using steel squares, measure the deviation of the inner compression spring.

Maximum deviation:

2.0 mm (0.079 in.)

If the deviation is greater than the maximum, replace the inner compression spring.

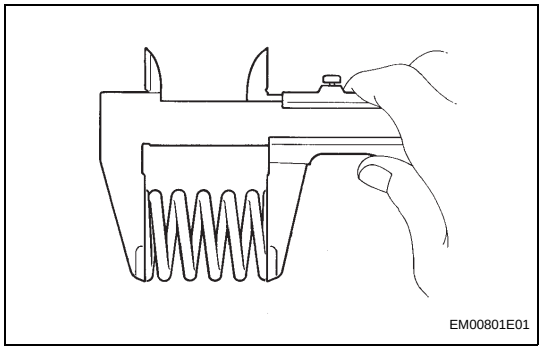

(b) Inspect the free length.

(1) Using vernier calipers, measure the free length of the inner compression spring.

Free length:

47.80 mm (1.8819 in.)

If the free length is not as specified, replace the inner compression spring.

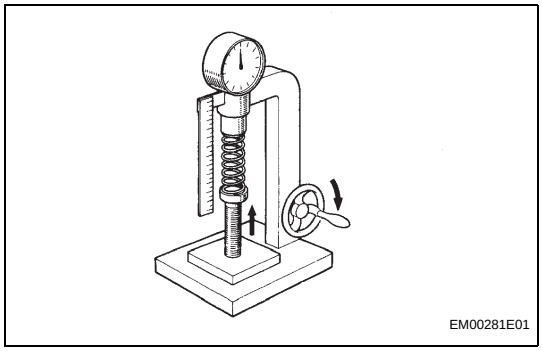

(c) Inspect the tension.

(1) Using a spring tester, measure the tension of the inner compression spring at the specified installed length.

Installed tension

Installed Length	Specification
33.3 mm (1.311 in.)	186.2 to 205.8 N (19.0 to 21.0 kgf, 41.9 to 46.3 lbf)

If the installed tension is not as specified, replace the inner compression spring.

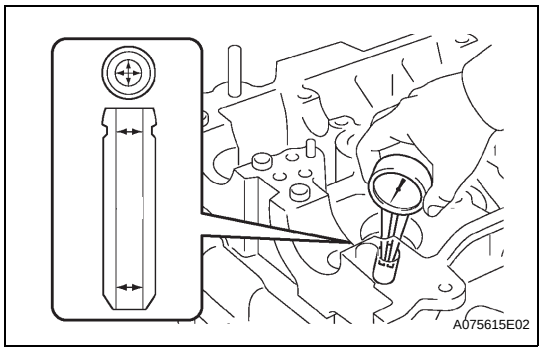

9. INSPECT VALVE GUIDE BUSH OIL CLEARANCE

(a) Using a caliper gauge, measure the internal diameter of the valve guide bush.

Inside diameter:

5.51 to 5.53 mm (0.2169 to 0.2177 in.)

(b) Subtract the valve stem diameter measurement from the valve guide bush internal diameter measurement.

Standard oil clearance

Valve Guide Bush	Specification
Intake	0.025 to 0.060 mm (0.0010 to 0.0024 in.)
Exhaust	0.030 to 0.065 mm (0.0012 to 0.0026 in.)

Maximum oil clearance

Valve Guide Bush	Specification
Intake	0.08 mm (0.0031 in.)
Exhaust	0.10 mm (0.0039 in..)

If the oil clearance is greater than the maximum, replace the valve and valve guide bush.

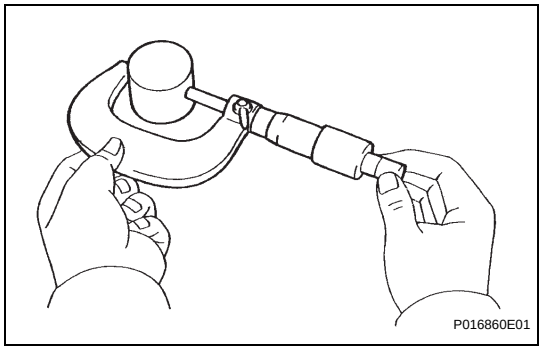

10. INSPECT VALVE LIFTER

(a) Using a micrometer, measure the valve lifter diameter.

Valve lifter diameter:
30.966 to 30.976 mm (1.2191 to 1.2195 in.)

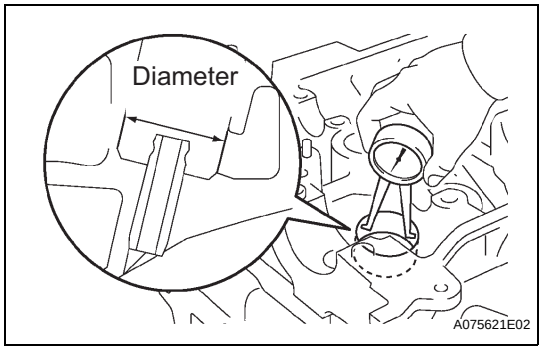

11. INSPECT VALVE LIFTER OIL CLEARANCE

(a) Using a caliper gauge, measure the lifter bore diameter of the cylinder head.

Lifter bore diameter:
31.009 to 31.025 mm (1.2208 to 1.2215 in.)

(b) Subtract the valve lifter diameter measurement (Step 16) from the lifter bore diameter measurement.

Standard oil clearance:
0.033 to 0.059 mm (0.0013 to 0.0023 in.)
Maximum oil clearance:
0.08 mm (0.0031 in.)

If the oil clearance is greater than the maximum, replace the valve lifter.

If necessary, replace the cylinder head.

EM

REPLACEMENT

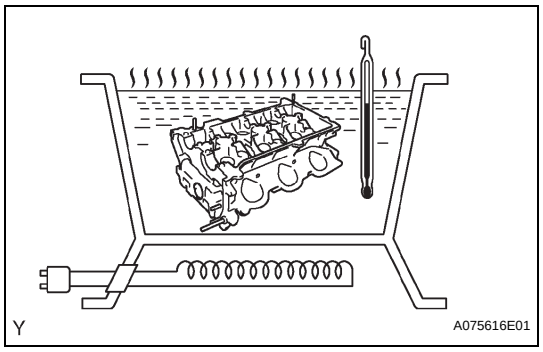

1. REMOVE VALVE GUIDE BUSH

(a) Gradually heat the cylinder head to 80 to 100°C (176 to 212°F).

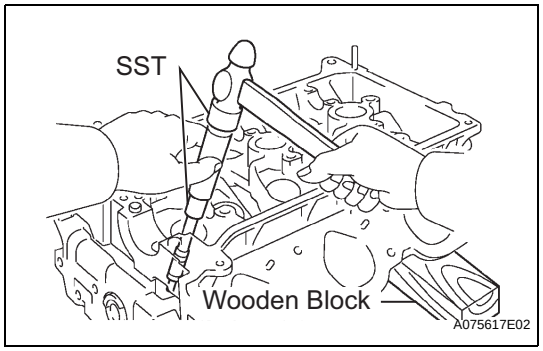

(b) Place the cylinder head on a wooden block.

(c) Using SST, tap out the valve guide bush.

SST 09201-10000, 09201-01055, 09950-70010 (09951-07100)

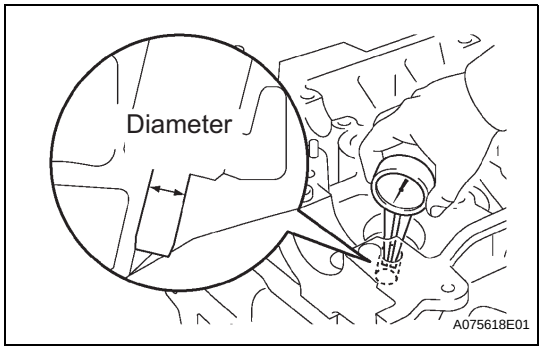

2. INSTALL VALVE GUIDE BUSH

(a) Using a caliper gauge, measure the bush bore diameter of the cylinder head.

Bush bore diameter:

10.295 to 10.315 mm (0.4053 to 0.4061 in.)

If the bush bore diameter of the cylinder head is greater than 10.315 mm (0.4061 in.), machine the bush bore to the dimension of 10.345 to 10.365 mm (0.4073 to 0.4081 in.).

Valve guide bush diameter

Item	mm (in.)
STD	10.333 to 10.344 (0.4068 to 0.4072)
O/S 0.05	10.383 to 10.394 (0.4088 to 0.4092)

EM

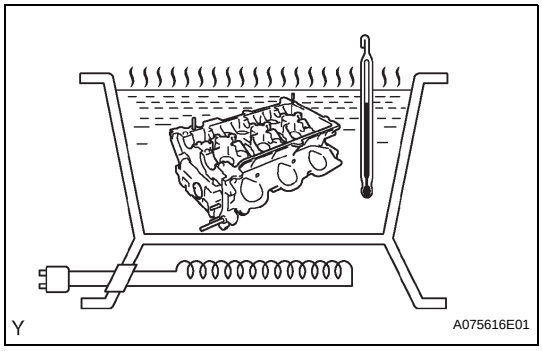

(b) Gradually heat the cylinder head to 80 to 100°C (176 to 212°F).

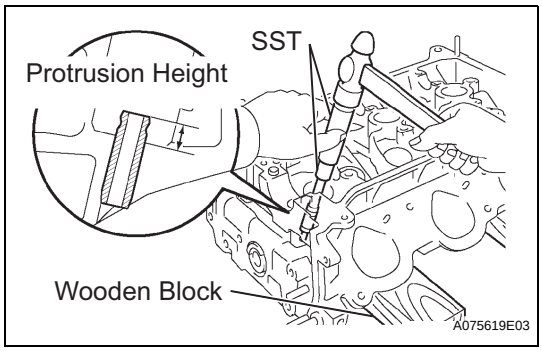

(c) Place the cylinder head on a wooden block.

(d) Using SST, tap in a new valve guide bush to the specified protrusion height.

SST 09201-10000, 09201-01055, 09950-70010 (09951-07100)

Protrusion height:

9.3 to 9.7 mm (0.366 to 0.382 in.)

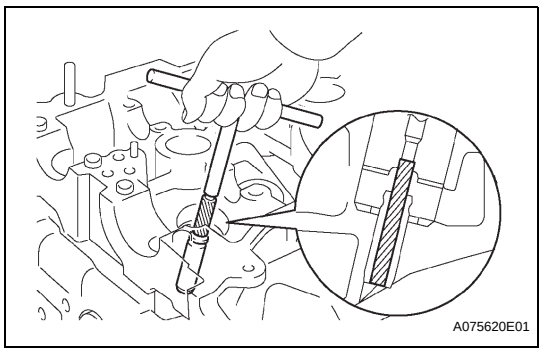

(e) Using a sharp 5.5 mm reamer, ream the valve guide bush to the standard specified clearance between the valve guide bush and valve stem.

Standard oil clearance:

Value guide	Specification
Intake	0.025 to 0.060 mm (0.0010 to 0.0024 in.)
Exhaust	0.030 to 0.065 mm (0.0012 to 0.0026 in.)

REASSEMBLY

1. INSTALL RING PIN

(a) Using a plastic-faced hammer, tap in new ring pins to the specified protrusion height.

Specified protrusion height:

2.7 to 3.3 mm (0.106 to 0.130 in.)

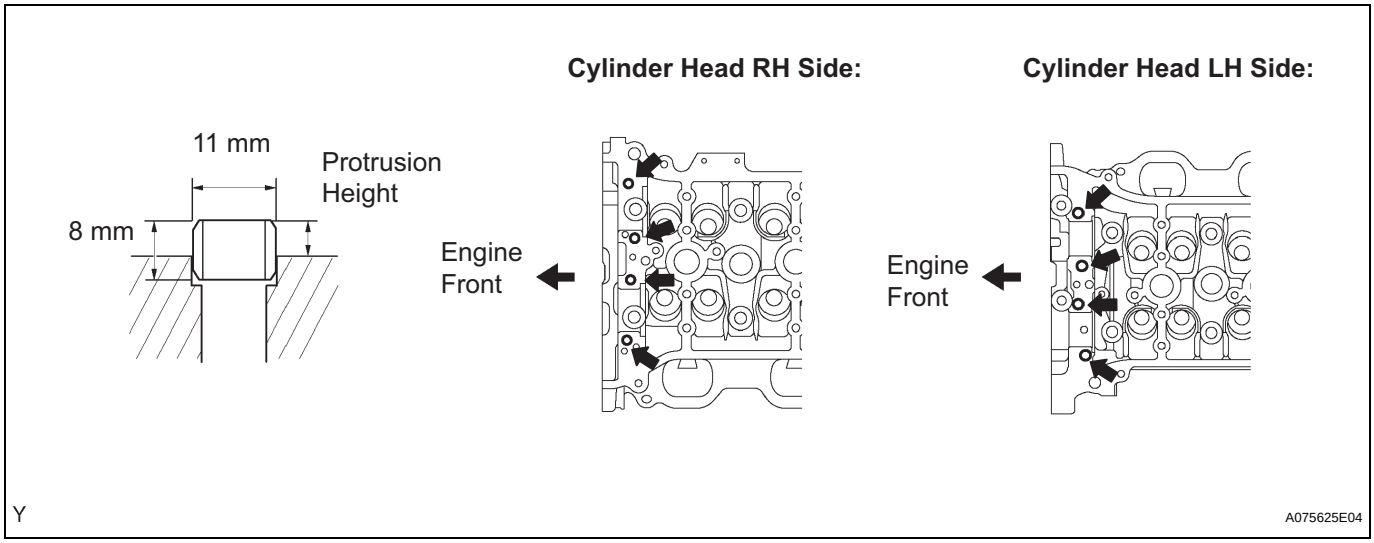

2. INSTALL STRAIGHT PIN

(a) Using a plastic-faced hammer, tap in new straight pins to the specified protrusion height.

Specified protrusion height

Pin	Specification
A	17.5 to 19.5 mm (0.689 to 0.768 in.)
B	7.5 to 8.5 mm (0.295 to 0.335 in.)
C	7.0 to 9.0 mm (0.276 to 0.354 in.)

Cylinder Head RH Side:

Front Side:

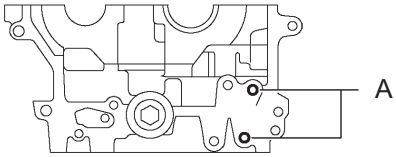

Upper Side:

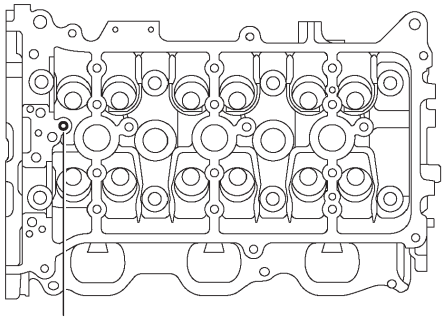

Intake Manifold Side:

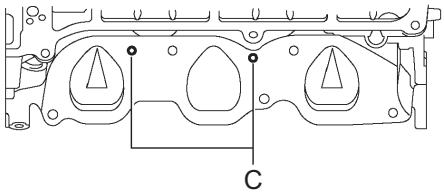

Cylinder Head LH Side:

Upper Side:

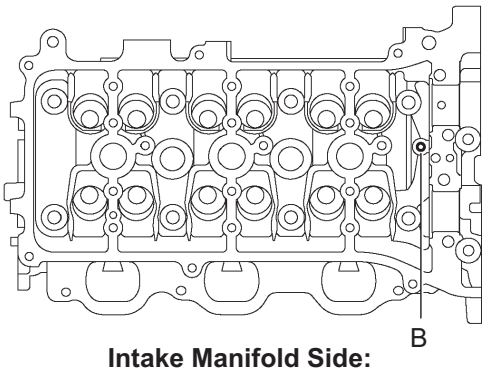

Intake Manifold Side:

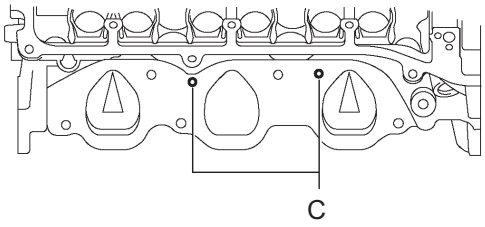

Front Side:

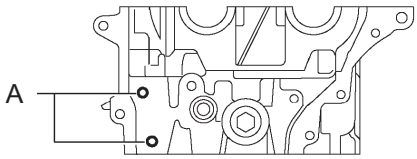

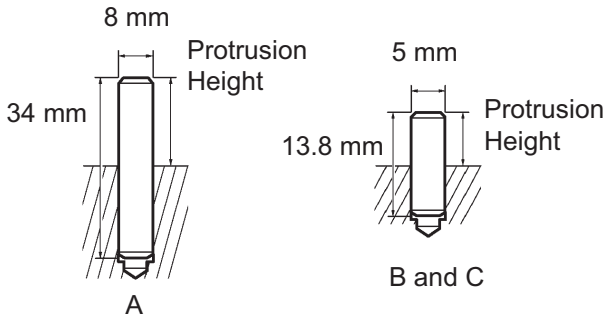

Y

A075627E04

3. INSTALL STUD BOLT

(a) Using "Torx" socket wrench E5 and E7, install the stud bolts.

Torque: Stud bolt A
4.0 N*m (41 kgf*cm, 35 in.*lbf)
Stud bolt B
9.0 N*m (92 kgf*cm, 80 in.*lbf)
Stud bolt C
4.0 N*m (41 kgf*cm, 35 in.*lbf)

Bank 1:

Exhaust Side **Upper Side** **Rear Side**

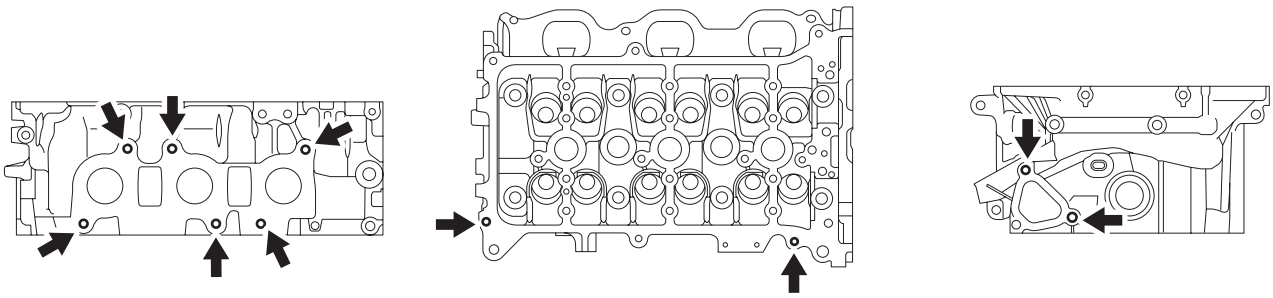

Bank 2:

Exhaust Side **Upper Side** **Rear Side**

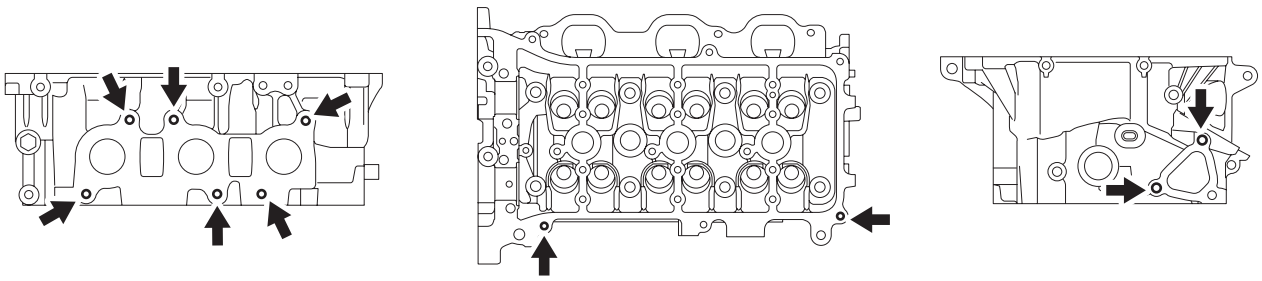

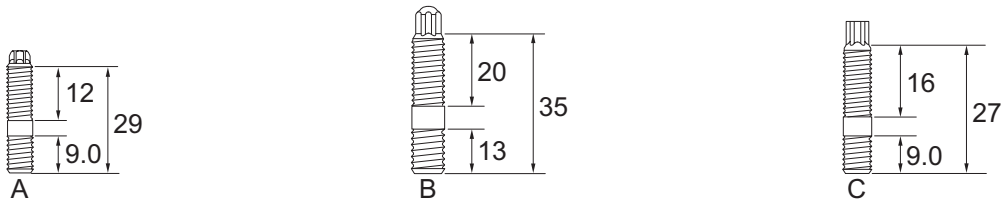

Y

A126359E01

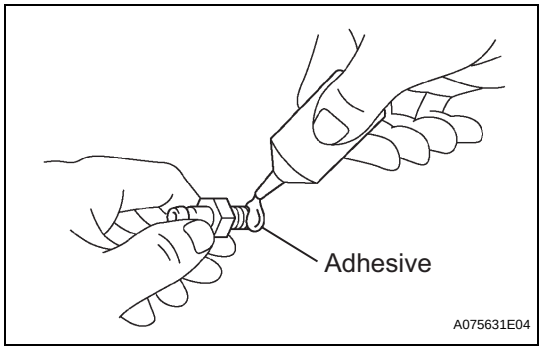

4. INSTALL UNION

(a) Apply adhesive to 2 or 3 threads of the bolt end.
Adhesive:
Toyota Genuine Adhesive 1324, Three Bond 1324 or the equivalent

(b) Using a deep socket wrench 12, install the unions.
Torque: 15 N*m (150 kgf*cm, 11 ft.*lbf)

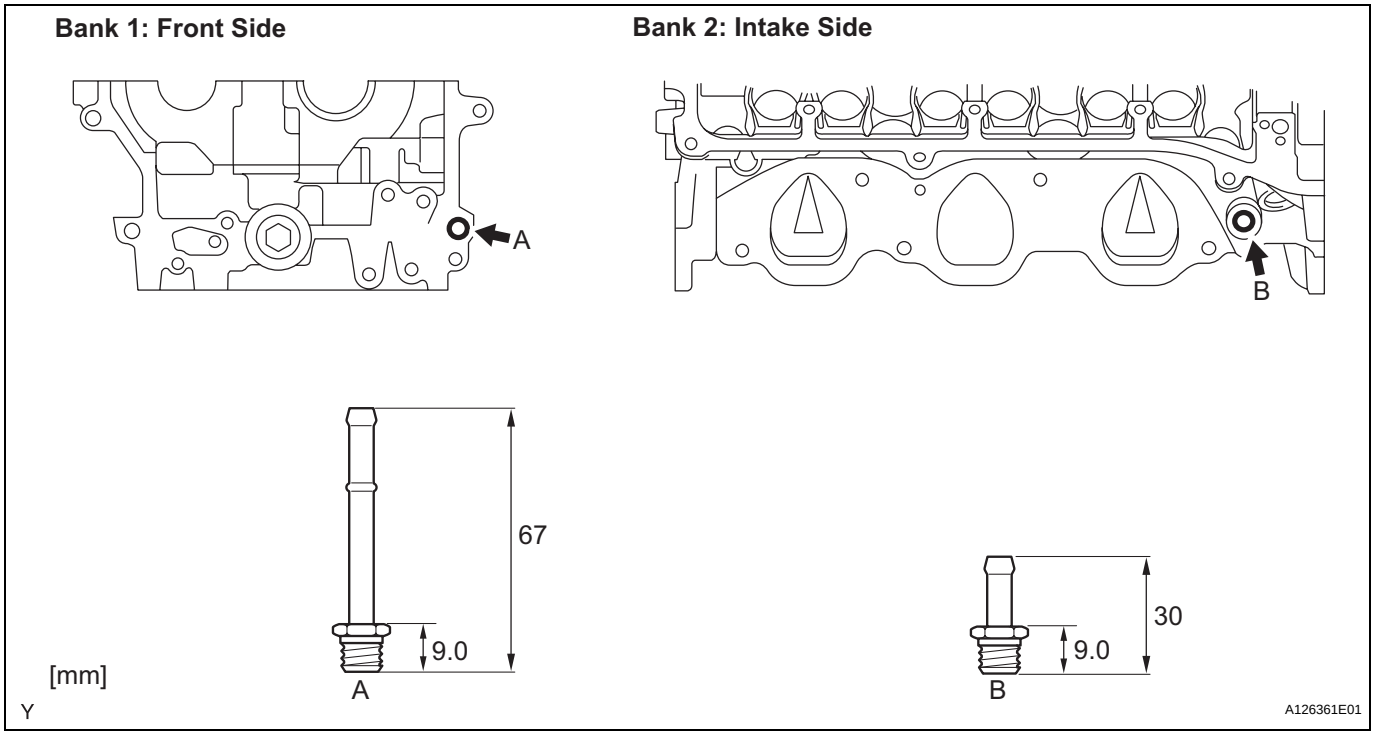

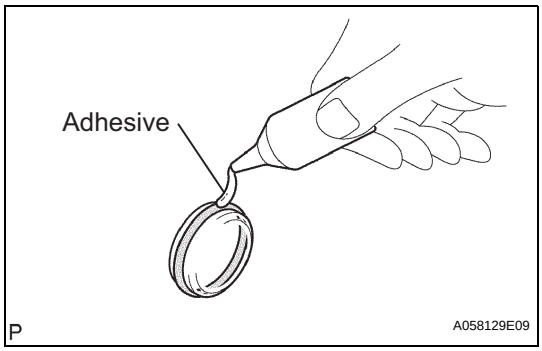

5. INSTALL TIGHT PLUG

(a) Apply adhesive around the new tight plugs.

(b) Using SST, tap in the tight plugs to the specified depth.

SST 09950-60010 (09951-00250), 09950-70010 (09951-07150)

Specified depth:

1.5 mm (0.059 in.)

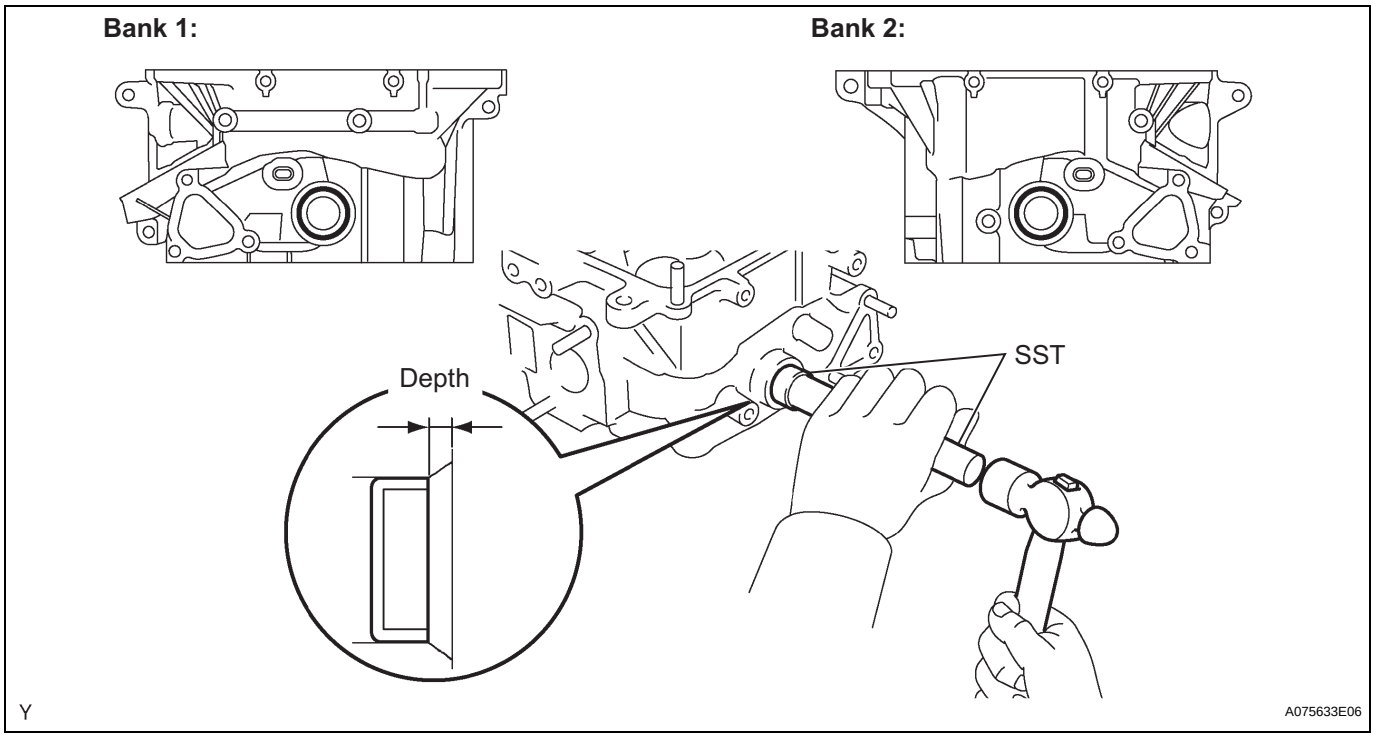

6. INSTALL WITH HEAD STRAIGHT SCREW PLUG

(a) Using a straight hexagon wrench 14, install a new gasket and straight screw plug.
Torque: 80 N*m (816 kgf*cm, 59 ft.*lbf)

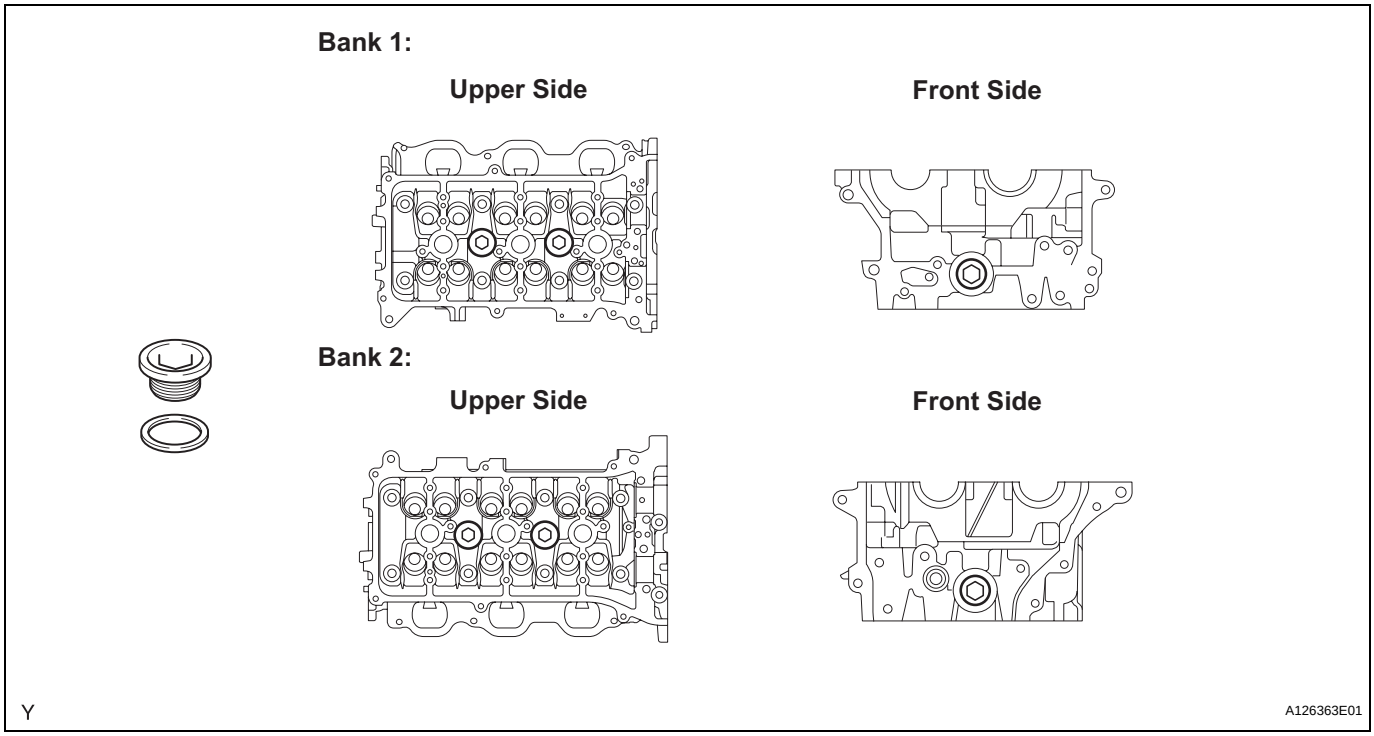

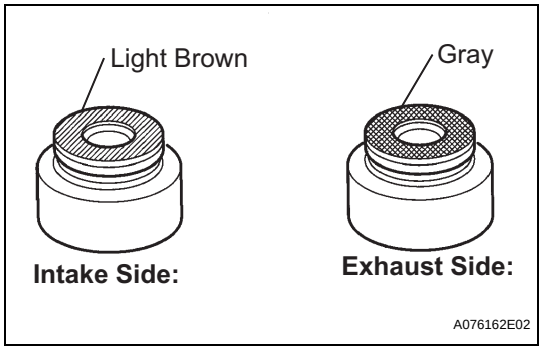

7. INSTALL VALVE STEM OIL SEAL OR RING

HINT:
The intake valve stem oil seal is light brown and the exhaust valve stem oil seal is gray.

(a) Apply a light coat of engine oil to the valve guide bush.

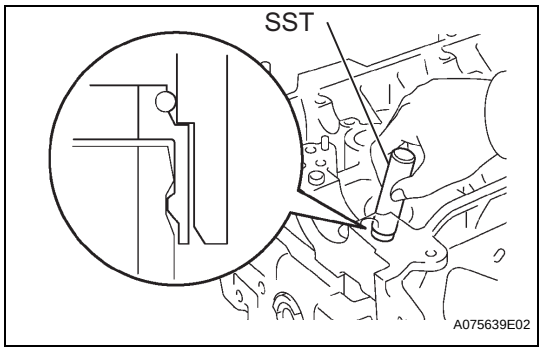

(b) Using SST, push in a new valve stem oil seal.
SST 09201-41020

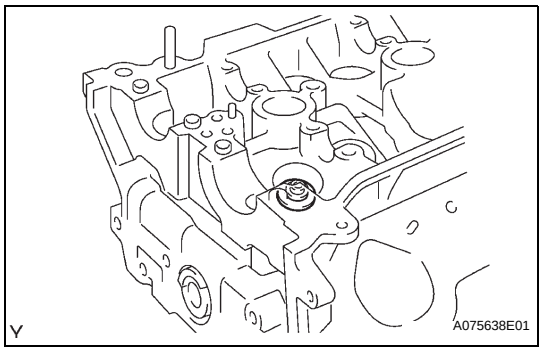

8. INSTALL VALVE SPRING SEAT

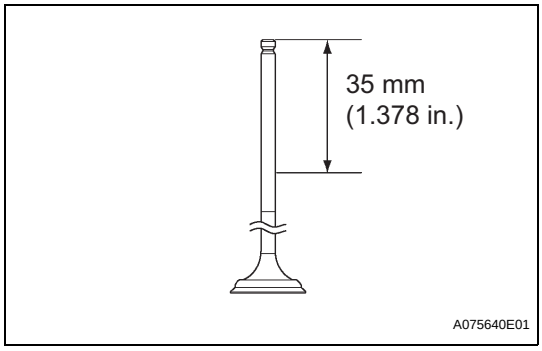

9. INSTALL VALVE

(a) Apply engine oil to the valve as shown in the illustration.

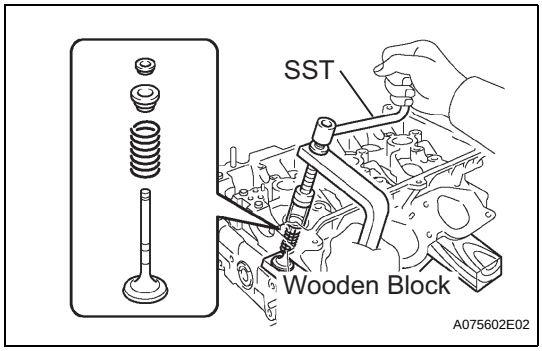

(b) Place the cylinder head on a wooden block.
(c) Install the valve, inner compression spring and valve spring retainer.
(d) Using SST, compress the inner compression spring and place the 2 valve spring retainer locks around the valve stem.
SST 09202-70020 (09202-00010)

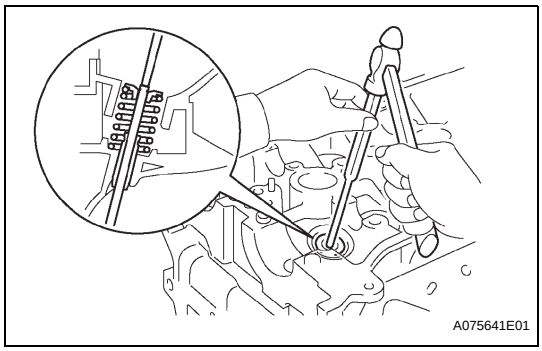

(e) Using a pin punch 5, lightly tap the valve stem tip to ensure a proper fit.
NOTICE:
Be careful not to damage the valve stem tip.

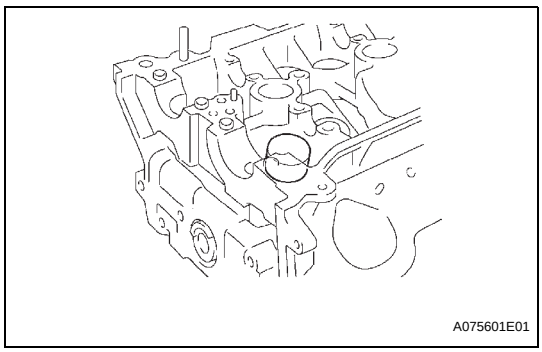

10. INSTALL VALVE LIFTER

(a) Apply engine oil to the valve stem end and valve lifter, and install the valve lifter onto the valve stem.
(b) Check that the valve lifter rotates smoothly by hand.

INSTALLATION

1. INSTALL NO. 2 CYLINDER HEAD GASKET

(a) Remove any old packing (FIPG) material.
HINT:
Do not drop any oil on the contact surface of the cylinder head and cylinder block.

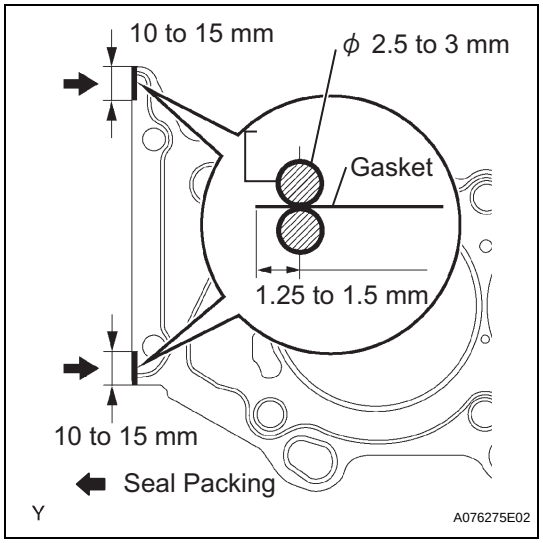

(b) Apply a continuous bead of seal packing (diameter 2.5 to 3.0 mm (0.098 to 0.118 in.)) to a new cylinder head gasket as shown in the illustration.
Seal packing:
Toyota Genuine Seal Packing Black, Three Bond 1207B or the equivalent
NOTICE:
Install the cylinder head within 3 minutes of applying the seal packing. Tighten the cylinder head bolts within 15 minutes of installing the cylinder head. Otherwise, the seal packing must be removed and reapplied.

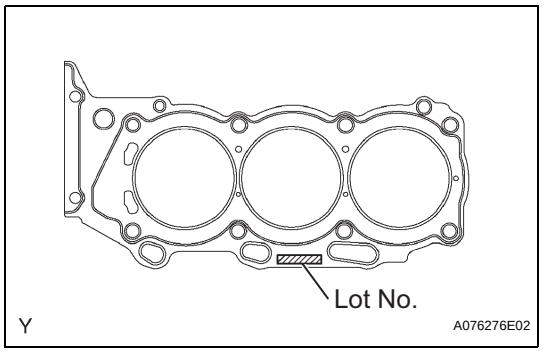

(c) Place the cylinder head gasket on the cylinder block surface with the Lot No. stamp facing upward.
NOTICE:
- **Orient the cylinder head gasket correctly.**
- **Place the cylinder head carefully in order not to damage the gasket with the bottom part of the head.**

2. INSTALL CYLINDER HEAD LH

(a) Place the cylinder head on the cylinder head gasket.
(b) Install the 8 cylinder head bolts.
HINT:
- The cylinder head bolts are tightened in 2 successive steps (steps (*1) and (*2)).
- If any cylinder head bolts are broken or deformed, replace them.

(1) Apply a light coat of engine oil to the threads of the cylinder head bolts.
(2) Install the plate washer onto the cylinder head bolt.

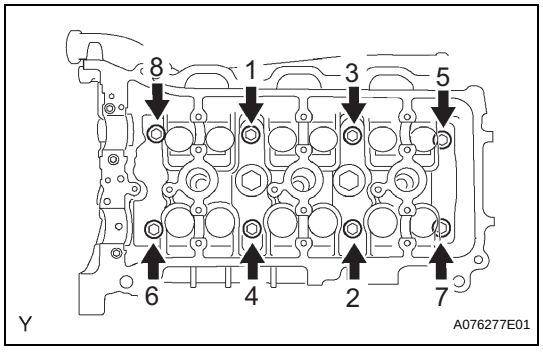

(3) Using several steps, uniformly tighten each bolt with a 10 mm bi-hexagon wrench in the sequence shown in the illustration. (*1)
Torque: 36 N*m (367 kgf*cm, 27 ft.*lbf)
If any cylinder head bolts do not meet the torque specification, replace them.
NOTICE:
Do not drop the washers into the cylinder head.

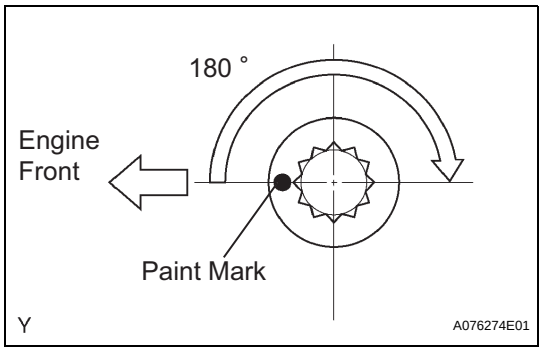

(4) Mark the front side of each cylinder head bolt with paint.
(5) Retighten the cylinder head bolts 180° as shown. (*2)
(6) Check that the painted marks are now at 180° from the engine front.

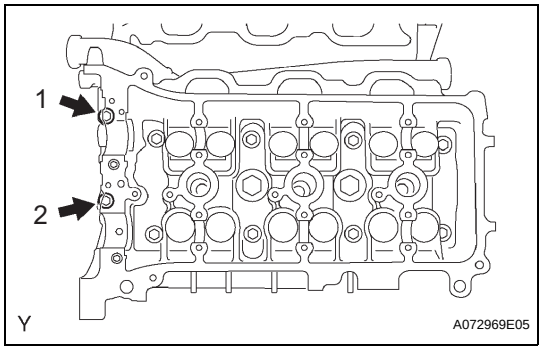

(c) Install the 2 cylinder head bolts.
(1) Apply a light coat of engine oil to the threads of the cylinder head bolts.
(2) Using several steps, uniformly install and tighten the 2 cylinder head bolts in the sequence shown in the illustration.
Torque: 30 N*m (306 kgf*cm, 22 ft.*lbf)
(d) Install the ground cable with the bolt.
Torque: 8.0 N*m (82 kgf*cm, 71 ft.*lbf)
(e) Install the air fuel ratio sensor connector bracket with bolt.
Torque: 19 N*m (189 kgf*cm, 14 ft.*lbf)

3. INSTALL CAMSHAFTS (for Bank 2)
NOTICE:
Keep the camshaft level while it is being removed. The camshaft thrust clearance is very small and failing to keep it level could crack or damage the cylinder head journal surface, which receives the thrust force. This could subsequently lead the camshaft to seize or break. Perform the following steps to avoid such problems.

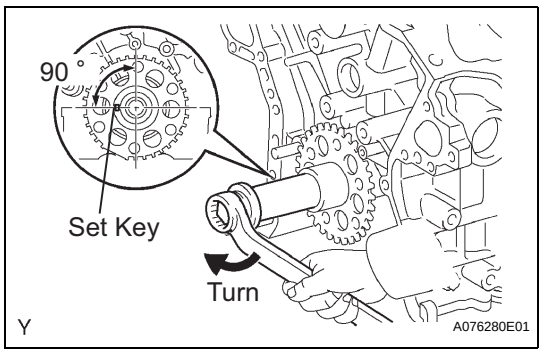

(a) Set the crankshaft position.
(1) Using the crankshaft pulley set bolt, turn the crankshaft, and set the crankshaft set key in the left horizontal position.
NOTICE:
Installing the crankshaft at the wrong angle could cause the piston head and valve head to come into contact with each other when installing the camshaft. This could cause damage, so always set the crankshaft at the correct angle.
(b) Apply new engine oil to the thrust portion and journal of the camshafts.

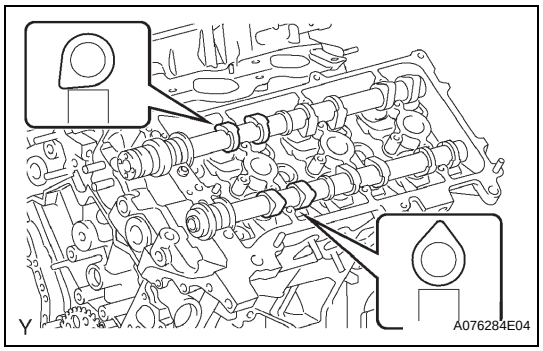

(c) Place the 2 camshafts onto the cylinder head with the cam lobes of No. 1 cylinder facing in the directions shown in the illustration.

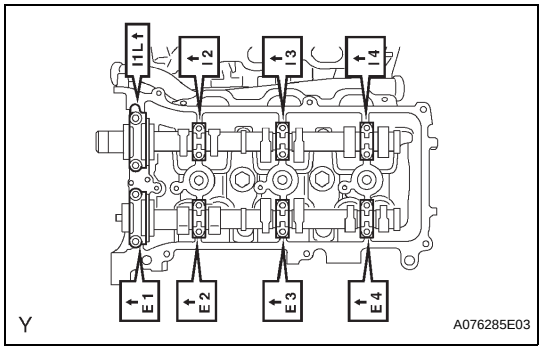

(d) Install the 8 bearing caps in the proper locations as shown.

(e) Apply a light coat of engine oil to the threads and under the leads of the bearing cap bolts.

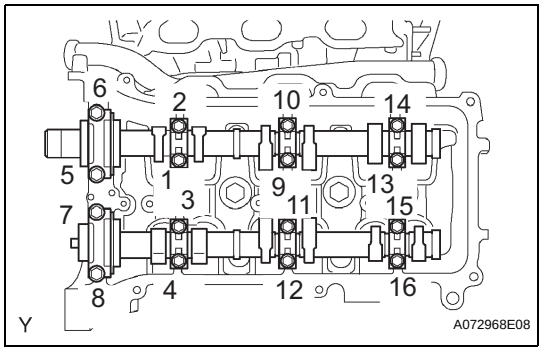

(f) Using several steps, uniformly install and tighten the 16 bearing cap bolts in the sequence shown in the illustration.

Torque: 10 mm (0.39 in.) head
9.0 N*m (92 kgf*cm, 80 in.*lbf)
12 mm (0.47 in.) head
24 N*m (245 kgf*cm, 18 ft.*lbf)

4. INSTALL NO. 3 CHAIN TENSIONER ASSEMBLY

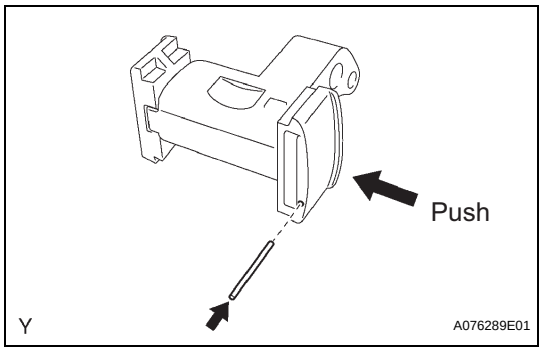

(a) While pushing in the tensioner, insert a pin of ϕ 1.0 mm (0.039 in.) into the hole to fix it.

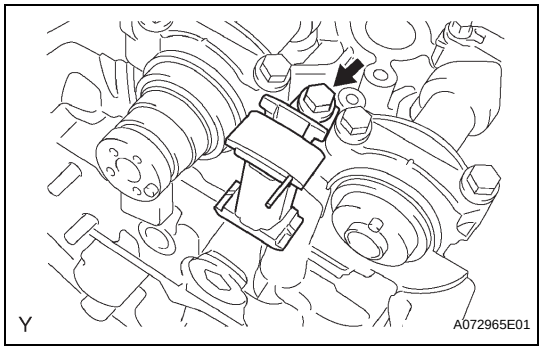

(b) Install the No. 2 chain tensioner with the bolt.
Torque: 19 N*m (194 kgf*cm, 14 ft.*lbf)

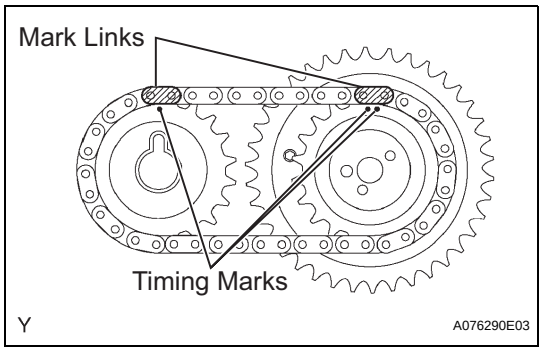

5. INSTALL CAMSHAFT TIMING GEARS AND NO. 2 CHAIN (for Bank 2)

(a) Align the yellow mark links with the timing marks (1 dot mark and 2 dot marks) of the camshaft timing gears as shown in the illustration.

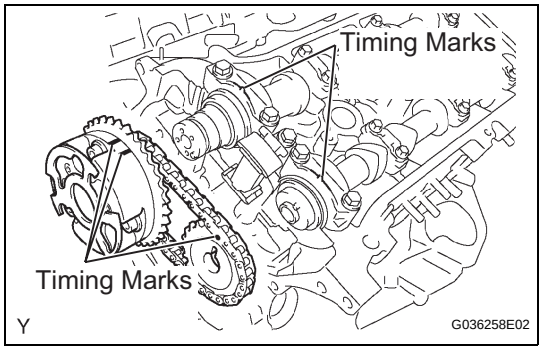

(b) Align the timing marks on the camshaft timing gears with the timing marks on the bearing caps, and install the camshaft timing gears with the chain onto the LH camshafts.

(c) Temporarily install the 2 camshaft timing gear bolts.
NOTICE:
Do not push the camshaft timing gear assembly against the camshaft forcibly when installing it.

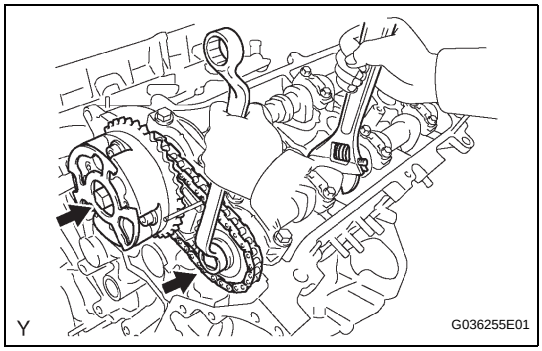

(d) Hold the hexagonal portion of the camshaft with a wrench, and tighten the 2 bolts.
Torque: 100 N*m (1,020 kgf*cm, 74 ft.*lbf)

(e) Remove the pin from tensioner No. 2.

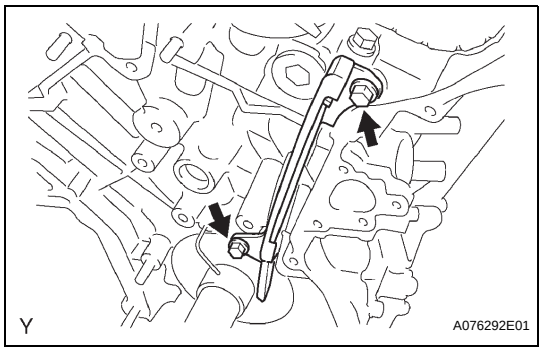

6. INSTALL NO. 1 CHAIN VIBRATION DAMPER

(a) Install the chain vibration damper with the 2 bolts.
Torque: 19 N*m (194 kgf*cm, 14 ft.*lbf)

7. INSTALL CYLINDER HEAD GASKET

(a) Remove any old packing (FIPG) material.
HINT:
Do not drop any oil on the contact surfaces of the cylinder head and cylinder block.

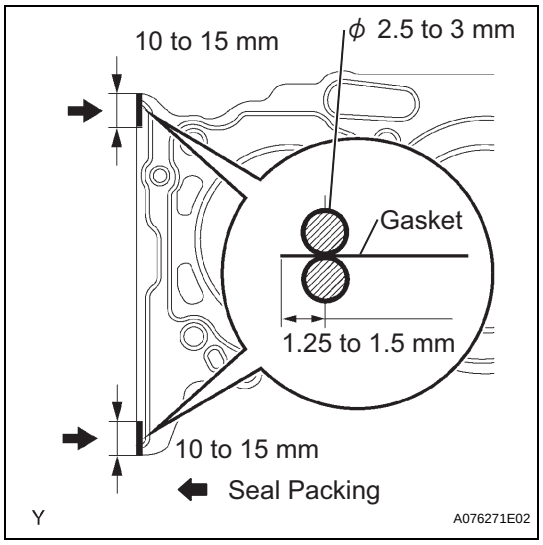

(b) Apply a continuous bead of seal packing (diameter 2.5 to 3 mm (0.098 to 0.118 in.)) to a new cylinder head gasket as shown in the illustration.
Seal packing:
Toyota Genuine Seal Packing Black, Three Bond 1207B or the equivalent
NOTICE:
Install the cylinder head within 3 minutes of applying the seal packing. Tighten the cylinder head bolts within 15 minutes of installing the cylinder head. Otherwise, the seal packing must be removed and reapplied.

EM

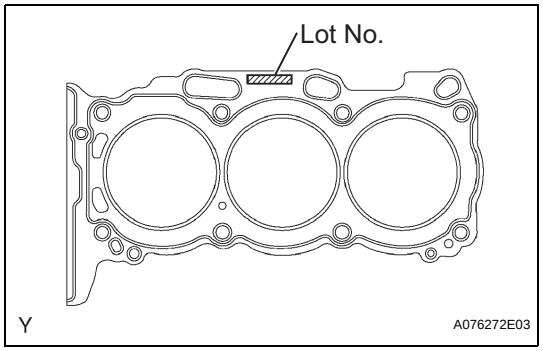

(c) Place the cylinder head gasket on the cylinder block surface with the Lot No. stamp facing upward.
NOTICE:
- **Orient the cylinder head gasket correctly.**
- **Place the cylinder head carefully in order not to damage the gasket.**

8. INSTALL CYLINDER HEAD SUB-ASSEMBLY

(a) Place the cylinder head on the cylinder head gasket.

(b) Install the 8 cylinder head bolts.
HINT:
- The cylinder head bolts are tightened in 2 successive steps (steps (*1) and (*2)).
- If any cylinder head bolts are broken or deformed, replace them.

(1) Apply a light coat of engine oil to the threads of the cylinder head bolts.

(2) Install the plate washer onto the cylinder head bolt.

(3) Using several steps, tighten each bolt uniformly with a 10 mm bi-hexagon wrench in the sequence shown in the illustration. (*1)
Torque: 36 N*m (367 kgf*cm, 27 ft.*lbf)
If any cylinder head bolts do not meet the torque specification, replace them.
NOTICE:
Do not drop the washers into the cylinder head.

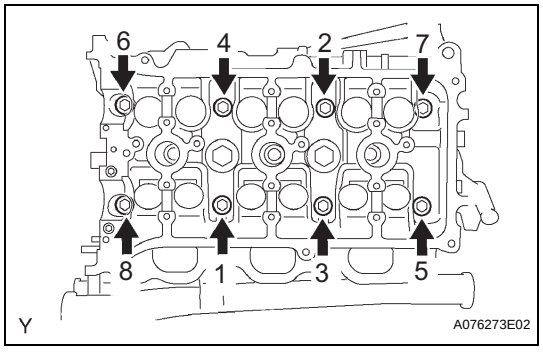

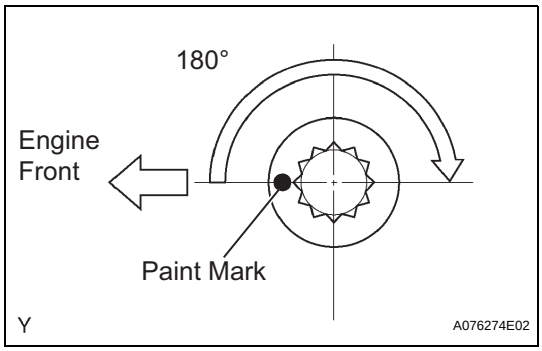

(4) Mark the front side of each cylinder head bolt with paint.
(5) Retighten the cylinder head bolts 180° as shown. (*2)
(6) Check that the painted marks are now at 180° from the engine front.

(c) Install the ground cable with the bolt.
Torque: 8.0 N*m (82 kgf*cm, 71 in.*lbf)

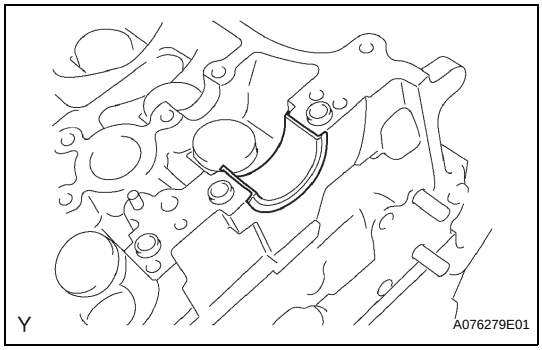

9. INSTALL NO. 2 CAMSHAFT BEARING

(a) Install the No. 2 camshaft bearing onto the cylinder head.
NOTICE:
Clean the installation planes of the back side of the bearing and cylinder head and keep them free of oil.

10. INSTALL CAMSHAFTS (for Bank 1)
NOTICE:
Keep the camshaft level while it is being removed. The camshaft thrust clearance is very small and failing to keep it level could crack or damage the cylinder head journal surface, which receives the thrust force. This could subsequently lead the camshaft to seize or break. Perform the following steps to avoid such problems.

(a) Set the crankshaft position.
(1) Using the crankshaft pulley set bolt, turn the crankshaft, and set the crankshaft set key in the left horizontal position.
NOTICE:
Installing the crankshaft at the wrong angle could cause the piston head and valve head to come into contact with each other when installing the camshaft. This could cause damage, so always set the crankshaft at the correct angle.

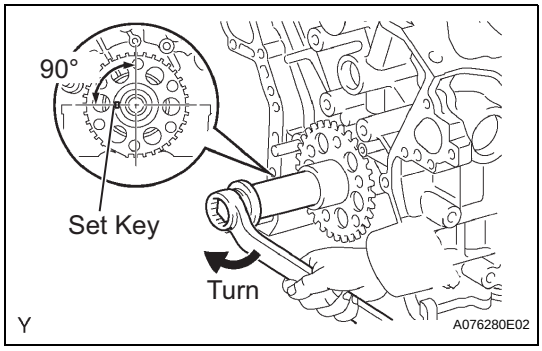

(b) Apply new engine oil to the thrust portion and journal of the camshafts.

(c) Place the 2 camshafts onto the cylinder head with the cam lobes of No. 1 cylinder facing in the directions shown in the illustration.

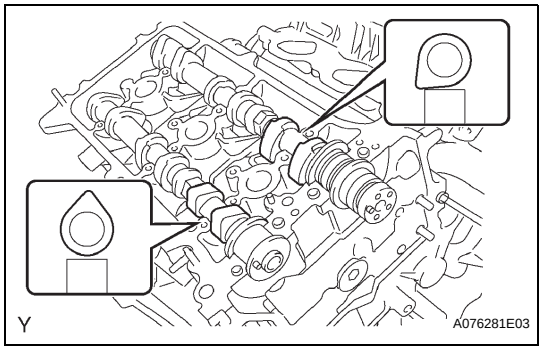

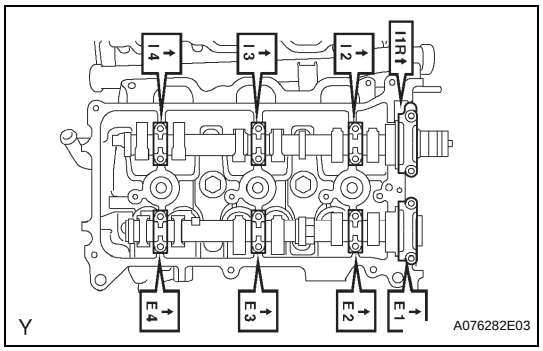

(d) Install the 8 bearing caps in the proper locations as shown.

(e) Apply a light coat of engine oil to the threads and under the heads of the bearing cap bolts.

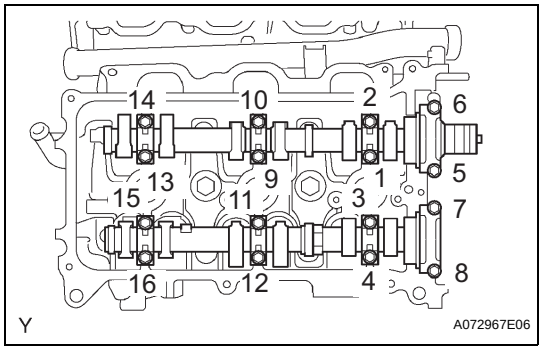

(f) Using several steps, uniformly install and tighten the 16 bearing cap bolts in the sequence shown in the illustration.

Torque: 10 mm (0.39 in.) head
9.0 N*m (92 kgf*cm, 80 in.*lbf)
12 mm (0.47 in.) head
24 N*m (245 kgf*cm, 18 ft.*lbf)

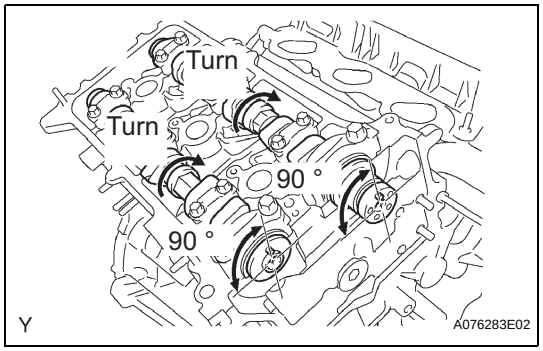

(g) Turn the camshafts clockwise until the knock pin comes to a position 90° to the cylinder head.

11. INSTALL NO. 2 CHAIN TENSIONER ASSEMBLY

(a) While pushing in the tensioner, insert a pin of ϕ 1.0 mm (0.039 in.) into the hole to fix it.

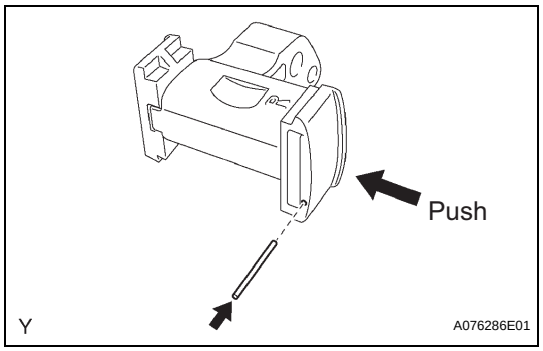

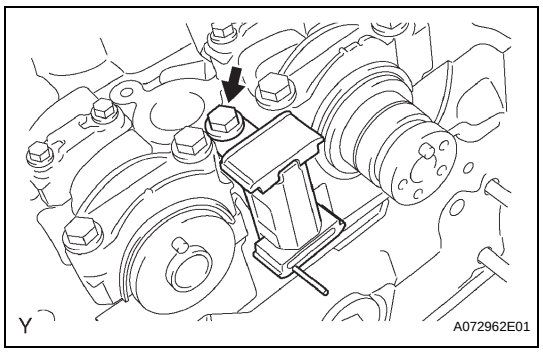

(b) Install the No. 2 chain tensioner with the bolt.
Torque: 19 N*m (194 kgf*cm, 14 ft.*lbf)

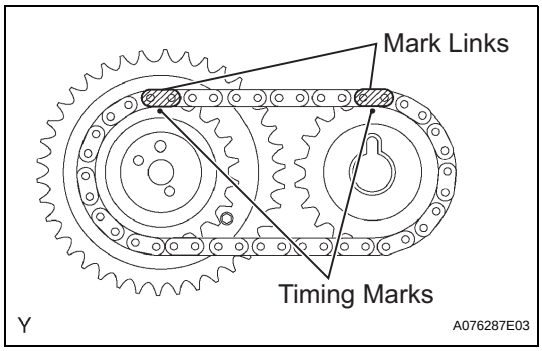

12. INSTALL CAMSHAFT TIMING GEARS AND NO. 2 CHAIN (for Bank 1)

(a) Align the yellow mark links with the timing marks (1 dot mark) of the camshaft timing gears as shown in the illustration.

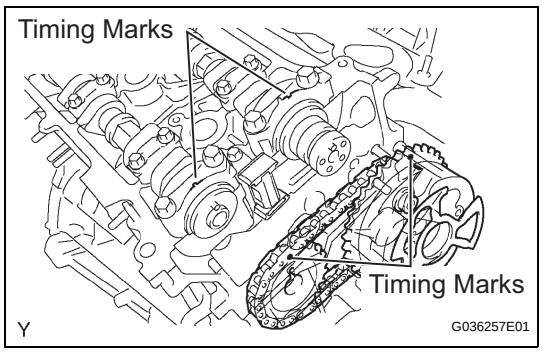

(b) Align the timing marks on the camshaft timing gears with the timing marks on the bearing caps, and install the camshaft timing gears with the chain onto the RH camshafts.

(c) Temporarily install the 2 camshaft timing gear bolts.

NOTICE:

Do not push the camshaft timing gear assembly against the camshaft forcibly when installing it.

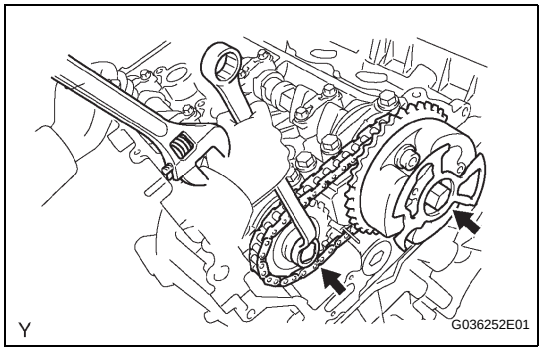

(d) Hold the hexagonal portion of the camshaft with a wrench, and tighten the 2 bolts.

Torque: 100 N*m (1,020 kgf*cm, 74 ft.*lbf)

(e) Remove the No. 2 pin from the tensioner.

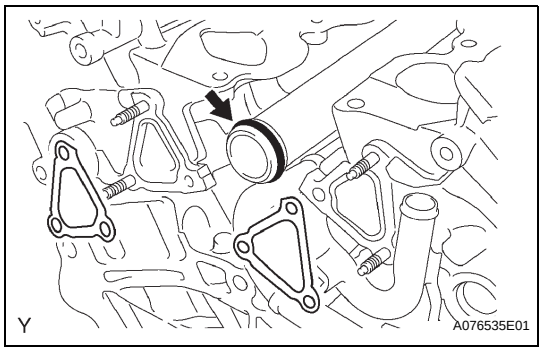

13. INSTALL WATER BY-PASS JOINT RR

(a) Install a new O-ring onto the water outlet pipe.

(b) Apply soapy water to the O-ring.

(c) Install 2 new gaskets and water by-pass joint rear with the 2 bolts and 4 nuts.

Torque: 9.0 N*m (92 kgf*cm, 80 in.*lbf)

(d) Connect the heater hose.

(e) Connect the engine coolant temperature sensor connector.

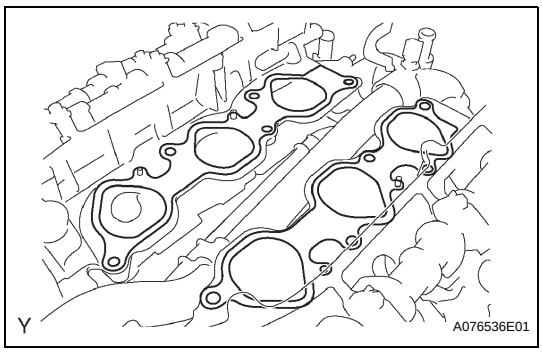

14. INSTALL INTAKE MANIFOLD

(a) Set a new gasket on each cylinder head.

NOTICE:

- **Align the port holes of the gasket and cylinder head.**
- **Orient the gasket correctly.**

(b) Set the intake manifold on the cylinder heads.

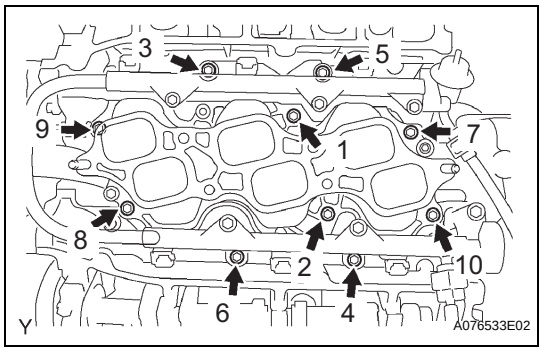

(c) Install and tighten the 10 bolts uniformly in several steps.
Torque: 26 N*m (265 kgf*cm, 19 ft.*lbf)
(d) Connect the 6 fuel injector connectors.

15. CONNECT NO. 2 FUEL PIPE SUB-ASSEMBLY (See page FU-19)

16. CONNECT NO. 1 FUEL PIPE SUB-ASSEMBLY (See page FU-17)

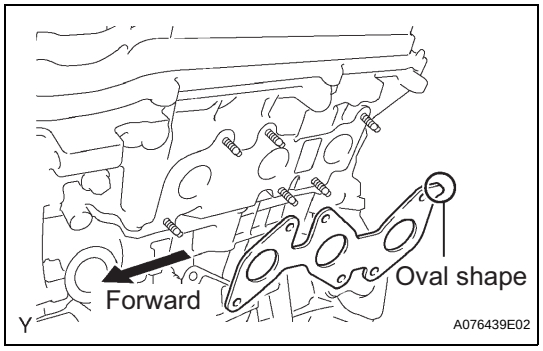

17. INSTALL EXHAUST MANIFOLD SUB-ASSEMBLY LH
(a) Set a new gasket to the bank 2 cylinder head with the oval shape facing forward.
NOTICE:
Orient the new gasket correctly.

EM

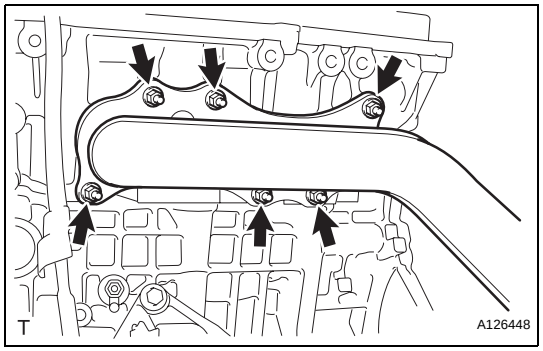

(b) Install the exhaust manifold with the 6 nuts.
Torque: 30 N*m (306 kgf*cm, 22 ft.*lbf)

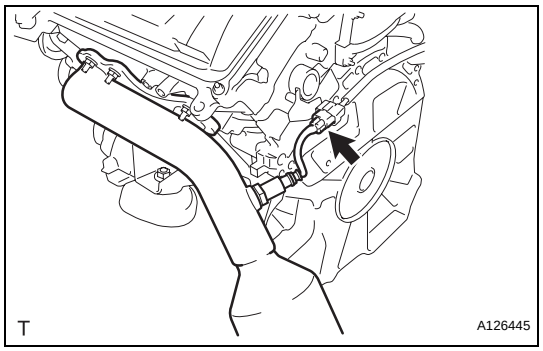

(c) Connect the air fuel ratio sensor connector.

18. INSTALL NO. 2 MANIFOLD STAY
(a) Install the No. 2 manifold stay with the 3 bolts.
Torque: 40 N*m (408 kgf*cm, 30 ft.*lbf)

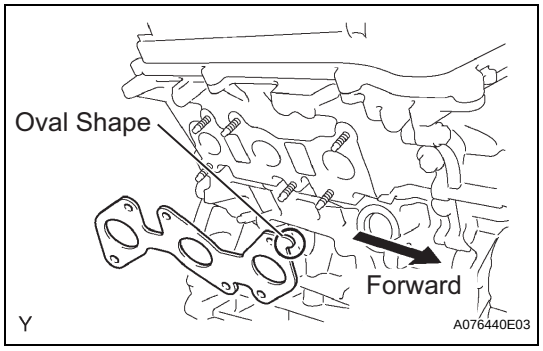

19. INSTALL EXHAUST MANIFOLD SUB-ASSEMBLY RH
(a) Set a new gasket to the bank 1 cylinder head with the oval shape facing forward.
NOTICE:
Orient the new gasket correctly.

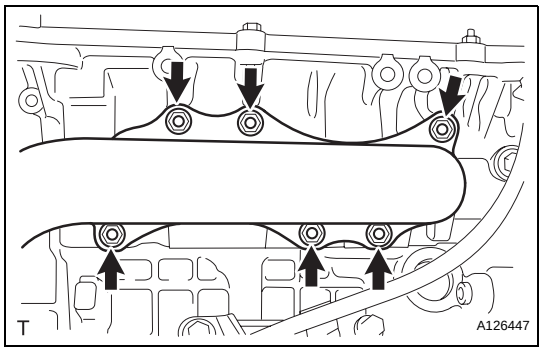

(b) Install the exhaust manifold with the 6 nuts.
Torque: 30 N*m (306 kgf*cm, 22 ft.*lbf)

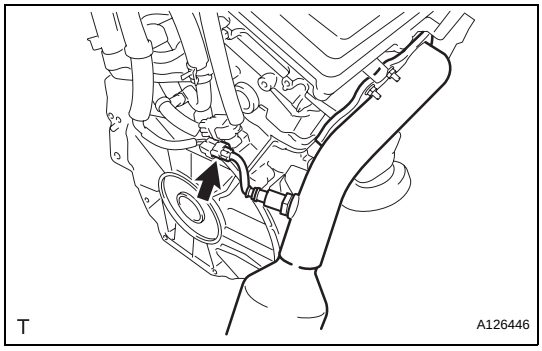

(c) Connect the air fuel ratio sensor connector.

20. INSTALL MANIFOLD STAY

(a) Install the manifold stay with the 3 bolts.
Torque: 40 N*m (408 kgf*cm, 30 ft.*lbf)

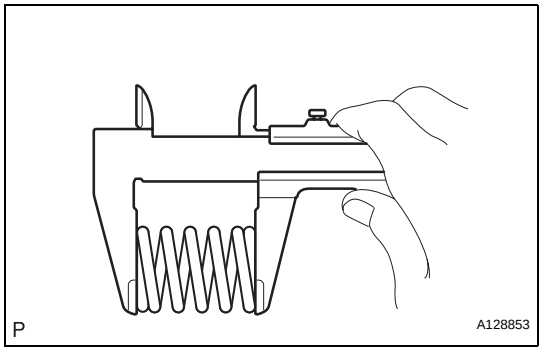

21. INSTALL FRONT EXHAUST PIPE ASSEMBLY

(a) Check the free length.
(1) Using vernier calipers, measure the free length of the compression spring.
Minimum:
40.5mm (1.594 in.)
If the free length is less that the minimum, replace the compression spring.

(b) Install a new gasket onto the exhaust manifold RH.

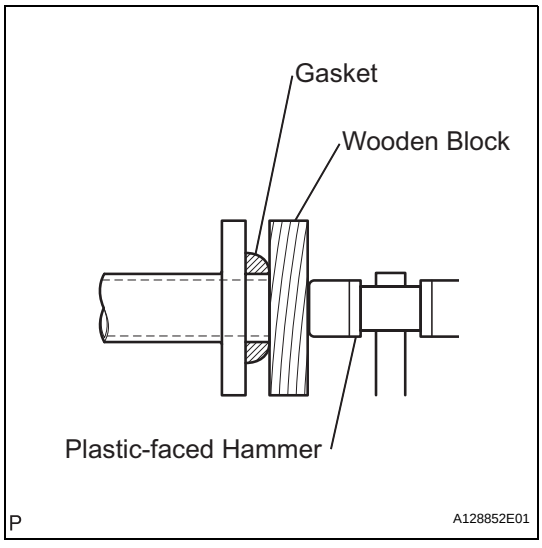

(c) Install a new gasket onto the exhaust front pipe.
(1) Using a wooden block and plastic-faced hammer, tap in the new gasket until it is flush with the exhaust front pipe.
NOTICE:
- **Make sure that the gasket is in the correct direction when installing.**
- **Do not reuse the removed gasket.**

(d) Install the exhaust front pipe with new 2 nuts.
Torque: 54 N*m (554 kgf*cm, 40 ft.*lbf)

(e) Install the exhaust center pipe onto the front exhaust pipe with the 2 bolts and 2 springs.

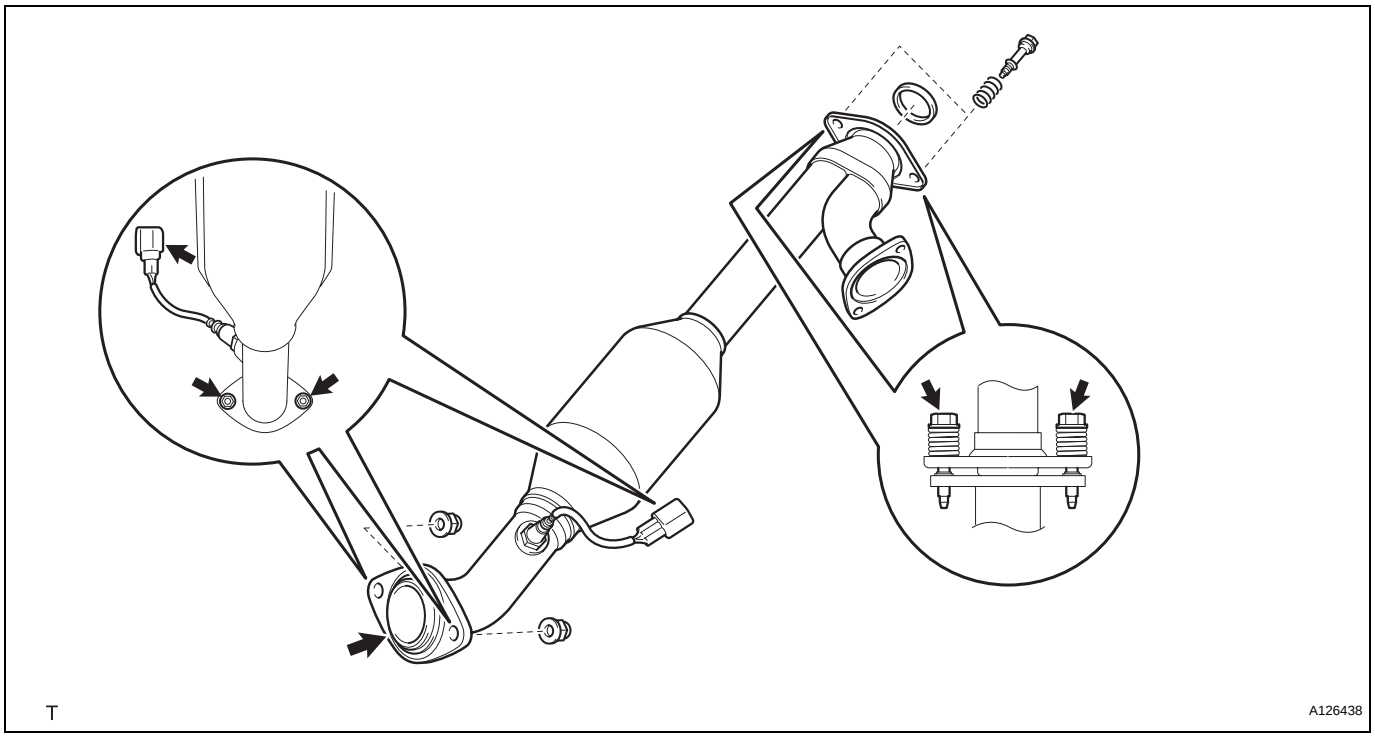

Torque: 43 N*m (438 kgf*cm, 32 ft.*lbf)

(f) Connect the oxygen sensor connector.

22. INSTALL NO. 2 FRONT EXHAUST PIPE ASSEMBLY

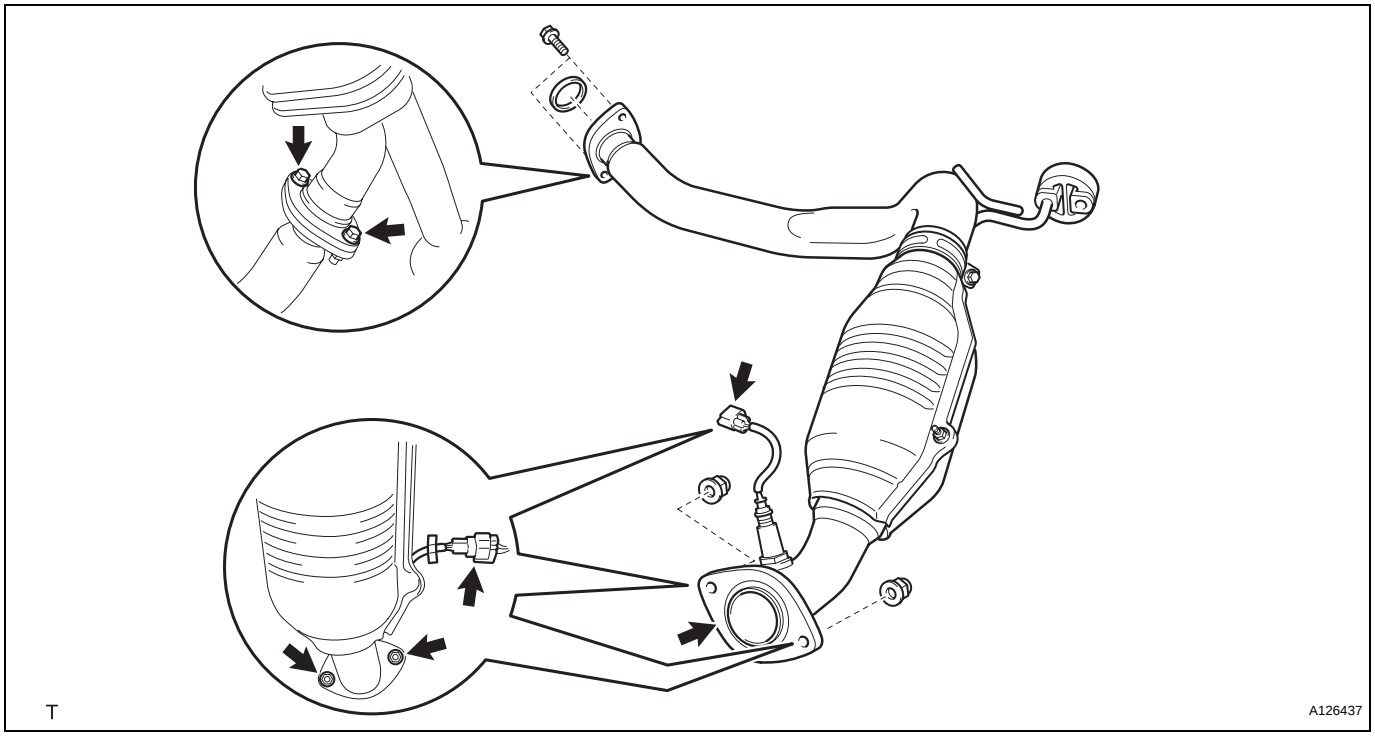

(a) Install a new gasket onto the exhaust manifold LH.

(b) Install a new gasket onto the No. 2 front exhaust pipe.

(c) Install the No. 2 front exhaust pipe with the 2 new nuts and 2 bolts.
Torque: Nut
54 N*m (554 kgf*cm, 40 ft.*lbf)
Bolt
48 N*m (489 kgf*cm, 35 ft.*lbf)
(d) Connect the oxygen sensor connector.

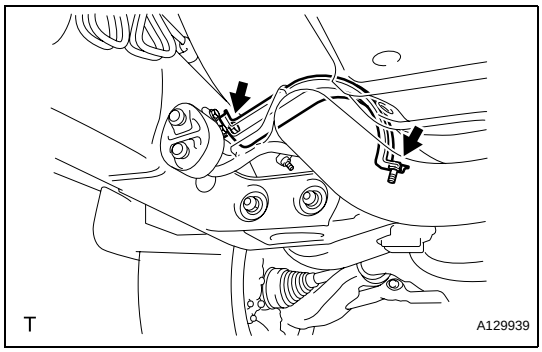

23. INSTALL EXHAUST PIPE STOPPER BRACKET (for 4WD)
(a) Install the exhaust pipe stopper bracket with the 2 bolts.
Torque: 19 N*m (193 kgf*cm, 14 ft.*lbf)

24. INSTALL NO. 1 COOL AIR INLET
(a) Install the cool air inlet with the 2 bolts.
Torque: 12 N*m (122 kgf*cm, 9.0 ft.*lbf)

25. INSTALL CHAIN SUB-ASSEMBLY
Refer to the procedures up to "INSTALL CHAIN TENSIONER SLIPPER" (See page EM-27).

26. CHECK FOR FUEL LEAKAGE

27. CHECK FOR EXHAUST GAS LEAKAGE

28. INSPECT IGNITION TIMING (See page EM-1)

29. INSPECT ENGINE IDLING SPEED (See page EM-2)

30. REMOVE COMPRESSION (See page EM-3)

31. INSPECT CO/HC (See page EM-3)

32. INSPECT AND ADJUST FRONT WHEEL ALIGNMENT (See page SP-2)

REPAIR

1. REPAIR VALVE SEAT
NOTICE:
Use a cutter to gradually smooth the intake valve seat.
(a) If the seating is too high on the valve face, use 30° and 45° cutters to correct the seat.

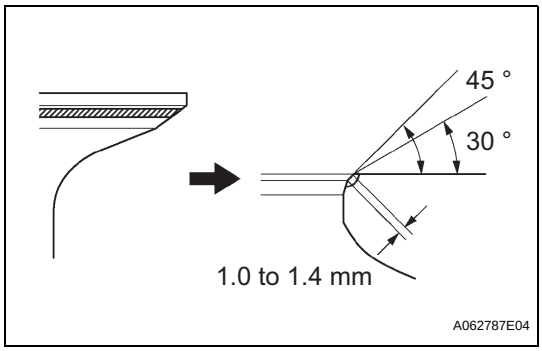

(b) Intake side:
If the seating is too low on the valve face, use 60° and 45° cutters to correct the seat.

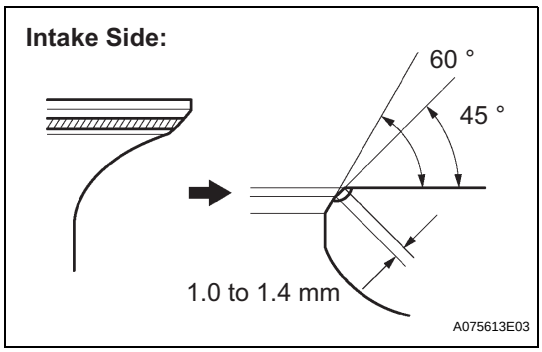

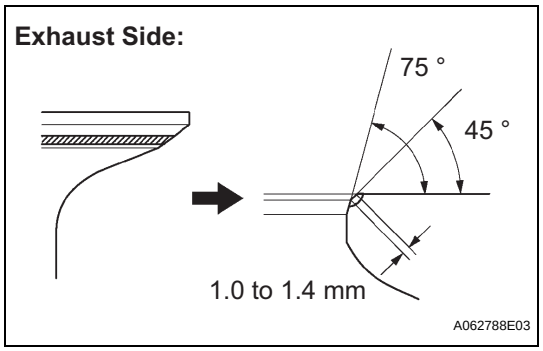

(c) Exhaust side:
If the seating is too low on the valve face, use 75° and 45° cutters to correct the seat.

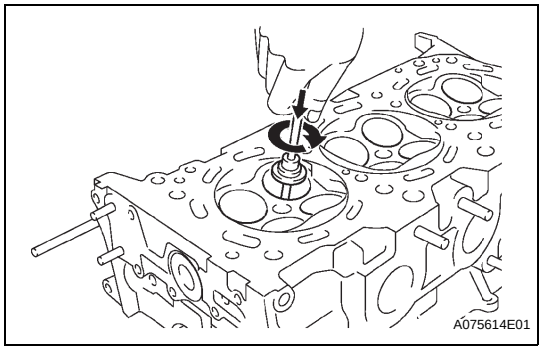

(d) Lap the valve and valve seat with an abrasive compound by hand.
(e) After lapping, clean the valve and valve seat.

ENGINE ASSEMBLY

COMPONENTS

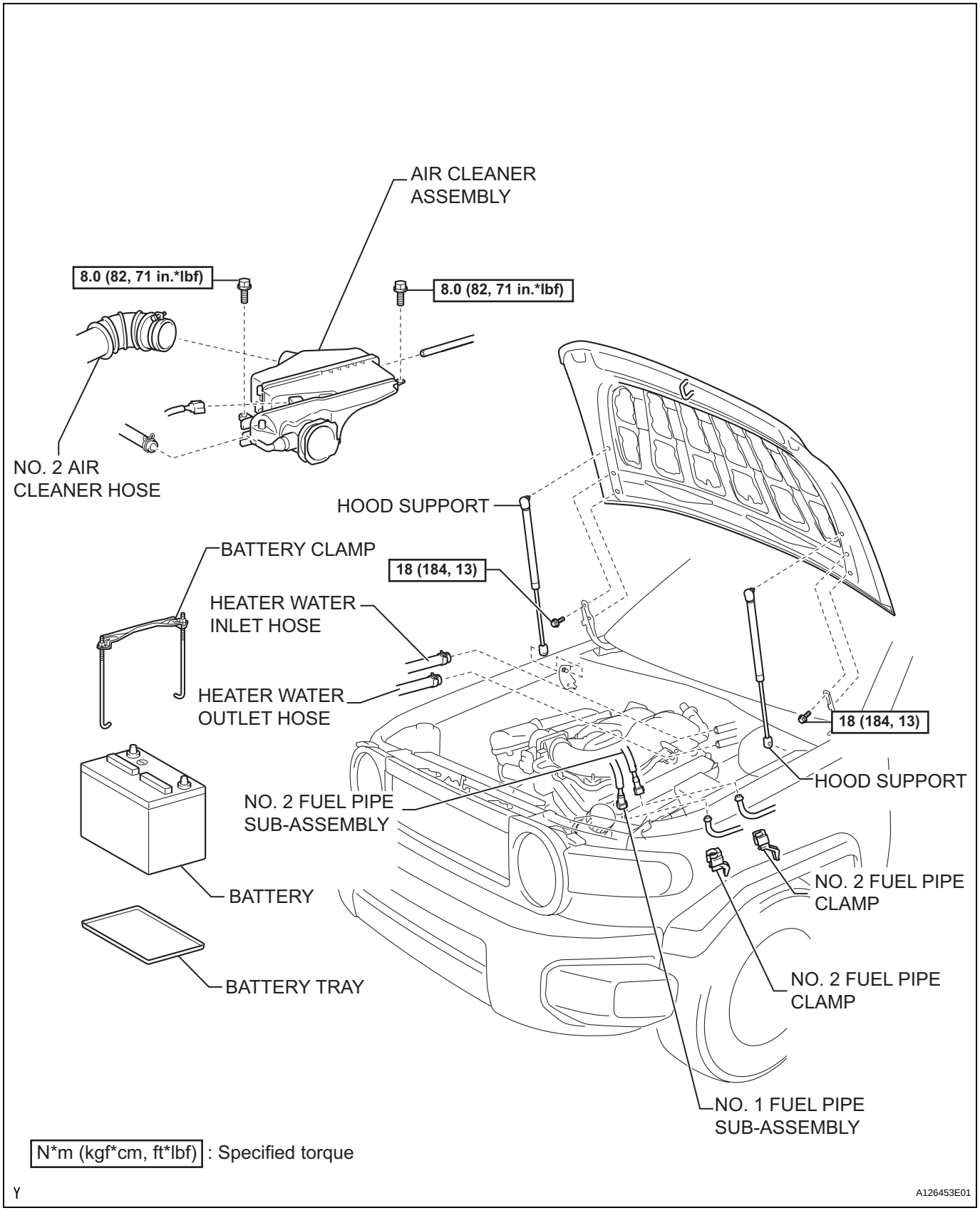

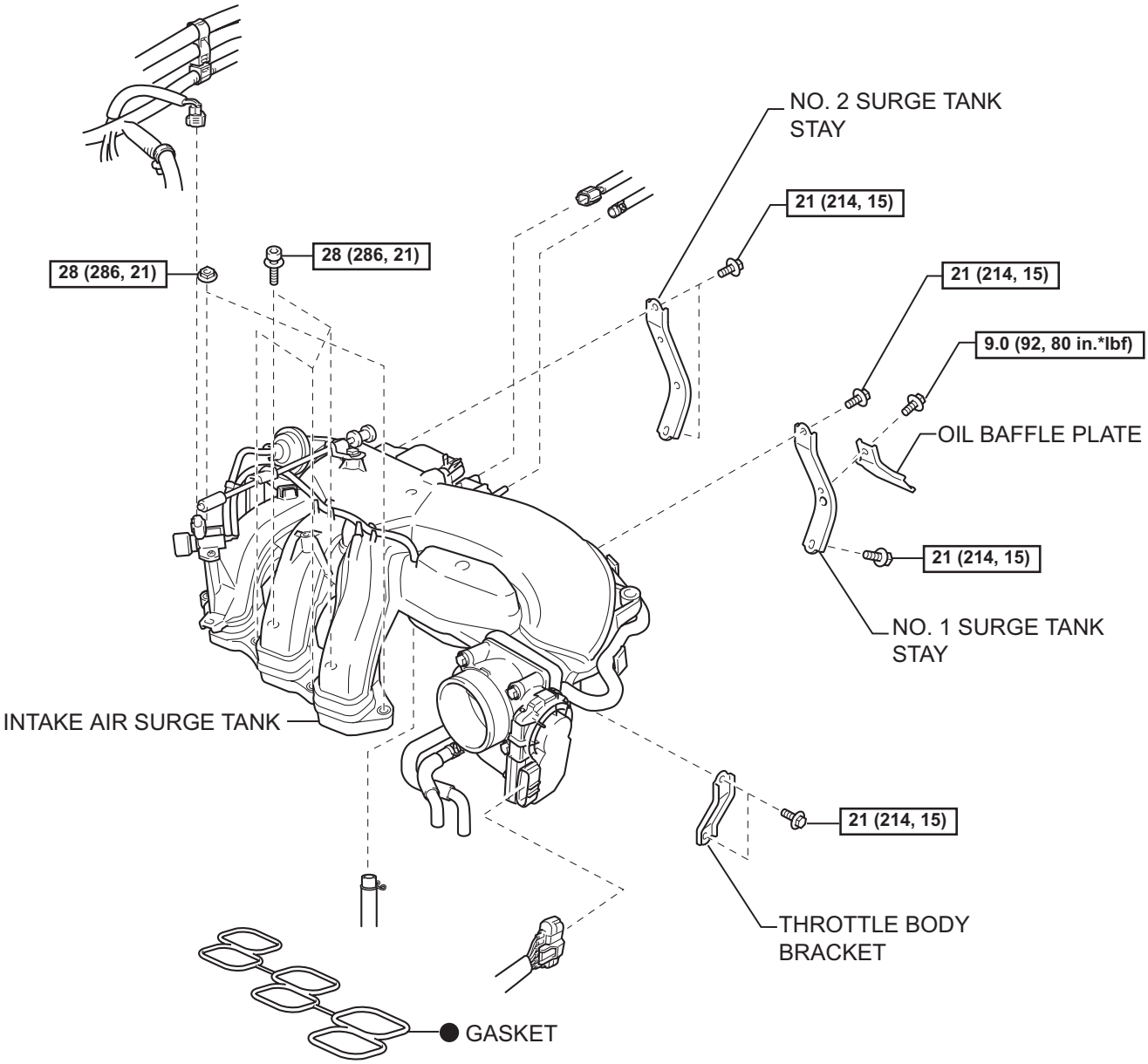

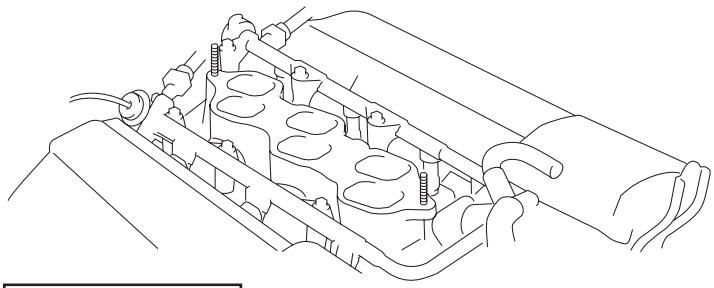

N*m (kgf*cm, ft*lbf) : Specified torque

● Non-reusable part

Y

A126476E01

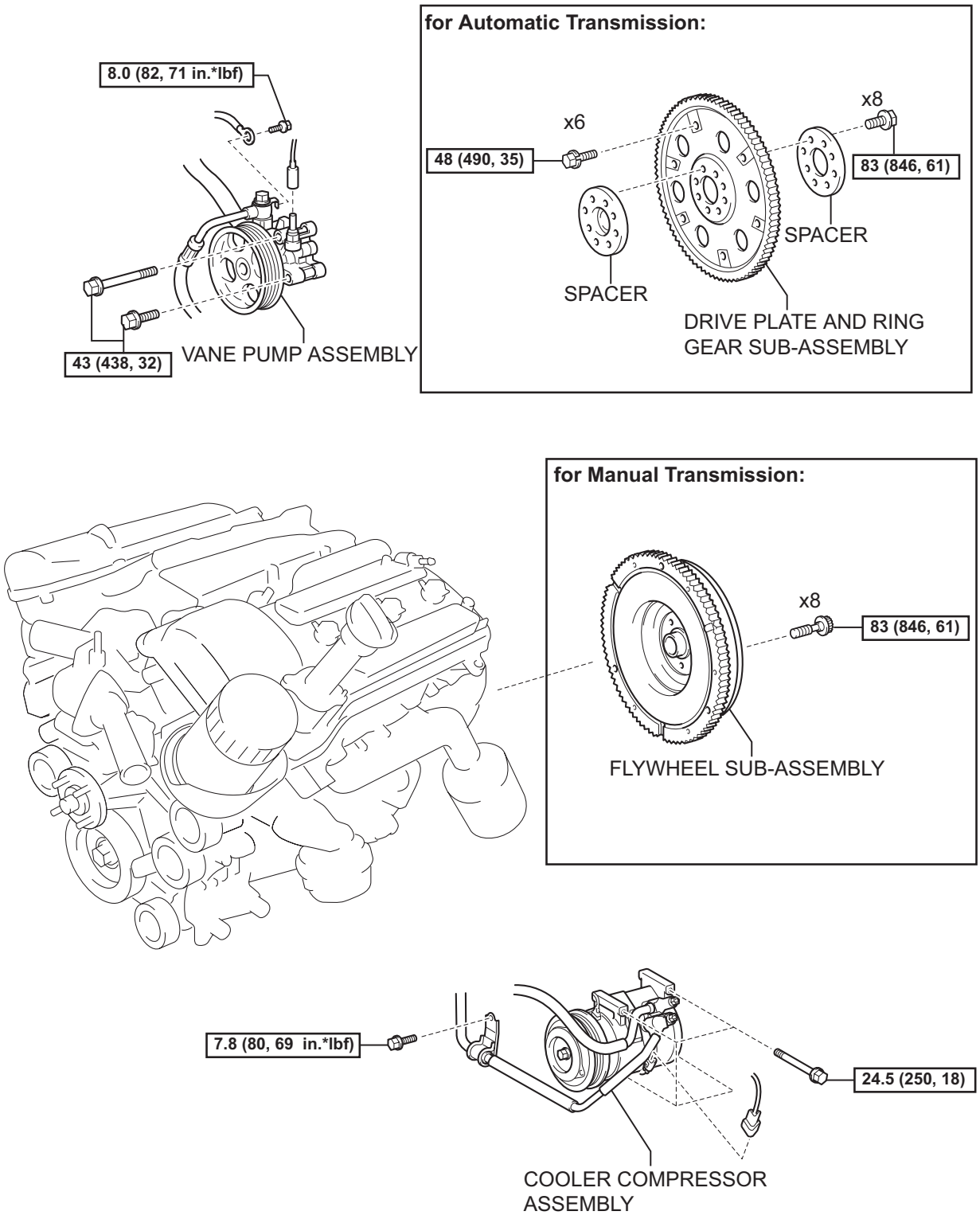

EM

N*m (kgf*cm, ft*lbf) : Specified torque

● Non-reusable part

Y

A126454E01

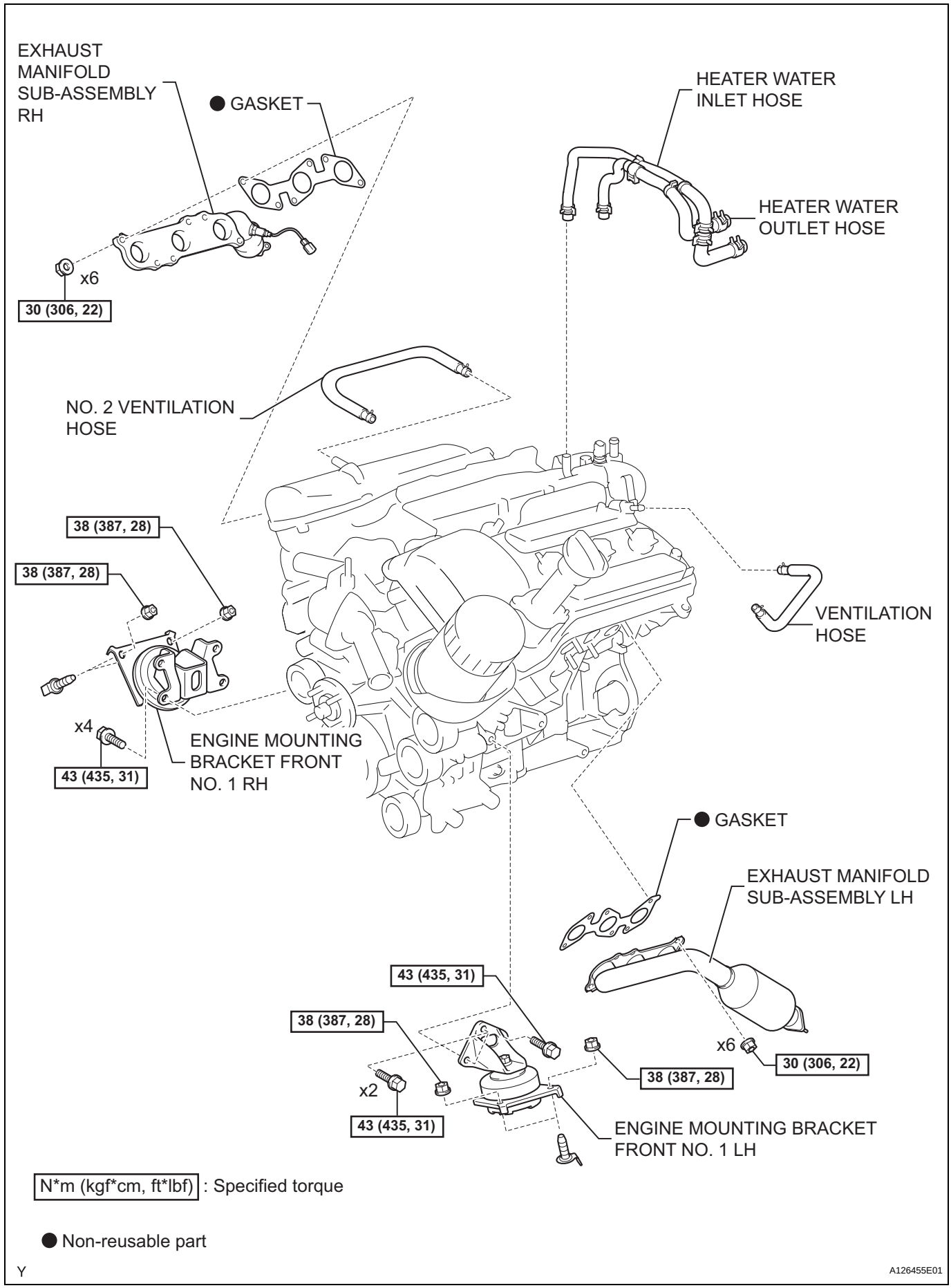
EXHAUST MANIFOLD SUB-ASSEMBLY RH
● GASKET
x6
30 (306, 22)
HEATER WATER INLET HOSE
HEATER WATER OUTLET HOSE
NO. 2 VENTILATION HOSE
38 (387, 28)
38 (387, 28)
VENTILATION HOSE
x4
43 (435, 31)
ENGINE MOUNTING BRACKET FRONT NO. 1 RH
● GASKET
EXHAUST MANIFOLD SUB-ASSEMBLY LH
43 (435, 31)
38 (387, 28)
x6
30 (306, 22)
38 (387, 28)
x2
43 (435, 31)
ENGINE MOUNTING BRACKET FRONT NO. 1 LH
N*m (kgf*cm, ft*lbf) : Specified torque
● Non-reusable part
Y
A126455E01

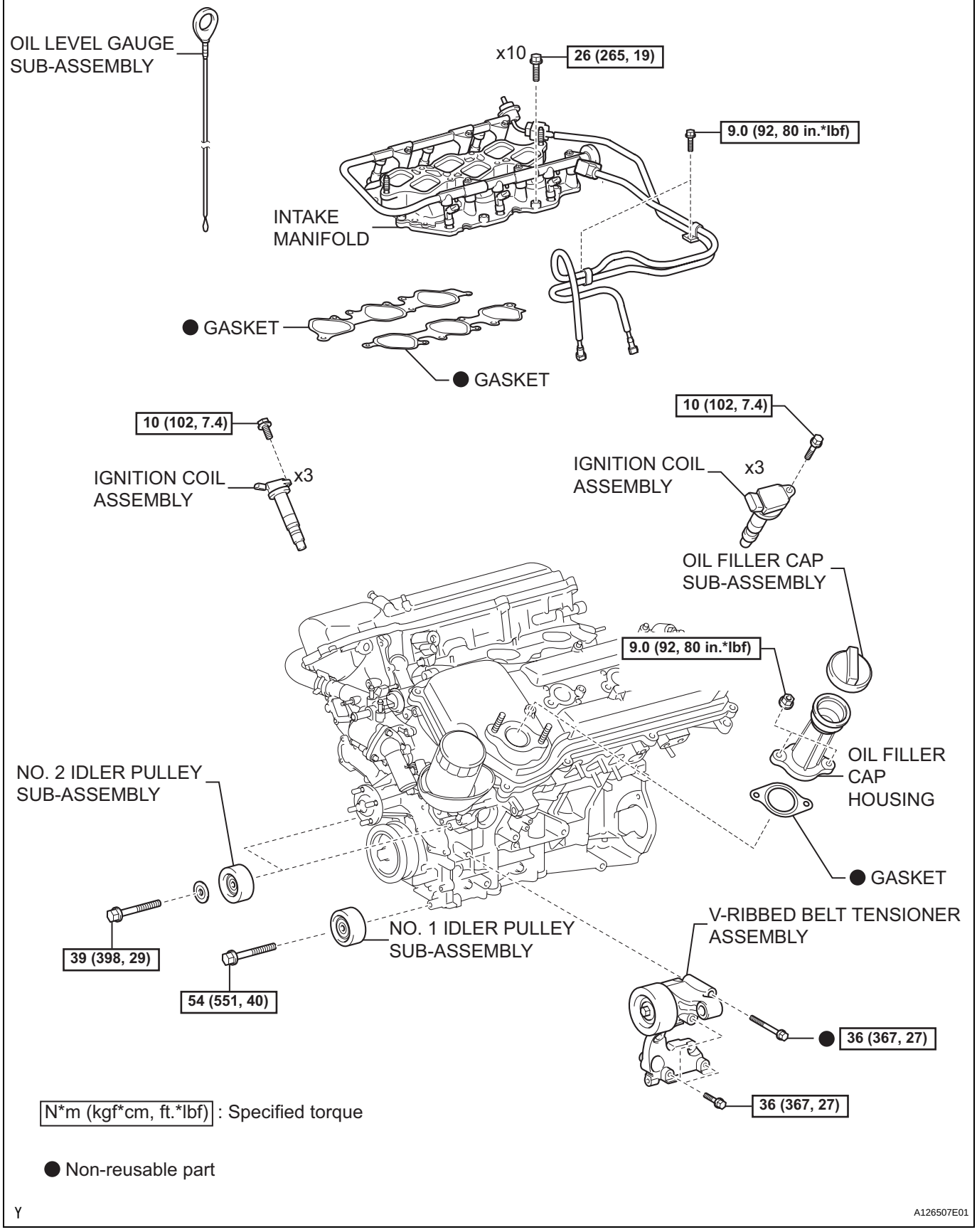
OIL LEVEL GAUGE SUB-ASSEMBLY
x10
26 (265, 19)
9.0 (92, 80 in.*lbf)
INTAKE MANIFOLD
● GASKET
● GASKET
10 (102, 7.4)
IGNITION COIL ASSEMBLY
x3
10 (102, 7.4)
IGNITION COIL ASSEMBLY
x3
OIL FILLER CAP SUB-ASSEMBLY
9.0 (92, 80 in.*lbf)
OIL FILLER CAP HOUSING
● GASKET
NO. 2 IDLER PULLEY SUB-ASSEMBLY
39 (398, 29)
NO. 1 IDLER PULLEY SUB-ASSEMBLY
54 (551, 40)
V-RIBBED BELT TENSIONER ASSEMBLY
● 36 (367, 27)
36 (367, 27)
N*m (kgf*cm, ft.*lbf) : Specified torque
● Non-reusable part
A126507E01

EM

EM

REMOVAL

1. **DISCHARGE FUEL SYSTEM PRESSURE**
   (See page FU-1)
2. **REMOVE BATTERY**
3. **DRAIN ENGINE COOLANT (See page CO-3)**
4. **DRAIN ENGINE OIL (See page LU-4)**
5. **REMOVE HOOD SUPPORT (See page ED-5)**
6. **REMOVE HOOD SUB-ASSEMBLY**
   (a) Disconnect the windshield washer hose.
   (b) Remove the 4 bolts, then remove the hood.

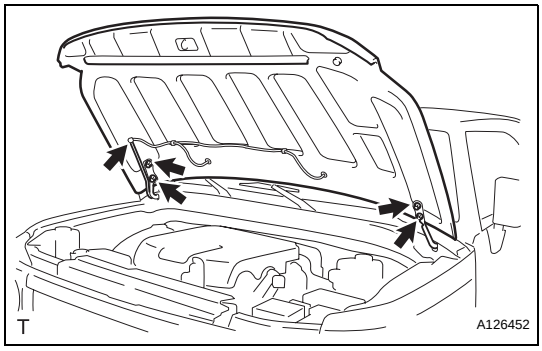

7. **REMOVE RADIATOR ASSEMBLY**
   Refer to the procedures up to " REMOVE RADIATOR ASSEMBLY" (See page CO-22).
8. **REMOVE MANUAL TRANSMISSION UNIT ASSEMBLY (for Manual Transmission)**
   Refer to the procedures up to " REMOVE MANUAL TRANSMISSION UNIT ASSEMBLY" (See page MT-8).
9. **REMOVE AUTOMATIC TRANSMISSION ASSEMBLY (for Automatic Transmission)**
   Refer to the procedures up to " REMOVE AUTOMATIC TRANSMISSION ASSEMBLY" (See page AT-172 or AT-178).
10. **REMOVE CLUTCH DISC ASSEMBLY (for Manual Transmission)**
    Refer to the procedures up to " REMOVE CLUTCH DISC ASSEMBLY" (See page CL-21).
11. **REMOVE FLYWHEEL SUB-ASSEMBLY (for Manual Transmission)**
    (a) Using SST, hold the crankshaft.
    SST 09213-54015 (91651-60855), 09330-00021

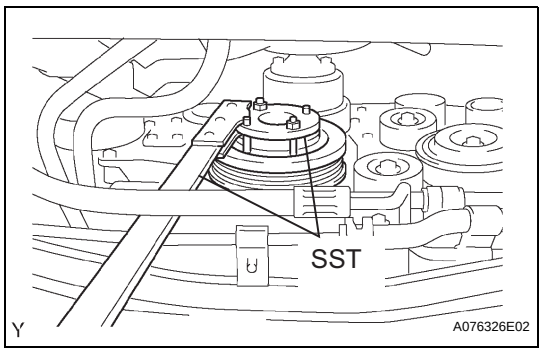

(b) Remove the 8 bolts, then remove the flywheel and 2 spacers.

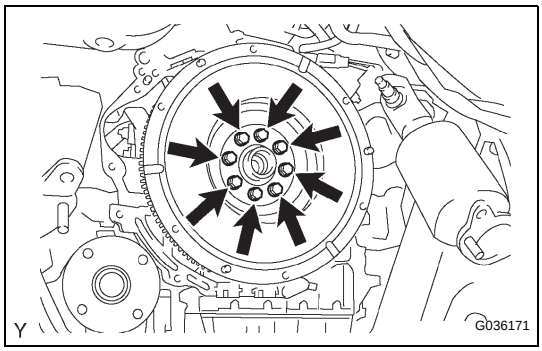

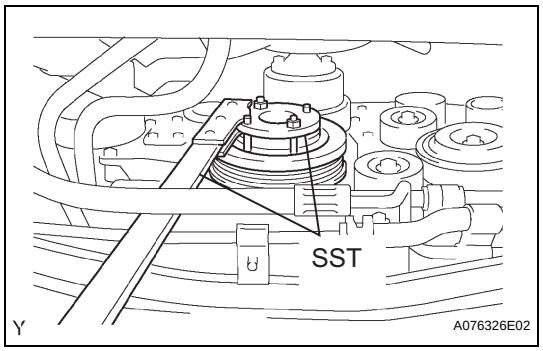

12. REMOVE DRIVE PLATE AND RING GEAR SUB-ASSEMBLY (for Automatic Transmission)

(a) Using SST, hold the crankshaft.
SST 09213-54015 (91651-60855), 09330-00021

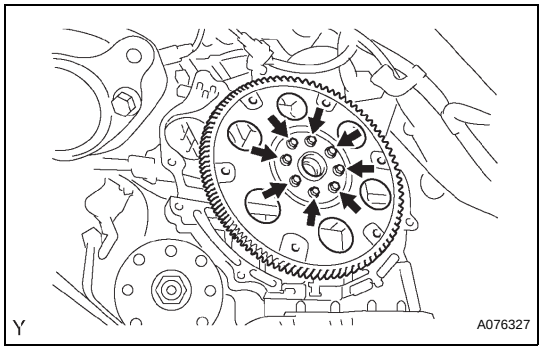

(b) Remove the 8 bolts, then remove the drive plate and 2 spacers.

13. REMOVE THROTTLE BODY BRACKET (See page FU-11)

14. REMOVE OIL BAFFLE PLATE (See page FU-11)

15. REMOVE NO. 1 SURGE TANK STAY (See page FU-11)

16. REMOVE NO. 2 SURGE TANK STAY (See page FU-12)

17. REMOVE INTAKE AIR SURGE TANK (See page FU-12)

18. REMOVE GENERATOR ASSEMBLY (See page CH-10)

19. SEPARATE COOLER COMPRESSOR ASSEMBLY (See page ES-420)

20. REMOVE VANE PUMP ASSEMBLY (See page PS-8)

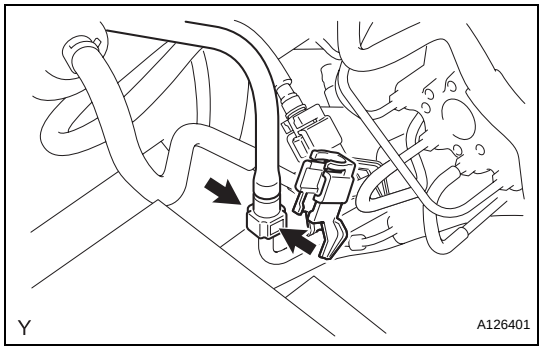

21. DISCONNECT NO. 1 FUEL PIPE SUB-ASSEMBLY

(a) Remove the No. 2 fuel pipe clamp.

(b) Pinch the retainer as illustrated, then pull the fuel tube connector out of the pipe.

NOTICE:

- **Remove any dirt and foreign matter from the fuel tube connector before performing this work.**
- **Do not allow any scratches or foreign matter onto the parts when disconnecting, as the fuel tube connector has the O-rings that seals the pipe.**
- **Perform this work by hand. Do not use any tools.**
- **Do not forcibly bend, twist or turn the nylon tube.**
- **Protect the disconnected part by covering it with a vinyl bag after disconnecting the fuel tube.**
- **If the fuel tube connector and pipe are stuck, push and pull to release them.**

EM

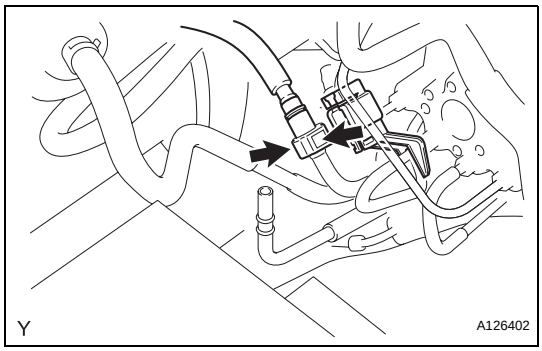

22. DISCONNECT NO. 2 FUEL PIPE SUB-ASSEMBLY

(a) Remove the No. 2 fuel pipe clamp.

(b) Pinch the retainer as illustrated, then pull the fuel tube connector out of the pipe.

NOTICE:

- **Remove any dirt and foreign matter from the fuel tube connector before performing this work.**
- **Do not allow any scratches or foreign matter onto the parts when disconnecting, as the fuel tube connector has the O-rings that seals the pipe.**
- **Perform this work by hand. Do not use any tools.**
- **Do not forcibly bend, twist or turn the nylon tube.**
- **Protect the disconnected part by covering it with a vinyl bag after disconnecting the fuel tube.**
- **If the fuel tube connector and pipe are stuck, push and pull to release them.**

EM

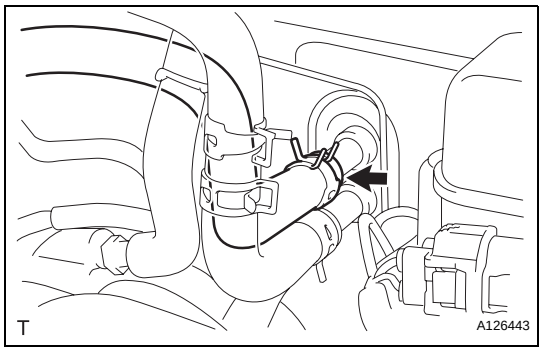

23. DISCONNECT HEATER INLET WATER HOSE

(a) Disconnect the heater inlet water hose shown in the illustration.

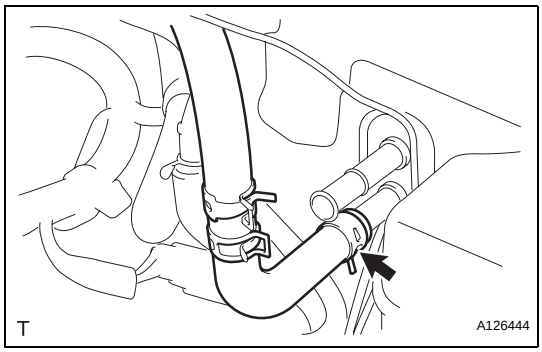

24. DISCONNECT HEATER WATER OUTLET HOSE A (FROM HEATER UNIT)

(a) Disconnect the heater outlet water hose shown in the illustration.

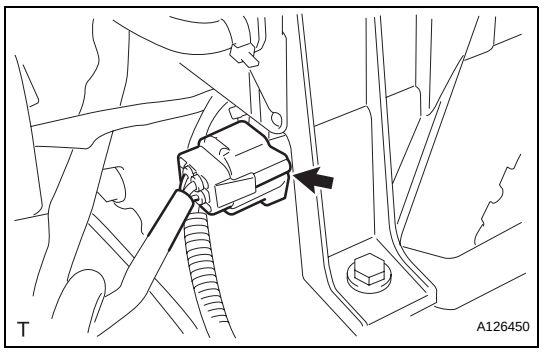

25. REMOVE NO. 2 ENGINE WIRE

(a) Disconnect the connector from the engine room relay block.

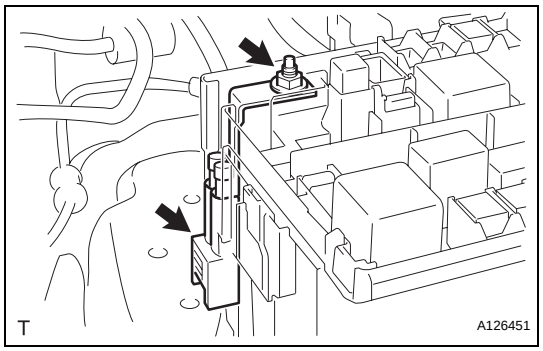

(b) Remove the nut and separate the engine wire from the engine room relay block.

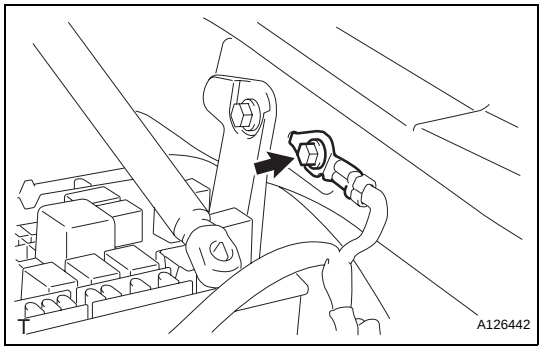

(c) Remove the bolt and separate the ground wire from body.

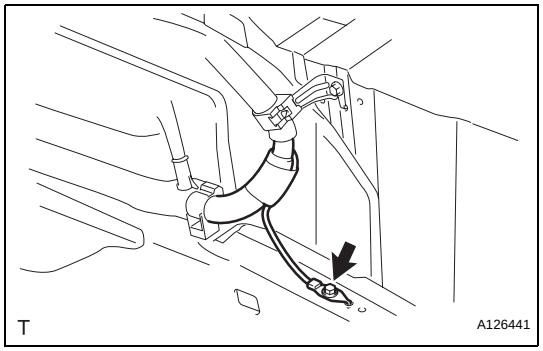

(d) Remove the bolt and separate the ground wire from the frame.

26. SEPARATE ENGINE WIRE

(a) Remove the glove compartment door (see page IP-15)

(b) Disconnect the connector from the four wheel drive ECU (for Automatic Transmission 4WD).

(c) Disconnect the 3 connectors from the ECM.

(d) Disconnect the 2 connectors from the A/C unit.

(e) Pull the wire harness into the engine room.

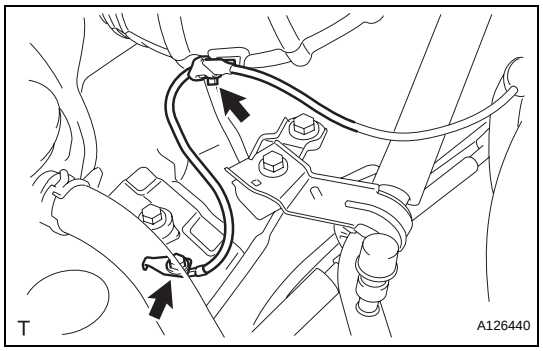

(f) Remove the bolt and disengage the clamp, then separate the ground wire from the body.

(g) Disconnect the front differential connector (for Automatic Transmission 4WD).

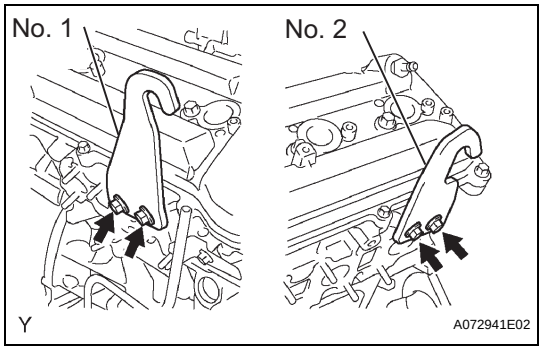

27. REMOVE ENGINE ASSEMBLY

(a) Install the 2 engine hangers with the 4 bolts as shown in the illustration.

Part No:

Engine hanger No. 1 12281-31070

Engine hanger No. 2 12282-31050

Bolt 90119-08177

Torque: 33 N*m (336 kgf*cm, 24 ft.*lbf)

(b) Attach the engine sling device and hang the engine with a chain block.

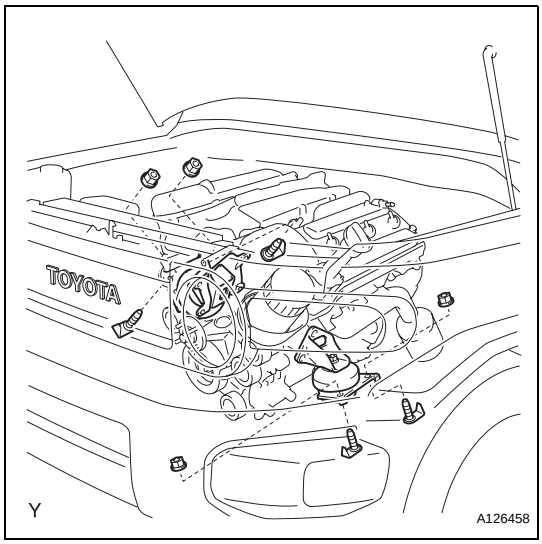

(c) Remove the 4 bolts and 4 nuts, and separate the engine mounting brackets from the frame brackets.
(d) Lift the engine out of the vehicle carefully.
NOTICE:
Make sure that the engine is clear of all wiring and hoses.
(e) Place the engine on a work bench.

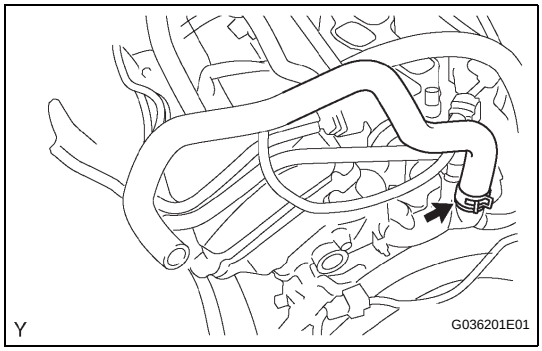

28. REMOVE HEATER INLET WATER HOSE

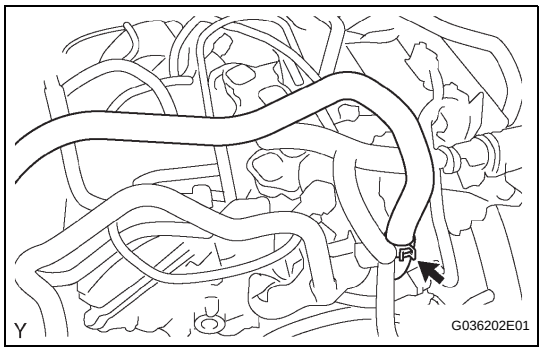

29. REMOVE HEATER OUTLET WATER HOSE
(a) Disconnect and remove the heater outlet water hose with heater water outlet hose A.

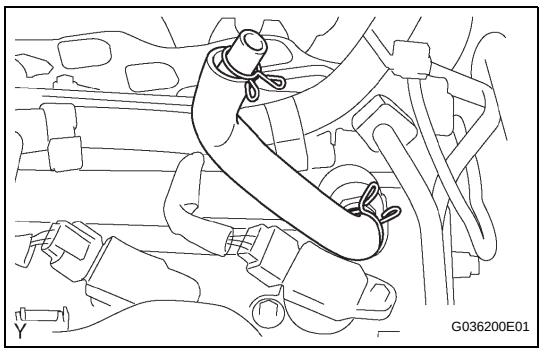

30. REMOVE VENTILATION HOSE

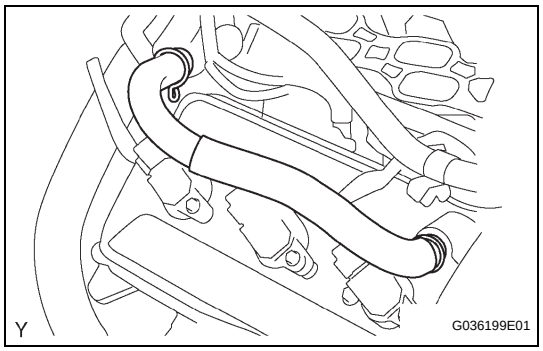

31. REMOVE NO. 2 VENTILATION HOSE

32. REMOVE MANIFOLD STAY (See page EM-68)

33. REMOVE EXHAUST MANIFOLD SUB-ASSEMBLY RH (See page EM-68)

34. REMOVE NO. 2 MANIFOLD STAY (See page EM-68)

35. REMOVE EXHAUST MANIFOLD SUB-ASSEMBLY LH (See page EM-69)

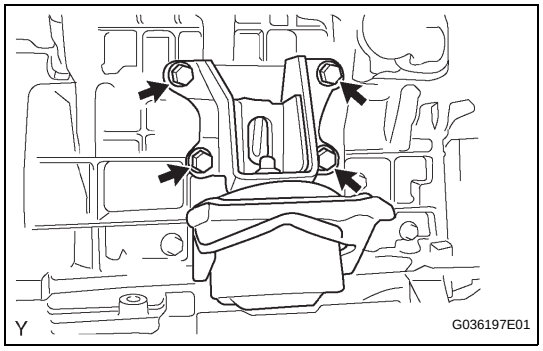

36. REMOVE FRONT NO. 1 ENGINE MOUNTING BRACKET RH

(a) Remove the 4 bolts, then remove the engine mounting bracket RH.

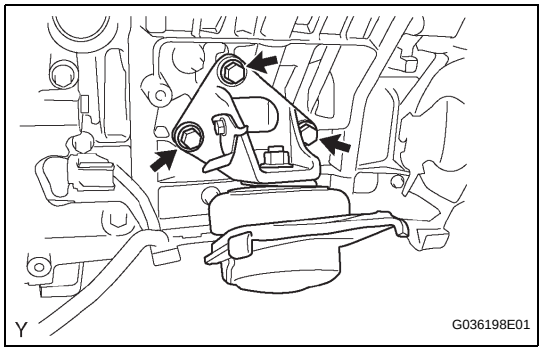

37. REMOVE FRONT NO. 1 ENGINE MOUNTING BRACKET LH

(a) Remove the 3 bolts, then remove the engine mounting bracket LH.

38. REMOVE V-RIBBED BELT TENSIONER ASSEMBLY (See page EM-22)

39. REMOVE NO. 2 IDLER PULLEY SUB-ASSEMBLY (See page EM-23)

40. REMOVE NO. 1 IDLER PULLEY SUB-ASSEMBLY (See page EM-23)

41. REMOVE INTAKE MANIFOLD (See page EM-69)

42. REMOVE IGNITION COIL ASSEMBLY (See page IG-8)

43. REMOVE OIL FILLER CAP SUB-ASSEMBLY

44. REMOVE OIL FILLER CAP HOUSING

(a) Remove the 2 nuts, oil filler cap housing and gasket.

45. REMOVE OIL LEVEL GAUGE SUB-ASSEMBLY

46. REMOVE ENGINE WIRE

(a) Remove the bolt and separate the ground wire from the bank 1 cylinder head.
(b) Remove the bolt and separate the ground wire from the bank 2 cylinder head.
(c) Disconnect the connector from the knock sensor sub wire.
(d) Disconnect all connectors from the engine.
(e) Disengage all clamps and remove the engine wire.

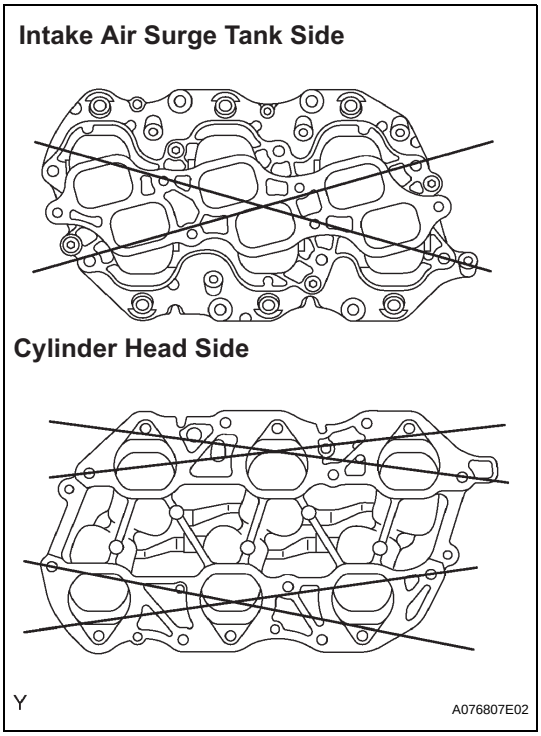

INSPECTION

1. INSPECT INTAKE MANIFOLD FOR WARPAGE

(a) Using a precision straight edge and feeler gauge, measure the warpage of the contact surfaces of the cylinder head and intake air surge tank.

Maximum warpage:

Intake air surge tank side:

0.8 mm (0.031 in.)

Cylinder head side:

0.2 mm (0.008 in.)

If the warpage is greater than the maximum, replace the intake manifold.

INSTALLATION

1. **INSTALL ENGINE WIRE**
   (a) Connect the connectors to the engine.
   (b) Engage the clamps to the engine.
   (c) Connect the connector to the knock sensor sub wire.
   (d) Install the ground wire onto the bank 2 cylinder head with the bolt.
   Torque: 8.0 N*m (82 kgf*cm, 71 in.*lbf)
   (e) Install the ground wire onto the bank 1 cylinder head with the bolt.
   Torque: 8.0 N*m (82 kgf*cm, 71 in.*lbf)
2. **INSTALL OIL LEVEL GAUGE SUB-ASSEMBLY**
3. **INSTALL OIL FILLER CAP HOUSING**
   (a) Install a new gasket.
   (b) Install the oil filler cap housing with the 2 nuts.
   Torque: 9.0 N*m (92 kgf*cm, 80 in.*lbf)
4. **INSTALL OIL FILLER CAP SUB-ASSEMBLY**
5. **INSTALL IGNITION COIL ASSEMBLY (See page IG-8)**
6. **INSTALL INTAKE MANIFOLD (See page EM-96)**
7. **INSTALL NO. 1 IDLER PULLEY SUB-ASSEMBLY (See page EM-32)**
8. **INSTALL NO. 2 IDLER PULLEY SUB-ASSEMBLY (See page EM-33)**
9. **INSTALL V-RIBBED BELT TENSIONER ASSEMBLY (See page EM-33)**
10. **INSTALL FRONT NO. 1 ENGINE MOUNTING BRACKET LH**
    (a) Install the engine mounting bracket with engine mounting insulator with the 3 bolts.
    Torque: 43 N*m (435 kgf*cm, 31 ft.*lbf)

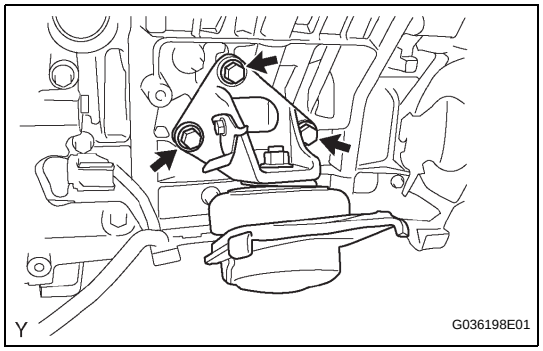

11. **INSTALL FRONT NO. 1 ENGINE MOUNTING BRACKET RH**
    (a) Install the engine mounting bracket with engine mounting insulator with the 4 bolts.
    Torque: 43 N*m (435 kgf*cm, 31 ft.*lbf)
12. **INSTALL EXHAUST MANIFOLD SUB-ASSEMBLY LH (See page EM-96)**
13. **INSTALL NO. 2 MANIFOLD STAY (See page EM-96)**
14. **INSTALL EXHAUST MANIFOLD SUB-ASSEMBLY RH (See page EM-97)**
15. **INSTALL MANIFOLD STAY (See page EM-97)**

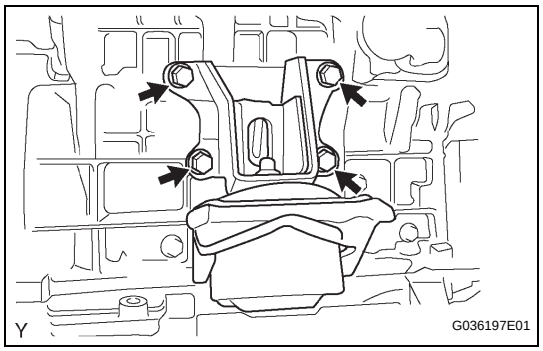

EM

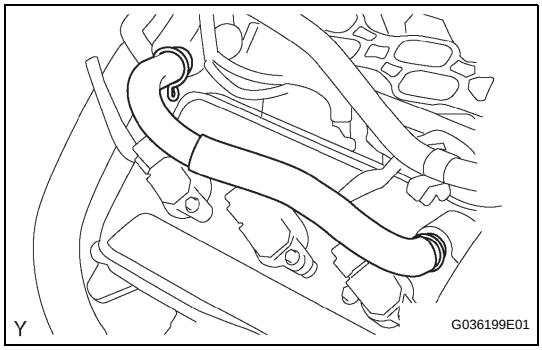

16. INSTALL NO. 2 VENTILATION HOSE

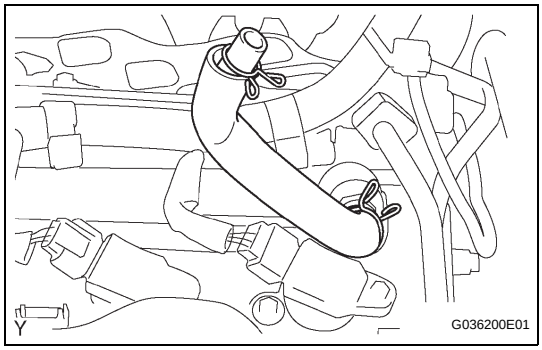

17. INSTALL VENTILATION HOSE

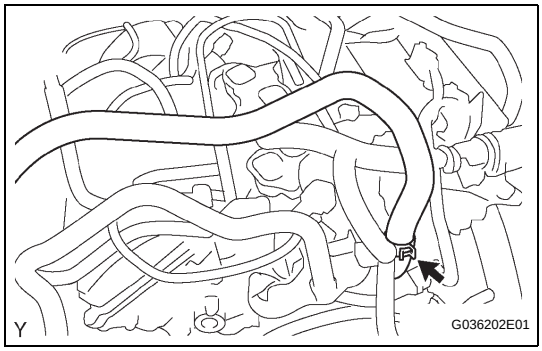

18. INSTALL HEATER OUTLET WATER HOSE

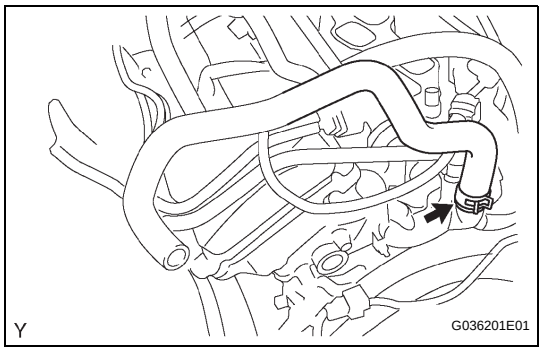

19. INSTALL HEATER INLET WATER HOSE

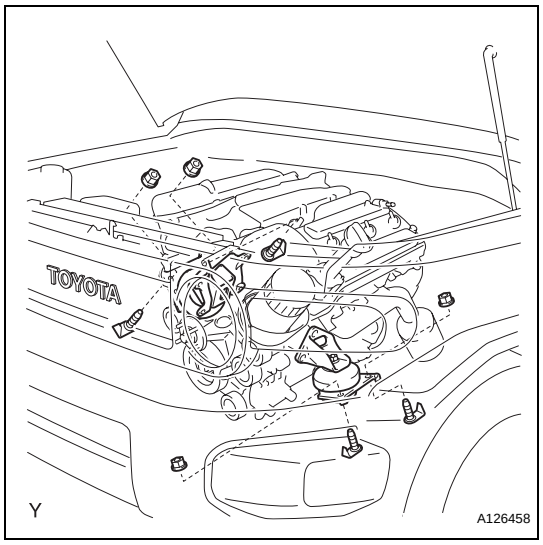

20. INSTALL ENGINE ASSEMBLY

(a) Attach the engine sling device and hang the engine with a chain block.

(b) Lower the engine into the engine compartment carefully.

(c) Attach the engine mounting brackets to the frame brackets.

(d) Install the engine mounting brackets onto the frame brackets with the 4 bolts and 4 nuts.
Torque: 38 N*m (387 kgf*cm, 28 ft.*lbf)

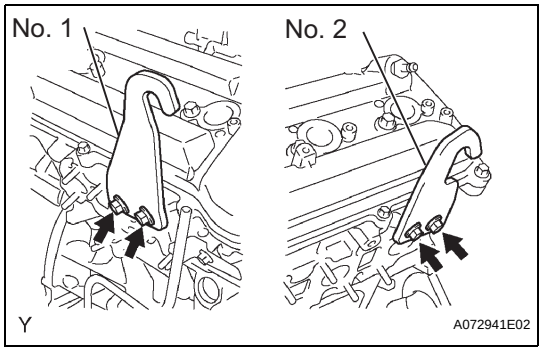

(e) Remove the 4 bolts and 2 engine hangers.

21. INSTALL ENGINE WIRE

(a) Connect the front differential connector (for Automatic Transmission 4WD).

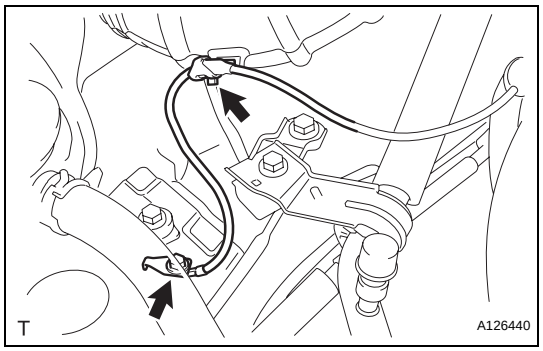

(b) Install the ground wire with the bolt and engage the clamp.
Torque: 8.4 N*m (85 kgf*cm, 74 in.*lbf)

(c) Connect the 2 connectors to the A/C unit.

(d) Connect the 3 connectors to the ECM.

(e) Connect the connector to the four wheel drive ECU (for Automatic Transmission 4WD).

(f) Install the glove compartment door (see page IP-28).

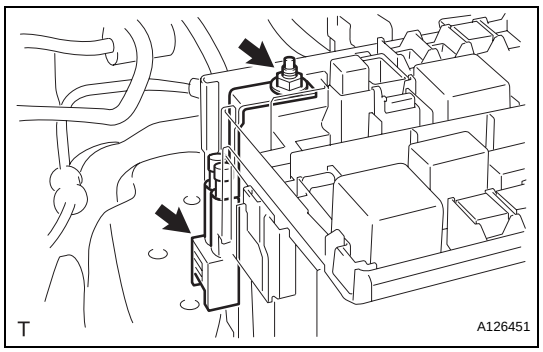

22. INSTALL NO. 2 ENGINE WIRE

(a) Install the engine wire onto the engine room relay block with the nut.
Torque: 10 N*m (102 kgf*cm, 7.4 ft.*lbf)

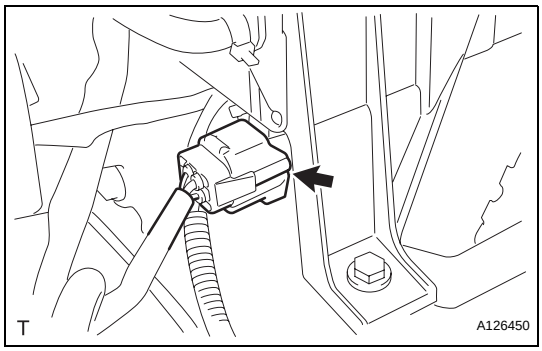

(b) Connect the connector to the engine room relay block.

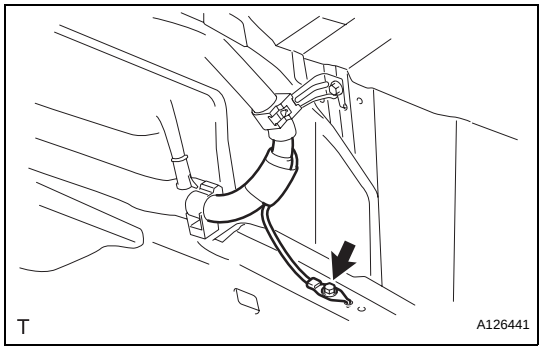

(c) Install the ground wire onto the frame with the bolt.
Torque: 19 N*m (195 kgf*cm, 14 ft.*lbf)

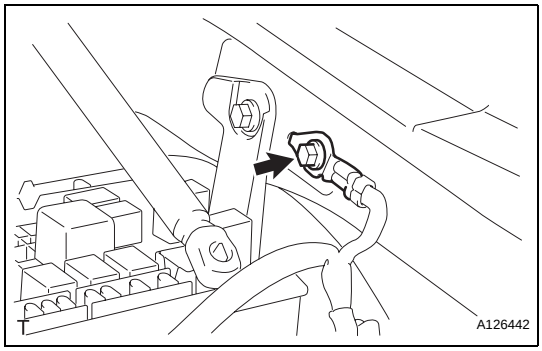

(d) Install the ground wire onto the body with the bolt.
Torque: 8.4 N*m (85 kgf*cm, 7.4 in.*lbf)

23. CONNECT HEATER WATER OUTLET HOSE A (FROM HEATER UNIT)

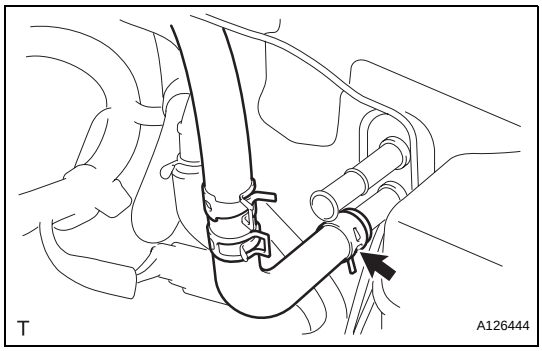

24. CONNECT HEATER INLET WATER HOSE

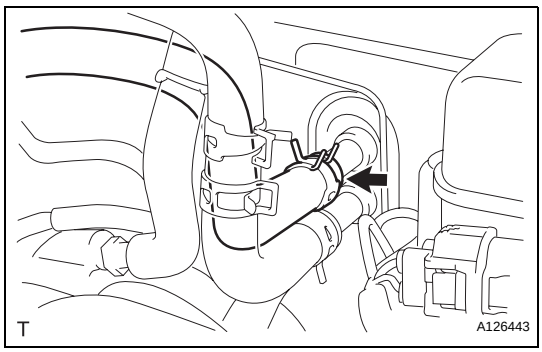

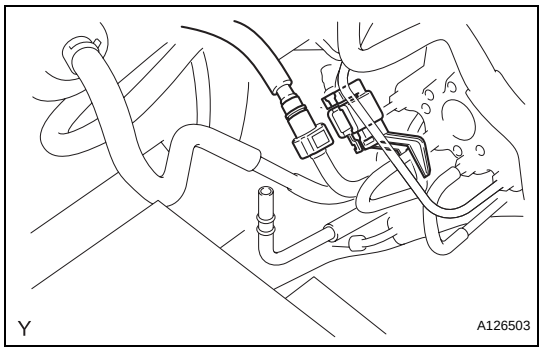

25. **CONNECT NO. 2 FUEL PIPE SUB-ASSEMBLY**
    (a) Connect the No. 2 fuel tube connector and fuel pipe, and install the No. 2 fuel pipe clamp.
    NOTICE:
    Align the fuel tube connector with the pipe, then push the fuel tube connector in until the retainer makes a click sound. If the connection is tight, apply a small amount of engine oil to the tip of the pipe. After connecting, pull the pipe and connector to make sure that they are securely connected.

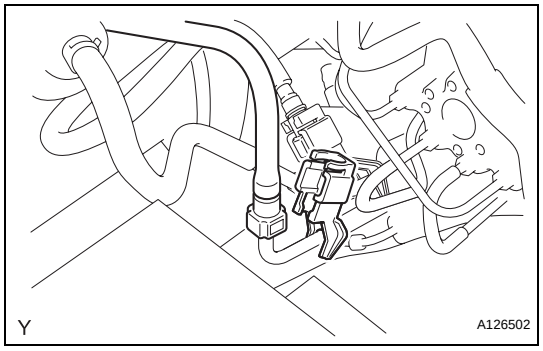

26. **CONNECT NO. 1 FUEL PIPE SUB-ASSEMBLY**
    (a) Connect the No. 1 fuel tube connector and fuel pipe, and install the No. 2 fuel pipe clamp.
    NOTICE:
    Align the fuel tube connector with the pipe, then push the fuel tube connector in until the retainer makes a click sound. If the connection is tight, apply a small amount of engine oil to the tip of the pipe. After connecting, pull the pipe and connector to make sure that they are securely connected.

27. **INSTALL VANE PUMP ASSEMBLY (See page PS-14)**

28. **INSTALL COOLER COMPRESSOR ASSEMBLY (See page ES-421)**

29. **INSTALL GENERATOR ASSEMBLY (See page CH-17)**

30. **INSTALL INTAKE AIR SURGE TANK (See page FU-17)**

31. **INSTALL NO. 2 SURGE TANK STAY (See page FU-19)**

32. **INSTALL NO. 1 SURGE TANK STAY (See page FU-19)**

33. **INSTALL OIL BAFFLE PLATE (See page FU-19)**

34. **INSTALL THROTTLE BODY BRACKET (See page FU-19)**

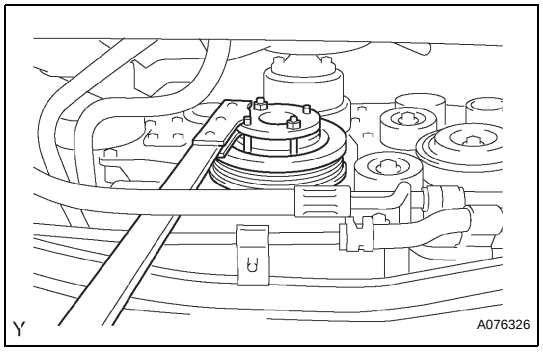

35. **INSTALL FLYWHEEL SUB-ASSEMBLY (for Manual Transmission)**
    (a) Using SST, hold the crankshaft.
    SST 09213-54015 (91651-60855), 09330-00021

EM

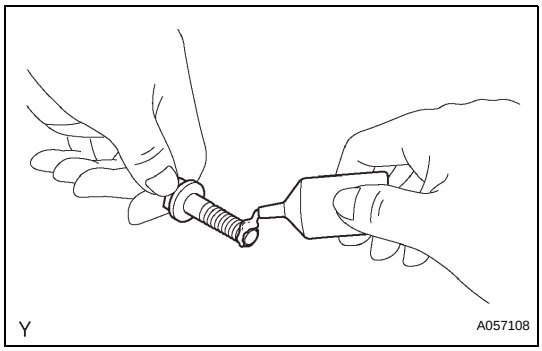

(b) Apply adhesive to the 2 or 3 end threads of the bolts.
Adhesive:
Toyota Genuine Adhesive 1324, Three Bond 1324 or the equivalent.

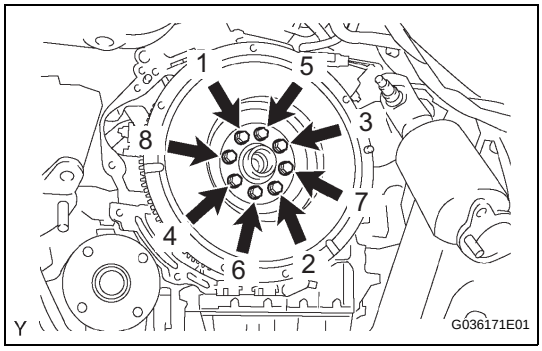

(c) Install the flywheel and 2 spacers onto the crankshaft.
(d) Install the flywheel with the 6 bolts in the order shown in the illustration.
Torque: 83 N*m (846 kgf*cm, 61 ft.*lbf)

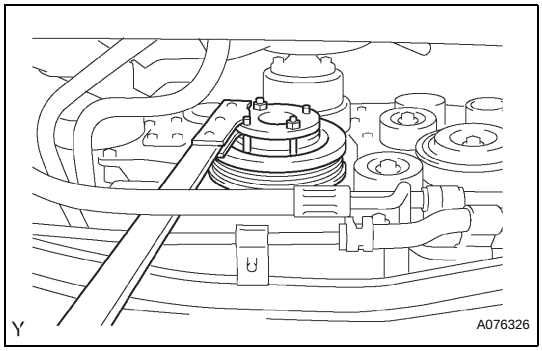

36. INSTALL DRIVE PLATE AND RING GEAR SUB-ASSEMBLY (for Automatic Transmission)
(a) Using SST, hold the crankshaft.
SST 09213-54015 (91651-60855), 09330-00021

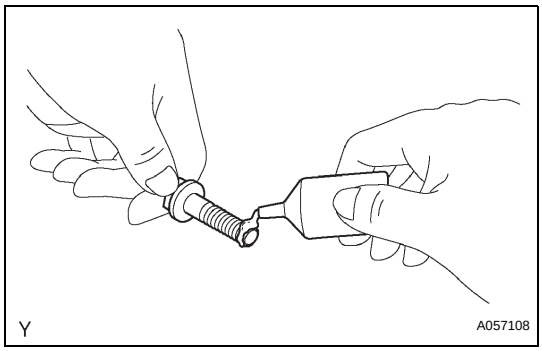

(b) Apply adhesive to the 2 or 3 end threads of the bolts.
Adhesive:
Toyota Genuine Adhesive 1324, Three Bond 1324 or the equivalent.

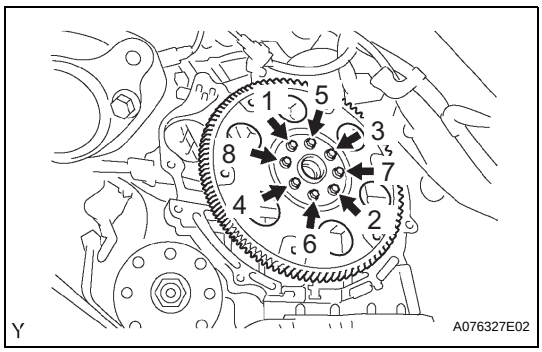

(c) Install the drive plate and 2 spacers onto the crankshaft.
(d) Install the drive plate with the 6 bolts in the order shown in the illustration.
Torque: 83 N*m (846 kgf*cm, 61 ft.*lbf)

37. INSTALL CLUTCH DISC ASSEMBLY (for Manual Transmission)
Refer to the procedures up to "INSTALL CLUTCH DISC ASSEMBLY" (See page CL-23).

38. **INSTALL MANUAL TRANSMISSION UNIT ASSEMBLY (for Manual Transmission)**
Refer to the procedures up to "INSTALL MANUAL TRANSMISSION" (See page MT-11).

39. **INSTALL AUTOMATIC TRANSMISSION ASSEMBLY (for Automatic Transmission)**
Refer to the procedures up to "INSTALL AUTOMATIC TRANSMISSION" (See page AT-175 or AT-181).

40. **INSTALL RADIATOR ASSEMBLY**
Refer to the procedures up to "INSTALL RADIATOR ASSEMBLY" (See page CO-28).

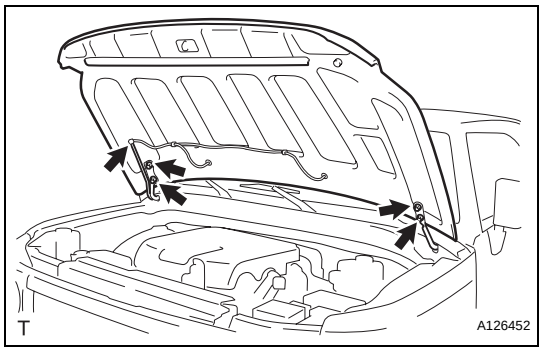

41. **INSTALL HOOD SUB-ASSEMBLY**
(a) Install the hood with the 4 bolts.
(b) Connect the windshield washer hose.

42. **INSTALL HOOD SUPPORT (See page ED-5)**

43. **INSTALL BATTERY**

44. **ADD ENGINE COOLANT (See page CO-3)**

45. **ADD ENGINE OIL (See page LU-5)**

46. **PERFORM INITIALIZATION (for Automatic Transmission)**
(See page AT-19 or AT-19

47. **CHECK FOR ENGINE COOLANT LEAKAGE (See page CO-4)**

48. **CHECK FOR ENGINE OIL LEAKAGE**

49. **CHECK FOR FUEL LEAKAGE**

50. **CHECK FOR EXHAUST GAS LEAKAGE**

51. **INSPECT IGNITION TIMING (See page EM-1)**

52. **INSPECT ENGINE IDLING SPEED (See page EM-2)**

53. **INSPECT COMPRESSION (See page EM-3)**

54. **INSPECT CO/HC (See page EM-3)**

55. **INSPECT AND ADJUST FRONT WHEEL ALIGNMENT**
Refer to the procedures up to "INSPECT AND ADJUST FRONT WHEEL ALIGNMENT" (See page SP-2).

ENGINE UNIT

COMPONENTS

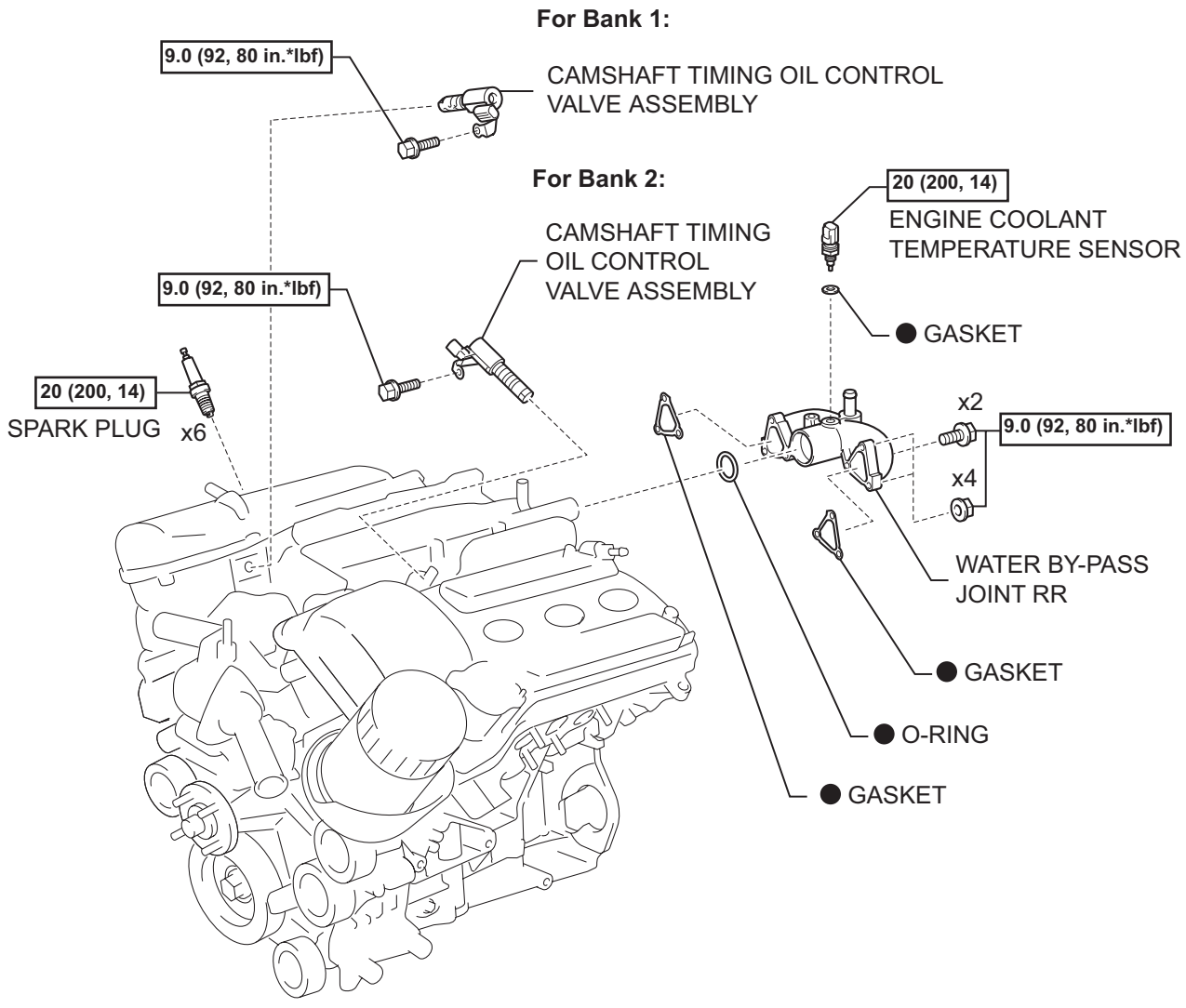

N*m (kgf*cm, ft*lbf) : Specified torque

● Non-reusable part

A126337E01

EM

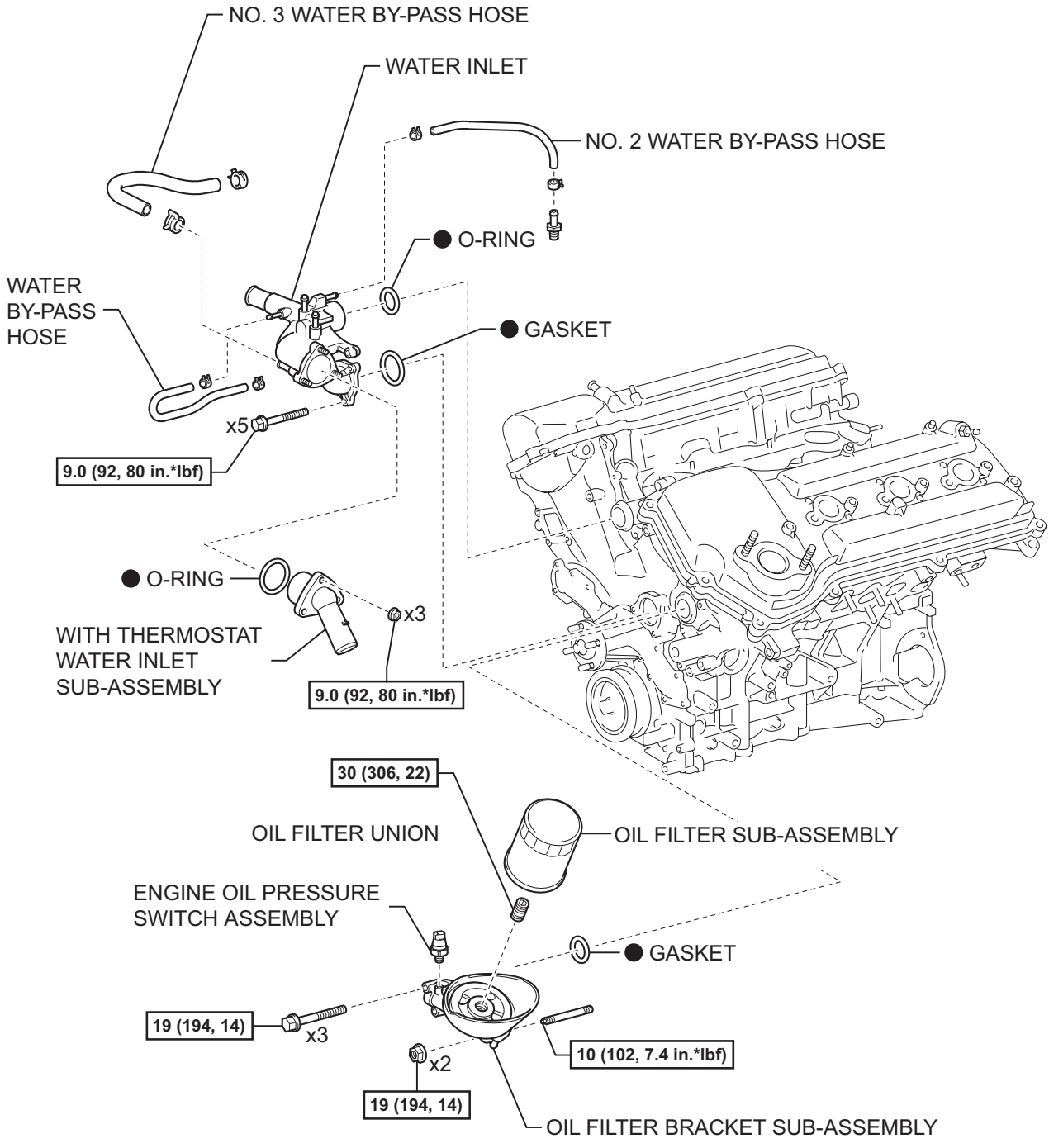

Y N*m (kgf*cm, ft*lbf) : Specified torque

● Non-reusable part

A126336E01

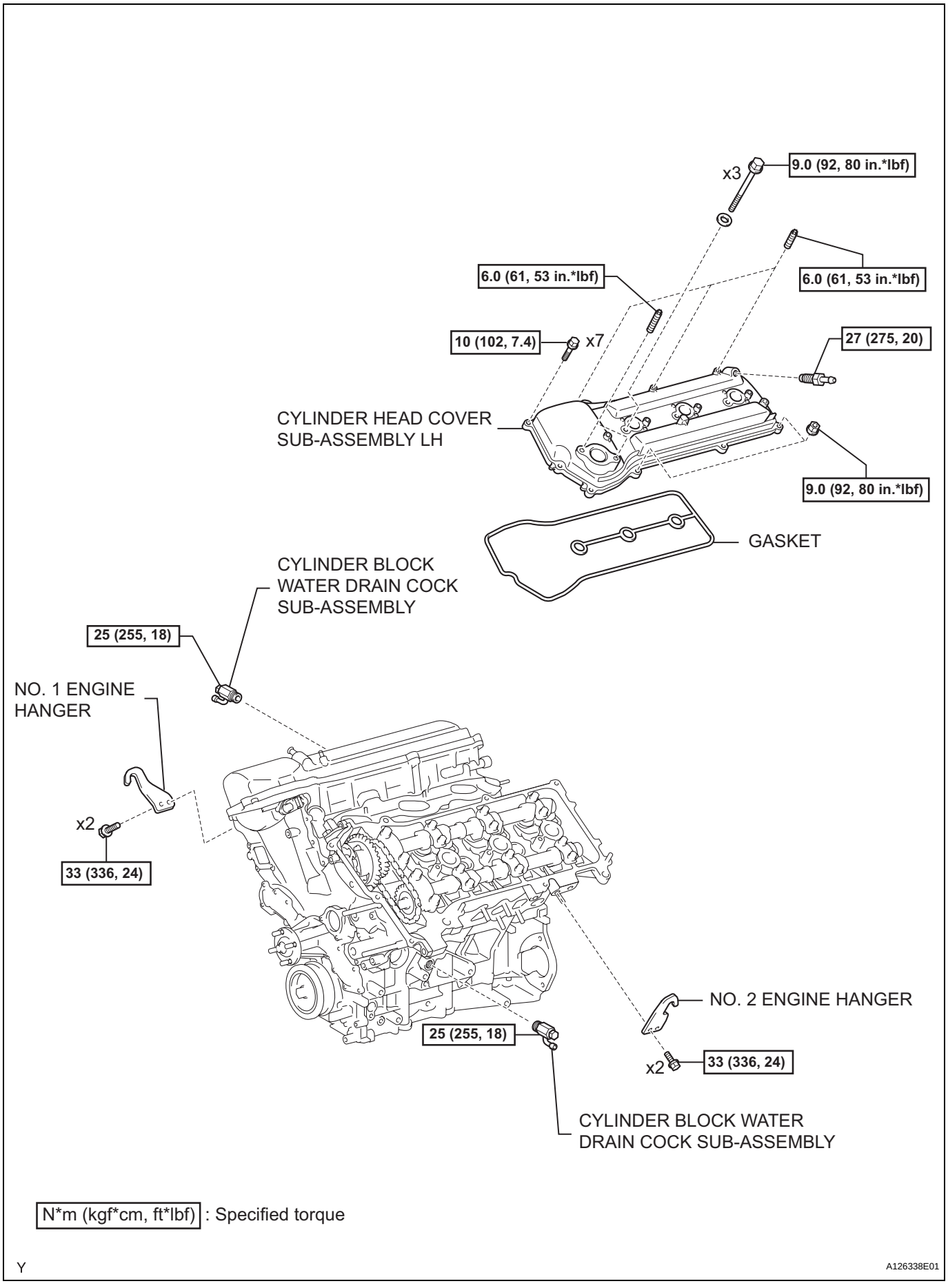

N*m (kgf*cm, ft*lbf) : Specified torque

Y

A126338E01

EM

EM

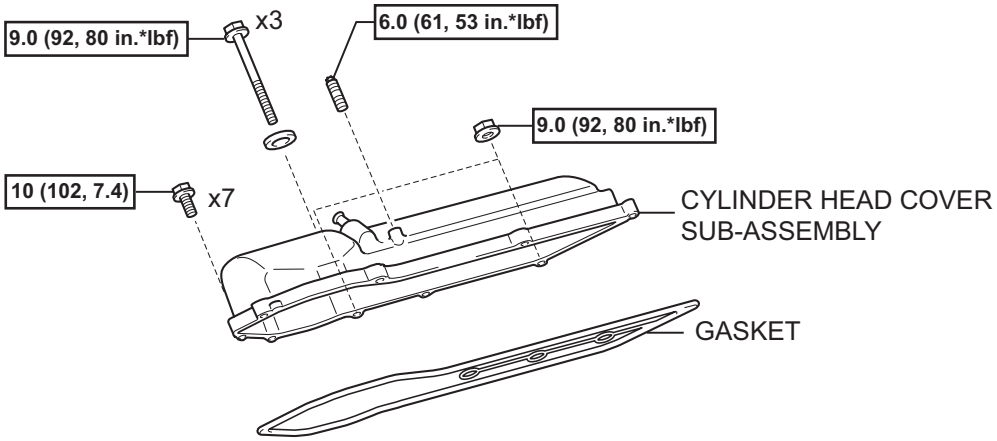

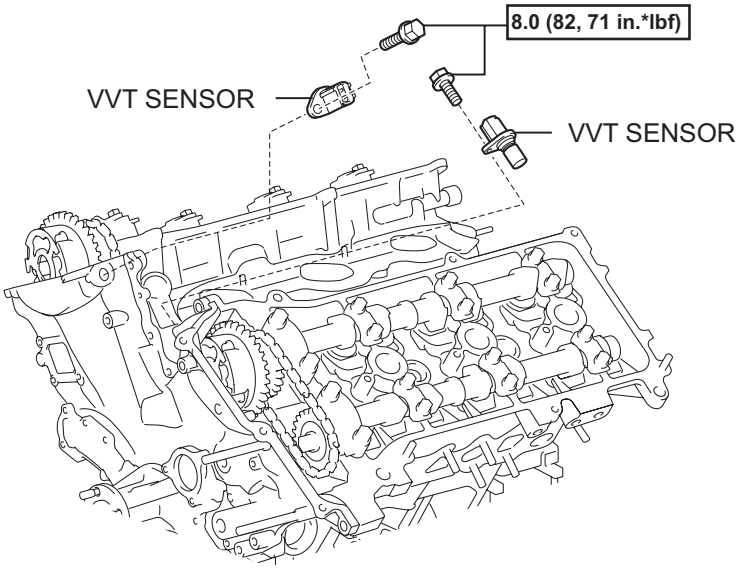

N*m (kgf*cm, ft*lbf) : Specified torque

Y

A126339E01

EM

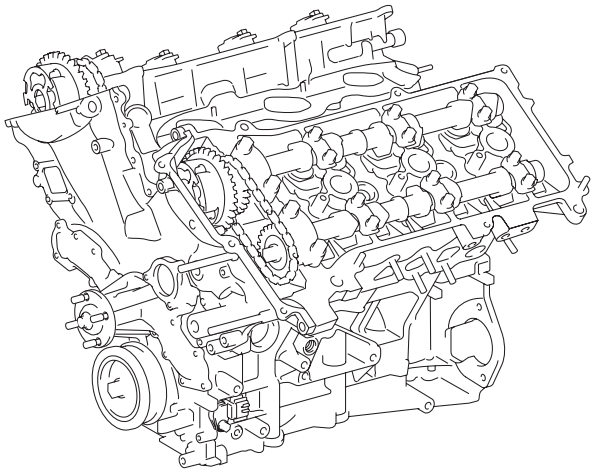

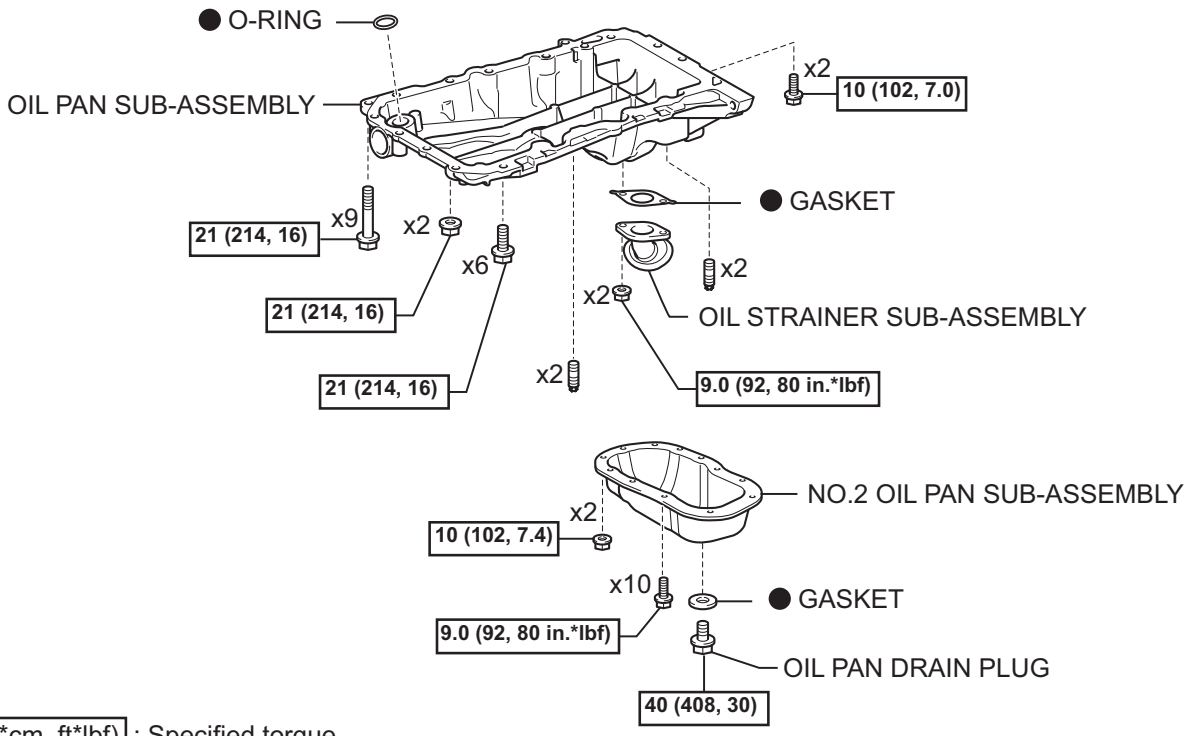

N*m (kgf*cm, ft*lbf) : Specified torque

● Non-reusable part

A126340E01

EM

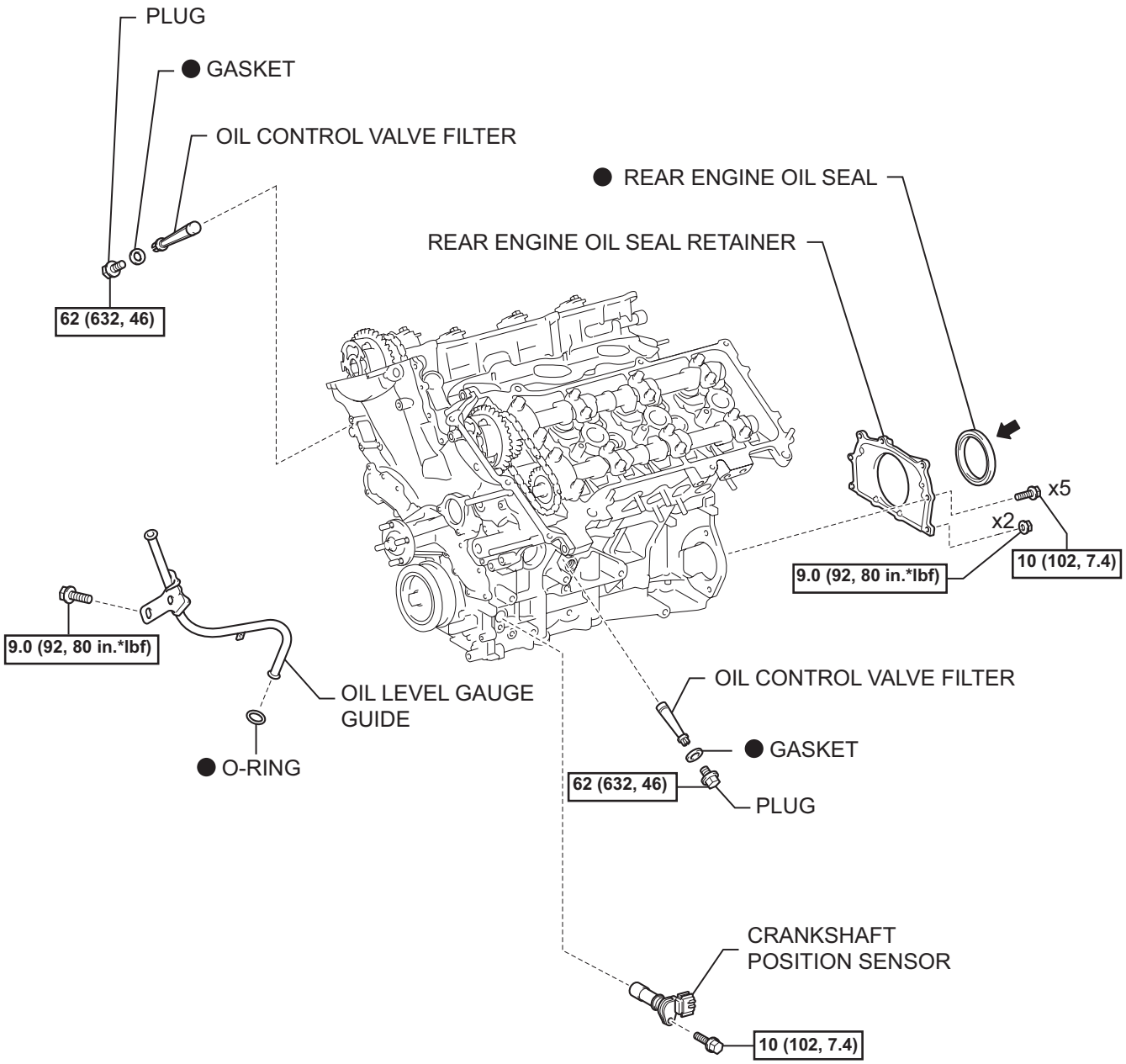

N*m (kgf*cm, ft*lbf) : Specified torque

● Non-reusable part ⬅ Apply MP grease

Y

A126341E01

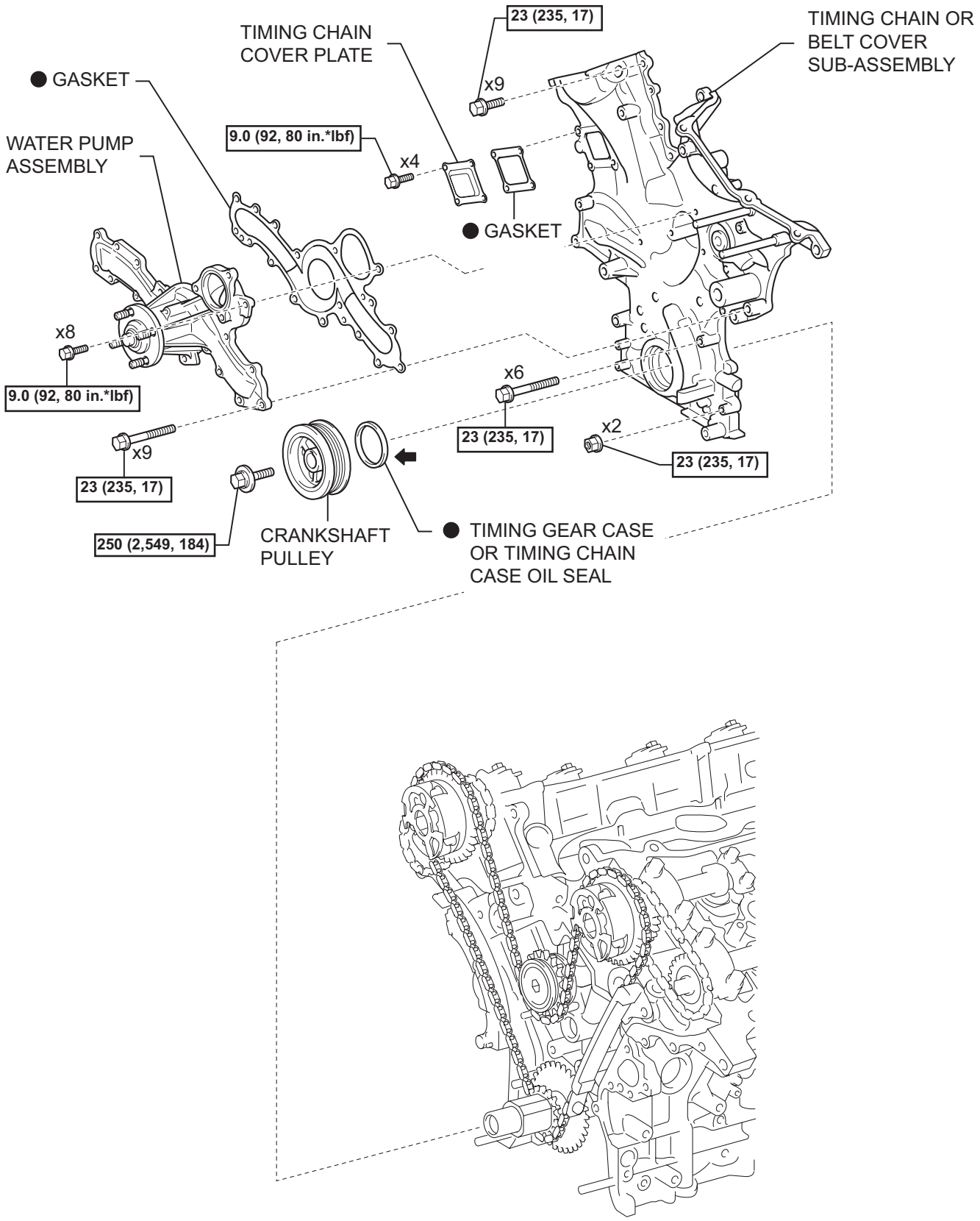

N*m (kgf*cm, ft*lbf) : Specified torque

● Non-reusable part ⬅ Apply MP grease

Y

A126342E01

EM

EM

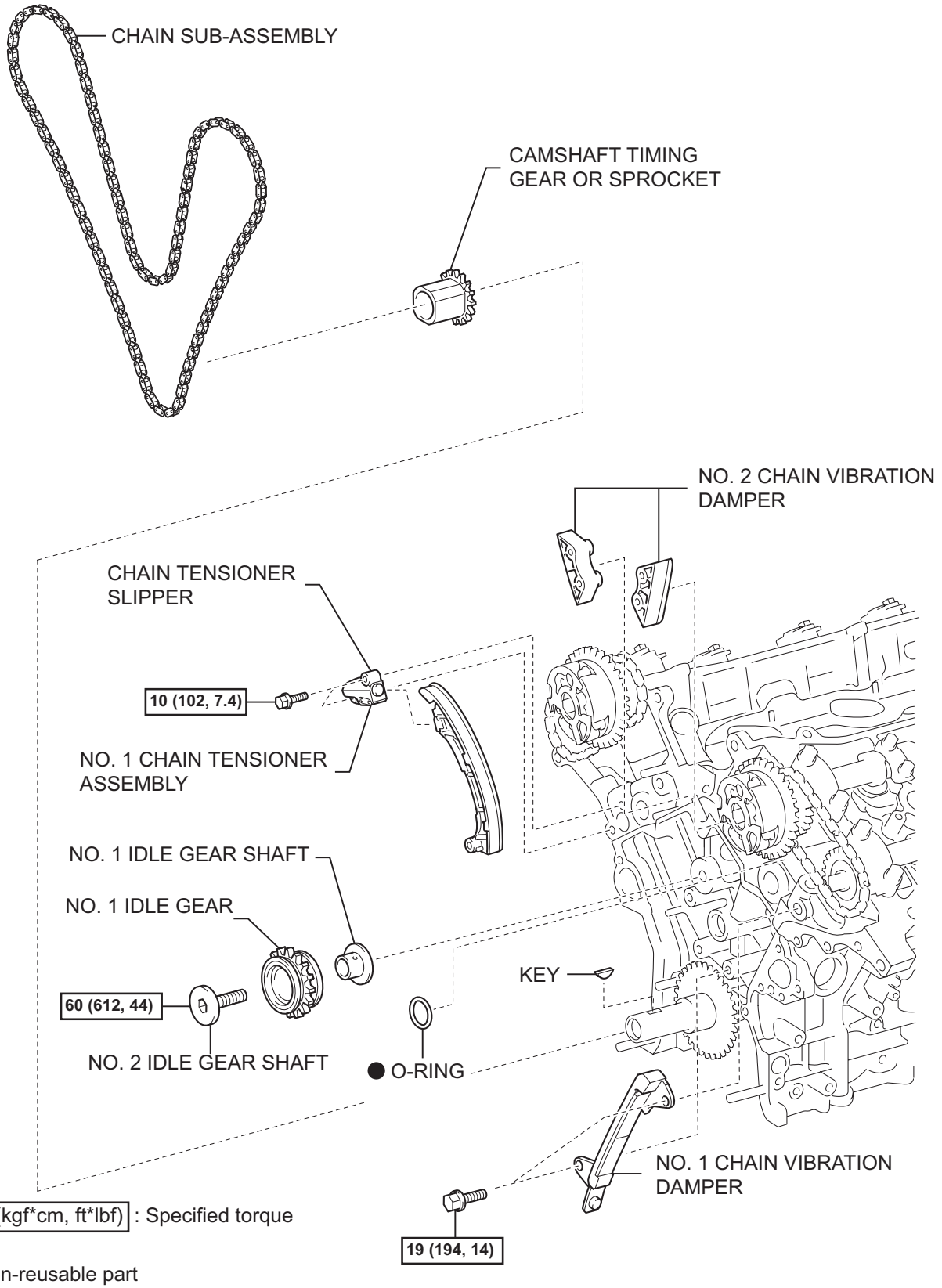

Y

A126343E01

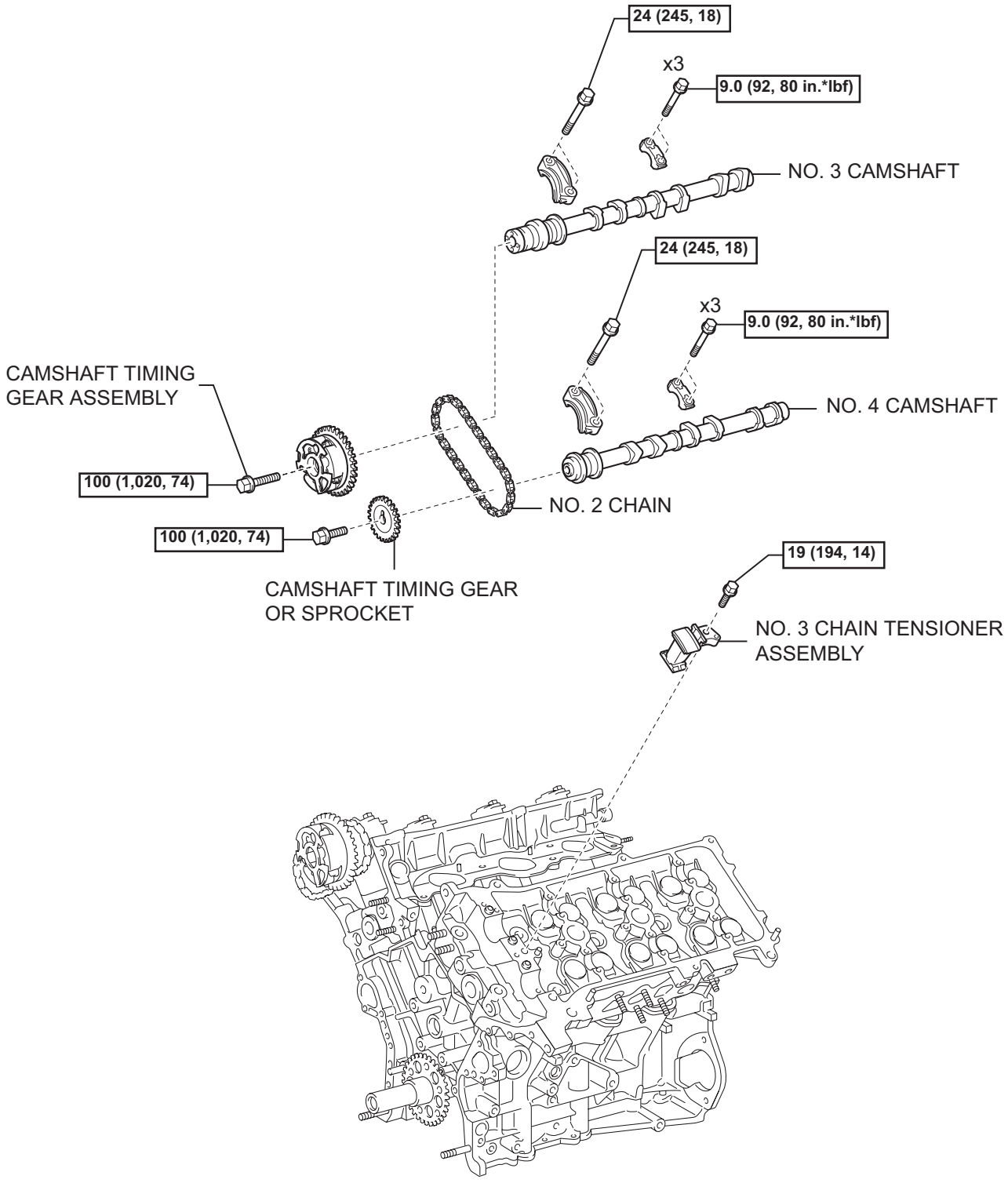

N*m (kgf*cm, ft*lbf) : Specified torque

Y

A126345E01

EM

EM

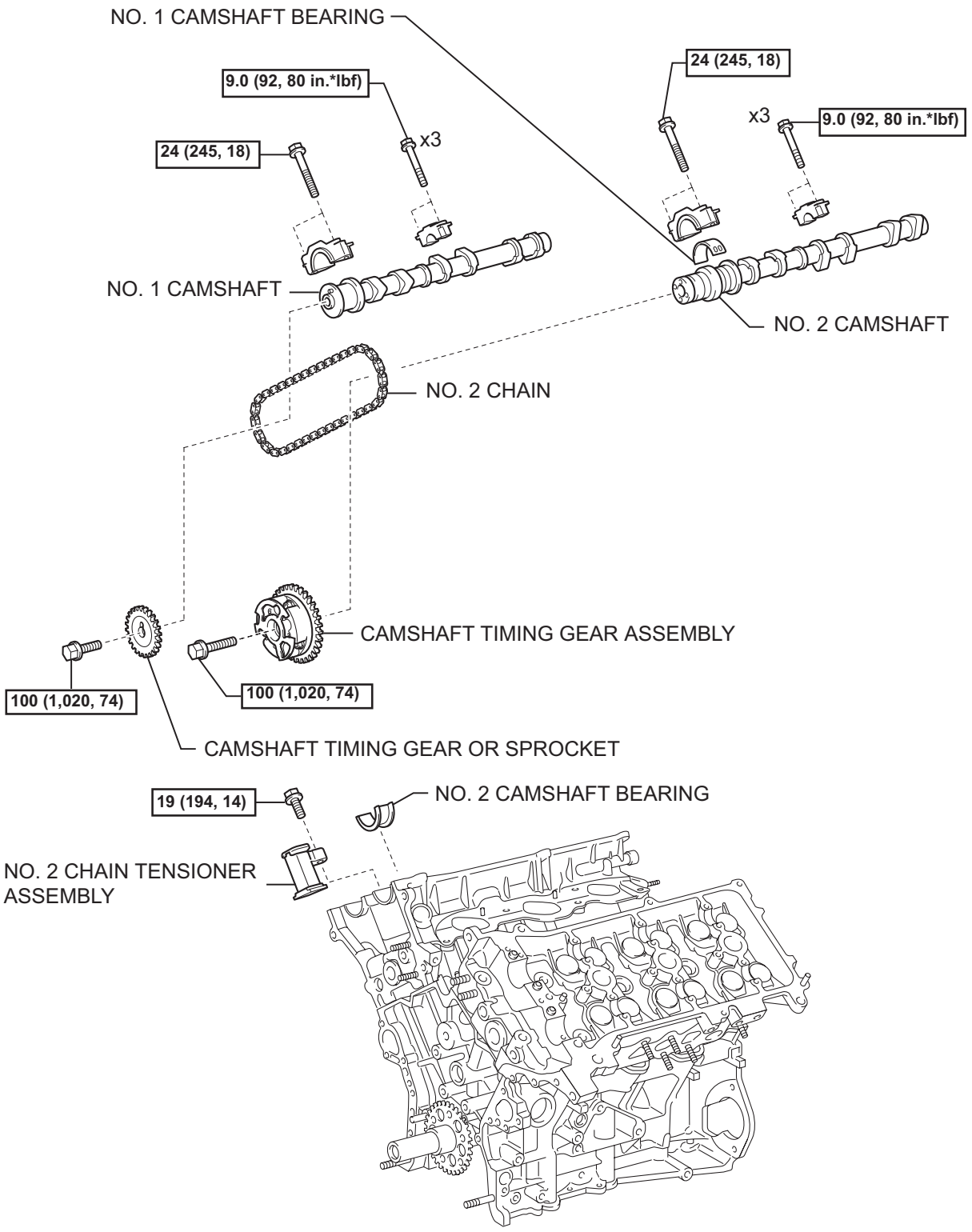

N*m (kgf*cm, ft*lbf) : Specified torque

Y

A126344E01

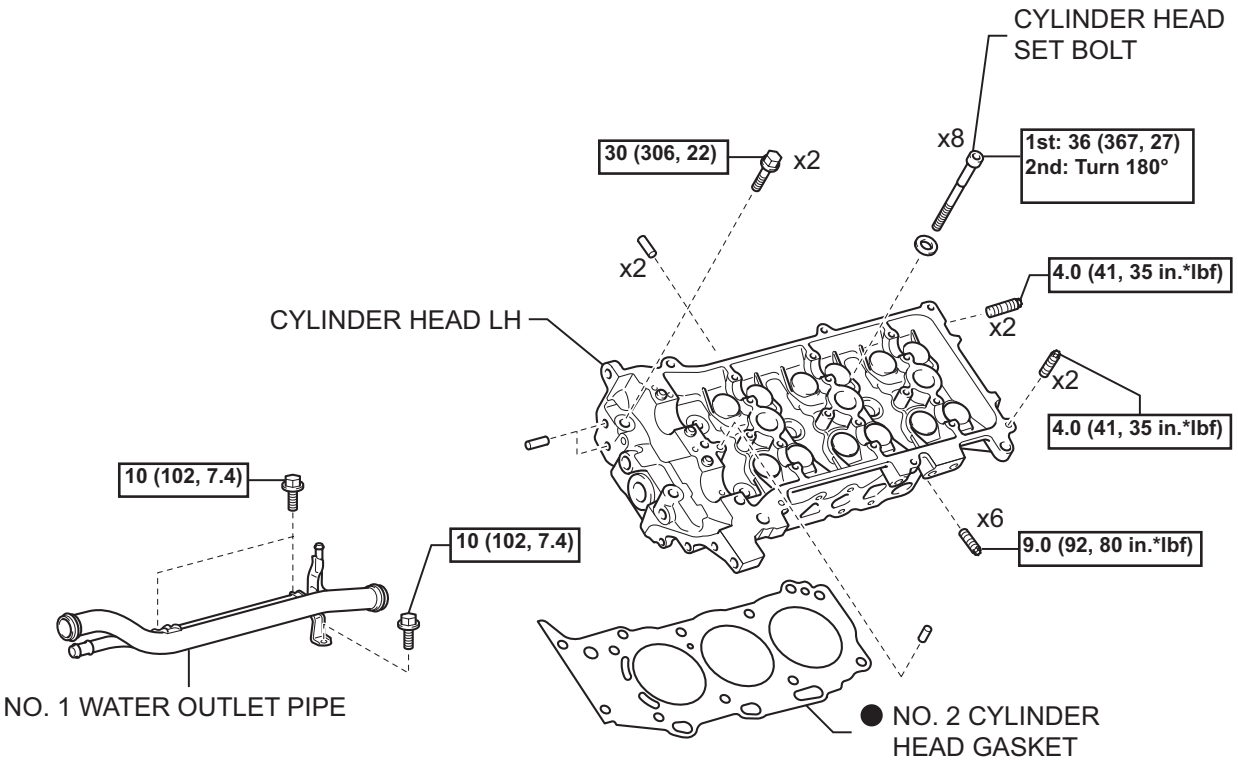

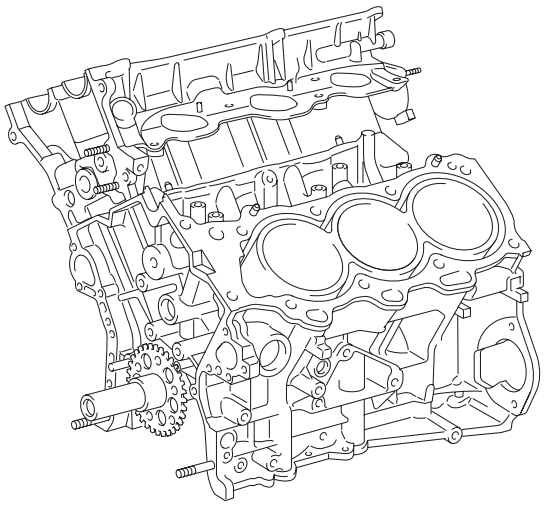

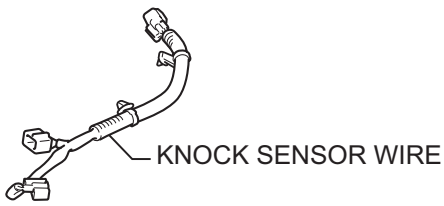

N*m (kgf*cm, ft*lbf) : Specified torque

● Non-reusable part

Y

A126346E01

EM

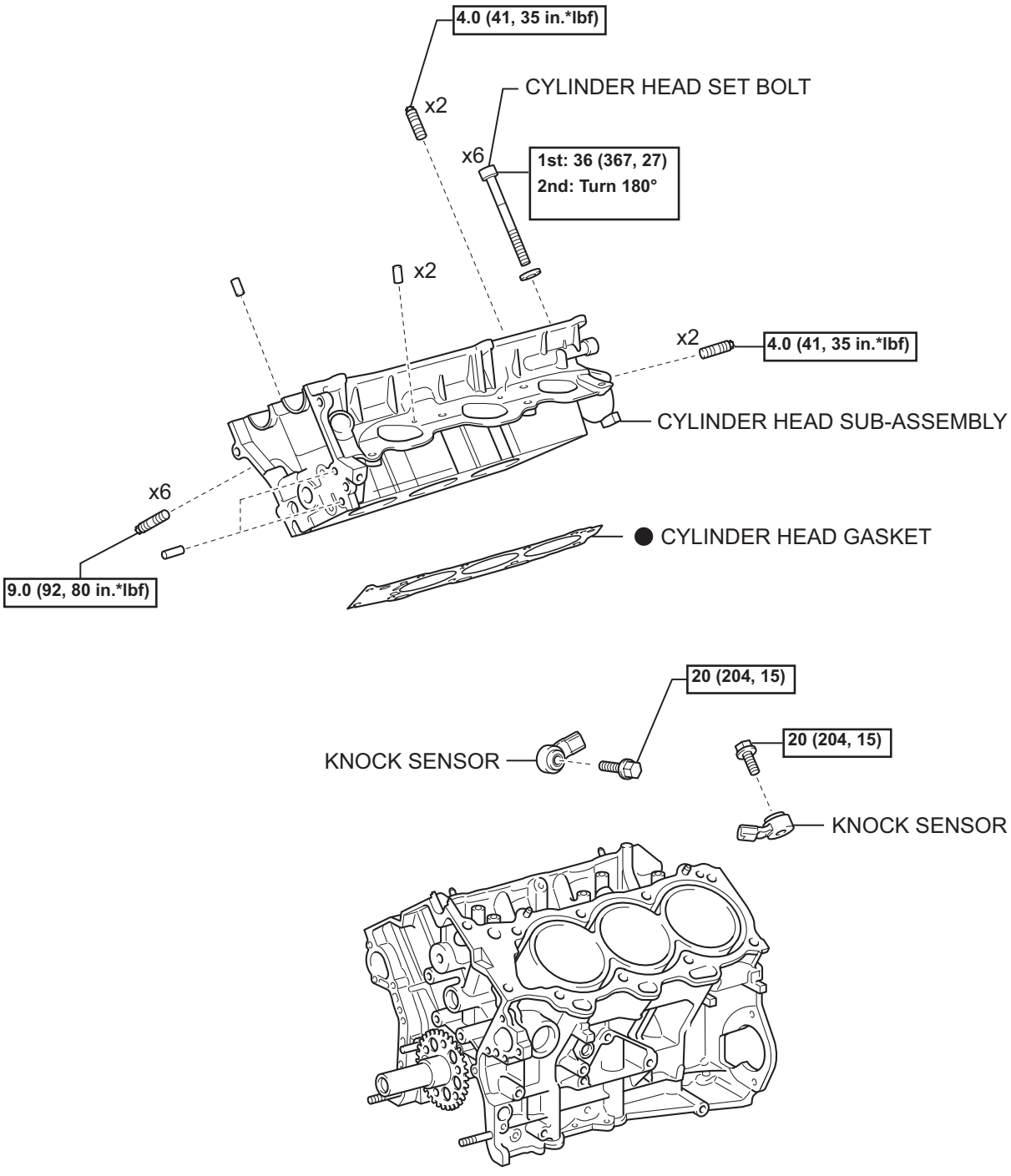

N*m (kgf*cm, ft*lbf) : Specified torque

● Non-reusable part

Y

A126347E01

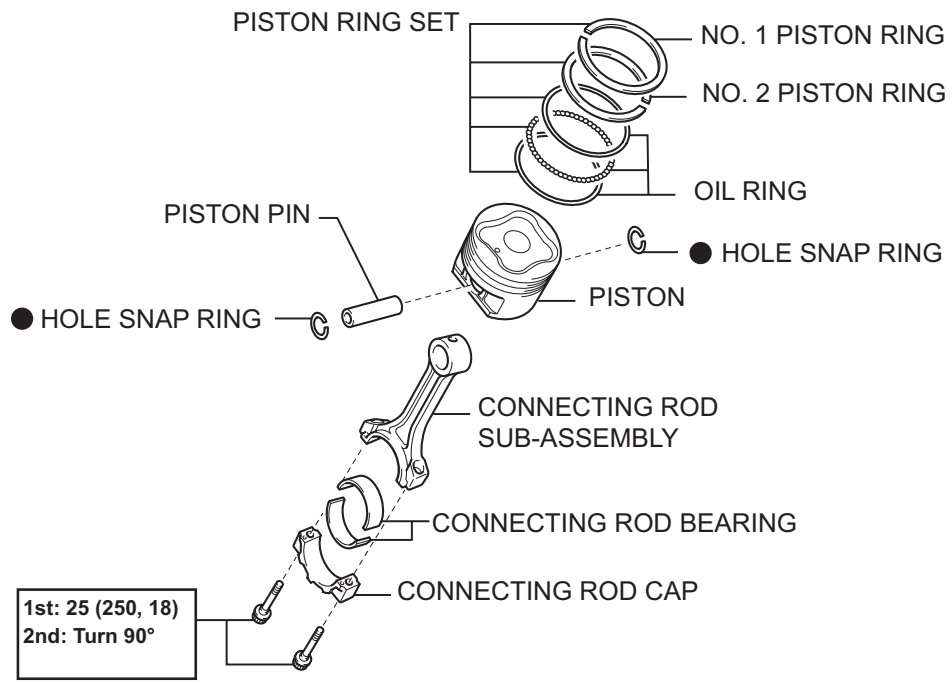

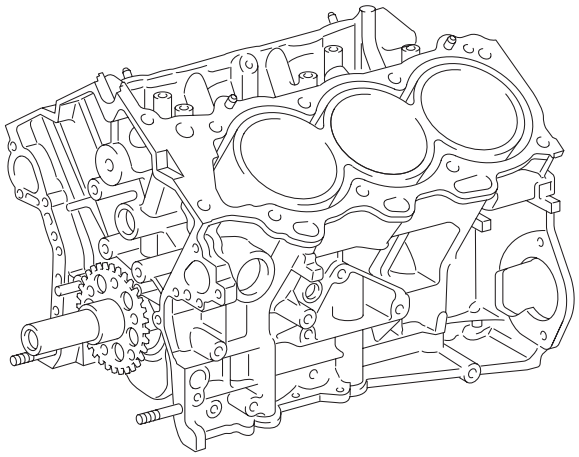

N*m (kgf*cm, ft*lbf) : Specified torque

● Non-reusable part

Y

A126348E01

EM

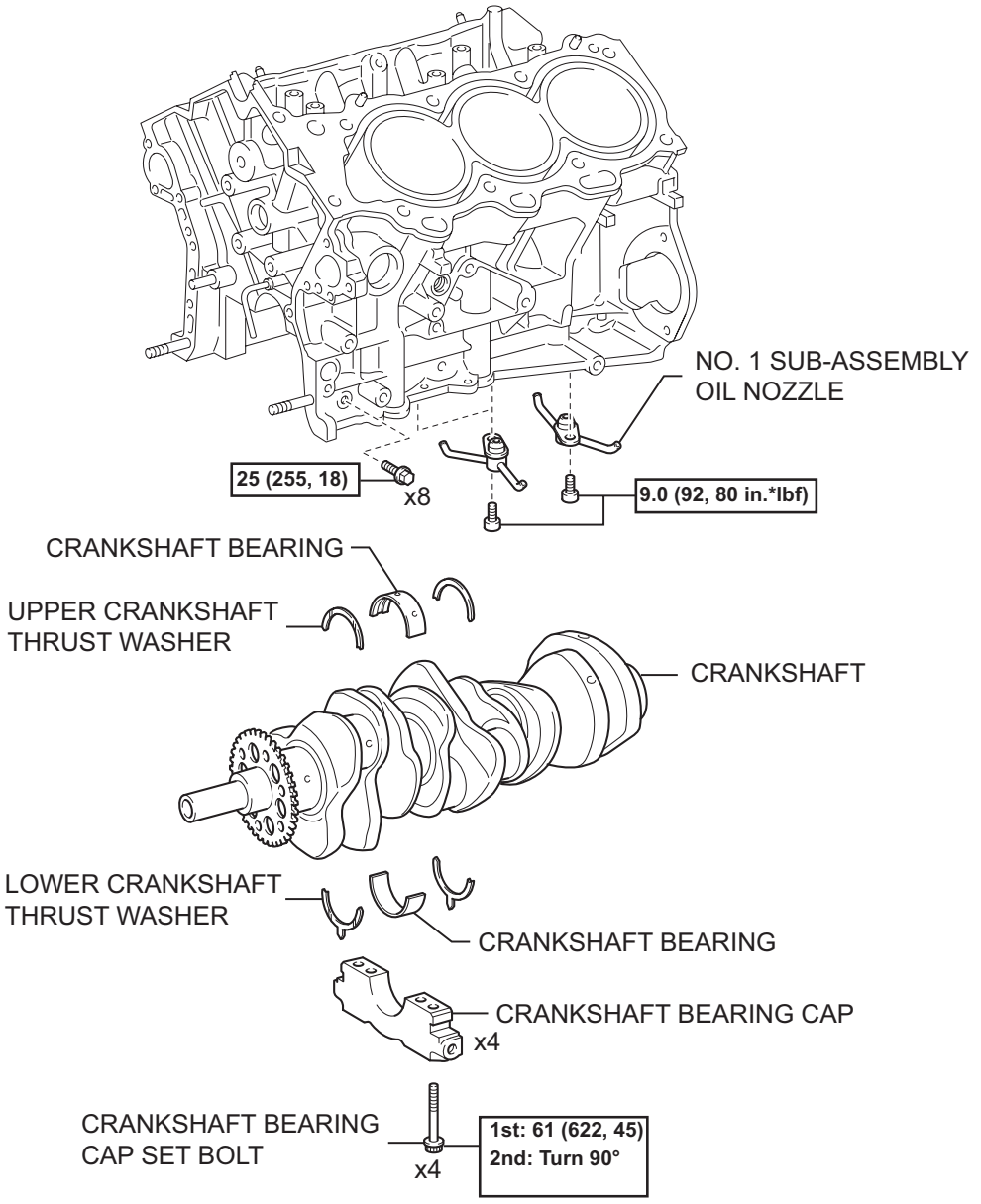

N*m (kgf*cm, ft*lbf) : Specified torque

Y

A126349E01

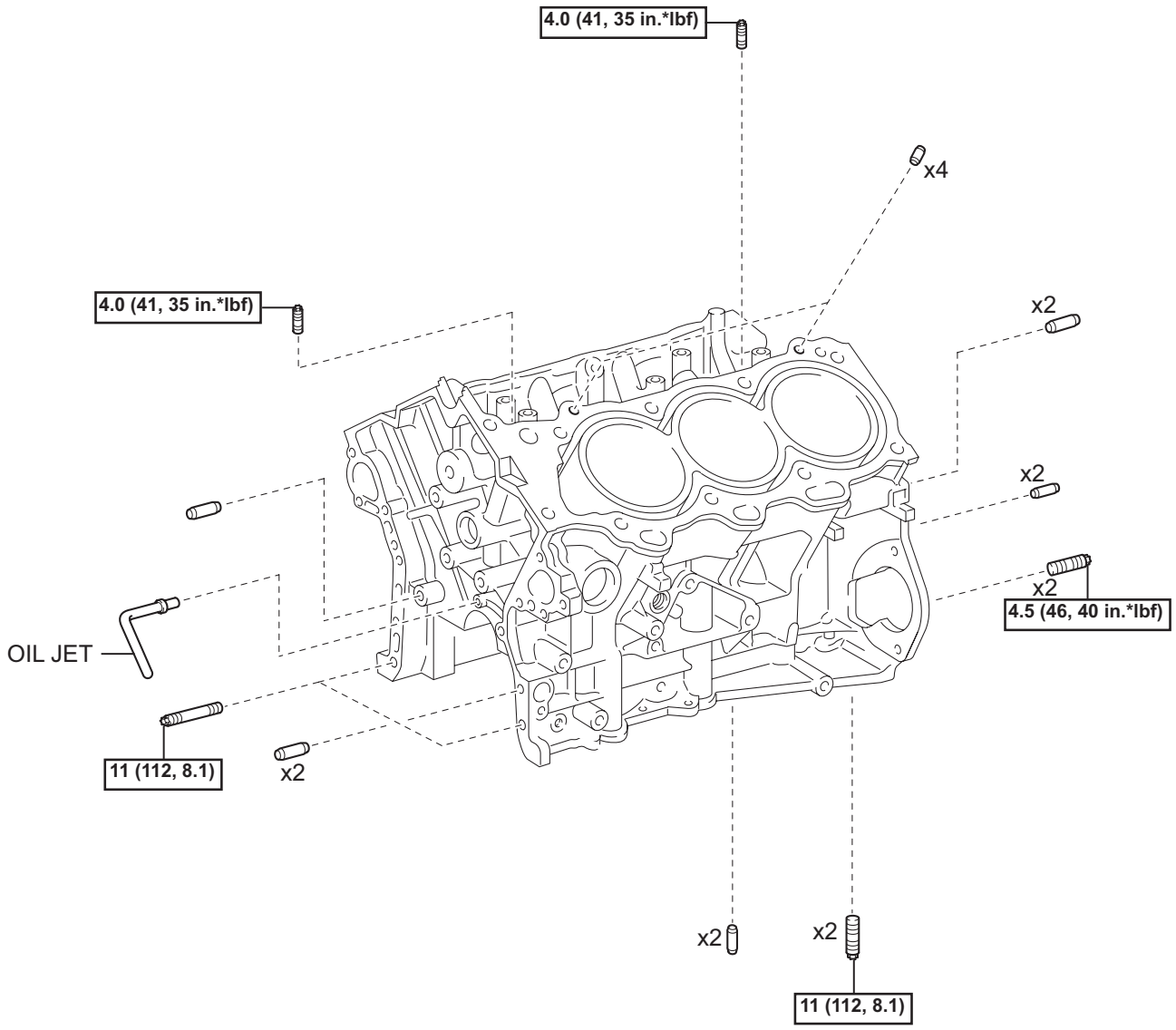

N*m (kgf*cm, ft*lbf) : Specified torque

Y

A126350E01

DISASSEMBLY

HINT:

- Thoroughly clean all the disassembled parts before reassembly.
- Before installing the parts, apply new engine oil to all sliding and rotating surfaces.
- Replace all gaskets, O-rings and oil seals with new parts.

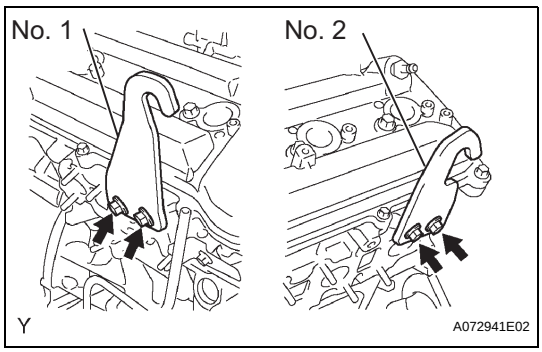

1. REMOVE ENGINE HANGERS

(a) Remove the 2 bolts and No. 1 engine hanger.
(b) Remove the 2 bolts and No. 2 engine hanger.

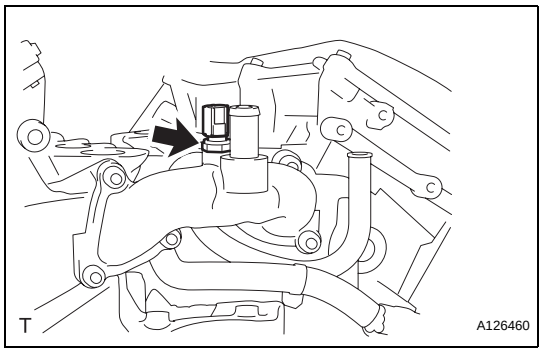

2. REMOVE ENGINE COOLANT TEMPERATURE SENSOR

(a) Remove the engine coolant temperature sensor and gasket.

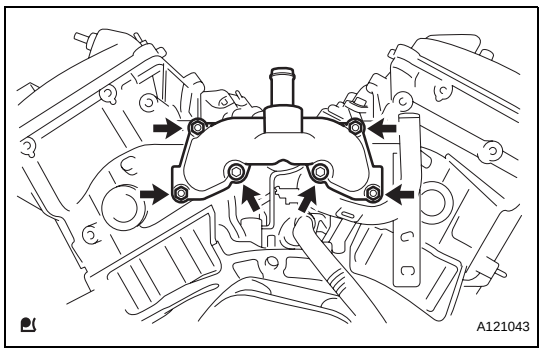

3. REMOVE WATER BY-PASS JOINT RR

(a) Remove the 2 bolts, 4 nuts and the water by-pass rear joint.
(b) Remove the 2 gaskets from the cylinder head.
(c) Remove the O-ring from the outlet pipe.

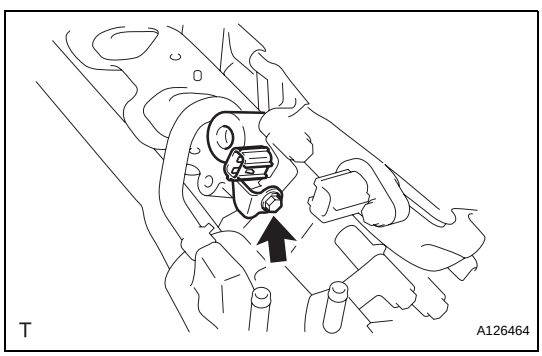

4. REMOVE CAMSHAFT TIMING OIL CONTROL VALVE ASSEMBLY (for Bank 1)

(a) Remove the bolt and camshaft timing oil control valve.

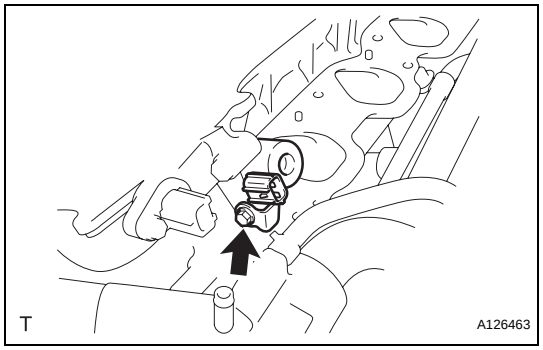

5. REMOVE CAMSHAFT TIMING OIL CONTROL VALVE ASSEMBLY (for Bank 2)

(a) Remove the bolt and camshaft timing oil control valve.

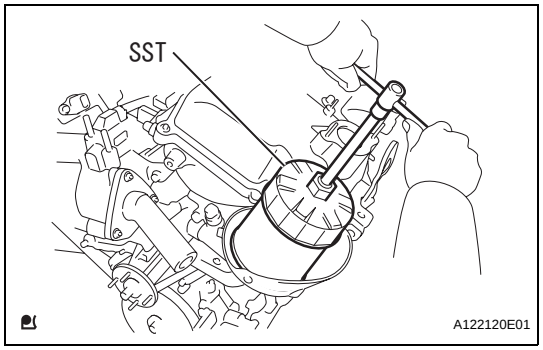

6. REMOVE OIL FILTER SUB-ASSEMBLY

(a) Remove the drain pipe cap.

(b) While removing the oil filter with SST, catch the oil from the oil filter with a container.

SST 09228-07501

(c) Install the drain pipe cap.

7. REMOVE OIL FILTER UNION

(a) Using a 12 mm hexagon wrench, remove the oil filter union.

8. REMOVE ENGINE OIL PRESSURE SWITCH ASSEMBLY

(a) Using a 24 mm deep socket wrench, remove the oil pressure switch.

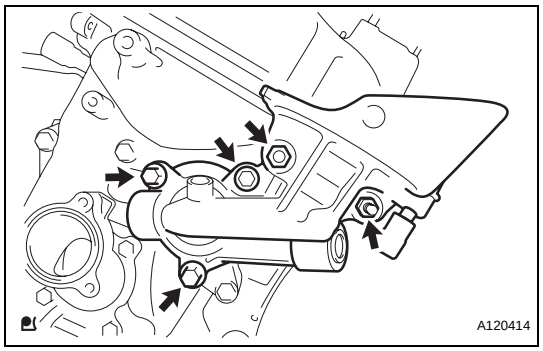

9. REMOVE OIL FILTER BRACKET SUB-ASSEMBLY

(a) Remove the 3 bolts, 2 nuts and the oil filter bracket.

(b) Remove the gasket.

(c) Remove the 2 stud bolts.

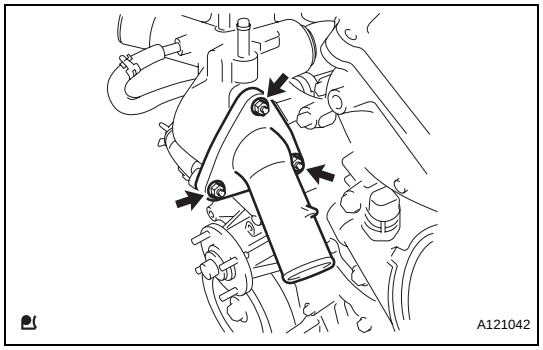

10. REMOVE WITH THERMOSTAT WATER INLET SUB-ASSEMBLY

(a) Remove the 3 nuts and the water inlet with thermostat.

(b) Remove the O-ring.

11. REMOVE NO. 3 WATER BY-PASS HOSE

(a) Loosen the 2 clamps and remove the No. 3 water by-pass hose.

12. REMOVE NO. 2 WATER BY-PASS HOSE

(a) Loosen the 2 clamps and remove the No. 2 water by-pass hose.

13. REMOVE WATER BY-PASS HOSE

(a) Loosen the 2 clamps and remove the water by-pass hose.

EM

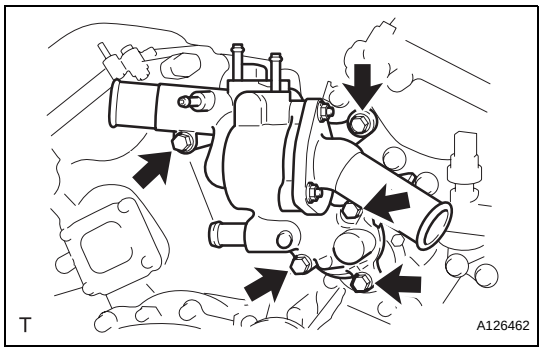

14. REMOVE WATER INLET

(a) Remove the 5 bolts and water inlet.
(b) Remove the O-ring from the outlet pipe.
(c) Remove the gasket.

15. REMOVE SPARK PLUG

(a) Using a spark plug wrench, remove the 6 spark plugs.

16. REMOVE OIL LEVEL GAUGE GUIDE

(a) Remove the bolt, then pull out the oil level gauge guide.
(b) Remove the O-ring from the oil level gauge guide.

17. REMOVE CYLINDER BLOCK WATER DRAIN COCK SUB-ASSEMBLY

(a) Remove the 2 water drain cocks.

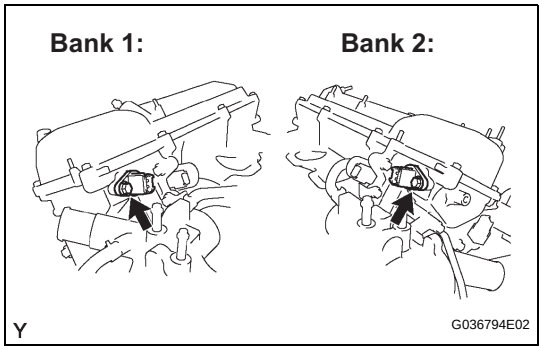

18. REMOVE VVT SENSOR

(a) Remove the 2 bolts, then remove the 2 VVT sensors.

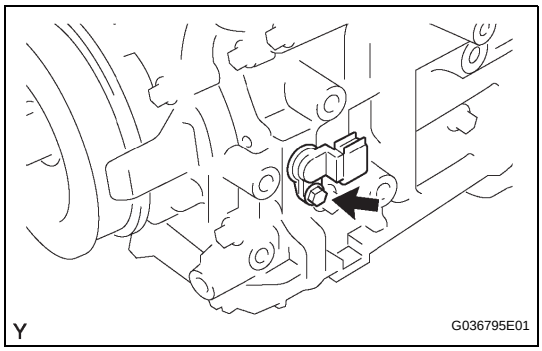

19. REMOVE CRANKSHAFT POSITION SENSOR

(a) Remove the bolt, then remove the crankshaft position sensor.

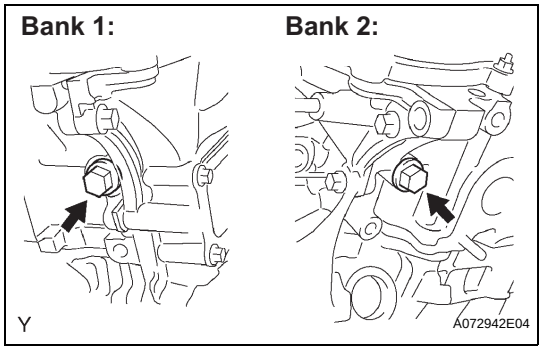

20. REMOVE OIL CONTROL VALVE FILTER

(a) Remove the plug and filter, then remove the gasket from each cylinder head.

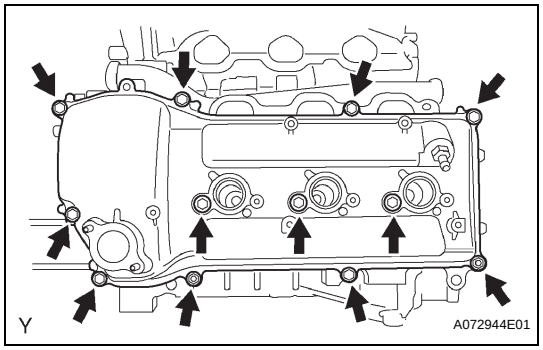

21. REMOVE CYLINDER HEAD COVER SUB-ASSEMBLY LH

(a) Remove the 10 bolts, 3 seal washers and 2 nuts, then remove the cylinder head cover.
(b) Remove the gasket from the cylinder head cover.
(c) Remove the ventilation valve from the cylinder head cover.

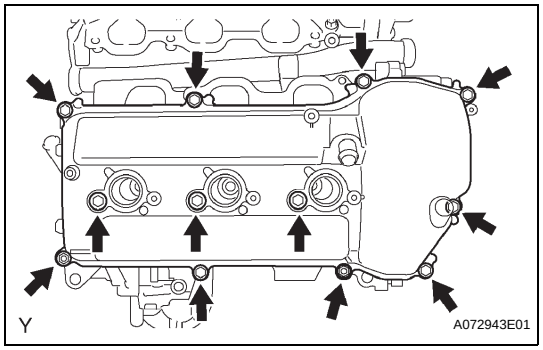

22. REMOVE CYLINDER HEAD COVER SUB-ASSEMBLY

(a) Remove the 10 bolts, 3 seal washers and 2 nuts, then remove the cylinder head cover.
(b) Remove the gasket from the cylinder head cover.

EM

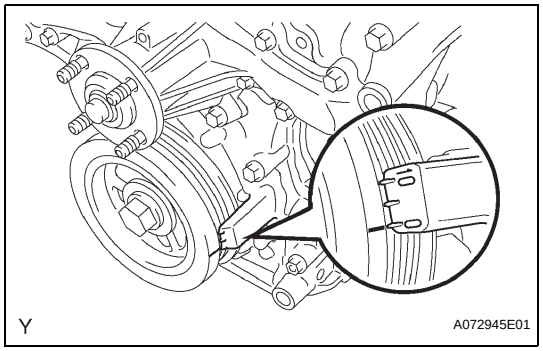

23. REMOVE CRANKSHAFT PULLEY

(a) Turn the crankshaft pulley until its groove and the "0" timing mark of the timing chain cover are aligned.

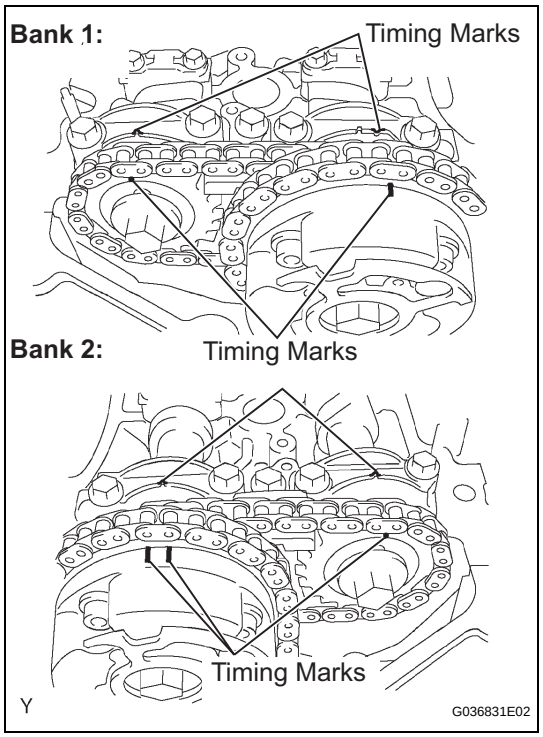

(b) Check that the timing marks of the camshaft timing gears are aligned with the timing marks located on the No. 1 and No. 2 bearing caps as shown in the illustration.
If not, turn the crankshaft 1 complete revolution (360°) and align the timing marks as above.

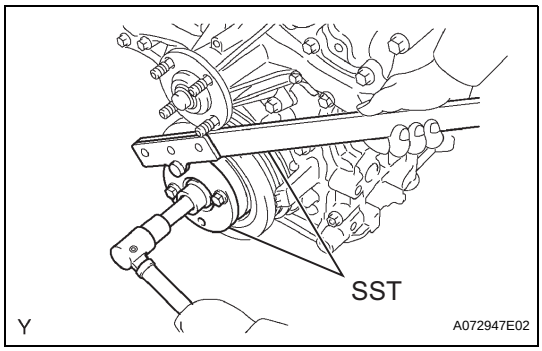

(c) Using SST, fix the pulley and loosen the pulley bolt.
SST 09213-54015 (91651-60855), 09330-00021

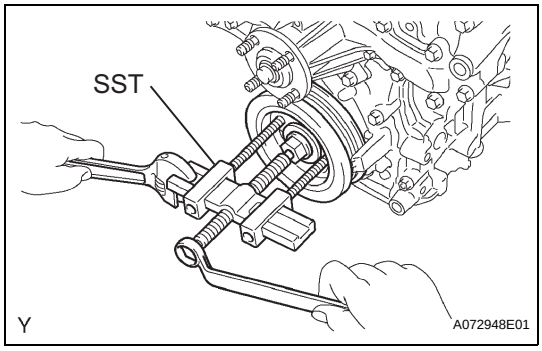

(d) Using the pulley set bolt and SST, remove the crankshaft pulley.
SST 09950-50013 (09951-05010, 09952-05010, 09953-05020, 09954-05030)

24. REMOVE OIL PAN DRAIN PLUG

(a) Remove the drain plug and gasket.

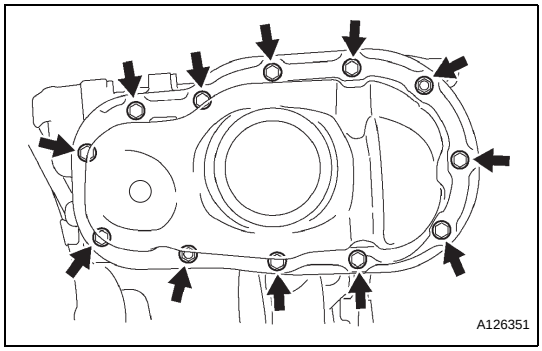

25. REMOVE NO. 2 OIL PAN SUB-ASSEMBLY

(a) Remove the 10 bolts and 2 nuts.

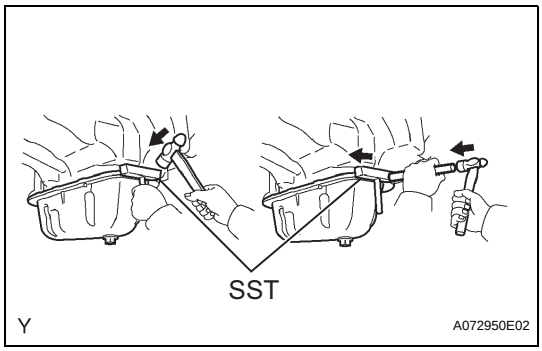

(b) Insert the blade of SST between the oil pan and oil pan No. 2, then cut off applied sealer and remove oil pan No. 2.
SST 09032-00100
NOTICE:
- **Be careful not to damage the contact surface of the oil pan and oil pan No. 2.**
- **Be careful not to damage the oil pan No. 2 flange.**

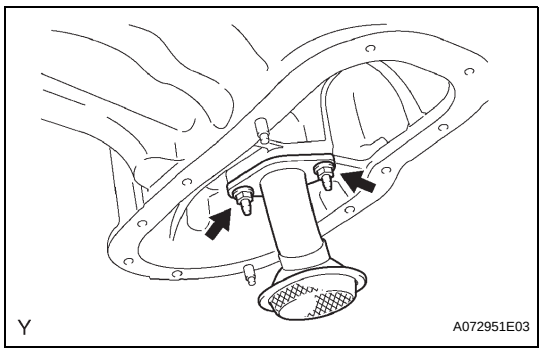

26. REMOVE OIL STRAINER SUB-ASSEMBLY

(a) Remove the 2 nuts, then remove the oil strainer and gasket.

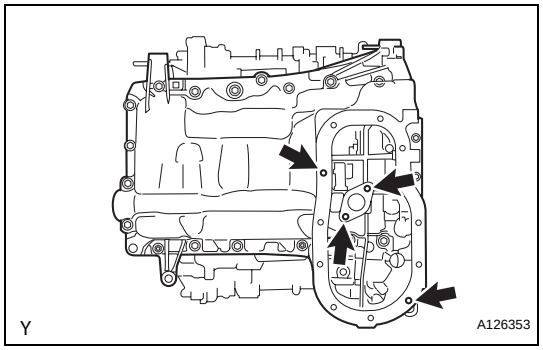

27. REMOVE OIL PAN SUB-ASSEMBLY

(a) Remove the 4 stud bolts from the oil pan.

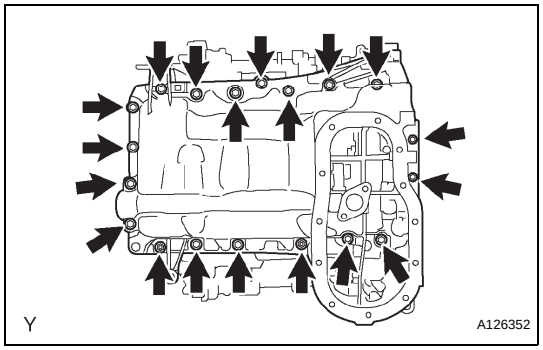

(b) Remove the 17 bolts and 2 nuts.

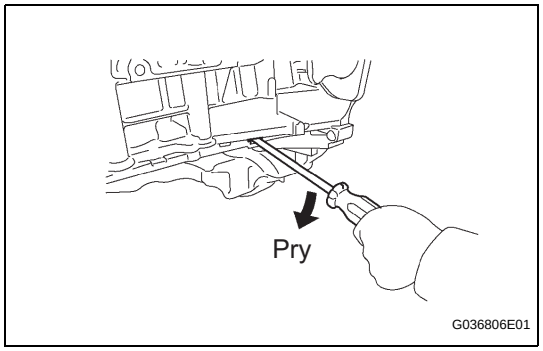

(c) Using a screwdriver, remove the oil pan by prying between the oil pan and cylinder block in the sequence shown.

NOTICE:

Be careful not to damage the contact surfaces of the cylinder block and oil pan.

(d) Remove the O-ring from the oil pump.

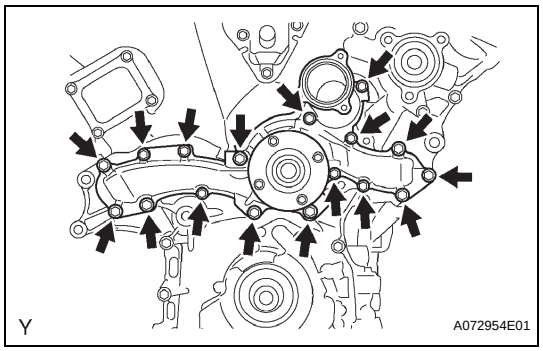

28. REMOVE WATER PUMP ASSEMBLY

(a) Remove the 17 bolts, then remove the water pump and gasket.

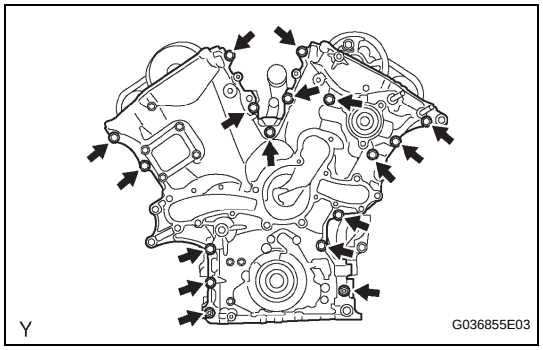

29. REMOVE TIMING CHAIN OR BELT COVER SUB-ASSEMBLY

(a) Remove the 15 bolts and 2 nuts.

EM

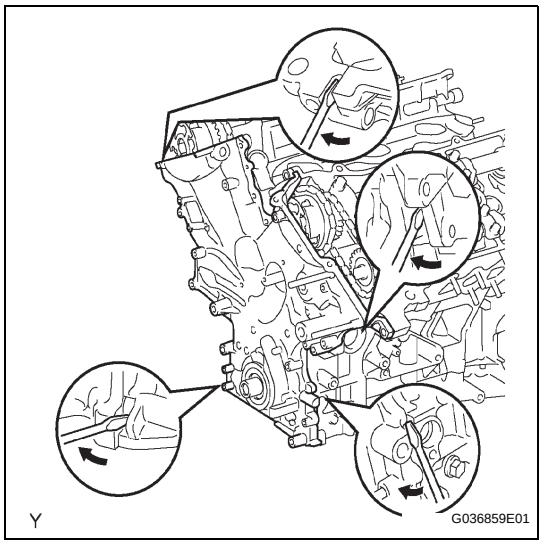

(b) Remove the timing chain cover by prying between the timing chain cover, cylinder head and cylinder block with a screwdriver.
NOTICE:
Be careful not to damage the contact surfaces of the timing chain cover, cylinder block and cylinder head.
(c) Remove the 4 bolts and timing chain cover plate.
(d) Remove the O-ring from the cylinder head LH.

30. REMOVE NO. 1 CHAIN TENSIONER ASSEMBLY
NOTICE:
- **Never rotate the crankshaft with the chain tensioner removed.**
- **When rotating the camshaft with the timing chain removed, rotate the crankshaft counterclockwise 40° from the TDC first.**

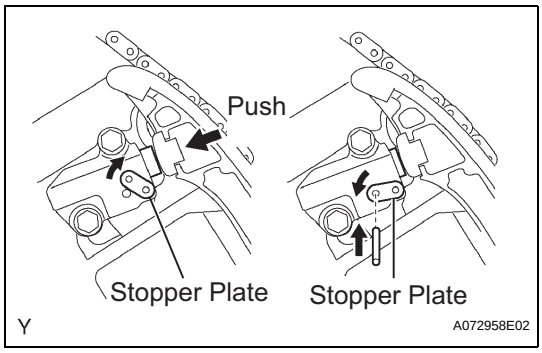

(a) While turning the stopper plate of the tensioner upward, push in the plunger of the chain tensioner as shown in the illustration.
(b) While turning the stopper plate of the tensioner downward, insert a bar of ϕ 3.5 mm (0.138 in.) into the holes in the stopper plate and tensioner to fix the stopper plate.
(c) Remove the 2 bolts, then remove the chain tensioner.

31. REMOVE CHAIN TENSIONER SLIPPER

32. REMOVE IDLE SPROCKET ASSEMBLY
(a) Using a 10 mm hexagon wrench, remove the No. 2 idle gear shaft, No. 1 idle gear and No. 1 idle gear shaft.

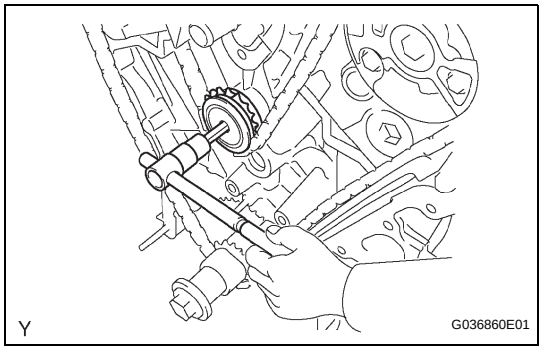

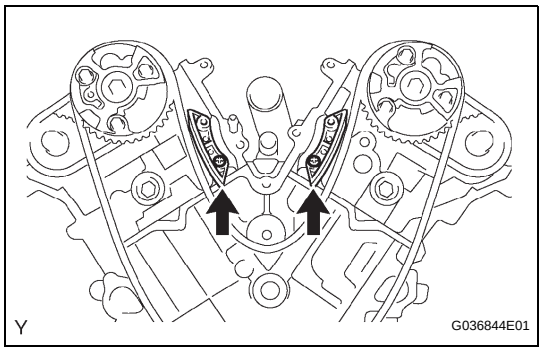

33. REMOVE NO. 2 CHAIN VIBRATION DAMPER
(a) Remove the 2 No. 2 chain vibration dampers.

34. REMOVE CHAIN SUB-ASSEMBLY

35. REMOVE CRANKSHAFT TIMING GEAR OR SPROCKET

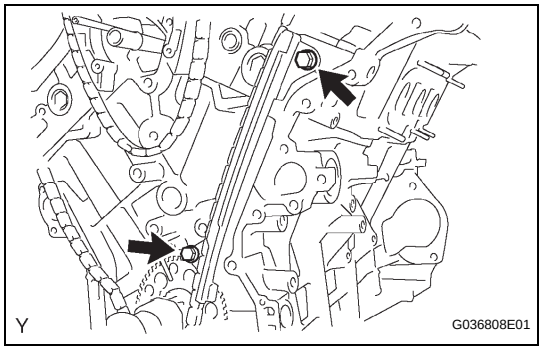

36. REMOVE NO. 1 CHAIN VIBRATION DAMPER

(a) Remove the 2 bolts, then remove the No. 1 chain vibration damper.

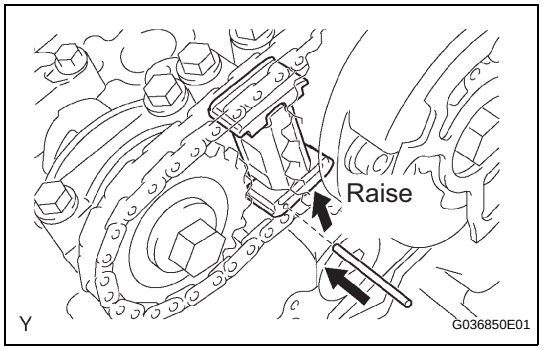

37. REMOVE CAMSHAFT TIMING GEARS AND NO. 2 CHAIN (for Bank 1)

(a) While raising chain tensioner No. 2 upward, insert a pin of ϕ 1.0 mm (0.039 in.) into the hole to fix it.

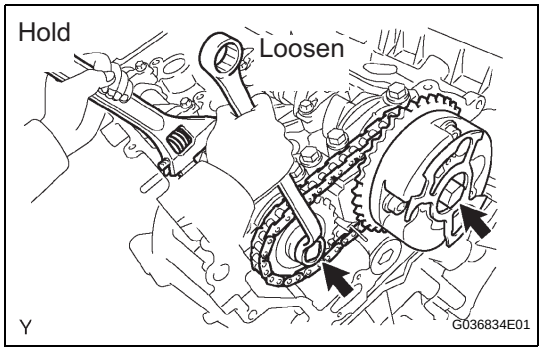

(b) Hold the hexagonal portion of the camshaft with a wrench, and remove the 2 bolts, camshaft timing gear, camshaft timing gear assembly and No. 2 timing chain.

NOTICE:

- **Be careful not to damage the cylinder head and valve lifter with the wrench.**
- **Do not disassemble the camshaft timing gear assembly.**

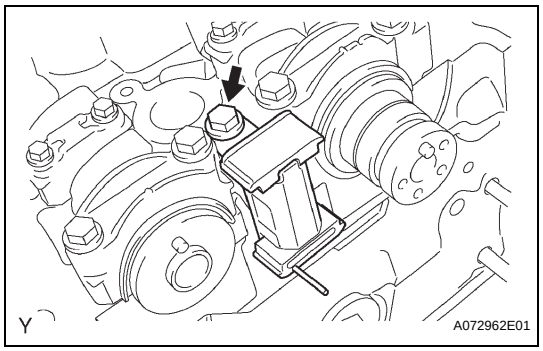

38. REMOVE NO. 2 CHAIN TENSIONER ASSEMBLY

(a) Remove the bolt, then remove the No. 2 chain tensioner.

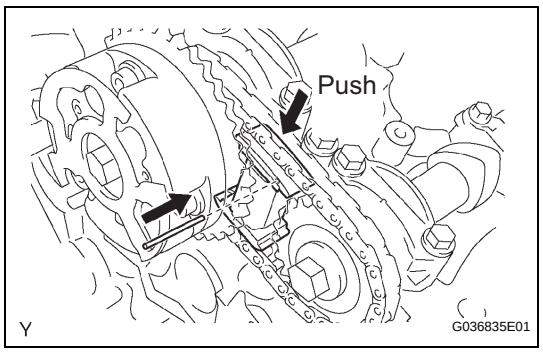

39. REMOVE CAMSHAFT TIMING GEARS AND NO. 2 CHAIN (for Bank 2)

(a) While pushing down the No. 3 chain tensioner, insert a pin of ϕ 1.0 mm (0.039 in.) into the hole to fix it.

EM

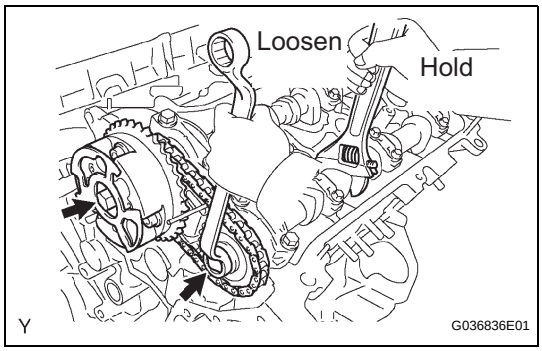

(b) Hold the hexagonal portion of the camshaft with a wrench, and remove the 2 bolts, camshaft timing gear, camshaft timing gear assembly and No. 2 timing chain.

NOTICE:

- **Be careful not to damage the cylinder head and valve lifter with the wrench.**
- **Do not disassemble the camshaft timing gear assembly.**

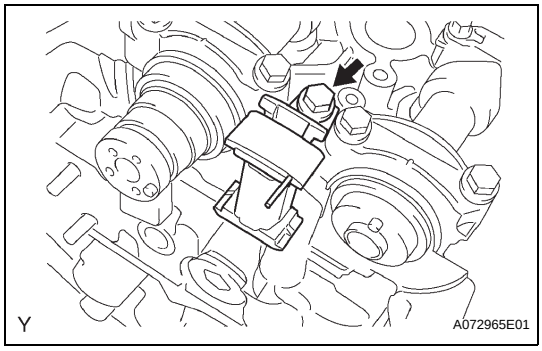

40. REMOVE NO. 3 CHAIN TENSIONER ASSEMBLY

(a) Remove the bolt, then remove the No. 3 chain tensioner.

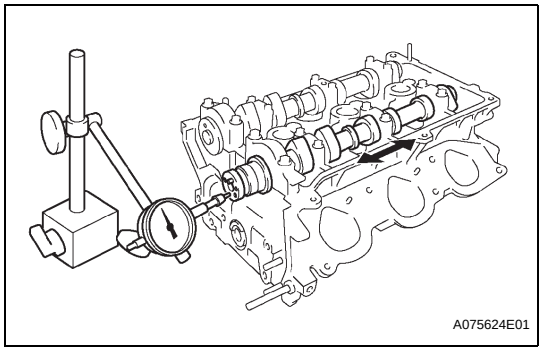

41. INSPECT CAMSHAFT THRUST CLEARANCE

(a) Using a dial indicator, measure the thrust clearance while moving the camshaft back and forth.

Standard thrust clearance:
0.04 to 0.09 mm (0.016 to 0.035 in.)
Maximum thrust clearance:
0.11 mm (0.0043 in.)

If the thrust clearance is greater than the maximum, replace the camshafts.

If necessary, replace the camshaft bearing caps and cylinder head as a set.

42. REMOVE CAMSHAFTS

NOTICE:

Keep the camshaft level while it is being removed. The camshaft thrust clearance is very small and failing to keep it level could crack or damage the cylinder head journal surface, which receives the thrust force. This could subsequently lead the camshaft to seize or break. Perform the following steps to avoid such problems.

(a) Remove the camshafts of bank 1.

(1) Rotate the camshafts counterclockwise using a wrench so that cam lobes of No. 1 cylinder face in the directions as shown in the illustration.

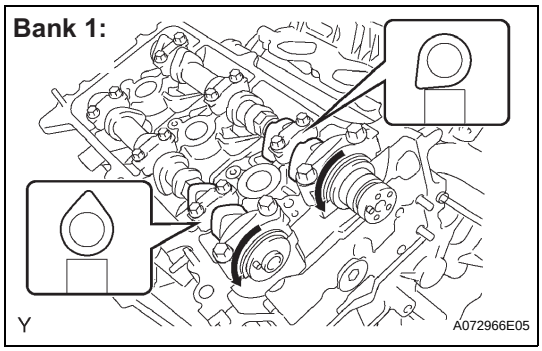

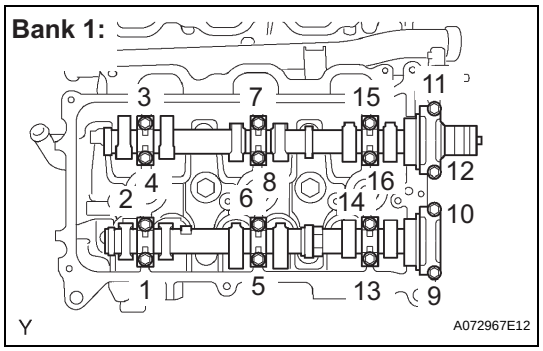

(2) Using several steps, uniformly loosen and remove the 16 bearing cap bolts in the sequence shown in the illustration.
(3) Remove the 8 bearing caps, then remove the 2 camshafts.

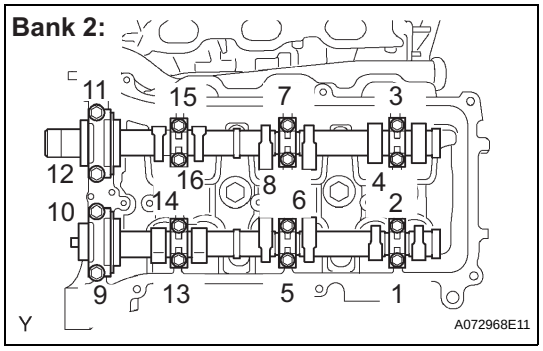

(b) Remove the camshafts of bank 2.
(1) Using several steps, uniformly loosen and remove the 16 bearing cap bolts in the sequence shown in the illustration.
(2) Remove the 8 bearing caps, then remove the 2 camshafts.

EM

43. REMOVE NO. 1 CAMSHAFT BEARING

(a) Remove the No. 1 camshaft bearing from the No. 1 camshaft bearing cap.

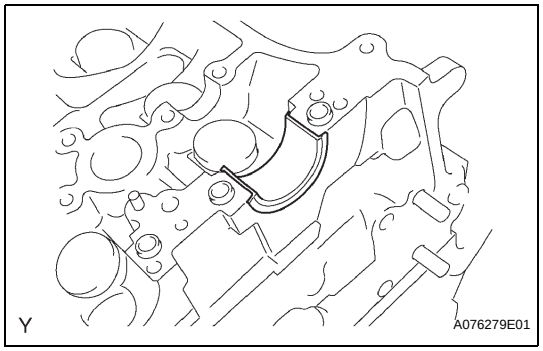

44. REMOVE NO. 2 CAMSHAFT BEARING

(a) Remove the No. 2 camshaft bearing from the cylinder head for bank 1.

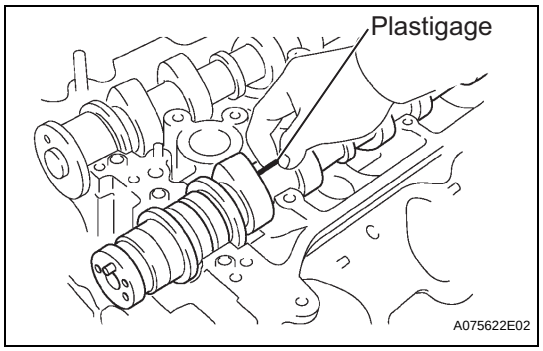

45. INSPECT CAMSHAFT OIL CLEARANCE

(a) Clean the camshaft bearing caps, camshaft bearings and camshaft journals.
(b) Install the camshaft bearing.
(c) Place the camshaft on the cylinder head.
(d) Lay a strip of Plastigage across each camshaft journal.
(e) Install the camshaft bearing caps.
NOTICE:
Do not turn the camshafts.
(f) Remove the camshaft bearing caps.
(g) Measure the Plastigage at its widest point.
Standard oil clearance (Bank 1)

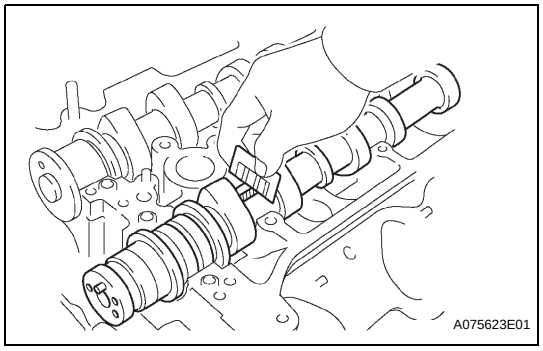

Camshaft Bearing Cap	Specification
No. 1 (Intake)	0.008 to 0.038 mm (0.0003 to 0.0015 in.)
No. 1 (Exhaust)	0.040 to 0.079 mm (0.0016 to 0.0031 in.)
Others	0.025 to 0.062 mm (0.0010 to 0.0024 in.)

Standard oil clearance (Bank 2)

Camshaft Bearing Cap	Specification
No. 1	0.040 to 0.079 mm (0.0016 to 0.0031 in.)

Camshaft Bearing Cap	Specification
Others	0.025 to 0.062 mm (0.0010 to 0.0024 in.)

Maximum oil clearance (Bank 1)

Camshaft Bearing Cap	Specification
No. 1 (Intake)	0.07 mm (0.0028 in.)
Others	0.10 mm (0.0039 in.)

Maximum oil clearance (Bank 2):
0.10 mm (0.0039 in.)

If the oil clearance is greater than the maximum, replace the camshaft bearings and/or camshafts. If necessary, replace the camshaft bearing caps and cylinder head together.

Reference

Cylinder head journal bore diameter	40.009 to 40.017 mm (1.5752 to 1.5755 in.)
Camshaft bearing center wall thickness (Mark "2")	2.004 to 2.008 mm (0.0789 to 0.0791 in.)
Camshaft journal diameter	35.971 to 35.985 mm (1.4165 to 1.4167 in.)

(h) Remove the Plastigage completely.
(i) Remove the camshafts.
(j) Remove the camshaft bearing.

46. REMOVE CYLINDER HEADS

(a) Using several steps, loosen the 8 cylinder head bolts on each cylinder head with a 10 mm bi-hexagon wrench in the sequence shown in the illustration. Remove the 16 cylinder head bolts, then remove the plate washers.

NOTICE:
- **Be careful not to drop the plate washers into the cylinder head.**
- **Cylinder head warpage or cracking could result from removing the bolts in the wrong order.**

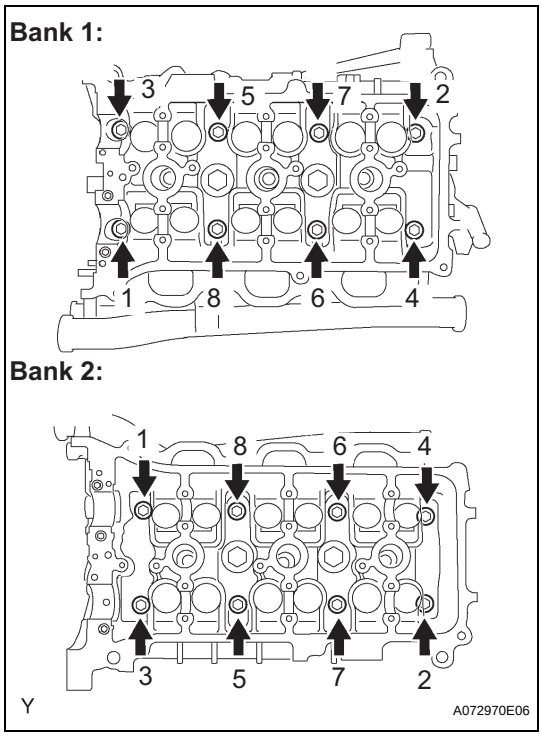

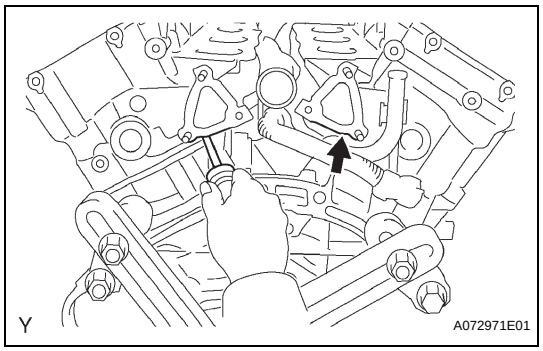

(b) Lift the cylinder head from the dowels on the cylinder block, and place the 2 cylinder heads on wooden blocks on a bench.
NOTICE:
Be careful not to damage the contact surfaces of the cylinder head and cylinder block.
HINT:
If the cylinder head is difficult to remove, pry between the cylinder head and cylinder block with a screwdriver.
(c) Remove the bank 1 and bank 2 cylinder head gaskets.

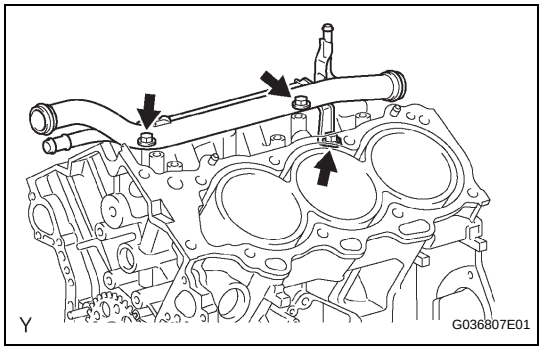

47. REMOVE NO. 1 WATER OUTLET PIPE
(a) Separate the knock sensor wire.
(b) Remove the 3 bolts, then remove the water outlet pipe.

EM

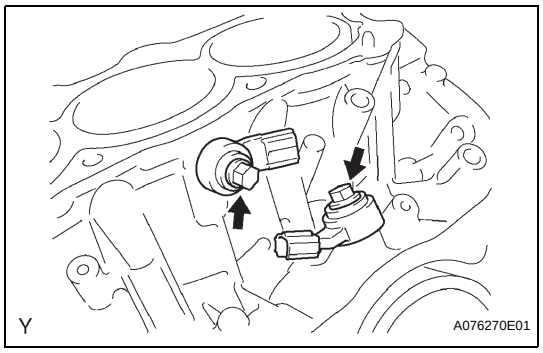

48. REMOVE KNOCK SENSOR
(a) Disconnect the 2 knock sensor connectors.
(b) Remove the 2 bolts, then remove the 2 knock sensors.

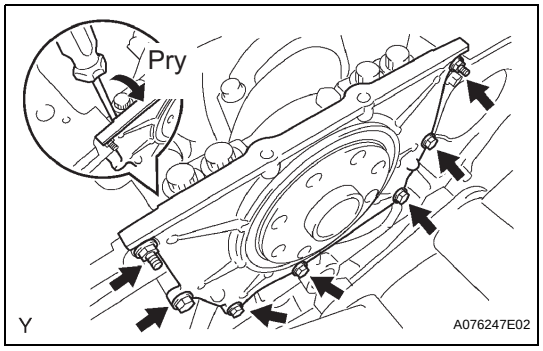

49. REMOVE REAR ENGINE OIL SEAL RETAINER
(a) Remove the 5 bolts and 2 nuts.
(b) Using a screwdriver, remove the oil seal retainer by prying between the oil seal retainer and crankshaft bearing cap.

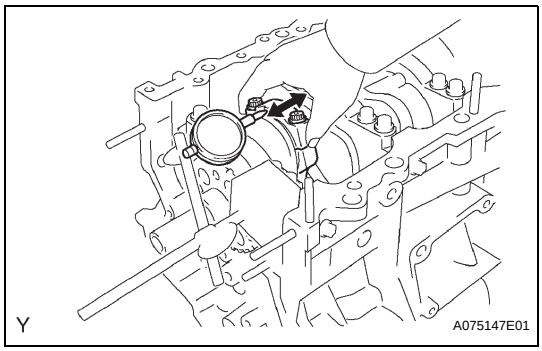

50. INSPECT CONNECTING ROD THRUST CLEARANCE

(a) Using a dial indicator, measure the thrust clearance while moving the connecting rod back and forth.
Standard thrust clearance:
0.15 to 0.30 mm (0.0059 to 0.0118 in.)
Maximum thrust clearance:
0.35 mm (0.0138 in.)

51. INSPECT CONNECTING ROD OIL CLEARANCE

(a) Check the matchmarks on the connecting rod and cap are aligned to ensure correct assembly.

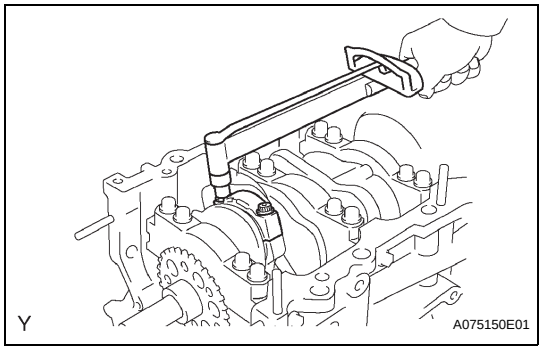

(b) Remove the 2 connecting rod cap bolts.
(c) Clean the crank pin, bearing and connecting rod.
(d) Check the crank pin and bearing for any pits and scratches.

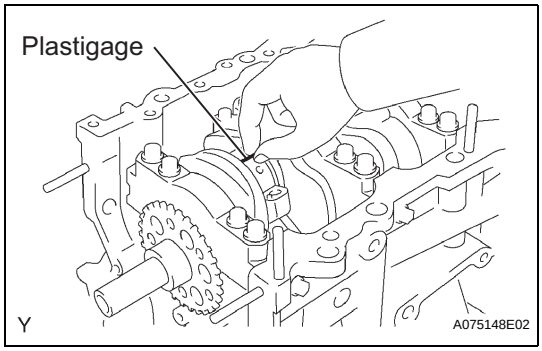

(e) Lay a strip of plastigage across the crank pin.

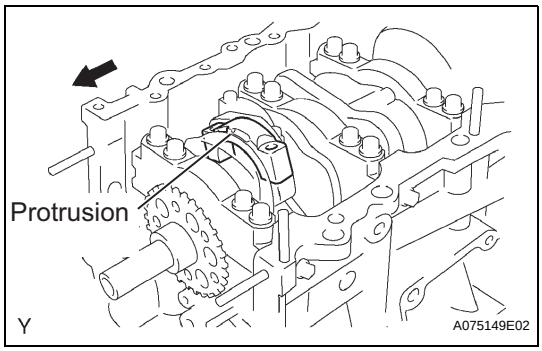

(f) Check that the protrusion of the connecting rod cap is facing in the correct direction.
(g) Apply a light coat of engine oil to the threads of the connecting rod cap bolts.

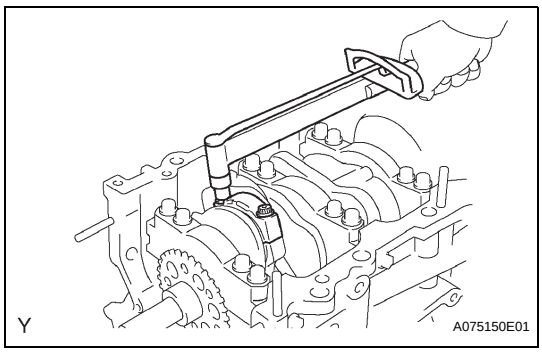

(h) Tighten the bolts alternately to the specified torque.
Torque: 25 N*m (250 kgf*cm, 18 ft.*lbf)

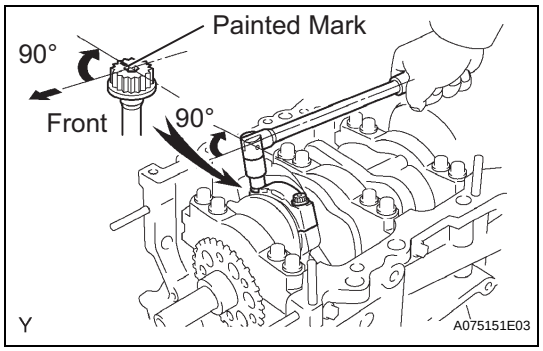

(i) Mark the front side of the each connecting cap bolt with paint.

(j) Retighten the cap bolts 90° as shown in the illustration.

NOTICE:

Do not turn the crankshaft.

(k) Remove the 2 bolts, connecting rod cap and lower bearing.

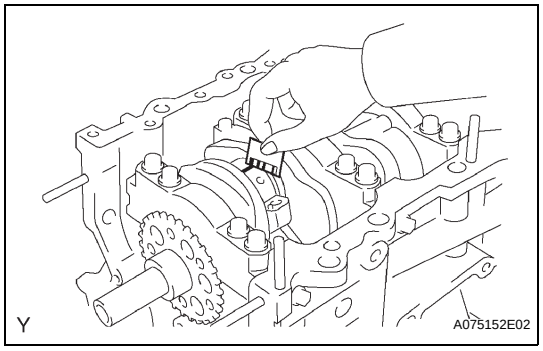

(l) Measure the plastigage at its widest point.

Standard oil clearance:

0.026 to 0.046 mm (0.0010 to 0.0018 in.)

Maximum oil clearance:

0.066 mm (0.0025 in.)

NOTICE:

Completely remove the plastigage.

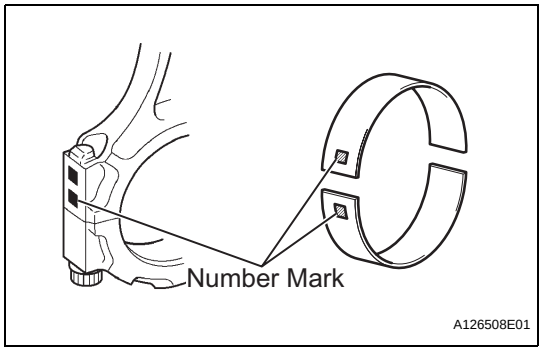

(m) When replacing the bearing, replace it with one with the same number as marked on the connecting rod. There are 4 sizes of standard bearings, marked "1", "2", "3" and "4".

HINT:

Standard bearing center wall thickness

Mark	mm (in.)
"1"	1.484 to 1.487 (0.0584 to 0.0585)
"2"	1.487 to 1.490 (0.0585 to 0.0587)
"3"	1.490 to 1.493 (0.0587 to 0.0588)
"4"	1.493 to 1.496 (0.0588 to 0.0589)

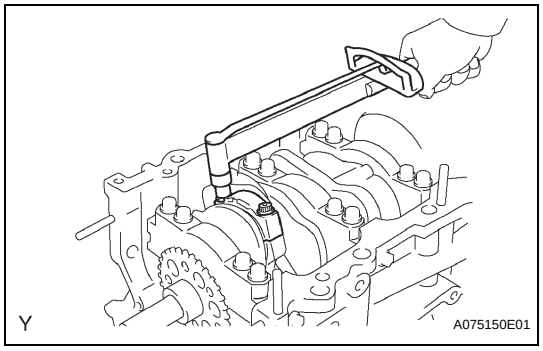

(n) Remove the 2 connecting rod cap bolts.

EM

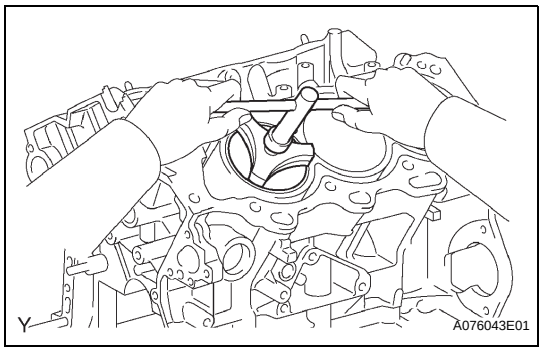

52. REMOVE PISTON SUB-ASSEMBLY WITH CONNECTING ROD

(a) Using a ridge reamer, remove all the carbon from the top of the cylinder.

(b) Push in the piston, connecting rod assembly and upper bearing through the top of the cylinder block.
HINT:
- Keep the bearings, connecting rod and cap together.
- Arrange the piston and connecting rod in the correct order.

53. REMOVE CONNECTING ROD BEARING

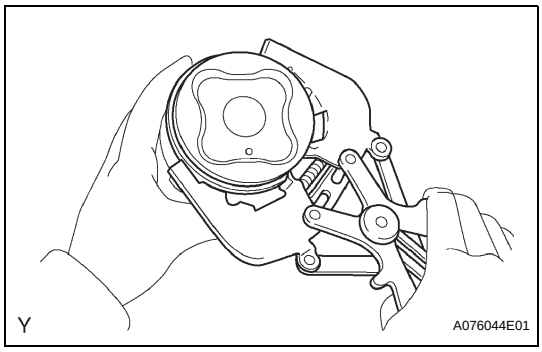

54. REMOVE PISTON RING SET

(a) Using a piston ring expander, remove the 2 compression rings.

(b) Remove the 2 side rails and oil ring by hand.

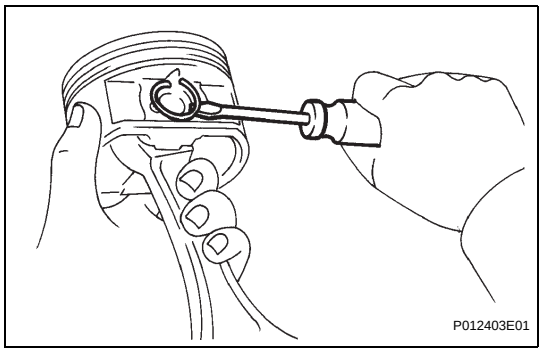

55. REMOVE HOLE SNAP RING

(a) Using a small screwdriver, pry out the 2 snap rings.

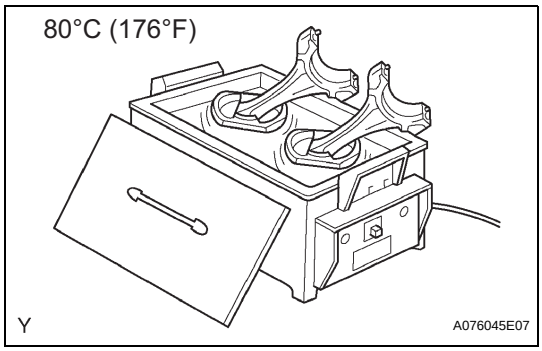

56. REMOVE WITH PISTON SUB-ASSEMBLY

(a) Gradually heat the piston to approximately 80°C (176°F).

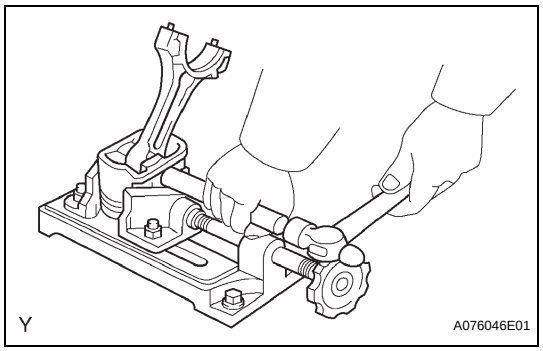

(b) Using a plastic-faced hammer and brass bar, lightly tap out the piston pin and remove the connecting rod.
HINT:
- The piston and pin are a matched set.
- Arrange the pistons, pins, rings, connecting rods and bearings in the correct order.

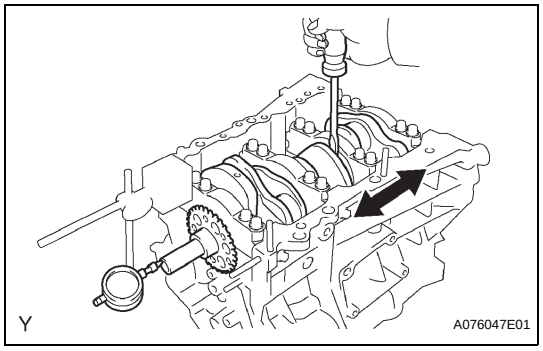

57. INSPECT CRANKSHAFT THRUST CLEARANCE

(a) Using a dial indicator, measure the thrust clearance while prying the crankshaft back and forth with a screwdriver.
Standard thrust clearance:
0.04 to 0.24 mm (0.0016 to 0.0094 in.)
Maximum thrust clearance:
0.30 mm (0.0118 in.)
If the thrust clearance is greater than the maximum, replace the pair of the thrust washers or crankshaft.
HINT:
Thrust washer thickness:
1.93 to 1.98 mm (0.0760 to 0.0780 in.)

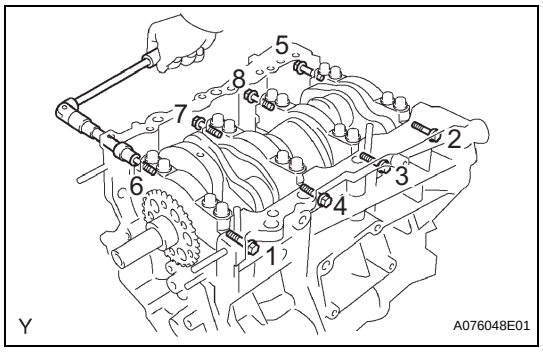

58. INSPECT CRANKSHAFT OIL CLEARANCE

(a) Using several steps, uniformly loosen and remove the 8 main bearing cap bolts and seal washers in the sequence shown in the illustration.

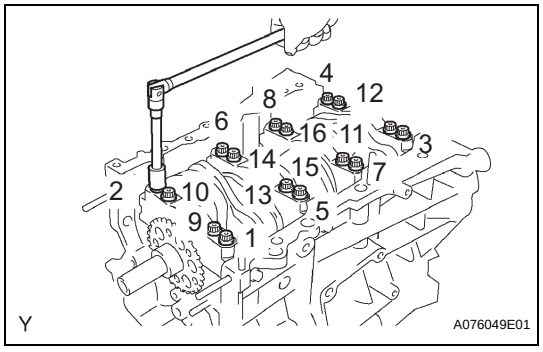

(b) Using several steps, uniformly loosen and remove the 16 main bearing cap bolts in the sequence shown in the illustration.

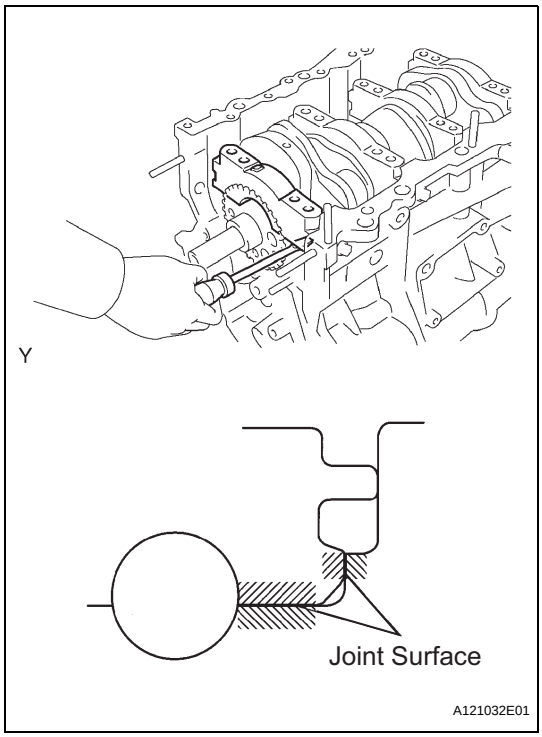

(c) Using a screwdriver, pry out the main bearing caps. Remove the 4 main bearing caps and lower bearings.
NOTICE:
- **Pull up the main bearing cap by turning it to the right and left little by little.**
- **Be careful not to damage the joint surfaces of the cylinder block and the main bearing cap.**

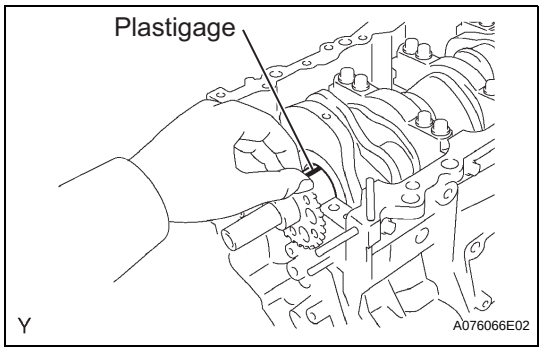

(d) Lay a strip of plastigage across each journal.

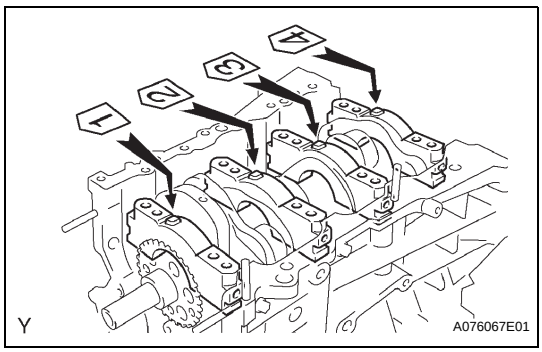

(e) Examine the front marks and numbers, check the sequence order is as shown and install the bearing caps onto the cylinder block.
(f) Apply a light coat of engine oil to the threads of bearing cap bolts.
(g) Temporarily install the 8 main bearing cap bolts in the inside positions.

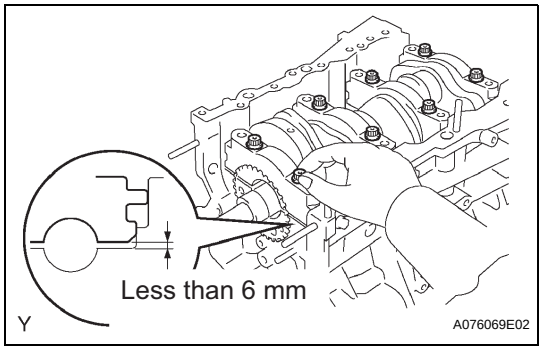

(h) Install the main bearing caps. Tighten the 2 bolts for each bearing cap until the clearance between the bearing cap and the cylinder block is under 6 mm (0.23 in.).

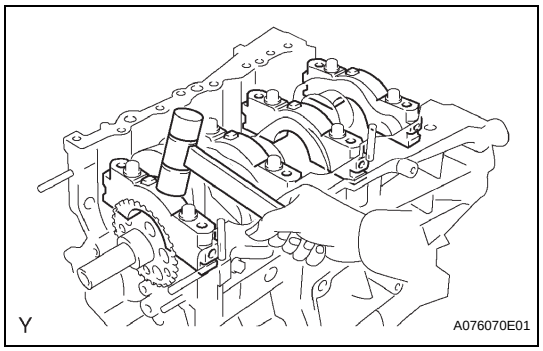

(i) Using a plastic-faced hammer, lightly tap the bearing cap to ensure a proper fit.
(j) Apply a light coat of engine oil to the threads of main bearing cap bolts.

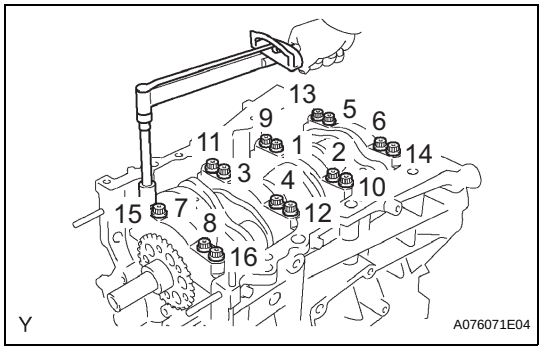

(k) Install the 16 main bearing cap bolts. Using several steps, tighten the bolts uniformly in the sequence shown in the illustration.
Torque: 61 N*m (622 kgf*cm, 45 ft.*lbf)

EM

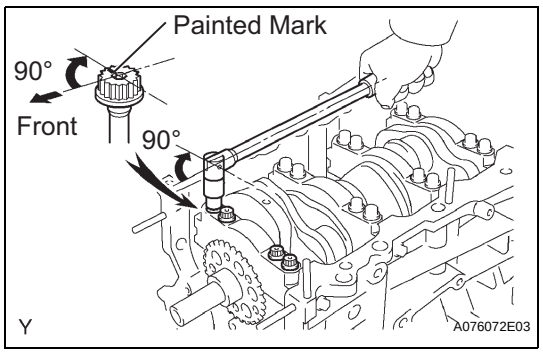

(l) Mark the front side of the bearing cap bolts with paint.
(m) Retighten the bearing cap bolts 90° in the sequence as shown.
(n) Check that the painted mark is now at a 90° angle from the front.
NOTICE:
Do not turn the crankshaft.

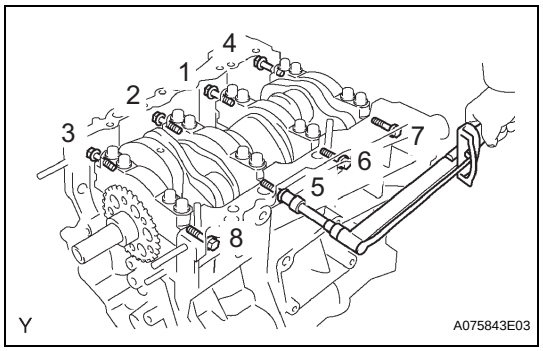

(o) Install the 8 main bearing cap bolts. Using several steps, tighten the bolts uniformly in the sequence shown in the illustration.
Torque: 25 N*m (255 kgf*cm, 18 ft.*lbf)
(p) Remove the main bearing caps.

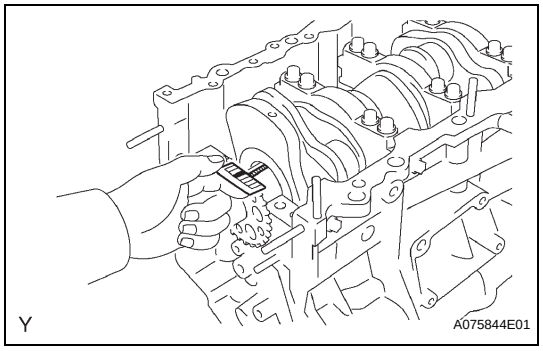

(q) Measure the Plastigage at its widest point.
Standard oil clearance:
0.018 to 0.030 mm (0.0007 to 0.0012 in.)
Maximum clearance:
0.046 mm (0.0018 in.)
If the oil clearance is greater than the maximum, replace the bearings. If necessary, replace the crankshaft.
NOTICE:
Completely remove the plastigage.

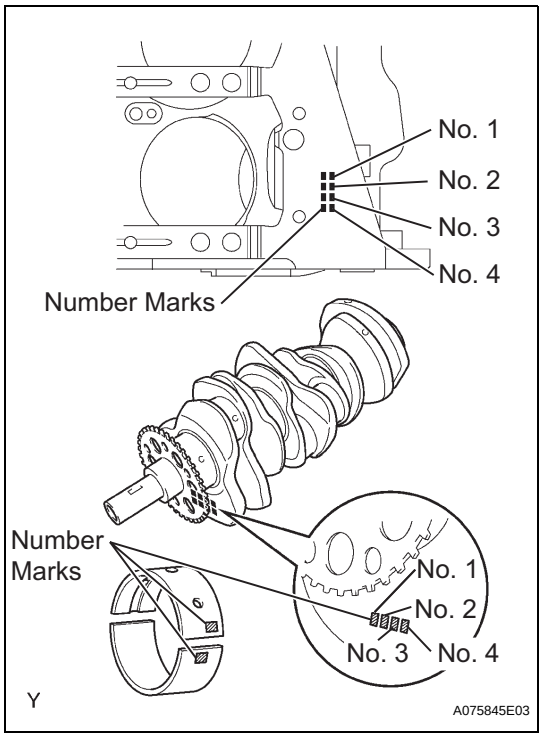

(r) Replace the bearing with the same number. If the number of the bearing cannot be determined, select the correct bearing by adding together the numbers imprinted on the cylinder block and crankshaft, then refer to the table below for the appropriate bearing number. There are 5 size of standard bearings, marked "1", "2", "3", "4" and "5".

Journal bearing

Cylinder block (A) + Crankshaft	0 -5	6 -11	12 -17	18 - 23	24 - 28
Use Bearing	"1"	"2"	"3"	"4"	"5"

HINT:
EXAMPLE
Cylinder block "11" (A) + Crankshaft "06" (B)
=Total number 17 (Use bearing "3")

Item	Mark	mm (in.)
Cylinder block main journal bore diameter (A)	"00"	77.000 (3.0315)
	"01"	77.001 (3.0315)
	"02"	77.002 (3.0316)
	"03"	77.003 (3.0316)
	"04"	77.004 (3.0317)
	"05"	77.005 (3.0317)
	"06"	77.006 (3.0317)
	"07"	77.007 (3.0318)
	"08"	77.008 (3.0318)
	"09"	77.009 (3.0319)
	"10"	77.010 (3.0319)
	"11"	77.011 (3.0319)
	"12"	77.012 (3.0320)
	"13"	77.013 (3.0320)
	"14"	77.014 (3.0320)
	"15"	77.015 (3.0321)
	"16"	77.016 (3.0321)
Crankshaft main journal diameter (B)	"00"	71.999 to 72.000 (2.8346 to 2.8346)
	"01"	71.998 to 71.999 (2.8346 to 2.8346)
	"02"	71.997 to 71.998 (2.8345 to 2.8346)
	"03"	71.996 to 71.997 (2.8345 to 2.8346)
	"04"	71.995 to 71.996 (2.8344 to 2.8345)
	"05"	71.994 to 71.995 (2.8344 to 2.8344)
	"06"	71.993 to 71.994 (2.8343 to 2.8344)
	"07"	71.992 to 71.993 (2.8343 to 2.8343)
	"08"	71.991 to 71.992 (2.8343 to 2.8343)
	"09"	71.990 to 71.991 (2.8343 to 2.8343)
	"10"	71.989 to 71.990 (2.8342 to 2.8343)
	"11"	71.988 to 71.989 (2.8342 to 2.8342)

Item	Mark	mm (in.)
Standard bearing center wall thickness	"1"	2.488 to 2.491 (0.0980 to 0.0981)
	"2"	2.491 to 2.494 (0.0981 to 0.0982)
	"3"	2.494 to 2.497 (0.0982 to 0.0983)
	"4"	2.497 to 2.500 (0.0982 to 0.0984)
	"5"	2.500 to 2.503 (0.0984 to 0.0985)

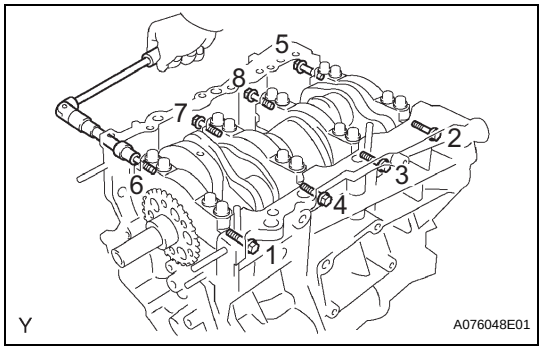

59. REMOVE CRANKSHAFT

(a) Using several steps, uniformly loosen and remove the 8 main bearing cap bolts and seal washers in the sequence shown in the illustration.

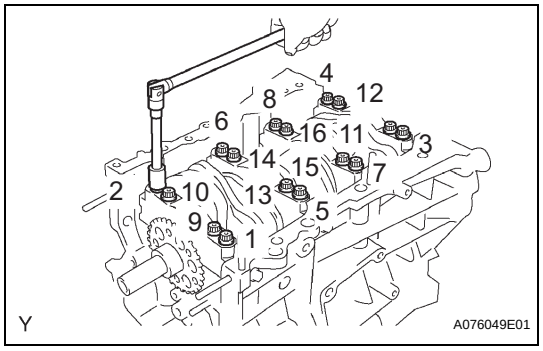

(b) Using several steps, uniformly loosen and remove the 16 main bearing cap bolts in the sequence shown in the illustration.

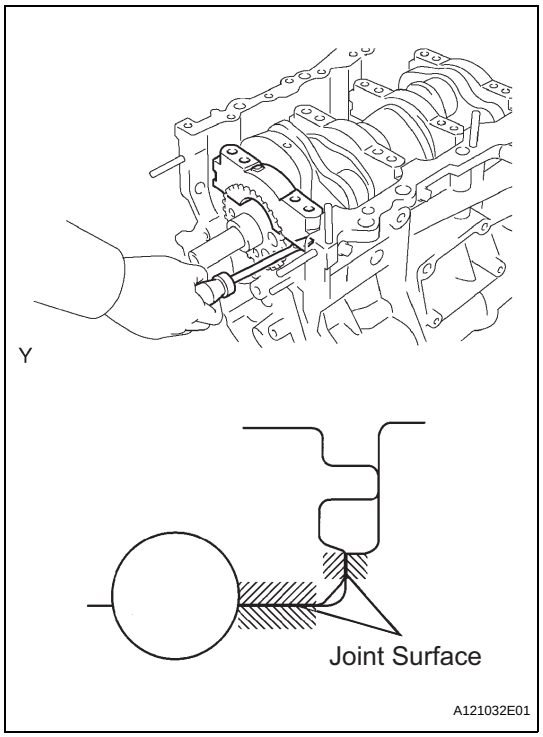

(c) Using a screwdriver, pry out the main bearing caps. Remove the 4 main bearing caps and lower bearings.

NOTICE:

- **Pull up the main bearing cap by turning it to the right and left little by little.**
- **Be careful not to damage the joint surfaces of the cylinder block and the main bearing cap.**

(d) Remove the crankshaft.

60. REMOVE CRANKSHAFT THRUST WASHER SET

61. REMOVE CRANKSHAFT BEARING

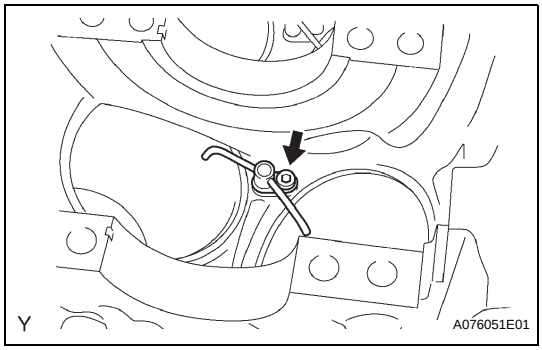

62. REMOVE NO. 1 SUB-ASSEMBLY OIL NOZZLE

(a) Using a 5 mm socket hexagon wrench, remove the 3 hexagon cap head blots and the 3 oil nozzles.

63. REMOVE OIL JET

64. REMOVE TIGHT PLUG

65. REMOVE STRAIGHT PIN

66. REMOVE STUD BOLT

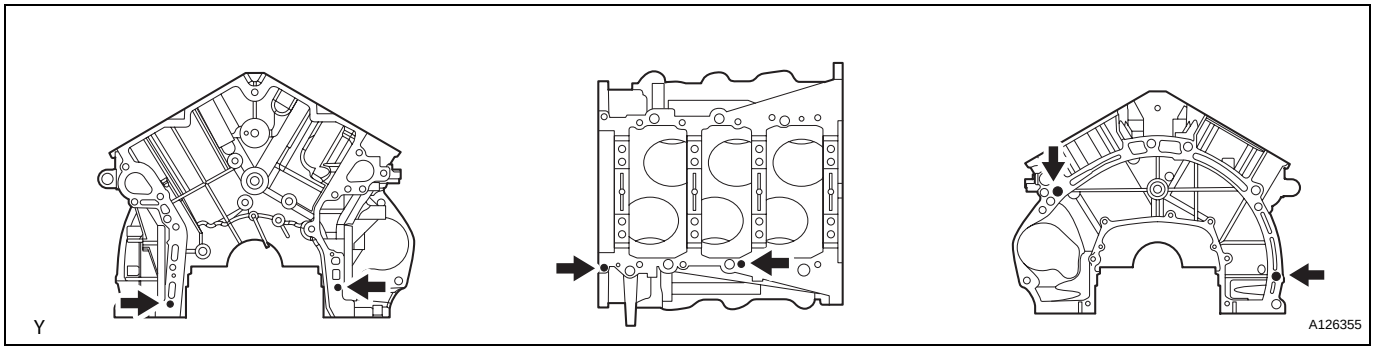

67. DISASSEMBLY CYLINDER HEAD SUB-ASSEMBLY

Refer to the procedures up to "DISASSEMBLY CYLINDER HEAD" (See page EM-73).

INSPECTION

1. **INSPECT CAMSHAFTS (See page EM-47)**
2. **INSPECT CAMSHAFT TIMING GEAR ASSEMBLY (See page EM-47)**
3. **INSPECT CYLINDER HEAD SET BOLT (See page EM-75)**
4. **INSPECT CHAIN SUB-ASSEMBLY**

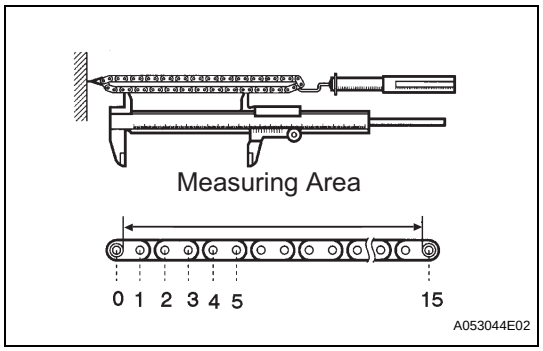

(a) Using a spring scale, apply 147 N (15.0 kgf, 33.1 lbf) to the chain and measure the length.
Maximum chain length:
146.8 mm (5.780 in.)
NOTICE:
Measure the length in at least 3 places and calculate the average length.
If the chain length is greater than the maximum, replace the chain.

5. **INSPECT NO. 2 CHAIN SUB-ASSEMBLY**

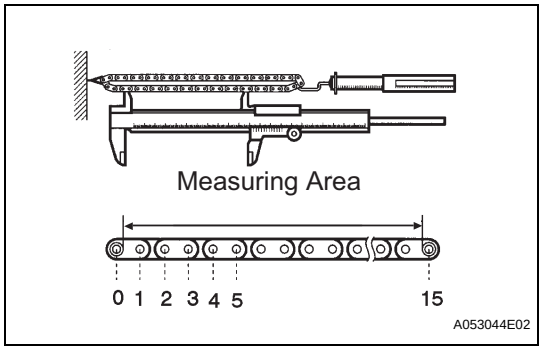

(a) Using a spring scale, apply 147 N (15.0 kgf, 33.1 lbf) to the chain and measure the length.
Maximum chain length:
146.8 mm (5.780 in.)
NOTICE:
Measure the length in at least 3 places and calculate the average length.
If the chain length is greater than the maximum, replace the chain.

6. **INSPECT CAMSHAFT TIMING GEAR ASSEMBLY**

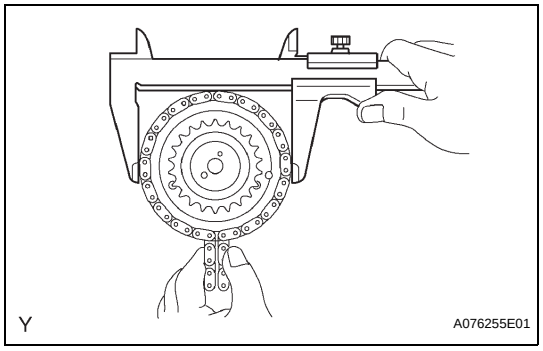

(a) Wrap the chain sub-assembly around the larger gear of the timing gear assembly.
(b) Using vernier calipers, measure the timing gear with the chain wrapped.
Minimum gear diameter (with chain):
115.5 mm (4.547 in.)
NOTICE:
The vernier calipers must be in contact with the chain rollers when measuring.
If the gear diameter is less than the minimum, replace the chain sub-assembly and the camshaft timing gear assembly.

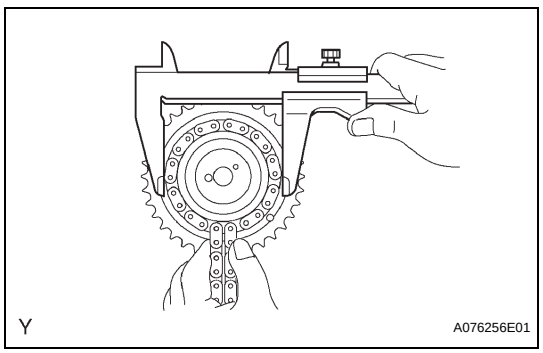

(c) Wrap the No. 2 chain around the smaller gear of timing gear assembly.
(d) Using vernier calipers, measure the timing gear with the chain wrapped.
Minimum gear diameter (with chain):
73.1 mm (2.878 in.)
NOTICE:
The vernier calipers must be in contact the chain rollers when measuring.

EM

If the gear diameter is less than the minimum, replace the No. 2 chain and the camshaft timing gear assembly.

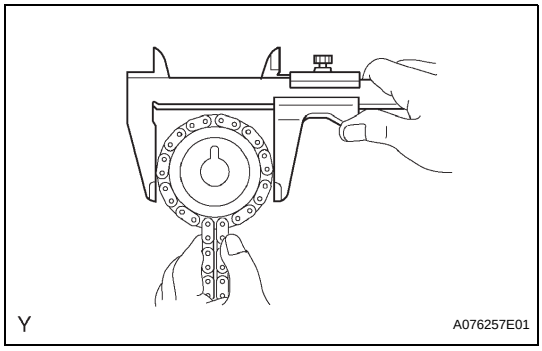

7. INSPECT CAMSHAFT TIMING GEAR OR SPROCKET

(a) Wrap the No. 2 chain around the timing gear.

(b) Using vernier calipers, measure the camshaft timing gear diameter with the chain wrapped.

Minimum gear diameter (with chain):
73.1 mm (2.878 in.)

NOTICE:
The vernier calipers must be in contact the chain rollers when measuring.

If the gear diameter is less than the minimum, replace the No. 2 chain and camshaft timing gear.

EM

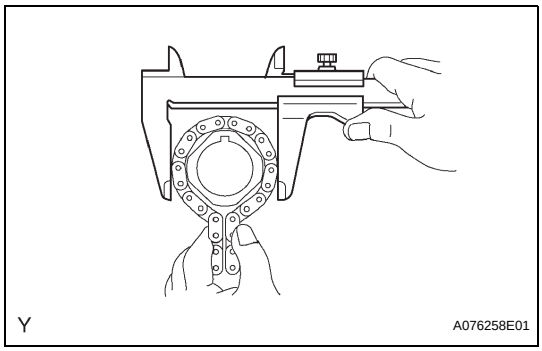

8. INSPECT CRANKSHAFT TIMING GEAR OR SPROCKET

(a) Wrap the chain sub-assembly around the timing gear.

(b) Using vernier calipers, measure the timing gear diameter with the chain wrapped.

Minimum gear diameter (with chain):
61.0 mm (2.402 in.)

NOTICE:
The vernier calipers must be in contact with the chain rollers when measuring.

If the gear diameter is less than the minimum, replace the chain sub-assembly and the crankshaft timing gear.

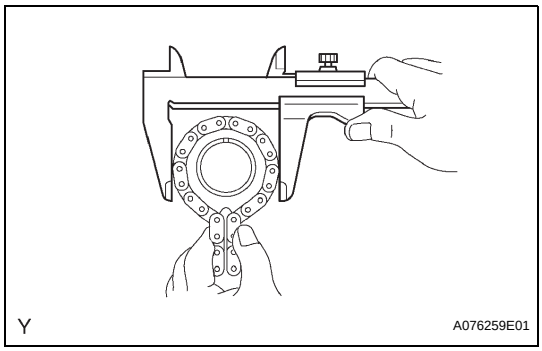

9. INSPECT IDLE SPROCKET ASSEMBLY

(a) Wrap the chain sub-assembly around the idle sprocket.

(b) Using vernier calipers, measure the idle sprocket with the chain wrapped.

Minimum gear diameter (with chain):
61.0 mm (2.402 in.)

NOTICE:
The vernier calipers must be in contact with the chain rollers when measuring.

If the gear diameter is less than the minimum, replace the chain sub-assembly and idle sprocket.

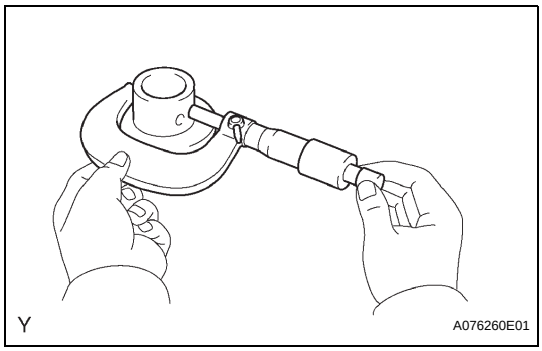

10. INSPECT NO. 1 IDLE GEAR SHAFT

(a) Using a micrometer, measure the idle gear shaft diameter.

Idle gear shaft diameter:
22.987 to 23.000 mm (0.9050 to 0.9055 in.)

If the result is not as specified, replace the idle gear shaft.

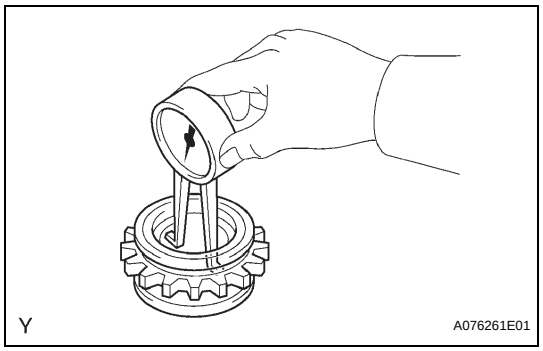

(b) Using a caliper gauge, measure the internal diameter of the idle gear.
Idle gear internal diameter:
23.02 to 23.03 mm (0.9063 to 0.9067 in.)
If the result is not as specified, replace the idle gear.

(c) Subtract the idle gear shaft diameter measurement from the idle gear internal diameter measurement.
Standard oil clearance:
0.020 to 0.043 mm (0.0008 to 0.0017 in.)
Maximum oil clearance:
0.093 mm (0.0037 in.)
If the oil clearance is greater than the maximum, replace the idle gear or gear shaft.

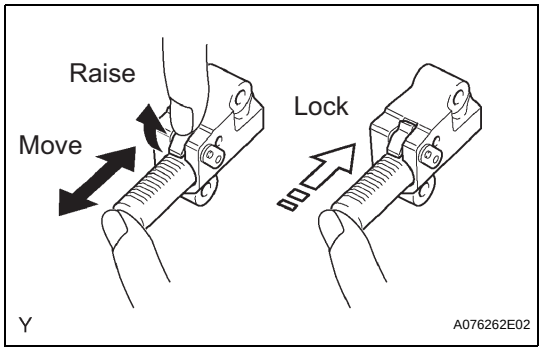

11. INSPECT NO. 1 CHAIN TENSIONER ASSEMBLY

(a) Check that the plunger moves smoothly when the ratchet pawl is raised with finger.

(b) Release the ratchet pawl, then check that the plunger is locked in place by the ratchet pawl and does not move when pushing it with finger.
If the results are not as specified, replace the No. 1 chain tensioner assembly.

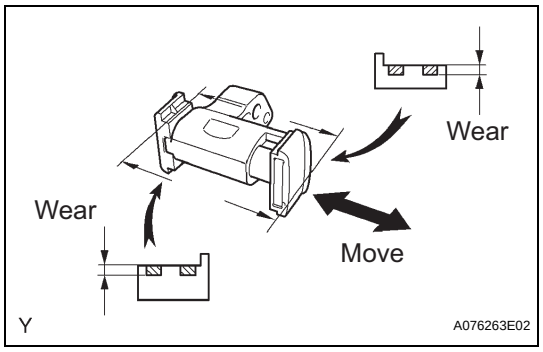

12. INSPECT NO. 2 CHAIN TENSIONER ASSEMBLY

(a) Check that the plunger moves smoothly.

(b) Measure the wear of the chain tensioner slipper.
Maximum wear:
1.0 mm (0.039 in.)
If the wear is greater than the maximum, replace chain tensioner No. 2.

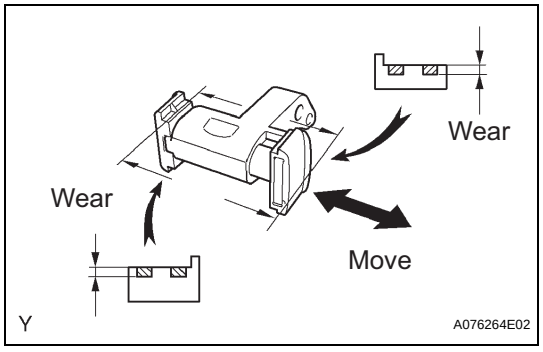

13. INSPECT NO. 3 CHAIN TENSIONER ASSEMBLY

(a) Check that the plunger moves smoothly.

(b) Measure the wear of the chain tensioner slipper.
Maximum wear:
1.0 mm (0.039 in.)
If the wear is greater than the maximum, replace chain tensioner No. 3.

EM

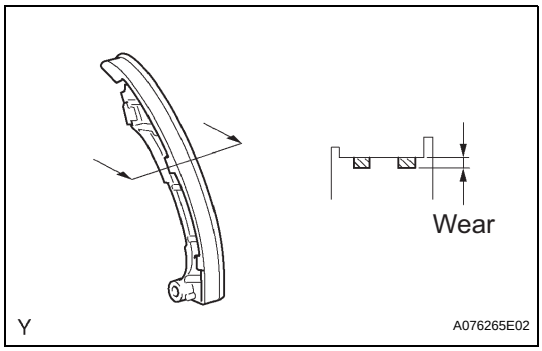

14. **INSPECT CHAIN TENSIONER SLIPPER**
    (a) Measure the wear of the tensioner slipper.
    Maximum wear:
    1.0 mm (0.039 in.)
    If the thickness is greater than the maximum, replace the tensioner slipper.

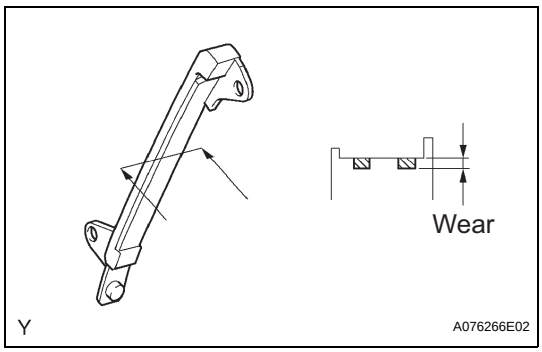

15. **INSPECT NO. 1 CHAIN VIBRATION DAMPER**
    (a) Measure the wear of the vibration damper No. 1.
    Maximum wear:
    1.0 mm (0.039 in.)
    If the thickness is greater than the maximum, replace vibration damper No. 1.

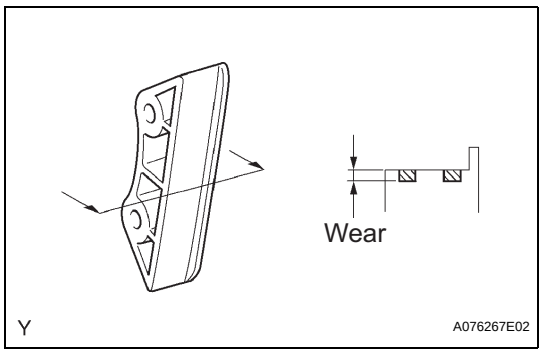

16. **INSPECT NO. 2 CHAIN VIBRATION DAMPER**
    (a) Measure the wear of the vibration damper No. 2 .
    Maximum wear:
    1.0 mm (0.039 in.)
    If the thickness is greater than the maximum, replace vibration damper No. 2.

17. **CLEAN CYLINDER HEAD SUB-ASSEMBLY (See page EM-75)**

18. **INSPECT CYLINDER HEAD SUB-ASSEMBLY (See page EM-77)**

19. **CLEAN VALVE (See page EM-77)**

20. **INSPECT VALVE (See page EM-78)**

21. **CLEAN VALVE SEAT (See page EM-79)**

22. **INSPECT VALVE SEAT (See page EM-79)**

23. **INSPECT INNER COMPRESSION SPRING (See page EM-79)**

24. **INSPECT VALVE GUIDE BUSH OIL CLEARANCE (See page EM-80)**

25. **INSPECT VALVE LIFTER (See page EM-80)**

26. **INSPECT VALVE LIFTER OIL CLEARANCE (See page EM-81)**

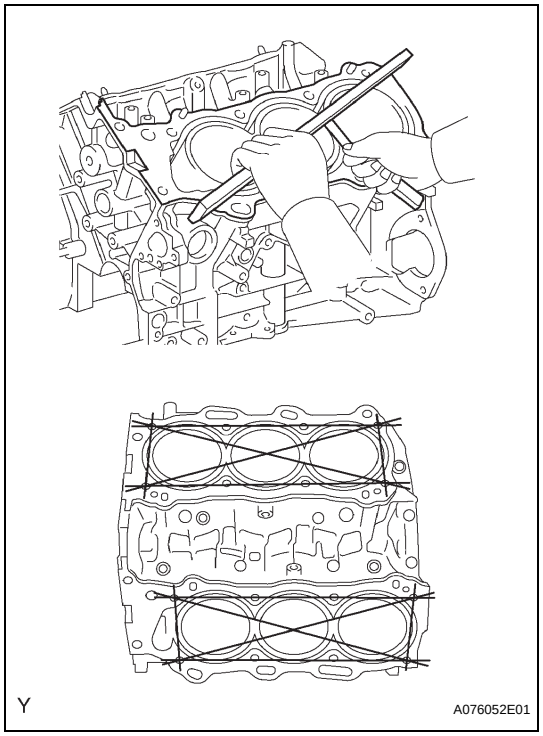

27. CHECK CYLINDER BLOCK FOR WARPAGE

(a) Using a precision straight edge and feeler gauge, measure the warpage of the contact surface of the cylinder head gasket.

Maximum warpage:

0.05 mm (0.0020 in.)

If the warpage is greater than the maximum, replace the cylinder block.

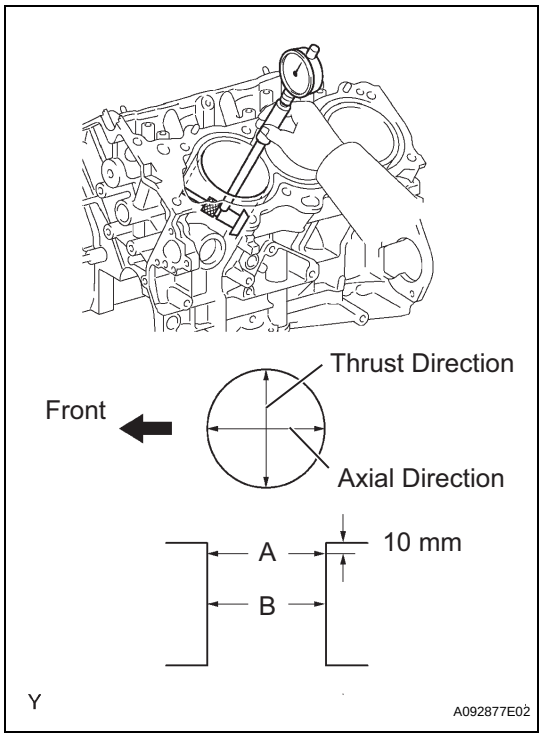

28. INSPECT CYLINDER BORE

(a) Using a cylinder gauge, measure the cylinder bore diameter at positions A and B in the thrust and axial directions.

Standard diameter:

94.000 to 94.012 mm (3.7008 to 3.7013 in.)

Maximum diameter:

94.132mm (3.7060 in.)

If the average diameter of the 4 positions is greater than the maximum, replace the cylinder block.

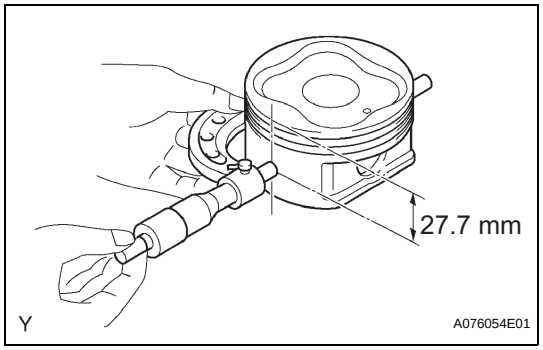

29. INSPECT WITH PISTON SUB-ASSEMBLY

(a) Using a micrometer, measure the piston diameter at right angles to the piston pin center line, 27.7 mm (1.091 in.) from the piston head.

Piston diameter:

93.910 to 93.940 mm (3.6972 to 3.6984 in.)

If the result is not as specified, replace the with piston sub-assembly.

30. INSPECT PISTON OIL CLEARANCE

(a) Subtract the piston diameter measurement from the cylinder bore diameter measurement.

Standard oil clearance:
0.060 to 0.102 mm (0.0031 to 0.0040 in.)
Maximum oil clearance:
0.13 mm (0.0051 in.)

If the oil clearance is greater than the maximum, replace all the 6 pistons. If necessary, replace the cylinder block.

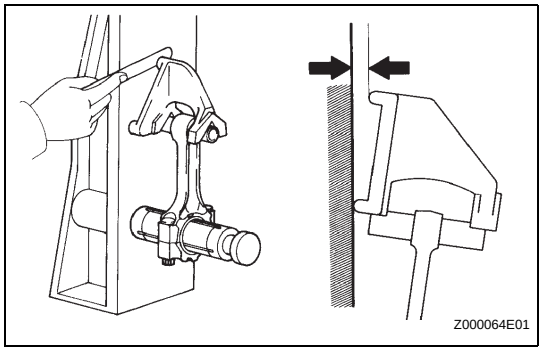

31. INSPECT CONNECTING ROD SUB-ASSEMBLY

(a) Using a rod aligner and feeler gauge, check the connecting rod alignment.

(1) Check for misalignment.

Maximum misalignment:
0.05 mm (0.0020 in.) per 100 mm (3.94 in.)

If misalignment is greater than the maximum, replace the connecting rod assembly.

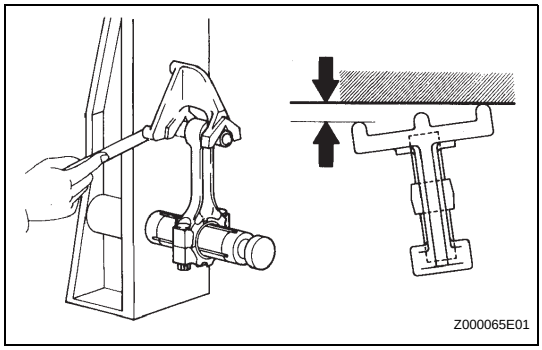

(2) Check the twist.

Maximum twist:
0.15 mm (0.0059 in.) per 100 mm (3.94 in.)

If the twist is greater than the maximum, replace the connecting rod assembly.

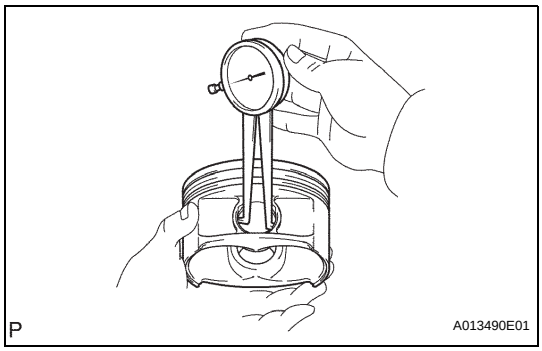

32. INSPECT PISTON PIN OIL CLEARANCE

(a) Using a caliper gauge, measure the internal diameter of the piston pin hole.

Piston pin hole internal diameter:
22.001 to 22.010 mm (0.8662 to 0.8665 in.)
Piston pin hole inside diameter

Mark	mm (in.)
A	22.001 to 22.004 (0.8662 to 0.8663)
B	22.005 to 22.007 (0.8663 to 0.8664)
C	22.008 to 22.010 (0.8665 to 0.8665)

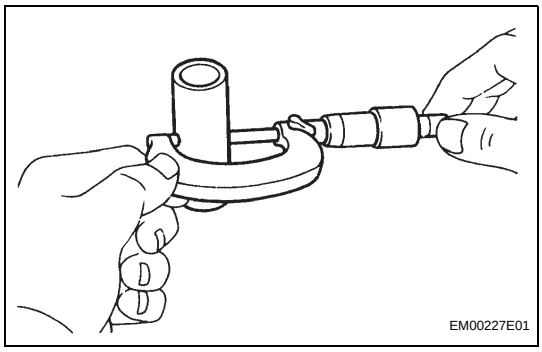

(b) Using a micrometer, measure the piston pin diameter.

Piston pin diameter:
21.997 to 22.006 mm (0.8660 to 0.8664 in.)
Piston pin diameter

Mark	mm (in.)
A	21.997 to 22.000 (0.8660 to 0.8661)
B	22.001 to 22.003 (0.8661 to 0.8663)
C	22.004 to 22.006 (0.8663 to 0.8664)

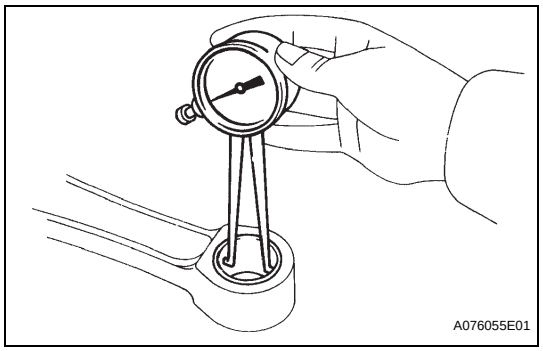

(c) Using a caliper gauge, measure the internal diameter of the connecting rod bushing.
Bushing internal diameter:
22.005 to 22.014 mm (0.8663 to 0.8667 in.)
Bushing internal diameter

Mark	mm (in.)
A	22.005 to 22.008 (0.8663 to 0.8665)
B	22.009 to 22.011 (0.8665 to 0.8666)
C	22.012 to 22.014 (0.8666 to 0.8667)

(d) Subtract the piston pin diameter measurement from the piton pin hole diameter measurement.
Standard oil clearance:
0.001 to 0.007 mm (0.00004 to 0.00028 in.)
Maximum oil clearance:
0.040 mm (0.0016 in.)

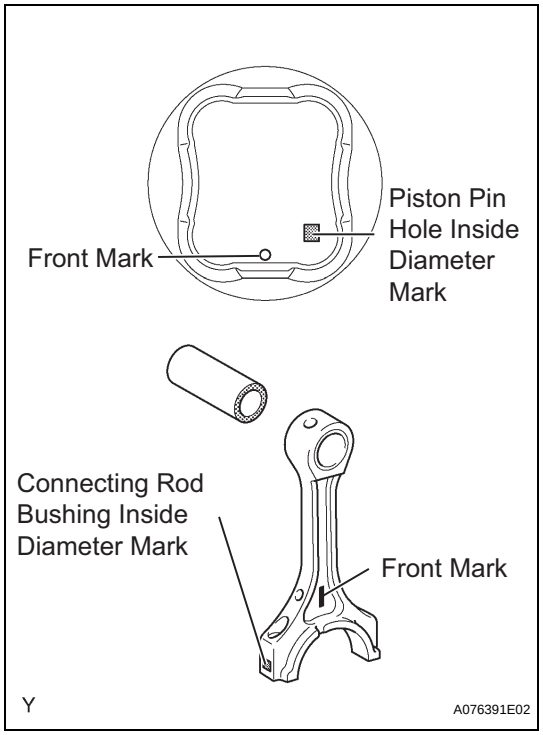

(e) If the oil clearance is greater than the maximum, replace the bushing. If necessary, replace the piston and piston pin together.
(f) Subtract the piston pin diameter measurement from the bushing inside diameter measurement.
Standard oil clearance:
0.005 to 0.011 mm (0.0002 to 0.0004 in.)
Maximum oil clearance:
0.050 mm (0.0020 in.)
(g) If the oil clearance is greater than the maximum, replace the bushing. If necessary, replace the connecting rod and piston pin together.

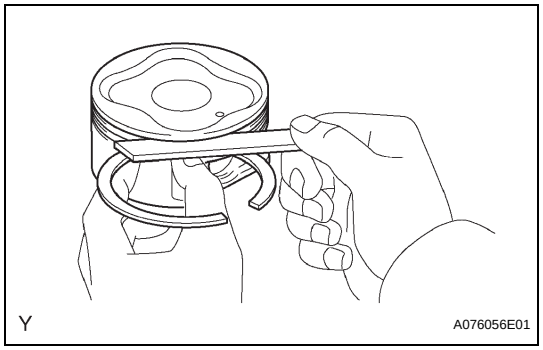

33. INSPECT RING GROOVE CLEARANCE

(a) Using a feeler gauge, measure the clearance between a new piston ring and the wall of the ring groove.
Ring groove clearance

Piston ring	Specification
No. 1	0.02 to 0.07 mm (0.0008 to 0.0028 in.)
No. 2	0.02 to 0.06 mm (0.0008 to 0.0024 in.)
Oil	0.07 to 0.15 mm (0.0028 to 0.0060 in.)

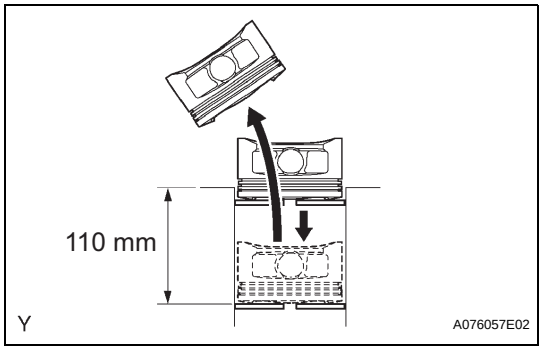

34. INSPECT PISTON RING END GAP

(a) Using a piston, push the piston ring a little beyond the bottom of the ring travel, 110 mm (4.33 in.) from the top of the cylinder block.

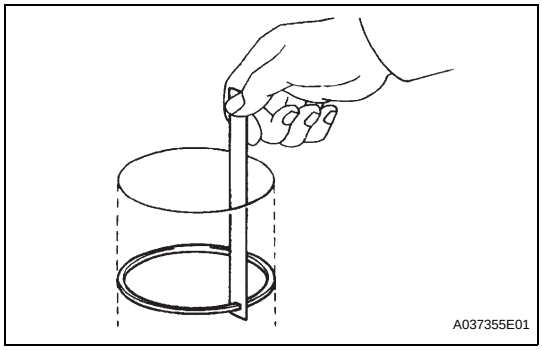

(b) Using a feeler gauge, measure the end gap.

Standard end gap

Piston ring	Specification
No. 1	0.30 to 0.40 mm (0.0118 to 0.0157 in.)
No. 2	0.40 to 0.50 mm (0.0157 to 0.0197 in.)
Oil (Side rail)	0.10 to 0.40 mm (0.0039 to 0.0157 in.)

Maximum end gap

Piston ring	Specification
No. 1	1.0 mm (0.039 in.)
No. 2	1.1 mm (0.043 in.)
Oil (Side rail)	1.0 mm (0.039 in.)

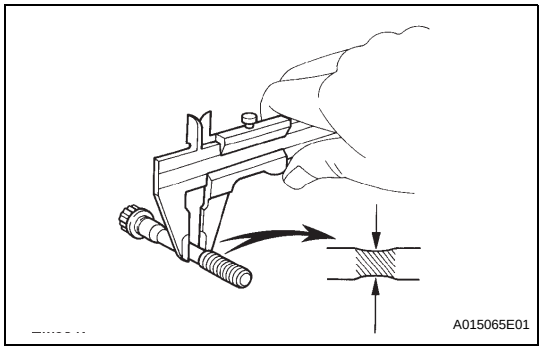

35. INSPECT CONNECTING ROD BOLT

(a) Using vernier calipers, measure the diameter of the elongated portion of the bolt.

Standard diameter:

7.2 to 7.3 mm (0.283 to 0.287 in.)

Minimum diameter:

7.0 mm (0.276 in.)

If the diameter is less than the minimum, replace the bolt.

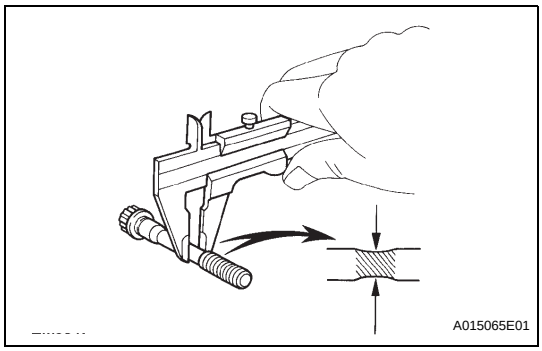

36. INSPECT CRANKSHAFT BEARING CAP SET BOLT

(a) Using vernier calipers, measure the diameter of the elongated portion of the bolt.

Standard diameter:

10.0 to 10.2 mm (0.393 to 0.402 in.)

If the diameter is less than the minimum, replace the bolt.

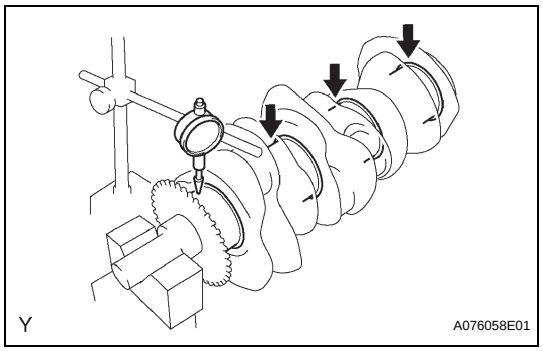

37. INSPECT CRANKSHAFT

(a) Using a dial indicator and V-blocks, measure the runout as shown in the illustration.
Maximum circle runout:
0.06 mm (0.0024 in.)
If the result is not as specified, replace the crankshaft.

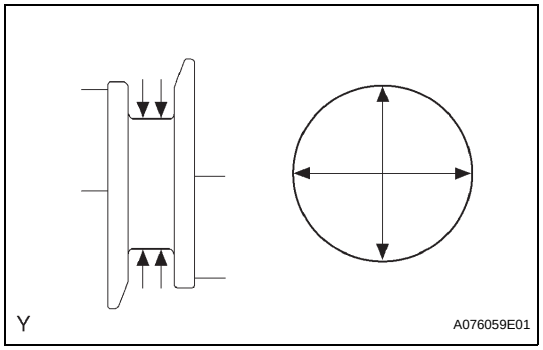

(b) Using a micrometer, measure the diameter of each main journal.
Standard Diameter:
71.988 to 72.000 mm (2.8342 to 2.8346 in.)
If the result is not as specified, replace the crankshaft.

(c) Check each main journal for taper and out-of-roundness as shown.
Maximum taper and out-of-roundness:
0.02 mm (0.0008 in.)
If the result is not as specified, replace the crankshaft.

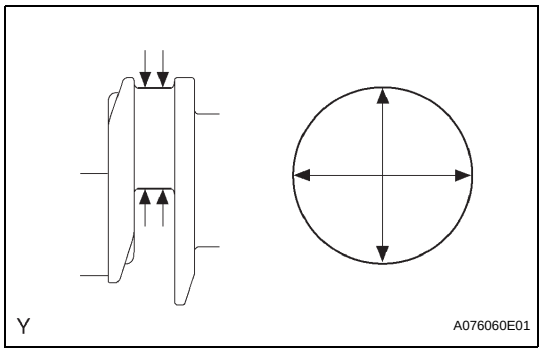

(d) Using a micrometer, measure the diameter of each crank pin.
Standard diameter:
55.992 to 56.000 mm (2.2044 to 2.2047 in.)
If the result is not as specified, replace the crankshaft.

(e) Check each crank pin for taper and out-of-roundness as shown.
Maximum taper and out-of-roundness:
0.02 mm (0.0008 in.)
If the result is not as specified, replace the crankshaft.

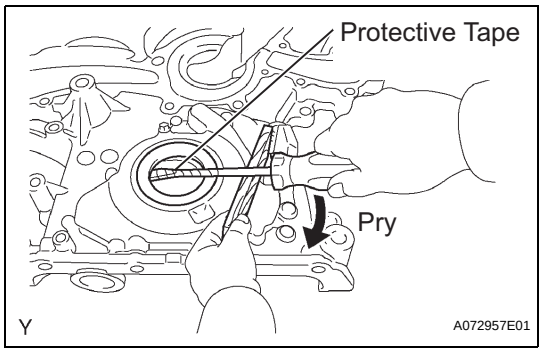

REPLACEMENT

1. REMOVE TIMING GEAR CASE OR TIMING CHAIN CASE OIL SEAL

(a) Using a screwdriver with its tip wrapped in protective tape, pry out the oil seal.
NOTICE:
Do not damage the oil pump assembly.

EM

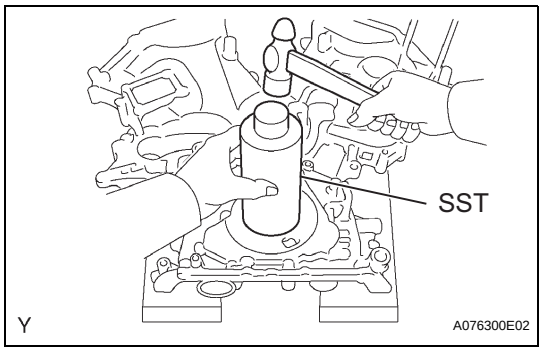

2. INSTALL TIMING GEAR CASE OR TIMING CHAIN CASE OIL SEAL

(a) Using SST and a hammer, tap in a new oil seal until its surface is flush with the timing chain cover edge.
SST 09226-10010

(b) Apply MP grease to the oil seal lip.

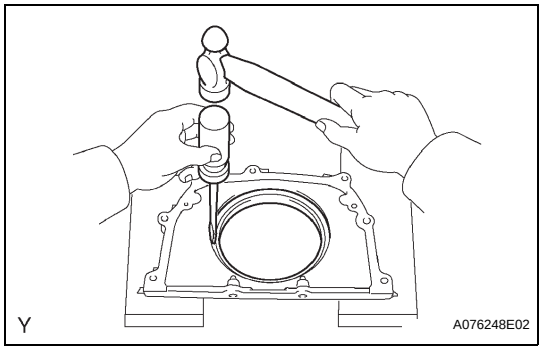

3. REMOVE REAR ENGINE OIL SEAL

(a) Using a screwdriver and hammer, tap the oil seal out.

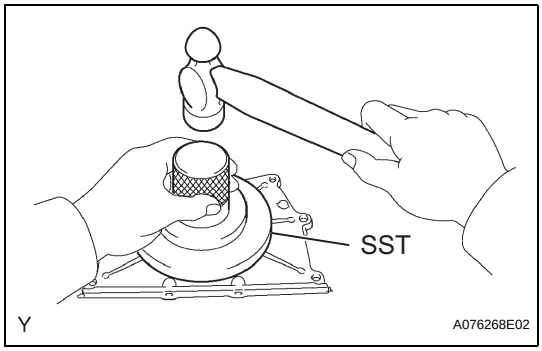

4. INSTALL REAR ENGINE OIL SEAL

(a) Using SST and a hammer, tap in a new oil seal until its surface is flush with the rear oil seal retainer edge.
SST 09223-78010

(b) Apply MP grease to the oil seal lip.

5. REMOVE VALVE GUIDE BUSH (See page EM-81)

6. INSTALL VALVE GUIDE BUSH (See page EM-81)

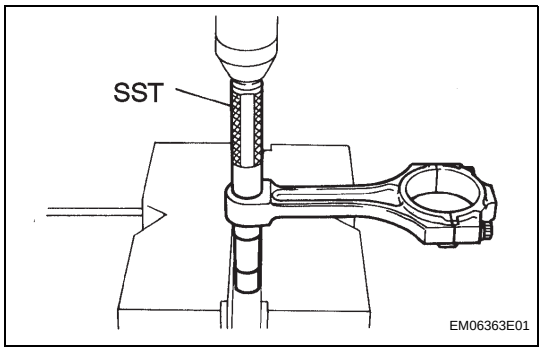

7. REMOVE CONNECTING ROD SMALL END BUSH

(a) Using SST and a press, press out the bushing.
SST 09222-30010

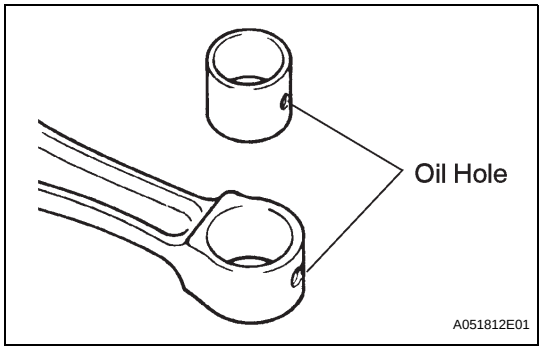

8. INSTALL CONNECTING ROD SMALL END BUSH

(a) Align the oil holes of a new bushing and the connecting rod.

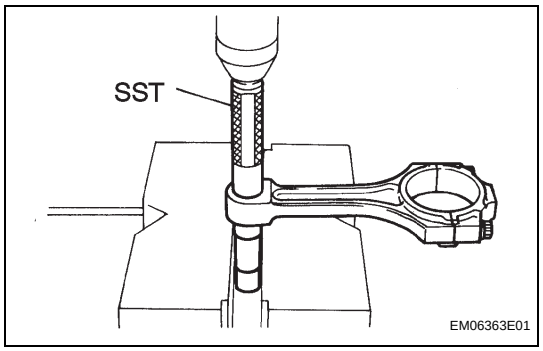

(b) Using SST and a press, press in the bushing.
SST 09222-30010

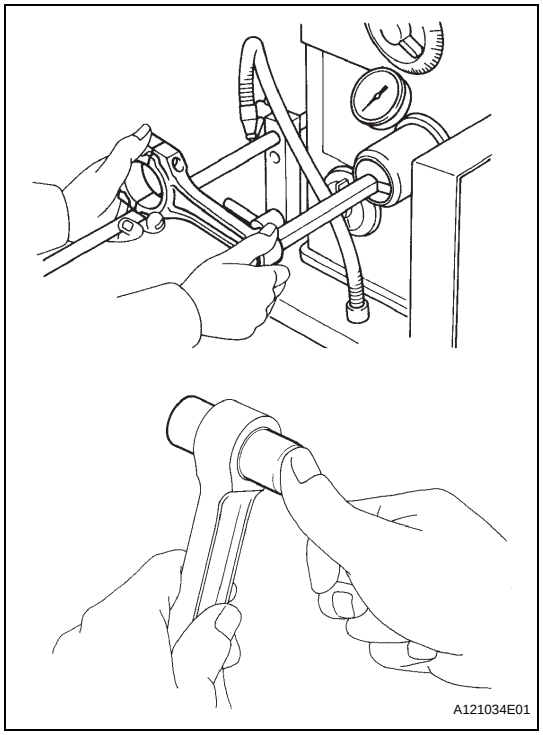

(c) Using a pin hole grinder, hone the bushing to bring the clearance between the bushing and piston pin to the specified value.
Standard oil clearance:
0.005 to 0.011 mm (0.0002 to 0.0004 in.)
HINT:
Check the measurement at room temperature. Coat the piston pin with engine oil, and push it into the connecting rod with a thumb.

EM

REASSEMBLY

1. **REASSEMBLY CYLINDER HEAD SUB-ASSEMBLY**
   Refer to the procedures up to "REASSEMBLY CYLINDER HEAD" (See page EM-82).

2. **INSTALL STUD BOLT**
   (a) Install the stud bolts as shown in the illustration.
   Torque: Stud bolt A
   11 N*m (112 kgf*cm, 8.1 ft.*lbf)
   Stud bolt B
   4.5 N*m (46 kgf*cm, 40 in.*lbf)
   Stud bolt C
   4.0 N*m (41 kgf*cm, 35 in.*lbf)
   Stud bolt D
   4.0 N*m (41 kgf*cm, 35 in.*lbf)

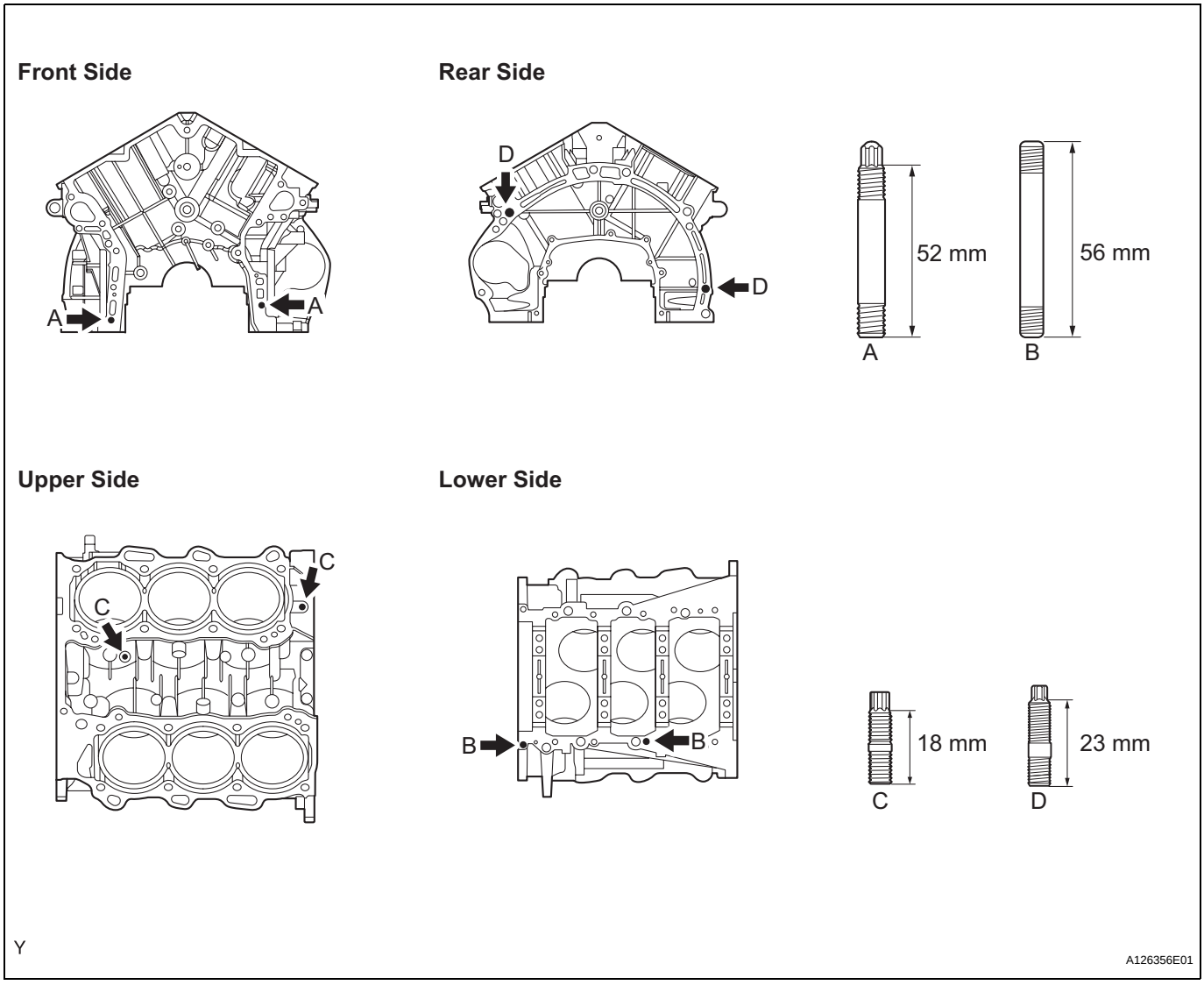

3. **INSTALL STRAIGHT PIN**
   (a) Using a plastic-faced hammer, tap in a new straight pin.
   Standard protrusion:
   Pin A:
   22.5 to 23.5 mm (0.886 to 0.925 in.)

Pin B:
10.5 to 11.5 mm (0.413 to 0.453 in.)
Pin C:
8.5 to 9.5 mm (0.335 to 0.374 in.)
Pin D:
5.5 to 6.5 mm (0.217 to 0.256 in.)

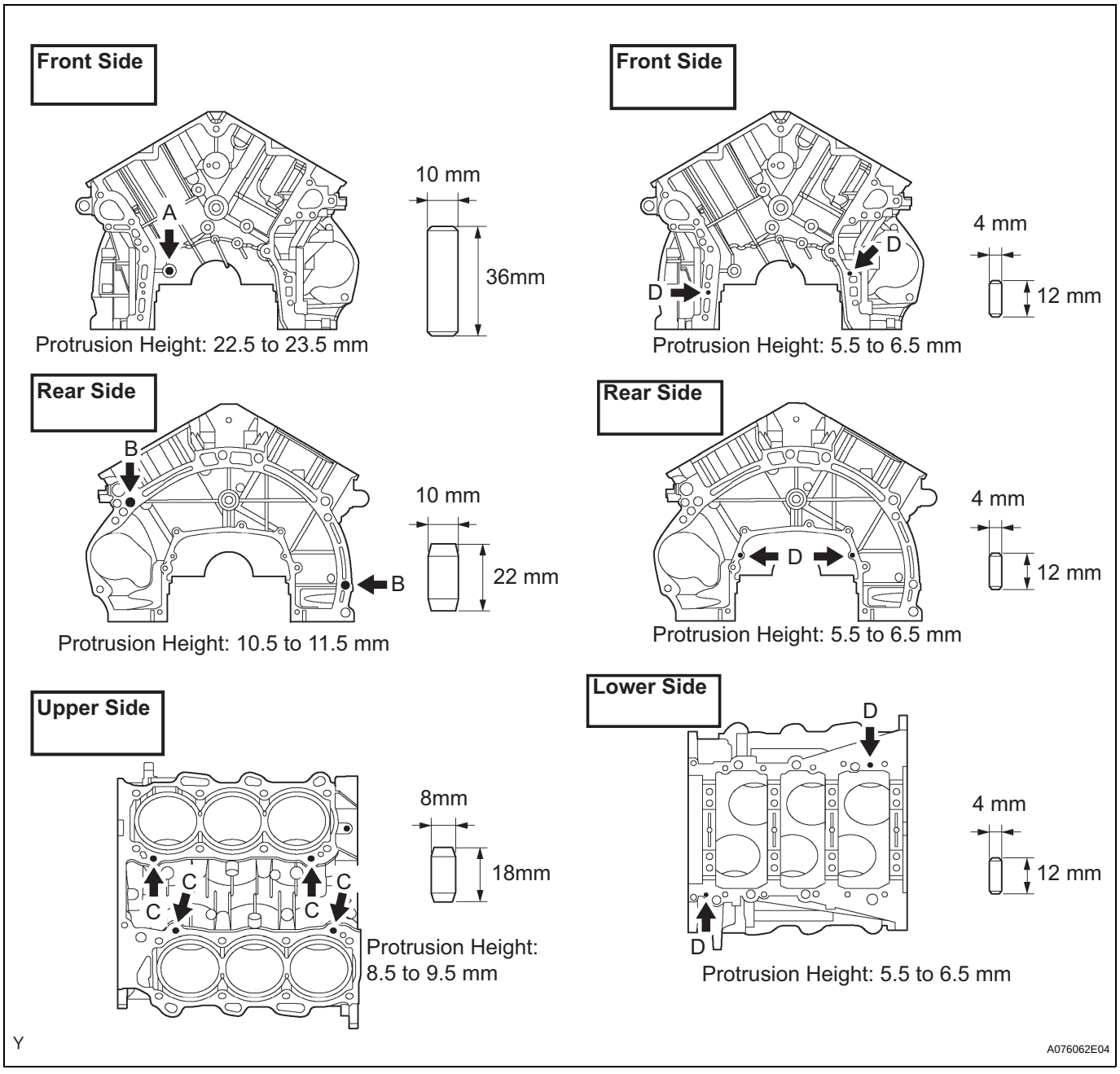

4. INSTALL TIGHT PLUG

(a) Apply adhesive around new tight plugs.
Adhesive:
Toyota Genuine Adhesive 1324, Three Bond 1324 or the equivalent

(b) Using SST, install the tight plugs as shown in the illustration.
SST 09550-60010 (09951-00350), 09950-70010 (09951-07150)

Standard depth:
0.2 to 1.2 mm (0.008 to 0.047 in.)

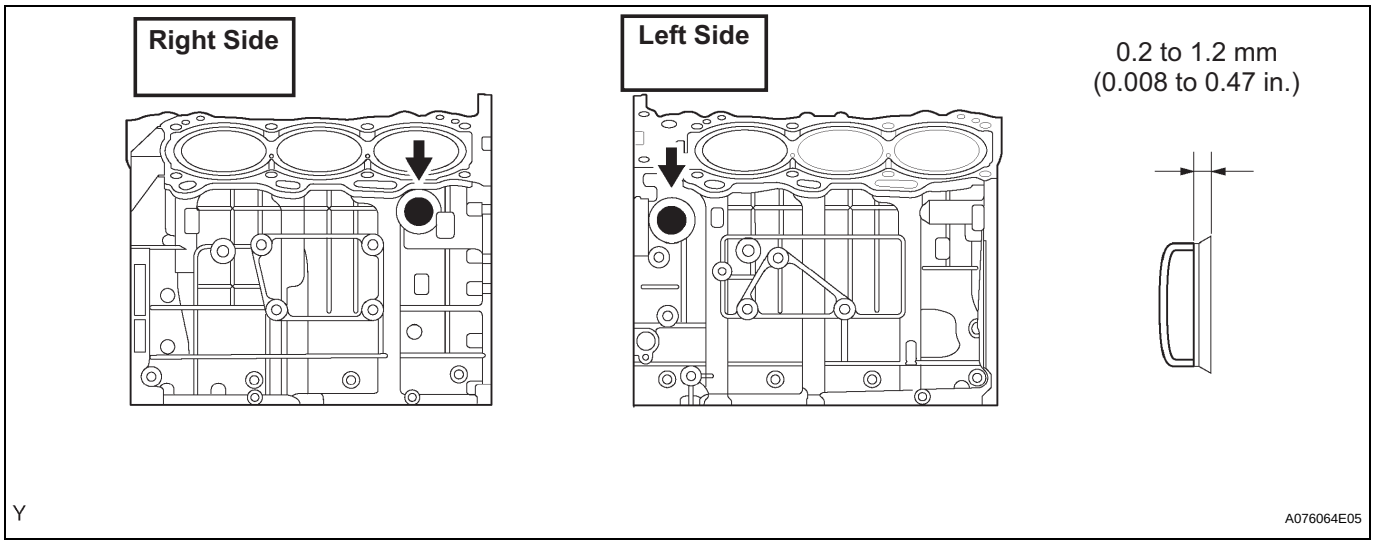

EM

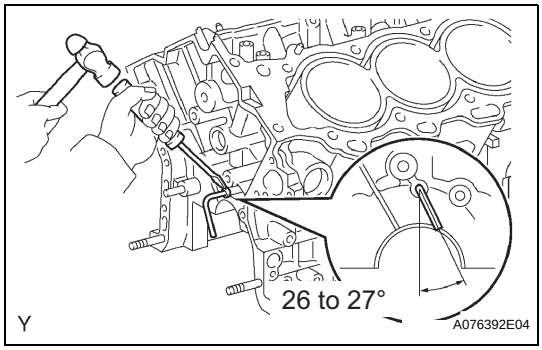

5. INSTALL OIL JET

(a) Using a screw driver and hammer, tap in the oil jet.

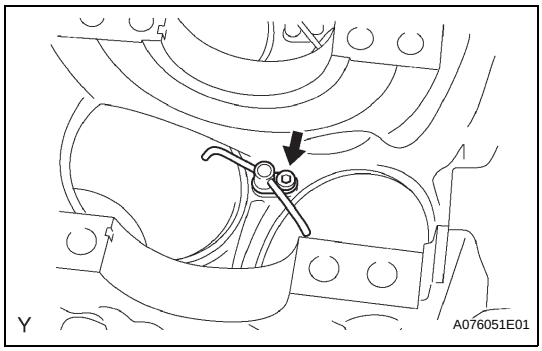

6. INSTALL NO. 1 SUB-ASSEMBLY OIL NOZZLE

(a) Using a 5 mm socket hexagon wrench, install the 3 oil nozzles.
Torque: 9.0 N*m (92 kgf*cm, 80 in.*lbf)

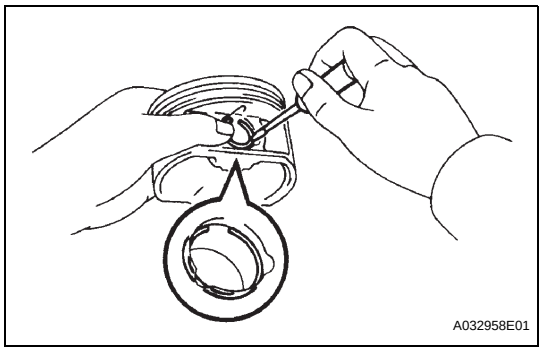

7. INSTALL HOLE SNAP RING

(a) Using a small screwdriver, install a new snap ring onto the side of the piston pin hole.
HINT:
Check that the end gap of the snap ring does not overlap with the pin hole cutout portion of the piston.

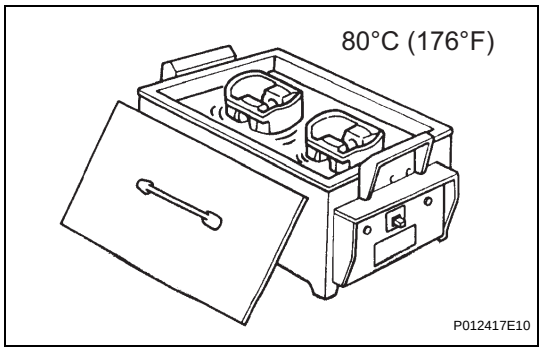

8. INSTALL WITH PIN PISTON SUB-ASSEMBLY

(a) Gradually heat the piston to about 80°C (176°F).

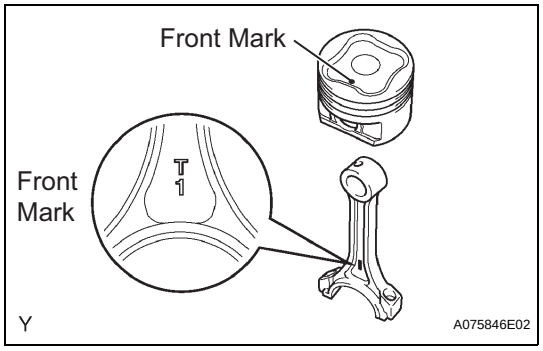

(b) Coat the piston pin with engine oil.

(c) Align the front marks of the piston and connecting rod, and push in the piston pin with a thumb.

EM

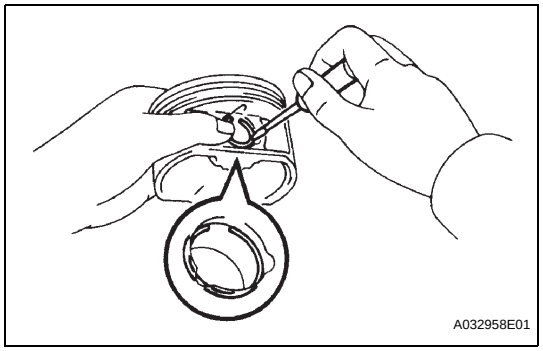

9. INSTALL HOLE SNAP RING

(a) Using a small screwdriver, install a new snap ring onto the other side of the piston pin hole.
HINT:
Make sure that the gap in the snap ring does not overlap with the pin hole cutout portion of the piston.

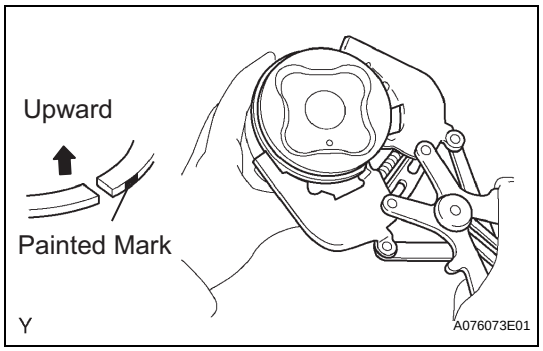

10. INSTALL PISTON RING SET

(a) Install the oil ring expander and 2 side rails by hand.

(b) Using a piston ring expander, install the 2 compression rings.
NOTICE:
Install compression ring No. 2 with the painted mark facing upward.

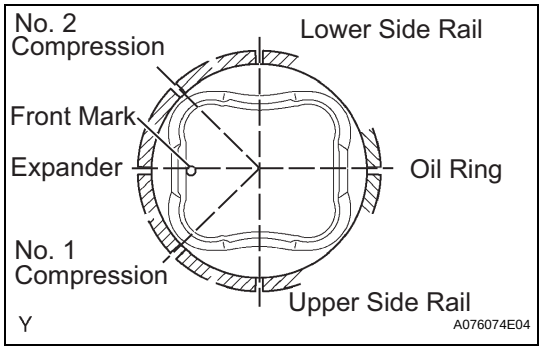

(c) Position the piston rings so that the ring ends are as shown.

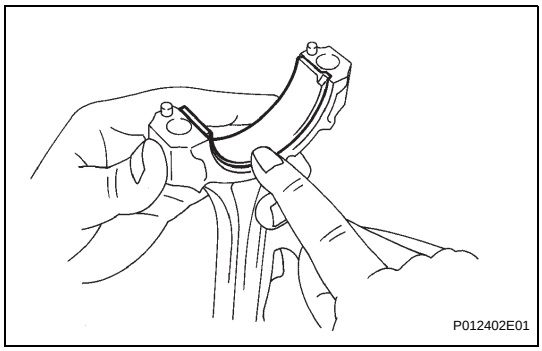

11. INSTALL CONNECTING ROD BEARING

(a) Align the bearing claw with the groove of the connecting rod or connecting cap.

NOTICE:

Clean the back side of the bearing and the bearing surface of the connecting rod and keep them free of oil.

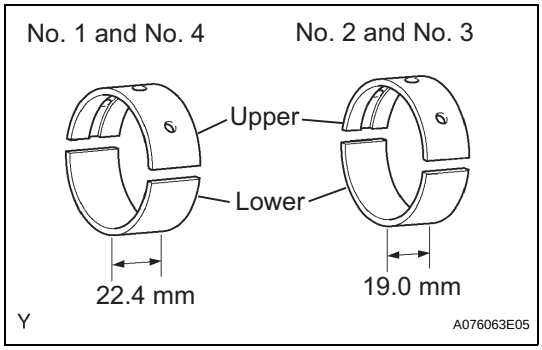

12. INSTALL CRANKSHAFT BEARING

HINT:

There are 2 types of main bearings with different widths (19.0 mm (0.748 in.) and 22.4 mm (0.882 in.)) for use in the inspection. Install the 22.4mm (0.882 in.) bearings in the No. 1 and No. 4 cylinder block journal positions with the main bearing cap. Install the 19.0 mm (0.748 in.) bearings in the No. 2 and No. 3 positions.

(a) Clean each main journal and bearing.

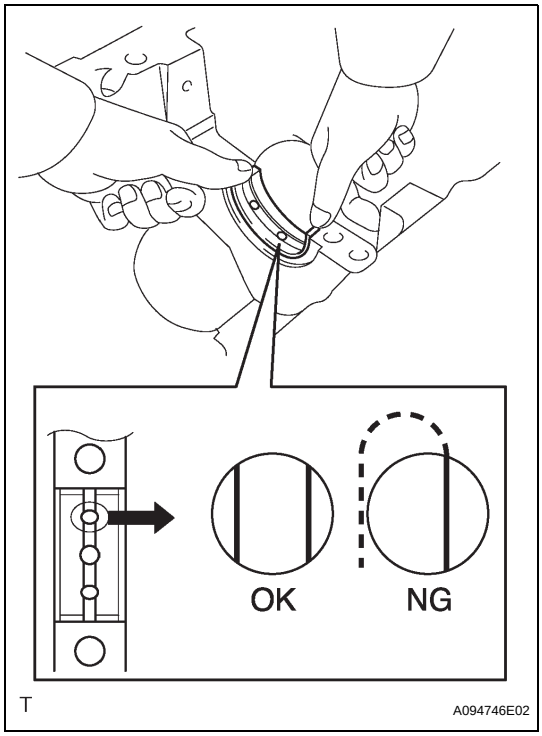

(b) Install the 4 upper bearings.

(1) Install the upper bearings near the center of the cylinder block.

NOTICE:

- **The widths of the No. 1 and No. 4 journal bearings are different from those of the No. 2 and No. 3 journal bearings. Therefore, confirm the identity of each journal bearing prior to installation.**
- **Do not apply engine oil to the bearing installation surfaces of the cylinder block and the back side of the bearings.**
- **Check that the oil groove on the cylinder block can be seen through the oil supply holes of the upper bearing.**

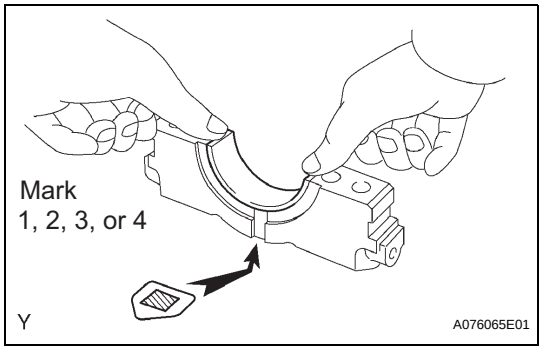

(c) Install the 4 lower bearings.

(1) Install the lower bearings near the center of the cylinder block.

NOTICE:

Do not apply engine oil to the bearing or its contact surface.

HINT:

The number marked on each main bearing cap indicates the installation position.

13. INSTALL CRANKSHAFT

(a) Apply engine oil to the upper bearing and install the crankshaft onto the cylinder block.

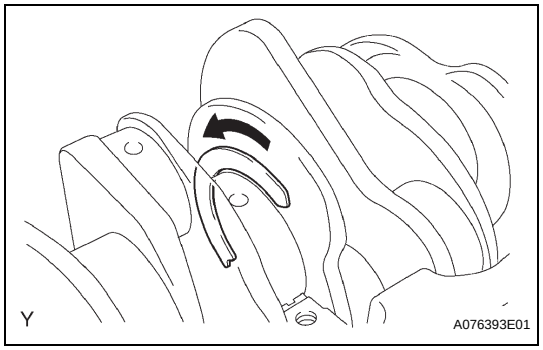

(b) Install the 2 upper thrust washers onto the No. 2 journal position of the cylinder block.
  (1) Push the crankshaft toward the front (rear) side.
  (2) Install the 2 upper thrust washers with the oil grooves facing outward.

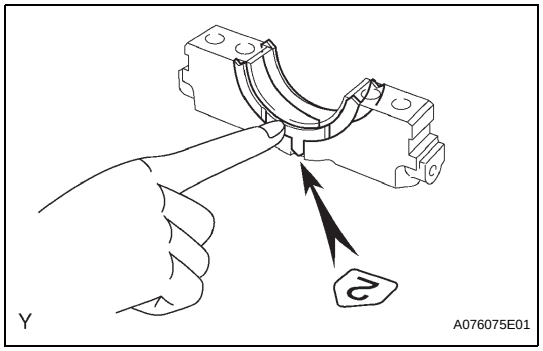

(c) Install the 2 lower thrust washers onto the No. 2 bearing cap with the grooves facing outward.

EM

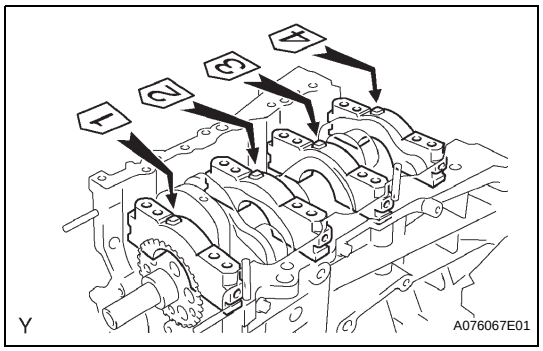

(d) Examine the front marks and numbers, check the sequence number is as shown in the illustration and install the bearing caps on the cylinder block.
(e) Apply a light coat of engine oil to the threads of the bearing cap bolts.
(f) Temporarily install the 8 main bearing cap bolts in the inside positions.

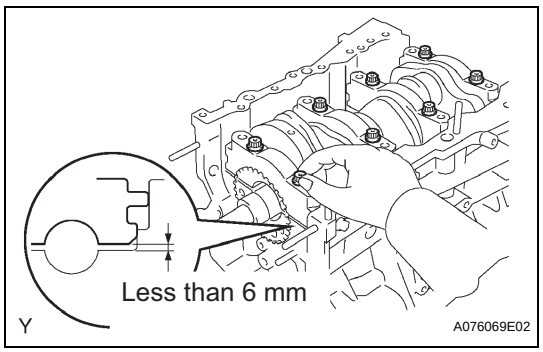

(g) Install the main bearing caps. Tighten the 2 bolts for each bearing cap until the clearance between the bearing cap and the cylinder block is under 6 mm (0.23 in.).

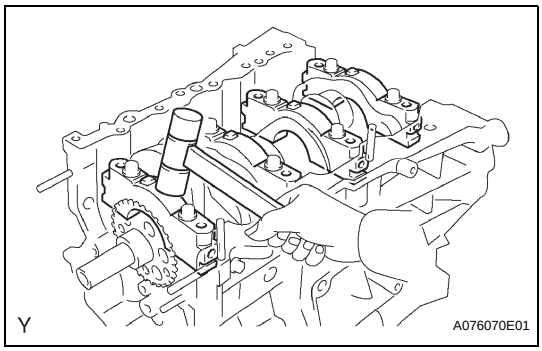

(h) Using a plastic-faced hammer, lightly tap the bearing cap to ensure a proper fit.
(i) Apply a light coat of engine oil to the threads of the main bearing cap bolts.

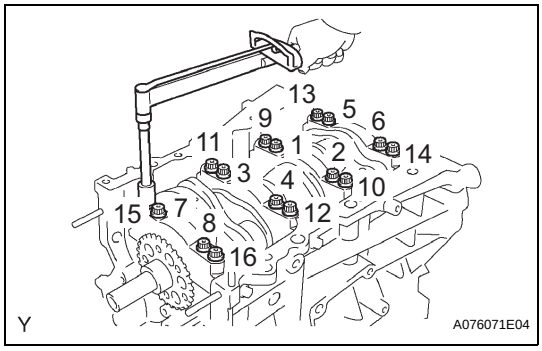

(j) Install the 16 main bearing cap bolts. Using several steps, tighten the bolts uniformly in the sequence shown in the illustration.
Torque: 61 N*m (622 kgf*cm, 45 ft.*lbf)

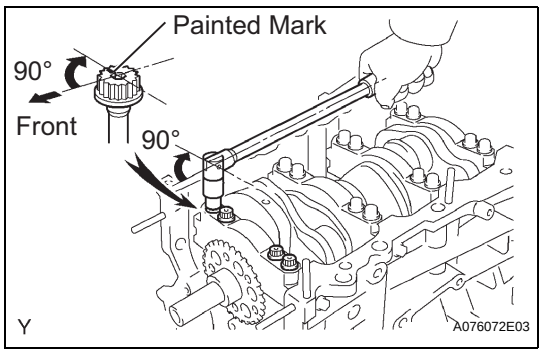

(k) Mark the front side of the bearing cap bolts with paint.
(l) Retighten the bearing cap bolts 90° in the sequence as shown.
(m) Check that the painted marks are now at a 90° angle from the front.
(n) Check that the crankshaft turns smoothly.

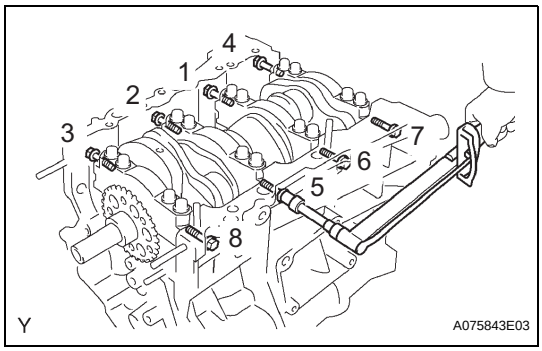

(o) Using several steps, tighten the 8 main bearing cap bolts uniformly in the sequence shown in the illustration.
Torque: 25 N*m (255 kgf*cm, 18 ft.*lbf)

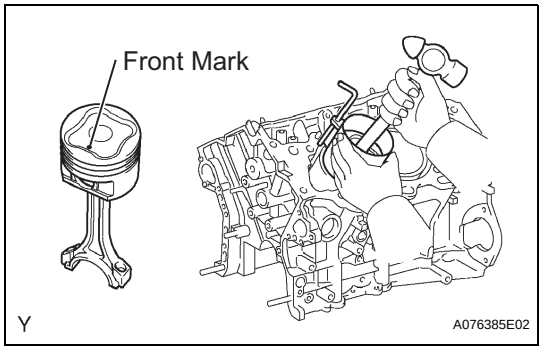

14. INSTALL PISTON SUB-ASSEMBLY WITH CONNECTIONG ROD

(a) Apply engine oil to the cylinder walls, pistons, and surfaces of connecting rod bearings.
(b) Check the position of the piston ring ends.

(c) Using a piston ring compressor, push the correct number piston and connecting rod into each cylinder with the front mark of the piston facing forward.
NOTICE:
- **Clean the back side of the bearing and the bearing surface of the connecting rod cap and keep them free of oil.**
- **Match the numbered connecting rod cap with the connecting rod.**

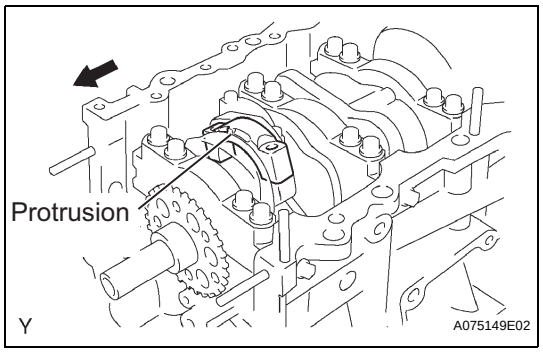

(d) Check that the protrusion of the connecting rod cap is facing in the correct direction.

(e) Apply a light coat of engine oil to the threads of the connecting rod cap bolts.

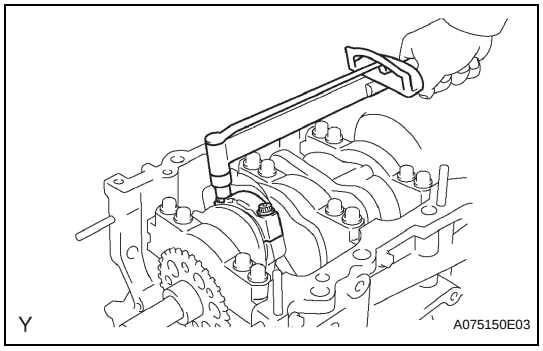

(f) Tighten the bolts alternately to the specified torque.
Torque: 25 N*m (250 kgf*cm, 18 ft.*lbf)

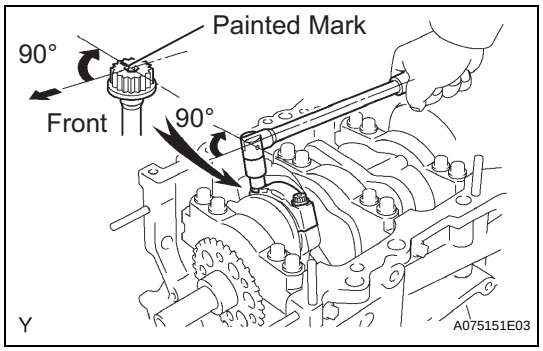

(g) Mark the front side of the each connecting cap bolt with paint.

(h) Retighten the cap bolts 90° as shown.

(i) Check that the crankshaft turns smoothly.

15. INSTALL REAR ENGINE OIL SEAL RETAINER

(a) Remove any old packing material and oil from the contact surfaces of the oil seal retainer and cylinder block.

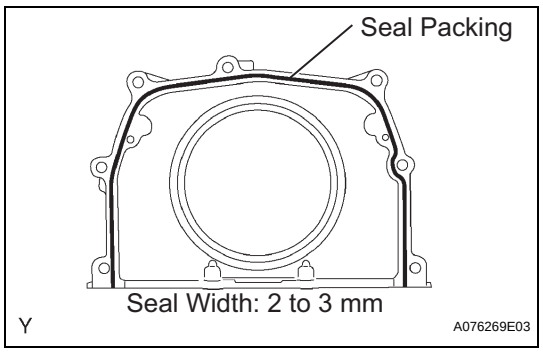

(b) Apply a continuous bead of seal packing (diameter 2 to 3 mm (0.08 to 0.12 in.)) to the oil seal retainer as shown in the illustration.
Seal packing:
Toyota Genuine Seal Packing Black, Three Bond 1207B or the equivalent
NOTICE:
Parts must be assembled within 3 minutes of application. Otherwise, the seal packing must be removed and reapplied.

(c) Install the oil seal retainer with the 5 bolts and 2 nuts.
Torque: Nut
9.0 N*m (92 kgf*cm, 80 in.*lbf)
Bolt
10 N*m (102 kgf*cm, 7.4 ft.*lbf)

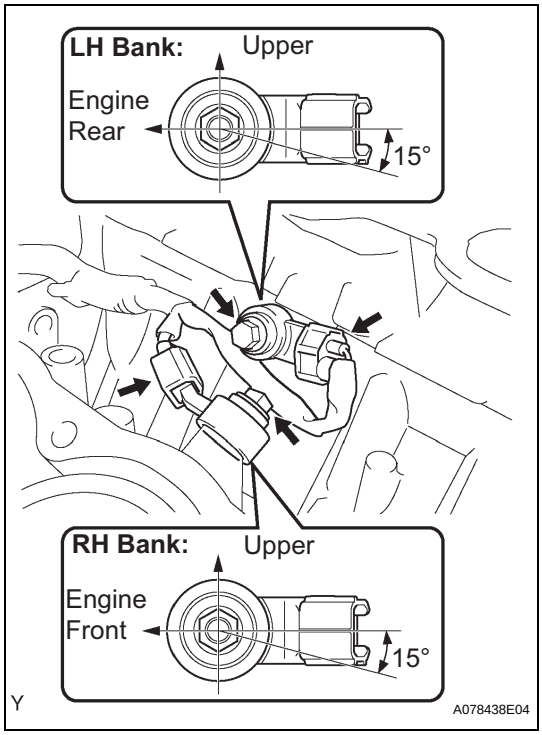

16. INSTALL KNOCK SENSOR
(a) Install the 2 knock sensors with the 2 bolts as shown in the illustration.
Torque: 20 N*m (204 kgf*cm, 15 ft.*lbf)
(b) Connect the knock sensor connectors.
(c) Install the knock sensor wire.

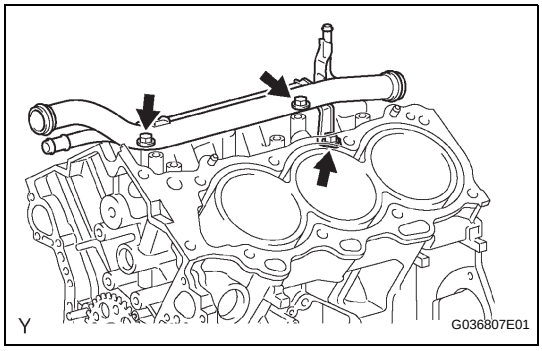

17. INSTALL NO. 1 WATER OUTLET PIPE
(a) Install the water outlet pipe with the 3 bolts.
Torque: 10 N*m (102 kgf*cm, 7.4 ft.*lbf)

18. INSTALL CYLINDER HEAD GASKET
(a) Remove any old packing material and oil from the contact surfaces of the cylinder head and cylinder block.

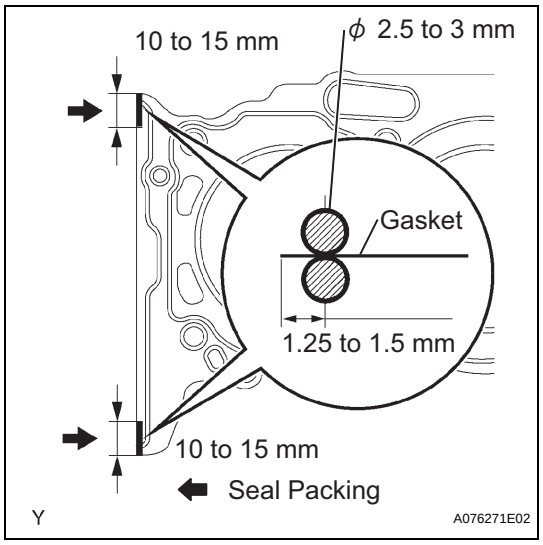

(b) Apply a continuous bead of seal packing (diameter 2.5 to 3 mm (0.098 to 0.118 in.)) to a new cylinder head gasket as shown in the illustration.
Seal packing:
Toyota Genuine Seal Packing Black, Three Bond 1207B or the equivalent
NOTICE:
Install the cylinder head within 3 minutes of applying the seal packing. After installation, cylinder head bolts must be tightened within 15 minutes. Otherwise, the seal packing must be removed and reapplied.

EM

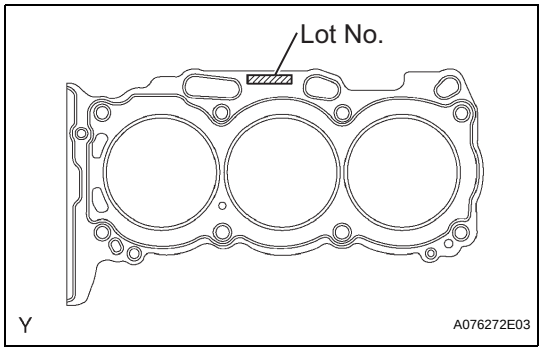

(c) Place the cylinder head gasket on the cylinder block surface with the Lot No. stamp upward.
NOTICE:
- **Install the cylinder head gasket in the correct direction.**
- **Place the cylinder head carefully in order not to damage the gasket with the bottom part of the head.**

19. INSTALL CYLINDER HEAD SUB-ASSEMBLY

(a) Place the cylinder head RH on the cylinder head gasket.

(b) Install the 8 cylinder head bolts.
HINT:
- The cylinder head bolts are tightened in 2 successive steps (steps (*1), (*2) and (*3)).
- If any cylinder head bolts are broken or deformed, replace them.

(1) Apply a light coat of engine oil to the threads and under the heads of the cylinder head bolts.

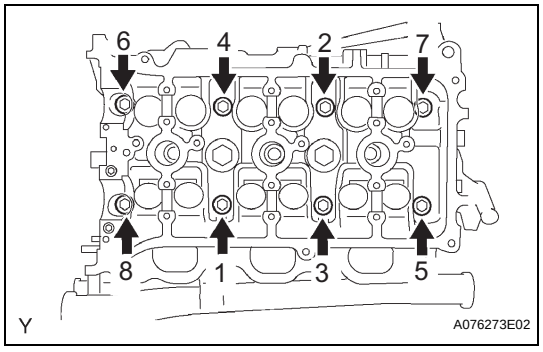

(2) Using several steps, uniformly install and tighten the 10 cylinder head bolts and plate washers with a bi-hexagon wrench 10 mm in the sequence shown in the illustration.
Torque: 36 N*m (367 kgf*cm, 27 ft.*lbf)
If any cylinder head bolts do not meet the torque specification, replace them.
NOTICE:
Do not drop the washers into the cylinder head.

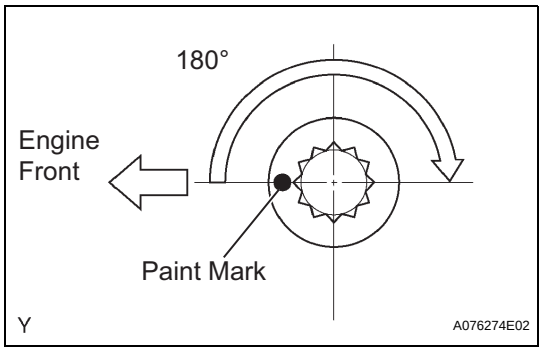

(3) Mark the front of the cylinder head bolt with paint. (*1)
(4) Retighten the cylinder head bolts by 180° as shown. (*2)
(5) Check that the painted marks are now at 180° from the engine front. (*3)

20. INSTALL NO. 2 CYLINDER HEAD GASKET

(a) Remove any old packing material and oil from the contact surfaces of the cylinder head and cylinder block.

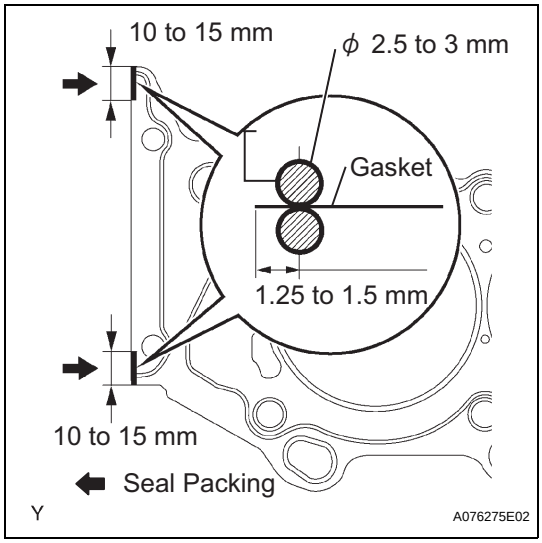

(b) Apply a continuous bead of seal packing (Diameter 2.5 to 3 mm (0.098 to 0.118 in.)) to a new cylinder head gasket as shown in the illustration.
Seal packing:
Toyota Genuine Seal Packing Black, Three Bond 1207B or the equivalent
NOTICE:
Install the cylinder head within 3 minutes of applying the seal packing. After installation, cylinder head bolts must be tightened within 15 minutes. Otherwise, the seal packing must be removed and reapplied.

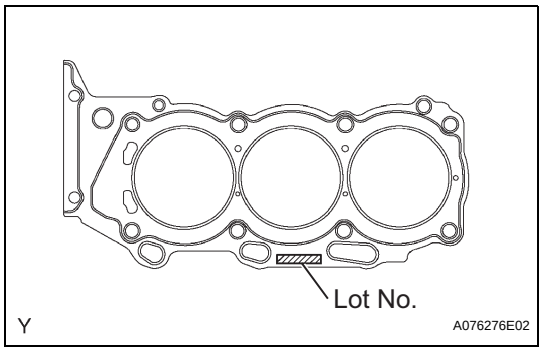

(c) Place the cylinder head gasket on the cylinder block surface with the Lot No. stamp upward.
NOTICE:
- **Be careful of the installation direction.**
- **Place the cylinder head carefully in order not to damage the gasket with the bottom part of the head.**

21. INSTALL CYLINDER HEAD LH

(a) Place the cylinder head LH on the cylinder head gasket.
(b) Install the 8 cylinder head bolts.
HINT:
- The cylinder head bolts are tightened in 2 successive steps (steps (*4), (*5) and (*6)).
- If any cylinder head bolts are broken or deformed, replace them.

(1) Apply a light coat of engine oil to the threads and under the heads of the cylinder head bolts.

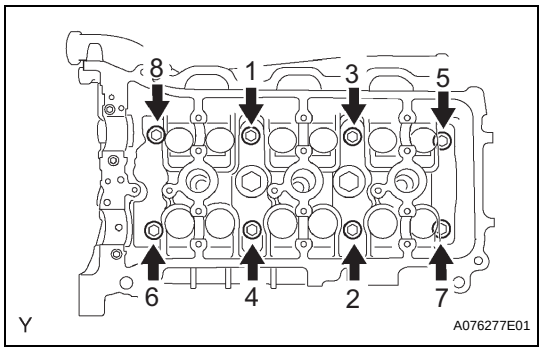

(2) Using several steps, uniformly install and tighten the 8 cylinder head bolts and plate washers with a bi-hexagon wrench 10 mm in the sequence shown in the illustration.
Torque: 36 N*m (367 kgf*cm, 27 ft.*lbf)
If any cylinder head bolts do not meet the torque specification, replace them.
NOTICE:
Do not drop the washers into the cylinder head.

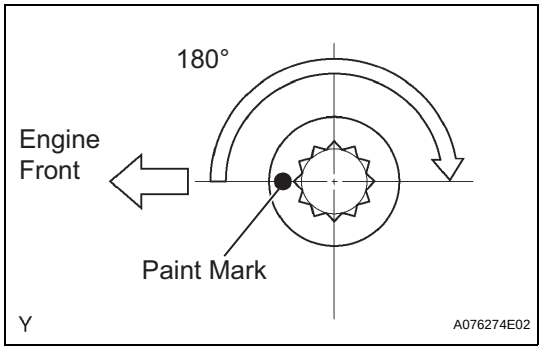

(3) Mark the front of the cylinder head bolt with paint. (*4)
(4) Retighten the cylinder head bolts by 180° as shown. (*5)
(5) Check that the painted marks are now at 180° from the engine front. (*6)

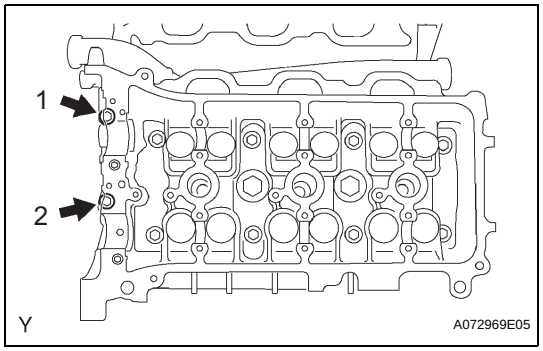

(c) Install the 2 cylinder head bolts.
(1) Apply a light coat of engine oil to the threads of the cylinder head bolts.
(2) Using several steps, uniformly install and tighten the 10 cylinder head bolts and plate washers with a bi-hexagon wrench 10 mm in the sequence shown in the illustration.
Torque: 30 N*m (306 kgf*cm, 22 ft.*lbf)

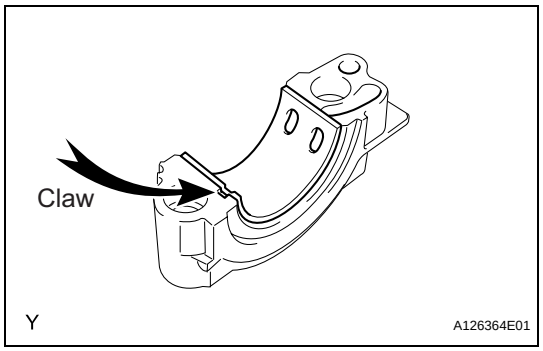

22. INSTALL NO. 1 CAMSHAFT BEARING
(a) Align the bearing claw with the claw groove of the bearing cap, and push in the camshaft bearing.
NOTICE:
- **Install the bearing while aligning it with the oil hole in the bearing cap.**
- **Clean the back side of the bearing and the surface of the bearing cap and keep them free of oil.**

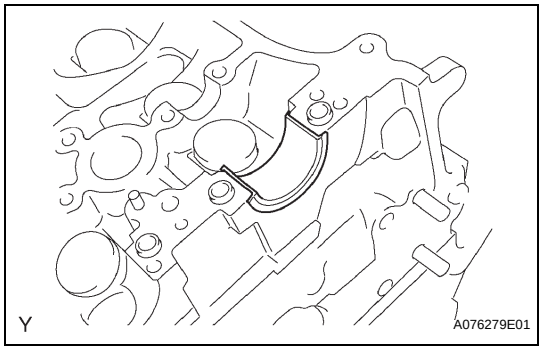

23. INSTALL NO. 2 CAMSHAFT BEARING
(a) Install the No. 2 camshaft bearing onto the cylinder head.
NOTICE:
Clean the back side of the bearing and the bearing surface of the cylinder head and keep them free of oil.

EM

24. INSTALL CAMSHAFTS

NOTICE:

Keep the camshaft level while it is being removed. The camshaft thrust clearance is very small and failing to keep it level could crack or damage the cylinder head journal surface, which receives the thrust force. This could subsequently lead the camshaft to seize or break. Perform the following steps to avoid such problems.

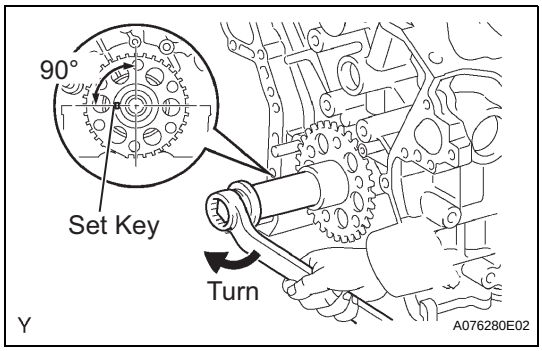

(a) Set the crankshaft position.

(1) Using the crankshaft pulley set bolt, turn the crankshaft, and set the crankshaft set key in the left horizontal position as indicated.

NOTICE:

Setting the crankshaft at the wrong angle could cause the piston head and valve head to come into contact with each other when the camshaft is installed. This could cause damage, so always set the camshaft at the correct angle.

(b) Apply new engine oil to the thrust portion and journal of the camshafts.

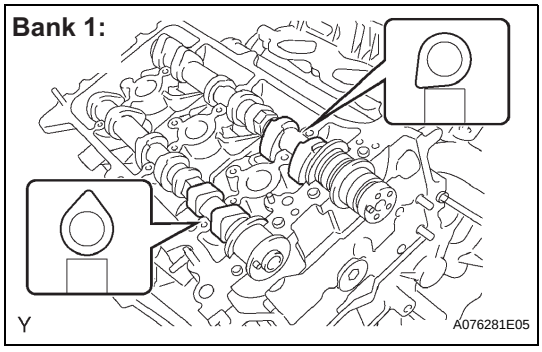

(c) Install the camshafts of bank 1.

(1) Place the 2 camshafts on the cylinder head RH with the No. 1 cam lobes facing as shown the illustration.

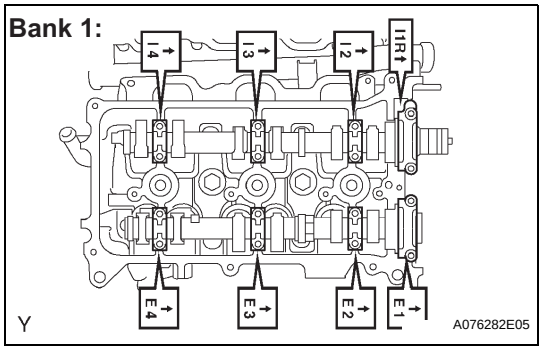

(2) Install the 8 bearing caps in their correct locations.

(3) Apply a light coat of engine oil to the threads of the bearing cap bolts.

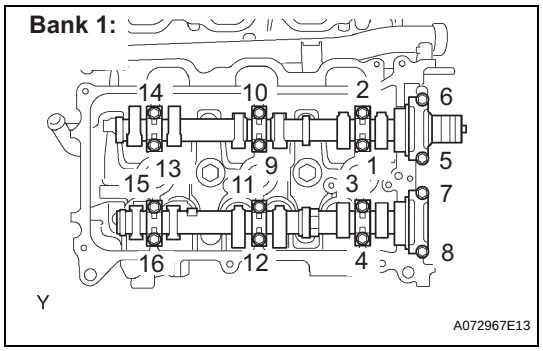

(4) Using several steps, uniformly tighten the 16 bearing cap bolts in the sequence shown in the illustration.

Torque: 10 mm (0.39 in.) head
9.0 N*m (92 kgf*cm, 80 in.*lbf)
12 mm (0.47 in.) head
24 N*m (245 kgf*cm, 18 ft.*lbf)

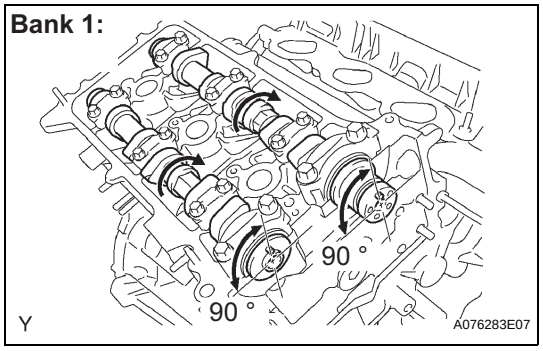

(5) Using a wrench, turn the camshafts clockwise until each camshaft knock pin comes to a position 90° to the cylinder head.

EM

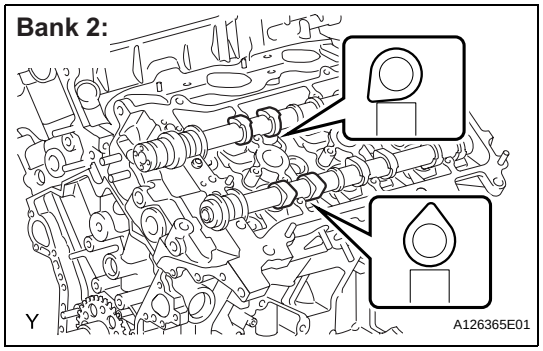

(d) Install the camshafts of bank 2.

(1) Place the 2 camshafts on the cylinder head LH with the No.1 cam lobes facing as shown the illustration.

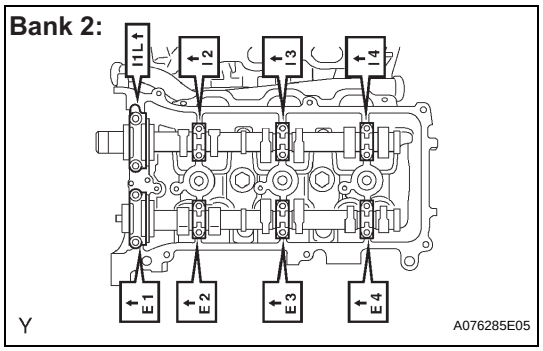

(2) Install the 8 bearing caps in the correct locations as shown.

(3) Apply a light coat of engine oil to the threads and under the heads of the bearing cap bolts.

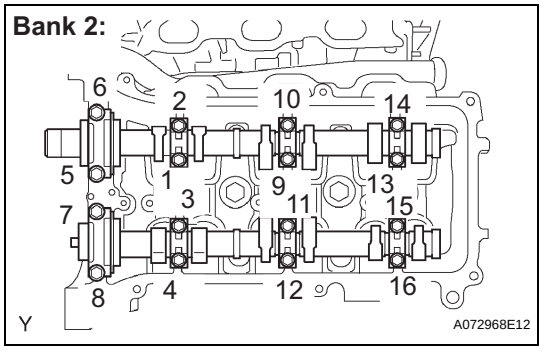

(4) Using several steps, uniformly tighten the 16 bearing cap bolts in the sequence shown in the illustration.

Torque: 10 mm (0.39 in.) head
9.0 N*m (92 kgf*cm, 80 in.*lbf)
12 mm (0.47 in.) head
24 N*m (245 kgf*cm, 18 ft.*lbf)

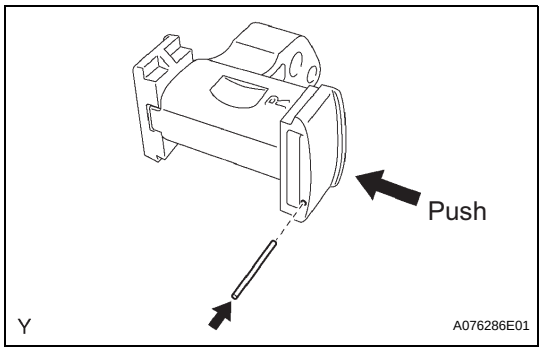

25. INSTALL NO. 2 CHAIN TENSIONER ASSEMBLY

(a) While pushing in the tensioner, insert a pin of ϕ 1.0 mm (0.039 in.) into the hole to fix it.

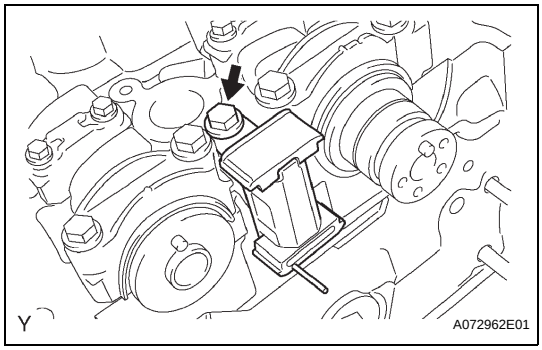

(b) Install chain tensioner No. 2 with the bolt.
Torque: 19 N*m (194 kgf*cm, 14 ft.*lbf)

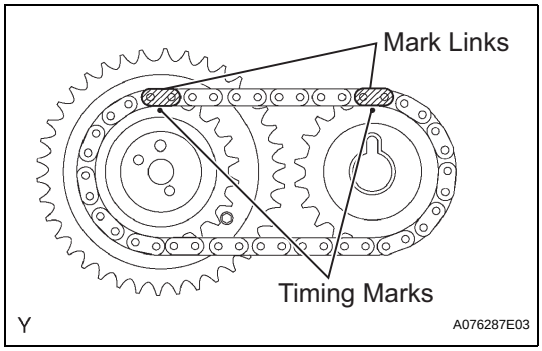

26. INSTALL CAMSHAFT TIMING GEARS AND NO. 2 CHAIN (for Bank 1)

(a) Align the yellow mark links with the timing marks (1 dot mark) of camshaft timing gears as shown in the illustration.

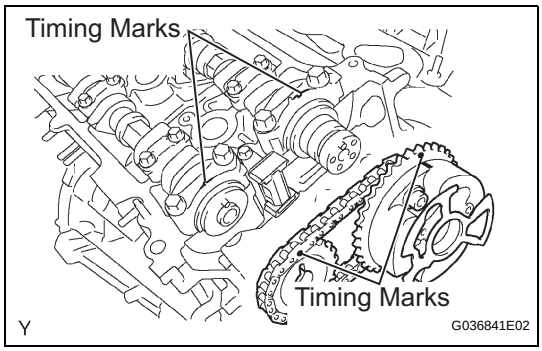

(b) Align the timing marks on the camshaft timing gears with the timing marks on the bearing caps, and install the camshaft timing gears with the chain onto the bank 1 camshafts.

(c) Temporarily install the 2 camshaft timing gear bolts.
NOTICE:
Do not push the camshaft timing gear assembly onto the camshaft forcibly when installing it.

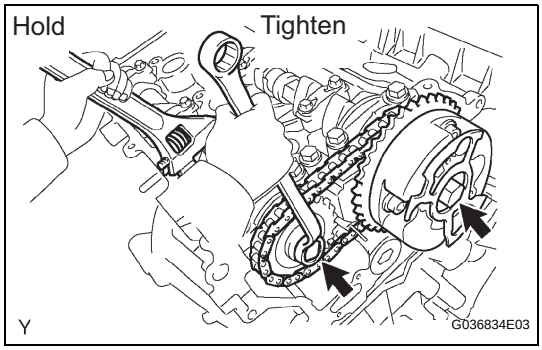

(d) Hold the hexagonal portion of the camshaft with a wrench, and tighten the 2 bolts.
Torque: 100 N*m (1,020 kgf*cm, 74 ft.*lbf)

(e) Remove the pin from chain tensioner No. 2.

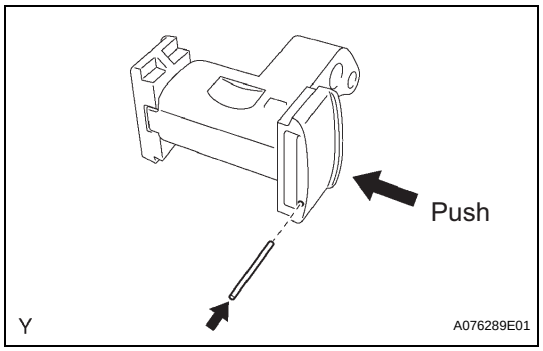

27. INSTALL NO. 3 CHAIN TENSIONER ASSEMBLY

(a) While pushing in the tensioner, insert a pin of ϕ 1.0 mm (0.039 in.) into the hole to hold it.

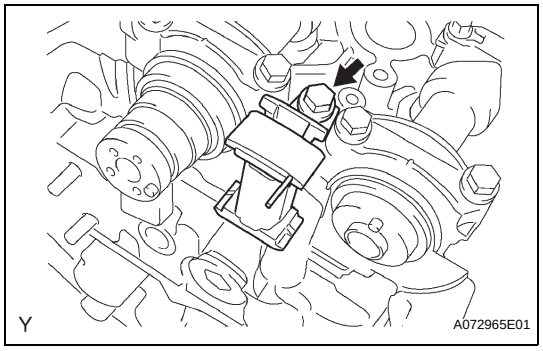

(b) Install chain tensioner No. 3 with the bolt.
Torque: 19 N*m (194 kgf*cm, 14 ft.*lbf)

EM

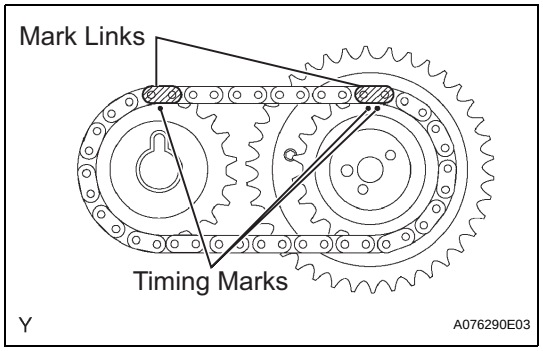

28. INSTALL CAMSHAFT TIMING GEARS AND NO. 2 CHAIN (for Bank 2)

(a) Align the yellow mark links with the timing marks (1 dot mark and 2 dot marks) on the camshaft timing gears as shown in the illustration.

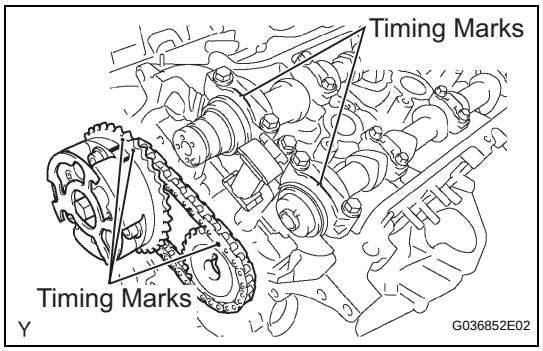

(b) Align the timing marks on the camshaft timing gears with the timing marks on the bearing caps, and install the camshaft timing gears with the chain onto the bank 2 camshafts.

(c) Temporarily install the 2 camshaft timing gear bolts.
NOTICE:
Do not push the camshaft timing gear assembly onto the camshaft forcibly when installing it.

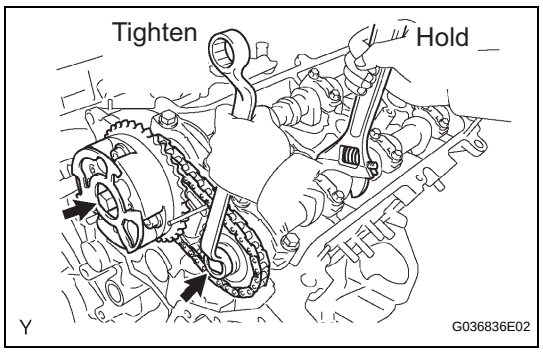

(d) Hold the hexagonal portion of the camshaft with a wrench, and tighten the 2 bolts.
Torque: 100 N*m (1,020 kgf*cm, 74 ft.*lbf)

(e) Remove the pin from chain tensioner No. 3.

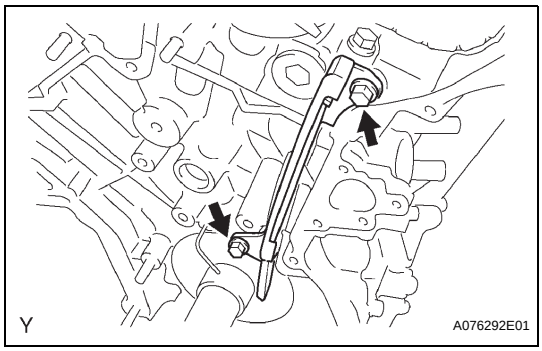

29. INSTALL NO. 1 CHAIN VIBRATION DAMPER

(a) Install chain vibration damper No. 1 with the 2 bolts.
Torque: 19 N*m (194 kgf*cm, 14 ft.*lbf)

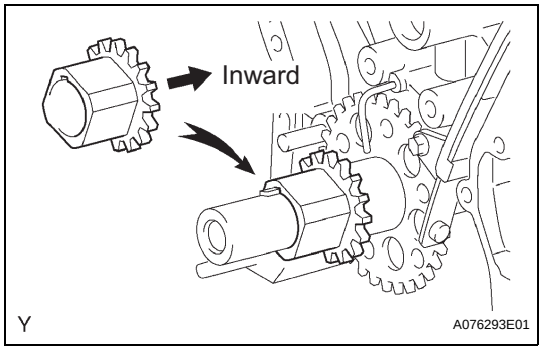

30. INSTALL CRANKSHAFT TIMING GEAR OR SPROCKET

(a) Align the timing gear set key with the key groove of the timing gear.
(b) Install the timing gear onto the crankshaft with the gear side facing inward.

31. INSTALL CHAIN TENSIONER SLIPPER

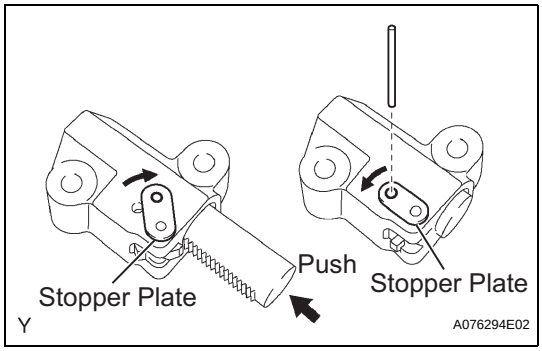

32. INSTALL NO. 1 CHAIN TENSIONER ASSEMBLY

(a) While turning the stopper plate of the tensioner clockwise, push in the plunger of the tensioner as shown in the illustration.
(b) While turning the stopper plate of the tensioner counterclockwise, insert a bar of ϕ 3.5 mm (0.138 in.) into the holes in the stopper plate and tensioner to fix the stopper plate.
(c) Install the chain tensioner with the 2 bolts.
Torque: 10 N*m (102 kgf*cm, 7.4 ft.*lbf)

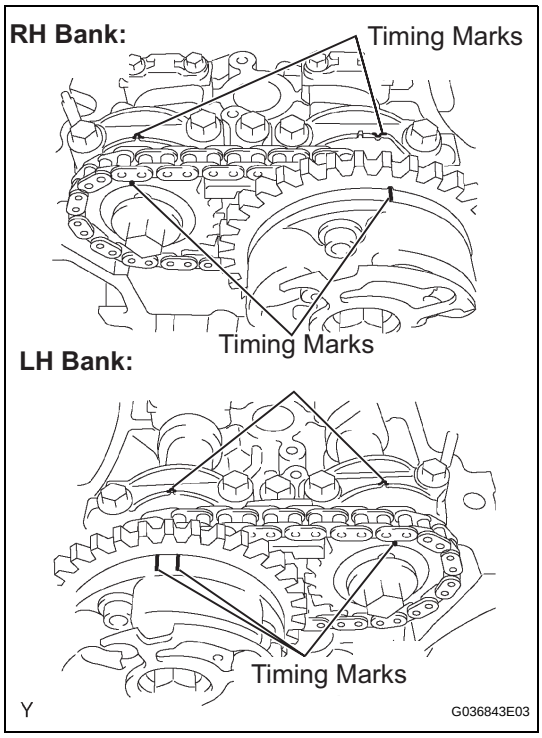

33. INSTALL CHAIN SUB-ASSEMBLY

(a) Set the No. 1 cylinder to TDC/ compression.
(1) Align the timing marks of the camshaft timing gears and bearing caps.

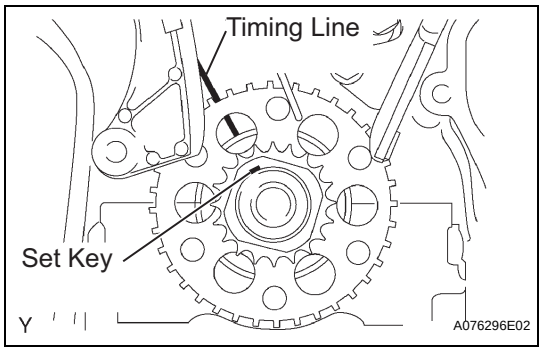

(2) Using the crankshaft pulley set bolt, turn the crankshaft to align the crankshaft set key with the timing line of the cylinder block.

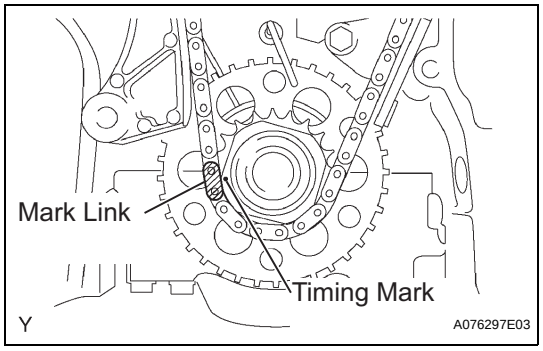

(b) Align the yellow mark link with the timing mark of the crankshaft timing gear.

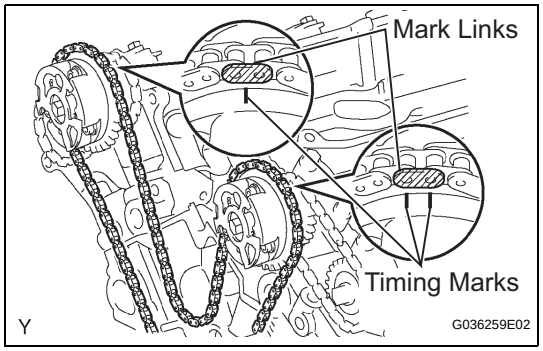

(c) Align the orange mark links with the timing marks of the camshaft timing gears, and install the chain.

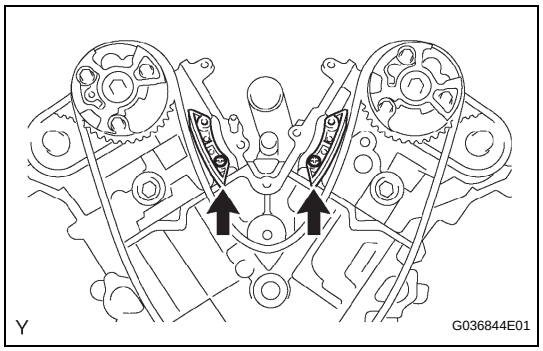

34. INSTALL NO. 2 CHAIN VIBRATION DAMPER

(a) Instal the 2 No. 2 chain vibration dampers.

35. INSTALL IDLE SPROCKET ASSEMBLY

(a) Apply a light coat of engine oil to the rotating surface of idle gear shaft No. 1.

EM

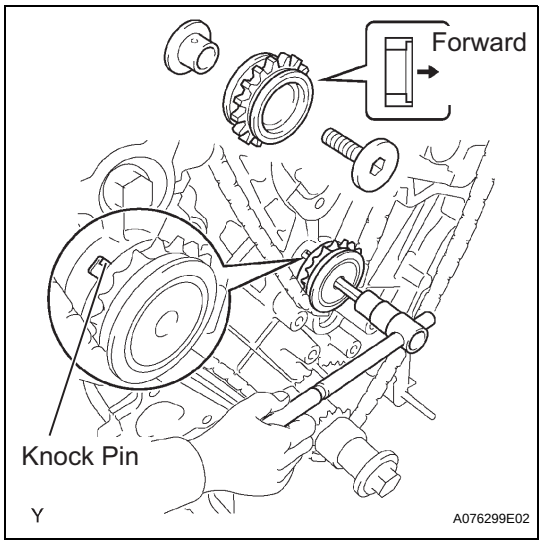

(b) Temporarily install idle gear shaft No. 1 together with idle gear shaft No. 2 while aligning the knock pin of idle gear shaft No. 1 with the knock pin groove of the cylinder block.
NOTICE:
Install the idle gear in the correct direction.

(c) Using a 10 mm hexagon wrench, tighten idle gear shaft No. 2.
Torque: 60 N*m (612 kgf*cm, 44 ft.*lbf)

(d) Remove the bar from the chain tensioner.

36. INSTALL TIMING CHAIN OR BELT COVER SUB-ASSEMBLY

(a) Remove any old packing material and oil from the contact surfaces of the timing chain cover, cylinder head and cylinder block.

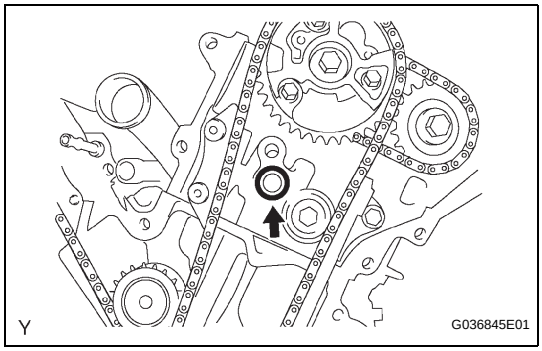

(b) Install a new O-ring onto the cylinder head LH as shown in the illustration.

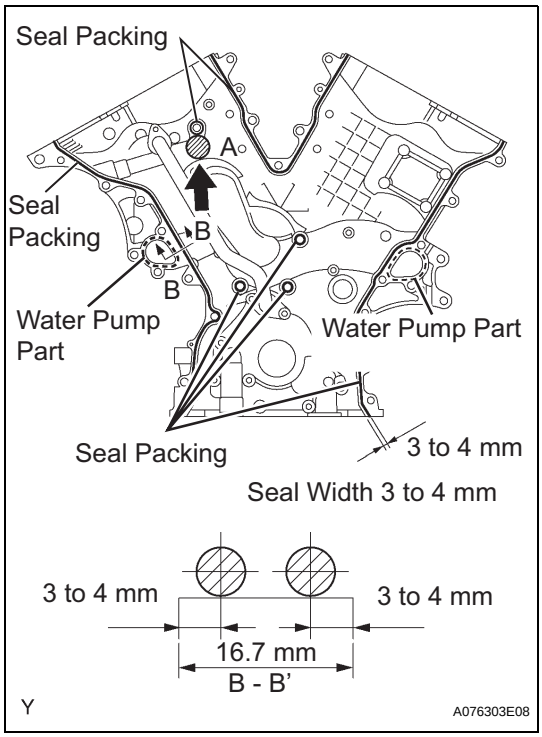

(c) Apply a continuous bead of seal packing (diameter 3 to 4 mm (0.12 to 0.16 in.)) to the timing chain cover as shown in the illustration.
Seal packing:
Water pump part:
Toyota Genuine Seal Packing 1282B, Three Bond 1282B or the equivalent
Other parts:
Toyota Genuine Seal Packing Black, Three Bond 1207B or the equivalent
NOTICE:
- **Install the timing chain cover within 3 minutes of applying the seal packing. After installation, the timing chain cover bolts and nuts must be tightened within 15 minutes. Otherwise, the seal packing must be removed and reapplied.**
- **Do not apply seal packing to A as shown in the illustration.**

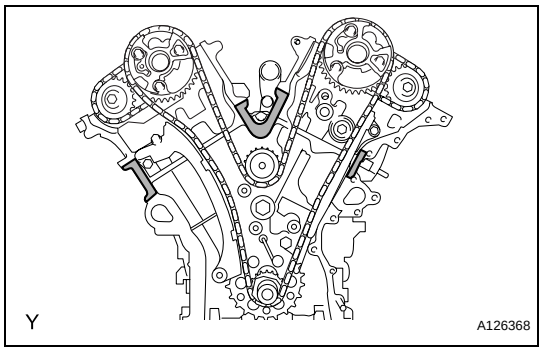

(d) Keep the seal surface between the cylinder block and the cylinder head shown in the illustration free of oil before installing the chain cover.

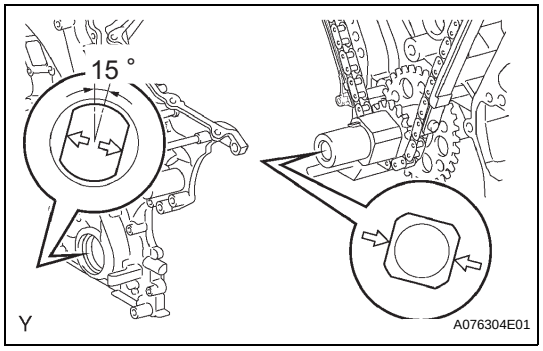

(e) Align the key way of the oil pump drive rotor with the rectangular portion of the crankshaft timing gear, and slide the timing chain cover into place.

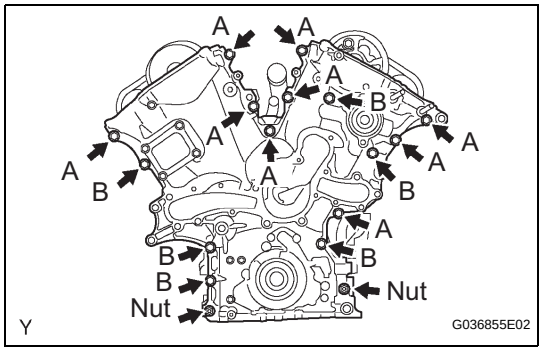

(f) Install the timing chain cover with the 15 bolts and 2 nuts. Tighten the bolts and nuts uniformly in several steps.
Torque: 23 N*m (235 kgf*cm, 17 ft.*lbf)
NOTICE:
- **Do not wrap the chain and slipper beyond the timing chain cover seal line.**
- **After installing the timing chain cover, install the water pump within 15 minutes.**

HINT:
Each bolt length is as follows:

Bolt	length
A	25 mm (0.98 in.)
B	55 mm (2.17 in.)

(g) Install the timing chain cover plate with the 4 bolts.
Torque: 9.0 N*m (92 kgf*cm, 80 in.*lbf)

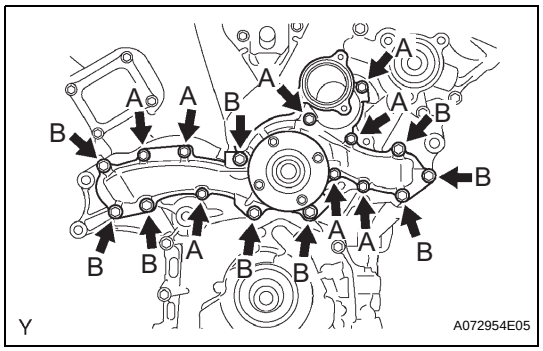

37. INSTALL WATER PUMP ASSEMBLY

(a) Install a new gasket and the water pump with the 17 bolts.
Torque: Bolt A
9.0 N*m (92 kgf*cm, 80 in.*lbf)
Bolt B
23 N*m (235 kgf*cm, 17 ft.*lbf)

38. INSTALL OIL PAN SUB-ASSEMBLY

(a) Remove any old packing material and oil from the contact surfaces of the cylinder block, rear oil seal retainer and oil pan.

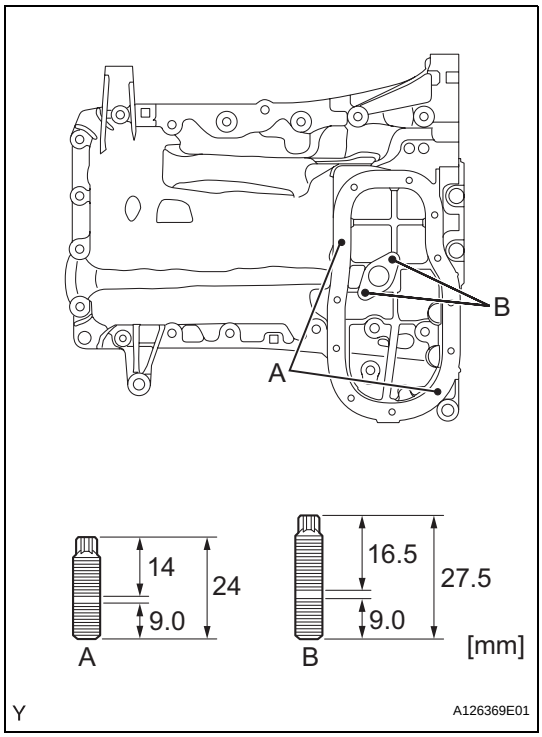

(b) Install the 4 stud bolts.
Torque: 4.0 N*m (41 kgf*cm, 35 in.*lbf)

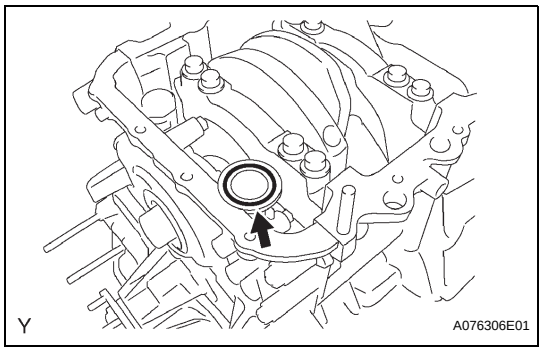

(c) Install a new O-ring onto the oil pump.

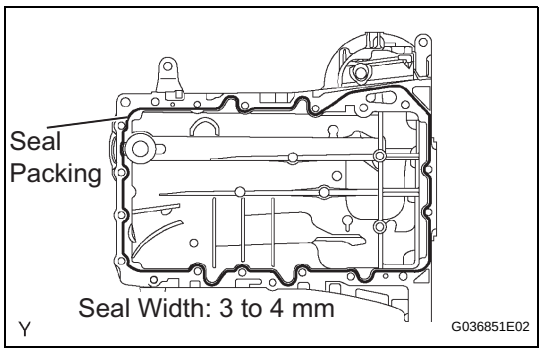

(d) Apply a continuous bead of seal packing (diameter 3 to 4 mm (0.12 to 0.16 in.)) to the oil pan as shown in the illustration.
Seal packing:
Toyota Genuine Seal Packing Black, Three Bond 1207B or the equivalent
NOTICE:
Install the oil pan within 3 minutes of applying the seal packing. After installation, the oil pan bolts and nuts must be tightened within 15 minutes. Otherwise, the seal packing must be removed and reapplied.

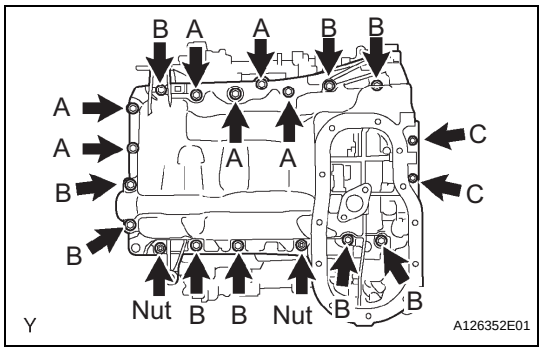

(e) Install the oil pan with the 17 bolts and 2 nuts. Tighten the bolts and nuts uniformly in several steps.

Torque: 10 mm (0.39 in.) head
10 N*m (102 kgf*cm, 7 ft.*lbf)
12 mm (0.47 in.) head
21 N*m (214 kgf*cm, 16 ft.*lbf)

HINT:
Each bolt length is as follows:

Bolt	length
A	25 mm (0.98 in.)
B	45 mm (1.77 in.)
C	14 mm (0.55 in.)

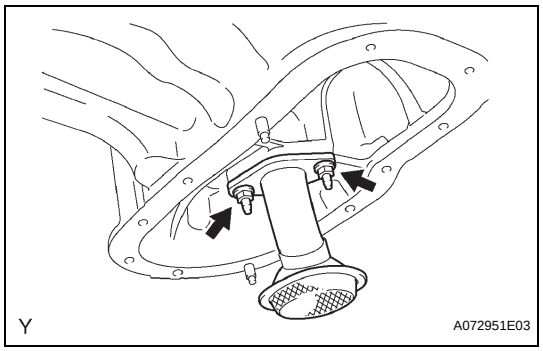

39. INSTALL OIL STRAINER SUB-ASSEMBLY

(a) Install a new gasket, then install the oil strainer with the 2 nuts.

Torque: 9.0 N*m (92 kgf*cm, 80 in.*lbf)

40. INSTALL NO. 2 OIL PAN SUB-ASSEMBLY

(a) Remove any old packing material and be careful not to drop any oil on the No. 2 contact surfaces of the oil pan and oil pan.

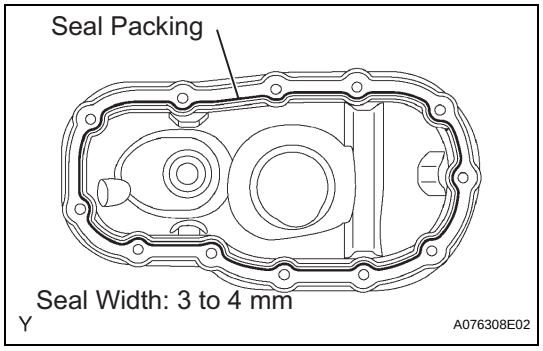

(b) Apply a continuous bead of seal packing (diameter 3 to 4 mm (0.12 to 0.16 in.)) as shown in the illustration.

Seal packing:
Toyota Genuine Seal Packing Black, Three Bond 1207B or the equivalent

NOTICE:
Install the No. 2 oil pan within 3 minutes of applying the seal packing. After installation, the No. 2 oil pan bolts and nuts must be tightened within 15 minutes. Otherwise, the seal packing must be removed and reapplied.

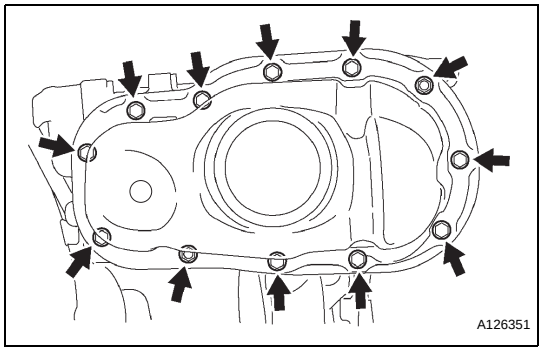

(c) Install the No. 2 oil pan with the 10 bolts and 2 nuts. Tighten the bolts and nuts uniformly in several steps.

Torque: Bolt
9.0 N*m (92 kgf*cm, 80 in.*lbf)
Nut
10 N*m (102 kgf*cm, 7.4 ft.*lbf)

41. INSTALL OIL PAN DRAIN PLUG

(a) Install the drain plug with a new gasket.

Torque: 40 N*m (408 kgf*cm, 30 ft.*lbf)

EM

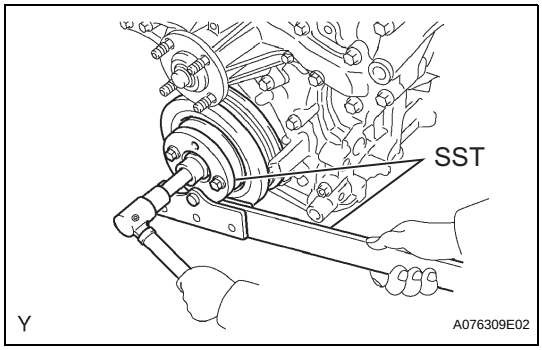

42. INSTALL CRANKSHAFT PULLEY

(a) Using SST, fix the pulley and tighten the bolt.
SST 09213-54015 (91651-60855), 09330-00021
Torque: 250 N*m (2,549 kgf*cm, 185 ft.*lbf)

43. SET NO. 1 CYLINDER TO TDC/COMPRESSION

44. INSPECT VALVE CLEARANCE

45. ADJUST VALVE CLEARANCE

46. INSTALL CYLINDER HEAD COVER SUB-ASSEMBLY

(a) Remove any old packing material and oil from the contact surfaces of the cylinder head, timing chain cover and cylinder head cover.

(b) Install the gasket onto the cylinder head cover.

EM

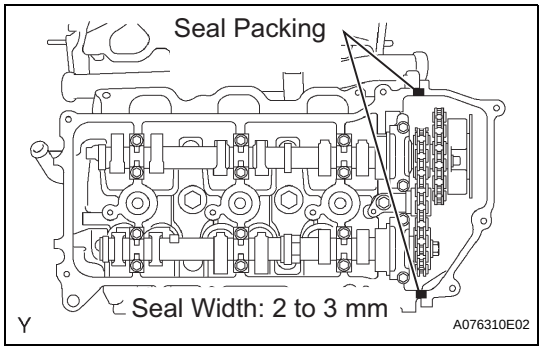

(c) Apply a continuous bead of seal packing (diameter 2 to 3 mm (0.08 to 0.12 in.)) to the cylinder head and timing chain cover as shown in the illustration.
Seal packing:
Toyota Genuine Seal Packing Black, Three Bond 1207B or the equivalent
NOTICE:
Install the cylinder head cover within 3 minutes of applying the seal packing. After installation, the cylinder head cover bolts and nuts must be tightened within 15 minutes. Otherwise the seal packing must be removed and reapplied.

(d) Install the seal washers onto the bolts.

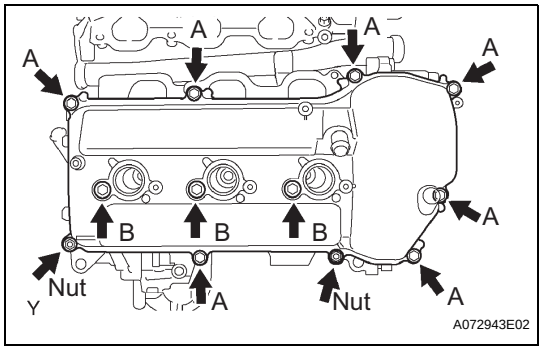

(e) Install the cylinder head cover with the 10 bolts and 2 nuts. Tighten the bolts and nuts uniformly in several steps.
Torque: Bolt A
10 N*m (102 kgf*cm, 7.4 ft.*lbf)
Bolt B
9.0 N*m (92 kgf*cm, 80 in.*lbf)
Nut
9.0 N*m (92 kgf*cm, 80 in.*lbf)
HINT:
Each bolt length is as follows:

Bolt	length
A	25 mm (0.98 in.)
B	60 mm (2.36 in.)

47. INSTALL CYLINDER HEAD COVER SUB-ASSEMBLY LH

(a) Remove any old packing material and oil from the contact surfaces of the cylinder head, timing chain cover and cylinder head cover.

(b) Apply adhesive to the threads of the ventilation valve.
Adhesive:
Part No. 08833-00070, THREE BOND 1324 or the equivalent

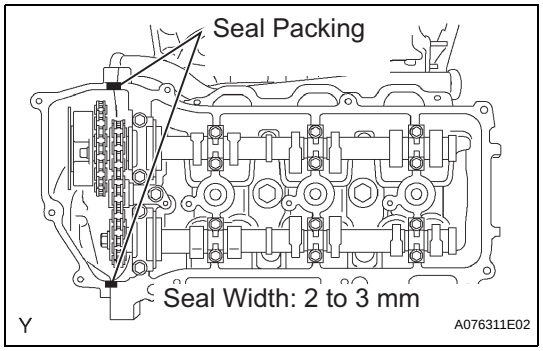

(c) Install the ventilation valve onto the cylinder head cover.
Torque: 27 N*m (275 kgf*cm, 20 ft.*lbf)

(d) Install the gasket onto the cylinder head cover.

(e) Apply a continuous bead of seal packing (diameter 2 to 3 mm (0.08 to 0.12 in.)) to the cylinder head and timing chain cover as shown in the illustration.
Seal packing:
Toyota Genuine Seal Packing Black, Three Bond 1207B or the equivalent
NOTICE:
Install the cylinder head cover of 3 minutes of applying the seal packing. After installation, the cylinder head cover bolts and nuts must be tightened within 15 minutes. Otherwise, the seal packing must be removed and reapplied.

(f) Install the seal washers onto the bolts.

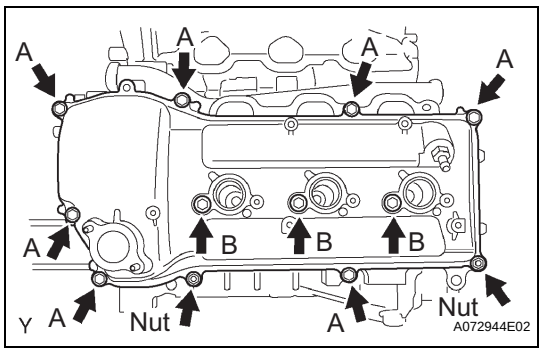

(g) Install the cylinder head cover with the 10 bolts and 2 nuts. Tighten the bolts and nuts uniformly in several steps.
Torque: Bolt A
10 N*m (102 kgf*cm, 7.4 ft.*lbf)
Bolt B
9.0 N*m (92 kgf*cm, 80 in.*lbf)
Nut
9.0 N*m (92 kgf*cm, 80 in.*lbf)
HINT:
Each bolt length is as follows:

Bolt	length
A	25 mm (0.98 in.)
B	60 mm (2.36 in.)

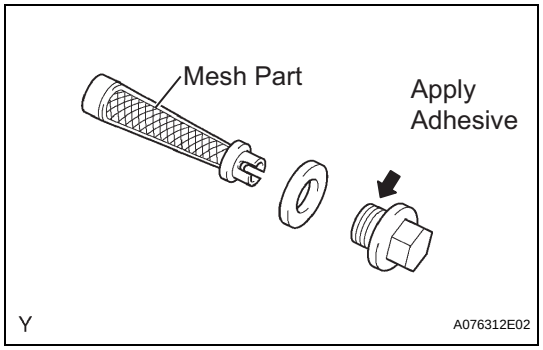

48. INSTALL OIL CONTROL VALVE FILTER

(a) Check that no foreign objects on the mesh part of the 2 filters.

(b) Install a new gasket onto each new plug.

(c) Insert the filters into the plugs.

(d) Apply adhesive to 2 or 3 threads of the plugs.
Adhesive:
Part No. 08833-00080, THREE BOND 1344 LOCTITE 242 or the equivalent

(e) Install the plugs onto each cylinder head.
Torque: 62 N*m (632 kgf*cm, 46 ft.*lbf)

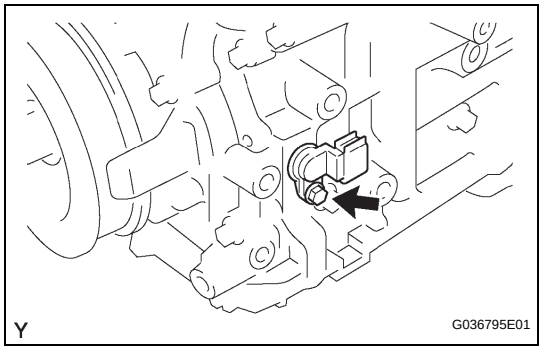

49. INSTALL CRANKSHAFT POSITION SENSOR

(a) Install the crankshaft position sensor with the bolt.
Torque: 10 N*m (102 kgf*cm, 7.4 ft.*lbf)

EM

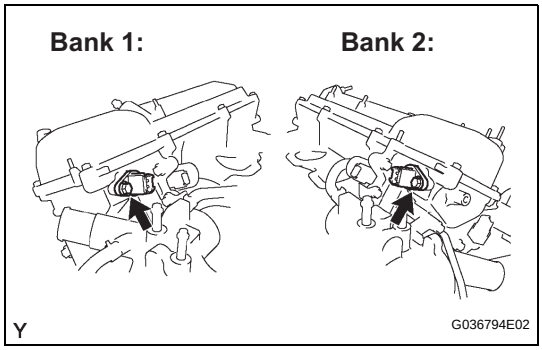

50. INSTALL VVT SENSOR

(a) Apply a light coat of engine oil to the O-ring of each VVT sensor.

(b) Install the 2 VVT sensors with the 2 bolts.
Torque: 8.0 N*m (82 kgf*cm, 71 in.*lbf)

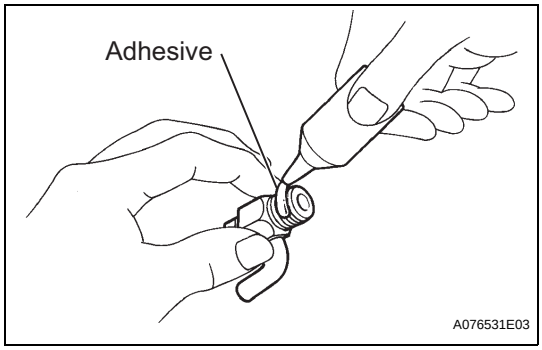

51. INSTALL CYLINDER BLOCK WATER DRAIN COCK SUB-ASSEMBLY

(a) Apply adhesive to 2 or 3 threads of the drain cock ends.
Adhesive:
Part No. 08833-00070, THREE BOND 1324 or the equivalent

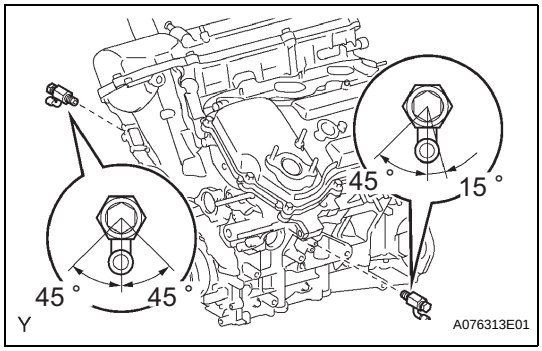

(b) Tighten the drain cocks to the specified torque, and rotate them clockwise as shown in the illustration.
Torque: 25 N*m (255 kgf*cm, 18 ft.*lbf)
NOTICE:
- **Do not rotate the drain cocks more than 1 complete revolution (360°) after tightening the drain cocks to the specified torque.**
- **Do not loosen the drain cocks after setting them correctly.**

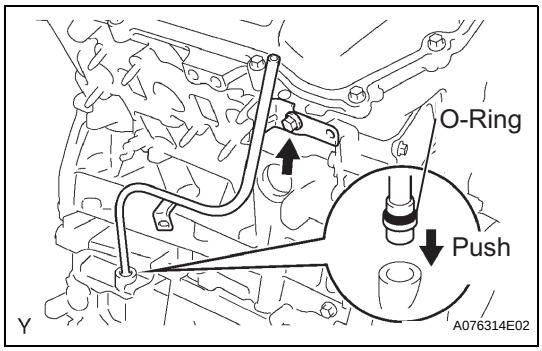

52. INSTALL OIL LEVEL GAUGE GUIDE

(a) Install a new O-ring onto the oil level gauge guide.

(b) Apply a light coat of engine oil to the O-ring.

(c) Push the oil level gauge guide end into the guide hole of the oil pan.

(d) Install the oil level gauge guide with the bolt.
Torque: 9.0 N*m (92 kgf*cm, 80 in.*lbf)

53. INSTALL SPARK PLUG

(a) Using a spark plug wrench, install the 6 spark plugs.
Torque: 20 N*m (200 kgf*cm, 14 ft.*lbf)

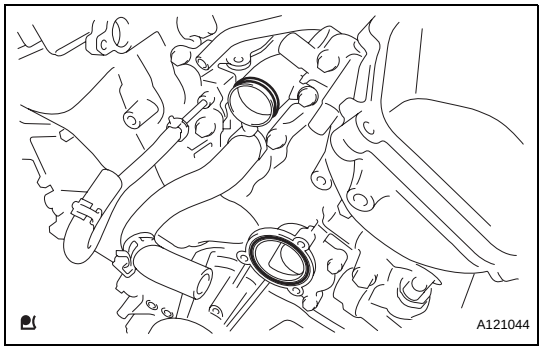

54. INSTALL WATER INLET

(a) Install a new gasket onto the timing chain cover.

(b) Install a new O-ring onto the water by-pass outlet pipe.

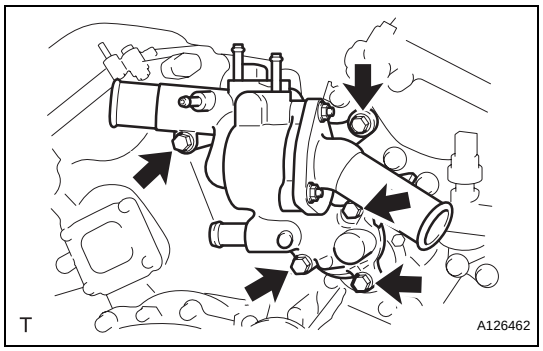

(c) Install the water inlet with the 5 bolts.
Torque: 9.0 N*m (92 kgf*cm, 80 in.*lbf)

55. INSTALL WATER BY-PASS HOSE

(a) Install the water by-pass hose with the 2 clamps.

56. INSTALL NO. 2 WATER BY-PASS HOSE

(a) Install the No. 2 water by-pass hose with the 2 clamps.

57. INSTALL NO. 3 WATER BY-PASS HOSE

(a) Install the No. 3 water by-pass hose with the 2 clamps.

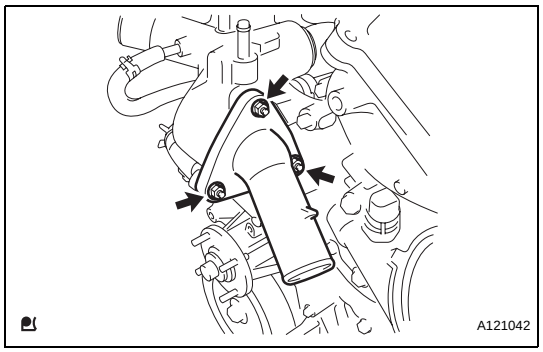

58. INSTALL WITH THERMOSTAT WATER INLET SUB-ASSEMBLY

(a) Install a new O-ring and the water inlet with thermostat with the 3 nuts.
Torque: 9.0 N*m (92 kgf*cm, 80 in.*lbf)

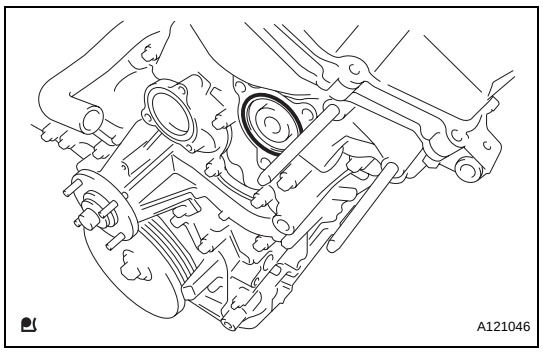

59. INSTALL OIL FILTER BRACKET SUB-ASSEMBLY

(a) Install the 2 stud bolts.
Torque: 10 N*m (102 kgf*cm, 7.4 ft.*lbf)

(b) Install a new gasket.

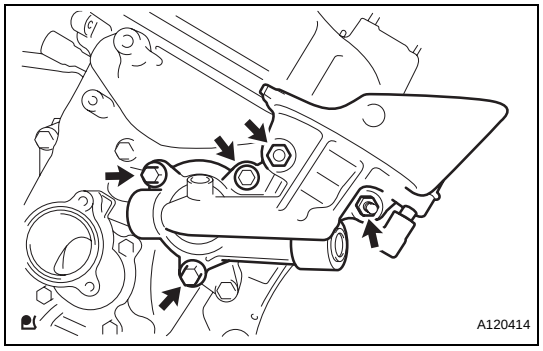

(c) Install the oil filter bracket with the 3 bolts and 2 nuts.
Torque: 19 N*m (194 kgf*cm, 14 ft.*lbf)

EM

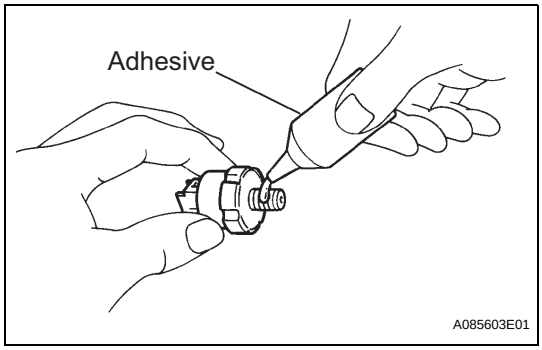

60. INSTALL ENGINE OIL PRESSURE SWITCH ASSEMBLY

(a) Apply adhesive to 2 or 3 threads of the oil pressure switch.
Adhesive:
Part No. 08833-00080, THREE BOND 1344, LOCTITE 242 or the equivalent.

(b) Using a 24 mm deep socket wrench, install the oil pressure switch.
Torque: 15 N*m (153 kgf*cm, 11 ft.*lbf)

61. INSTALL OIL FILTER UNION

(a) Using a 12 mm hexagon wrench, install the oil filter union.
Torque: 30 N*m (306 kgf*cm, 22 ft.*lbf)

EM

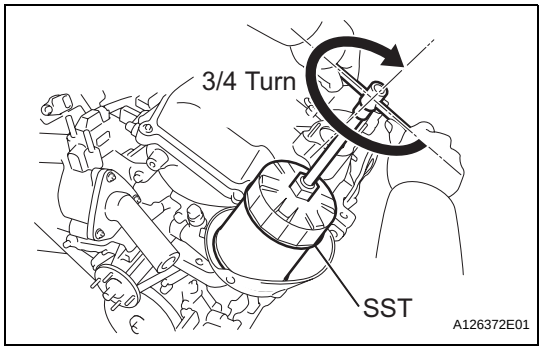

62. INSTALL OIL FILTER SUB-ASSEMBLY

(a) Clean the oil filter contact surface on the oil filter bracket.

(b) Apply clean engine oil to the rubber gasket of a new oil filter.

(c) Tighten the oil filter by hand until the rubber gasket comes into contact with the seat of the filter bracket.

(d) Using SST, tighten it an additional 3/4 turn to set the oil filter.
SST 09228-07501
Torque: 18 N*m (184 kgf*cm, 13 ft.*lbf)

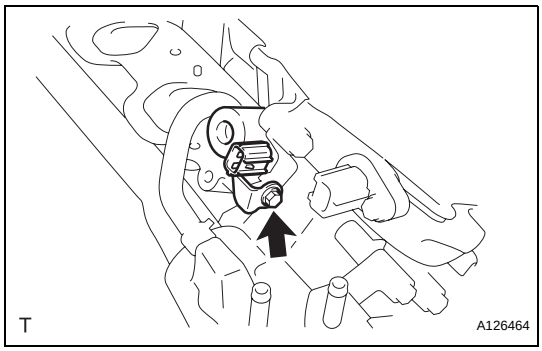

63. INSTALL CAMSHAFT TIMING OIL CONTROL VALVE ASSEMBLY (for Bank 2)

(a) Install the camshaft timing oil control valve bank 2 with the bolt.
Torque: 9.0 N*m (92 kgf*cm, 80 in.*lbf)

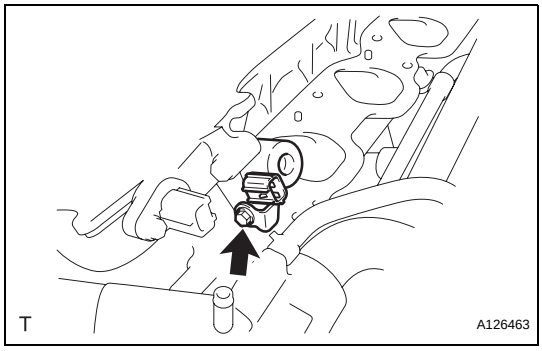

64. INSTALL CAMSHAFT TIMING OIL CONTROL VALVE ASSEMBLY (for Bank 1)

(a) Install the camshaft timing oil control valve bank 1 with the bolt.
Torque: 9.0 N*m (92 kgf*cm, 80 in.*lbf)

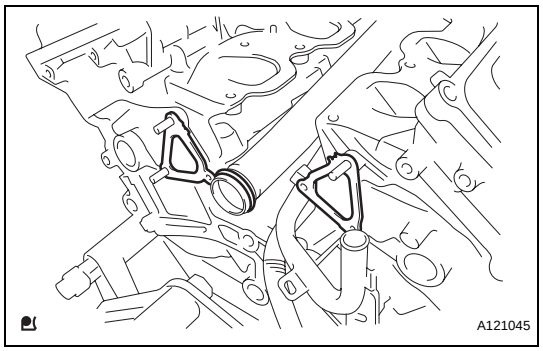

65. INSTALL WATER BY-PASS JOINT RR

(a) Install a new O-ring onto the water outlet pipe.

(b) Install the 2 gaskets onto the bank 1 and bank 2 cylinder heads.

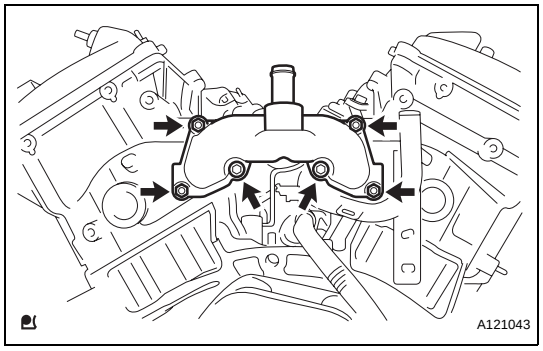

(c) Install the water by-pass rear joint with the 2 bolts and 4 nuts.
Torque: 9.0 N*m (92 kgf*cm, 80 in.*lbf)

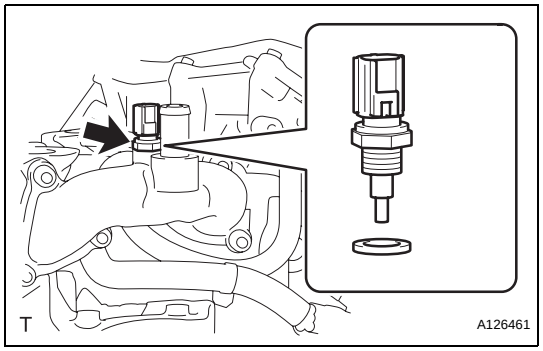

66. INSTALL ENGINE COOLANT TEMPERATURE SENSOR

(a) Install the engine coolant temperature sensor with a new gasket.
Torque: 20 N*m (200 kgf*cm, 14 ft.*lbf)

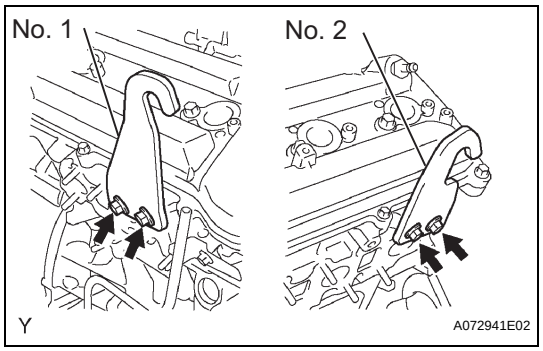

67. INSTALL ENGINE HANGERS

(a) Install engine hanger No. 1 with the 2 bolts.
Torque: 33 N*m (336 kgf*cm, 24 ft.*lbf)

(b) Install engine hanger No. 2 with the 2 bolts.
Torque: 33 N*m (336 kgf*cm, 24 ft.*lbf)

EXHAUST PIPE

COMPONENTS

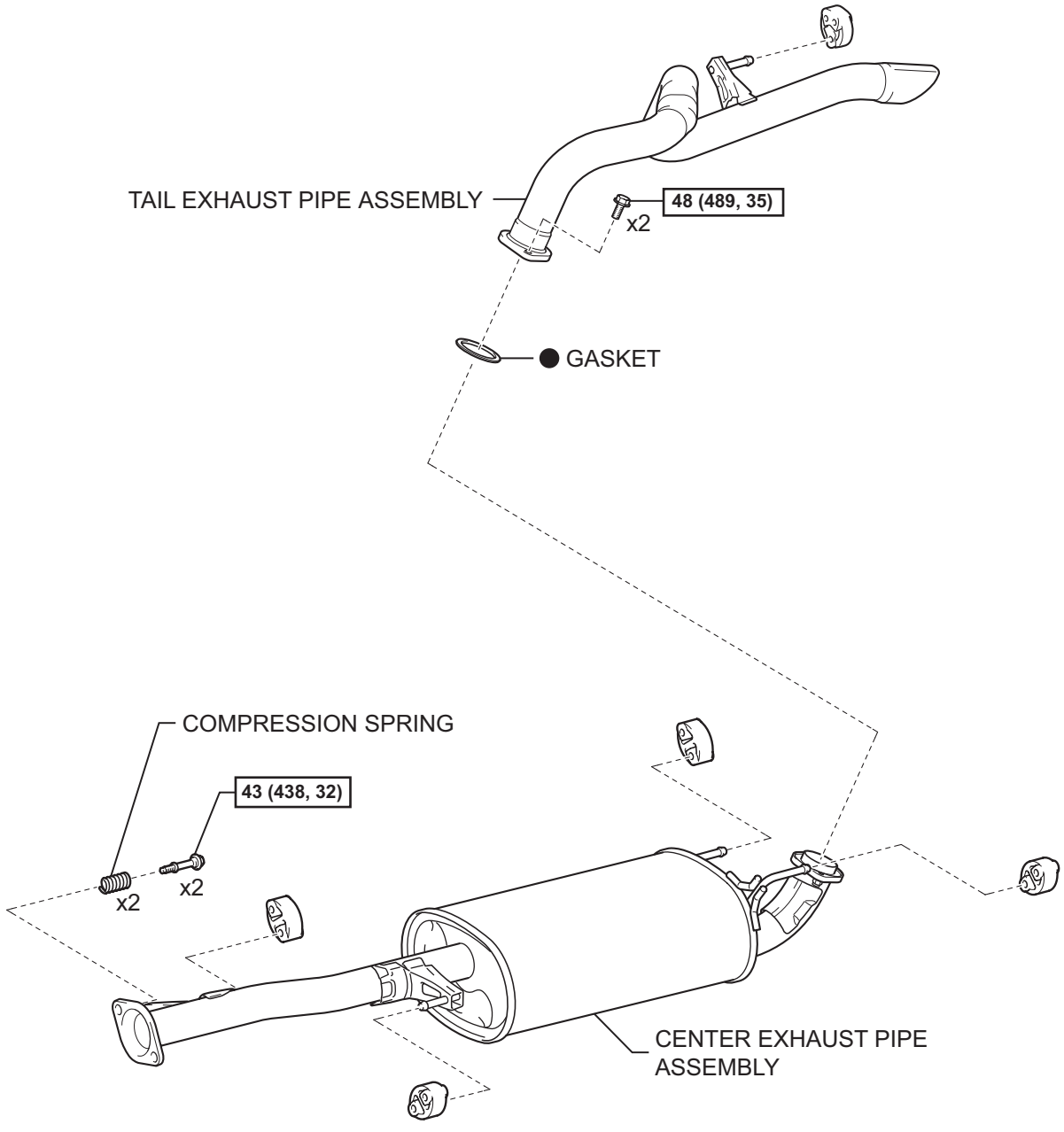

N*m (kgf*cm, ft*lbf) : Specified torque

● Non-reusable part

P

A128846E01

EX

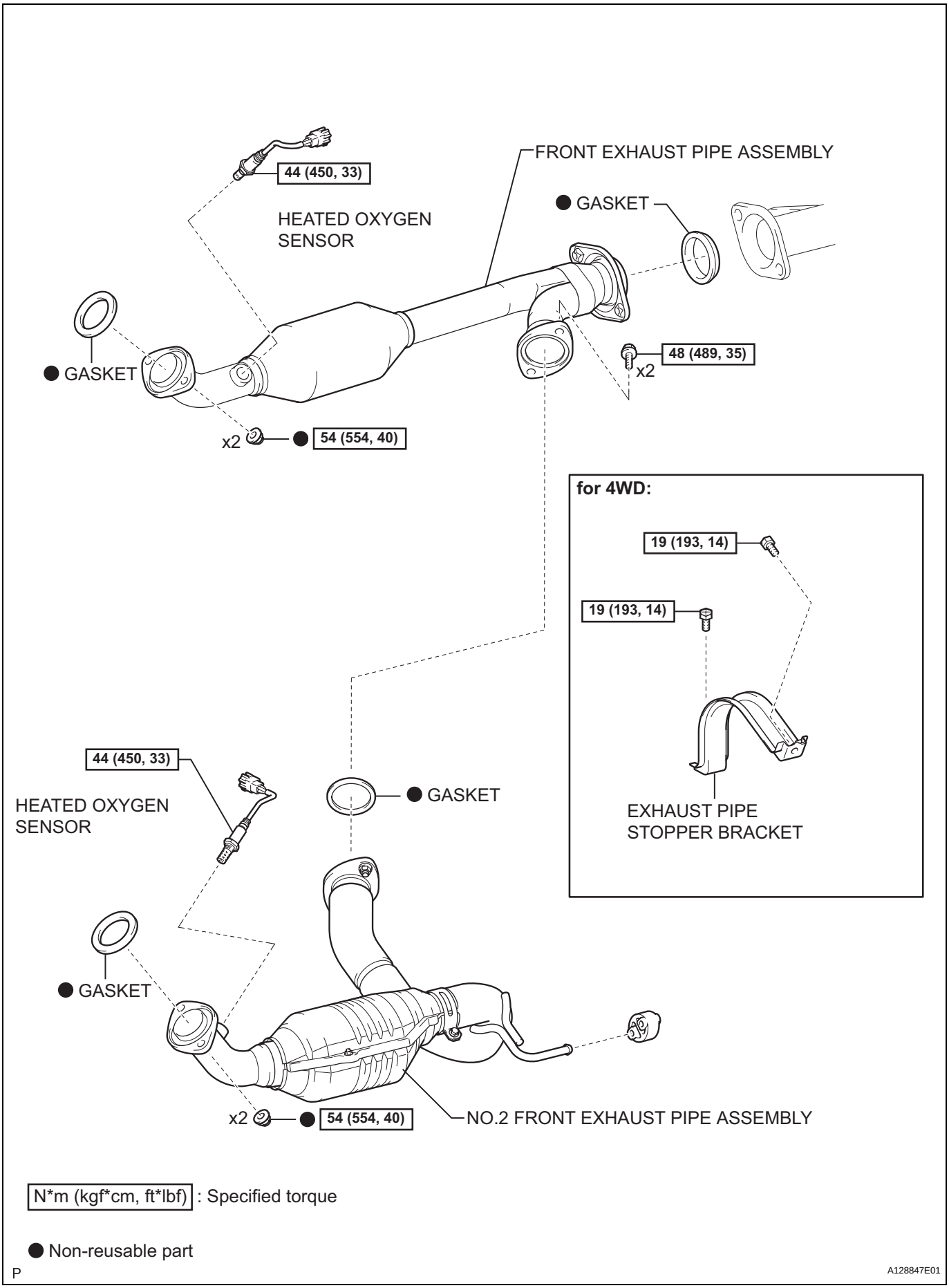
44 (450, 33)
HEATED OXYGEN SENSOR
FRONT EXHAUST PIPE ASSEMBLY
GASKET
GASKET
48 (489, 35)
x2
x2
54 (554, 40)
for 4WD:
19 (193, 14)
19 (193, 14)
EXHAUST PIPE STOPPER BRACKET
44 (450, 33)
HEATED OXYGEN SENSOR
GASKET
GASKET
x2
54 (554, 40)
NO.2 FRONT EXHAUST PIPE ASSEMBLY
N*m (kgf*cm, ft*lbf) : Specified torque
Non-reusable part
A128847E01

EX

P

REMOVAL

1. **DISCONNECT CABLE FROM NEGATIVE BATTERY TERMINAL**

2. **REMOVE HEATED OXYGEN SENSOR (See page EC-24)**

3. **REMOVE TAIL EXHAUST PIPE ASSEMBLY**
   (a) Remove the 2 bolts and separate the exhaust pipe support, then remove the tail exhaust pipe.

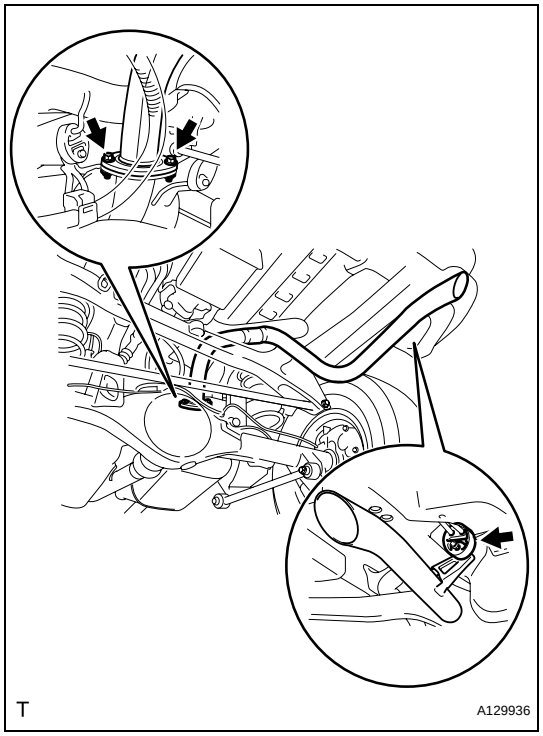

4. **REMOVE CENTER EXHAUST PIPE ASSEMBLY**
   (a) Remove the 2 bolts and 2 compression springs, then separate the center exhaust pipe.
   (b) Separate the 4 exhaust pipe supports from the center exhaust pipe, then remove the center exhaust pipe.

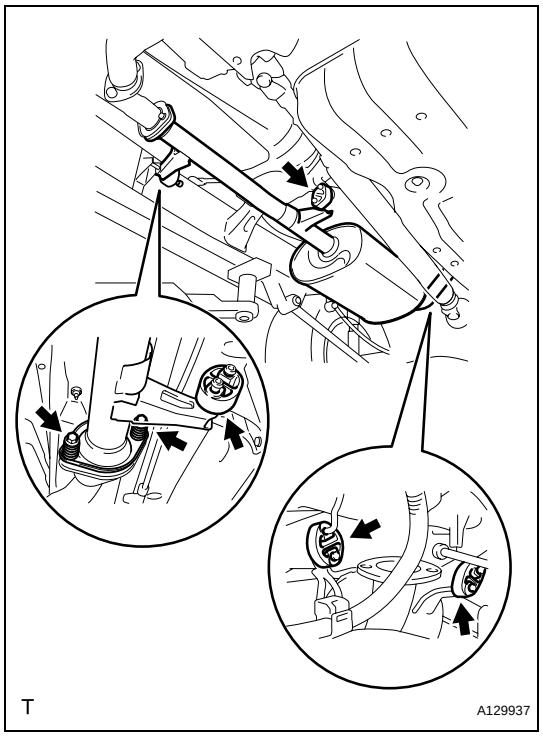

EX

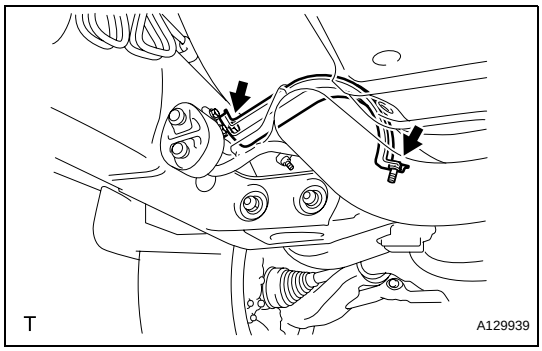

5. REMOVE NO. 2 FRONT EXHAUST PIPE ASSEMBLY

(a) Remove the 2 bolts, then remove the exhaust pipe stopper bracket. (for 4WD)

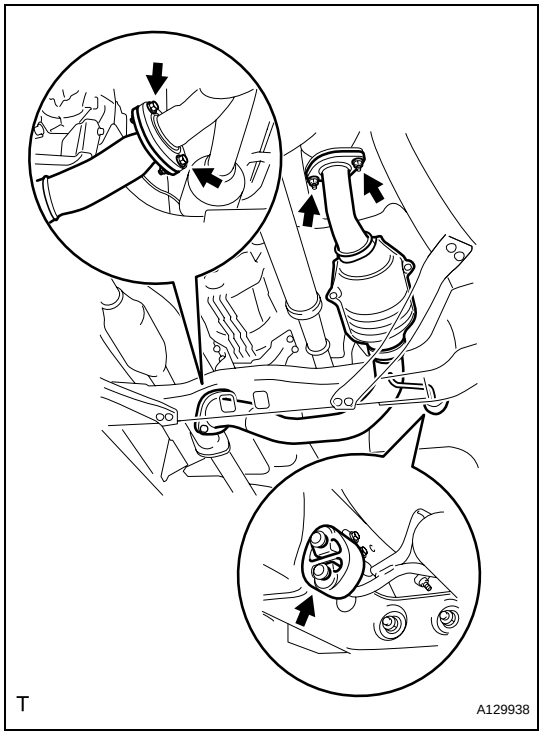

(b) Remove the 2 bolts and 2 nuts and separate the exhaust pipe support, then remove the No. 2 front exhaust pipe.

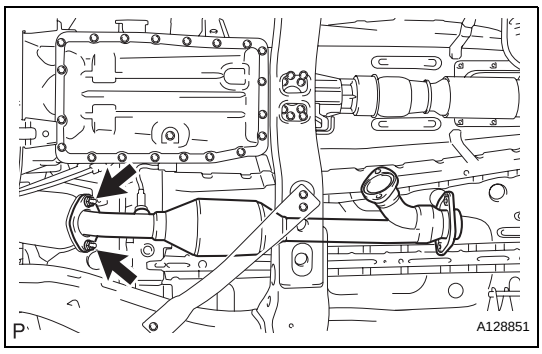

6. REMOVE FRONT EXHAUST PIPE ASSEMBLY

(a) Remove the 2 nuts, then remove the front exhaust pipe.

(b) Remove the front exhaust pipe gasket.

EX

INSTALLATION

1. INSTALL FRONT EXHAUST PIPE ASSEMBLY

(a) Install a new gasket onto the exhaust manifold RH.

(b) Install the exhaust front pipe with the new 2 nuts.
Torque: 54 N*m (554 kgf*cm, 40 ft.*lbf)

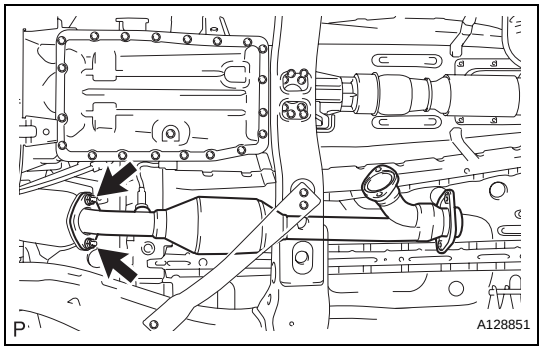

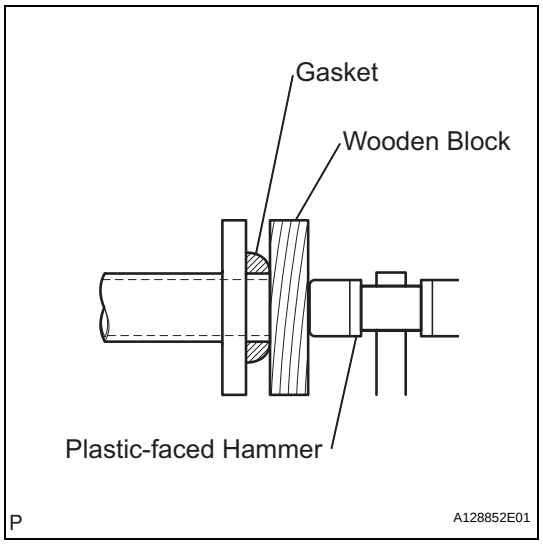

(c) Install a new gasket onto the front exhaust pipe.
(1) Using a wooden block and plastic-faced hammer, tap in a new gasket until it is flush with the front exhaust pipe end.
NOTICE:
- **Make sure that the gasket is in the correct direction when installing.**
- **Do not reuse the removed gasket.**

2. INSTALL NO. 2 FRONT EXHAUST PIPE ASSEMBLY

(a) Install a new gasket onto the exhaust manifold LH.

(b) Install a new gasket onto the No. 2 front exhaust pipe.

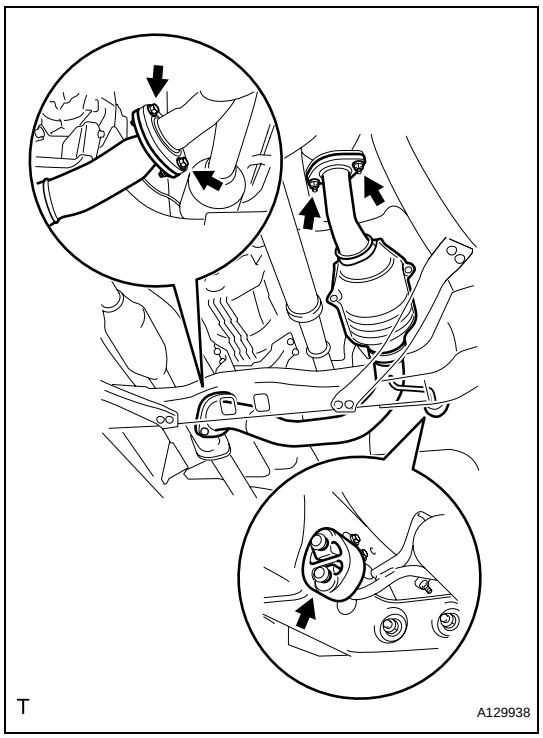

(c) Install the No. 2 front exhaust pipe with the 2 new nuts and 2 bolts and exhaust pipe support.
Torque: Nut
54 N*m (550 kgf*cm, 40 ft.*lbf)
Bolt
48 N*m (489 kgf*cm, 35 ft.*lbf)

EX

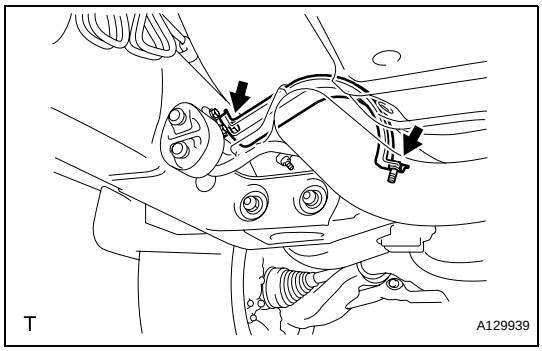

(d) Install the exhaust pipe stopper bracket with the 2 bolts (for 4WD).
Torque: 19 N*m (193 kgf*cm, 14 ft.*lbf)

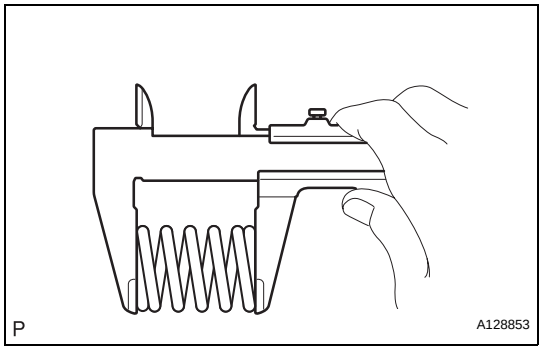

3. INSTALL CENTER EXHAUST PIPE ASSEMBLY

(a) Check the free length.
(1) Using vernier calipers, measure the free length of the compression spring.
Minimum:
40.5mm (1.594 in.)
If the free length is less that the minimum, replace the compression spring.

EX

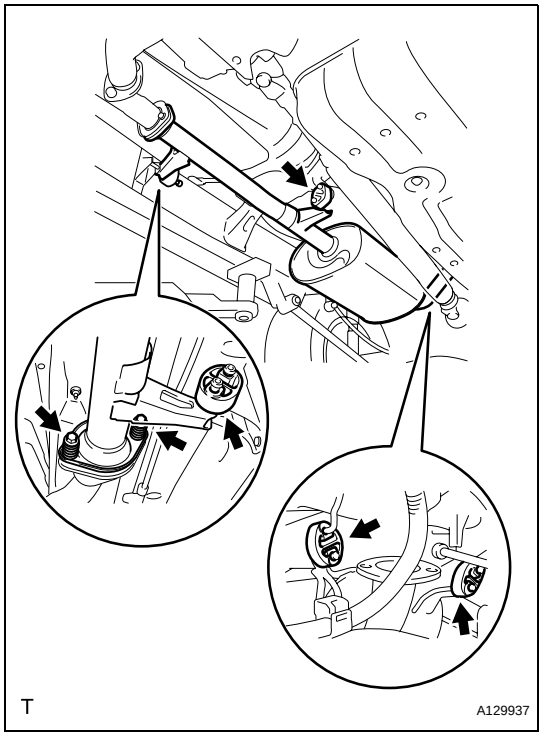

(b) Install the center exhaust pipe onto the 4 exhaust pipe supports.
(c) Install the center exhaust pipe with the 2 bolts and 2 springs.
Torque: 43 N*m (438 kgf*cm, 32 ft.*lbf)

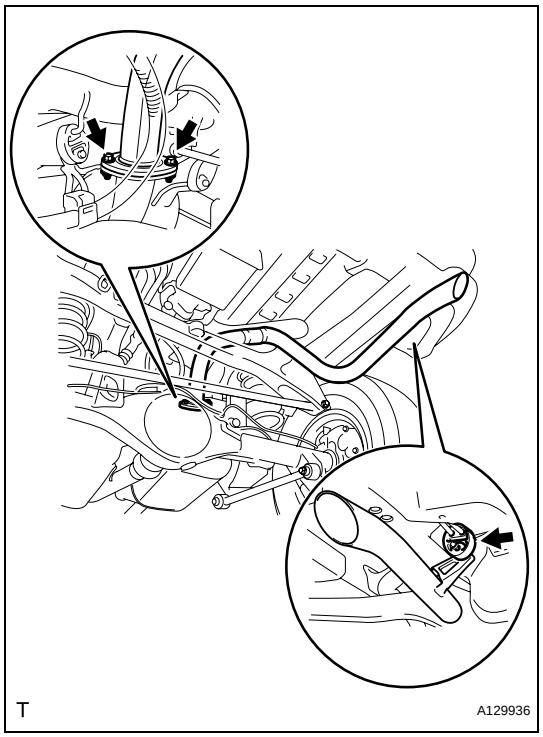

4. **INSTALL TAIL EXHAUST PIPE ASSEMBLY**
   (a) Install a new gasket onto the center exhaust pipe.
   (b) Install the tail exhaust pipe with the 2 bolts and exhaust pipe support.
   Torque: 48 N*m (489 kgf*cm, 35 ft.*lbf)

5. **INSTALL HEATED OXYGEN SENSOR (See page EC-24)**

6. **CONNECT CABLE TO NEGATIVE BATTERY TERMINAL**
   Torque: 3.9 N*m (40 kgf*cm, 35 in.*lbf)

7. **CHECK EXHAUST GAS LEAKAGE**

FRONT BUMPER

COMPONENTS

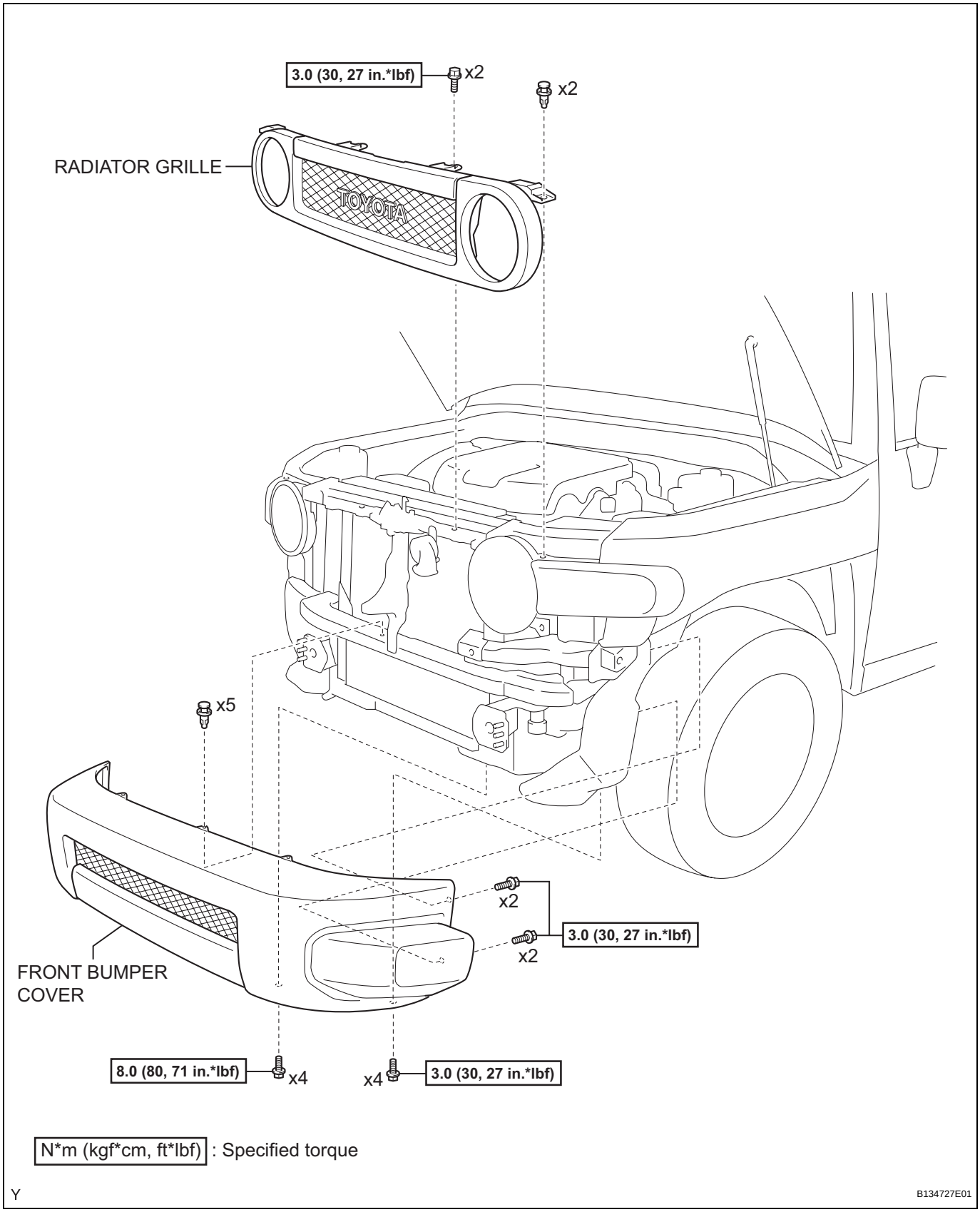

N*m (kgf*cm, ft*lbf) : Specified torque

Y

B134727E01

ET

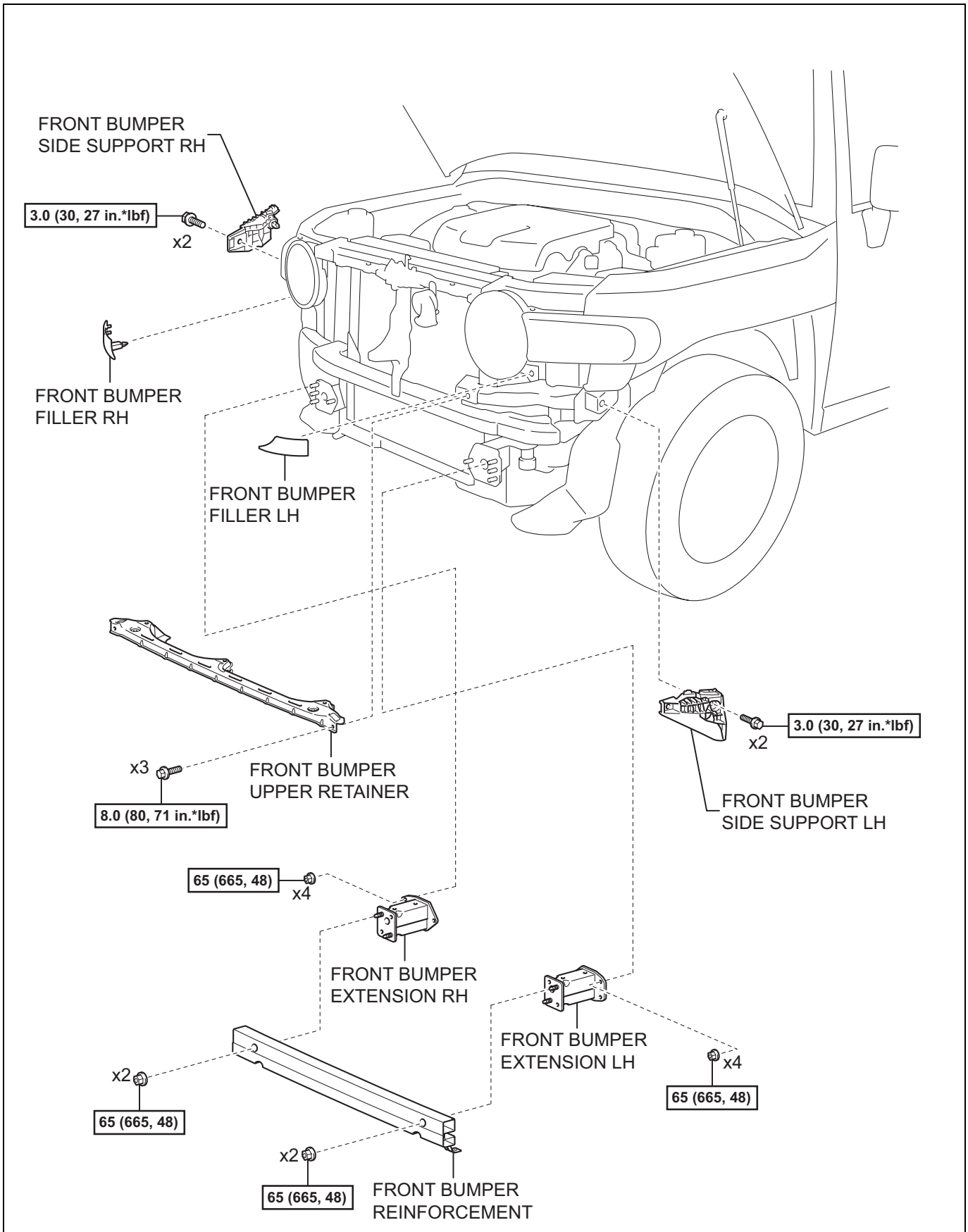

N*m (kgf*cm, ft*lbf) : Specified torque

Y

B134728E01

ET

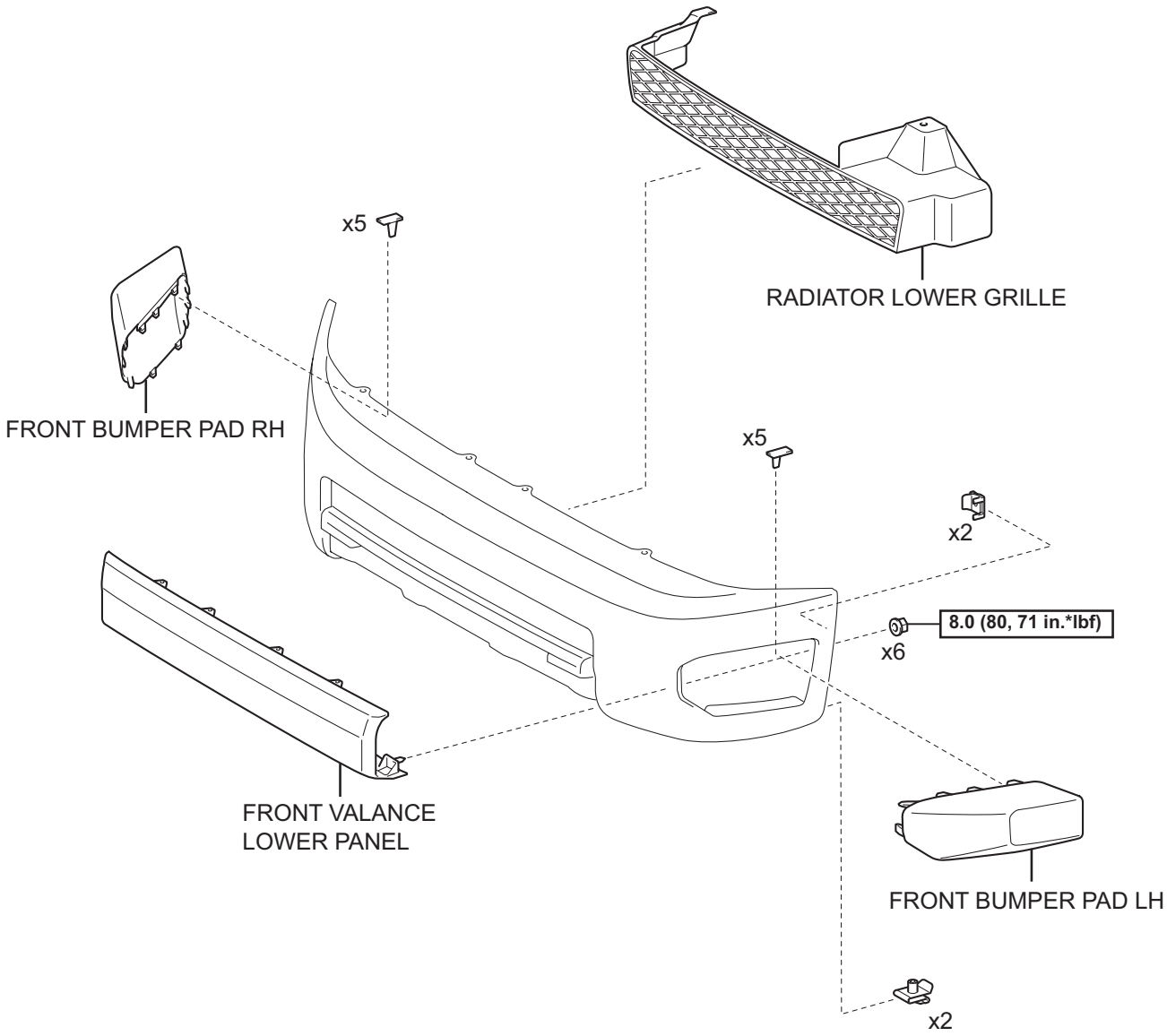

N*m (kgf*cm, ft*lbf) : Specified torque

Y

B135067E01

ET

REMOVAL

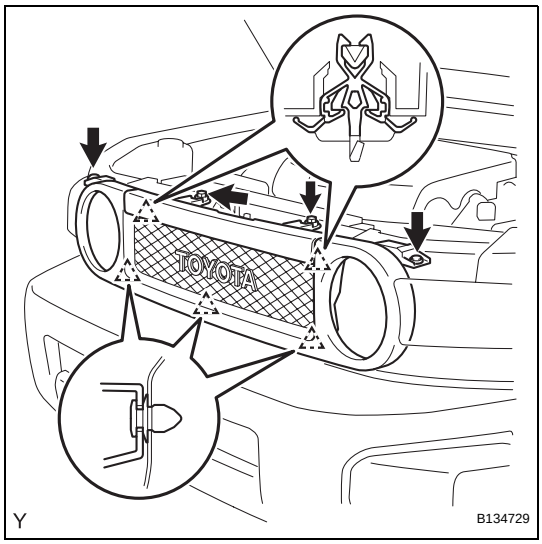

1. REMOVE RADIATOR GRILLE

(a) Using a clip remover, remove the 2 clips.
(b) Remove the 2 screws.
(c) Disengage the 5 clips and remove the radiator grille.

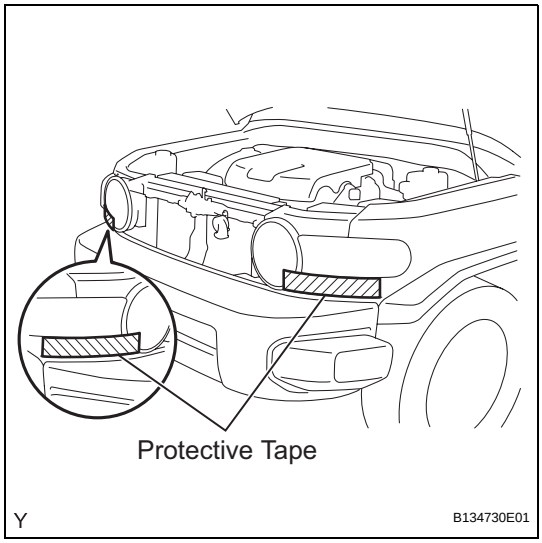

2. REMOVE FRONT BUMPER COVER

(a) Apply protective tape as shown in the illustration.

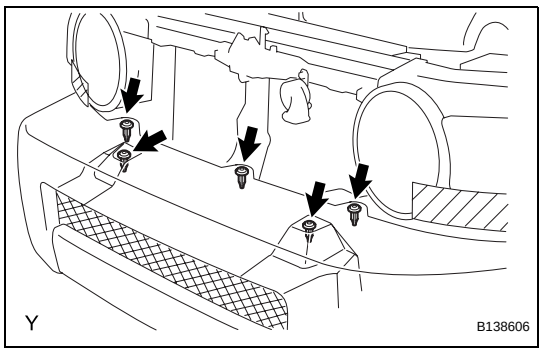

(b) Using a clip remover, remove the 5 clips.

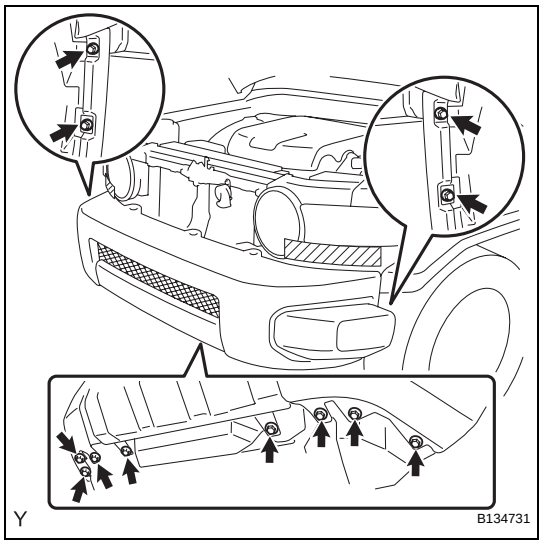

(c) Remove the 8 screws and the 4 bolts.

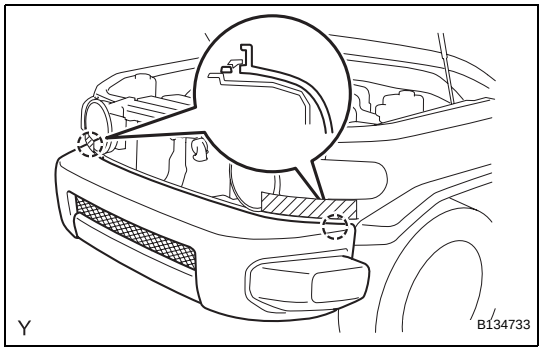

(d) Disengage the 2 claws and remove the front bumper cover.

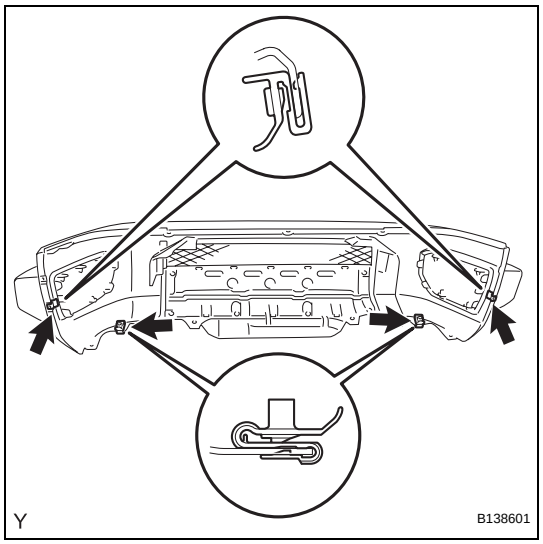

(e) Remove the 4 clips.

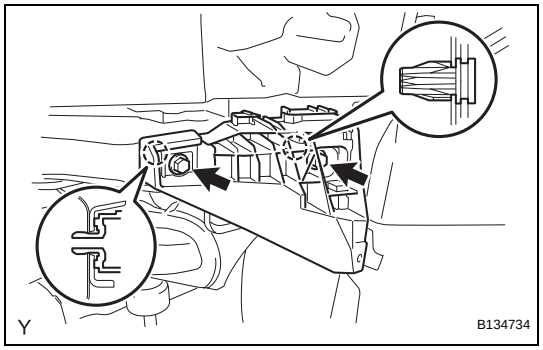

3. REMOVE FRONT BUMPER SIDE SUPPORT LH

(a) Remove the 2 screws.

(b) Disengage the 2 claws and remove the front bumper side support.

4. REMOVE FRONT BUMPER SIDE SUPPORT RH

HINT:

Use the same procedure as for the LH side.

ET

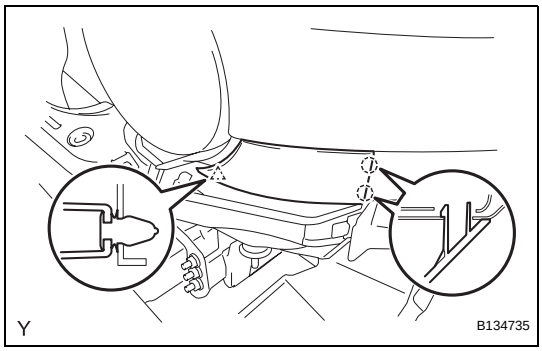

5. REMOVE FRONT BUMPER FILLER LH

(a) Disengage the clip and the 2 claws and remove the front bumper filler.

6. REMOVE FRONT BUMPER FILLER RH

HINT:

Use the same procedure as for the LH side.

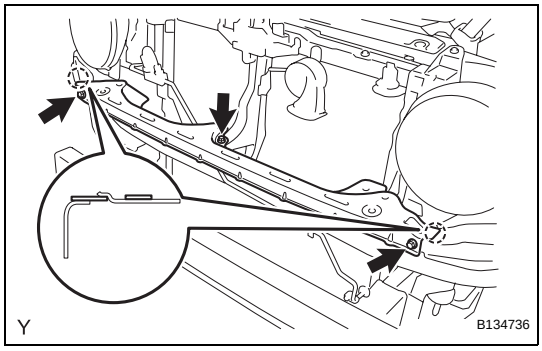

7. REMOVE FRONT BUMPER UPPER RETAINER

(a) Remove the 3 bolts.

(b) Disengage the 2 hooks and remove the front bumper upper retainer.

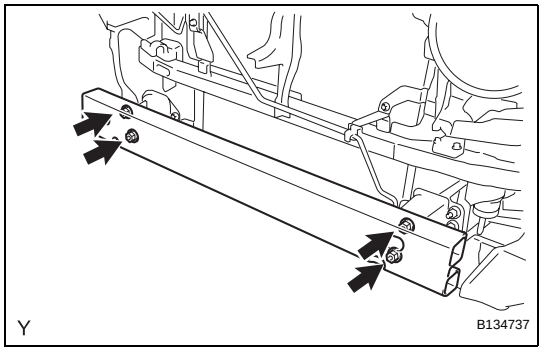

8. REMOVE FRONT BUMPER REINFORCEMENT

(a) Remove the 4 nuts and the front bumper reinforcement.

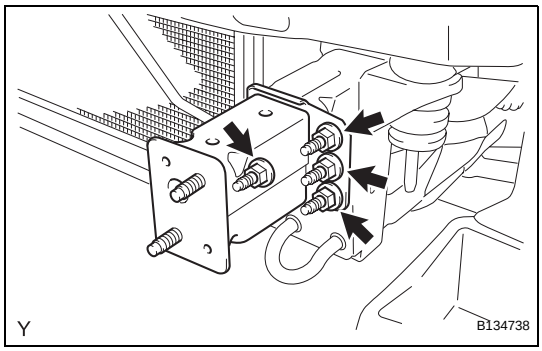

9. REMOVE FRONT BUMPER EXTENSION LH

(a) Remove the 4 nuts and the front bumper extension.

10. REMOVE FRONT BUMPER EXTENSION RH

HINT:

Use the same procedure as for the LH side.

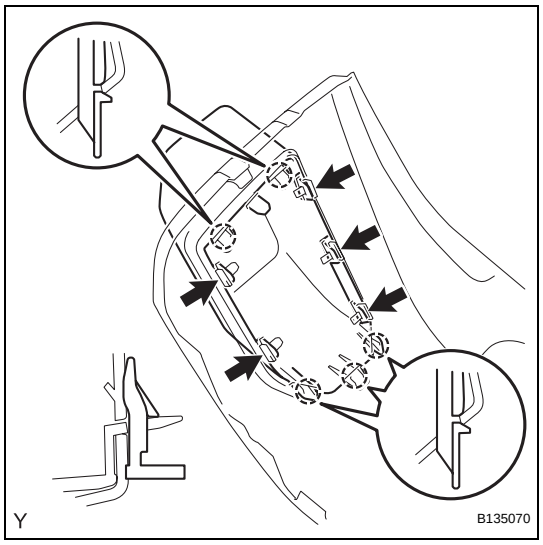

DISASSEMBLY

1. REMOVE FRONT BUMPER PAD LH

(a) Remove the 5 retainers and the front bumper pad.

(b) Disengage the 5 claws and remove the front bumper pad.

2. REMOVE FRONT BUMPER PAD RH

HINT:

Use the same procedure as for the LH side.

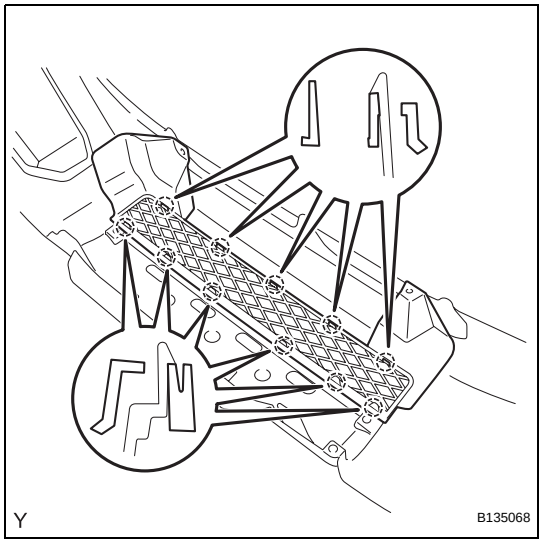

3. REMOVE RADIATOR LOWER GRILLE

(a) Disengage the 11 claws and remove the radiator lower grille.

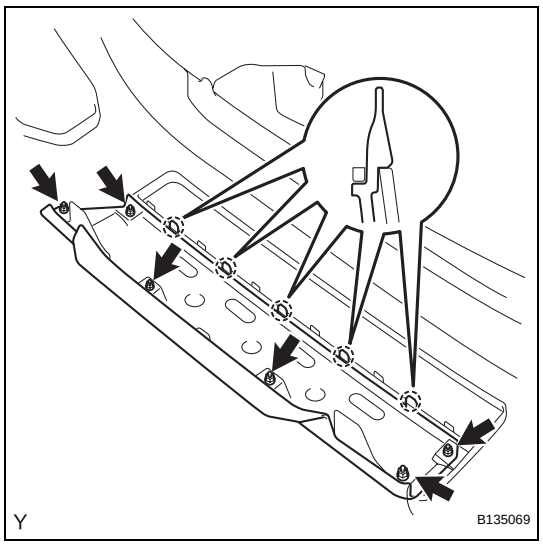

4. REMOVE FRONT VALANCE LOWER PANEL

(a) Remove the 6 nuts.

(b) Disengage the 5 claws and remove the front valance lower panel.

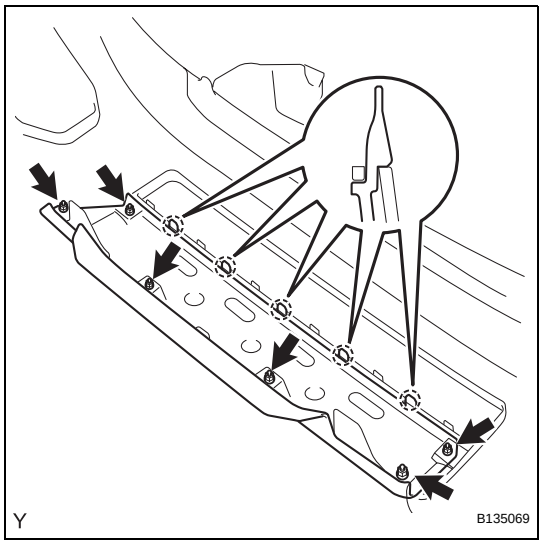

REASSEMBLY

1. INSTALL FRONT VALANCE LOWER PANEL

(a) Engage the 5 claws and install the front bumper lower panel.

(b) Tighten the 6 nuts.
Torque: 8.0 N*m (80 kgf*cm, 71 in.*lbf)

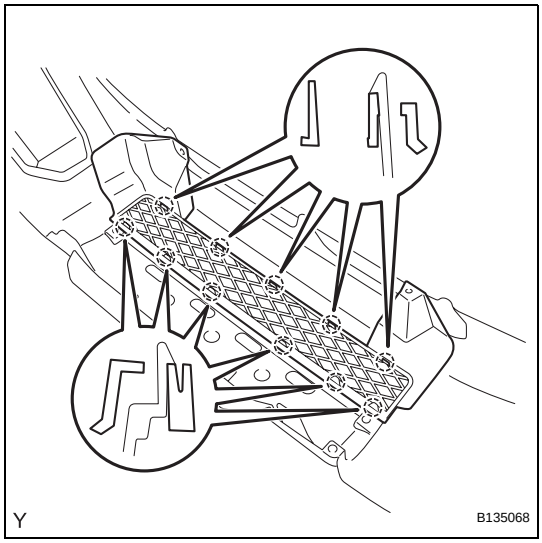

2. INSTALL RADIATOR LOWER GRILLE

(a) Engage the 11 claws and install the radiator lower grille.

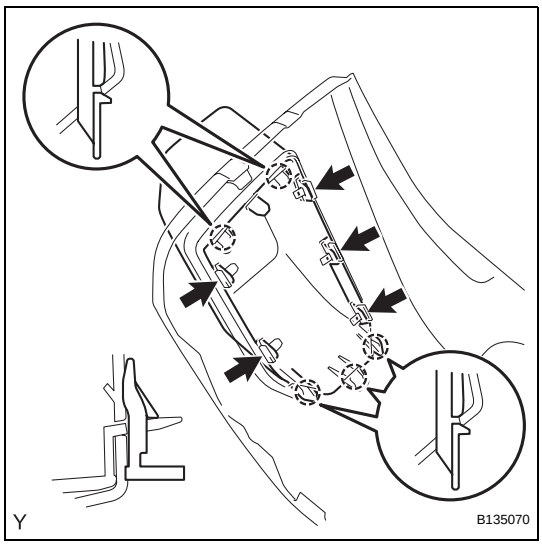

3. INSTALL FRONT BUMPER PAD LH

(a) Engage the 5 claws and install the front bumper pad.

(b) Install the 5 retainers.

4. INSTALL FRONT BUMPER PAD RH

HINT:
Use the same procedure as for the LH side.

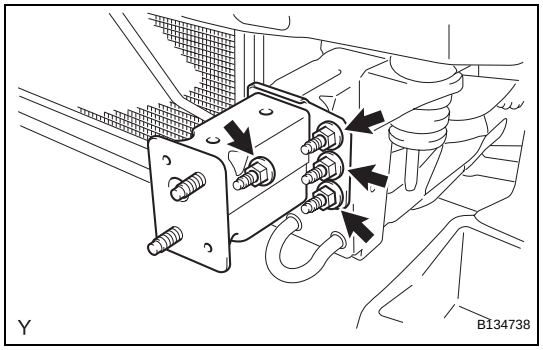

INSTALLATION

1. INSTALL FRONT BUMPER EXTENSION LH

(a) Install the front bumper extension with the 4 nuts.
Torque: 65 N*m (665 kgf*cm, 48 ft.*lbf)

2. INSTALL FRONT BUMPER EXTENSION RH

HINT:
Use the same procedure as for the LH side.

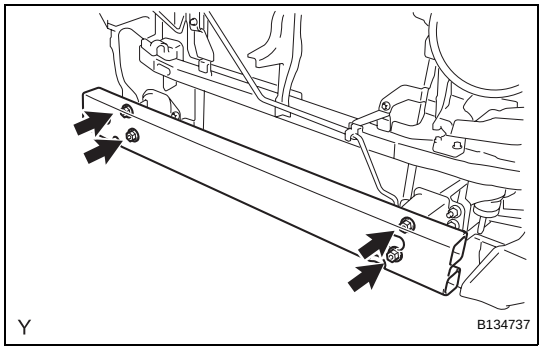

3. INSTALL FRONT BUMPER REINFORCEMENT

(a) Install the front bumper reinforcement with the 4 nuts.
Torque: 65 N*m (665 kgf*cm, 48 ft.*lbf)

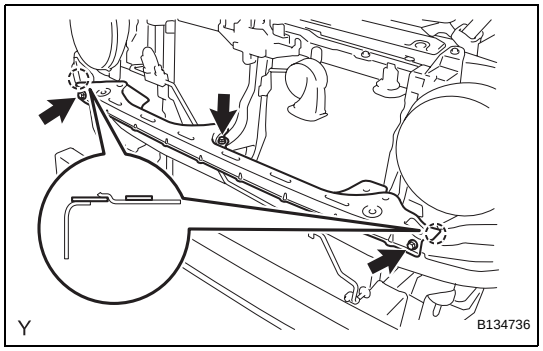

4. INSTALL FRONT BUMPER UPPER RETAINER

(a) Engage the 2 hooks and install the front bumper upper retainer.
(b) Tighten the 3 bolts.
Torque: 8.0 N*m (80 kgf*cm, 71 in.*lbf)

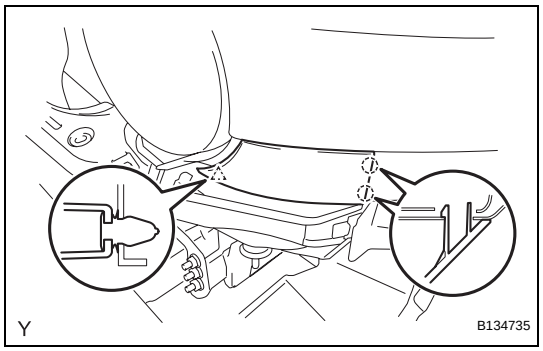

5. INSTALL FRONT BUMPER FILLER LH

(a) Engage the clip and the 2 claws and install the front bumper filler.

6. INSTALL FRONT BUMPER FILLER RH

HINT:
Use the same procedure as for the LH side.

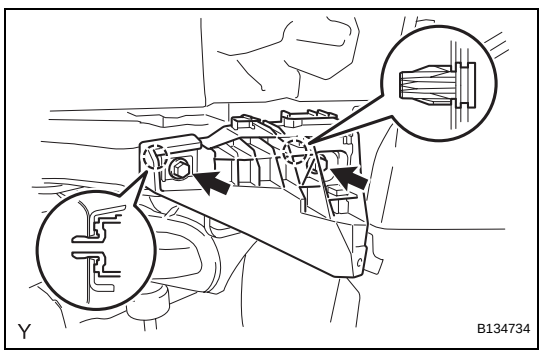

7. INSTALL FRONT BUMPER SIDE SUPPORT LH

(a) Engage the 2 claws and install the front bumper side support.
(b) Tighten the 2 screws.
Torque: 3.0 N*m (30 kgf*cm, 27 in.*lbf)

8. INSTALL FRONT BUMPER SIDE SUPPORT RH

HINT:
Use the same procedure as for the LH side.

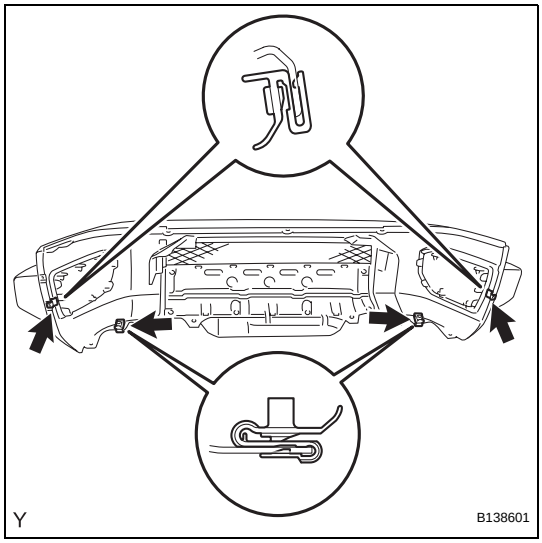

9. INSTALL FRONT BUMPER COVER

(a) Install the 4 clips.

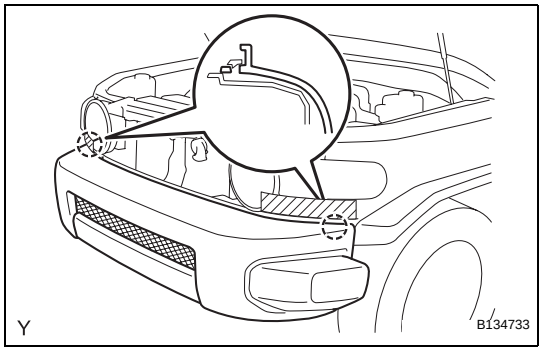

(b) Engage the 2 claws and install the front bumper cover.

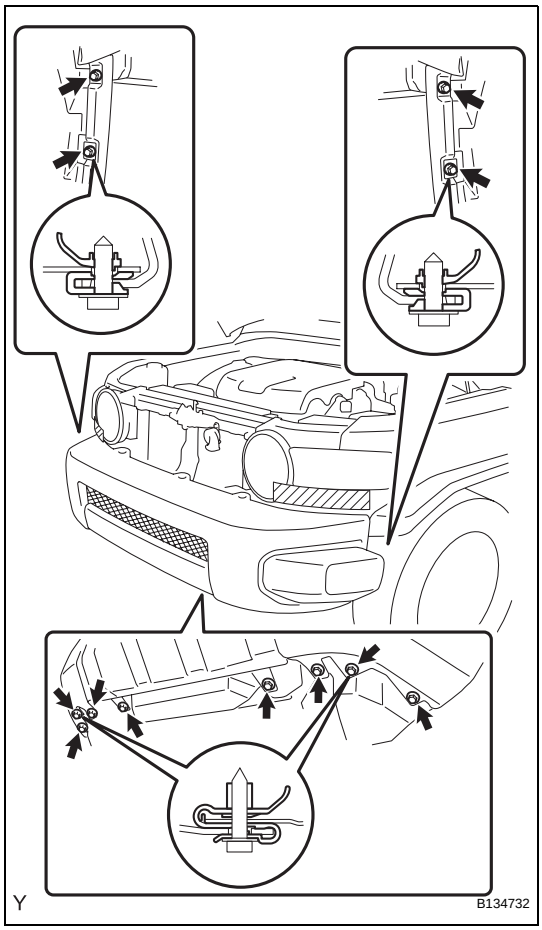

(c) Tighten the 8 screws and the 4 bolts.
Torque: 3.0 N*m (30 kgf*cm, 27 in.*lbf) for screw
8.0 N*m (80 kgf*cm, 71 in.*lbf) for bolt

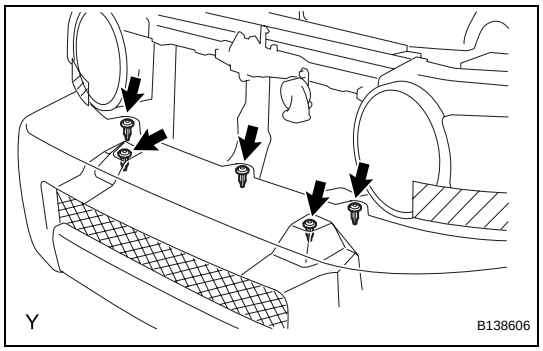

(d) Install the 5 clips.

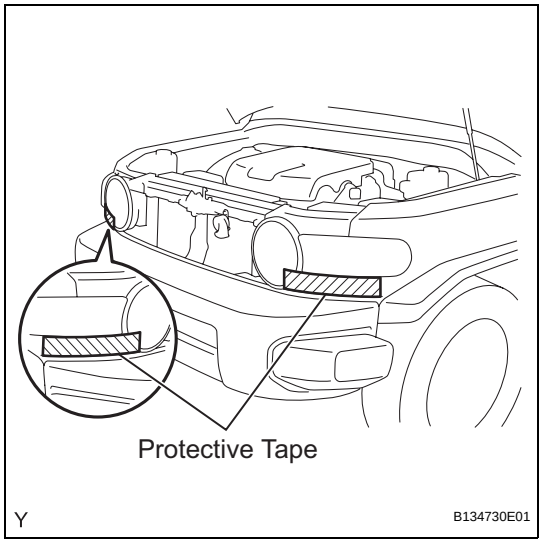

(e) Remove the protective tape.

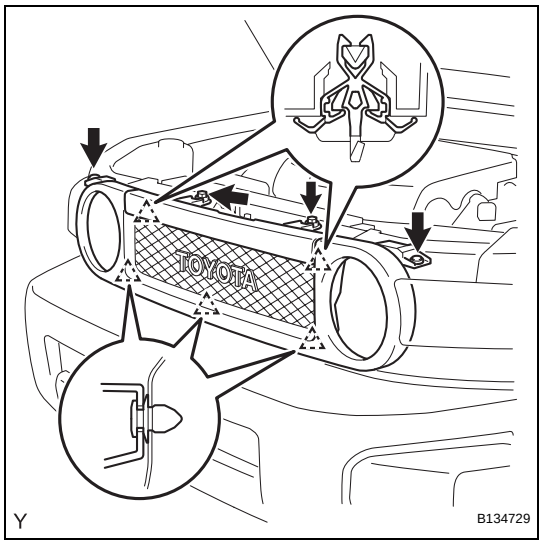

10. INSTALL RADIATOR GRILLE

(a) Engage the 5 clips and install the radiator grille.
(b) Tighten the 2 screws.
Torque: 3.0 N*m (30 kgf*cm, 27 in.*lbf)
(c) Install the 2 clips.

REAR BUMPER

COMPONENTS

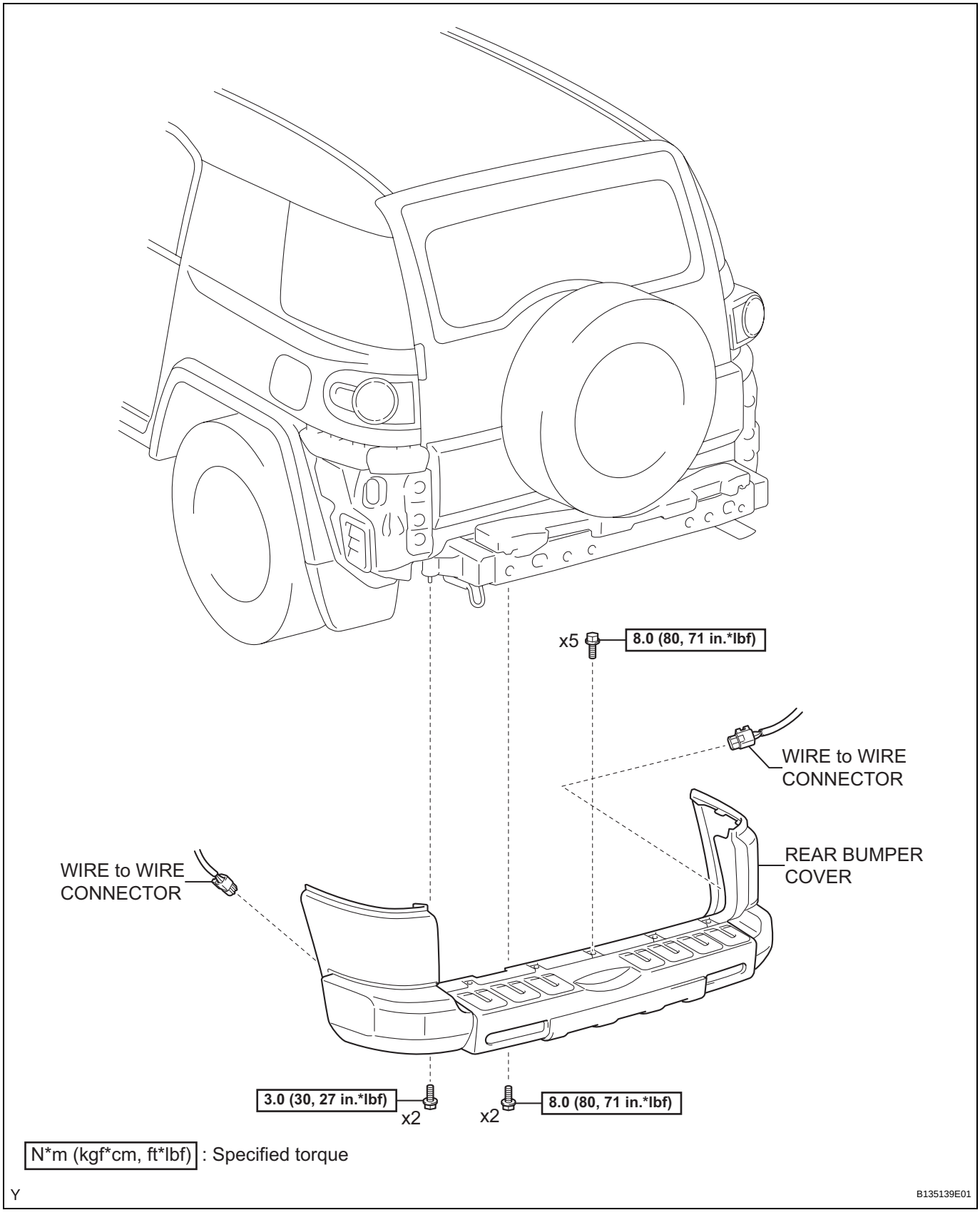

N*m (kgf*cm, ft*lbf) : Specified torque

Y

B135139E01

ET

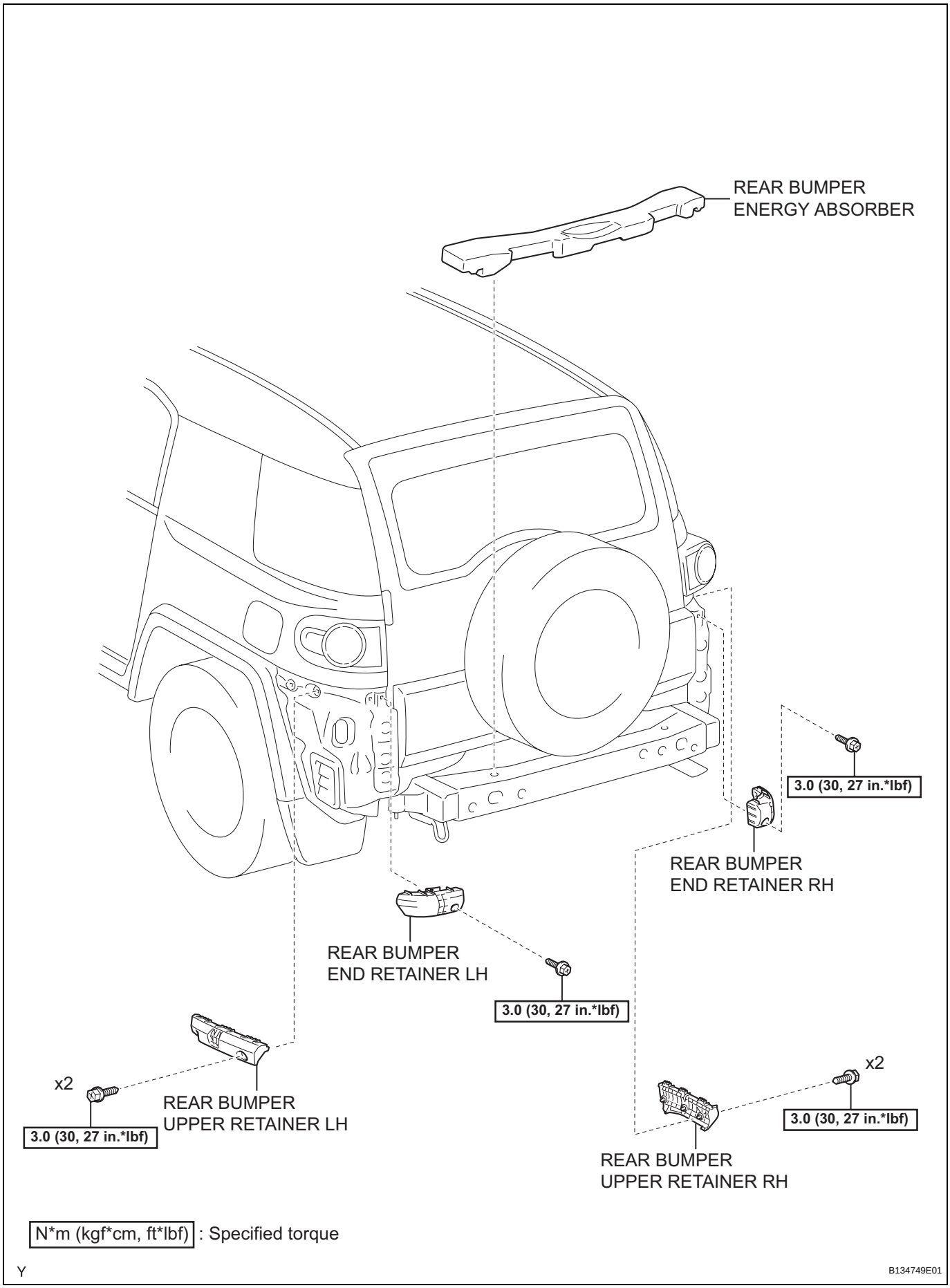
REAR BUMPER
ENERGY ABSORBER
3.0 (30, 27 in.*lbf)
REAR BUMPER
END RETAINER RH
REAR BUMPER
END RETAINER LH
3.0 (30, 27 in.*lbf)
x2
REAR BUMPER
UPPER RETAINER LH
3.0 (30, 27 in.*lbf)
x2
3.0 (30, 27 in.*lbf)
REAR BUMPER
UPPER RETAINER RH
N*m (kgf*cm, ft*lbf) : Specified torque
Y
B134749E01

ET

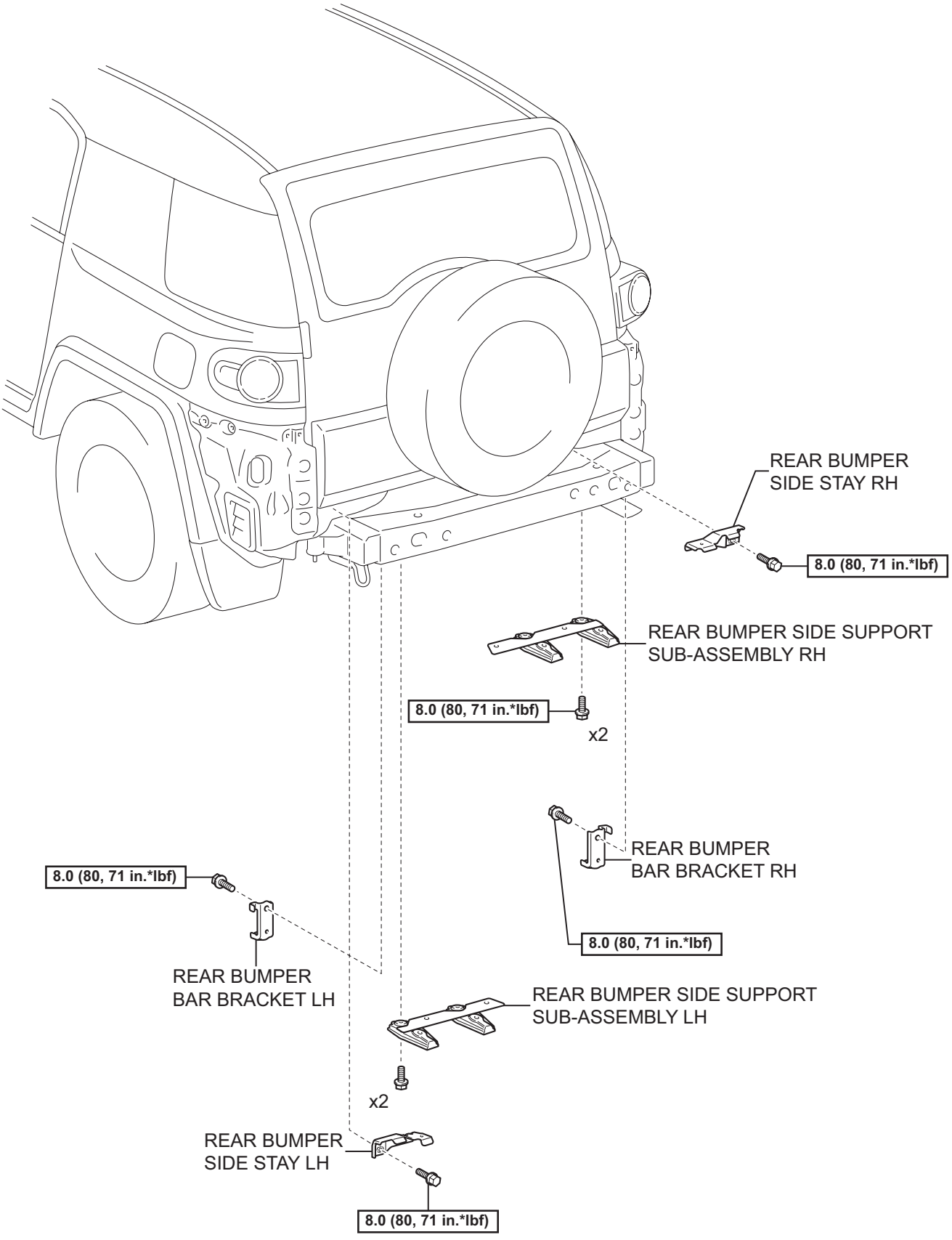

N*m (kgf*cm, ft*lbf) : Specified torque

Y

B138425E01

ET

w/ Back Sonar:

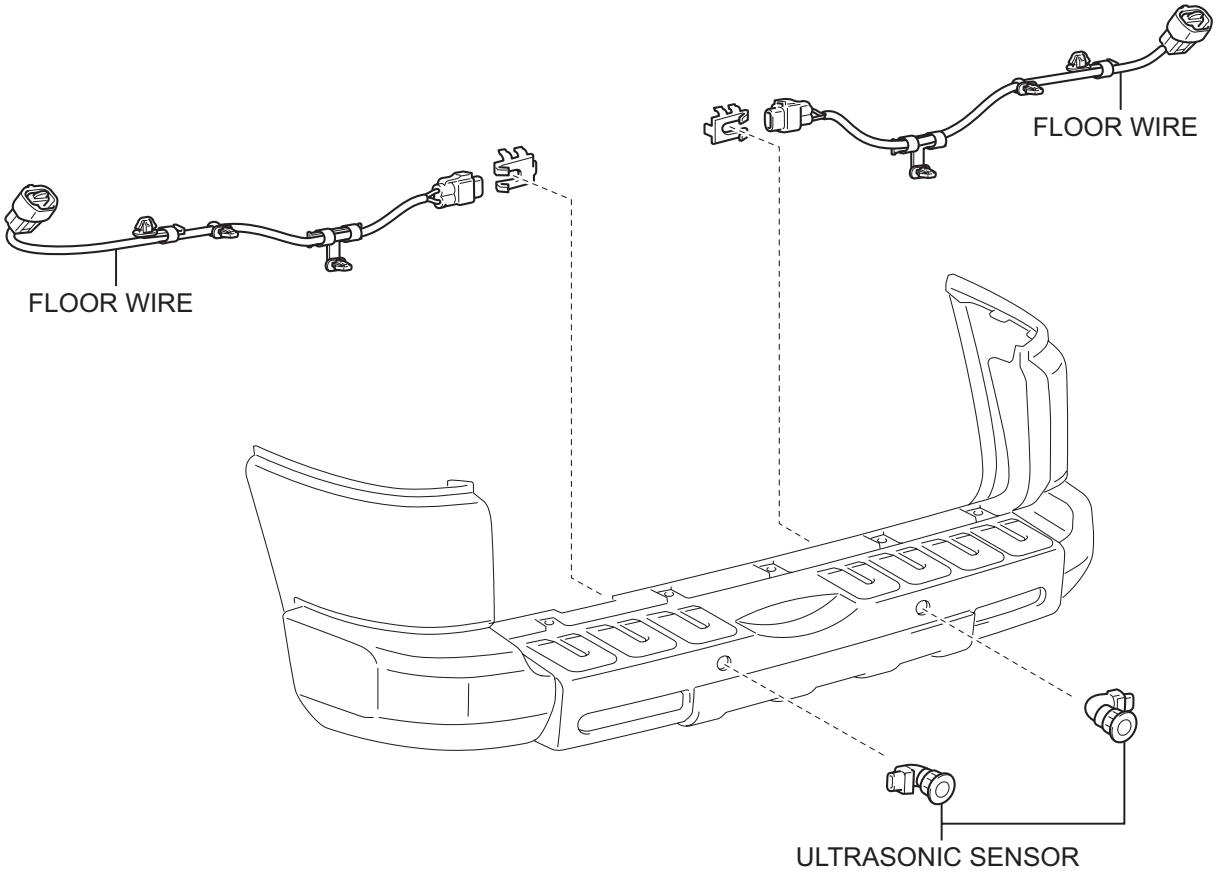

Y

B135144E01

ET

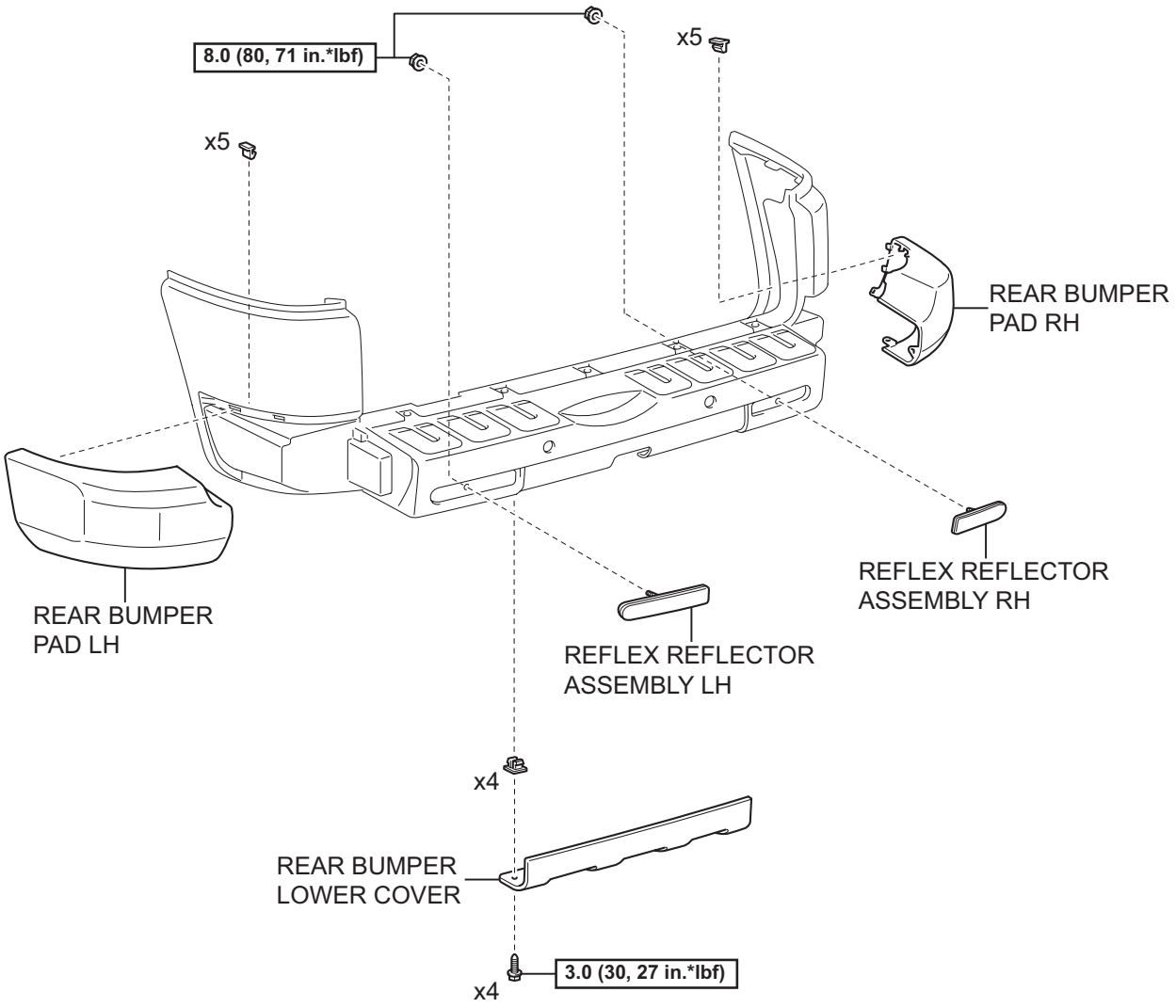

N*m (kgf*cm, ft*lbf) : Specified torque

Y

B135147E01

ET

REMOVAL

1. DISCONNECT CABLE FROM NEGATIVE BATTERY TERMINAL

2. REMOVE REAR BUMPER COVER

(a) Apply protective tape as shown in the illustration.

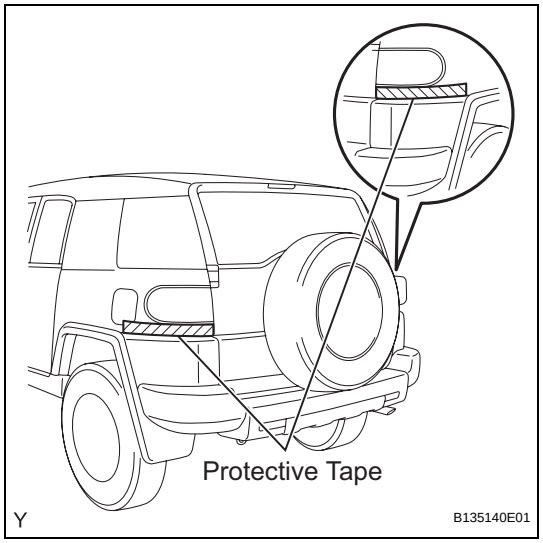

(b) Remove the 7 bolts and the 2 screws.

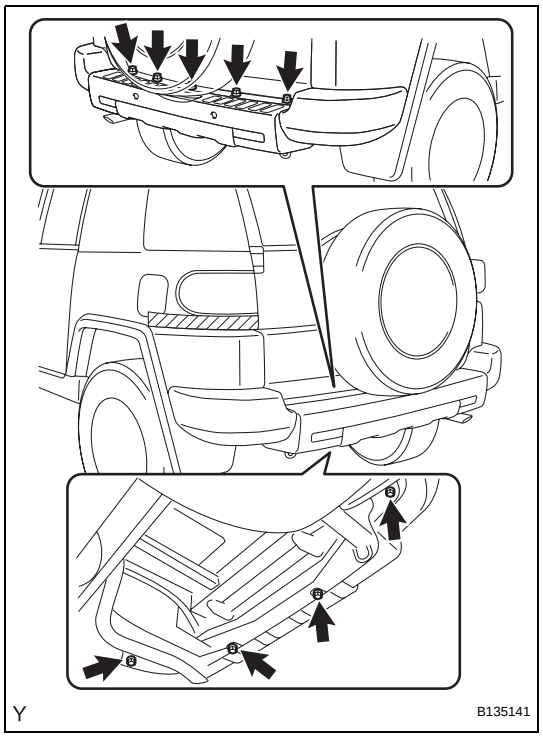

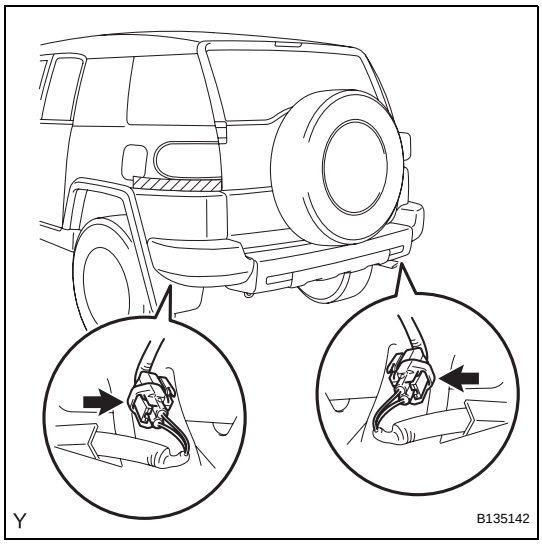

(c) w/ Back Sonar:
(1) Disconnect the 2 wire to wire connectors.

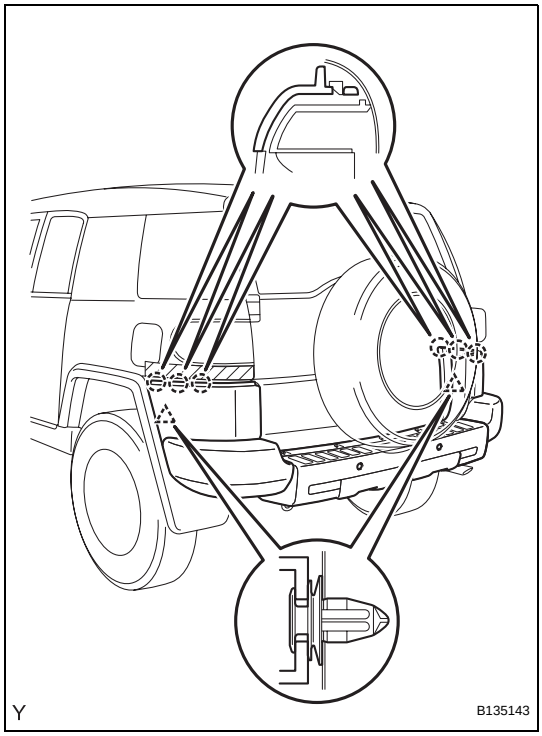

(d) Disengage the 6 claws and the 2 clips and remove the rear bumper cover.

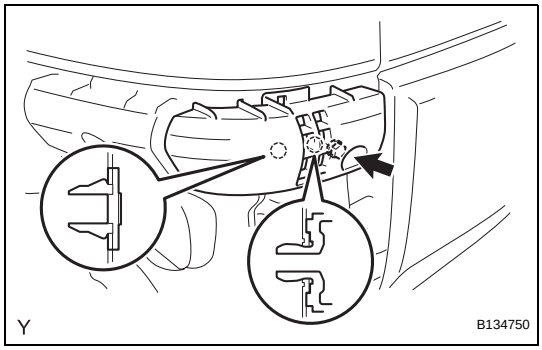

3. REMOVE REAR BUMPER END RETAINER LH
(a) Remove the screw.
(b) Disengage the 2 claws and remove the rear bumper end retainer.

4. REMOVE REAR BUMPER END RETAINER RH
HINT:
Use the same procedure as for the LH side.

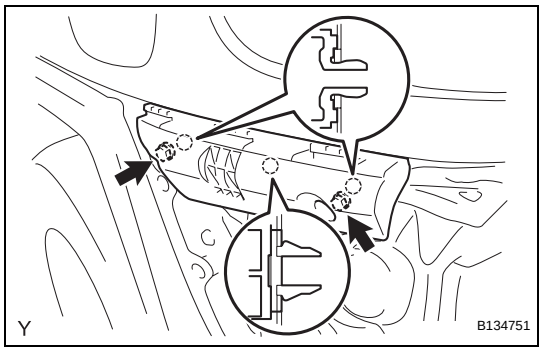

5. REMOVE REAR BUMPER UPPER RETAINER LH
(a) Remove the 2 screws.
(b) Disengage the 3 claws and remove the rear bumper upper retainer.

6. REMOVE REAR BUMPER UPPER RETAINER RH
HINT:
Use the same procedure as for the LH side.

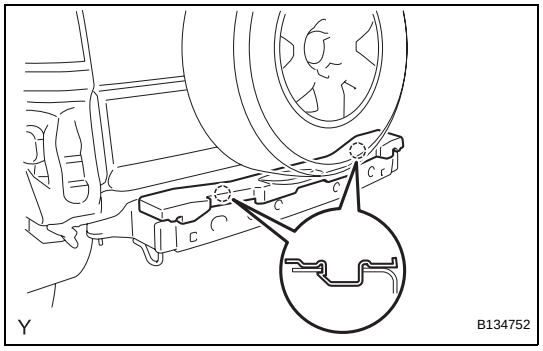

7. REMOVE REAR BUMPER ENERGY ABSORBER
(a) Disengage the 2 claws and remove the rear bumper energy absorber.

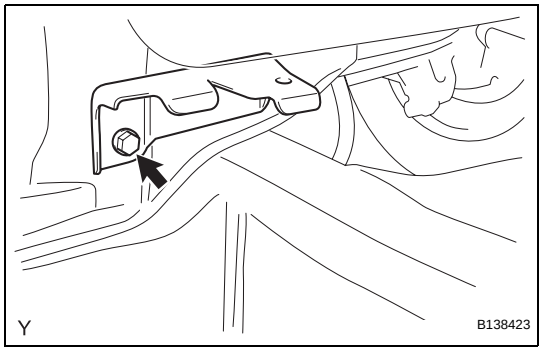

8. REMOVE REAR BUMPER SIDE STAY LH
(a) Remove the bolt and the rear bumper side stay.

9. REMOVE REAR BUMPER SIDE STAY RH
HINT:
Use the same procedure as for the LH side.

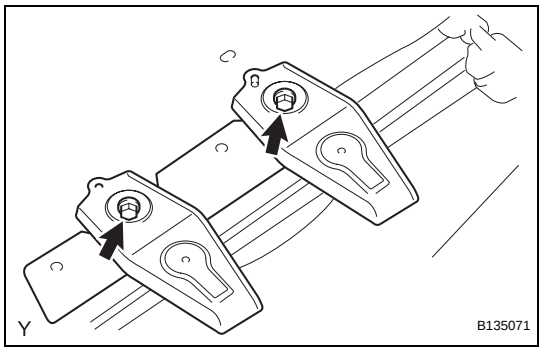

10. REMOVE REAR BUMPER SIDE SUPPORT SUB-ASSEMBLY LH
(a) Remove the 2 bolts and the rear bumper side support.

11. REMOVE REAR BUMPER SIDE SUPPORT SUB-ASSEMBLY RH
HINT:
Use the same procedure as for the LH side.

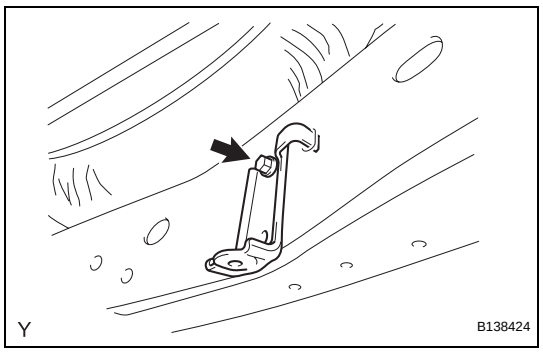

12. REMOVE REAR BUMPER BAR BRACKET LH
(a) Remove the bolt and the rear bumper bar bracket.

13. REMOVE REAR BUMPER BAR BRACKET RH
HINT:
Use the same procedure as for the LH side.

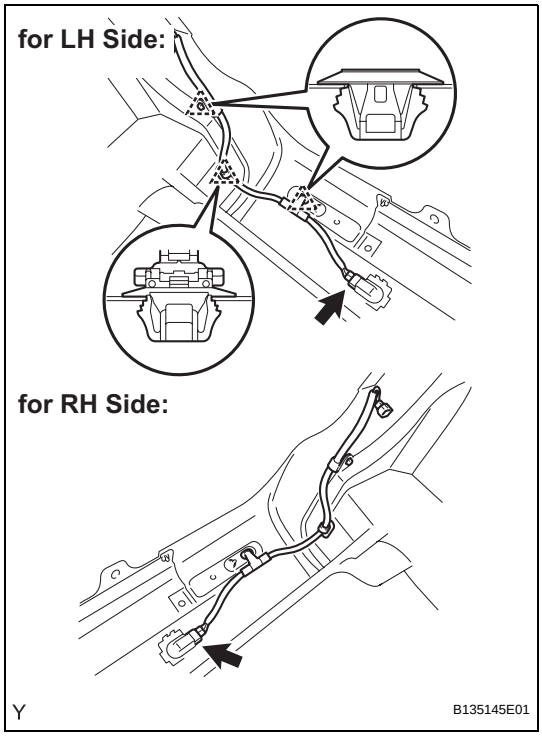

DISASSEMBLY

1. REMOVE FLOOR WIRE (w/ Back Sonar)

HINT:

Use the same procedure for both sides.

(a) Using a clip remover, remove the 3 clamps.

(b) Disconnect the ultrasonic sensor connector and remove the floor wire.

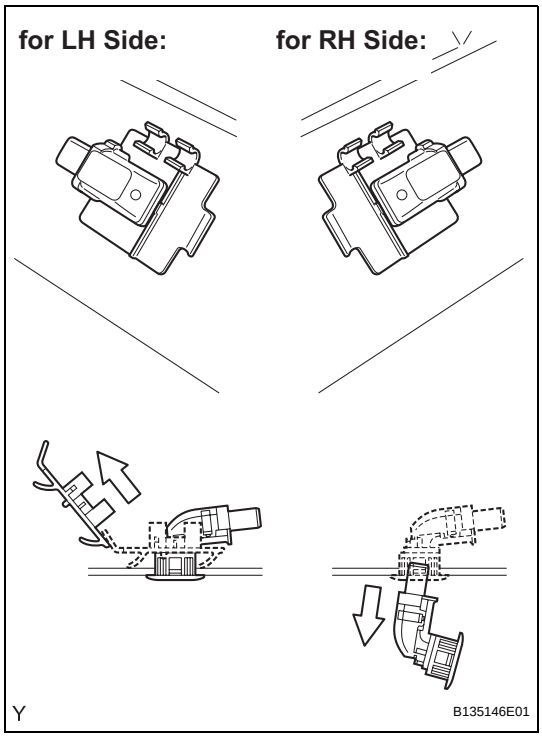

2. REMOVE ULTRASONIC SENSOR (w/ Back Sonar)

HINT:

Use the same procedure for both sides.

(a) Remove the retainer and the ultrasonic sensor as shown in the illustration.

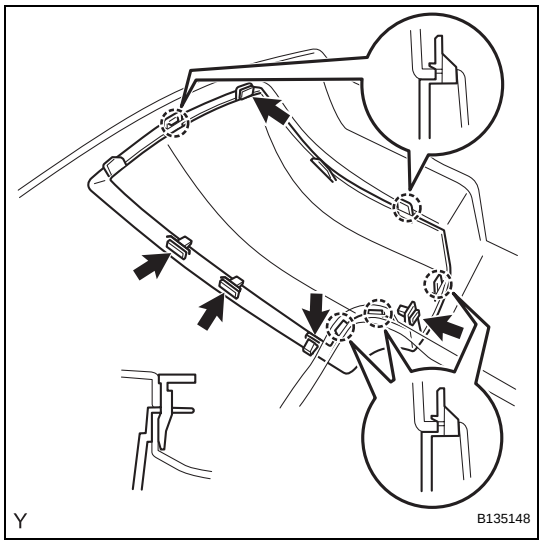

3. REMOVE REAR BUMPER PAD LH

(a) Remove the 5 retainers.

(b) Disengage the 5 claws and remove the rear bumper pad.

4. REMOVE REAR BUMPER PAD RH

HINT:

Use the same procedure as for the LH side.

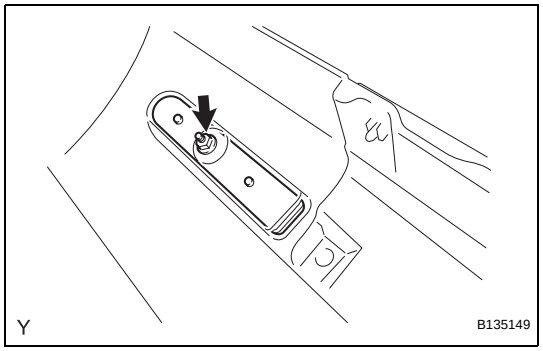

5. REMOVE REFLEX REFLECTOR ASSEMBLY LH

(a) Remove the nut and the reflex reflector.

6. REMOVE REFLEX REFLECTOR ASSEMBLY RH

HINT:

Use the same procedure as for the LH side.

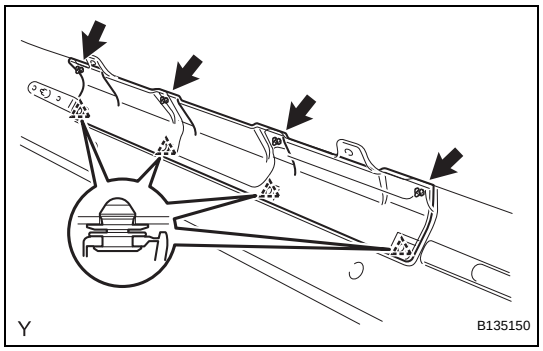

7. REMOVE REAR BUMPER LOWER COVER

(a) Remove the 4 screws.

(b) Disengage the 4 clips and remove the rear bumper lower cover.

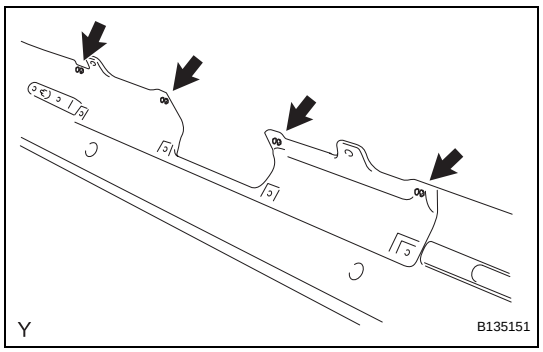

(c) Remove the 4 screw grommets.

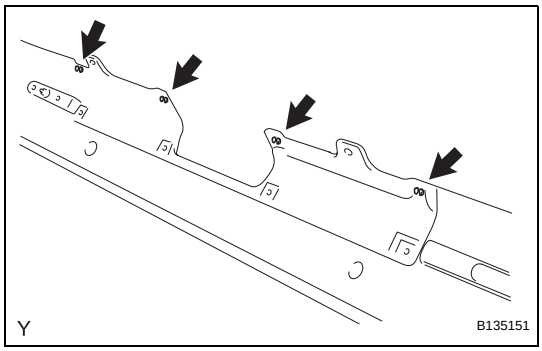

REASSEMBLY

1. INSTALL REAR BUMPER LOWER COVER

(a) Install the 4 screw grommets.

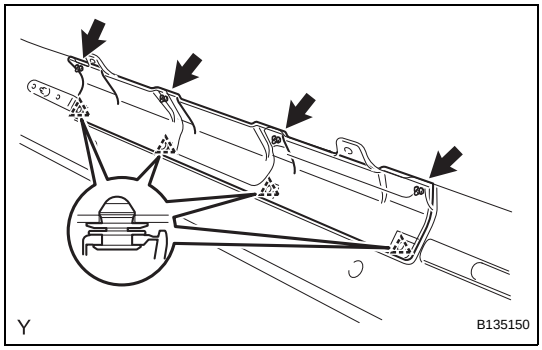

(b) Engage the 4 clips and install the rear bumper lower cover.

(c) Tighten the 4 screws.
Torque: 3.0 N*m (30 kgf*cm, 27 in.*lbf)

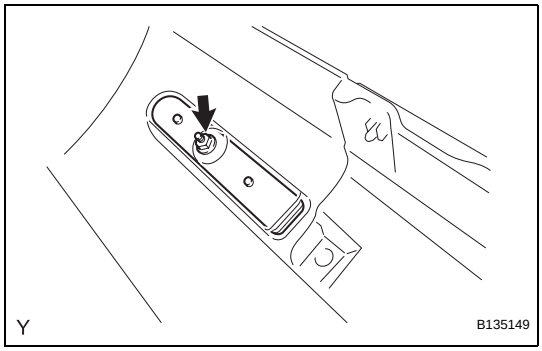

2. INSTALL REFLEX REFLECTOR ASSEMBLY LH

(a) Install the reflex reflector with the nut.
Torque: 8.0 N*m (80 kgf*cm, 71 in.*lbf)

3. INSTALL REFLEX REFLECTOR ASSEMBLY RH

HINT:
Use the same procedure as for the LH side.

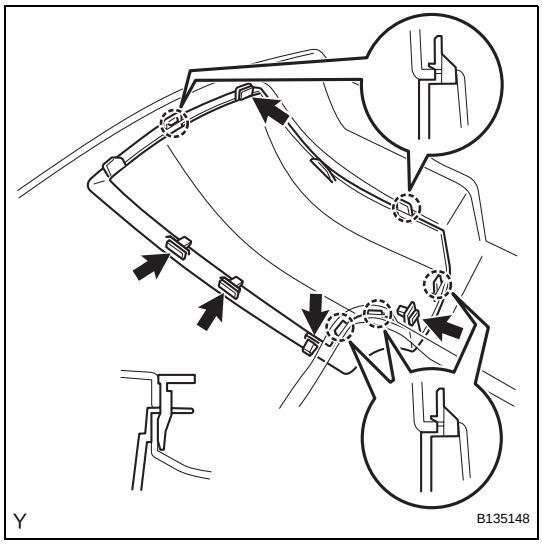

4. INSTALL REAR BUMPER PAD LH

(a) Engage the 5 claws and install the rear bumper pad.

(b) Install the 5 retainers.

5. INSTALL REAR BUMPER PAD RH

HINT:
Use the same procedure as for the LH side.

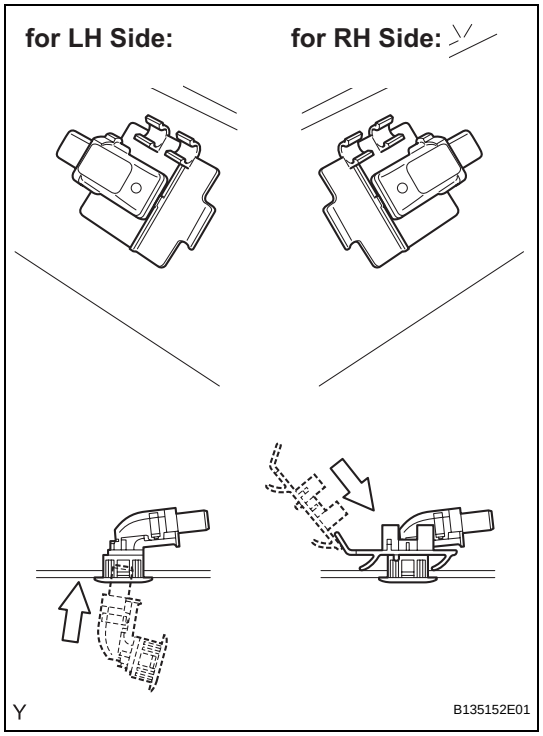

6. INSTALL ULTRASONIC SENSOR (w/ Back Sonar)

HINT:

Use the same procedure for both sides.

(a) Install the ultrasonic sensor with the retainer as shown in the illustration.

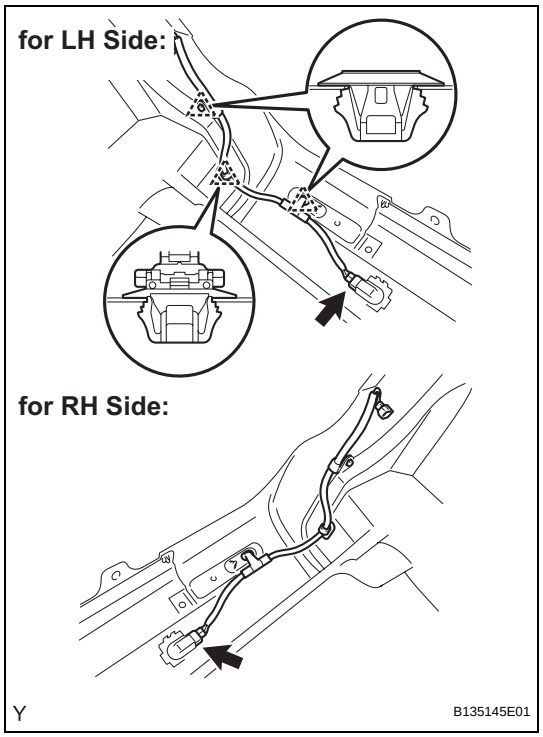

7. INSTALL FLOOR WIRE (w/ Back Sonar)

HINT:

Use same procedure for both sides.

(a) Connect the ultrasonic sensor connector.

(b) Install the floor wire with the 3 clamps.

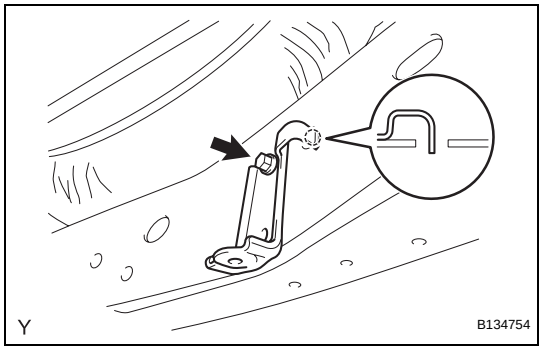

INSTALLATION

1. INSTALL REAR BUMPER BAR BRACKET LH

(a) Insert the hook into the body hole and install the rear bumper bar bracket with the bolt.
Torque: 8.0 N*m (80 kgf*cm, 71 in.*lbf)

2. INSTALL REAR BUMPER BAR BRACKET RH

HINT:

Use the same procedure as for the LH side.

ET

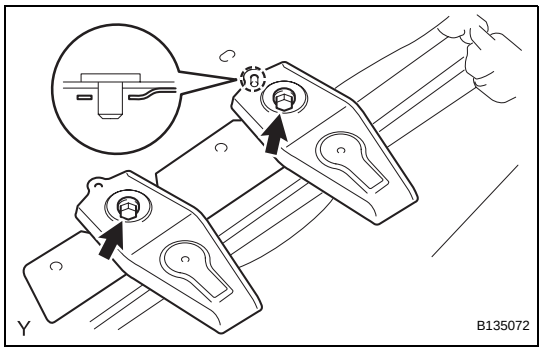

3. INSTALL REAR BUMPER SIDE SUPPORT SUB-ASSEMBLY LH

(a) Align the locating pin with the hole and install the rear bumper side support with the 2 bolts.
Torque: 8.0 N*m (80 kgf*cm, 71 in.*lbf)

4. INSTALL REAR BUMPER SIDE SUPPORT SUB-ASSEMBLY RH

HINT:
Use the same procedure as for the LH side.

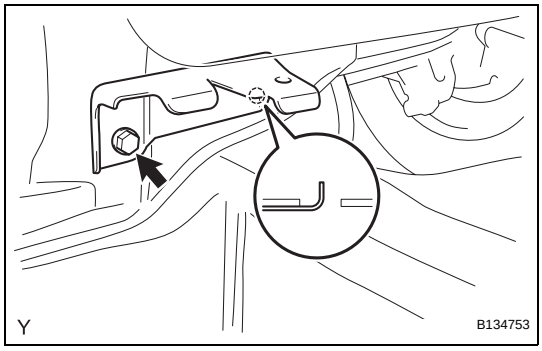

5. INSTALL REAR BUMPER SIDE STAY LH

(a) Insert the hook into the body hole and install the rear bumper side stay with the bolt.
Torque: 8.0 N*m (80 kgf*cm, 71 in.*lbf)

6. INSTALL REAR BUMPER SIDE STAY RH

HINT:
Use the same procedure as for the LH side.

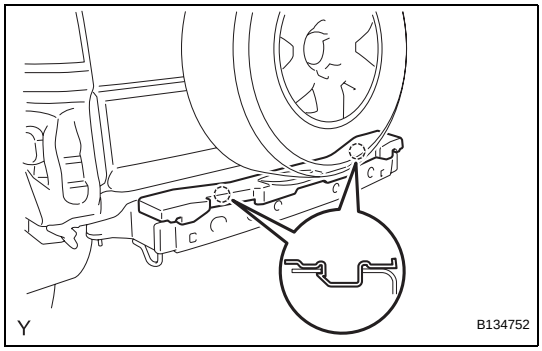

7. INSTALL REAR BUMPER ENERGY ABSORBER

(a) Engage the 2 claws and install the rear bumper energy absorber.

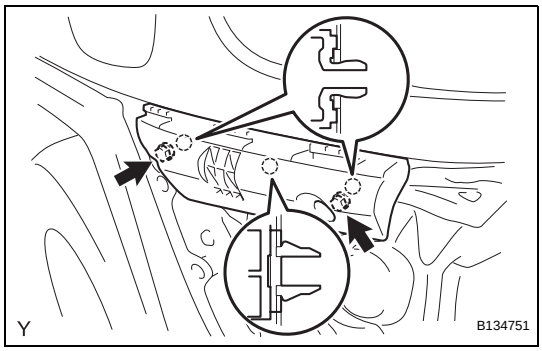

8. INSTALL REAR BUMPER UPPER RETAINER LH

(a) Engage the 3 claws and install the rear bumper upper retainer.
(b) Tighten the 2 screws.
Torque: 3.0 N*m (30 kgf*cm, 27 in.*lbf)

9. INSTALL REAR BUMPER UPPER RETAINER RH

HINT:
Use the same procedure as for the LH side.

ET

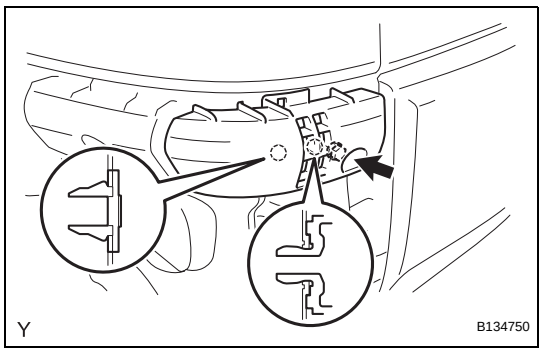

10. INSTALL REAR BUMPER END RETAINER LH

(a) Engage the 2 claws and install the rear bumper end retainer.
(b) Tighten the screw.
Torque: 3.0 N*m (30 kgf*cm, 27 in.*lbf)

11. INSTALL REAR BUMPER END RETAINER RH

HINT:
Use the same procedure as for the LH side.

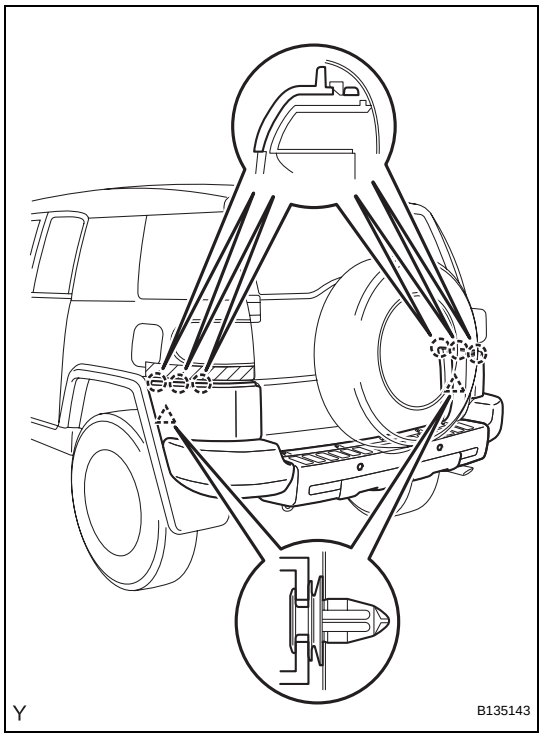

12. INSTALL REAR BUMPER COVER

(a) Engage the 6 claws and the 2 clips and install the rear bumper cover.

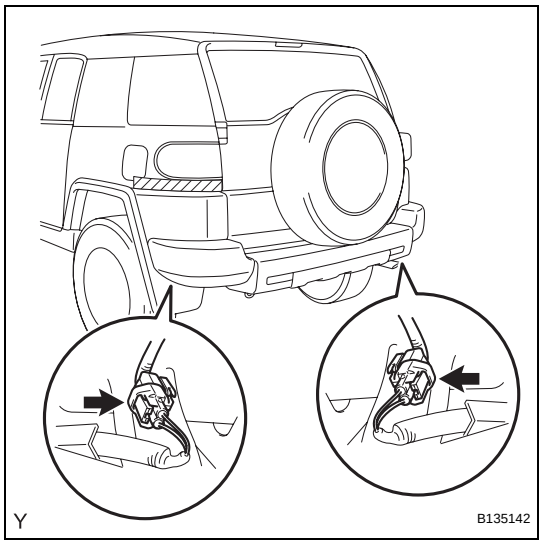

(b) w/ Back Sonar:

(1) Connect the 2 wire to wire connectors.

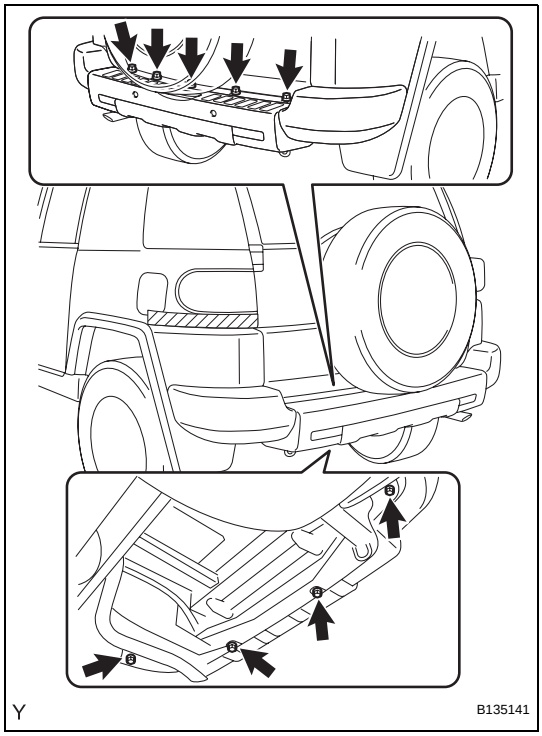

(c) Tighten the 7 bolts and the 2 screws.
Torque: 8.0 N*m (80 kgf*cm, 71 in.*lbf) for bolt
3.0 N*m (30 kgf*cm, 27 in.*lbf) for screw

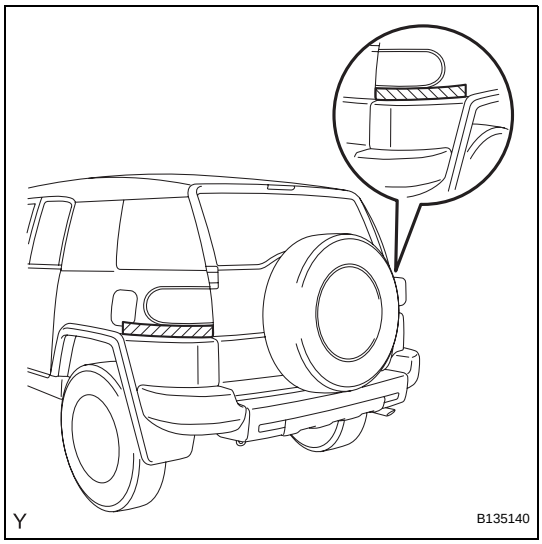

(d) Remove the protective tape.

13. CONNECT CABLE TO NEGATIVE BATTERY TERMINAL
Torque: 3.9 N*m (40 kgf*cm, 35 in.*lbf)

NAME PLATE

COMPONENTS

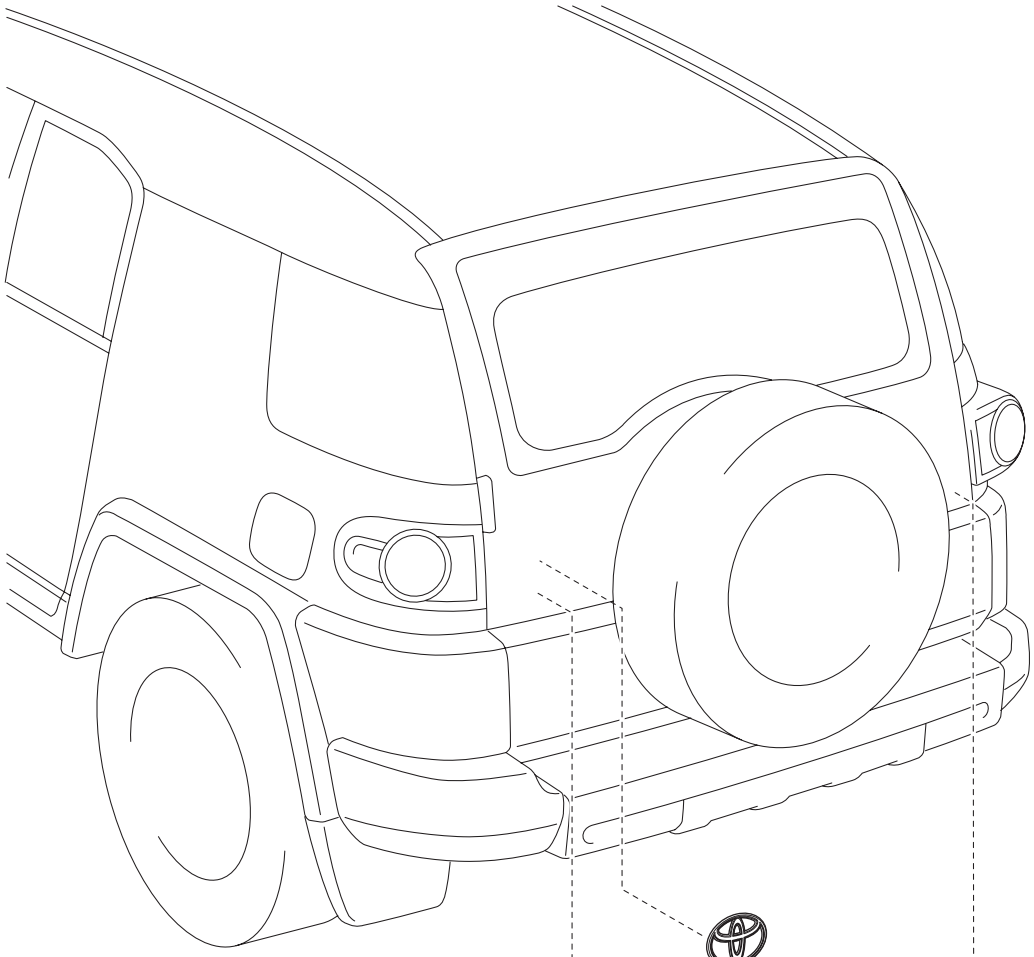

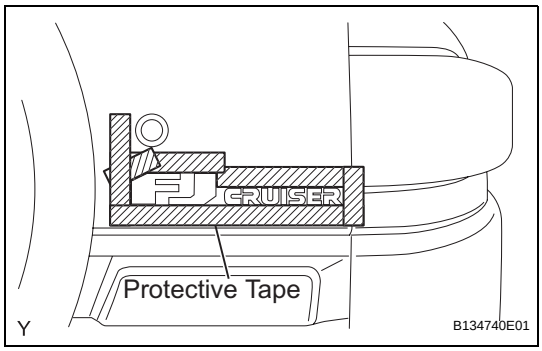

REMOVAL

1. REMOVE NO. 1 BACK DOOR NAME PLATE

(a) Apply protective tape to the back door panel in the area around the No. 1 back door name plate.

(b) Using an infrared light, heat the No. 1 back door name plate.

CAUTION:
Do not burn yourself with the heated back door panel or infrared light.

HINT:
Heat at 40 to 60°C (104 to 140°F) for 1 to 2 minutes.

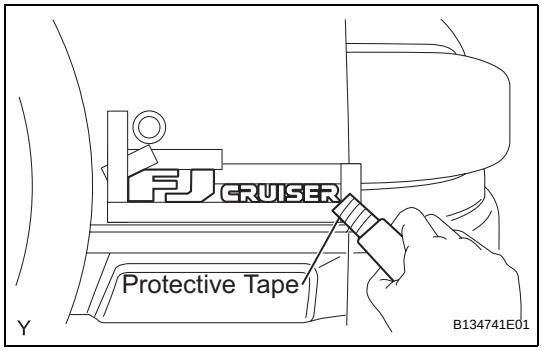

(c) Using a gasket scraper with its tip wrapped in protective tape, gradually peel the adhesive surface and remove the No. 1 back door name plate.

(d) Remove the protective tape.

2. REMOVE NO. 2 BACK DOOR NAME PLATE

(a) Apply protective tape to the back door panel in the area around the No. 2 back door name plate.

(b) Using an infrared light, heat the No. 2 back door name plate.

CAUTION:
Do not burn yourself with the heated back door panel or infrared light.

HINT:
Heat at 40 to 60°C (104 to 140°F) for 1 to 2 minutes.

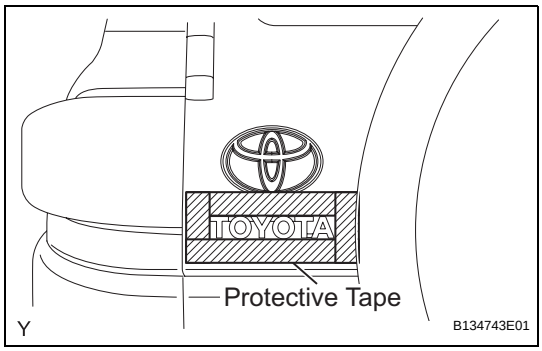

(c) Using a gasket scraper with its tip wrapped in protective tape, gradually peel the adhesive surface and remove the No. 2 back door name plate.

(d) Remove the protective tape.

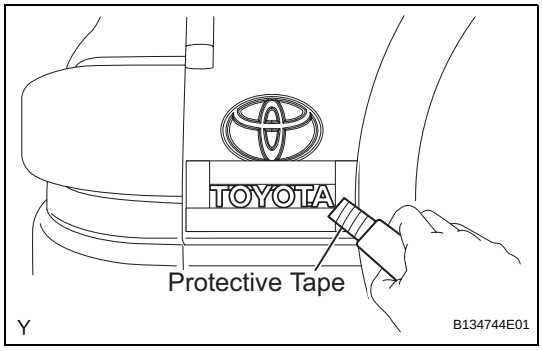

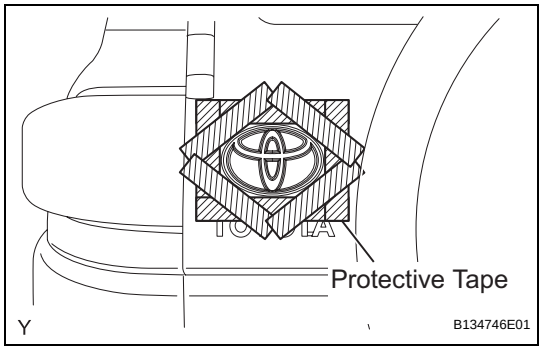

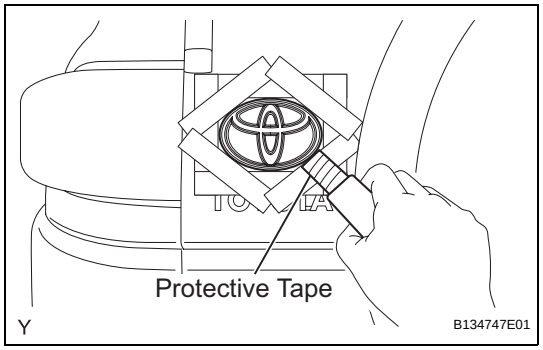

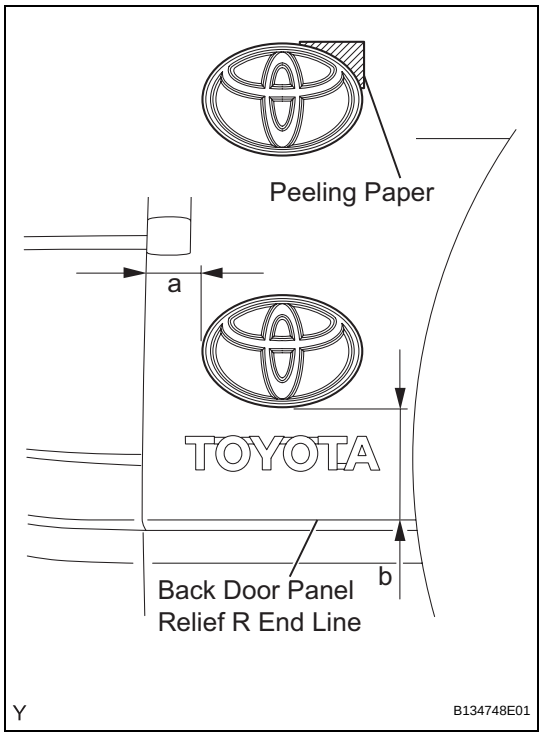

3. REMOVE REAR NAME PLATE

(a) Apply protective tape to the back door panel in the area around the rear name plate.

(b) Using an infrared light, heat the rear name plate.
CAUTION:
Do not burn yourself with the heated back door panel or infrared light.
HINT:
Heat at 40 to 60°C (104 to 140°F) for 1 to 2 minutes.

(c) Using a gasket scraper with its tip wrapped in protective tape, gradually peel the adhesive surface and remove the rear name plate.

(d) Remove the protective tape.

INSTALLATION

1. INSTALL REAR NAME PLATE

(a) Clean the attachment surface.

(1) Using an infrared light, heat the double-sided adhesive tape remaining on the back door panel.
HINT:
Heat at 40 to 60°C (104 to 140°F) for 1 to 2 minutes.

(2) Using a shop rag or piece of cloth, rub the remaining double-sided adhesive tape off the back door panel while it is hot from the infrared light.
NOTICE:
Installing the rear name plate while any double-sided adhesive tape remains on the back door panel may cause adhesion failure. Therefore, completely remove the double-sided adhesive tape.

(3) Using a non-residue solvent, clean the attachment surface.

(b) Align the 2 pins and install a new rear name plate as shown in the illustration.
Installation position

Mark	Measurement (along surface)
a	49 mm (1.929 in.)
b	56.7 mm (2.232 in.)

ET

NOTICE:
Install the rear name plate in an environment where the ambient temperature is over 20°C (68°F). If it is below 20°C (68°F), using an infrared light, heat the back door panel and the rear name plate up to 20 to 30°C (68 to 86°F) and install the rear name plate.

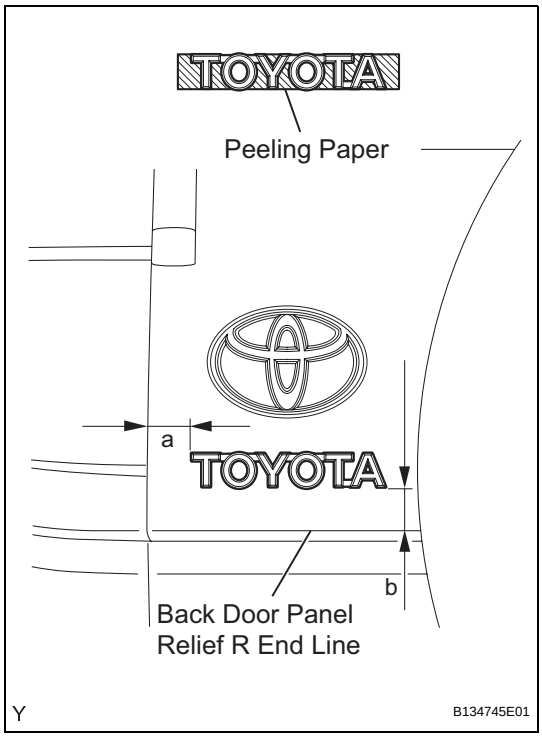

2. INSTALL NO. 2 BACK DOOR NAME PLATE

(a) Clean the attachment surface.
  (1) Using an infrared light, heat the double-sided adhesive tape remaining on the back door panel.
  HINT:
  Heat at 40 to 60°C (104 to 140°F) for 1 to 2 minutes.
  (2) Using a shop rag or piece of cloth, rub the remaining double-sided adhesive tape off the back door panel while it is hot from the infrared light.
  NOTICE:
  Installing the No. 2 back door name plate while any double-sided adhesive tape remains on the back door panel may cause adhesion failure. Therefore, completely remove the double-sided adhesive tape.
  (3) Using a non-residue solvent, clean the attachment surface.

(b) Install a new No. 2 back door name plate as shown in the illustration.
  Installation position

Mark	Measurement (along surface)
a	37 mm (1.457 in.)
b	14.5 mm (0.571 in.)

NOTICE:
Install the back door name plate in an environment where the ambient temperature is over 20°C (68°F). If it is below 20°C (68°F), using an infrared light, heat the back door panel and the No. 2 back door name plate up to 20 to 30°C (68 to 86°F) and install the No. 2 back door name plate.

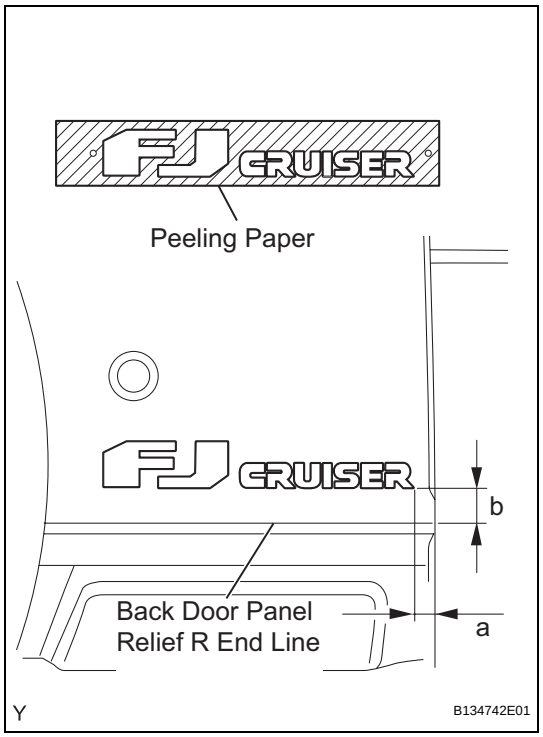

3. INSTALL NO. 1 BACK DOOR NAME PLATE

(a) Clean the attachment surface.

(1) Using an infrared light, heat the double-sided adhesive tape remaining on the back door panel.
HINT:
Heat at 40 to 60°C (104 to 140°F) for 1 to 2 minutes.

(2) Using a shop rag or piece of cloth, rub the remaining double-sided adhesive tape off the back door panel while it is hot from the infrared light.
NOTICE:
Installing the No. 1 back door name plate while any double-sided adhesive tape remains on the back door panel may cause adhesion failure. Therefore, completely remove the double-sided adhesive tape.

(3) Using a non-residue solvent, clean the attachment surface.

(b) Install a new No. 1 back door name plate as shown in the illustration.
Installation position

Mark	Measurement (along surface)
a	28.4 mm (1.118 in.)
b	11.5 mm (0.453 in.)

NOTICE:
Install the No. 1 back door name plate in an environment where the ambient temperature is over 20 °C (68°F). If it is below 20°C (68°F), using an infrared light, heat the back door panel and the No. 1 back door name plate up to 20 to 30°C (68 to 86°F) and install the No. 1 back door name plate.

REAR SPOILER

COMPONENTS

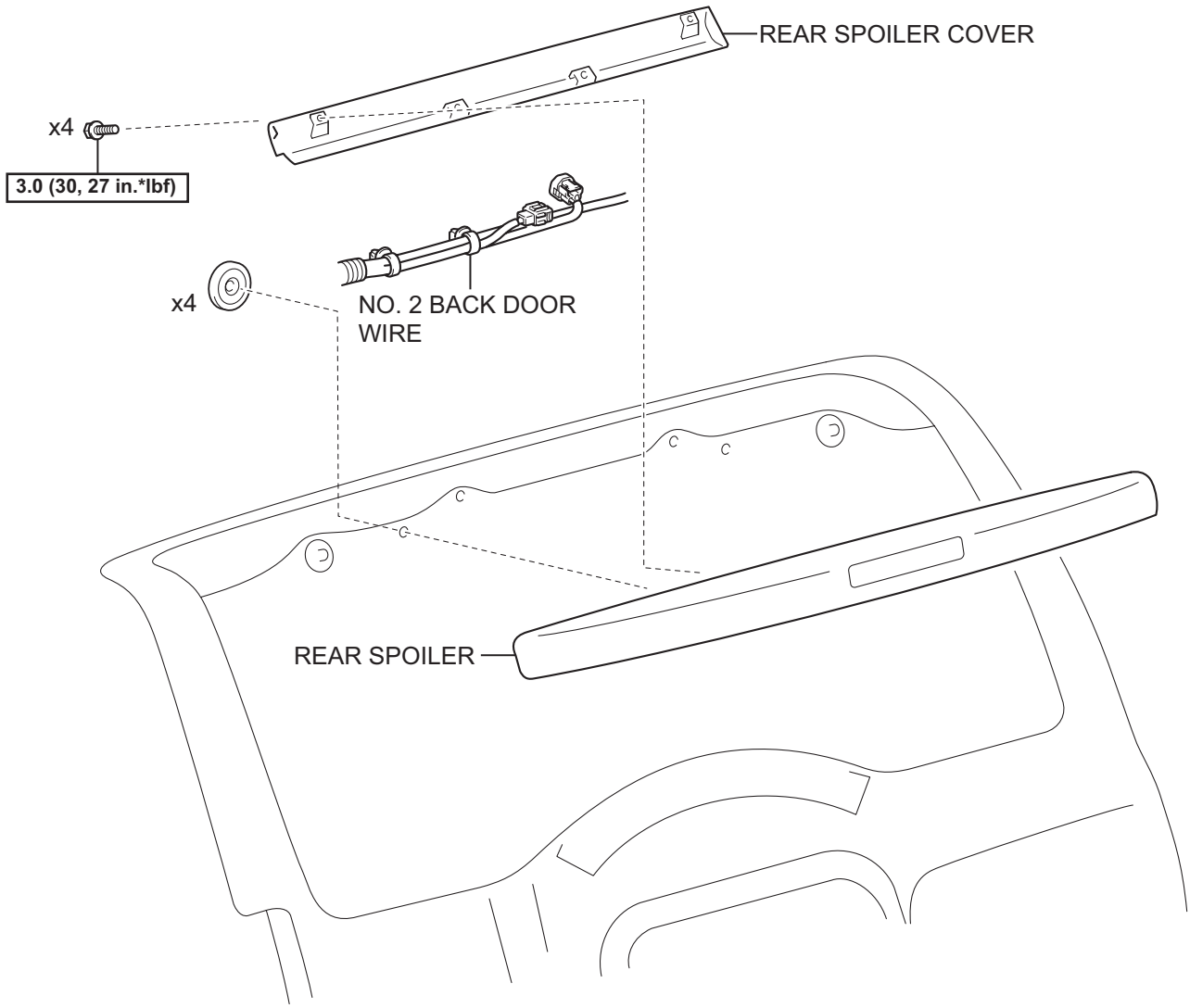

N*m (kgf*cm, ft*lbf) : Specified torque

Y

B135159E01

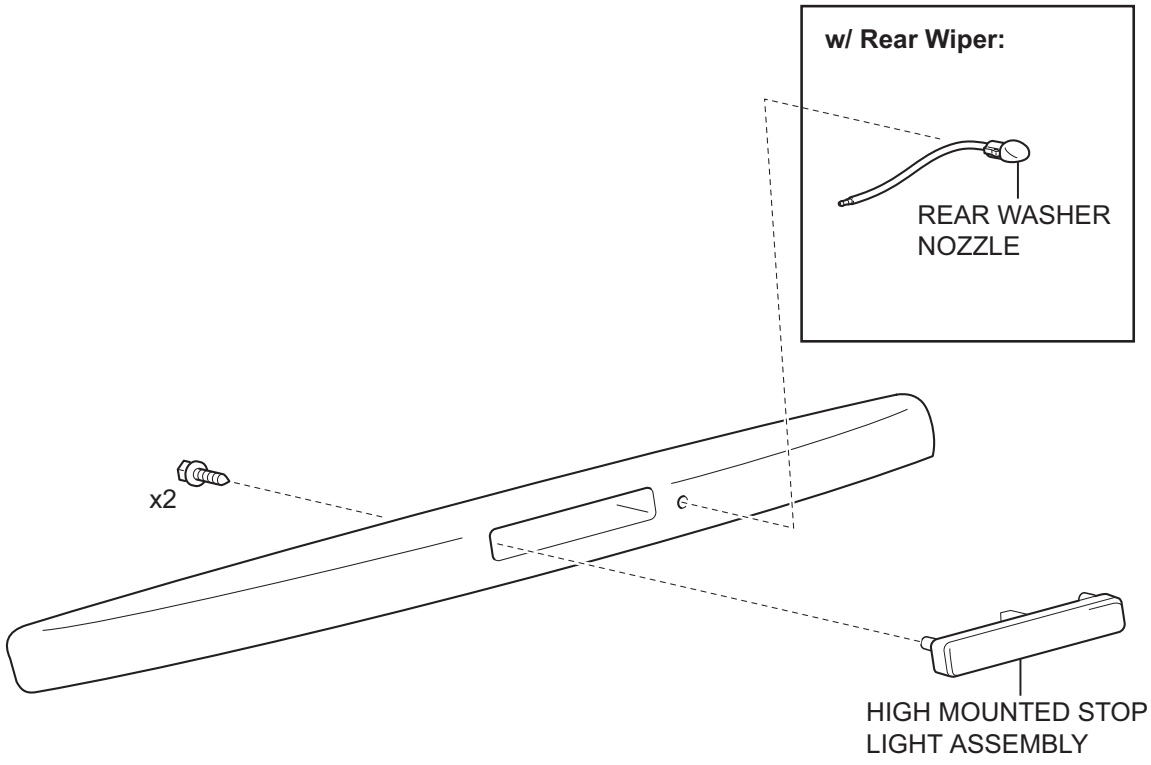

Y

B135160E01

REMOVAL

1. DISCONNECT CABLE FROM NEGATIVE BATTERY TERMINAL

2. REMOVE REAR SPOILER COVER

(a) Remove the 4 screws and the rear spoiler cover.

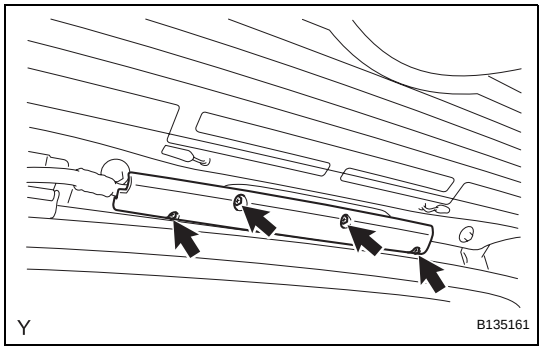

3. REMOVE REAR SPOILER

(a) Disconnect high mounted stop light connector.
(b) Using a clip remover, remove the 3 clamps.
(c) Remove the washer hose from the claw of the rear spoiler.
(d) Disconnect the washer hose.

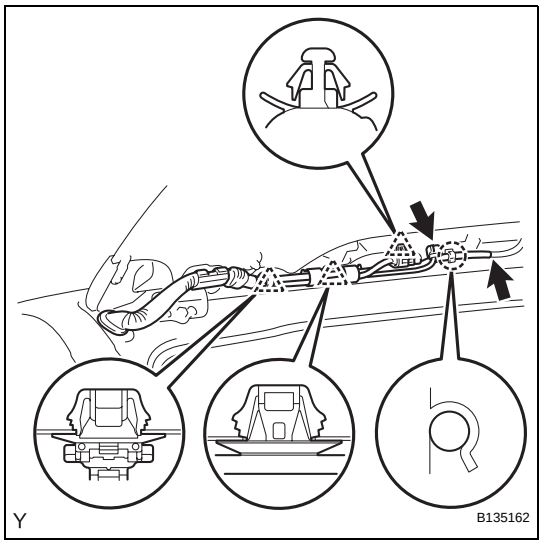

(e) Remove the 4 nuts.

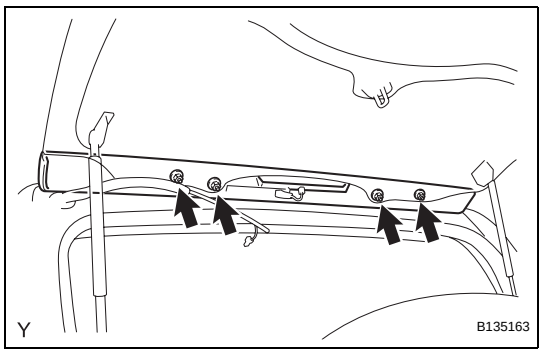

DISASSEMBLY

1. REMOVE REAR WASHER NOZZLE (w/ Rear Wiper)

(a) Disengage the 2 claws and remove the rear washer nozzle.

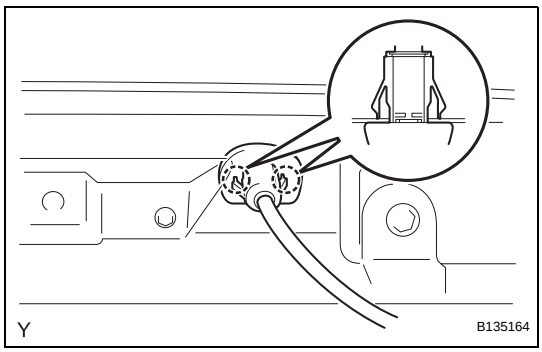

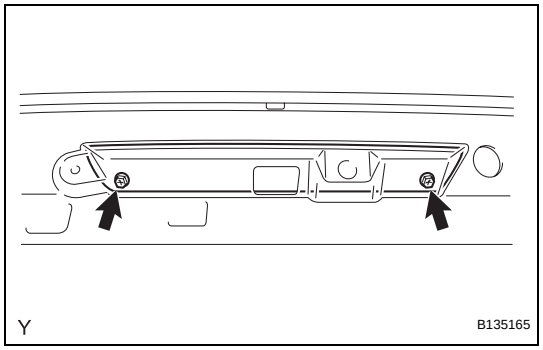

2. REMOVE HIGH MOUNTED STOP LIGHT ASSEMBLY
(a) Remove the 2 screws and the high mounted stop light.

REASSEMBLY

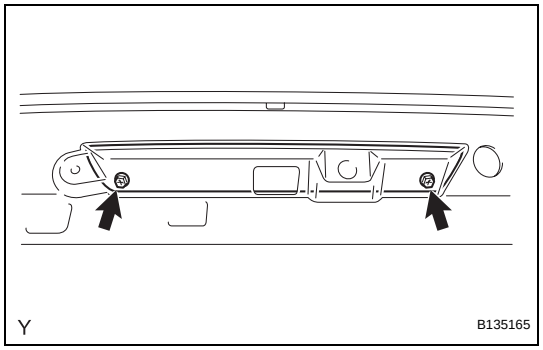

1. INSTALL HIGH MOUNTED STOP LIGHT ASSEMBLY
(a) Install the high mounted stop light with the 2 screws.

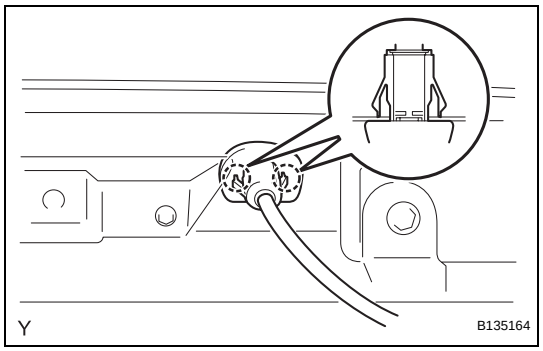

2. INSTALL REAR WASHER NOZZLE (w/ Rear Wiper)
(a) Engage the 2 claws and install the rear washer nozzle.

INSTALLATION

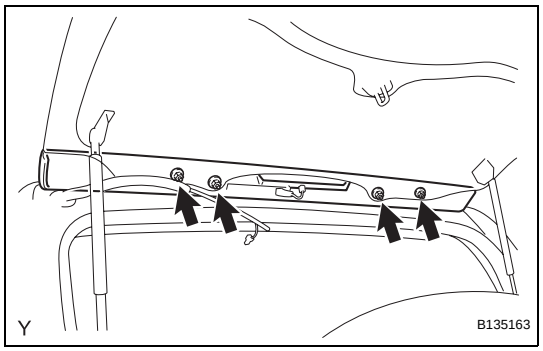

1. INSTALL REAR SPOILER
(a) Install the rear spoiler with the 4 nuts.

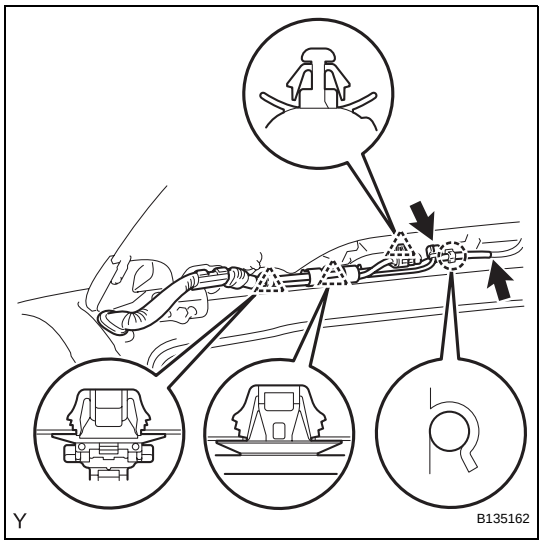

(b) w/ Rear Wiper:
  (1) Connect the washer hose.
(c) Install the washer hose into the claw of the rear spoiler.
(d) Install the 3 clamps.
(e) Connect the high mounted stop light connector.

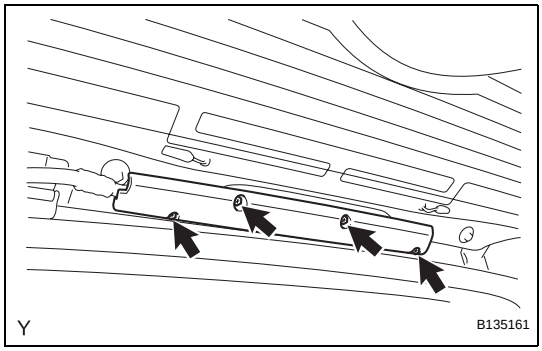

2. INSTALL REAR SPOILER COVER

(a) Install the rear spoiler cover with the 4 screws.
Torque: 3.0 N*m (30 kgf*cm, 27 in.*lbf)

3. CONNECT CABLE TO NEGATIVE BATTERY TERMINAL
Torque: 3.9 N*m (40 kgf*cm, 35 in.*lbf)

FRONT DOOR GLASS WEATHERSTRIP

COMPONENTS

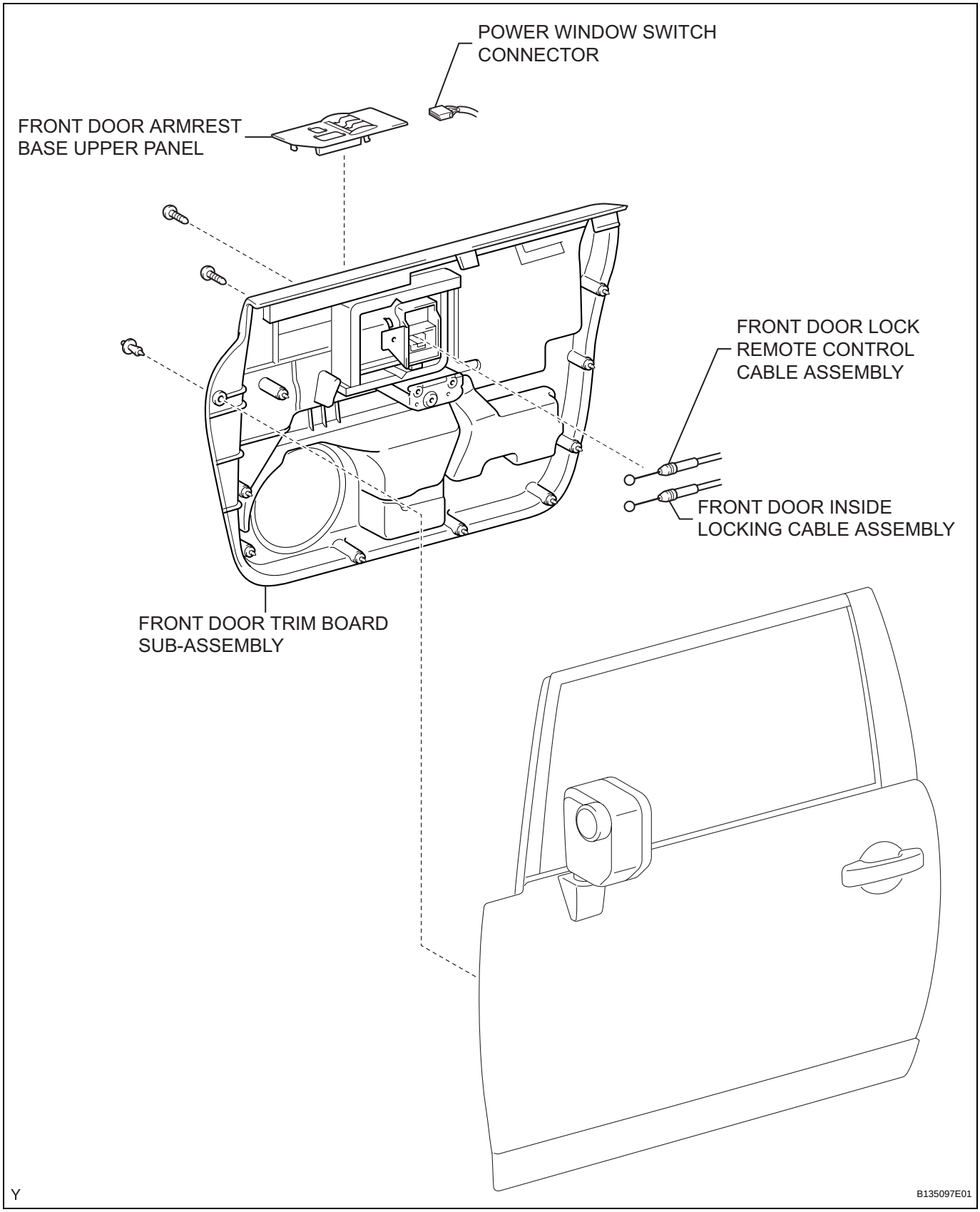

ET

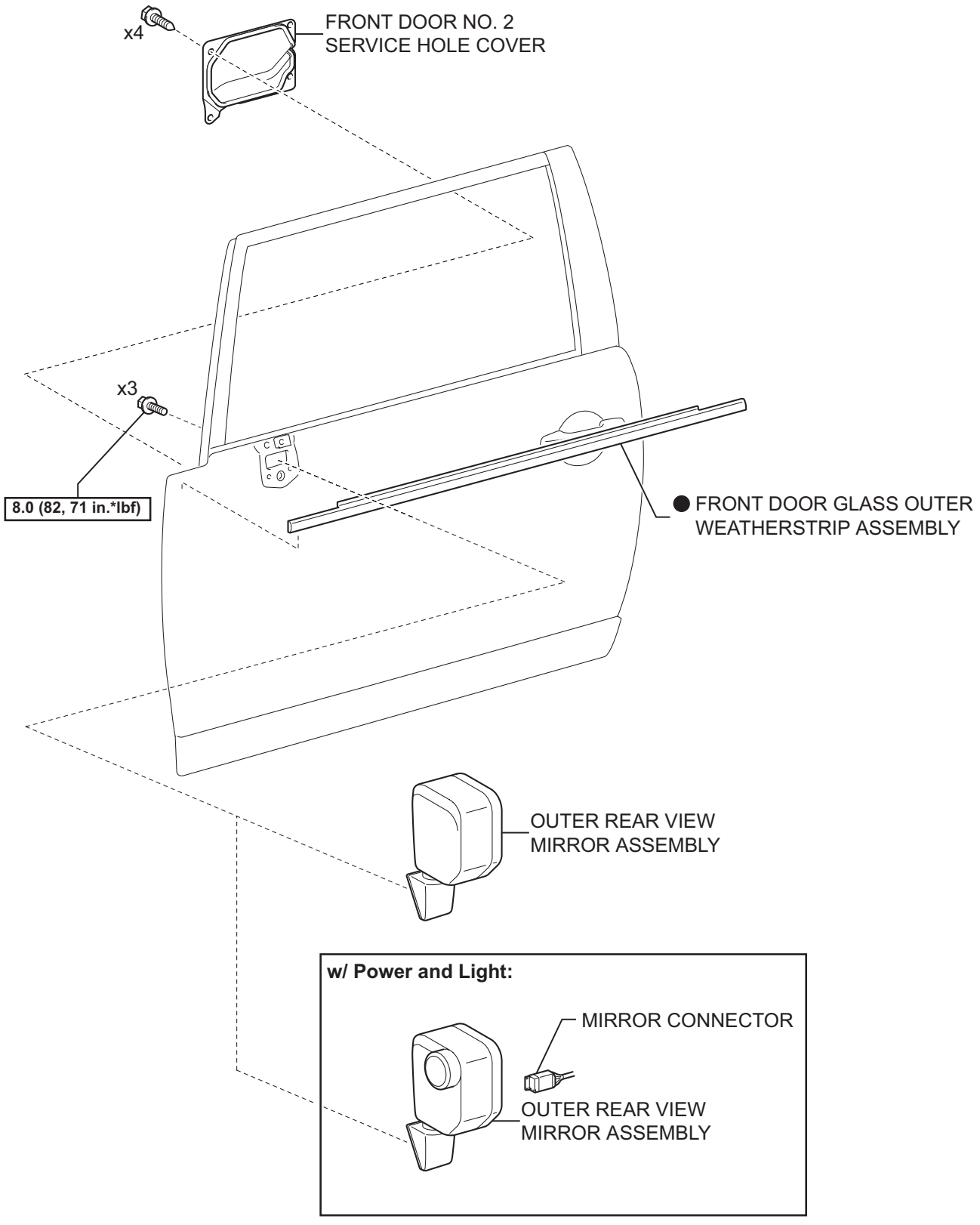

ET

N*m (kgf*cm, ft*lbf) : Specified torque

● Non-reusable part

Y

B135098E01

REMOVAL

HINT:
The procedure described below is for the LH side. Use the same procedure for both the RH and LH sides, unless otherwise specified.

1. **DISCONNECT CABLE FROM NEGATIVE BATTERY TERMINAL**

2. **REMOVE FRONT DOOR ARMREST BASE UPPER PANEL**
   HINT:
   Use the same procedure as for the RH side (See page ED-9).

3. **REMOVE FRONT DOOR TRIM BOARD SUB-ASSEMBLY**
   HINT:
   Use the same procedure as for the RH side (See page ED-9).

4. **REMOVE FRONT DOOR NO. 2 SERVICE HOLE COVER**
   HINT:
   Use the same procedure as for the RH side (See page ED-10).

5. **REMOVE OUTER REAR VIEW MIRROR ASSEMBLY**
   (a) for Driver Side:
      (1) Provisionally install the power window regulator master switch.
   (b) for Front Passenger Side:
      (1) Provisionally install the power window regulator switch.
   (c) Close the door glass.
   (d) Disconnect the connector.
   (e) Remove the 3 bolts and the outer rear view mirror.
   NOTICE:
   Do not drop or damage the outer rear view mirror when removing the bolts.

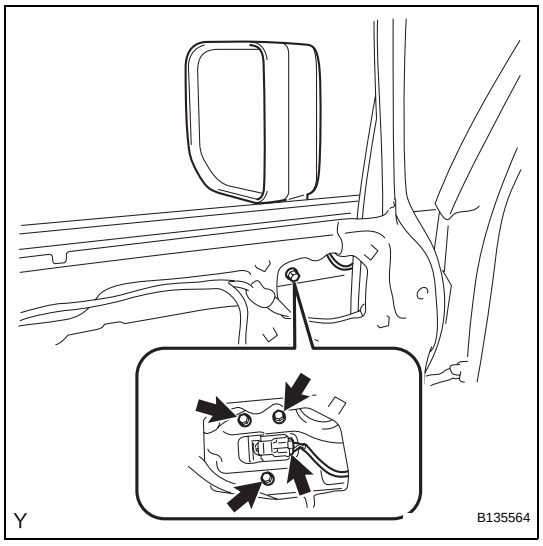

6. **REMOVE FRONT DOOR GLASS OUTER WEATHERSTRIP ASSEMBLY**
   (a) Apply protective tape to the front door panel in the area around the front door glass outer weatherstrip.

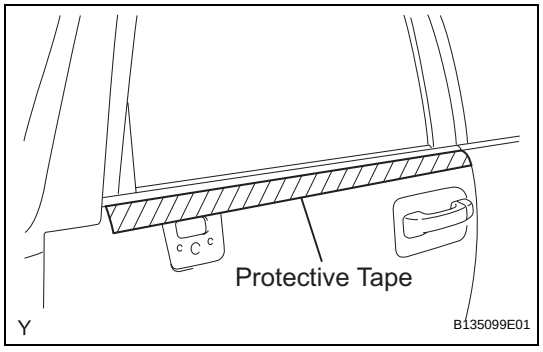

ET

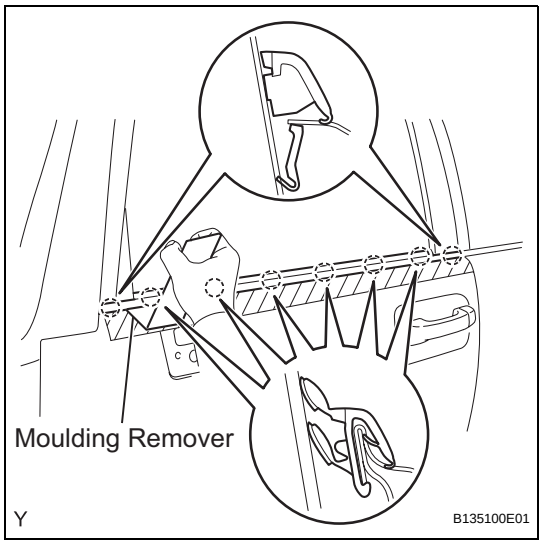

(b) Using a moulding remover, disengage the 8 claws and remove the front door glass outer weatherstrip.

INSTALLATION

HINT:
The procedure described below is for the LH side. Use the same procedure for both the RH and LH sides, unless otherwise specified.

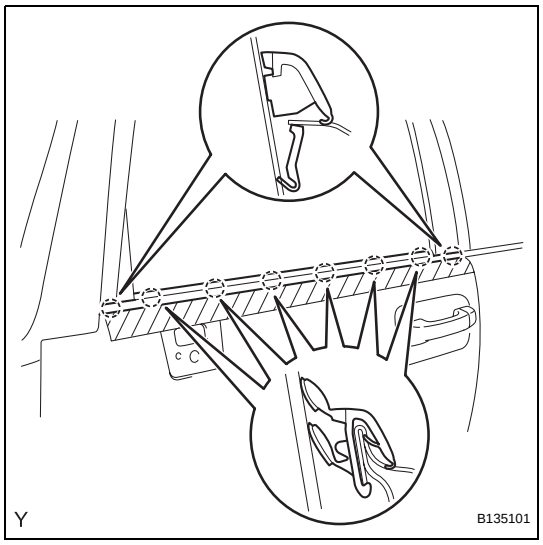

1. INSTALL FRONT DOOR GLASS OUTER WEATHERSTRIP ASSEMBLY

(a) Engage the 8 claws and install a new front door glass outer weatherstrip.

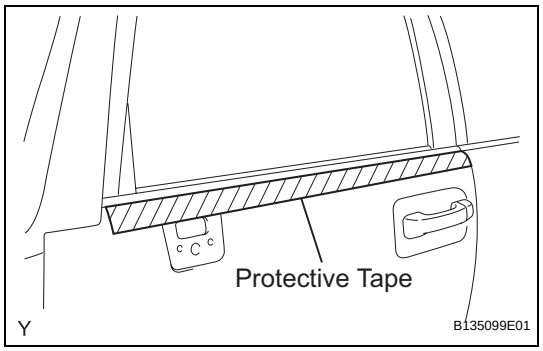

(b) Remove the protective tape.

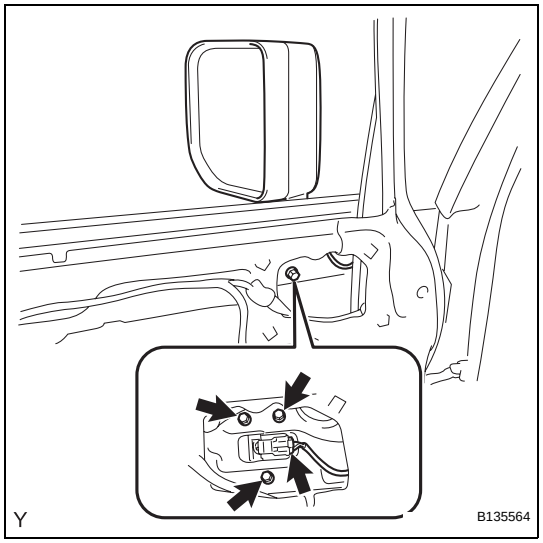

2. INSTALL OUTER REAR VIEW MIRROR ASSEMBLY

(a) Install the outer rear view mirror with the 3 bolts.
Torque: 8.0 N*m (82 kgf*cm, 71 in.*lbf)

(b) Connect the connector.

3. INSTALL FRONT DOOR NO. 2 SERVICE HOLE COVER

HINT:
Use the same procedure as for the RH side (See pageED-24).

4. INSTALL FRONT DOOR TRIM BOARD SUB-ASSEMBLY

HINT:
Use the same procedure as for the RH side (See page ED-24).

5. INSTALL FRONT DOOR ARMREST BASE UPPER PANEL

HINT:
Use the same procedure as for the RH side (See page ED-25).

6. CONNECT CABLE TO NEGATIVE BATTERY TERMINAL
Torque: 3.9 N*m (40 kgf*cm, 35 in.*lbf)

ACCESS DOOR GLASS WEATHERSTRIP

COMPONENTS

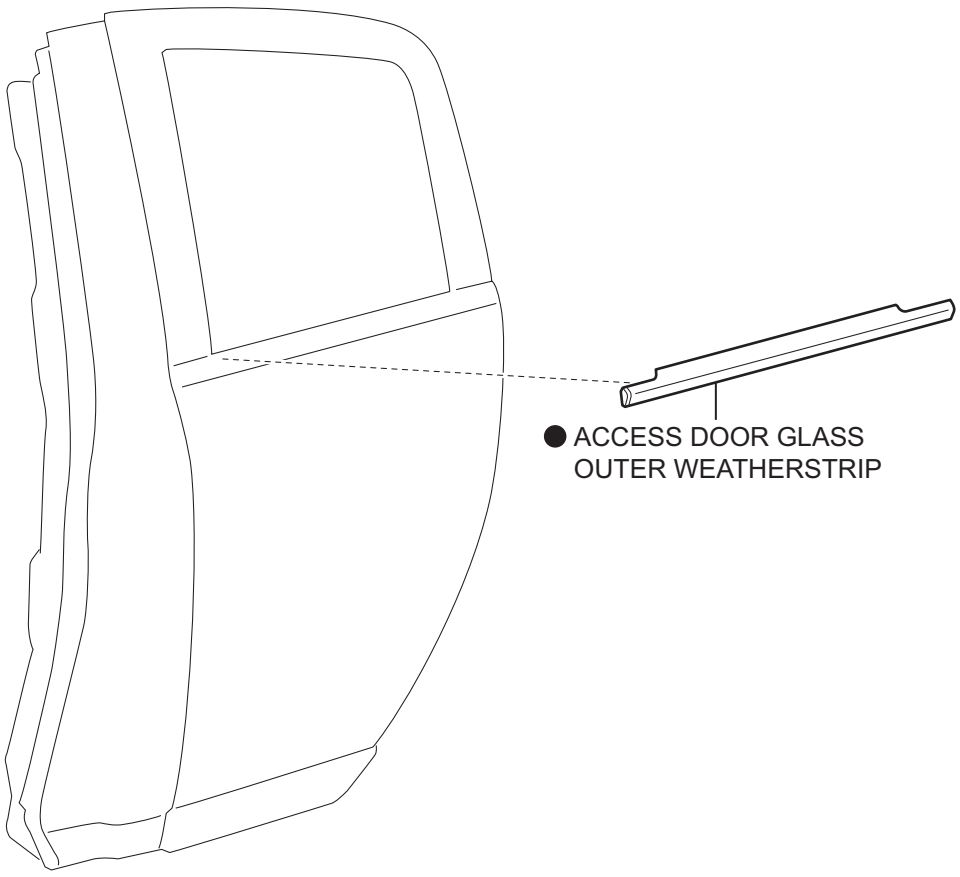

● Non-reusable part

Y

B135102E01

REMOVAL

HINT:
The procedure described below is for the LH side. Use the same procedure for both the RH and LH sides, unless otherwise specified.

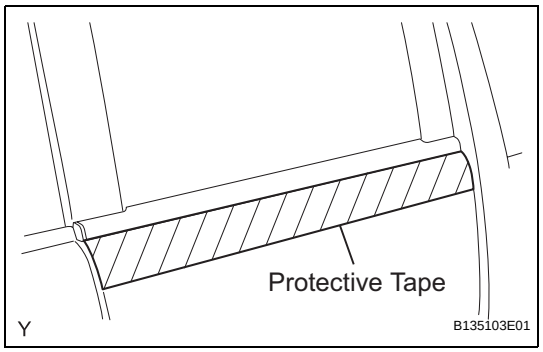

1. REMOVE ACCESS DOOR GLASS OUTER WEATHERSTRIP

(a) Apply protective tape to the rear door panel in the area around the access door glass outer weatherstrip.

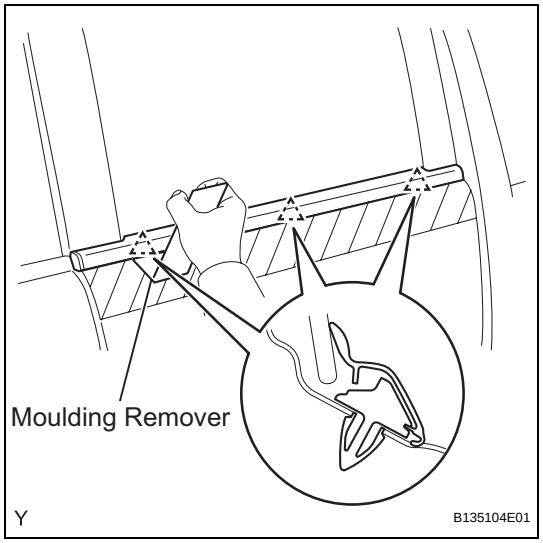

(b) Using a moulding remover, disengage the 3 clips and remove the access door glass outer weatherstrip.

INSTALLATION

HINT:
The procedure described below is for the LH side. Use the same procedure for both the RH and LH sides, unless otherwise specified.

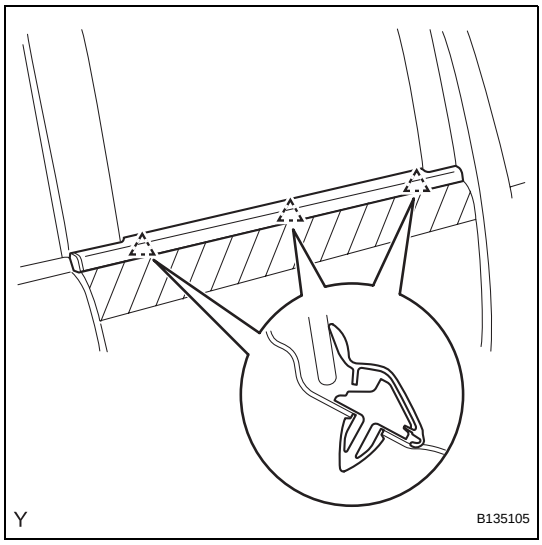

1. INSTALL ACCESS DOOR GLASS OUTER WEATHERSTRIP

(a) Engage the 3 clips and install a new access door glass outer weatherstrip.

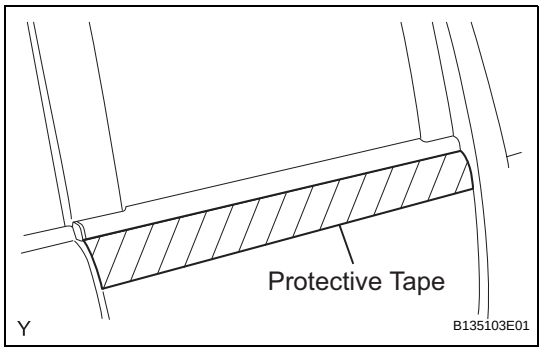

(b) Remove the protective tape.

ROOF DRIP SIDE FINISH MOULDING

COMPONENTS

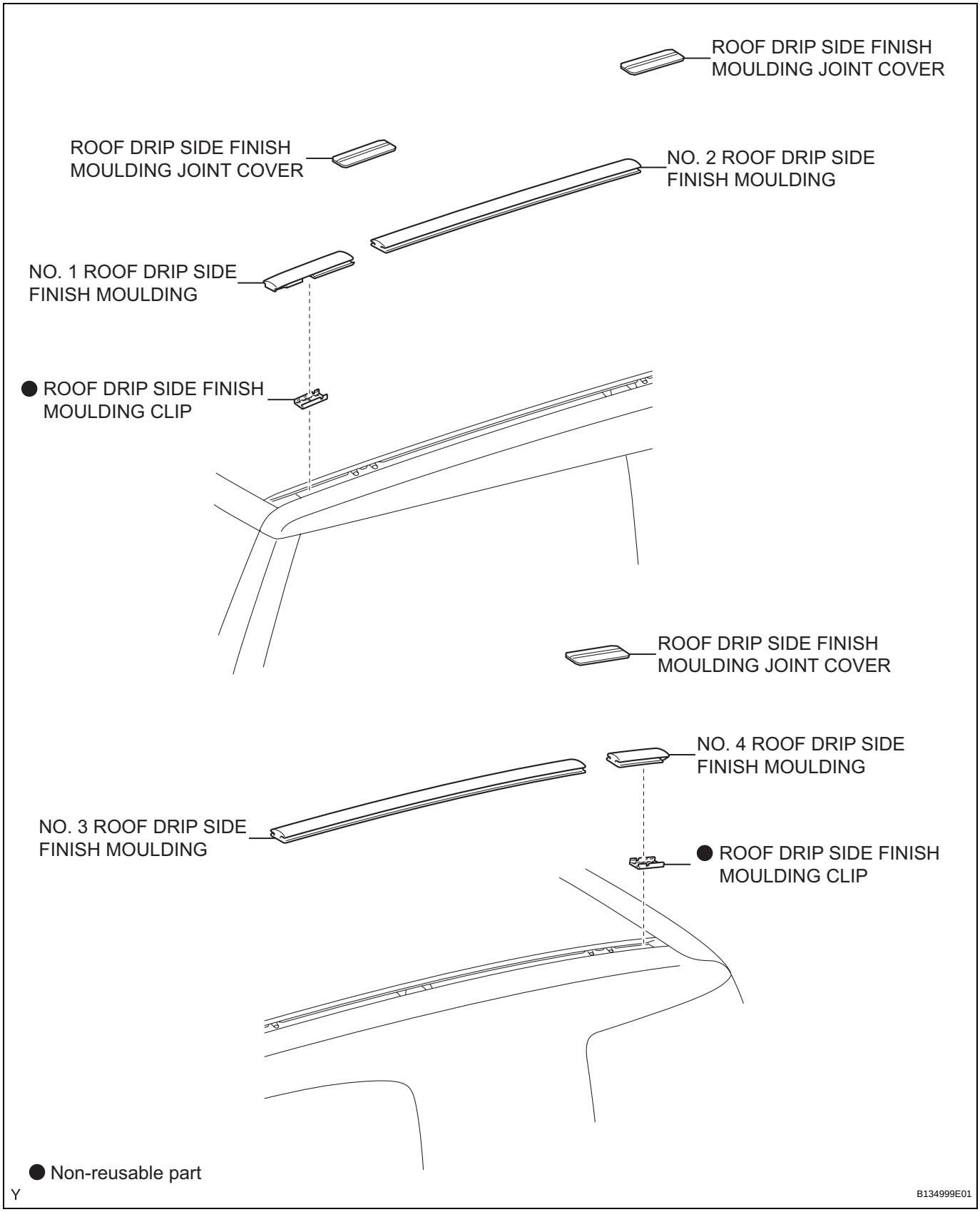

ET

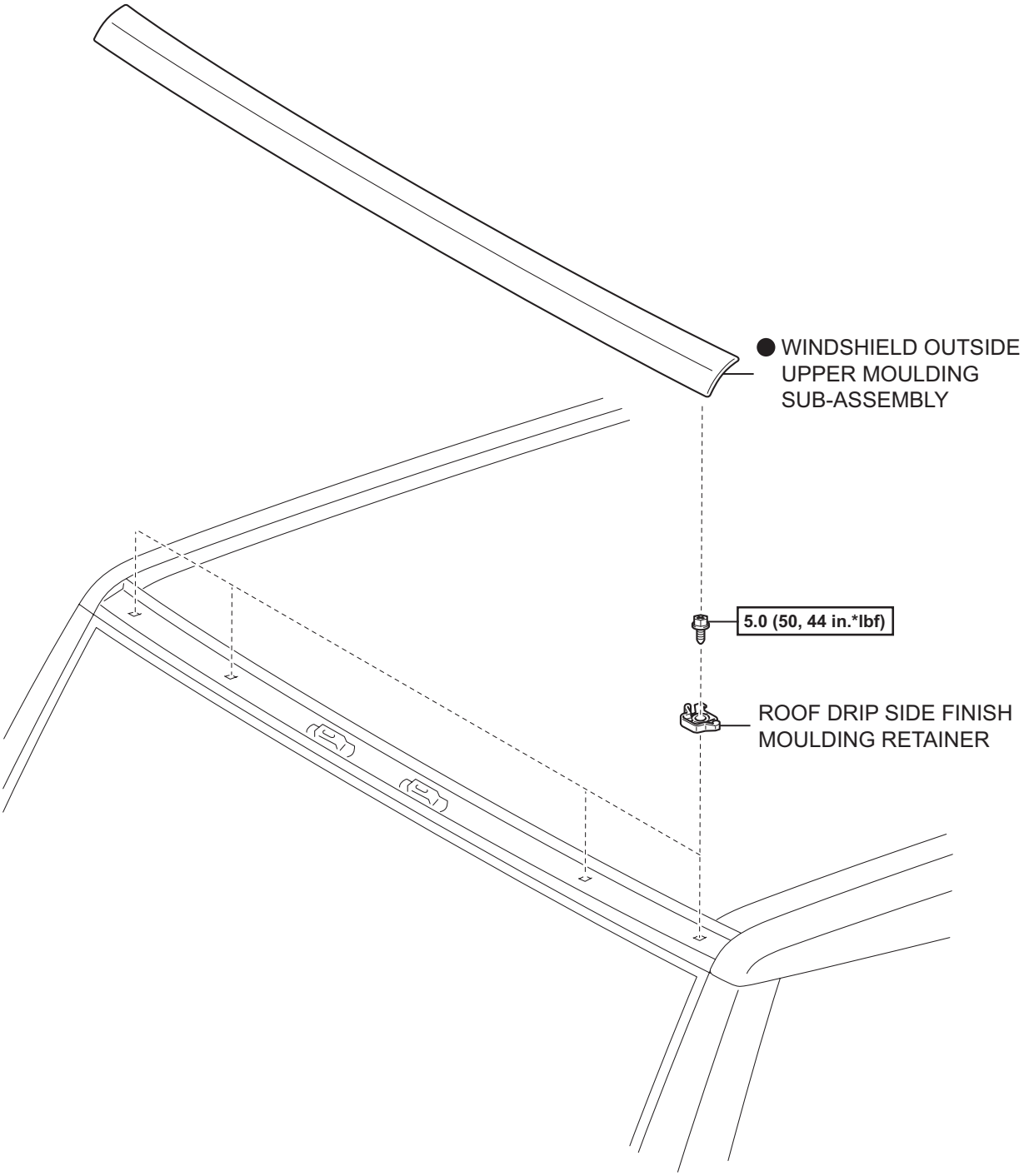

N*m (kgf*cm, ft*lbf) : Specified torque

● Non-reusable part

Y

B135037E01

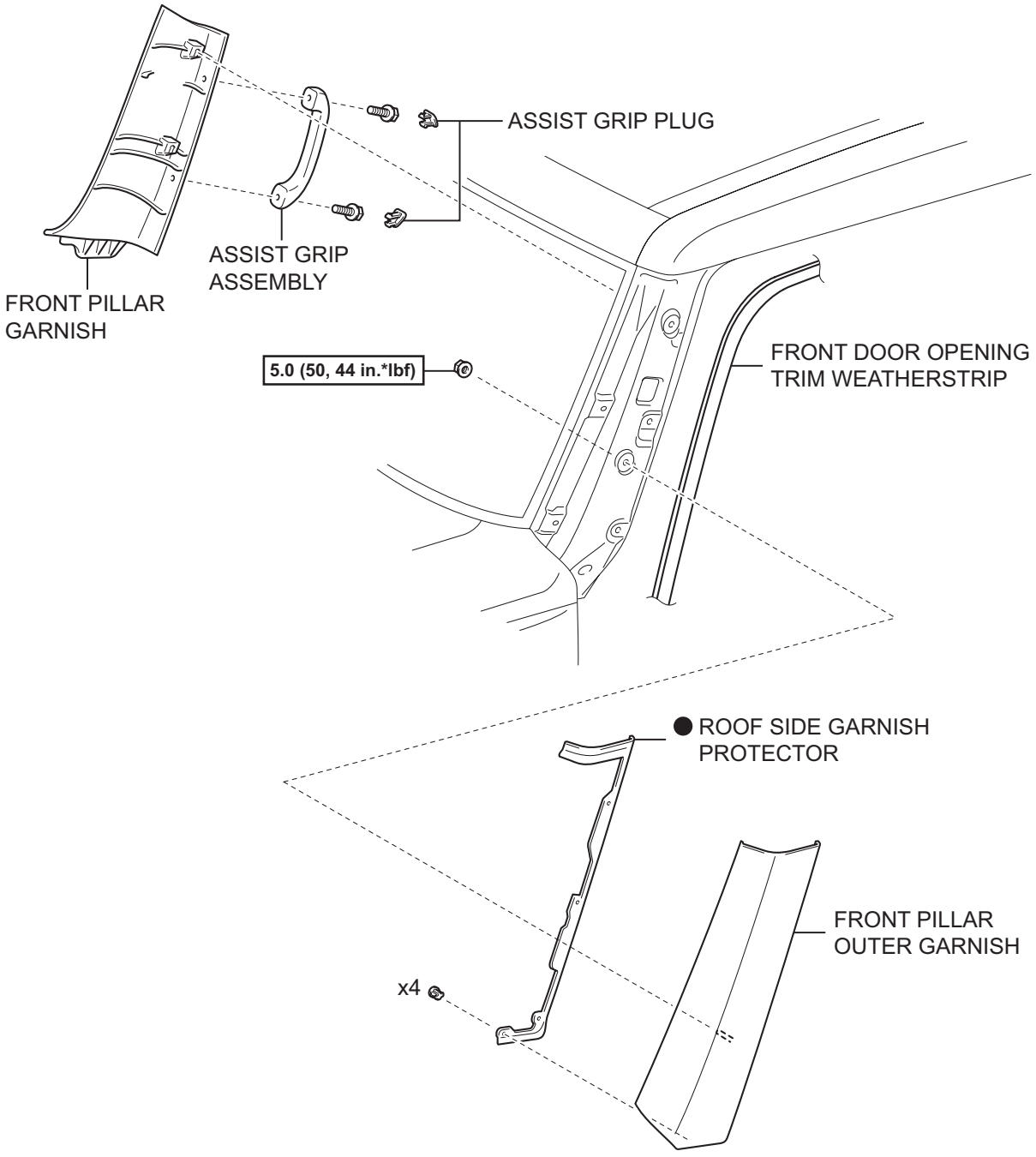

N*m (kgf*cm, ft*lbf) : Specified torque

● Non-reusable part

Y

B135012E01

ET

REMOVAL

HINT:
The procedure described below is for the LH side. Use the same procedure for both the RH and LH sides, unless otherwise specified.

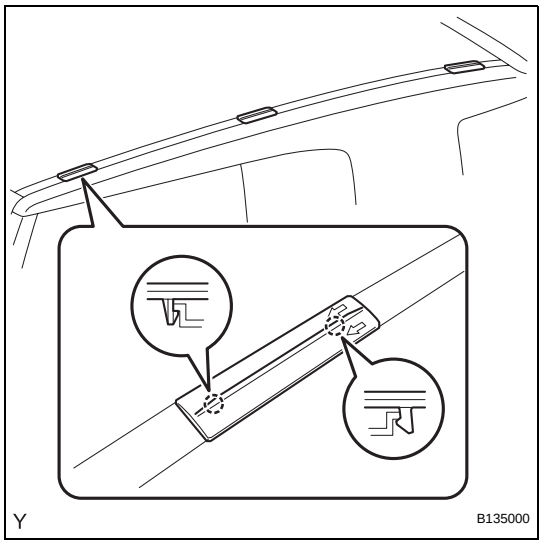

1. REMOVE ROOF DRIP SIDE FINISH MOULDING JOINT COVER

HINT:
Use the same procedure to remove all the roof drip moulding joint covers.

(a) Disengage the 2 claws and remove the roof drip moulding joint cover.

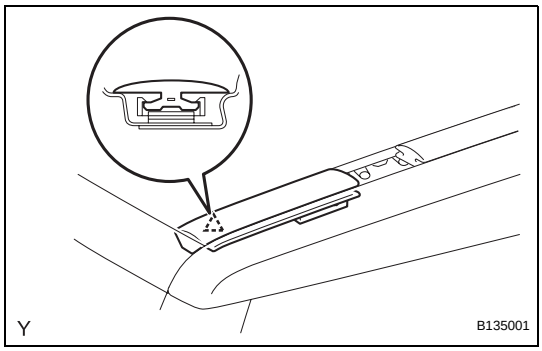

2. REMOVE NO. 1 ROOF DRIP SIDE FINISH MOULDING

(a) Disengage the clip and remove the No. 1 roof drip side finish moulding.

NOTICE:

- **Do not remove the clip.**
- **Replace the clip with a supply clip if damaged.**

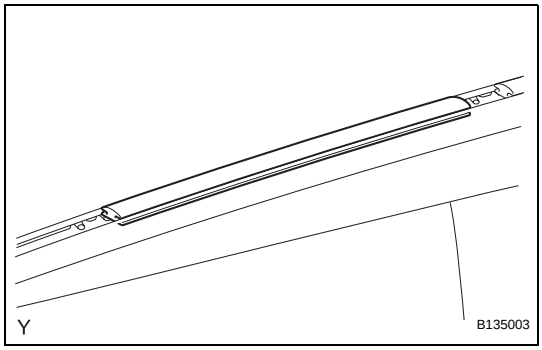

3. REMOVE NO. 2 ROOF DRIP SIDE FINISH MOULDING

(a) Remove the No. 2 roof drip side finish moulding.

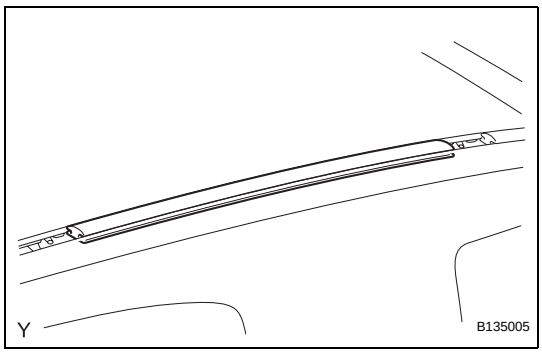

4. REMOVE NO. 3 ROOF DRIP SIDE FINISH MOULDING

(a) Remove the No. 3 roof drip side finish moulding.

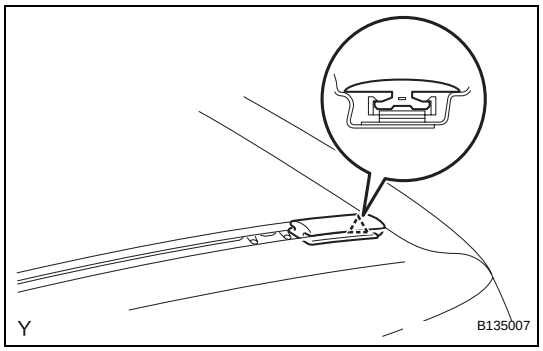

5. REMOVE NO. 4 ROOF DRIP SIDE FINISH MOULDING

(a) Disengage the clip and remove the No. 4 roof drip side finish moulding.

NOTICE:

- **Do not remove the clip.**
- **Replace the clip with a supply clip if damaged.**

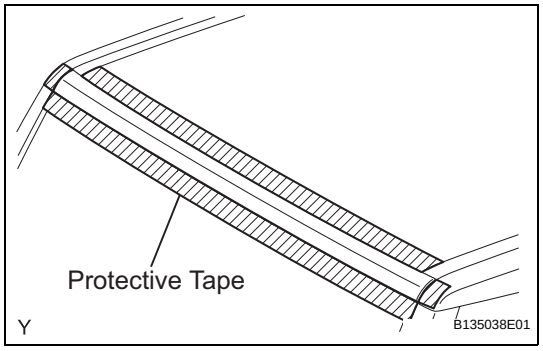

6. REMOVE WINDSHIELD OUTSIDE UPPER MOULDING SUB-ASSEMBLY

(a) Apply protective tape to the roof panel in the area around the windshield outside upper moulding.

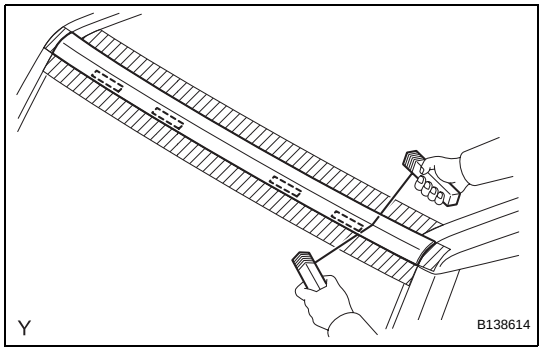

(b) Insert the piano wires between the vehicle body and the windshield outside upper moulding, as shown in the illustration.

(c) Tie objects that can serve as handles (for example, wooden blocks) to all wire ends.

NOTICE:

When separating the windshield outside upper moulding from the vehicle, do not damage the vehicle's paintwork or exterior ornaments.

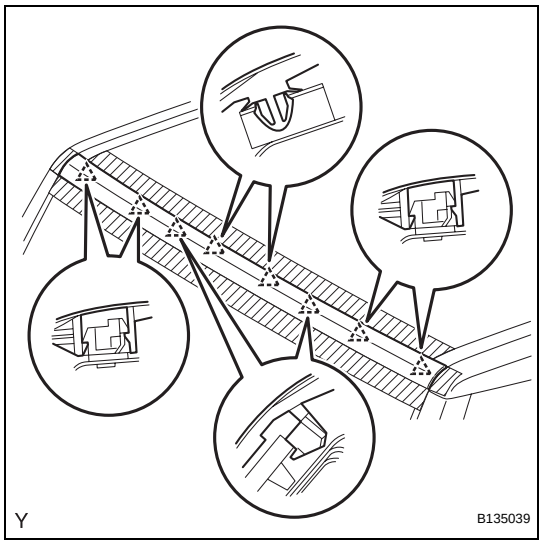

(d) Disengage the 6 claws and the 2 clips and remove the windshield outside upper moulding.

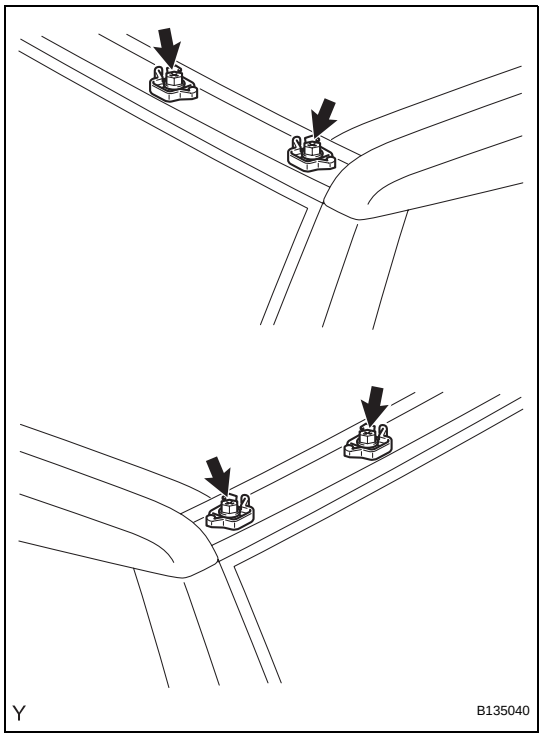

7. REMOVE ROOF DRIP SIDE FINISH MOULDING RETAINER

HINT:
Use the same procedure to remove all the roof drip side finish moulding retainers.

(a) Remove the screw and the roof drip side finish moulding retainer.

8. REMOVE FRONT DOOR OPENING TRIM WEATHERSTRIP

HINT:
Use the same procedure as for the RH side (See Page AV-110).

9. REMOVE ASSIST GRIP PLUG

HINT:
Use the same procedure as for the RH side (See Page AV-110).

10. REMOVE ASSIST GRIP ASSEMBLY

HINT:
Use the same procedure as for the RH side (See Page AV-110).

11. REMOVE FRONT PILLAR GARNISH

HINT:
Use the same procedure as for the RH side (See Page IR-18).

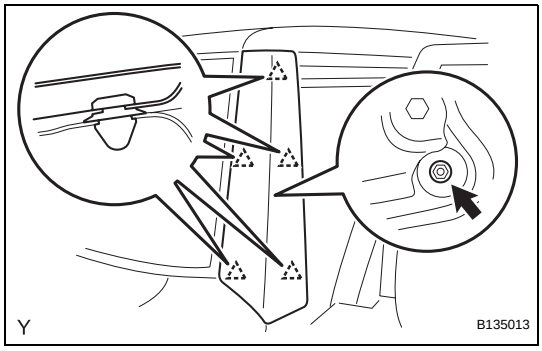

12. REMOVE FRONT PILLAR OUTER GARNISH

(a) Remove the nut.

(b) Disengage the 5 clips and remove the front pillar outer garnish.

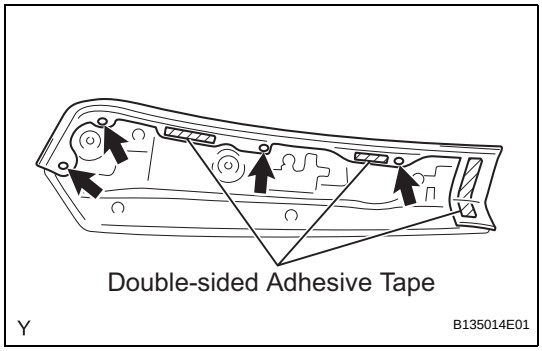

13. REMOVE ROOF SIDE GARNISH PROTECTOR

(a) Using a clip remover, remove the 4 clips.

(b) Remove the 3 pieces of double-sided adhesive tape and the roof side garnish protector.

INSTALLATION

HINT:
The procedure described below is for the LH side. Use the same procedure for both the RH and LH sides, unless otherwise specified.

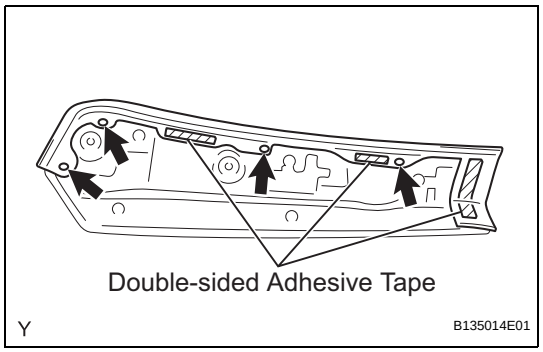

1. INSTALL ROOF SIDE GARNISH PROTECTOR

(a) Install a new roof side garnish protector with the 4 clips.

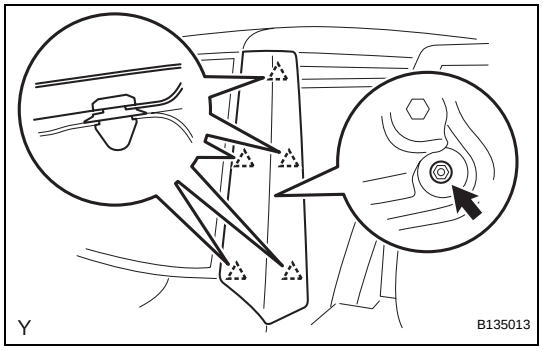

2. INSTALL FRONT PILLAR OUTER GARNISH

(a) Engage the 5 clips and install the front pillar outer garnish.

(b) Tighten the nut.
Torque: 5.0 N*m (50 kgf*cm, 44 in.*lbf)

3. INSTALL FRONT PILLAR GARNISH

HINT:
Use the same procedure as for the RH side (See Page IR-43).

4. INSTALL ASSIST GRIP ASSEMBLY

HINT:
Use the same procedure as for the RH side (See Page AV-113).

5. INSTALL ASSIST GRIP PLUG

HINT:
Use the same procedure as for the RH side (See Page AV-114).

6. INSTALL FRONT DOOR OPENING TRIM WEATHERSTRIP

HINT:
Use the same procedure as for the RH side (See Page AV-114).

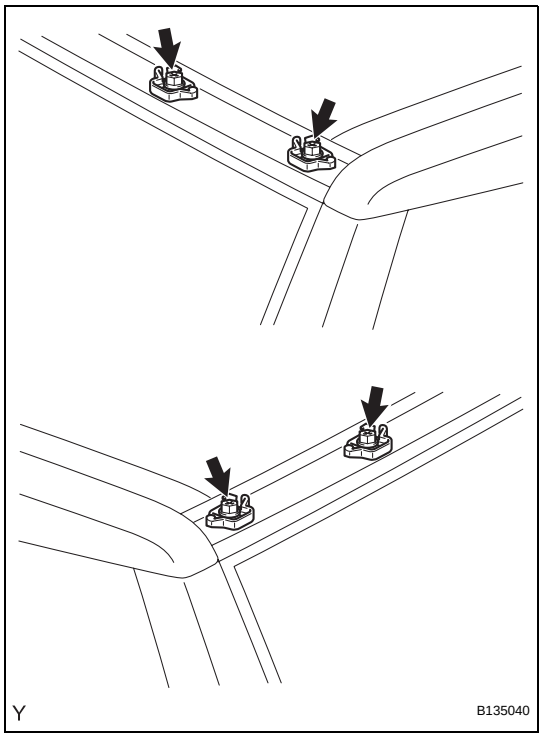

7. INSTALL ROOF DRIP SIDE FINISH MOULDING RETAINER

HINT:

Use the same procedure to install all the roof drip side finish moulding retainers.

(a) Install the roof drip side finish moulding retainer.
Torque: 5.0 N*m (50 kgf*cm, 44 in.*lbf)

8. INSTALL WINDSHIELD OUTSIDE UPPER MOULDING SUB-ASSEMBLY

(a) Clean the windshield glass.
(1) Using a scraper, remove the adhesive from the windshield glass.
(2) Clean the outer circumference of the windshield glass with a non-residue solvent.
NOTICE:
Do not touch the windshield glass surface after cleaning it.

(b) Using a brush or sponge, apply Primer G to the contact surface.
NOTICE:
- **Allow the primer to dry for 3 minutes or more.**
- **Throw away any leftover Primer G.**
- **Do not apply too much Primer G.**

HINT:

If Primer G is applied to any areas other than those specified, wipe off the primer with a clean shop rag or piece of cloth before it dries.

(c) Apply adhesive.
Adhesive:
Toyota Genuine Windshield Glass Adhesive or the equivalent
(1) Cut the tip off the cartridge nozzle.
HINT:
After cutting off the tip, use all adhesive within the times indicated in the table below.
Usage time frame:

Temperature	Usage Time Frame
35°C (95°F)	15 minutes
20°C (68°F)	1 hour 40 minutes
5°C (41°F)	8 hours

(2) Load the sealer gun with the cartridge.

(3) Apply adhesive to a new windshield outside upper moulding, as shown in the illustration.

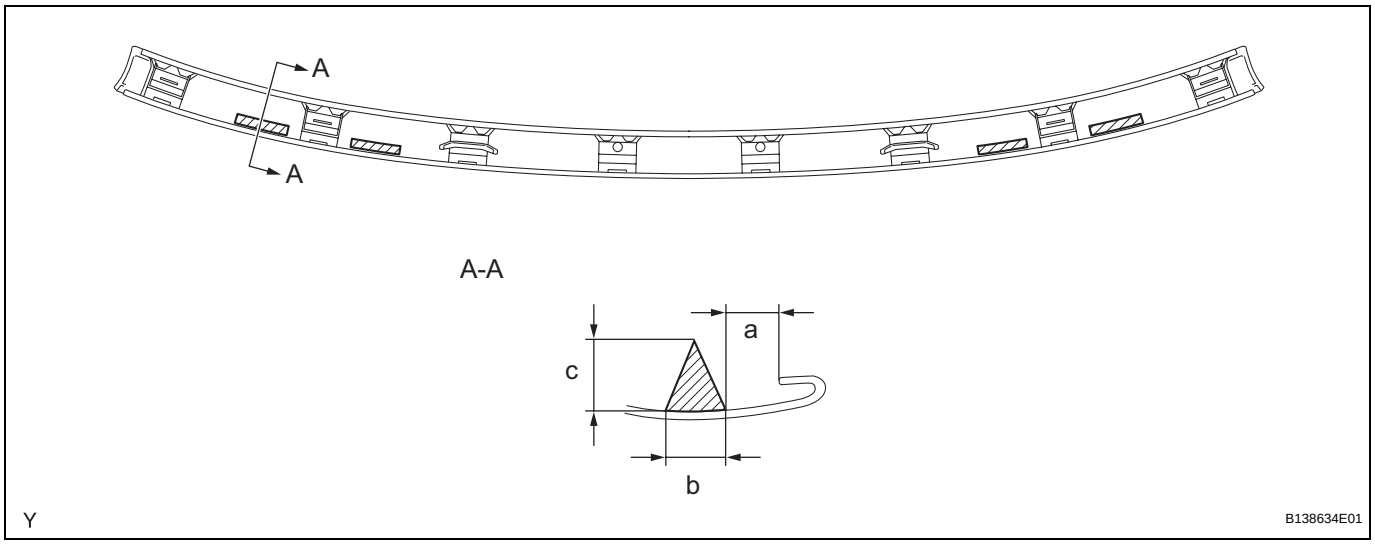

Specification:

Area	Measurement
a	7 mm (0.276 in.)
b	8 mm (0.315 in.)
c	10 mm (0.394 in.)

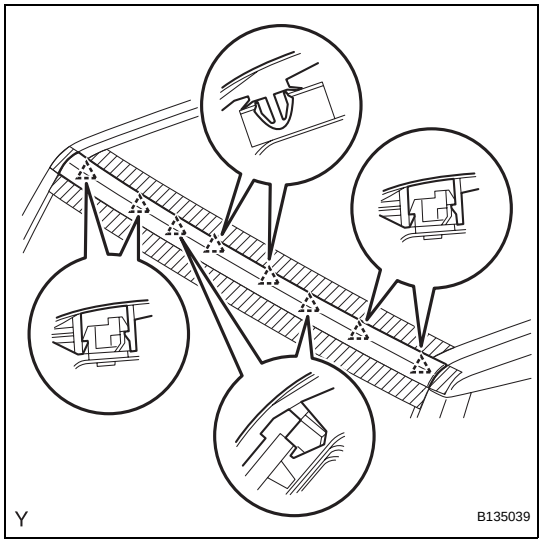

(d) Engage the 6 claws and the 2 clips and install a new windshield outside upper moulding.
NOTICE:
Do not drive the vehicle within the time indicated in the table below.
Minimum time:

Temperature	Minimum time prior to driving vehicle
35°C (95°F)	1 hour 30 minutes
20°C (68°F)	5 hour
5°C (41°F)	24 hours

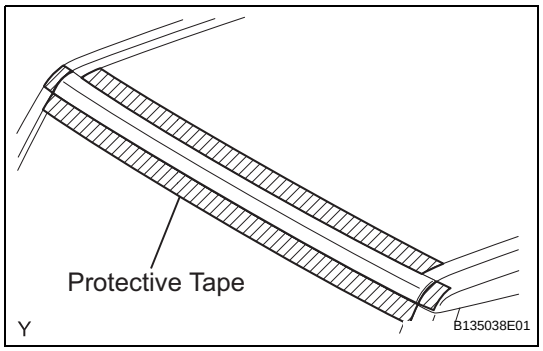

(e) Remove the protective tape.

ET

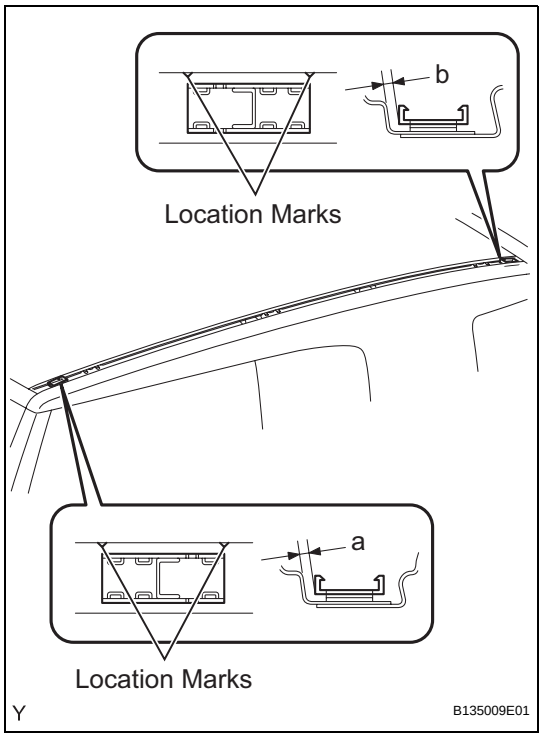

9. INSTALL ROOF DRIP SIDE FINISH MOULDING CLIP

NOTICE:

- **Only follow this procedure when replacing the clips.**
- **Wear polyethylene gloves when performing steps and avoid having direct contact between the adhesive and your hand.**
- **Refer to the label on the adhesive for further precautions.**

(a) Clean the vehicle body.

(1) Using an industrial dryer, heat the tape remaining on the painted surface to soften it and peel it off with a bamboo scraper.

(2) Clean the surface using a shop rag or piece of cloth soaked in a non-residue solvent.

(b) Apply adhesive.

(1) Load an adhesive cartridge into an adhesive coating gun.

(2) Remove the cap from the adhesive cartridge and pull the lever of the gun. Make sure that the adhesive comes out of the nozzle tip (2 outlets) uniformly. (Confirm by applying adhesive to cardboard)

(3) Pull the lever again and apply adhesive to a part of the cardboard where it has not been applied before.

HINT:

The amount of the adhesive applied in this step should be greater than that required 0.5mm (0.02 in.)

(4) Using a paddle, mix the adhesive 10 times.

(5) Apply the adhesive, with a uniform thickness of 0.5 mm (0.02 in.), to the surface of the hardening tape on the clip.

(c) Set the clip in the predetermined position on the pillar and press in until extra adhesive protrudes beyond the sides of the tape (20 N (2kgf, 4.4 lb) x 2 seconds).

Specification:

Area	Measurement
a	2.5 to 3.5 mm (0.098 to 0.138 in.)
b	2 to 3 mm (0.079 to 0.118 in.)

(d) After pressing the clip, leave it for the predetermined time shown below and then install the moulding.

Ambient temperatures and recommended leaving times:

Temperature	Leaving times
5 to 10°C (41 to 50°F)	1 hour or more
10 to 15°C (50 to 59°F)	30 minutes or more
15 to 23°C (59 to 73°F)	30 minutes or more
23°C (73°F) or more	15 minutes or more

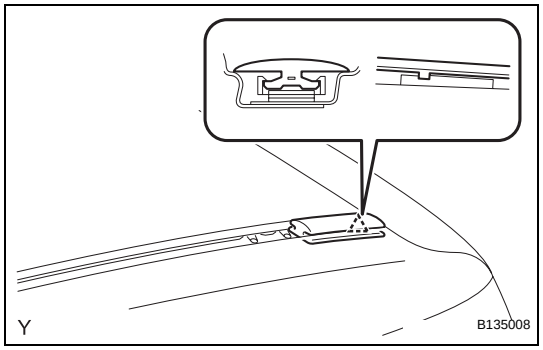

10. INSTALL NO. 4 ROOF DRIP SIDE FINISH MOULDING

(a) Engage the clip and install the No. 4 roof drip side finish moulding.

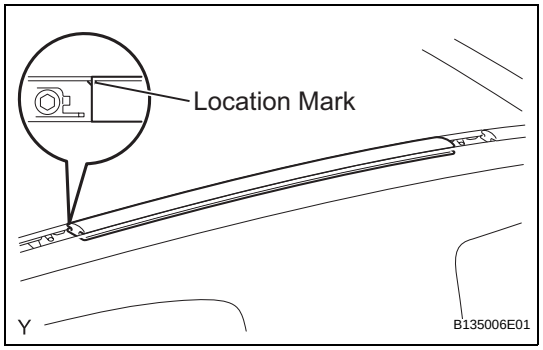

11. INSTALL NO. 3 ROOF DRIP SIDE FINISH MOULDING

(a) Install the No. 3 roof drip side finish moulding as shown in the illustration.

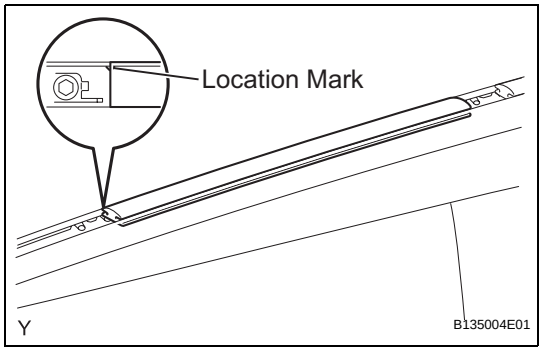

12. INSTALL NO. 2 ROOF DRIP SIDE FINISH MOULDING

(a) Install the No. 2 roof drip side finish moulding as shown in the illustration.

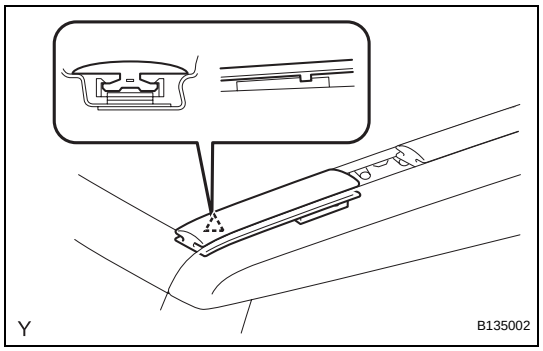

13. INSTALL NO. 1 ROOF DRIP SIDE FINISH MOULDING

(a) Engage the clip and install the No. 1 roof drip side finish moulding.

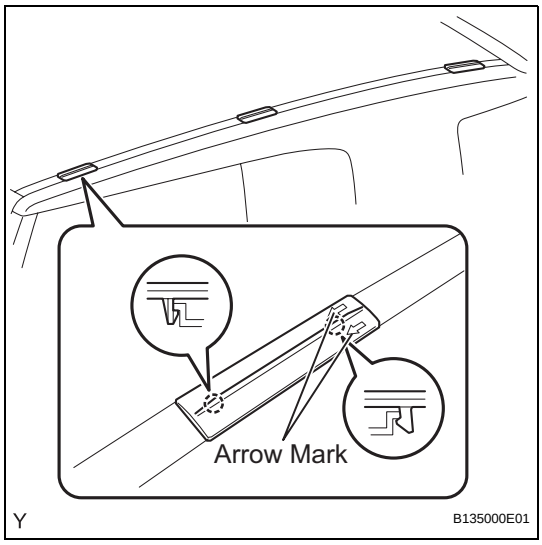

14. INSTALL ROOF DRIP SIDE FINISH MOULDING JOINT COVER

HINT:

Use the same procedure to remove all the roof drip moulding joint covers.

(a) Engage the 2 claws and install the roof drip moulding joint cover.

NOTICE:

Install the roof drip moulding joint cover with the arrow mark facing forward.

OUTSIDE MOULDING

COMPONENTS

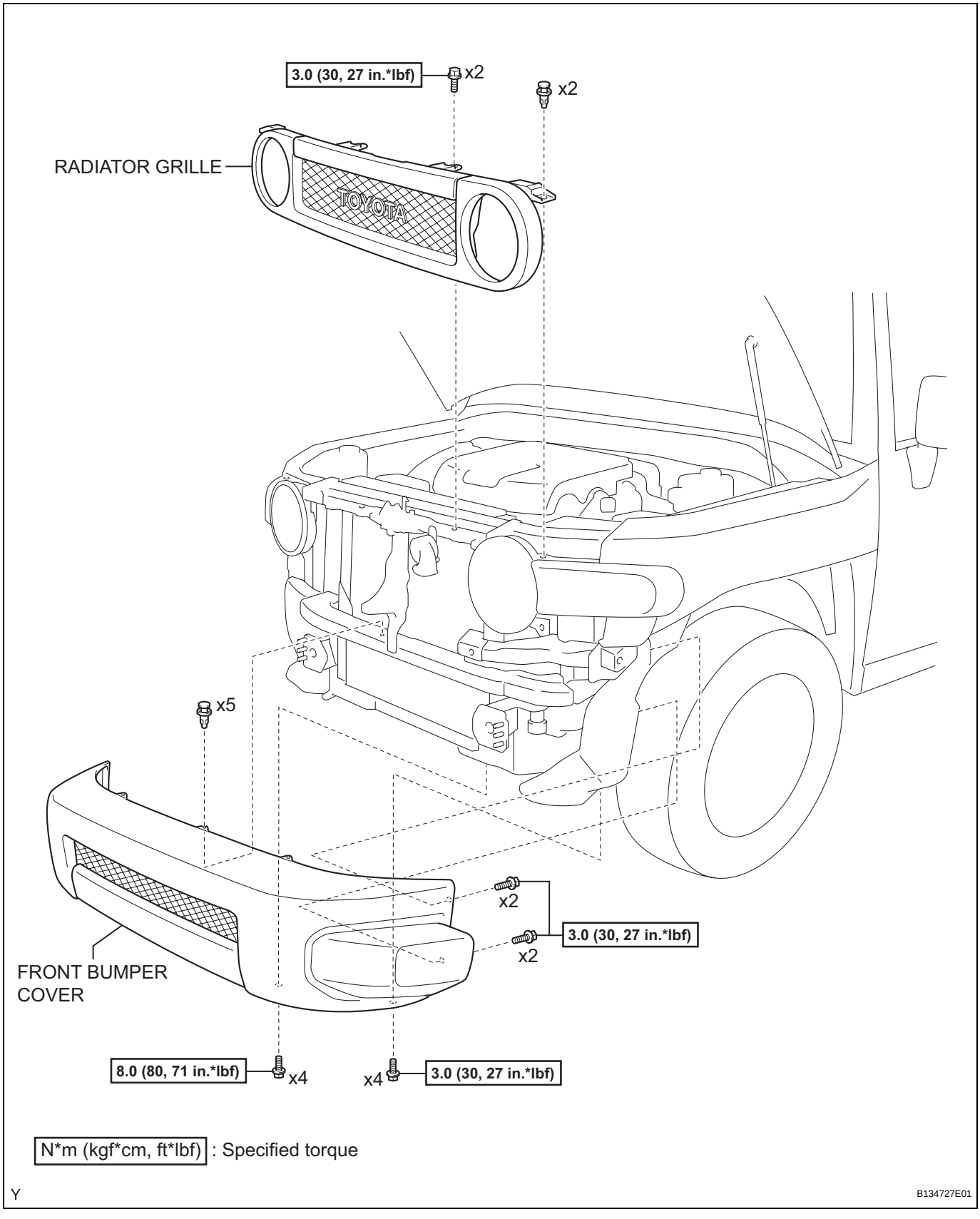

ET

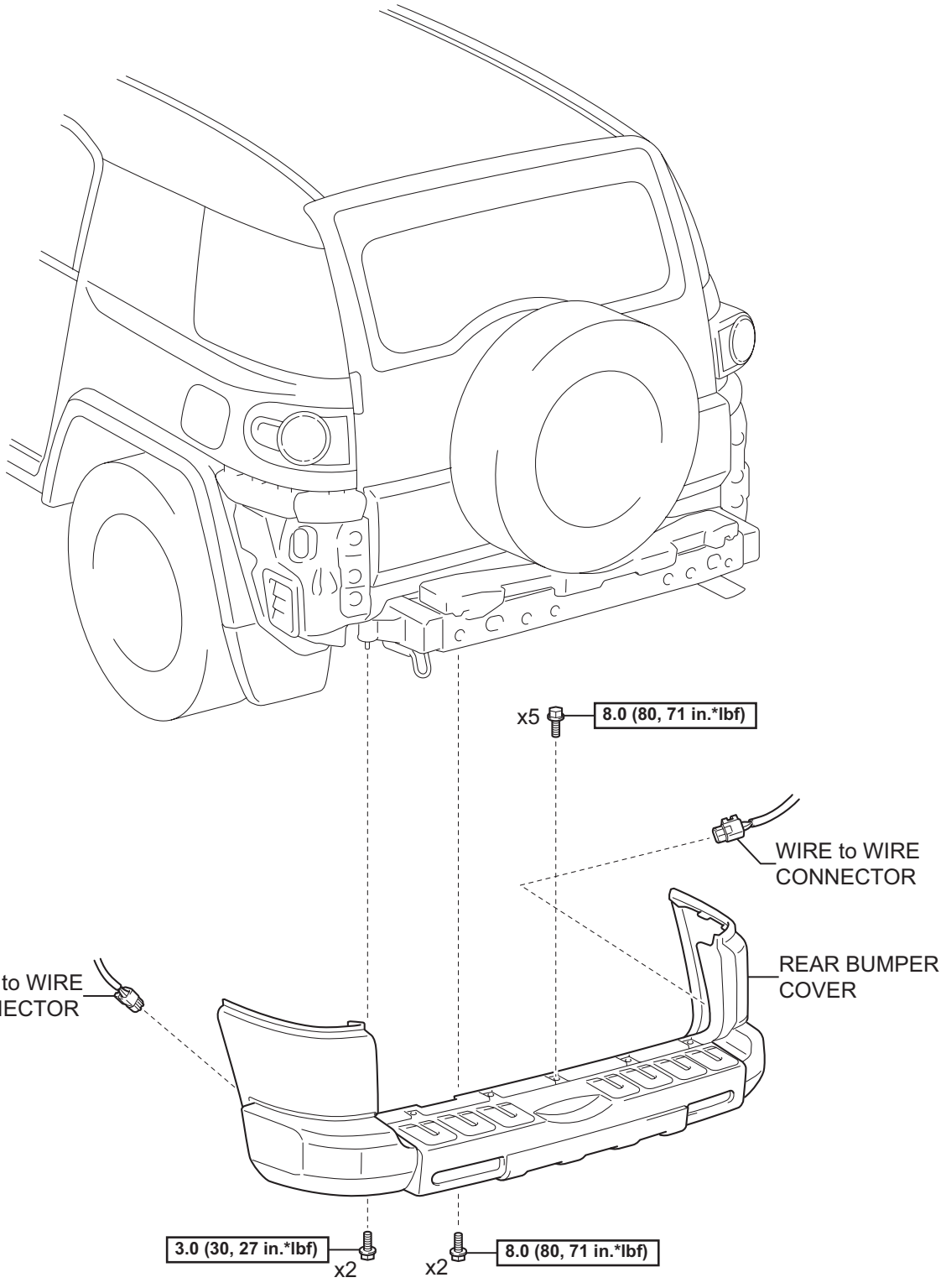

N*m (kgf*cm, ft*lbf) : Specified torque

Y

B138481E01

ET

w/ Side Step:

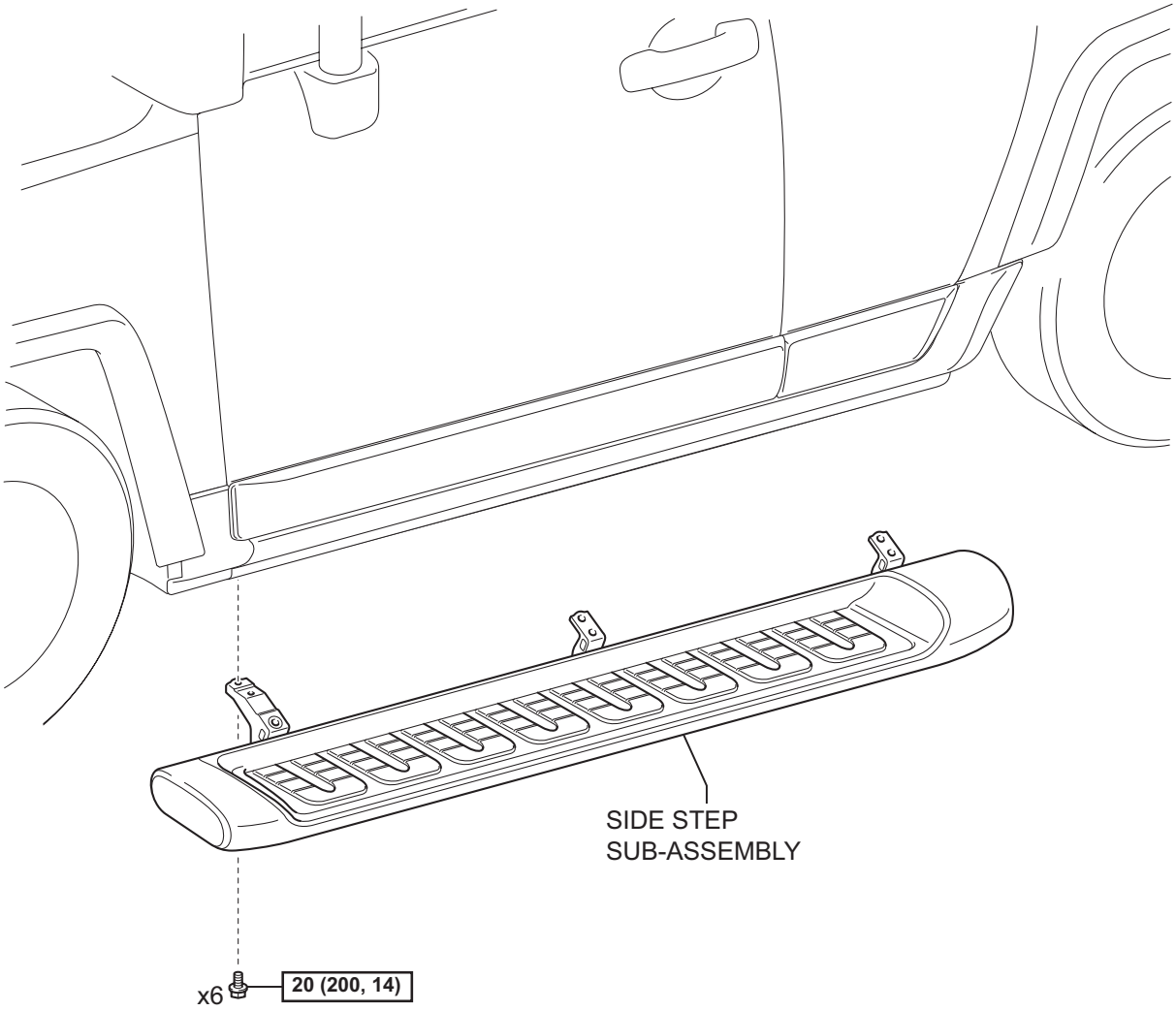

N*m (kgf*cm, ft*lbf) : Specified torque

Y

B138489E01

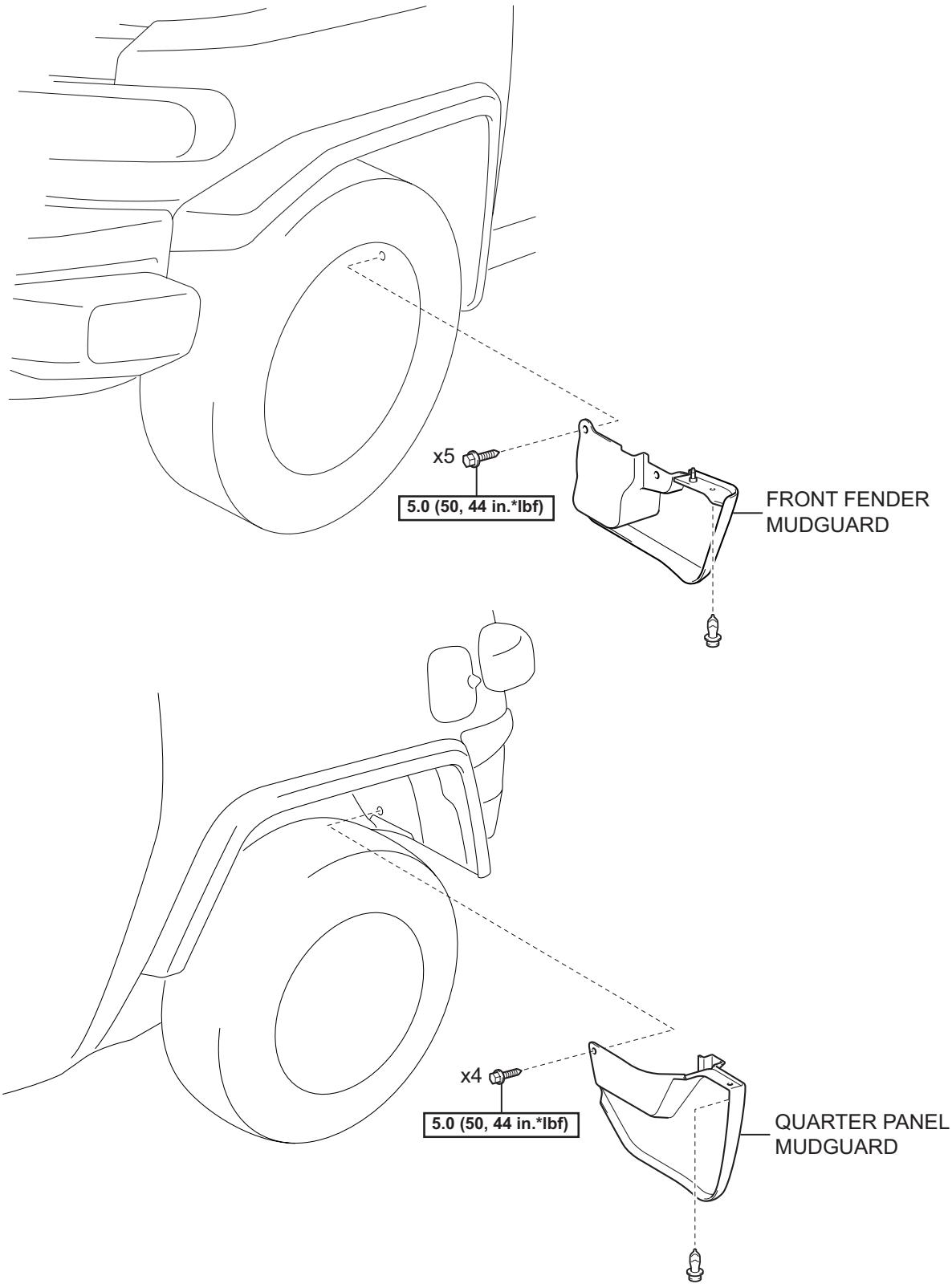

N*m (kgf*cm, ft*lbf) : Specified torque

Y

B135081E01

ET

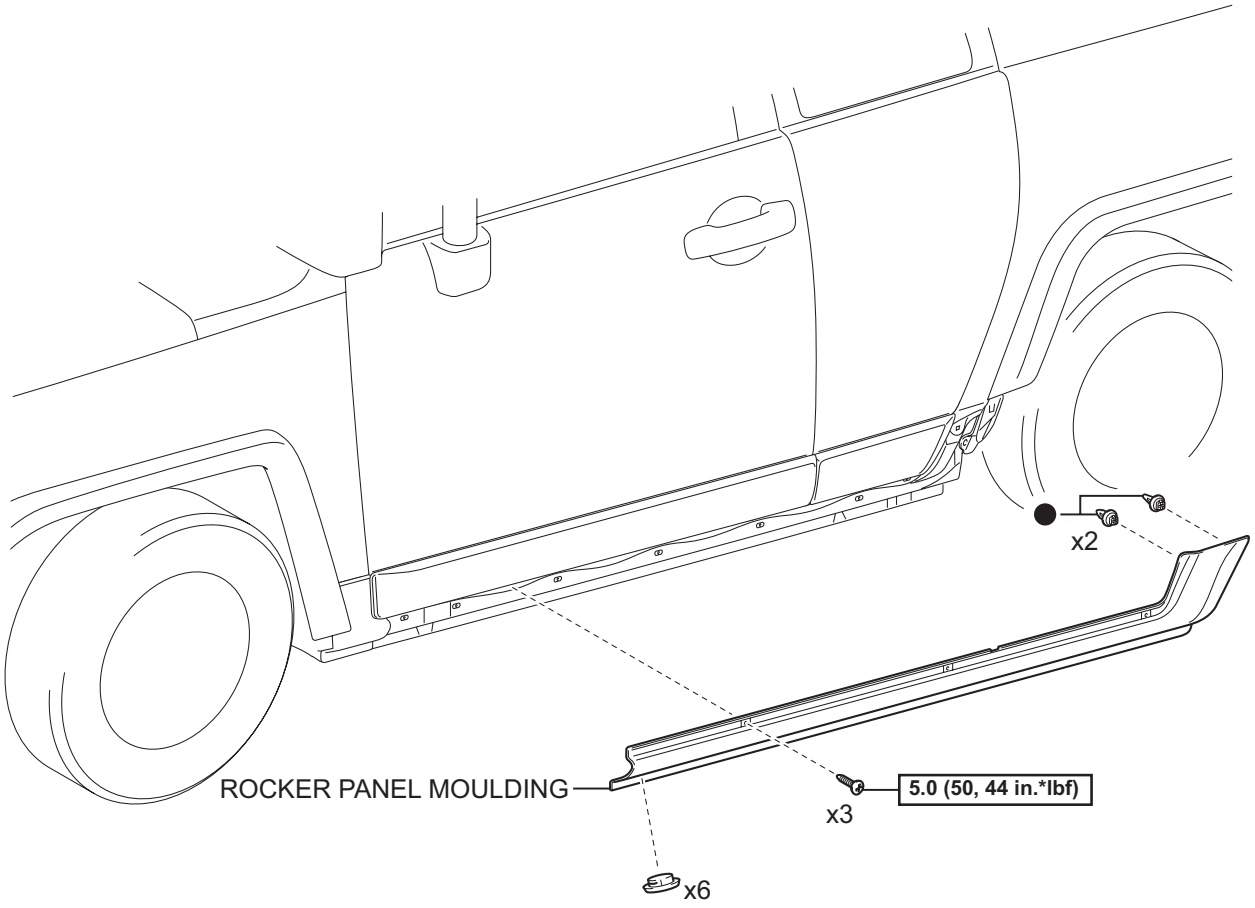

N*m (kgf*cm, ft*lbf) : Specified torque

● Non-reusable part

Y

B135050E01

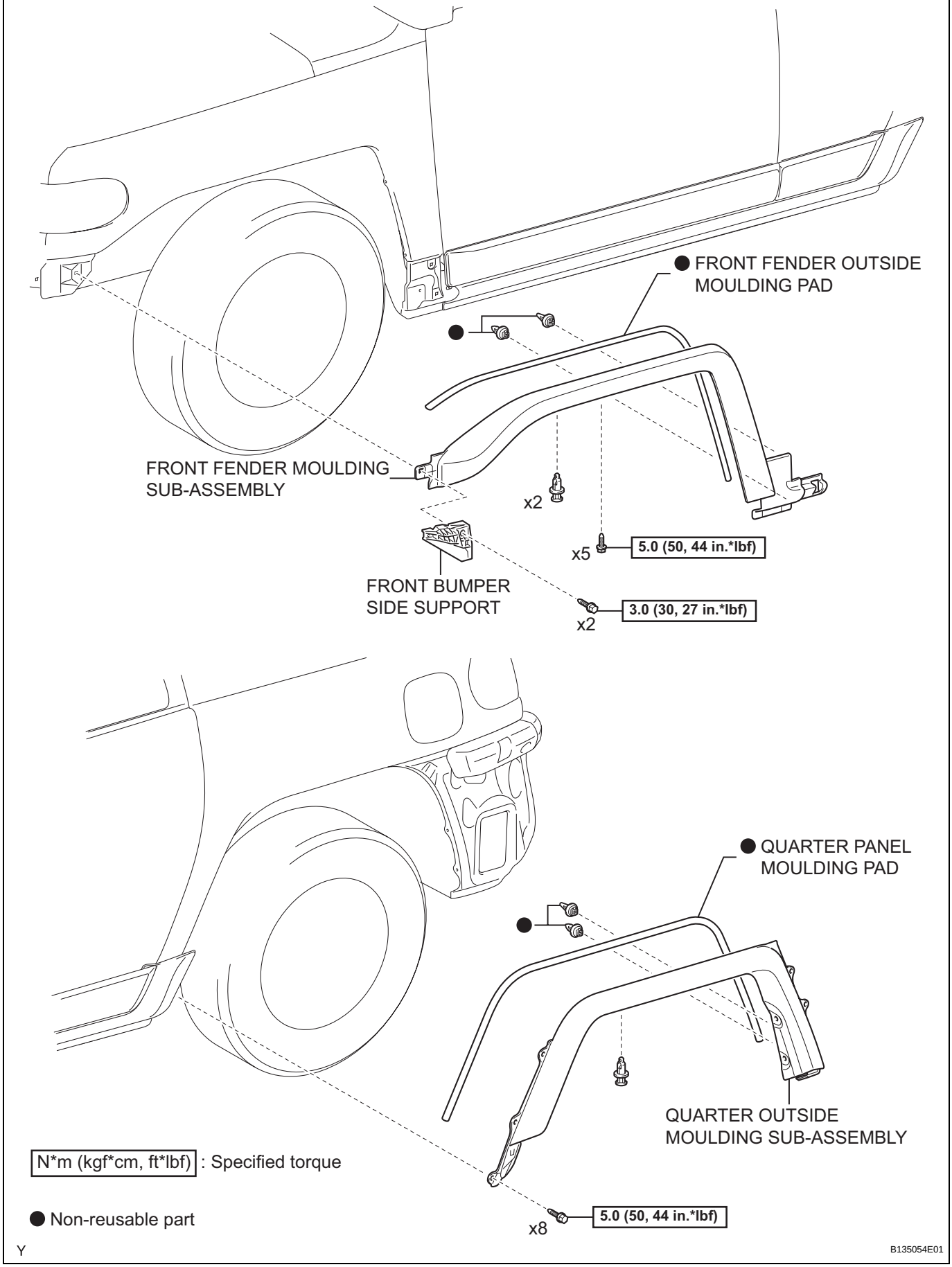
● FRONT FENDER OUTSIDE MOULDING PAD
FRONT FENDER MOULDING SUB-ASSEMBLY
x2
x5
5.0 (50, 44 in.*lbf)
FRONT BUMPER SIDE SUPPORT
3.0 (30, 27 in.*lbf)
x2
● QUARTER PANEL MOULDING PAD
QUARTER OUTSIDE MOULDING SUB-ASSEMBLY
N*m (kgf*cm, ft*lbf) : Specified torque
● Non-reusable part
5.0 (50, 44 in.*lbf)
x8
Y
B135054E01

ET

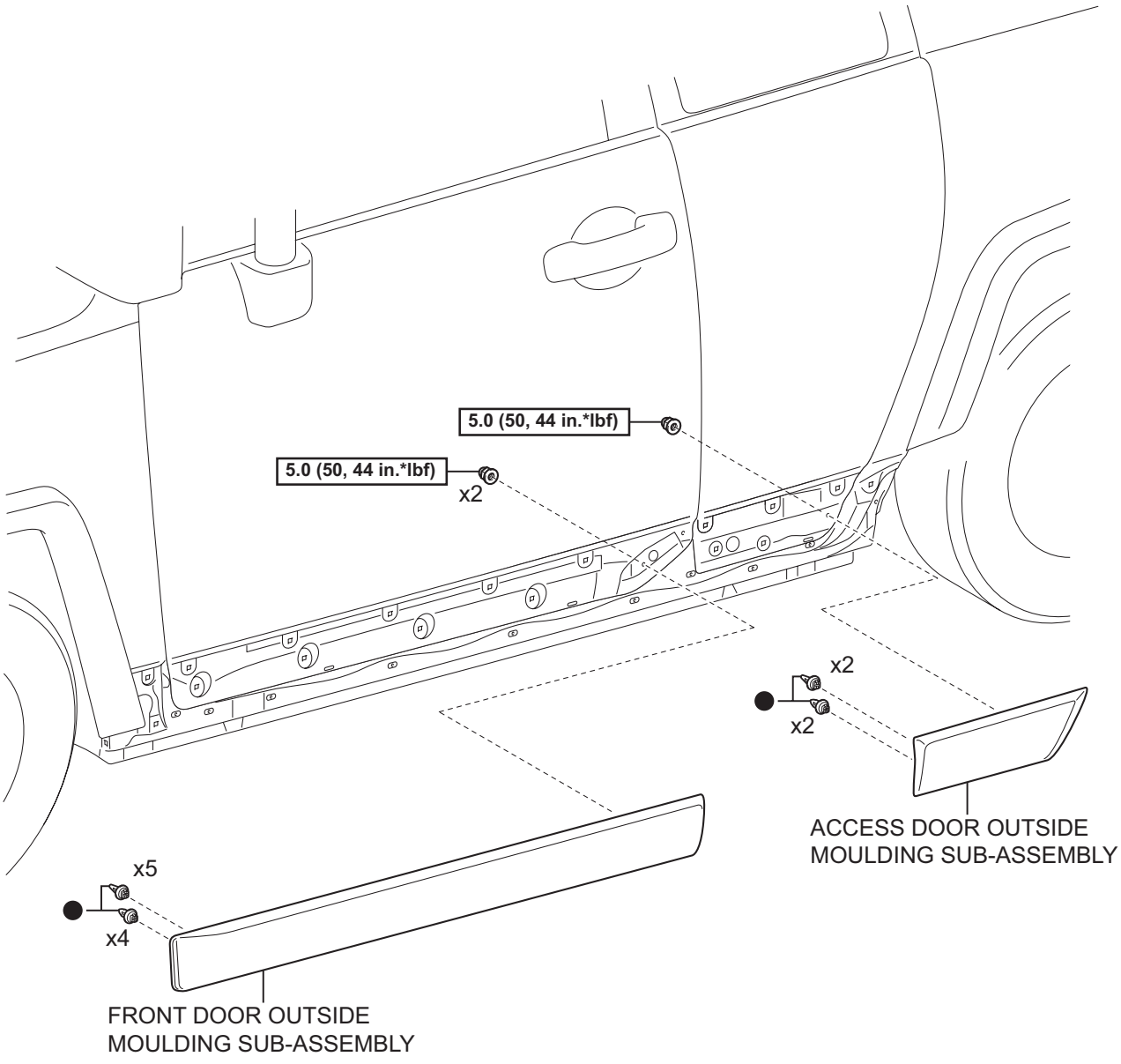

N*m (kgf*cm, ft*lbf) : Specified torque

● Non-reusable part

Y

B135015E01

ET

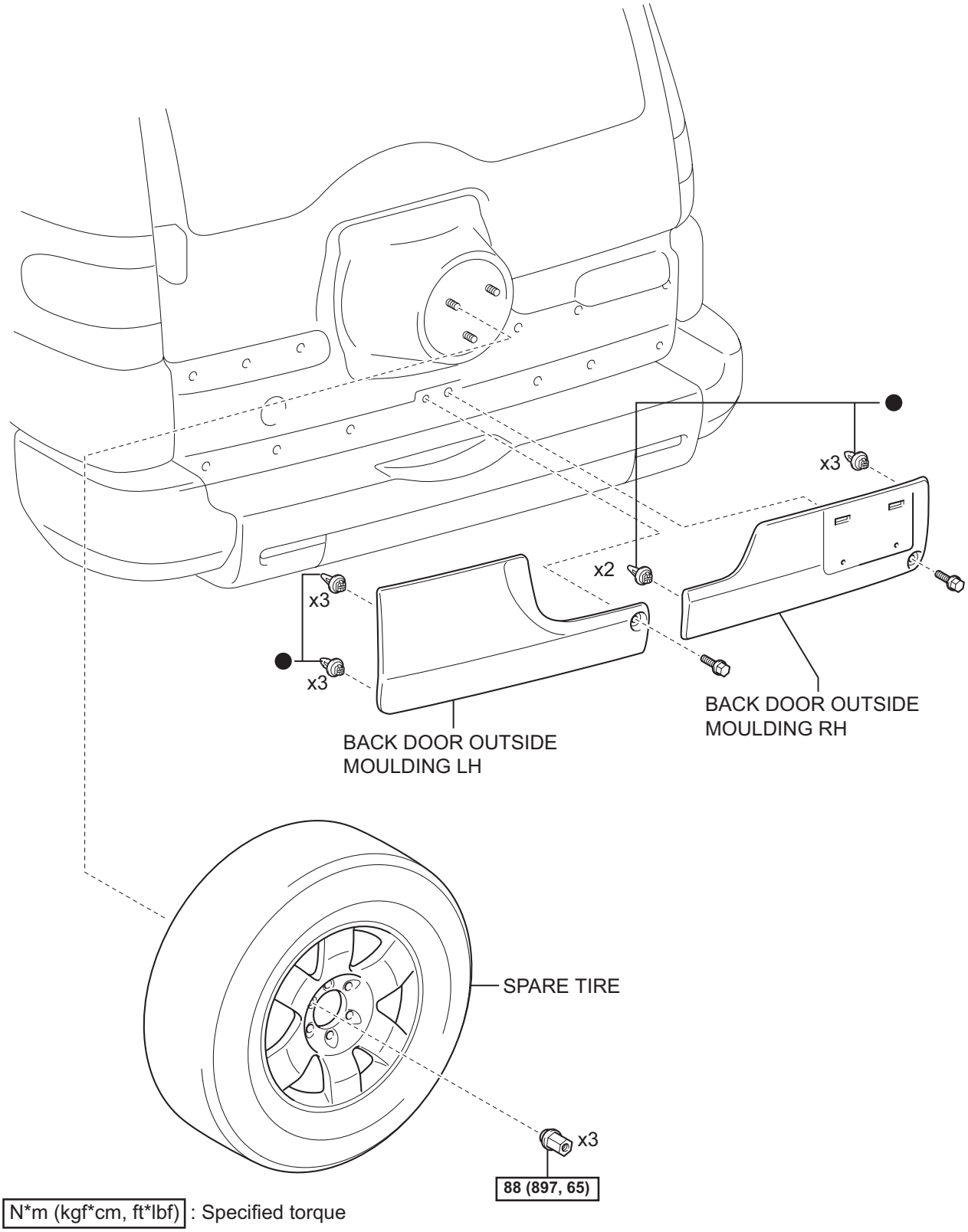

N*m (kgf*cm, ft*lbf) : Specified torque

● Non-reusable part

Y

B135024E01

REMOVAL

HINT:
The procedure described below is for the LH side. Use the same procedure for both the RH and LH sides, unless otherwise specified.

1. **DISCONNECT CABLE FROM NEGATIVE BATTERY TERMINAL (w/ Back Sonar)**
2. **REMOVE RADIATOR GRILLE (See page ET-4)**
3. **REMOVE FRONT BUMPER COVER**
   (a) Apply protective tape as shown in the illustration.

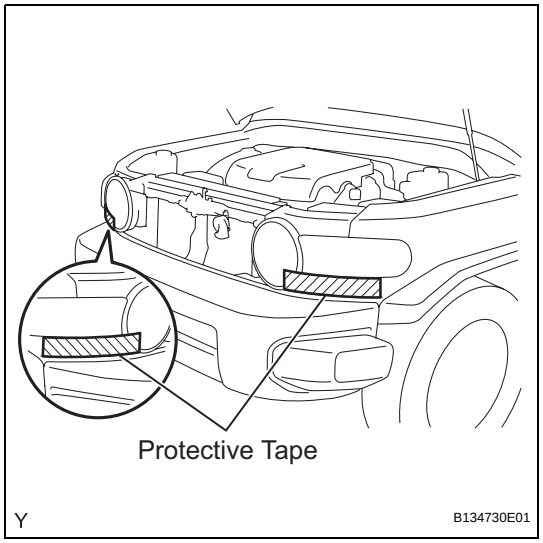

(b) Using a clip remover, remove the 5 clips.

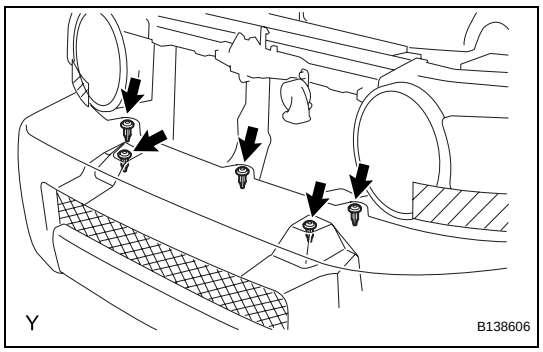

(c) Remove the 8 screws and the 4 bolts.

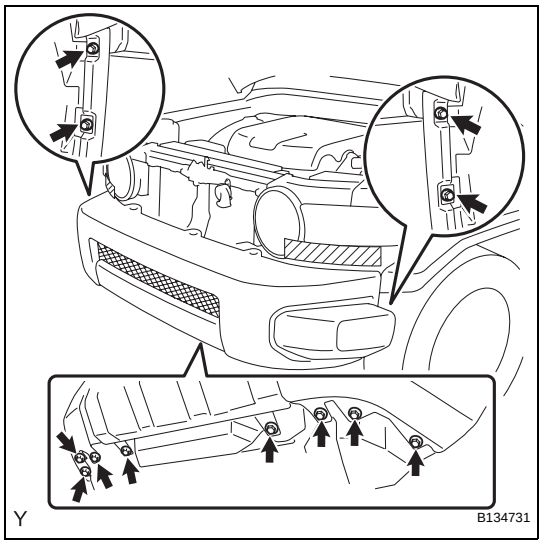

ET

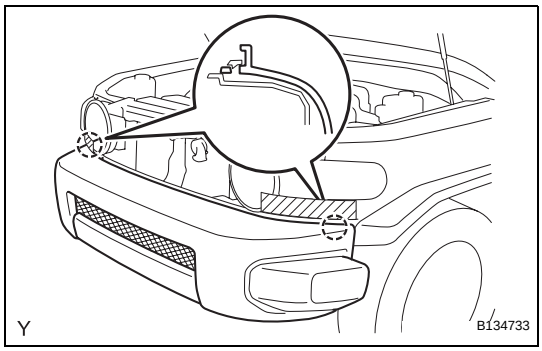

(d) Disengage the 2 claws and remove the front bumper cover.

4. **REMOVE REAR BUMPER COVER (See page ET-17)**
5. **REMOVE FRONT FENDER MUDGUARD (See page ET-83)**
6. **REMOVE QUARTER PANEL MUDGUARD (See page ET-83)**
7. **REMOVE FRONT BUMPER SIDE SUPPORT (See page ET-5)**
8. **REMOVE SIDE STEP SUB-ASSEMBLY (w/ Side Step) (See page ET-86)**
9. **REMOVE ROCKER PANEL MOULDING**
   (a) Apply protective tape to the quarter panel in the area around the rocker panel moulding.
   (b) Using a clip remover, remove the 6 retainers.
   (c) Remove the 3 screws.

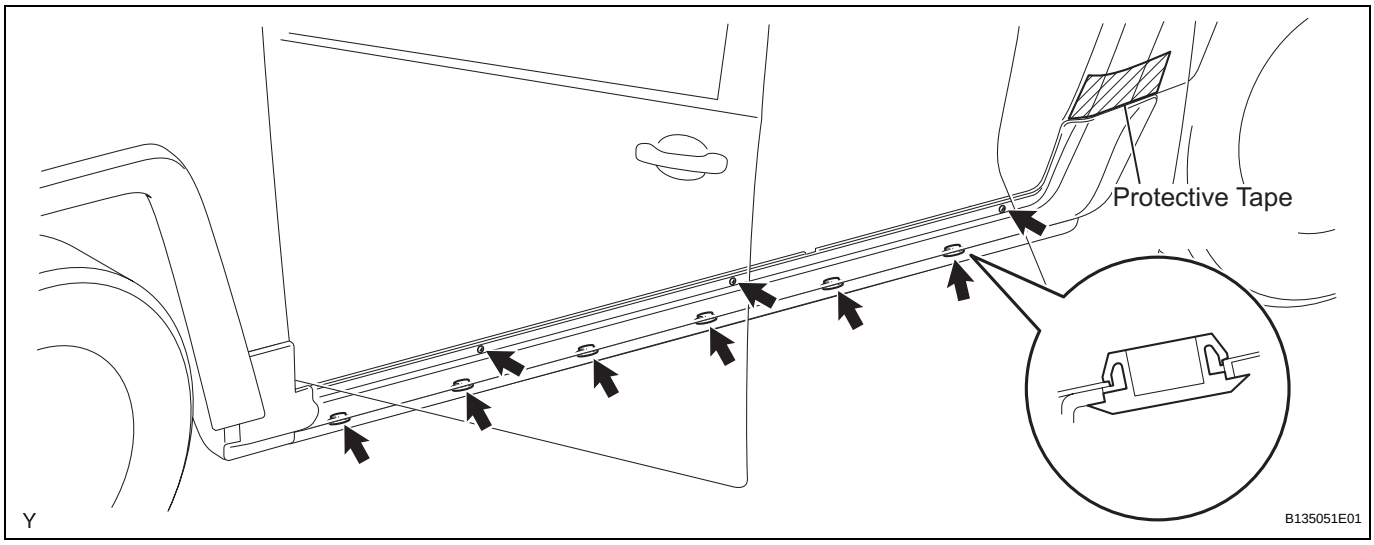

(d) Disengage the 5 clips and remove the rocker panel moulding.

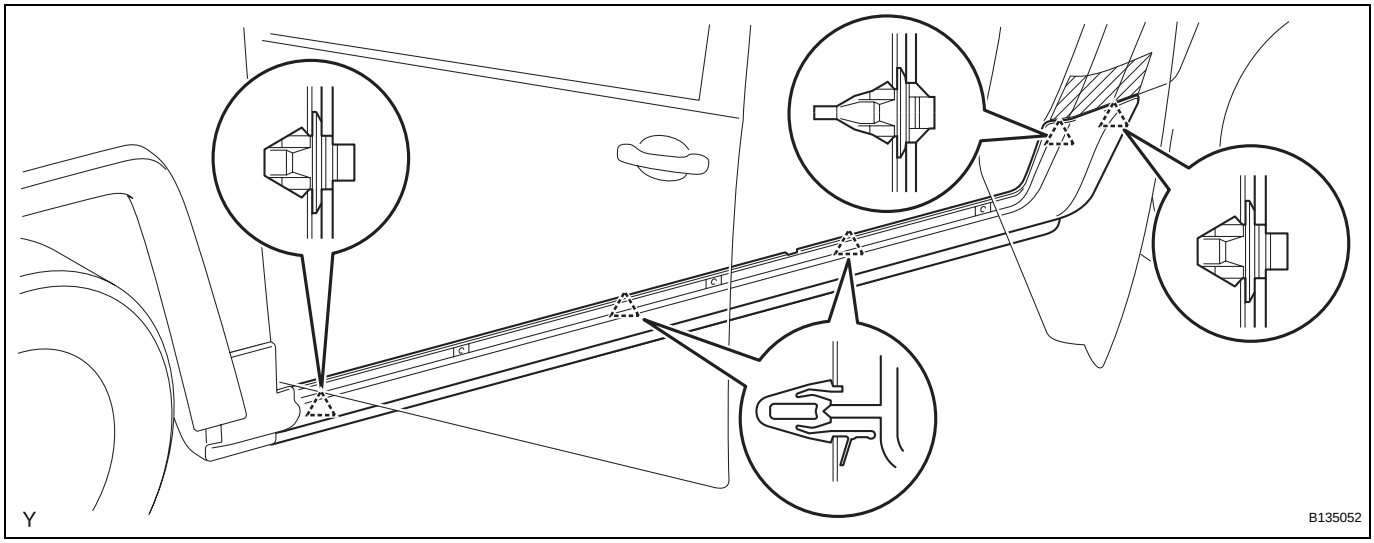

ET

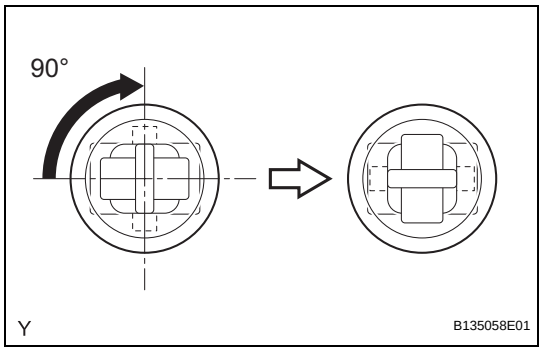

(e) Turn the clips 90° clockwise and remove them.

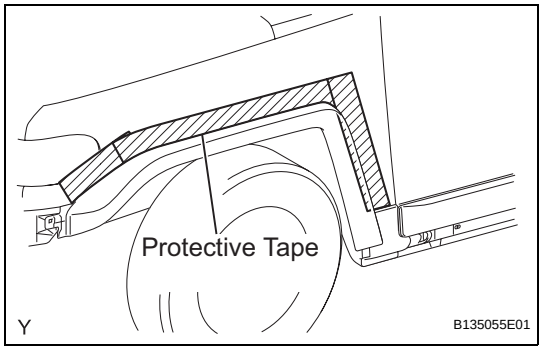

10. REMOVE FRONT FENDER MOULDING SUB-ASSEMBLY

(a) Apply protective tape to the fender panel in the area around the front fender moulding.

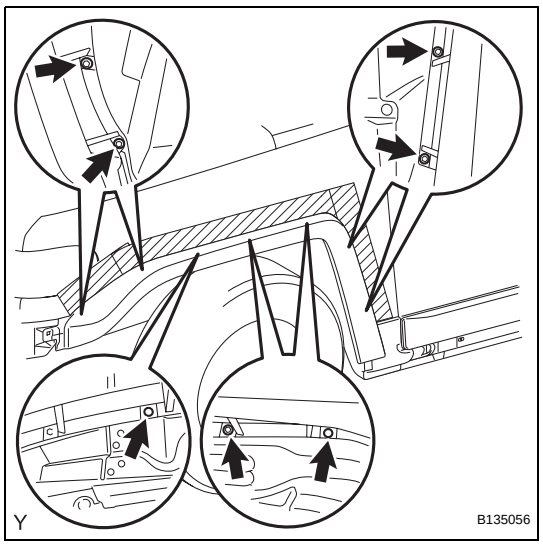

(b) Using a clip remover, remove the 2 clips.
(c) Remove the 5 screws.

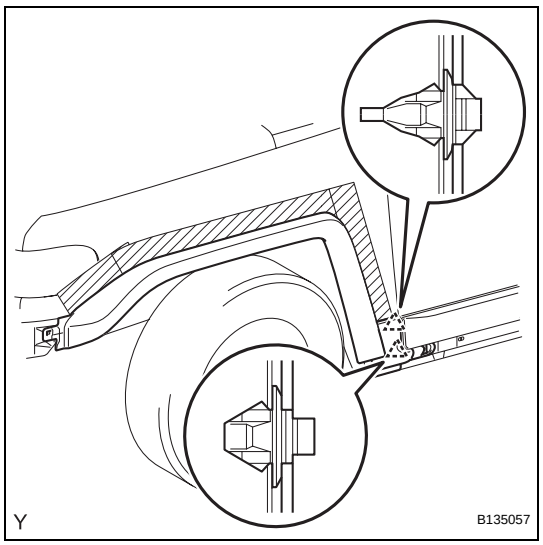

(d) Disengage the 2 clips and remove the front fender moulding.

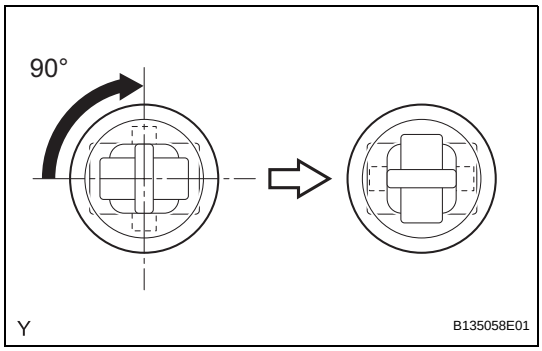

(e) Turn the clips 90° clockwise and remove them.

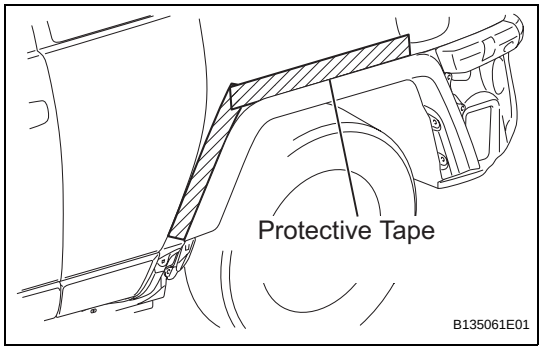

11. REMOVE QUARTER OUTSIDE MOULDING SUB-ASSEMBLY

(a) Apply protective tape to the quarter panel in the area around the quarter outside moulding.

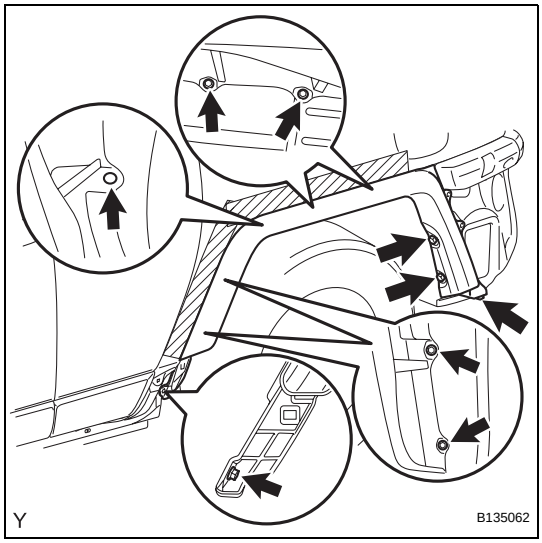

(b) Using a clip remover, remove the clip.
(c) Remove the 8 screws.

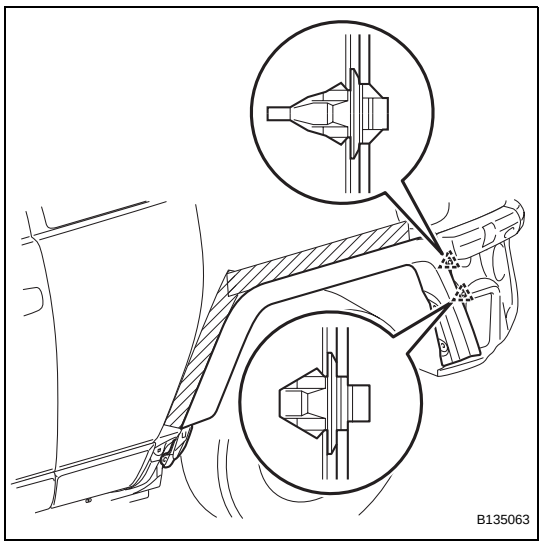

(d) Disengage the 2 clips and remove the quarter outside moulding.

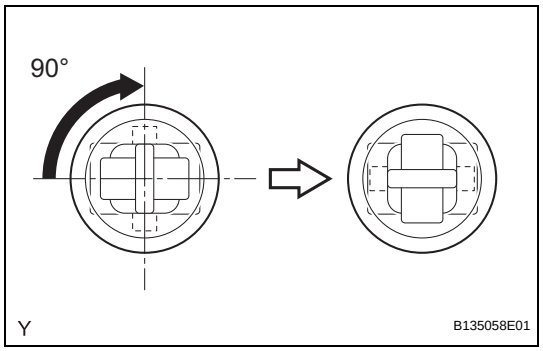

(e) Turn the clips 90° clockwise and remove them.

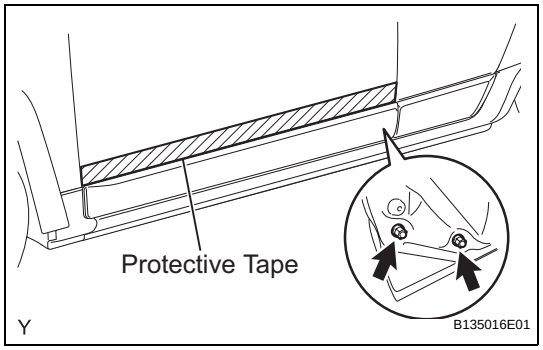

12. REMOVE FRONT DOOR OUTSIDE MOULDING SUB-ASSEMBLY

(a) Apply protective tape to the front door panel in the area around the front door outside moulding.

(b) Remove the 2 nuts.

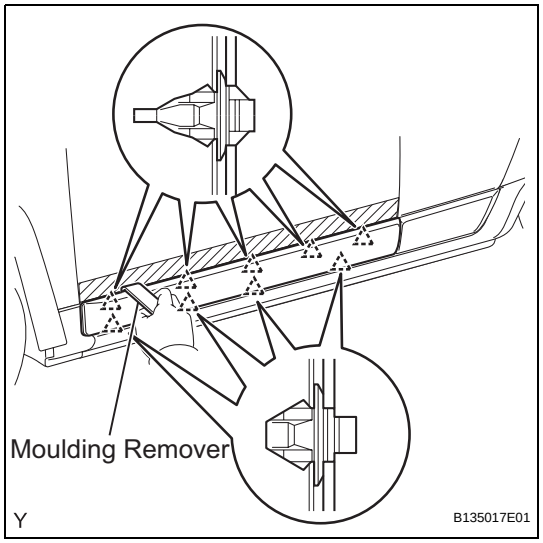

(c) Using a moulding remover, disengage the 9 clips and remove the front door outside moulding.

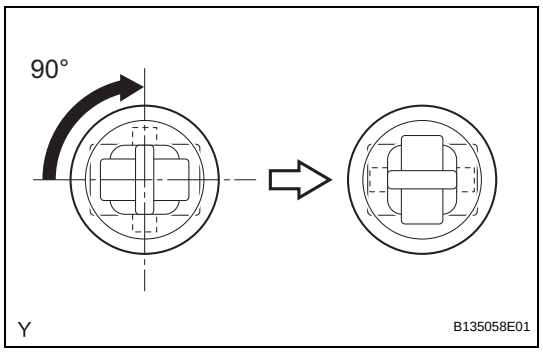

(d) Turn the clips 90° clockwise and remove them.

ET

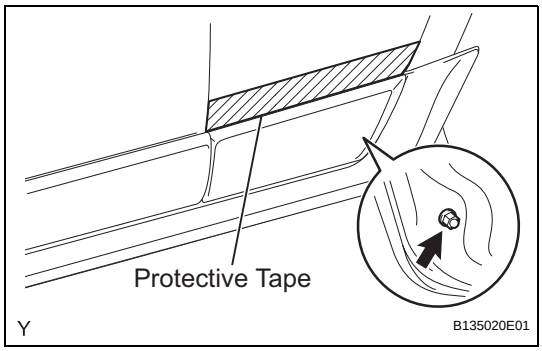

13. REMOVE ACCESS DOOR OUTSIDE MOULDING SUB-ASSEMBLY

(a) Apply protective tape to the access door panel in the area around the access door outside moulding.

(b) Remove the nut.

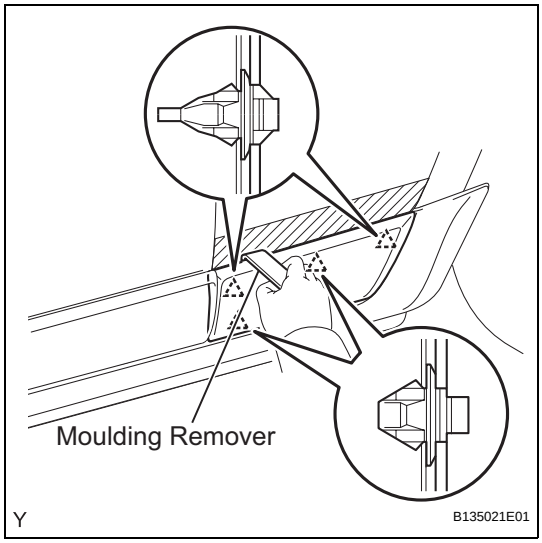

(c) Using a moulding remover, disengage the 4 clips and remove the access door outside moulding.

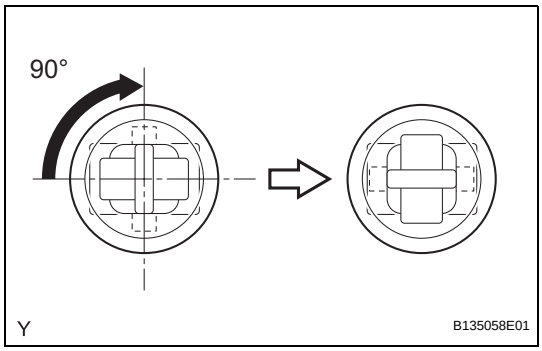

(d) Turn the clips 90° clockwise and remove them.

14. REMOVE SPARE TIRE

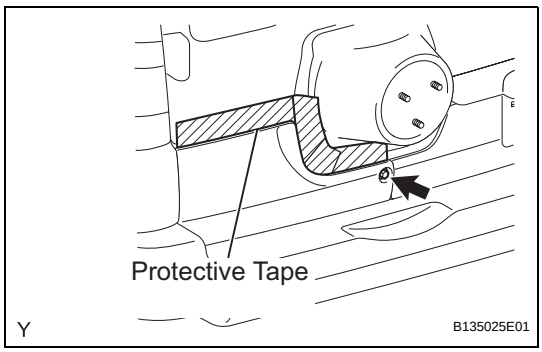

15. REMOVE BACK DOOR OUTSIDE MOULDING LH

(a) Apply protective tape to the back door panel in the area around the back door outside moulding.

(b) Remove the screw.

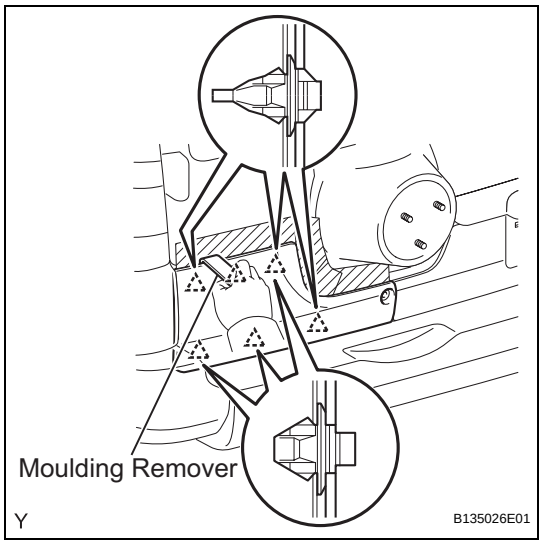

(c) Using a moulding remover, disengage the 6 clips and remove the back door outside moulding.

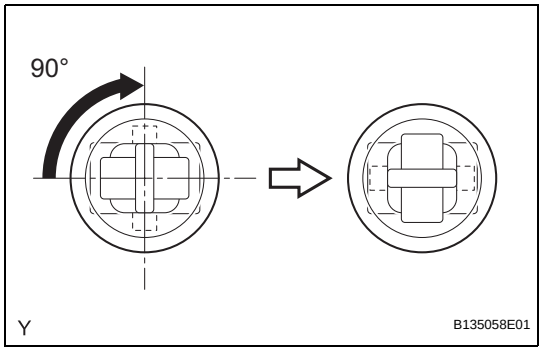

(d) Turn the clips 90° clockwise and remove them.

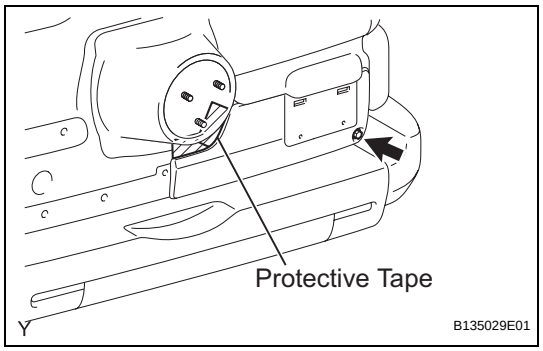

16. REMOVE BACK DOOR OUTSIDE MOULDING RH

(a) Apply protective tape to the back door panel in the area around the back door outside moulding.

(b) Remove the screw.

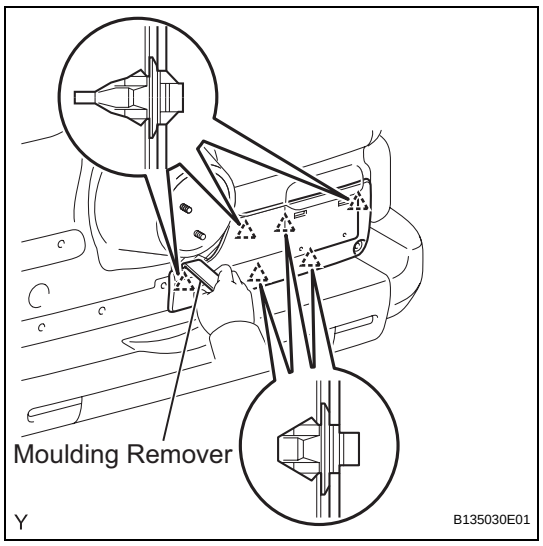

(c) Using a moulding remover, disengage the 6 clips and remove the back door outside moulding.

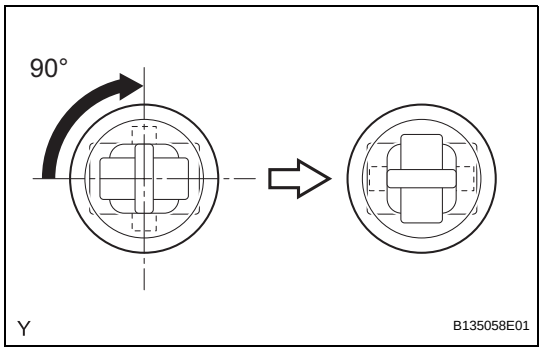

(d) Turn the clips 90° clockwise and remove them.

INSTALLATION

HINT:
The procedure described below is for the LH side. Use the same procedure for both the RH and LH sides, unless otherwise specified.

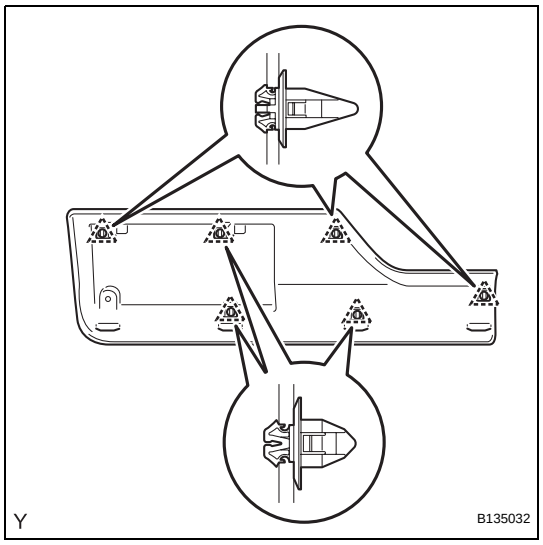

1. INSTALL BACK DOOR OUTSIDE MOULDING RH

(a) Install 6 new clips in the positions shown in the illustration.
NOTICE:
If you install the clips wrongly, the installation of the back door outside moulding will be improper.

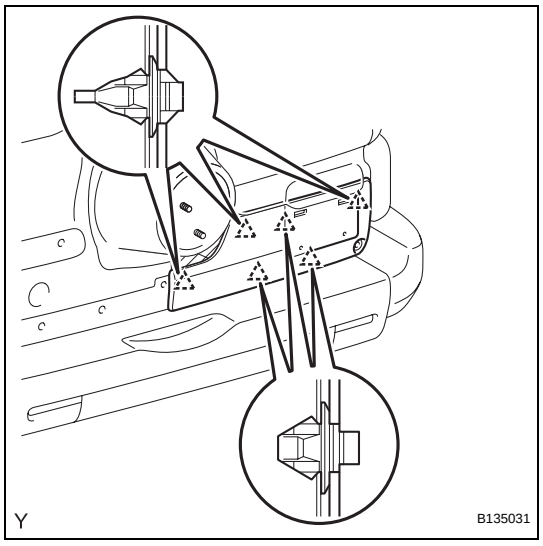

(b) Engage the 6 clips and install the back door outside moulding.

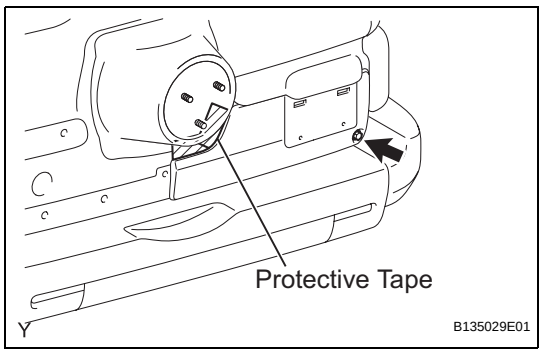

(c) Tighten the screw.
(d) Remove the protective tape.

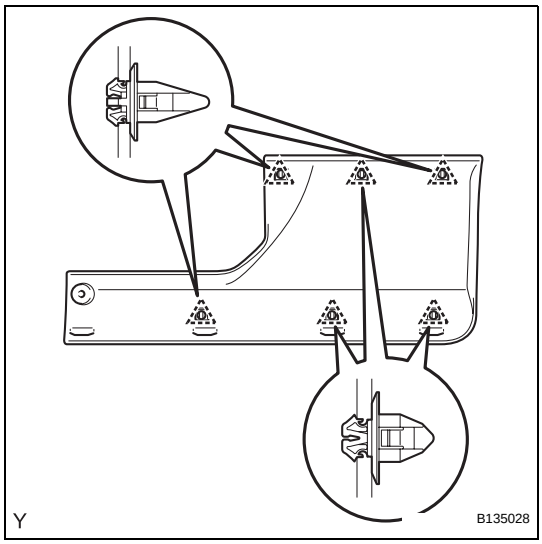

2. INSTALL BACK DOOR OUTSIDE MOULDING LH

(a) Install 6 new clips in the positions shown in the illustration.

NOTICE:

If you install the clips wrongly, the installation of the back door outside moulding will be improper.

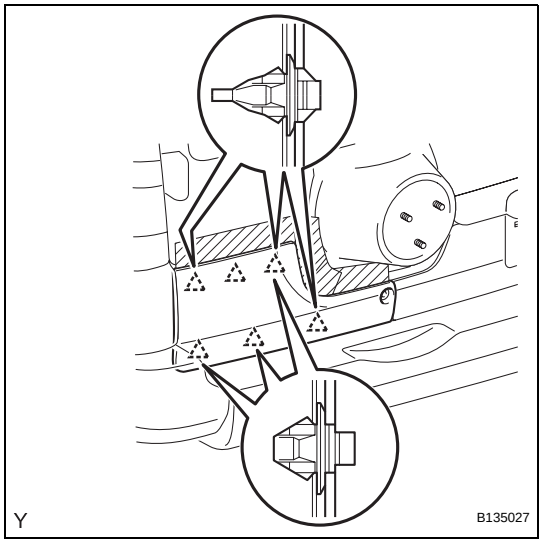

(b) Engage the 6 clips and install the back door outside moulding.

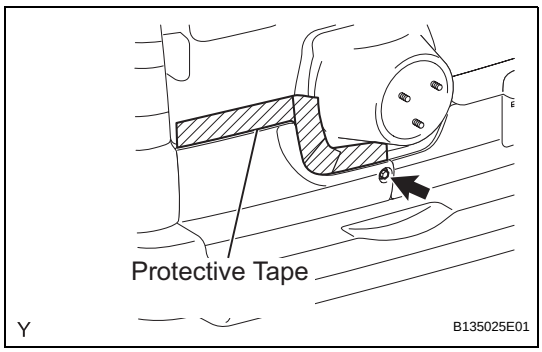

(c) Tighten the screw.

(d) Remove the protective tape.

3. INSTALL SPARE TIRE

Torque: 88 N*m (897 kgf*cm, 65 ft.*lbf)

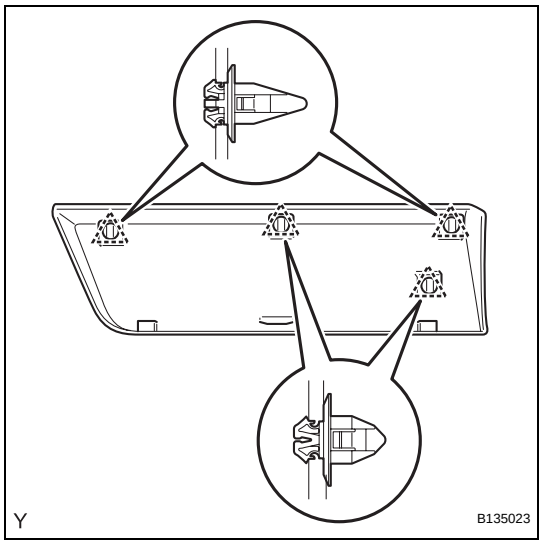

4. INSTALL ACCESS DOOR OUTSIDE MOULDING SUB-ASSEMBLY

(a) Install 4 new clips in the positions shown in the illustration.
NOTICE:
If you install the clips wrongly, the installation of the access door outside moulding will be improper.

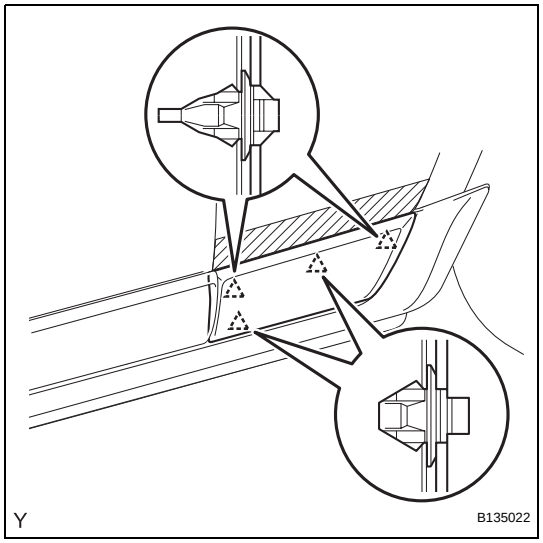

(b) Engage the 4 clips and install the access door outside moulding.

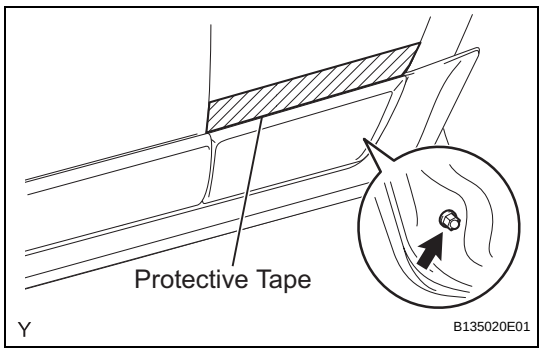

(c) Tighten the nut.
Torque: 5.0 N*m (50 kgf*cm, 44 in.*lbf)

(d) Remove the protective tape.

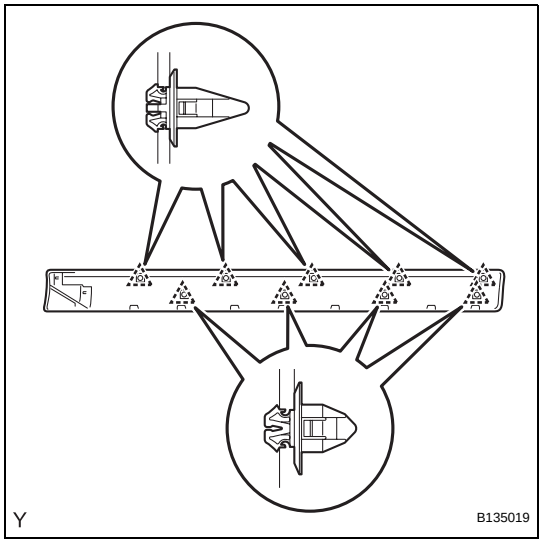

5. INSTALL FRONT DOOR OUTSIDE MOULDING SUB-ASSEMBLY

(a) Install 9 new clips in the positions shown in the illustration.

NOTICE:

If you install the clips wrongly, the installation of the rear door outside moulding will be improper.

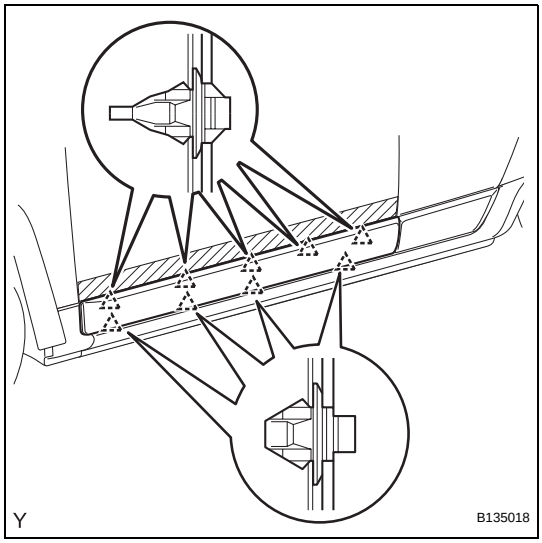

(b) Engage the 9 clips and install the front door outside moulding.

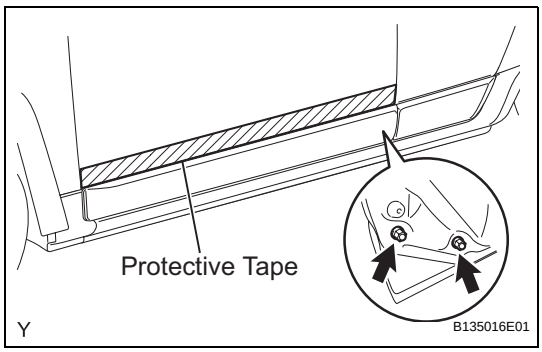

(c) Tighten the 2 nuts.

Torque: 5.0 N*m (50 kgf*cm, 44 in.*lbf)

(d) Remove the protective tape.

6. INSTALL QUARTER PANEL MOULDING PAD

HINT:

Only follow this procedure when replacing the quarter outside moulding pad.

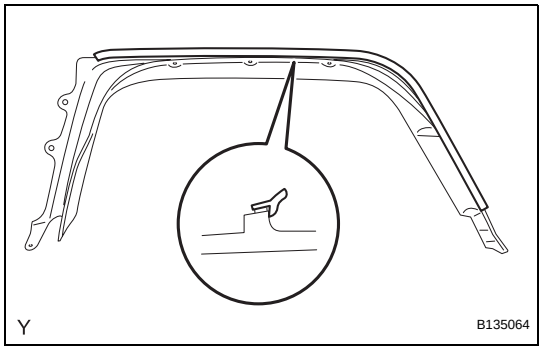

(a) Install a new quarter outside moulding pad in the position shown in the illustration.

ET

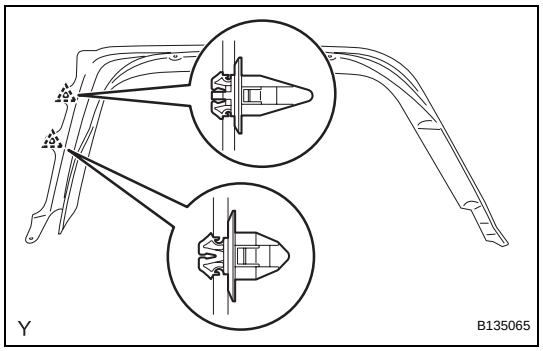

7. INSTALL QUARTER OUTSIDE MOULDING SUB-ASSEMBLY

(a) Install 2 new clips in the positions shown in the illustration.
NOTICE:
If you install the clips wrongly, the installation of the quarter outside moulding will be improper.

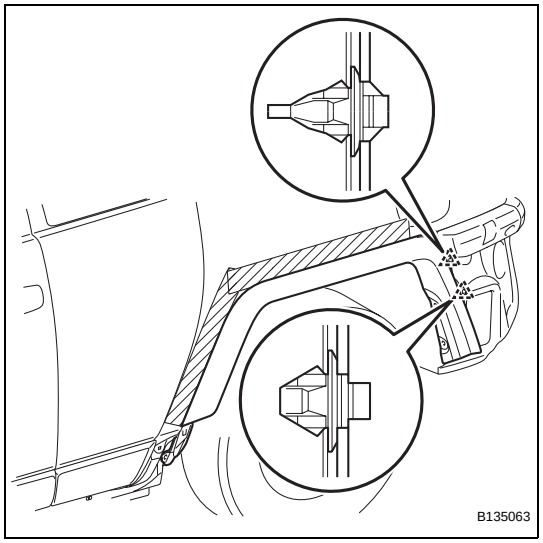

(b) Engage the 2 clips and install the quarter outside moulding.

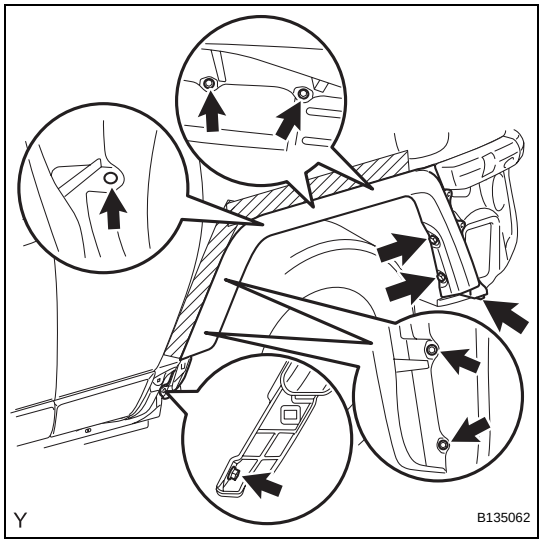

(c) Tighten the 8 screws
Torque: 5.0 N*m (50 kgf*cm, 44 in.*lbf)

(d) Install the clip.

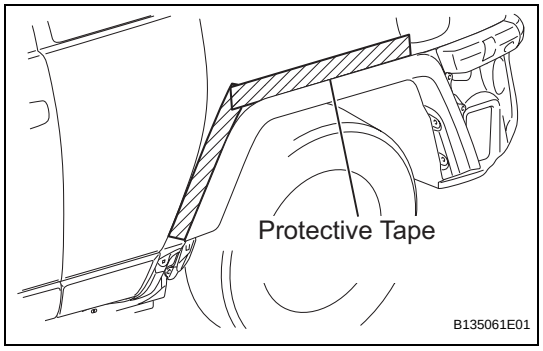

(e) Remove the protective tape.

8. INSTALL FRONT FENDER OUTSIDE MOULDING PAD

HINT:
Only follow this procedure when replacing the front wheel opening extension pad.

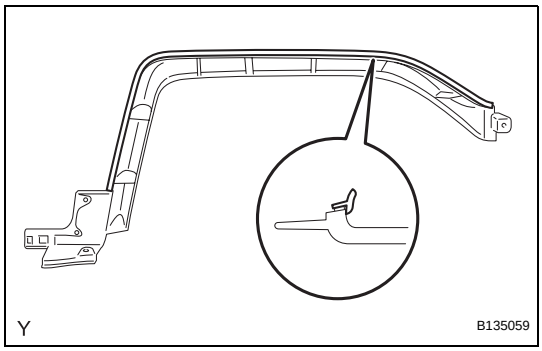

(a) Install a new front wheel opening extension pad in the position shown in the illustration.

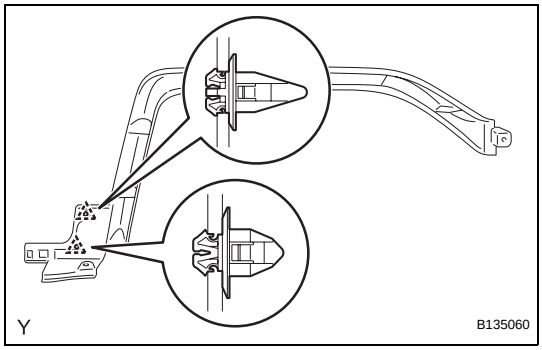

9. INSTALL FRONT FENDER MOULDING SUB-ASSEMBLY

(a) Install 2 new clips in the positions shown in the illustration.

NOTICE:
If you install the clips wrongly, the installation of the front fender moulding will be improper.

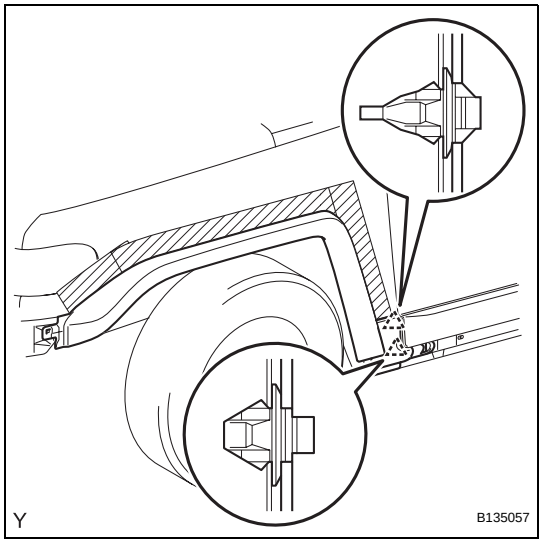

(b) Engage the 2 clips and install the front fender moulding.

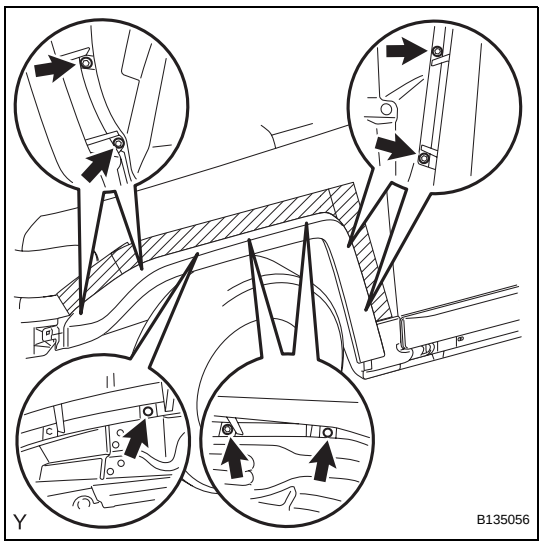

(c) Tighten the 5 screws.
Torque: 5.0 N*m (50 kgf*cm, 44 in.*lbf)

(d) Install the 2 clips

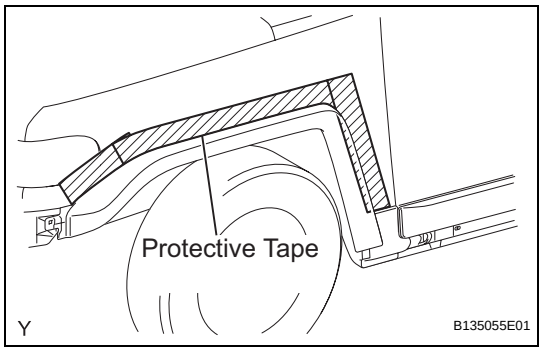

(e) Remove the protective tape.

10. INSTALL FRONT BUMPER SIDE SUPPORT (See page ET-9)

11. INSTALL ROCKER PANEL MOULDING

(a) Install 3 clips in the positions shown in the illustration.

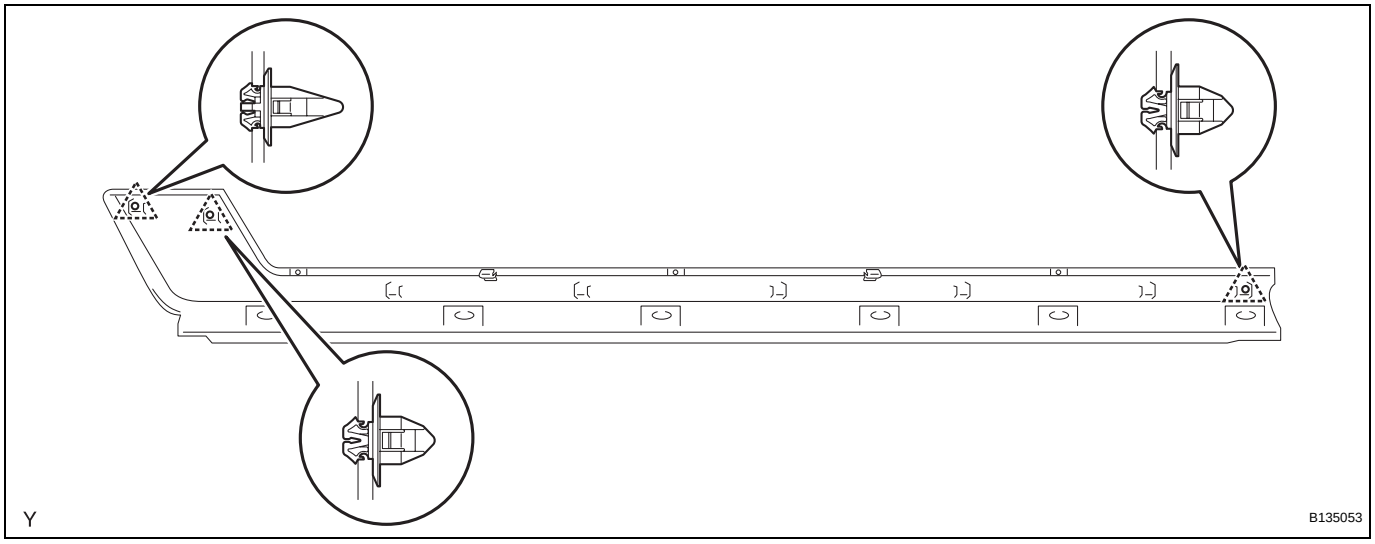

NOTICE:
If you install the clips wrongly, the installation of the rocker panel moulding will be improper.

(b) Engage the 5 clips and install the rocker panel moulding.

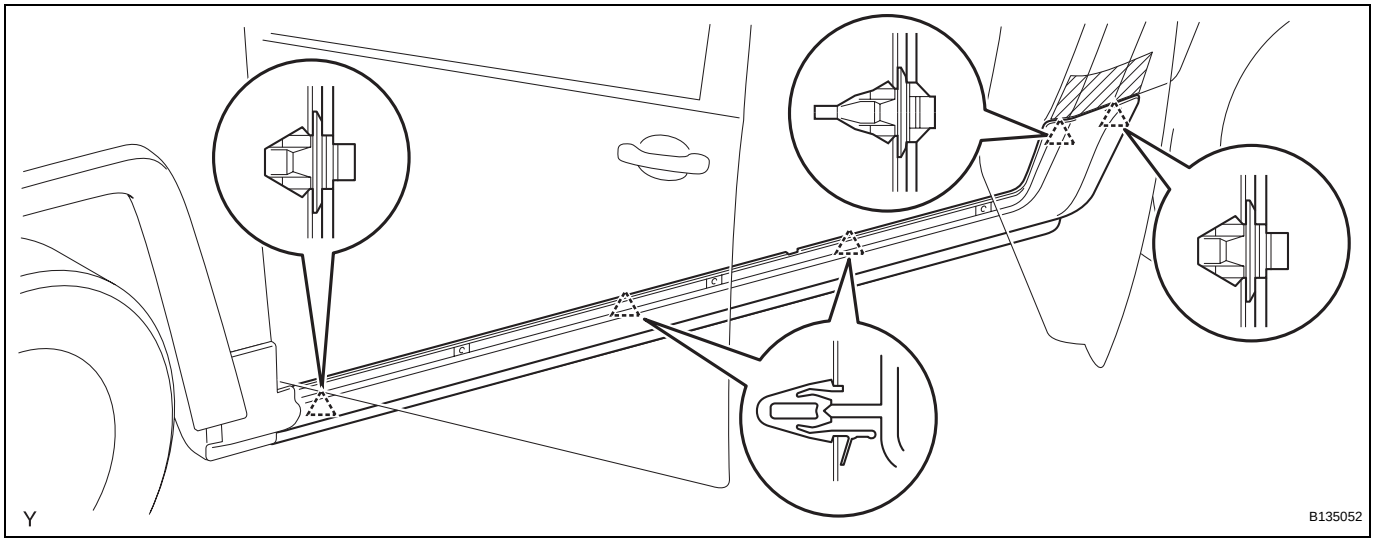

(c) Tighten the 3 screws.
Torque: 5.0 N*m (50 kgf*cm, 44 in.*lbf)

ET

(d) Install the 6 retainers.

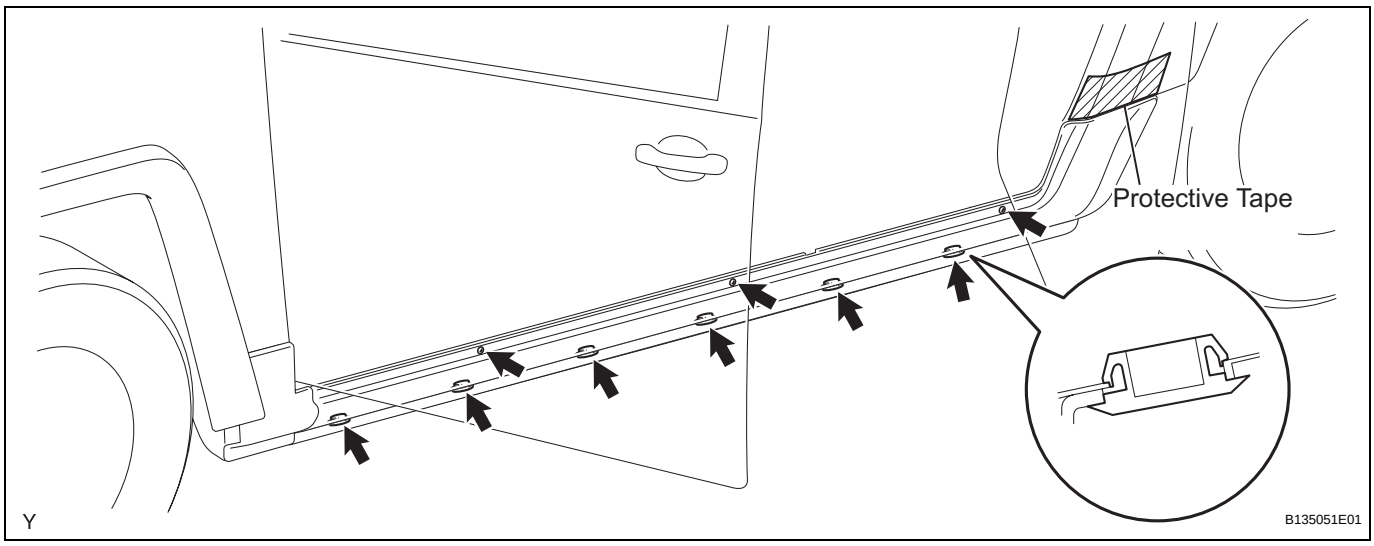

12. **INSTALL SIDE STEP SUB-ASSEMBLY (See page ET-87)**
13. **INSTALL QUARTER PANEL MUDGUARD (See page ET-83)**
14. **INSTALL FRONT FENDER MUDGUARD (See page ET-84)**
15. **INSTALL REAR BUMPER COVER (See page ET-25)**
16. **INSTALL FRONT BUMPER COVER**
    (a) Engage the 2 claws and install the front bumper cover.

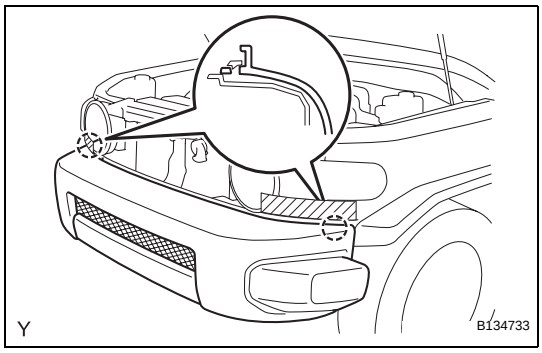

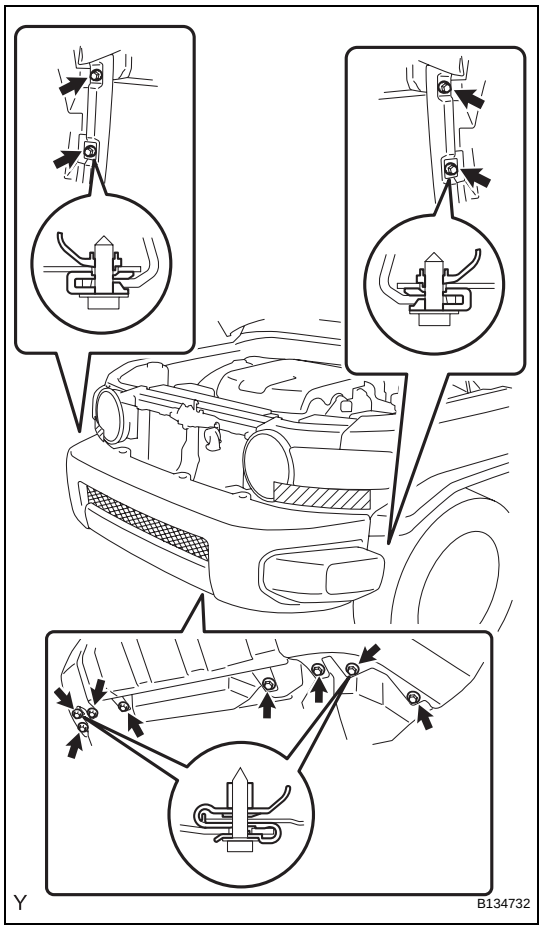

(b) Tighten the 8 screws and the 4 bolts.
Torque: 3.0 N*m (30 kgf*cm, 27 in.*lbf) for screw
8.0 N*m (80 kgf*cm, 71 in.*lbf) for bolt

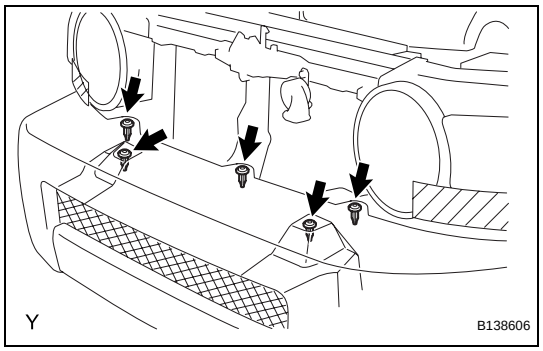

(c) Install the 5 clips.

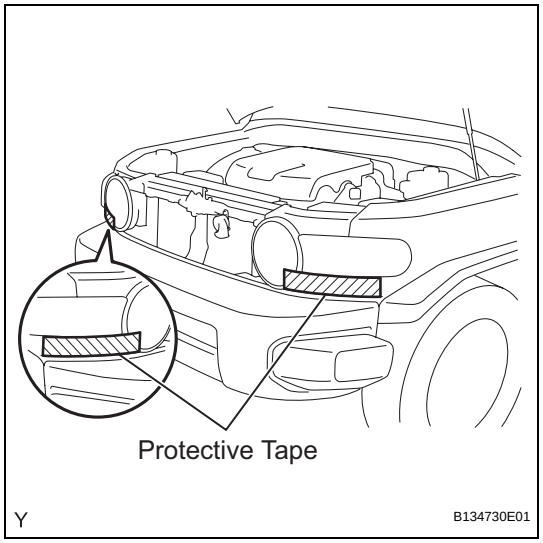

(d) Remove the protective tape.

17. **INSTALL RADIATOR GRILLE (See page ET-11)**

18. **CONNECT CABLE TO NEGATIVE BATTERY TERMINAL (w/ Back Sonar)**
Torque: 3.9 N*m (40 kgf*cm, 35 in.*lbf)

FENDER PANEL MUDGUARD

COMPONENTS

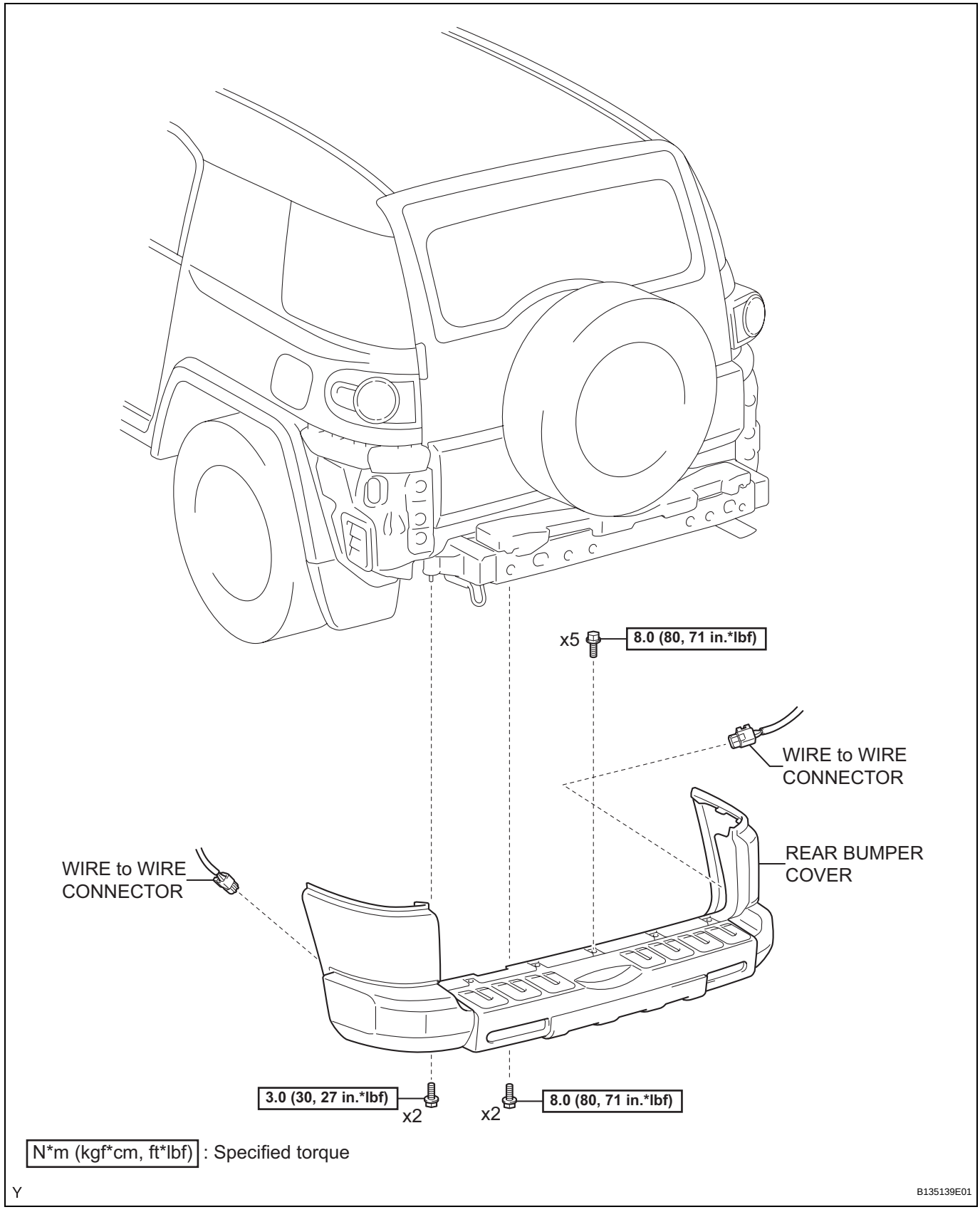

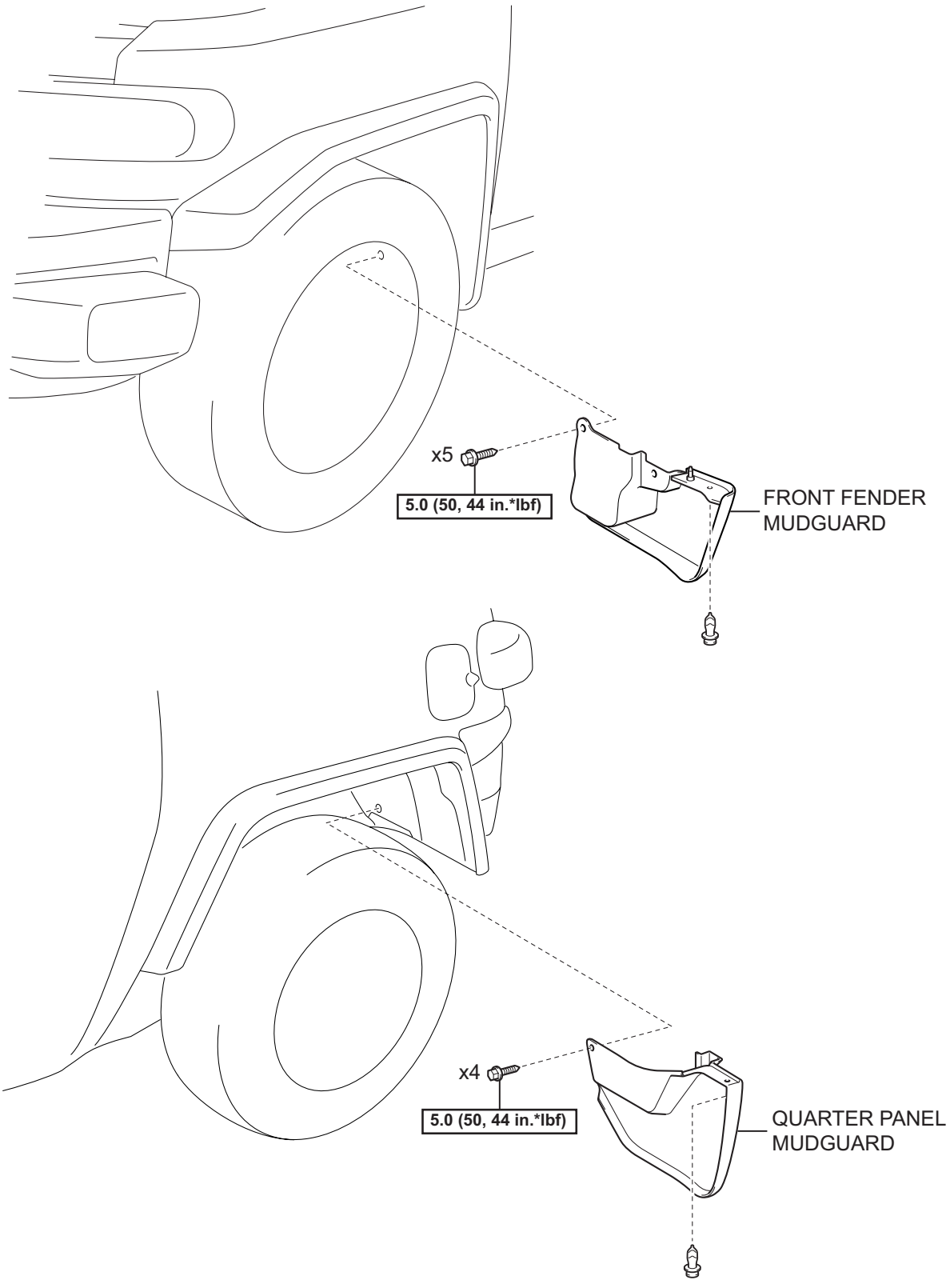

N*m (kgf*cm, ft*lbf) : Specified torque

Y

B135081E01

ET

REMOVAL

HINT:
The procedure described below is for the LH side. Use the same procedure for both the RH and LH sides, unless otherwise specified.

1. **DISCONNECT CABLE FROM NEGATIVE BATTERY TERMINAL (w/ Back Sonar)**
2. **REMOVE REAR BUMPER COVER (See page ET-17)**
3. **REMOVE FRONT FENDER MUDGUARD**
   (a) Using a clip remover, remove the clip.
   (b) Remove the 5 screws and the front fender mudguard.

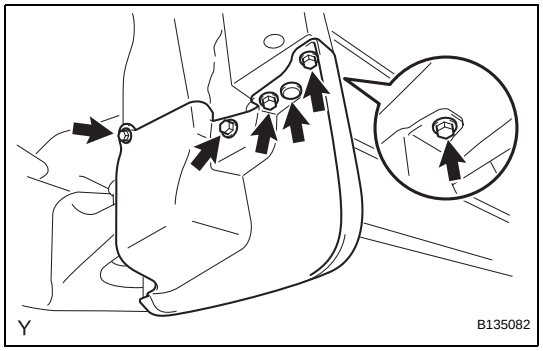

4. **REMOVE QUARTER PANEL MUDGUARD**
   (a) Using a clip remover, remove the clip.
   (b) Remove the 4 screws and the quarter panel mudguard.

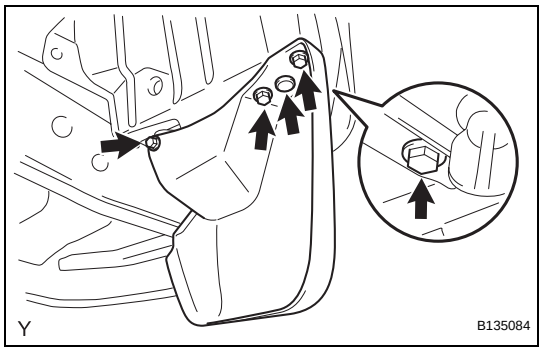

INSTALLATION

HINT:
The procedure described below is for the LH side. Use the same procedure for both the RH and LH sides, unless otherwise specified.

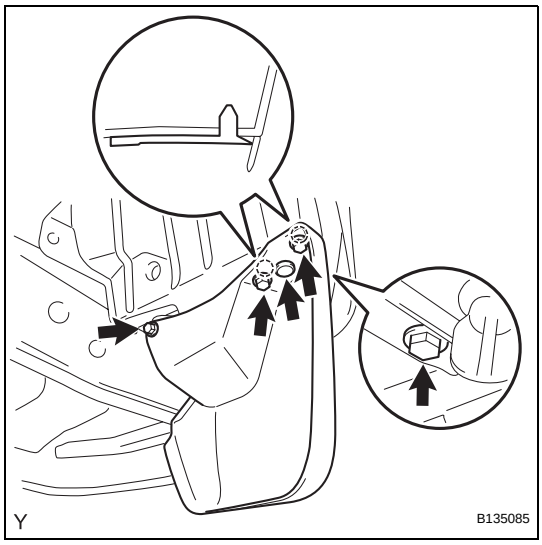

1. INSTALL QUARTER PANEL MUDGUARD
(a) Align the 2 pins of the quarter panel mudguard with the installation hole of the quarter outside moulding.
(b) Install the quarter panel mudguard with the 4 screws.
Torque: 5.0 N*m (50 kgf*cm, 44 in.*lbf)
(c) Install the clip.

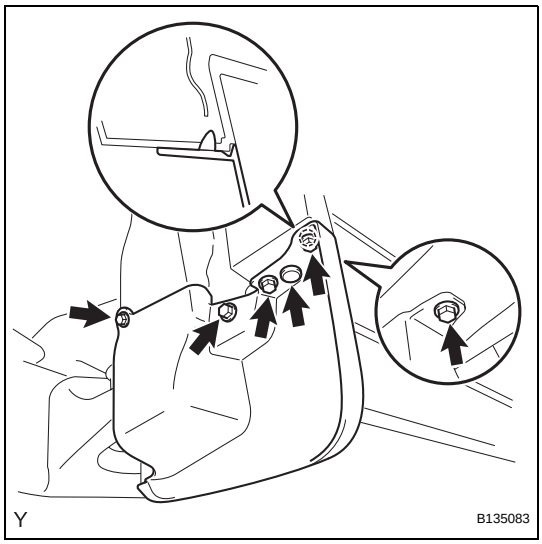

2. INSTALL FRONT FENDER MUDGUARD
(a) Align the pin of the front fender mudguard with the installation hole of the front fender moulding.
(b) Install the front fender mudguard with the 5 screws.
Torque: 5.0 N*m (50 kgf*cm, 44 in.*lbf)
(c) Install the clip.

3. INSTALL REAR BUMPER COVER (See page ET-25)

4. CONNECT CABLE TO NEGATIVE BATTERY TERMINAL (w/ Back Sonar)
Torque: 3.9 N*m (40 kgf*cm, 35 in.*lbf)

SIDE STEP

COMPONENTS

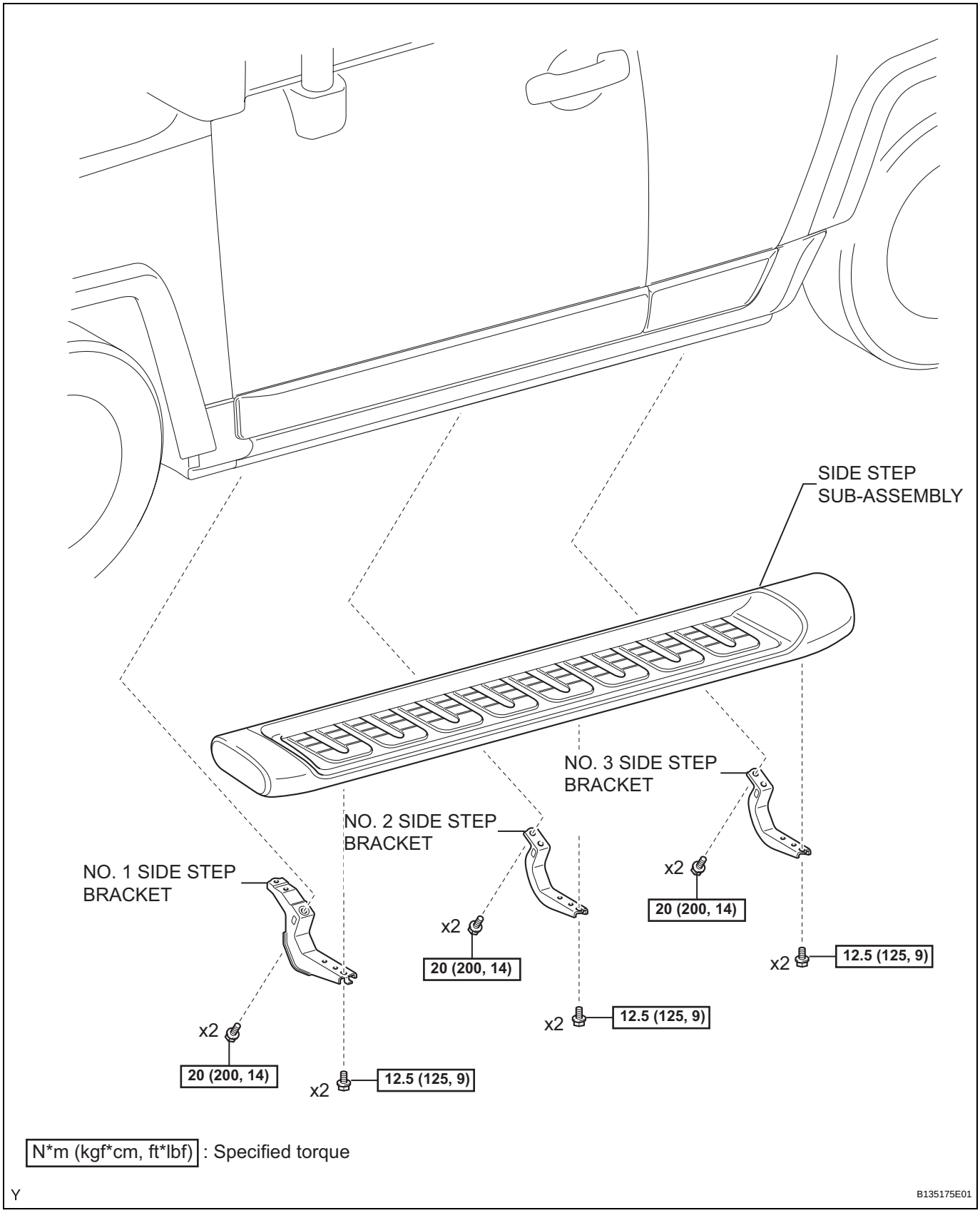

ET

REMOVAL

HINT:
The procedure described below is for the LH side. Use the same procedure for both the RH and LH sides, unless otherwise specified.

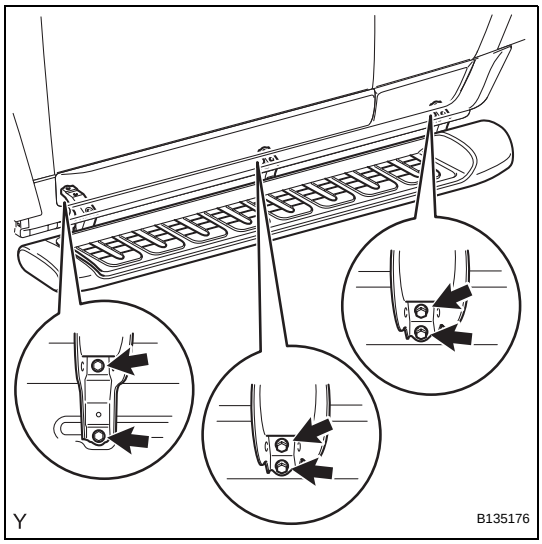

1. REMOVE SIDE STEP SUB-ASSEMBLY
(a) Remove the 6 bolts and the side step.

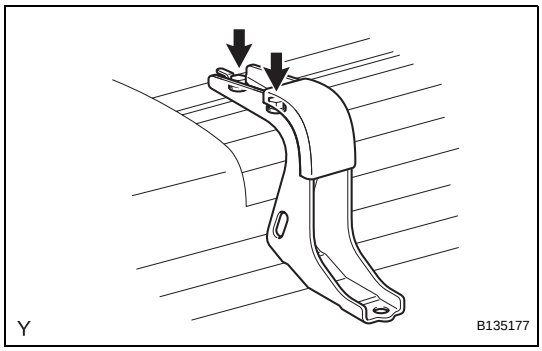

2. REMOVE NO. 1 SIDE STEP BRACKET
(a) Remove the 2 bolts and the No. 1 side step bracket.

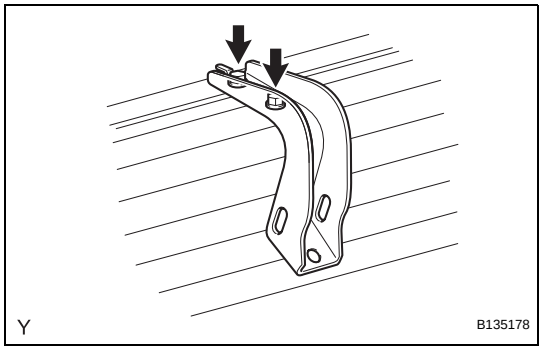

3. REMOVE NO. 2 SIDE STEP BRACKET
(a) Remove the 2 bolts and the No. 2 side step bracket.

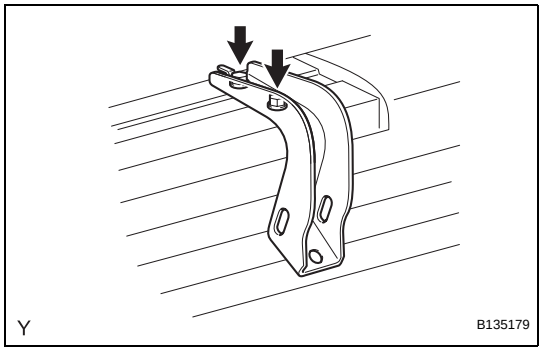

4. REMOVE NO. 3 SIDE STEP BRACKET
(a) Remove the 2 bolts and the No. 3 side step bracket.

ET

INSTALLATION

HINT:
The procedure described below is for the LH side. Use the same procedure for both the RH and LH sides, unless otherwise specified.

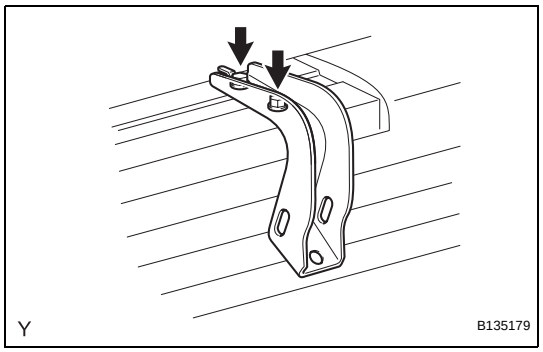

1. INSTALL NO. 3 SIDE STEP BRACKET
(a) Install the No. 3 side step bracket with the 2 bolts.
Torque: 12.5 N*m (125 kgf*cm, 9 ft.*lbf)

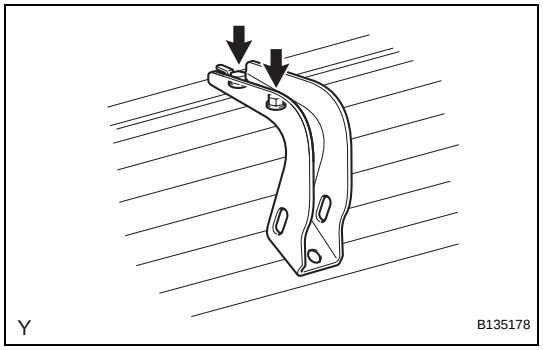

2. INSTALL NO. 2 SIDE STEP BRACKET
(a) Install the No. 2 side step bracket with the 2 bolts.
Torque: 12.5 N*m (125 kgf*cm, 9 ft.*lbf)

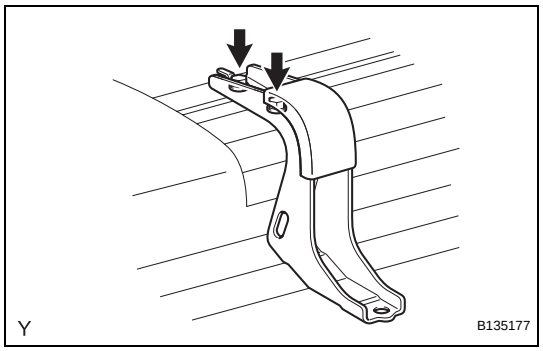

3. INSTALL NO. 1 SIDE STEP BRACKET
(a) Install the No. 1 side step bracket with the 2 bolts.
Torque: 12.5 N*m (125 kgf*cm, 9 ft.*lbf)

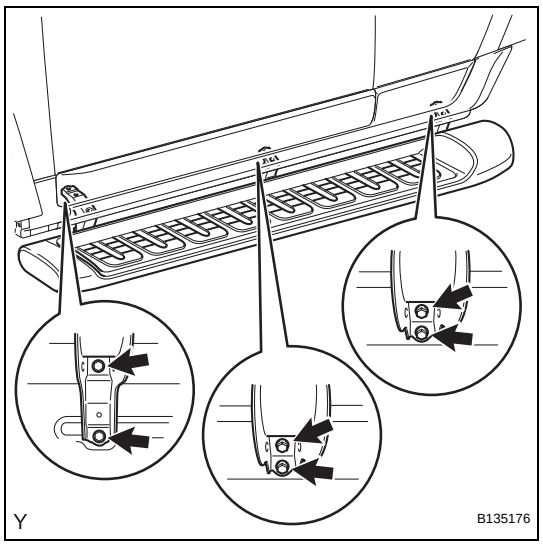

4. INSTALL SIDE STEP SUB-ASSEMBLY
(a) Install the step with 6 bolts.
Torque: 20 N*m (200 kgf*cm, 14 ft.*lbf)

ET

BACK DOOR OUTSIDE GARNISH

COMPONENTS

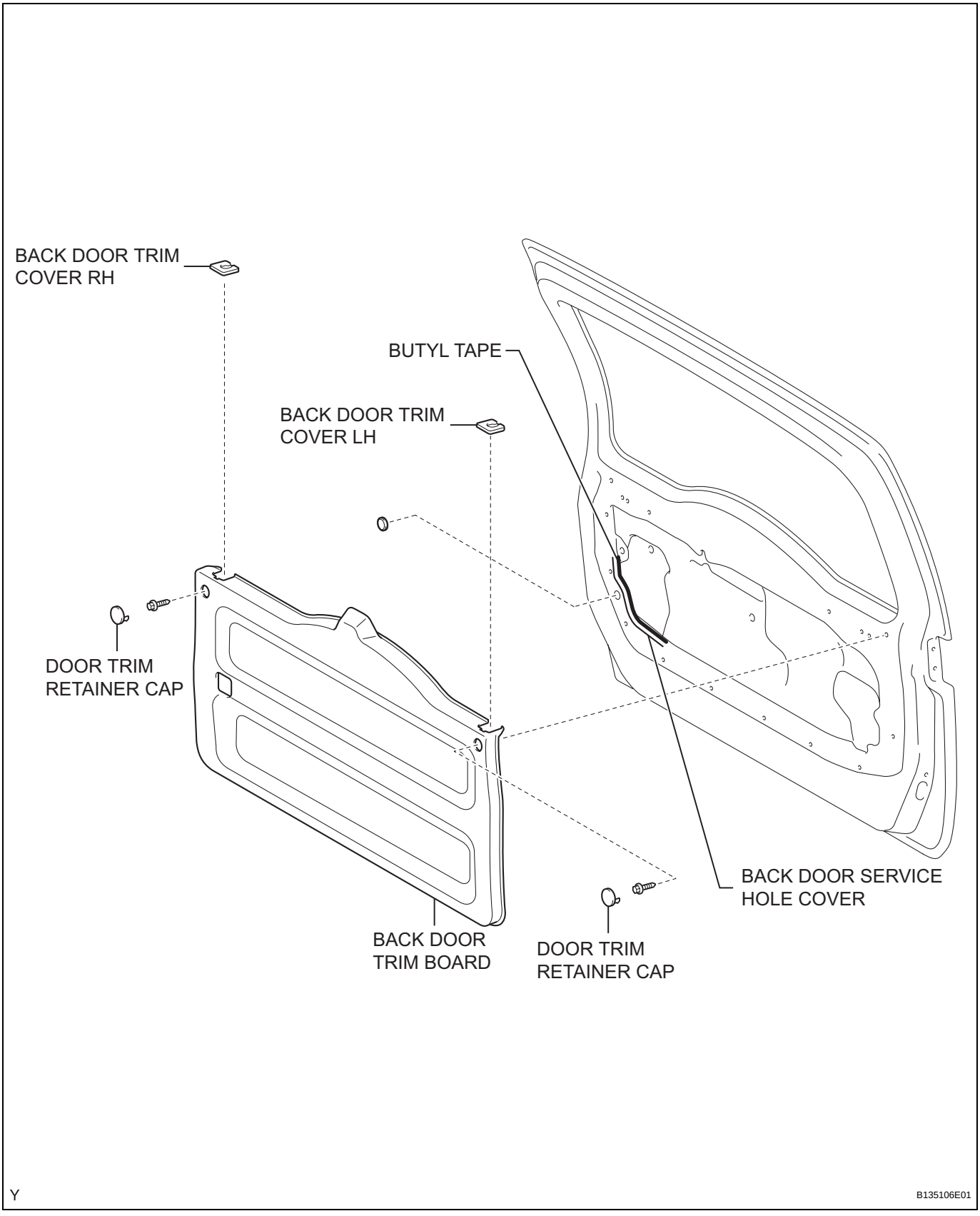

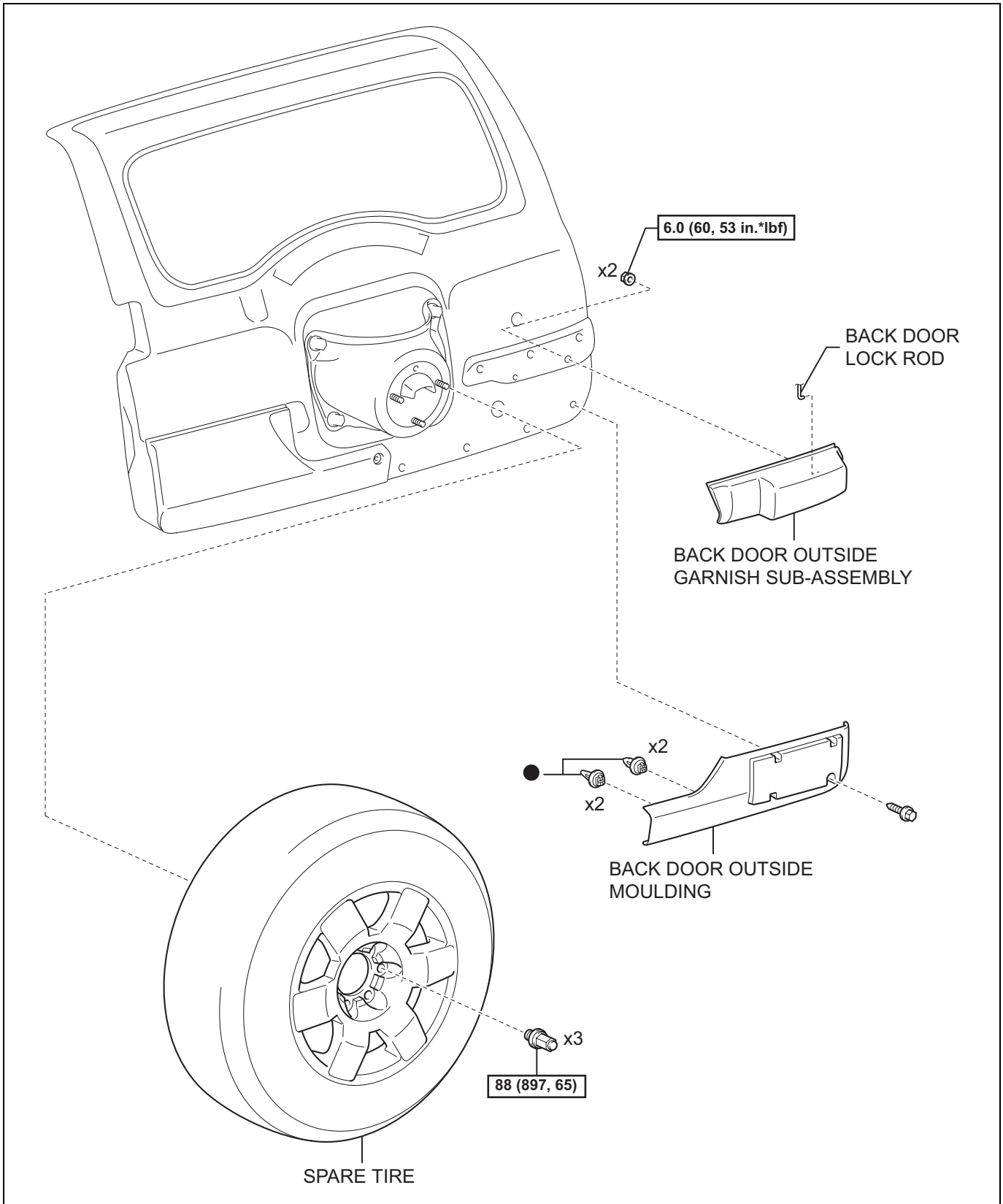

N*m (kgf*cm, ft*lbf) : Specified torque

● Non-reusable part

Y

B135107E01

ET

REMOVAL

1. **REMOVE CABLE FROM NEGATIVE BATTERY TERMINAL**
2. **REMOVE SPARE TIRE**
3. **REMOVE BACK DOOR OUTSIDE MOULDING (See page ET-71)**
4. **REMOVE BACK DOOR TRIM COVER RH (See page ED-48)**
5. **REMOVE BACK DOOR TRIM COVER LH (See page ED-48)**
6. **REMOVE BACK DOOR TRIM BOARD (See page ED-49)**
7. **REMOVE BACK DOOR SERVICE HOLE COVER**
   (a) Remove the back door service hole cover to the extent that the back door outside garnish can be removed.

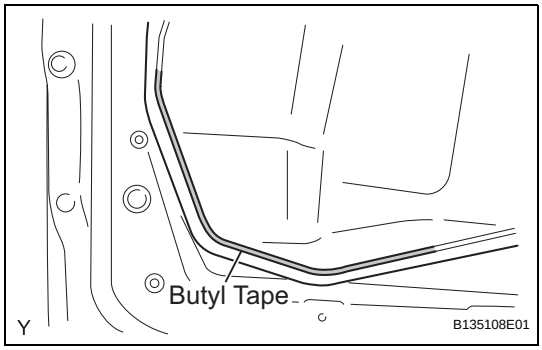

8. **REMOVE BACK DOOR OUTSIDE GARNISH SUB-ASSEMBLY**
   (a) Apply protective tape to the back door panel in the area around the back door outside garnish.

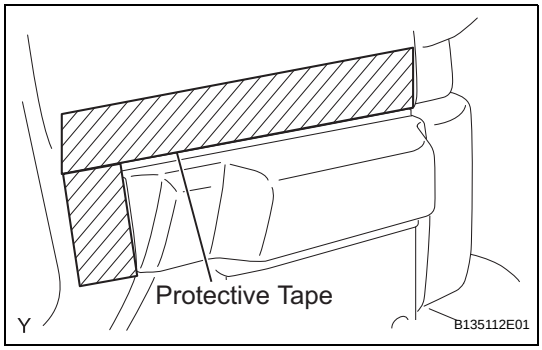

   (b) Using a clip remover, disengage the 4 claws and remove the plug hole.

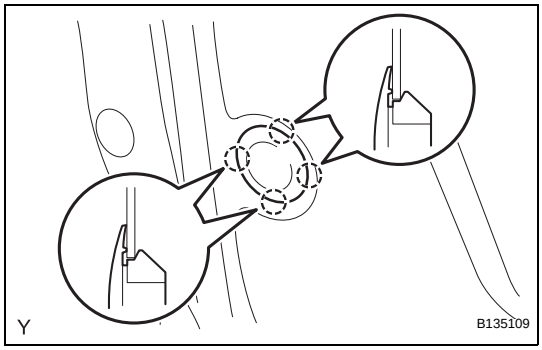

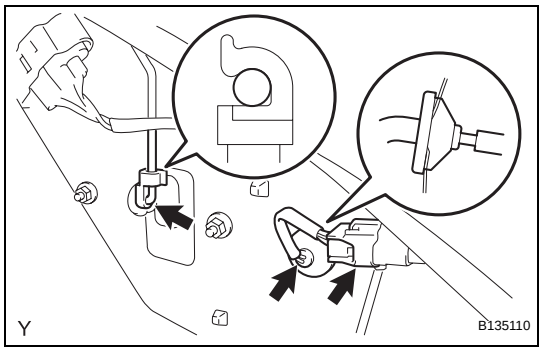

(c) Disconnect the license light connector.
(d) Disconnect the back door lock rod.

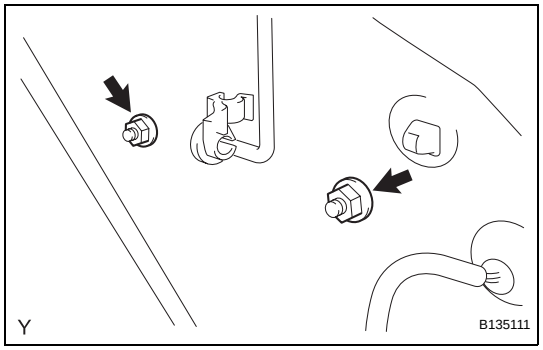

(e) Remove the 2 nuts.

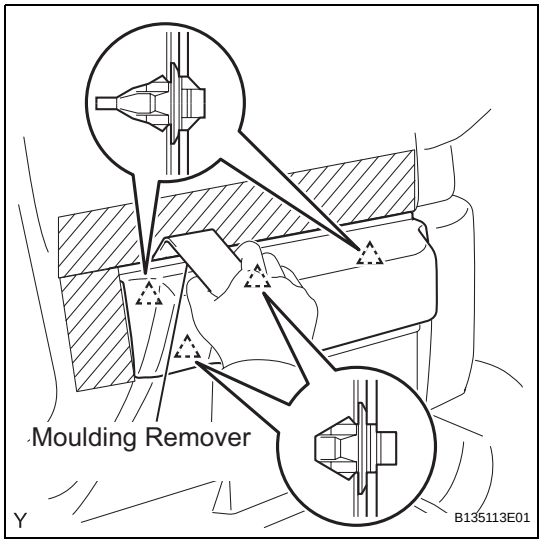

(f) Using a moulding remover, disengage the 4 clips and remove the back door outside garnish.

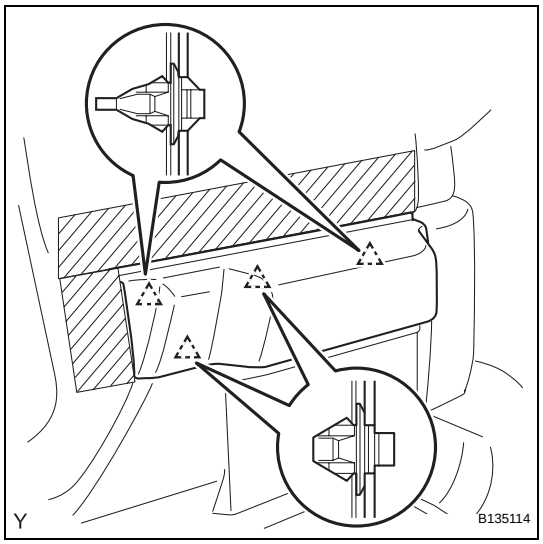

INSTALLATION

1. INSTALL BACK DOOR OUTSIDE GARNISH SUB-ASSEMBLY

(a) Engage the 4 clips and install the back door outside garnish.

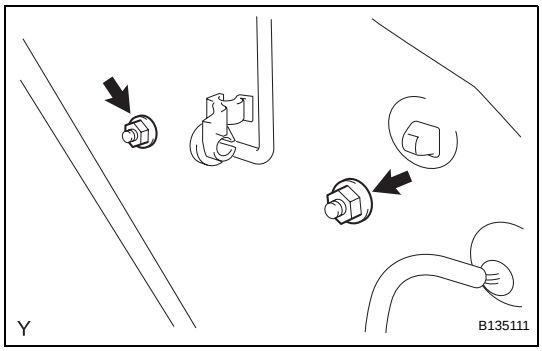

(b) Tighten the 2 nuts.
Torque: 6.0 N*m (60 kgf*cm, 53 in.*lbf)

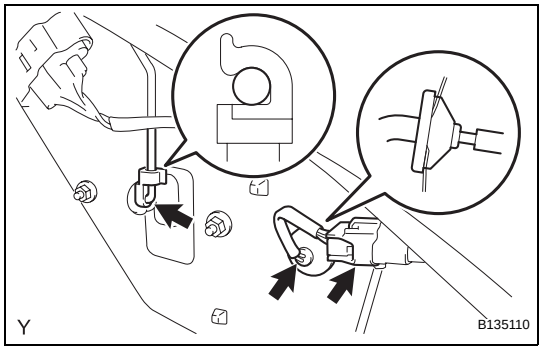

(c) Connect the back door lock rod.
(d) Connect the license light connector.

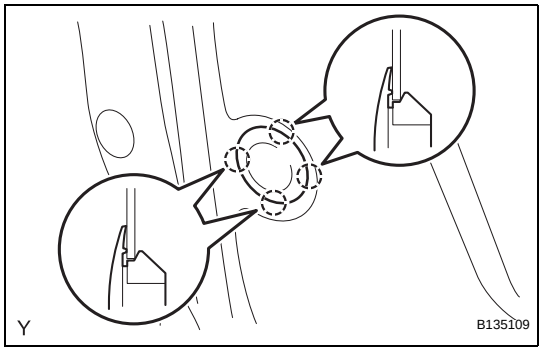

(e) Engage the 4 claws and install the plug hole.

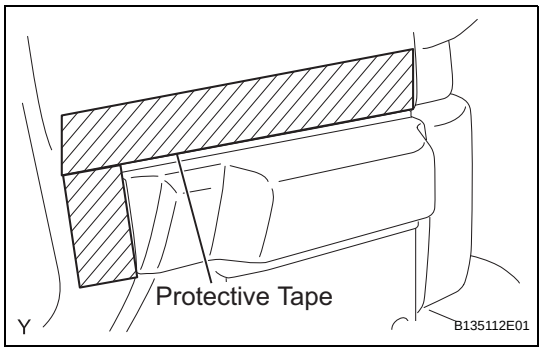

(f) Remove the protective tape.

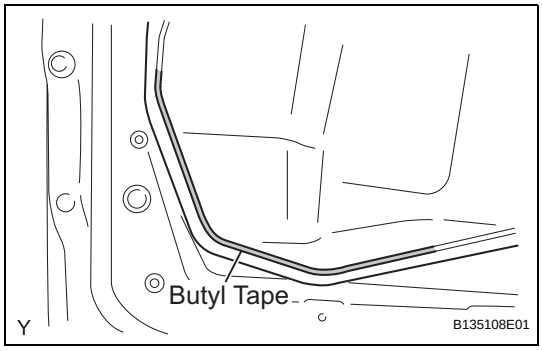

2. INSTALL BACK DOOR SERVICE HOLE COVER
(a) Install the back door service hole cover.

3. INSTALL BACK DOOR TRIM BOARD (See page ED-57)

4. INSTALL BACK DOOR TRIM COVER RH (See page ED-57)

5. INSTALL BACK DOOR TRIM COVER LH (See page ED-57)

ET

6. **INSTALL BACK DOOR OUTSIDE MOULDING (See page ET-72)**
7. **INSTALL SPARE TIRE**
   Torque: 88 N*m (897 kgf*cm, 65 ft.*lbf)
8. **CONNECT CABLE TO NEGATIVE BATTERY TERMINAL**
   Torque: 3.9 N*m (40 kgf*cm, 35 in.*lbf)

FRONT DOOR BLACK OUT TAPE

COMPONENTS

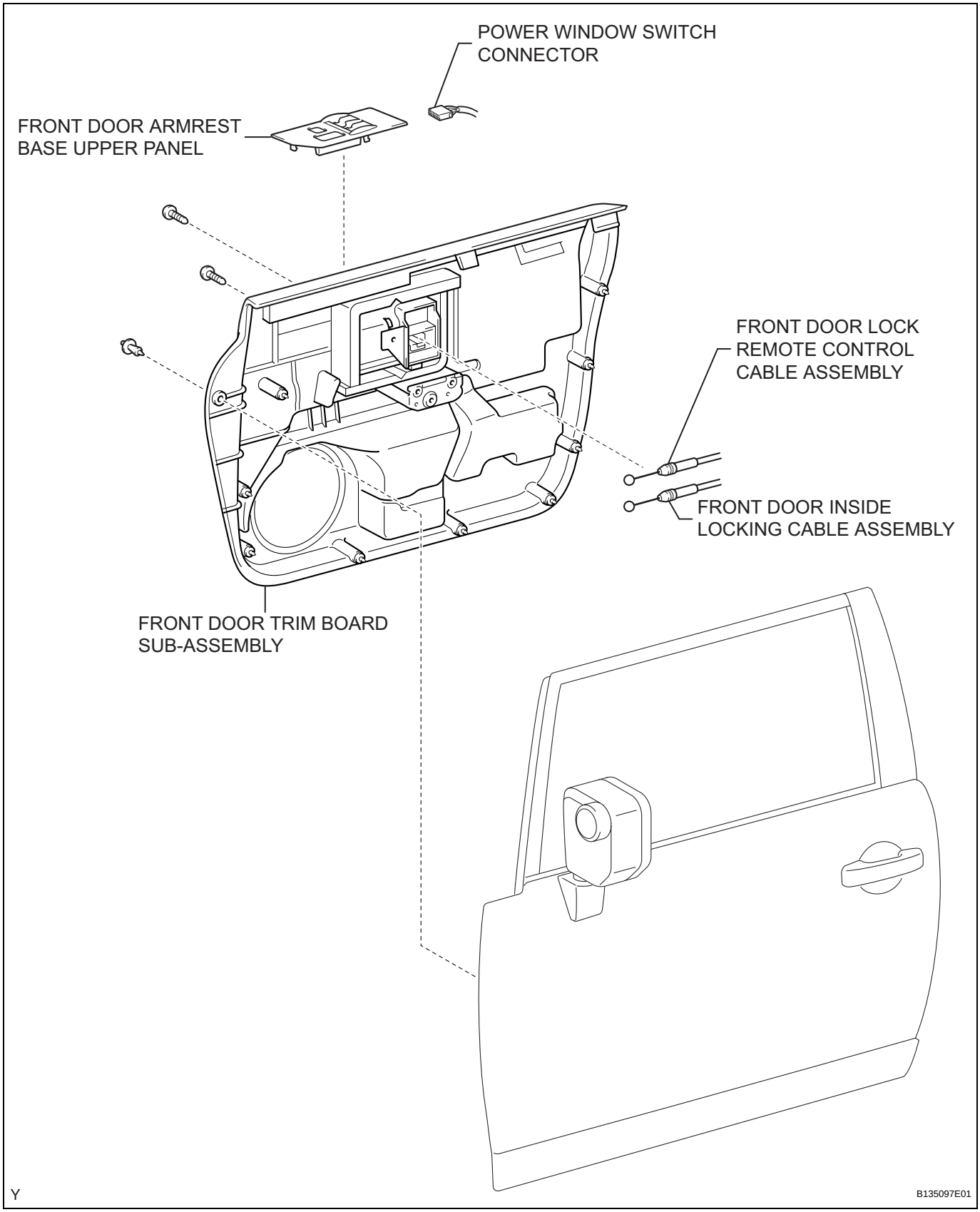

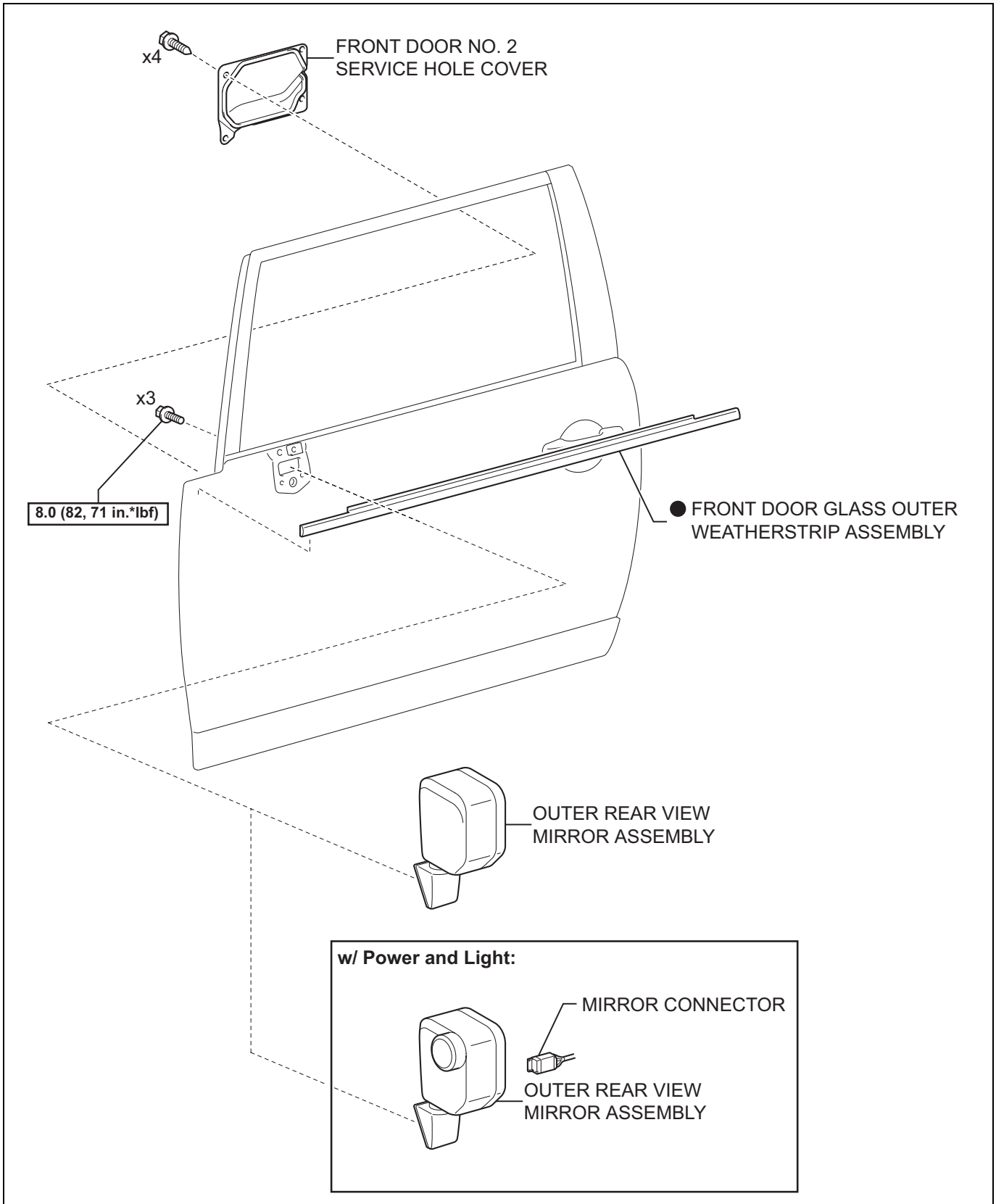

N*m (kgf*cm, ft*lbf) : Specified torque

● Non-reusable part

Y

B135098E01

ET

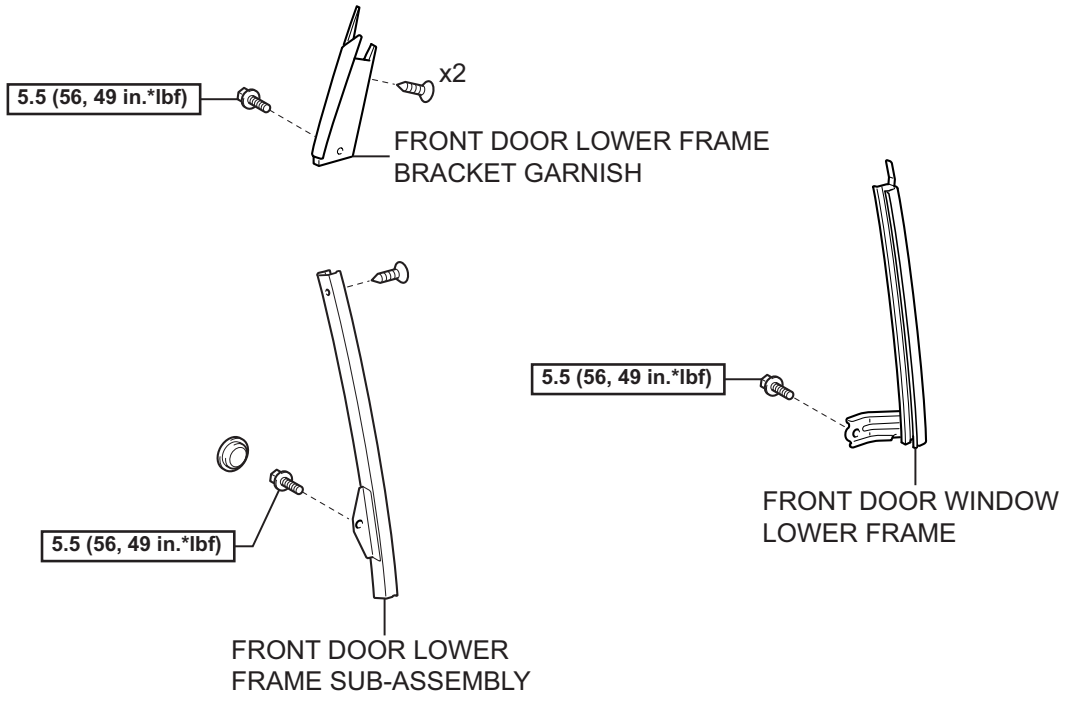

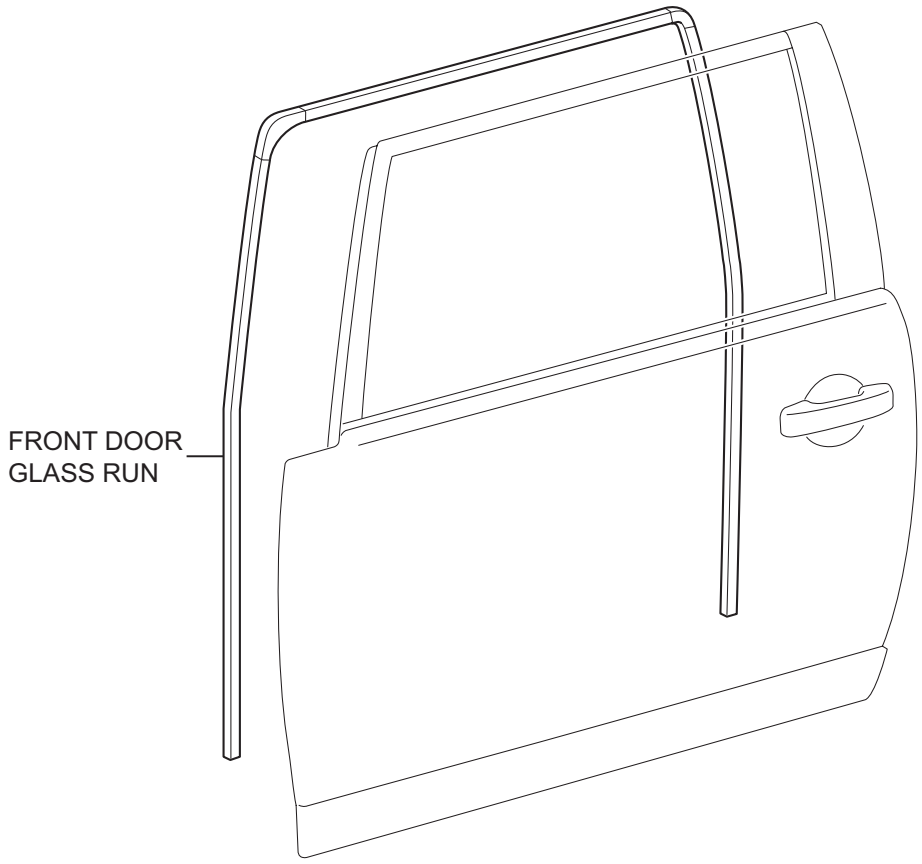

N*m (kgf*cm, ft*lbf) : Specified torque

Y

B135200E01

ET

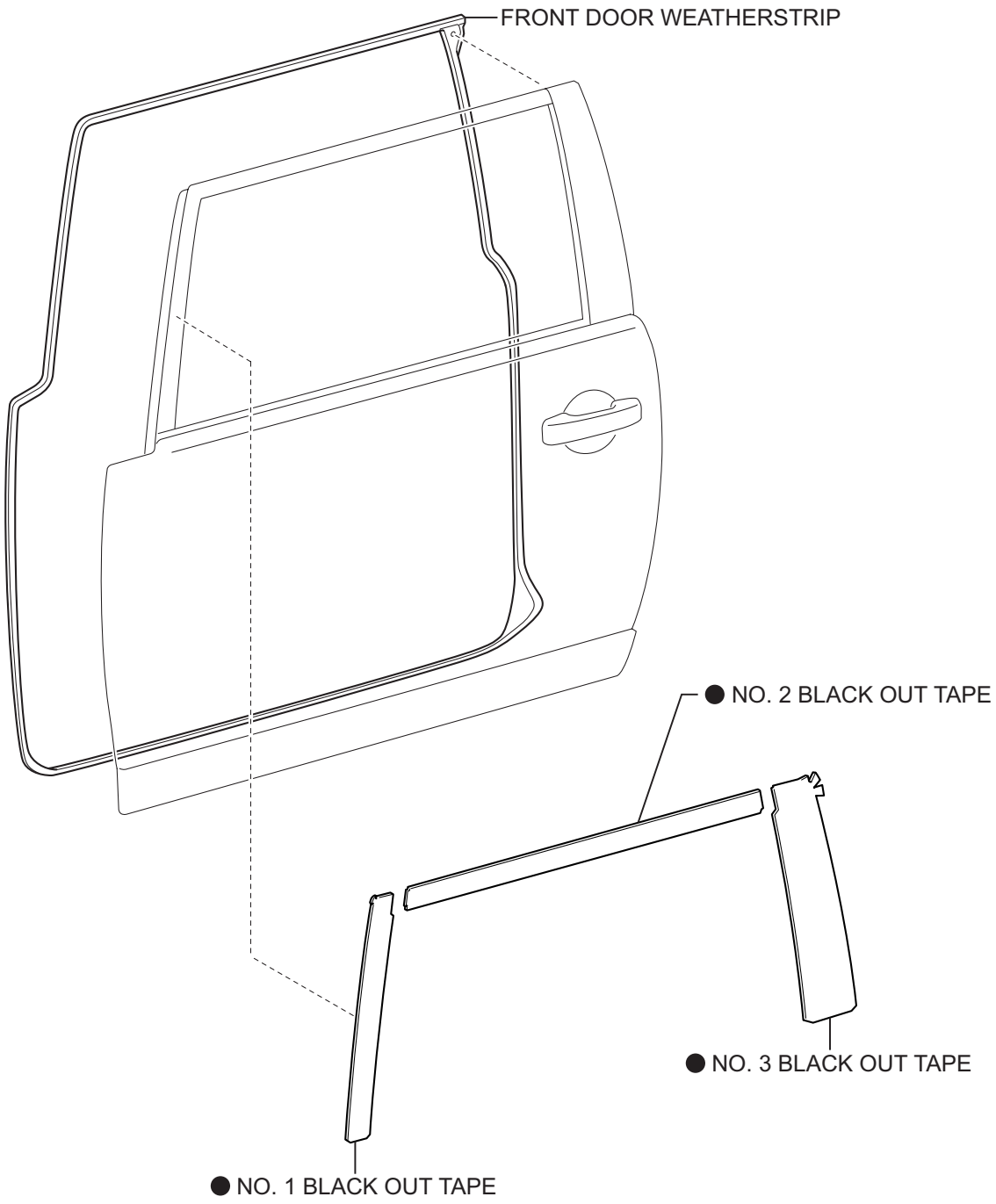

● Non-reusable part

Y

B138482E01

REMOVAL

1. **DISCONNECT CABLE FROM NEGATIVE BATTERY TERMINAL**
2. **REMOVE FRONT DOOR ARMREST BASE UPPER PANEL**
   HINT:
   Use the same procedure as for the RH side (See page ED-9).
3. **REMOVE FRONT DOOR TRIM BOARD SUB-ASSEMBLY**
   HINT:
   Use the same procedure as for the RH side (See page ED-9).
4. **REMOVE FRONT DOOR NO. 2 SERVICE HOLE COVER**
   HINT:
   Use the same procedure as for the RH side (See page ED-10).
5. **REMOVE OUTER REAR VIEW MIRROR ASSEMBLY (See page ET-39)**
6. **REMOVE FRONT DOOR GLASS OUTER WEATHERSTRIP ASSEMBLY (See page ET-39)**
7. **REMOVE FRONT DOOR WEATHERSTRIP**
   HINT:
   Use the same procedure as for the RH side (See page ED-11).
8. **REMOVE FRONT DOOR GLASS RUN**
   HINT:
   Use the same procedure as for the RH side (See page ED-12).
9. **REMOVE FRONT DOOR LOWER FRAME SUB-ASSEMBLY**
   HINT:
   Use the same procedure as for the RH side (See page ED-12).
10. **REMOVE FRONT DOOR LOWER FRAME BRACKET GARNISH**
    HINT:
    Use the same procedure as for the RH side (See page ED-12).
11. **REMOVE FRONT DOOR WINDOW LOWER FRAME**
    HINT:
    Use the same procedure as for the RH side (See page ED-12).

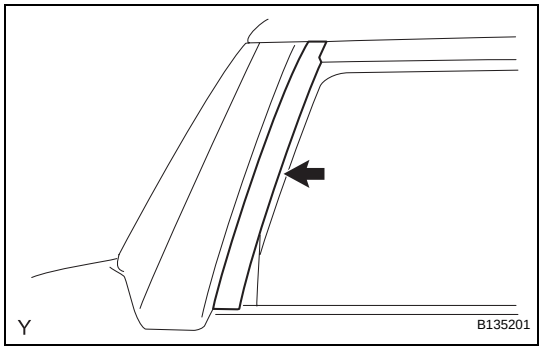

12. REMOVE NO. 1 BLACK OUT TAPE

(a) Using an infrared light, heat the No. 1 black out tape.

CAUTION:
Do not burn yourself with the heated front door panel or infrared light.

HINT:
Heat at 40 to 60°C (104 to 140°F) for 3 to 5 minutes.

(b) Lift the end portion with your nail and peel it parallel to the attachment surface.

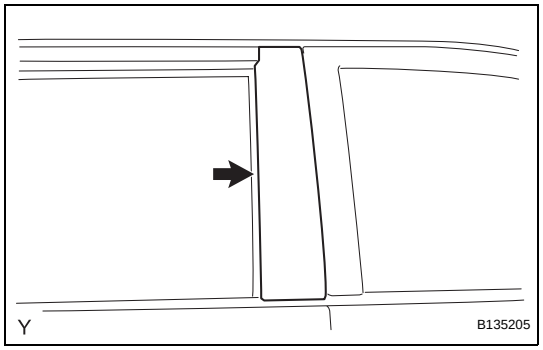

13. REMOVE NO. 3 BLACK OUT TAPE

(a) Using an infrared light, heat the No. 3 black out tape.

CAUTION:
Do not burn yourself with the heated front door panel or infrared light.

HINT:
Heat at 40 to 60°C (104 to 140°F) for 3 to 5 minutes.

(b) Lift the end portion with your nail and peel it parallel to the attachment surface.

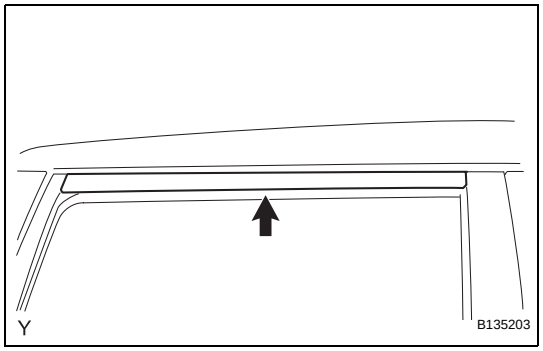

14. REMOVE NO. 2 BLACK OUT TAPE

(a) Using an infrared light, heat the No. 2 black out tape.

CAUTION:
Do not burn yourself with the heated front door panel or infrared light.

HINT:
Heat at 40 to 60°C (104 to 140°F) for 3 to 5 minutes.

(b) Lift the end portion with your nail and peel it parallel to the attachment surface.

INSTALLATION

HINT:
The procedure described below is for the LH side. Use the same procedure for both the RH and LH sides, unless otherwise specified.

1. INSTALL NO. 2 BLACK OUT TAPE

(a) Application precautions.

(1) Application temperature.

1. If the temperature is below 15°C (59°F), using an infrared light, heat the base (body attachment surface) and black out tape up to between 20 and 30°C (68 and 86°F). If the temperature is over 35°C (95°F), perform the operation after lowering the temperature to below 35°C (95°F).
   HINT:
   - The most suitable temperature for applying the black out tape is 25°C (77°F).
   - The black out tape cannot be applied correctly at low temperatures due to its stiffness and weak adhesion. The tape loses its consistency at high temperature.

(2) Pre-application procedure.

1. Any uneven twisting or dust on the base (body attachment surface) causes a defective appearance due to air being trapped under the black out tape during application. Make sure there is no uneven twisting or dust on or around the base or black out tape.
   HINT:
   When the air is dry in winter, put cardboard between the pieces of black out tape and keep it in a dry flat place.

(3) Handling.

1. Keep the black out tape in a dry flat level place because it is easily deformed.
   NOTICE:
   Do not fold, bend or expose the tape to high temperatures.

(4) Application method (Method of squeegee operation and application for general portions).
NOTICE:
- **The positioning accuracy must be within 1 mm (0.039 in.) when starting the application, otherwise, poor appearance and adhesion will result.**
- **Do not reuse black out tape that has been removed. It causes deformation and weak adhesion.**

1. In order to suppress bubble formation, slightly raise the portion not being pressed by the squeegee away from the base. Tilt the squeegee between 40 and 50° (in the pushing direction) and between 30 and 45° (in the pulling direction), and apply 20 to 30 N (2 to 3 kg, 4 to 6 lb) of pressure at a velocity of 3 to 7 cm/sec. while pushing out the air.

Pushing Direction:

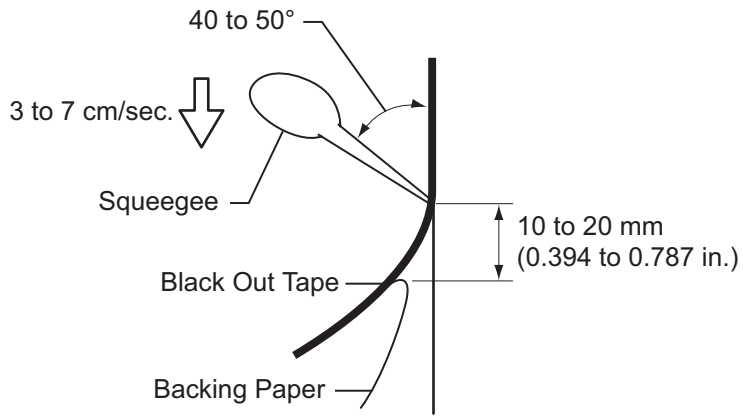

Pulling Direction:

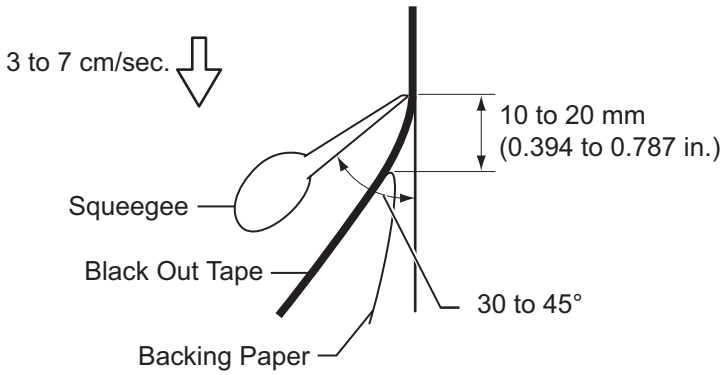

T

B114637E01

NOTICE:
While using the squeegee, do not change the speed, stop the operation or change the force of the application. Doing so could cause a streak across the surface of the black out tape called a shock line. While using the squeegee, keep the speed and force of application constant and the angle correct.

HINT:
- The squeegee can be tilted in either the pushing direction or in the pulling direction against the attachment portion.
- Perform the procedure while peeling the backing paper off the black out tape, 10 to 20 mm (0.394 to 0.787 in.) from the end of the squeegee.

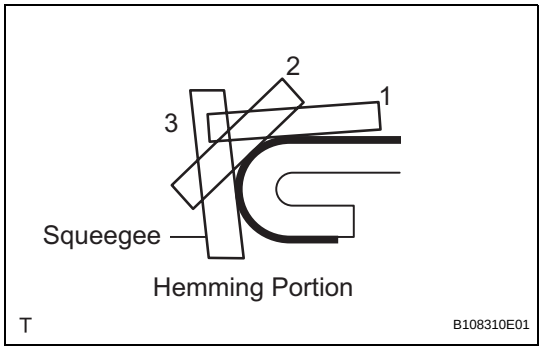

(5) Application method (Method of squeegee operation).
1. If the tape cannot be pressed in one step using the squeegee, perform the application in several steps. Using your finger or a thicker part of the squeegee, gradually apply the tape to the small R portion of the hemming portion in 2 or 3 steps.
HINT:
Peel off the backing paper at the hemming portion and apply the black out tape with your finger or a thicker part of the squeegee.

(6) Application method (Method of squeegee operation and application method for corner sections).
1. Carefully apply the tape using a finger after peeling the backing paper off the corner section.
2. In order to prevent appearance deterioration caused by the tape pin angle, turn in the tape at the corner after heating the black out tape with a dryer.

(7) Inspection.
1. Repeat the application using new black out tape.
NOTICE:
Do not use a needle to rectify bubbles in any glazed tape being applied to the outer panel, in order to make scratches virtually imperceptible.
HINT:
Use an instant adhesive if the hemming or corner portions of the black out tape are partially peeled off.

(b) Clean the attachment surface (Using an infrared light).

(1) Using an infrared light, heat any black out tape and adhesive remaining on the body.
CAUTION:
Do not burn yourself with the heated body or infrared light.

(2) Using a shop rag or piece of cloth, rub the remaining black out tape and adhesive off the body.

(3) Using a non-residue solvent, clean the attachment surface.

(c) Clean the attachment surface (Using a tape removal disc).
  (1) Set the 8 discs in the holder and insert the removal disc into an air drill or electric drill.
  NOTICE:
  Use an electric drill of which the no-load operation is 2,000 to 3,000 r/min.
  (2) Using a tape removal disc, rub the remaining black out tape and adhesive off the body.
  NOTICE:
  - **Wear protective glasses during the operation.**
  - **Rotate and operate the disc in the correct direction.**
  - **Visually check that the cutting portion is not damaged while rubbing the remaining black out tape and adhesive off the body.**
  (3) Using a non-residue solvent, clean the attachment surface.

(d) Apply new No. 2 black out tape to the positions shown in the illustration.

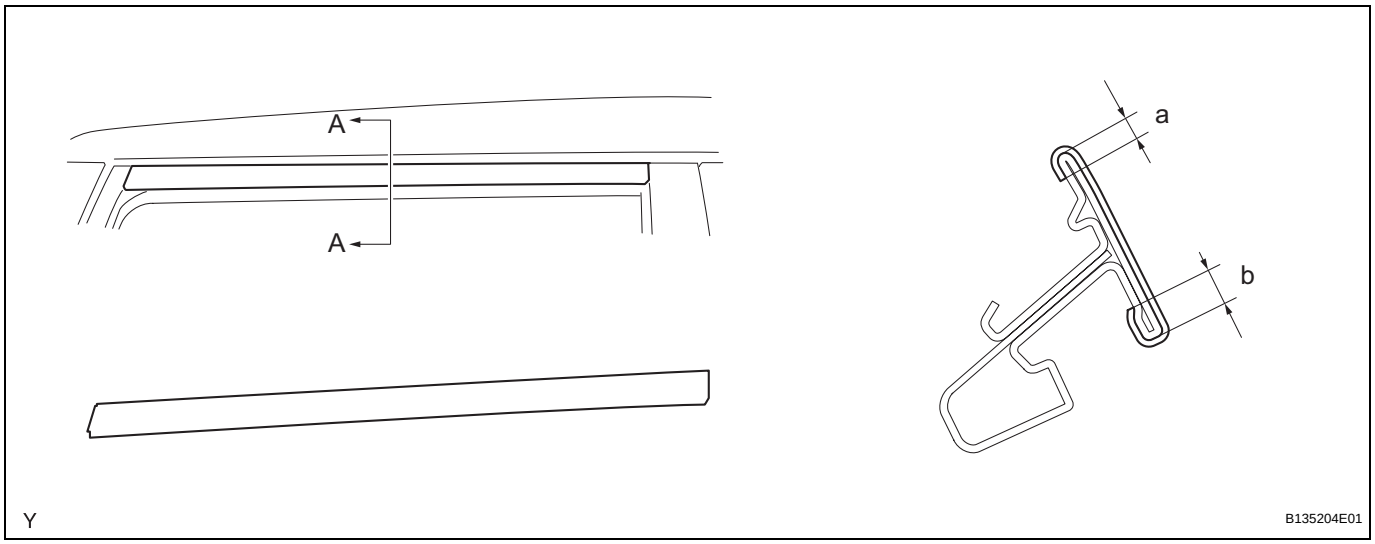

Installation position

Mark	Measurement
a	2 to 4 mm (0.079 to 0.157 in.)
b	4 to 6 mm (0.157 to 0.236 in.)

2. INSTALL NO. 3 BLACK OUT TAPE

(a) Application precautions.
HINT:
Use the same procedure as for the No. 2 black out tape.

(b) Clean the attachment surface (Using an infrared light).
HINT:
Use the same procedure as for the No. 2 black out tape.

ET

(c) Clean the attachment surface (Using a tape removal disc).
HINT:
Use the same procedure as for the No. 2 black out tape.

(d) Apply new No. 3 black out tape to the positions shown in the illustration.

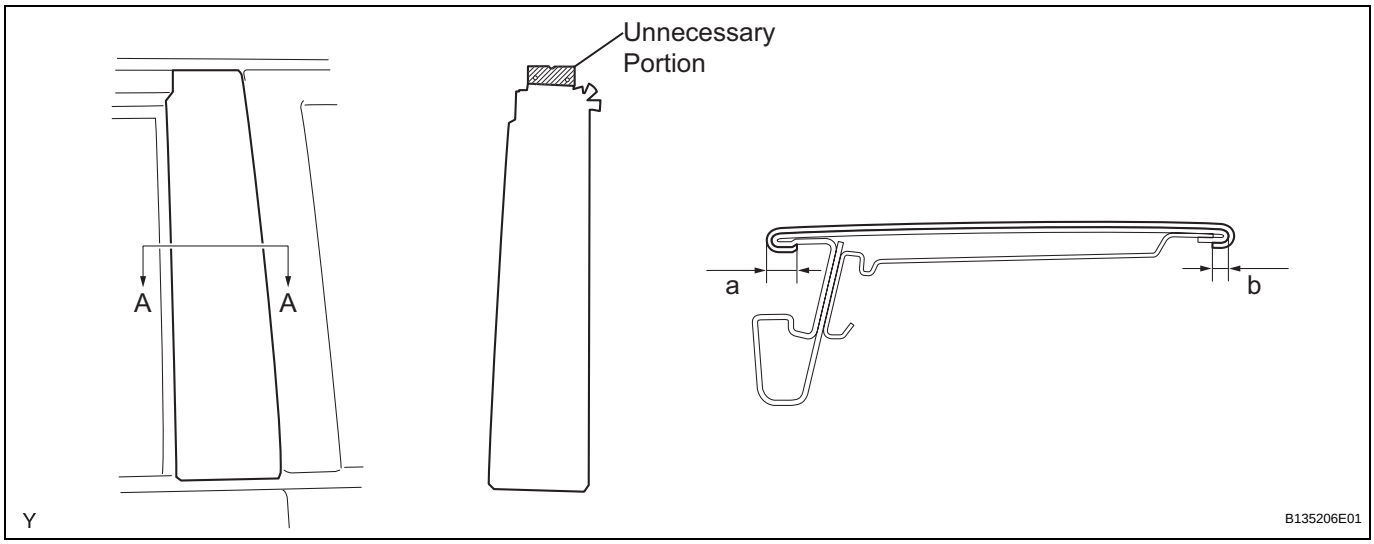

Installation position

Mark	Measurement
a	4 to 6 mm (0.157 to 0.236 in.)
b	2 to 4 mm (0.079 to 0.157 in.)

3. INSTALL NO. 1 BLACK OUT TAPE

(a) Application precautions.
HINT:
Use the same procedure as for the No. 2 black out tape.

(b) Clean the attachment surface (Using an infrared light).
HINT:
Use the same procedure as for the No. 2 black out tape.

(c) Clean the attachment surface (Using a tape removal disc).
HINT:
Use the same procedure as for the No. 2 black out tape.

(d) Apply new No. 1 black out tape to the positions shown in the illustration.

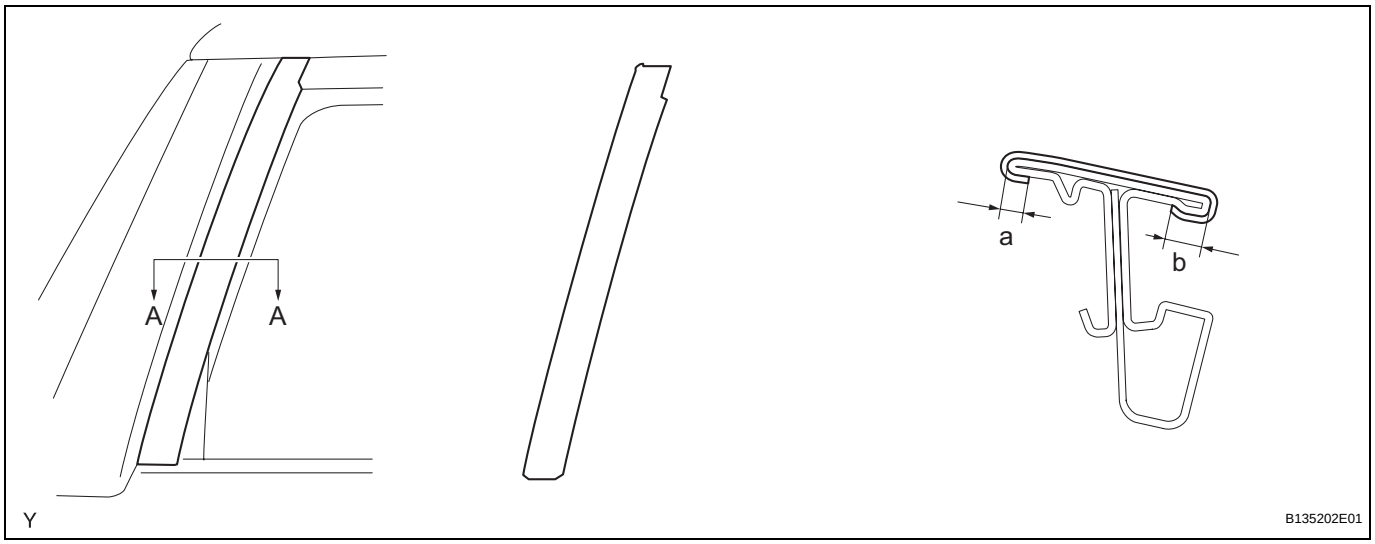

Installation position

Mark	Measurement
a	2 to 4 mm (0.079 to 0.157 in.)
b	4 to 6 mm (0.157 to 0.236 in.)

4. **INSTALL FRONT DOOR WINDOW LOWER FRAME**
HINT:
Use the same procedure as for the RH side (See page ED-21).

5. **INSTALL FRONT DOOR LOWER FRAME BRACKET GARNISH**
HINT:
Use the same procedure as for the RH side (See page ED-21).

6. **INSTALL FRONT DOOR LOWER FRAME SUB-ASSEMBLY**
HINT:
Use the same procedure as for the RH side (See page ED-21).

7. **INSTALL FRONT DOOR GLASS RUN**
HINT:
Use the same procedure as for the RH side (See page ED-21).

8. **INSTALL FRONT DOOR WEATHERSTRIP**
HINT:
Use the same procedure as for the RH side (See page ED-22).

9. **INSTALL FRONT DOOR GLASS OUTER WEATHERSTRIP ASSEMBLY (See page ET-40)**

10. **INSTALL OUTER REAR VIEW MIRROR ASSEMBLY (See page ET-41)**

11. **INSTALL FRONT DOOR NO. 2 SERVICE HOLE COVER**
HINT:
Use the same procedure as for the RH side (See page ED-24).

12. **INSTALL FRONT DOOR TRIM BOARD SUB-ASSEMBLY**
HINT:
Use the same procedure as for the RH side (See page ED-24).

13. **INSTALL FRONT DOOR ARMREST BASE UPPER PANEL**
HINT:
Use the same procedure as for the RH side (See page ED-25).

14. **CONNECT CABLE TO NEGATIVE BATTERY TERMINAL**
Torque: 3.9 N*m (40 kgf*cm, 35 in.*lbf)

ACCESS DOOR BLACK OUT TAPE

COMPONENTS

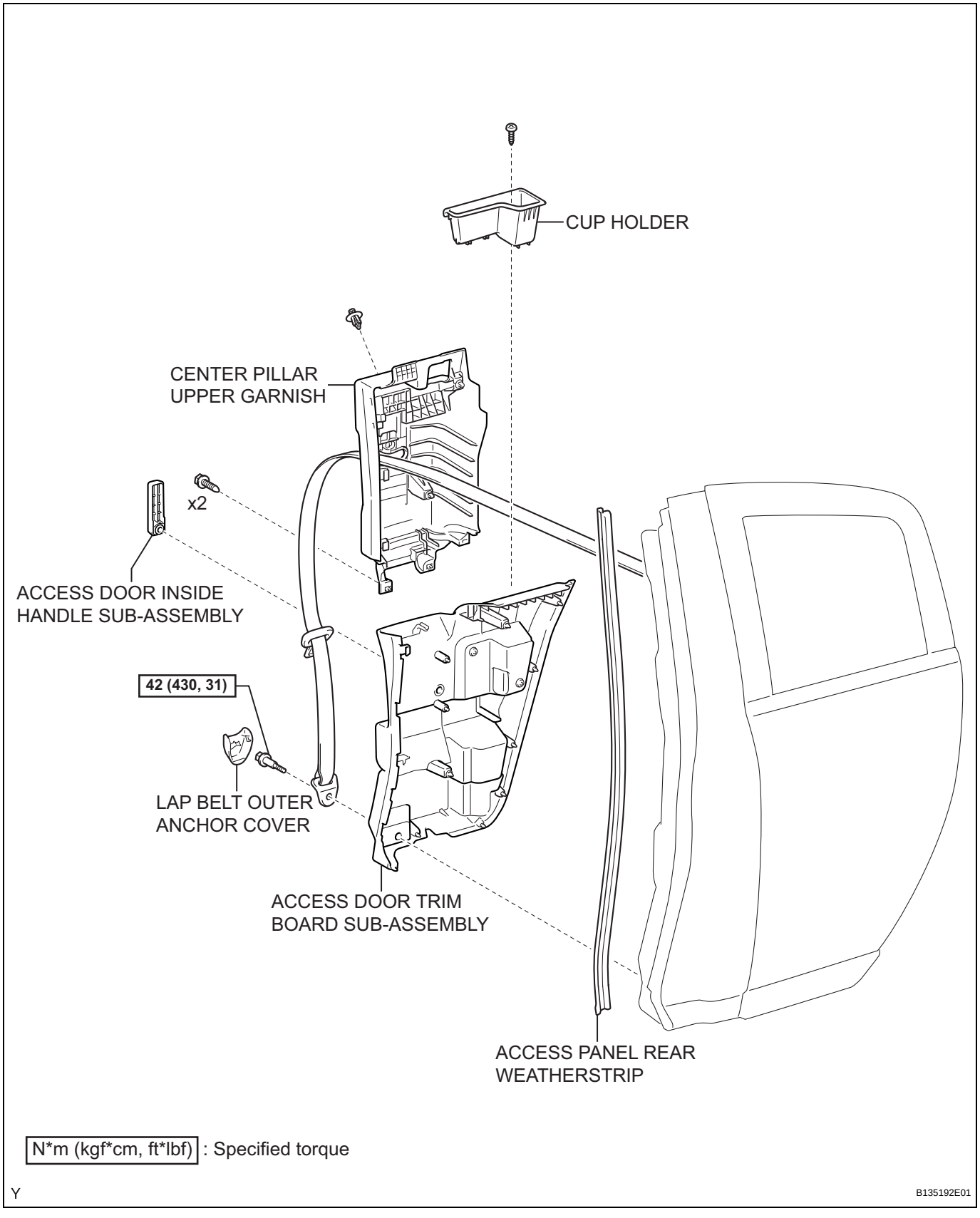

ET

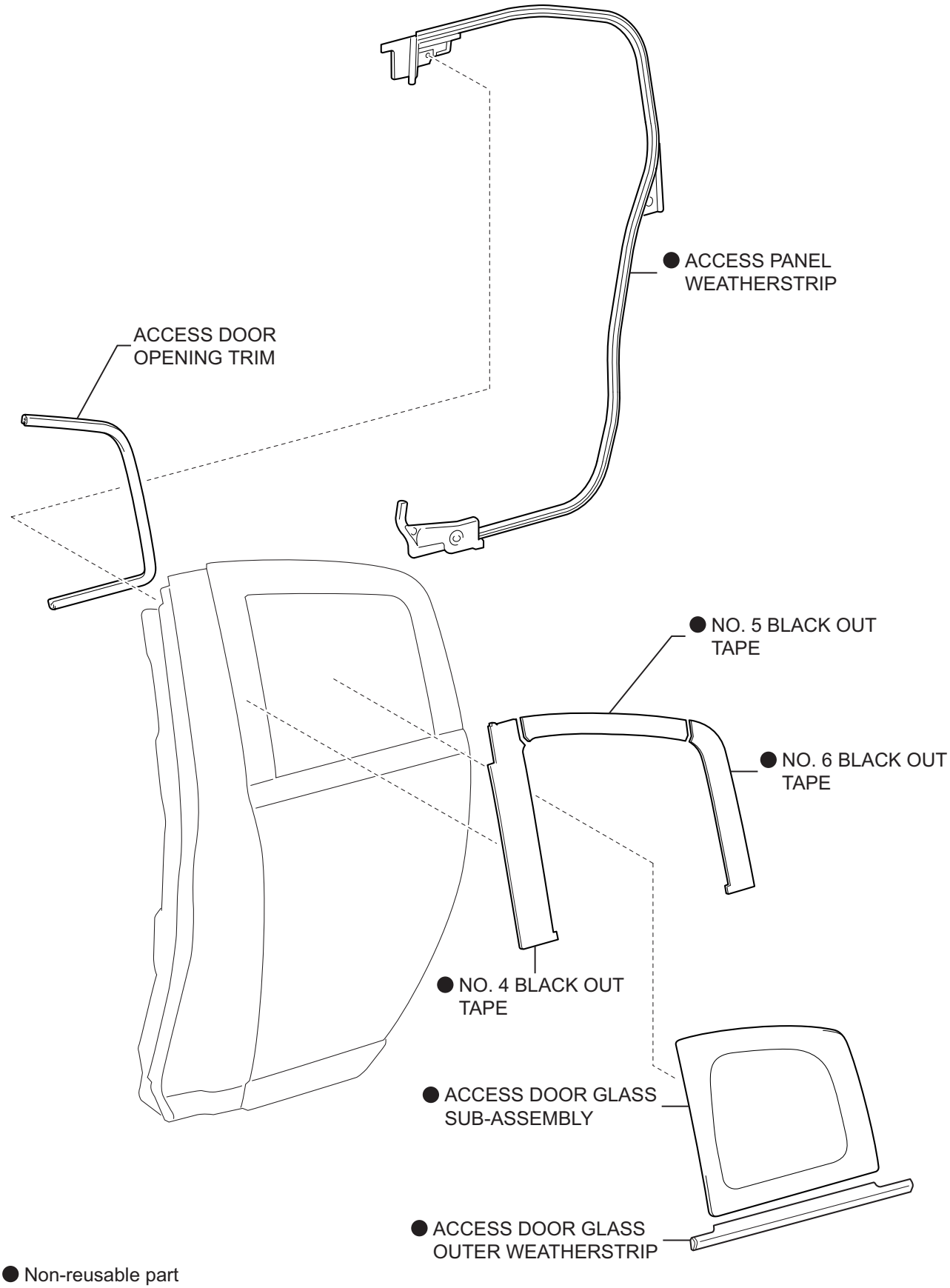
● ACCESS PANEL WEATHERSTRIP
ACCESS DOOR OPENING TRIM
● NO. 5 BLACK OUT TAPE
● NO. 6 BLACK OUT TAPE
● NO. 4 BLACK OUT TAPE
● ACCESS DOOR GLASS SUB-ASSEMBLY
● ACCESS DOOR GLASS OUTER WEATHERSTRIP
● Non-reusable part
Y
B135193E01

REMOVAL

HINT:
The procedure described below is for the LH side. Use the same procedure for both the RH and LH sides, unless otherwise specified.

1. **REMOVE ACCESS PANEL REAR WEATHERSTRIP**
   HINT:
   Use the same procedure as for the RH side (See page ED-29).
2. **REMOVE LAP BELT OUTER ANCHOR COVER**
   HINT:
   Use the same procedure as for the RH side (See page ED-29).
3. **REMOVE ACCESS DOOR INSIDE HANDLE SUB-ASSEMBLY**
   HINT:
   Use the same procedure as for the RH side (See page ED-29).
4. **REMOVE CUP HOLDER**
   HINT:
   Use the same procedure as for the RH side (See page ED-29).
5. **REMOVE ACCESS DOOR TRIM BOARD SUB-ASSEMBLY**
   HINT:
   Use the same procedure as for the RH side (See page ED-30).
6. **REMOVE CENTER PILLAR UPPER GARNISH**
   HINT:
   Use the same procedure as for the RH side (See page ED-30).
7. **REMOVE ACCESS DOOR OPENING TRIM**
   HINT:
   Use the same procedure as for the RH side (See page ED-32).
8. **REMOVE ACCESS PANEL WEATHERSTRIP**
   HINT:
   Use the same procedure as for the RH side (See page ED-32).
9. **REMOVE ACCESS DOOR GLASS OUTER WEATHERSTRIP (See page ET-43)**
10. **REMOVE ACCESS DOOR GLASS SUB-ASSEMBLY (See page WS-58)**

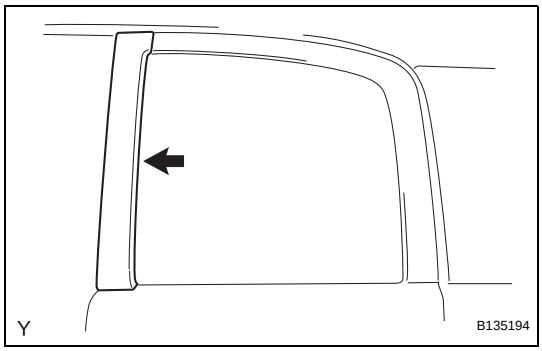

11. REMOVE NO. 4 BLACK OUT TAPE

(a) Using an infrared light, heat the No. 4 black out tape.

CAUTION:
Do not burn yourself with the heated front door panel or infrared light.

HINT:
Heat at 40 to 60°C (104 to 140°F) for 3 to 5 minutes.

(b) Lift the end portion with your nail and peel it parallel to the attachment surface.

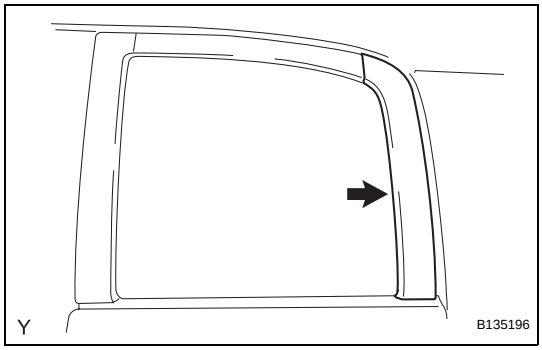

12. REMOVE NO. 6 BLACK OUT TAPE

(a) Using an infrared light, heat the No. 6 black out tape.

CAUTION:
Do not burn yourself with the heated front door panel or infrared light.

HINT:
Heat at 40 to 60°C (104 to 140°F) for 3 to 5 minutes.

(b) Lift the end portion with your nail and peel it parallel to the attachment surface.

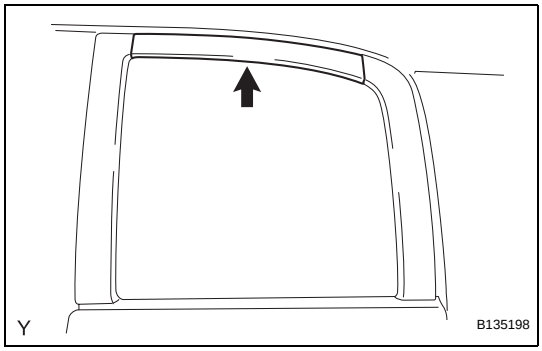

13. REMOVE NO. 5 BLACK OUT TAPE

(a) Using an infrared light, heat the No. 6 black out tape.

CAUTION:
Do not burn yourself with the heated front door panel or infrared light.

HINT:
Heat at 40 to 60°C (104 to 140°F) for 3 to 5 minutes.

(b) Lift the end portion with your nail and peel it parallel to the attachment surface.

INSTALLATION

HINT:
The procedure described below is for the LH side. Use the same procedure for both the RH and LH sides, unless otherwise specified.

1. INSTALL NO. 5 BLACK OUT TAPE

(a) Application precautions (See page ET-99).
(b) Clean the attachment surface (Using an infrared light) (See page ET-99).
(c) Clean the attachment surface (Using a tape removal disc) (See page ET-99).
(d) Apply new No. 5 black out tape to the positions shown in the illustration.

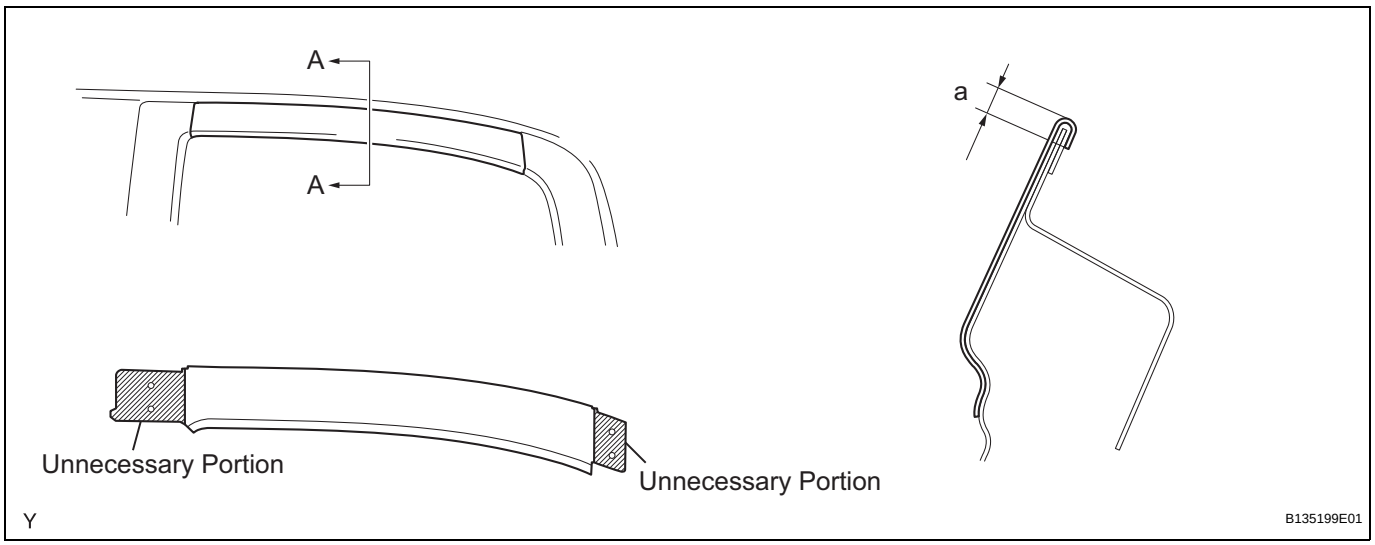

Installation position:

Mark	Measurement
a	2 to 4 mm (0.079 to 0.157 in.)

2. INSTALL NO. 6 BLACK OUT TAPE

(a) Application precautions (See page ET-99).
(b) Clean the attachment surface (Using an infrared light) (See page ET-99).
(c) Clean the attachment surface (Using a tape removal disc) (See page ET-99).

(d) Apply new No. 6 black out tape to the positions shown in the illustration.

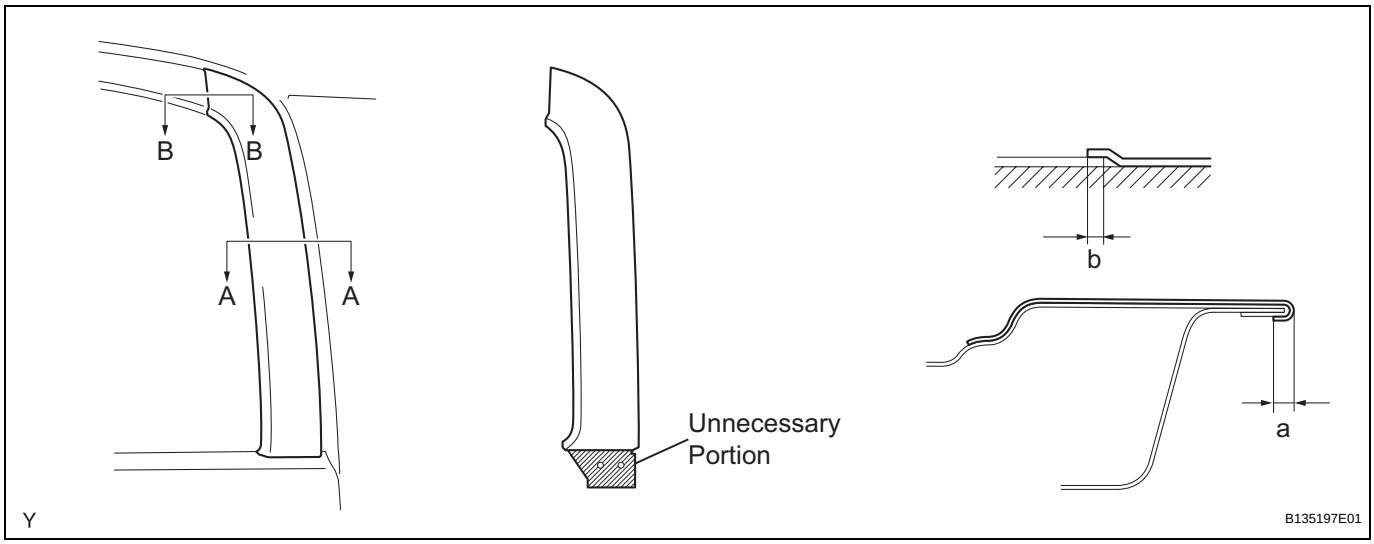

Installation position:

Mark	Measurement
a	2 to 4 mm (0.079 to 0.157 in.)
b	2 mm (0.079 in.)

3. INSTALL NO. 4 BLACK OUT TAPE

(a) Application precautions (See page ET-99).
(b) Clean the attachment surface (Using an infrared light) (See page ET-99).
(c) Clean the attachment surface (Using a tape removal disc) (See page ET-99).
(d) Apply new No. 4 black out tape to the positions shown in the illustration.

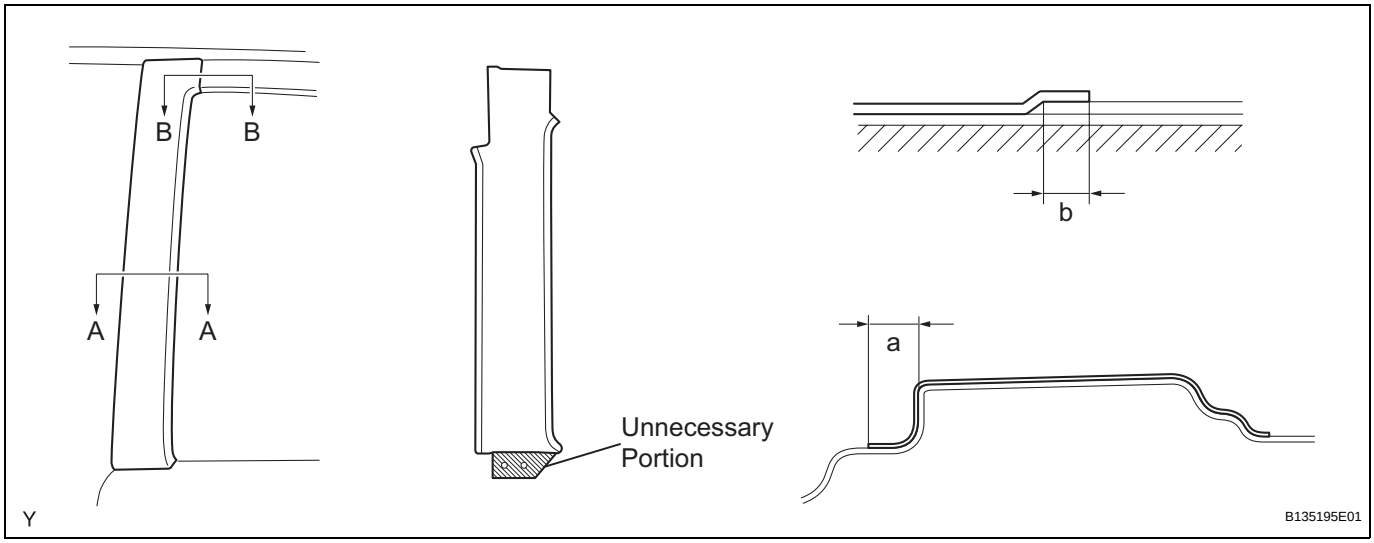

Installation position:

Mark	Measurement
a	10 mm (0.394 in.)
b	2 mm (0.079 in.)

4. INSTALL ACCESS DOOR GLASS SUB-ASSEMBLY (See page WS-59)

ET

5. **INSTALL ACCESS DOOR GLASS OUTER WEATHERSTRIP (See page ET-43)**

6. **INSTALL ACCESS PANEL WEATHERSTRIP**
   HINT:
   Use the same procedure as for the RH side (See page ED-38).

7. **INSTALL ACCESS DOOR OPENING TRIM**
   HINT:
   Use the same procedure as for the RH side (See page ED-39).

8. **INSTALL CENTER PILLAR UPPER GARNISH**
   HINT:
   Use the same procedure as for the RH side (See page ED-40).

9. **INSTALL ACCESS DOOR TRIM BOARD SUB-ASSEMBLY**
   HINT:
   Use the same procedure as for the RH side (See page ED-41).

10. **INSTALL CUP HOLDER**
    HINT:
    Use the same procedure as for the RH side (See page ED-41).

11. **INSTALL ACCESS DOOR INSIDE HANDLE SUB-ASSEMBLY**
    HINT:
    Use the same procedure as for the RH side (See page ED-41).

12. **INSTALL LAP BELT OUTER ANCHOR COVER**
    HINT:
    Use the same procedure as for the RH side (See page ED-42).

13. **INSTALL ACCESS PANEL REAR WEATHERSTRIP**
    HINT:
    Use the same procedure as for the RH side (See page ED-42).

FUEL SYSTEM

PRECAUTION

1. BEFORE WORKING ON FUEL SYSTEM

(a) Before working on the fuel system, disconnect the cable from the negative battery terminal.

(b) Do not work on the fuel system near naked flames. Never smoke during the work.

(c) Keep rubber and leather parts away from gasoline.

2. DISCHARGE FUEL SYSTEM PRESSURE

CAUTION:

- **DISCHARGE FUEL SYSTEM PRESSURE procedures must be performed before disconnecting any part of the fuel system.**
- **As some pressure remains in the fuel line even after taking precautions to prevent gasoline spillage, use a shop rag or piece of cloth to prevent gasoline splashes when disconnecting the fuel line.**

(a) Disconnect the cable from the negative battery terminal.

(b) Remove the circuit opening relay (see page ES-443).

(c) Connect the cable to the battery negative terminal.
Torque: 3.9 N*m (40 kgf*cm, 35 in.*lbf)

(d) Start the engine.

(e) Turn the ignition switch to ON after the engine stops.
HINT:
DTC P0171 (system too lean (Bank 1)) or DTC P0174 (system too learn (Bank 2)) may be set.

(f) Crank the engine again and check that the engine stops.

(g) Remove the fuel tank cap and discharge the pressure in the fuel tank completely.

(h) Install the circuit opening relay (see page ES-443).

3. FUEL SYSTEM

(a) When disconnecting the high-pressure fuel line, a large amount of gasoline will splash. So take the following precautions.

(1) Discharge the fuel system pressure.

(2) Disconnect the fuel tank main tube (see page FU-42).

(3) Drain the fuel remaining in the fuel tank main tube.

(4) Cover the disconnected fuel tank main tube (fuel tube joint and fuel tube connector) with a vinyl bag to prevent damage and the intrusion of foreign objects.

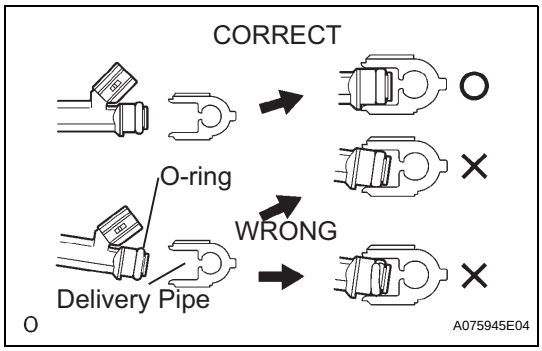

(b) Take the following precautions when installing the fuel injector.
(1) Do not reuse the O-ring.
(2) Do not damage a new O-ring when installing it into the fuel injector.
(3) Before installing a new O-ring, apply gasoline or spindle oil.
NOTICE:
Do not use engine oil, gear oil or brake oil.

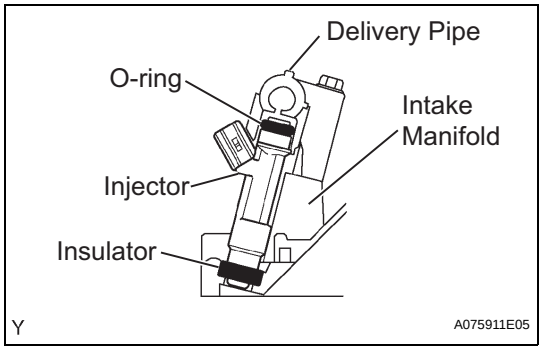

(4) Install the fuel injector into the fuel delivery pipe and cylinder head as illustrated.
NOTICE:
Apply gasoline or spindle oil to the contact surface of the fuel delivery pipe and fuel injector before installing the fuel injector.

FU

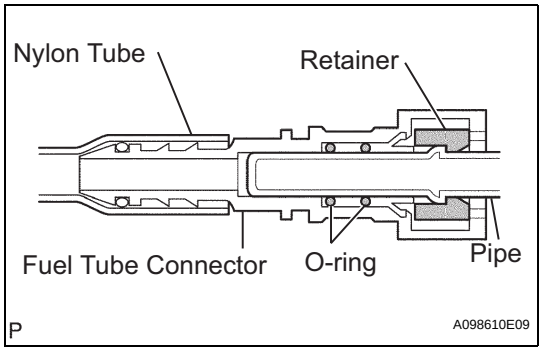

(c) Take the following precautions when disconnecting the fuel tube connector.
HINT:
The structure of the fuel tube connector is as shown in the illustration.
(1) Check the fuel tube connector and pipe for dirt and mud before removing the fuel tube connector.
If dirty, wipe it with a shop rag or piece of cloth.

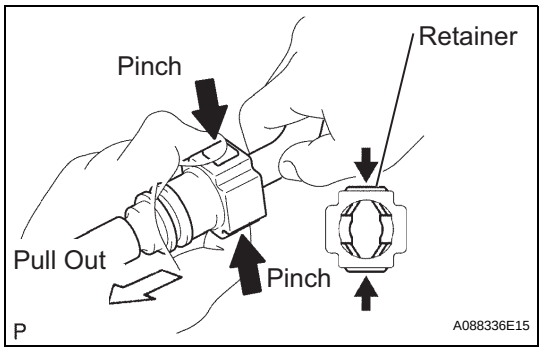

(2) Pinch the retainer as illustrated, and pull the fuel tube connector out of the pipe.

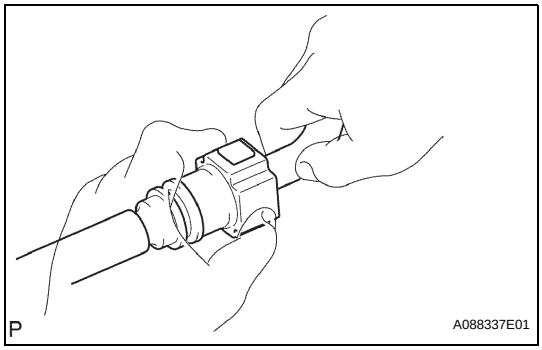

(3) If the fuel tube connector and pipe are stuck, pinch the pipe, then push and pull the fuel tube connector to release and disconnect it.
NOTICE:
Never use any tools.
(4) After removing the fuel tube, check the sealing surface of the pipe for dirt and mud.
If dirty, wipe it with a shop rag or piece of cloth.
(5) Cover the disconnected fuel tube connector and pipe with a vinyl bag to prevent damage and the intrusion of foreign objects.

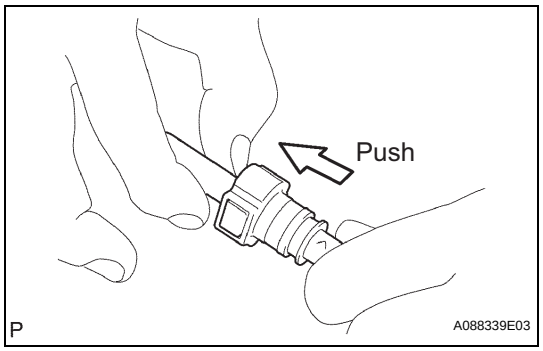

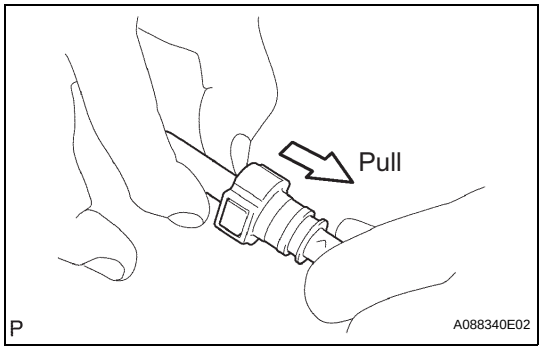

(d) Take the following precautions when installing the fuel tube connector.
(1) Align the fuel tube connector with the pipe, then push in the fuel tube connector until the retainer makes a "click" sound.

(2) After connecting the fuel tube connector, check that the fuel tube connector and pipe are securely connected by pulling them.

PARTS LOCATION

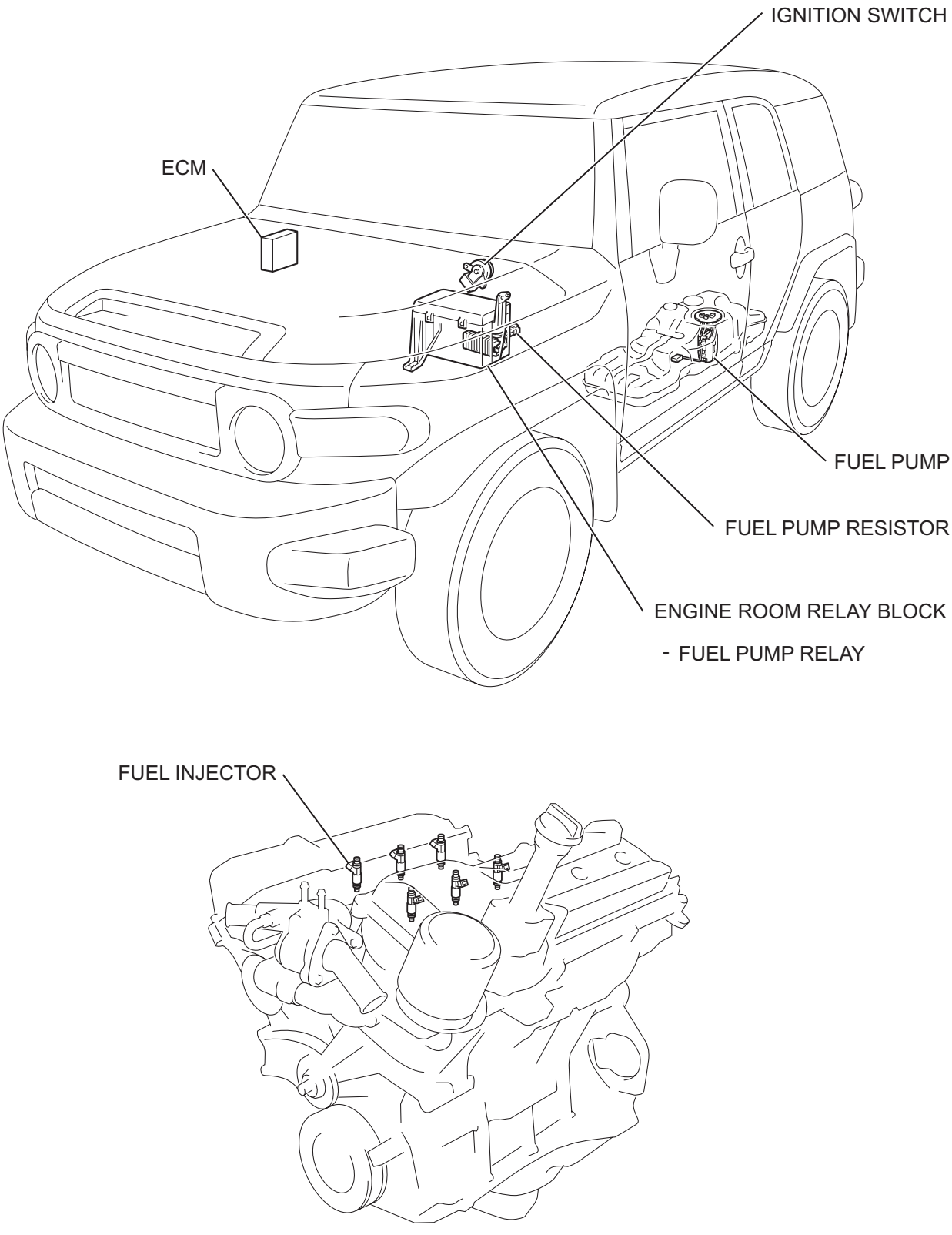

SYSTEM DIAGRAM

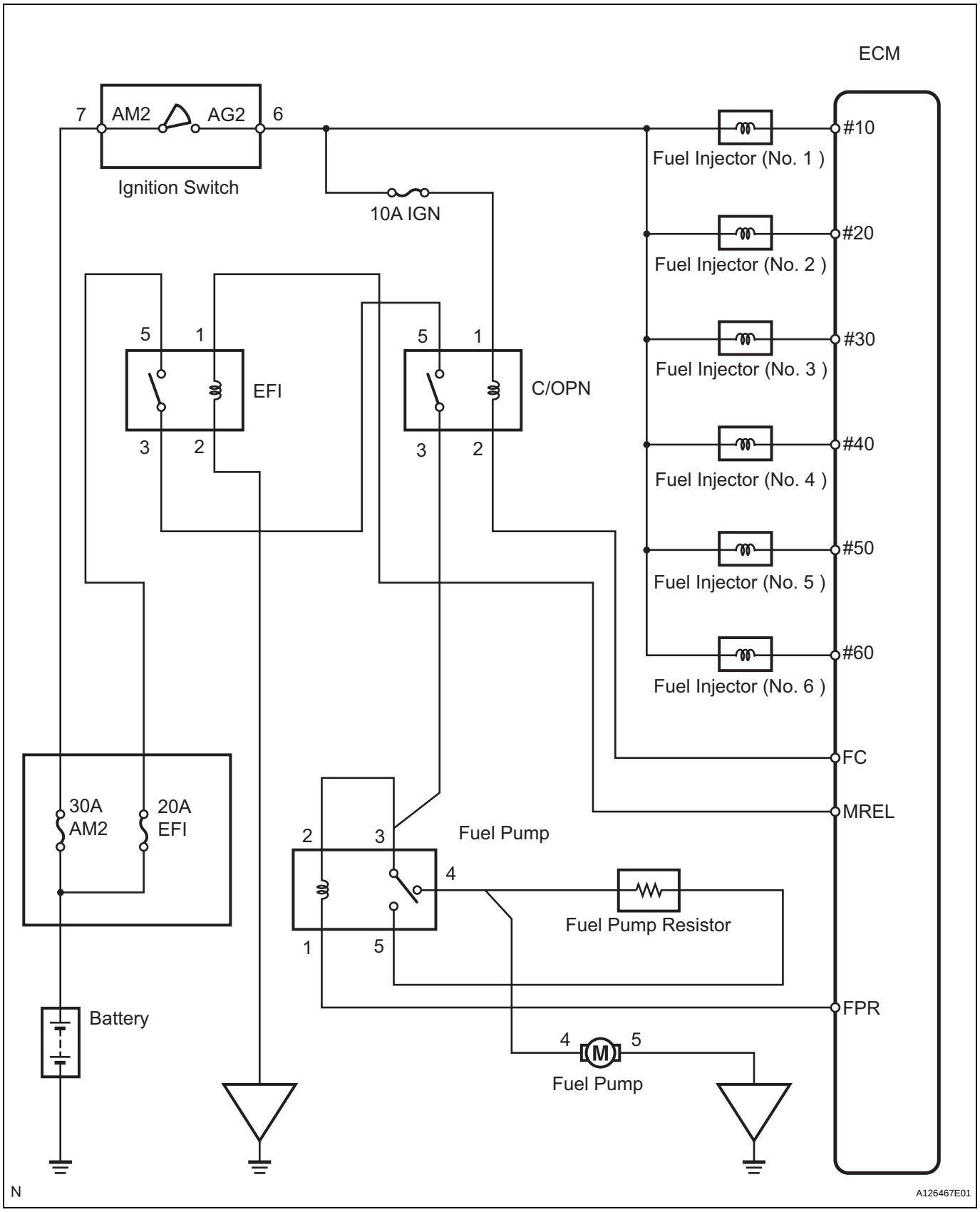

FU

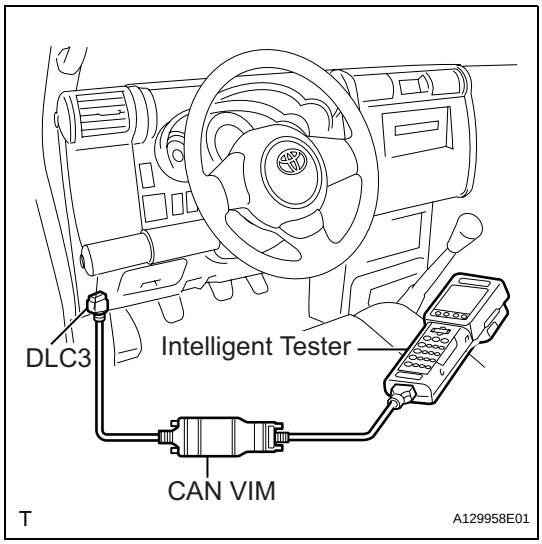

ON-VEHICLE INSPECTION

1. CHECK FUEL PUMP

(a) Connect the intelligent tester to the DLC3.
(b) Turn the ignition switch ON.
NOTICE:
Do not start the engine.
(c) Turn the intelligent tester ON.
(d) Select the following menu items: DIAGNOSIS / ENHANCED OBD II / ACTIVE TEST / FUEL PUMP / SPD.
(e) Check the fuel operation by operating it with the intelligent tester.
If the fuel pump does not operate, replace the fuel pump.

2. CHECK FUEL PRESSURE

(a) Discharge the fuel pressure system (see page FU-1).
(b) Using a voltmeter, measure the battery voltage.
Standard voltage:
11 to 14 V
(c) Disconnect the negative battery terminal.
(d) Disengage the fuel pipe clamp.
(e) Disconnect the fuel pipe No. 1.
(f) Install SST and the fuel tube connector onto the vehicle.
(g) Wipe off any spilt gasoline.
(h) Connect the cable to the negative battery terminal.
Torque: 3.9 N*m (40 kgf*cm, 35 in.*lbf)

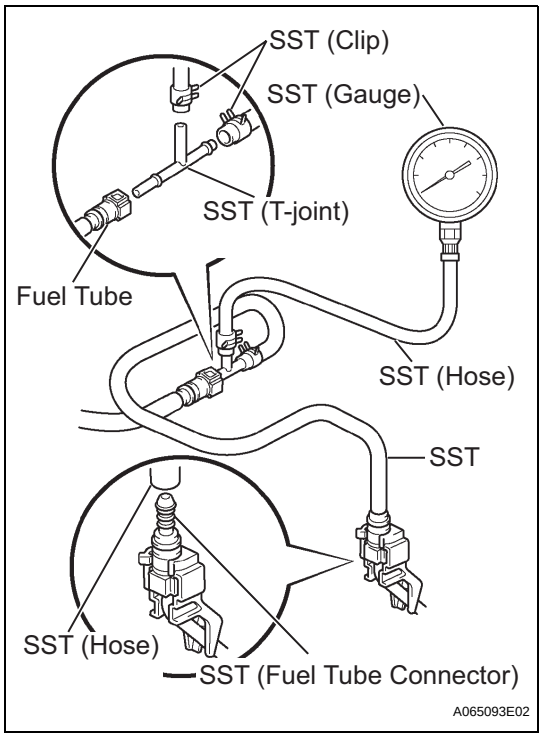

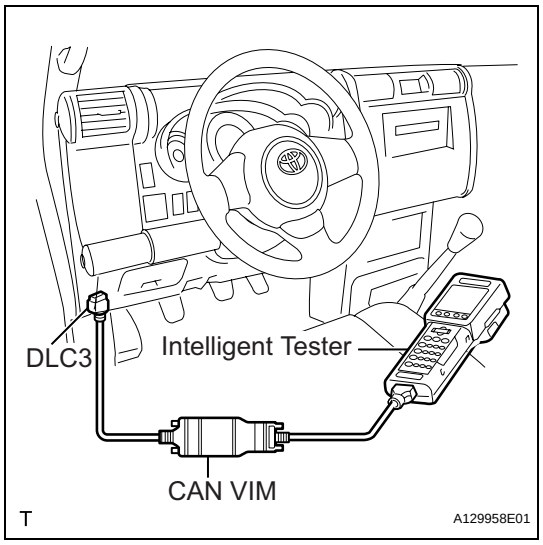

(i) Connect the intelligent tester to the DLC3.
(j) Turn the ignition switch ON.
(k) Turn the intelligent tester ON.
(l) Select the following menu items: DIAGNOSIS / ENHANCED OBD ll / ACTIVE TEST / FUEL PUMP / SPD / ON.
(m) Measure the fuel pressure.
Standard:

281 to 287 kPa (2.87 to 2.93 kgf/cm^2, 40.8 to 41.7 psi)

- If the fuel pressure is greater than the standard value, replace the fuel pump.
- If the fuel pressure is less than the standard value, check the connection between the fuel hose and fuel pump.

(n) Select the following menu items: DIAGNOSIS / ENHANCED OBD ll / ACTIVE TEST / PRIMARY / FUEL PUMP / SPD / OFF.
(o) Check that the fuel pressure does not change for 5 minutes.
Standard:

147 kPa (1.5 kgf/cm^2, 21 psi)

If the result is not as specified, check the fuel pump and fuel injector.
(p) Disconnect the intelligent tester from the DLC3.
(q) Disconnect the cable from the battery negative terminal.
(r) Remove SST and the fuel tube connector while being careful to prevent gasoline splashes.
(s) Connect the fuel tube.

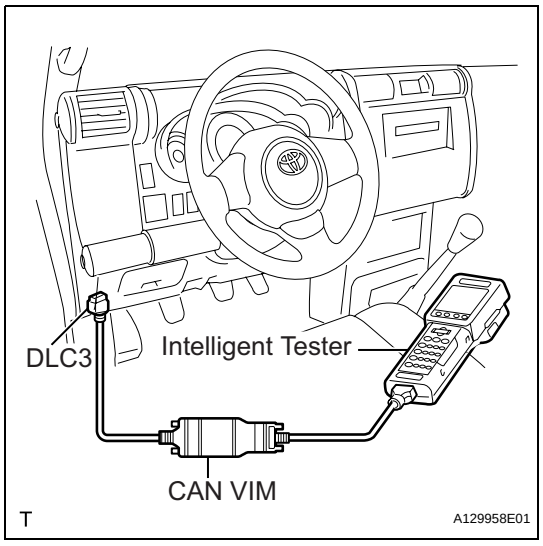

3. CHECK FOR FUEL LEAKAGE

(a) Connect the intelligent tester to the DLC3.
(b) Turn the ignition switch ON.
NOTICE:
Do not start the engine.
(c) Turn the intelligent tester ON.
(d) Select the following menu items: DIAGNOSIS / ENHANCED OBD ll / ACTIVE TEST / FUEL PUMP / SPD / ON.
(e) Check that there is no leakage from the fuel system.

FU

FUEL INJECTOR

COMPONENTS

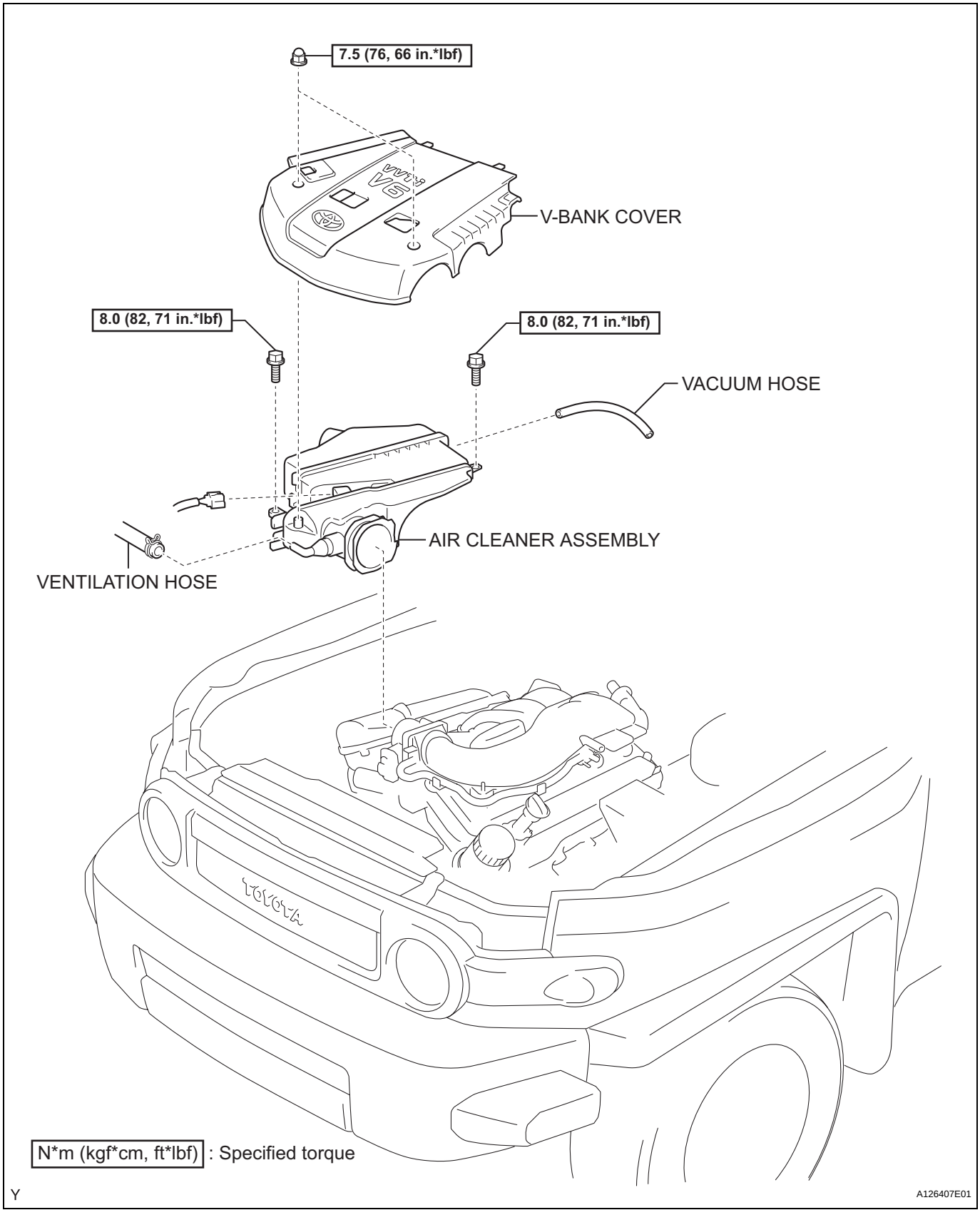

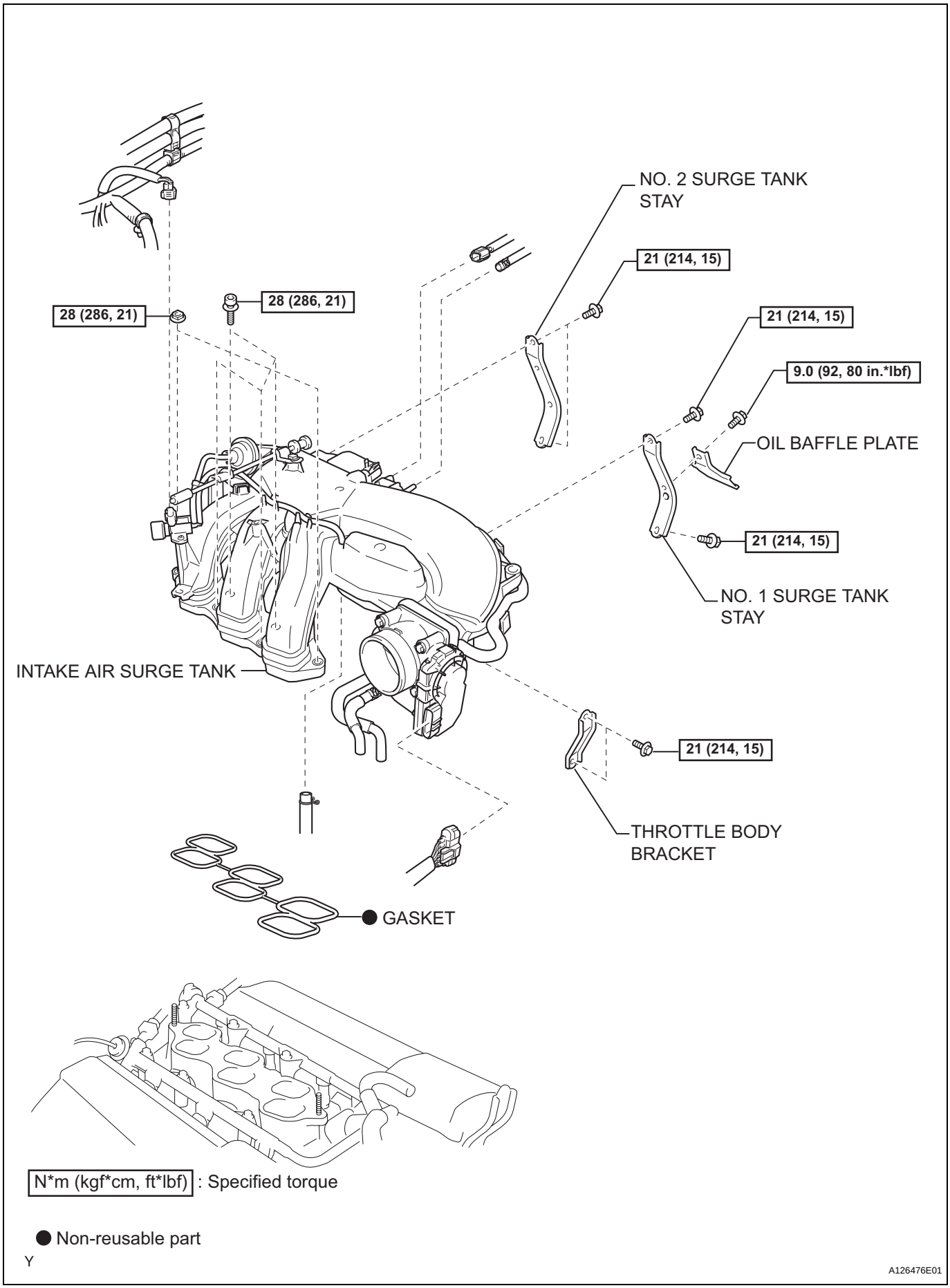
NO. 2 SURGE TANK STAY
21 (214, 15)
28 (286, 21)
28 (286, 21)
21 (214, 15)
9.0 (92, 80 in.*lbf)
OIL BAFFLE PLATE
21 (214, 15)
NO. 1 SURGE TANK STAY
INTAKE AIR SURGE TANK
21 (214, 15)
THROTTLE BODY BRACKET
● GASKET
N*m (kgf*cm, ft*lbf) : Specified torque
● Non-reusable part
Y
A126476E01

FU

FU

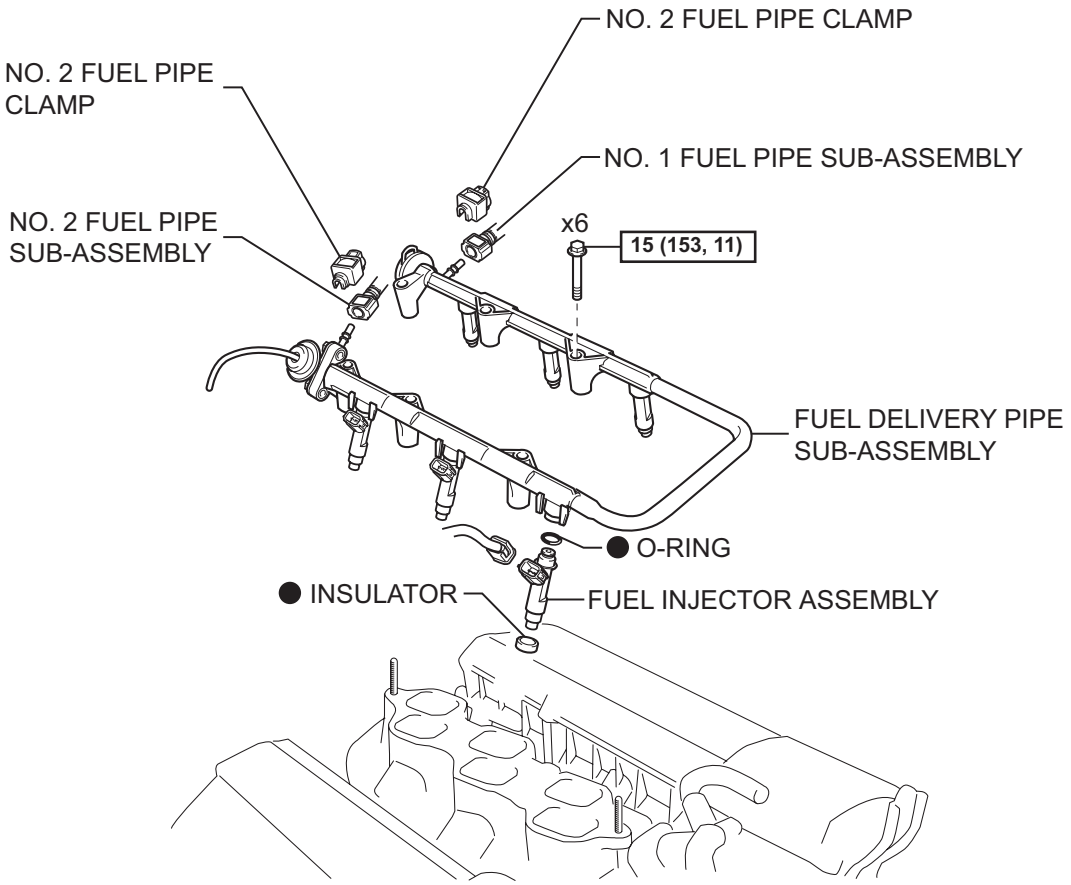

N*m (kgf*cm, ft*lbf) : Specified torque

● Non-reusable part

Y

A126477E01

REMOVAL

1. **DISCHARGE FUEL SYSTEM PRESSURE**
   (See page FU-1)
2. **DISCONNECT CABLE FROM NEGATIVE BATTERY TERMINAL**
3. **DRAIN ENGINE COOLANT (See page CO-3)**
4. **REMOVE V-BANK COVER (See page ES-428)**
5. **REMOVE AIR CLEANER ASSEMBLY (See page ES-429)**
6. **REMOVE THROTTLE BODY BRACKET**
   (a) Remove the 2 bolts and the throttle body bracket.

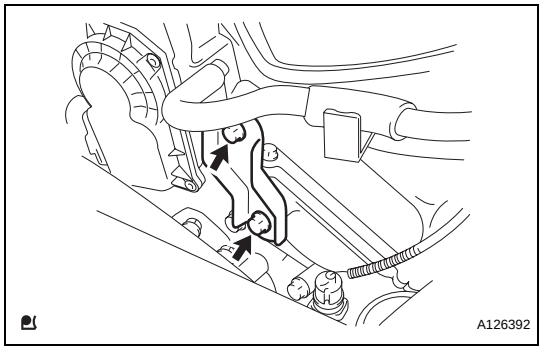

7. **REMOVE OIL BAFFLE PLATE**
   (a) Remove the bolt and the oil baffle plate.

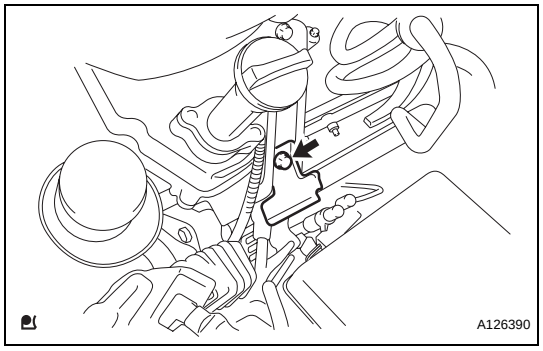

8. **REMOVE NO. 1 SURGE TANK STAY**
   (a) Remove the 2 bolts and the No. 1 surge tank stay.

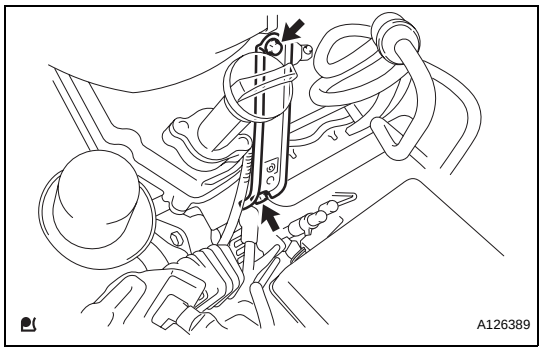

FU

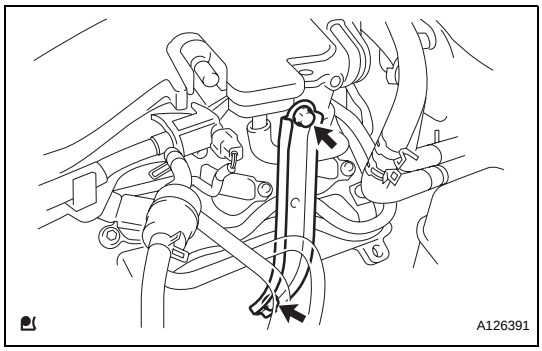

9. REMOVE NO. 2 SURGE TANK STAY

(a) Remove the 2 bolts and the No. 2 surge tank stay.

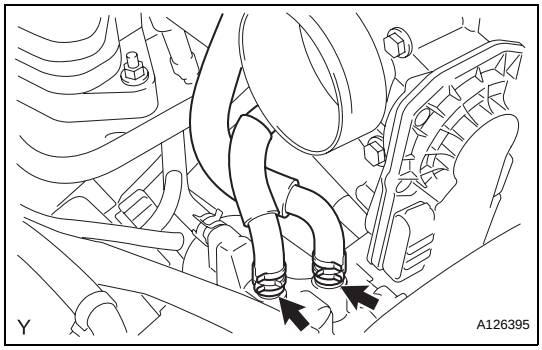

10. REMOVE INTAKE AIR SURGE TANK

(a) Disconnect the 2 water by-pass hoses.

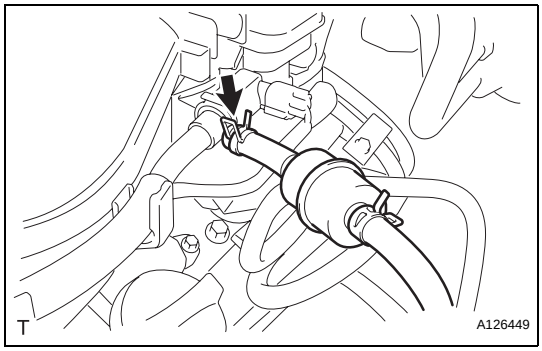

(b) Disconnect the fuel vapor feed hose.

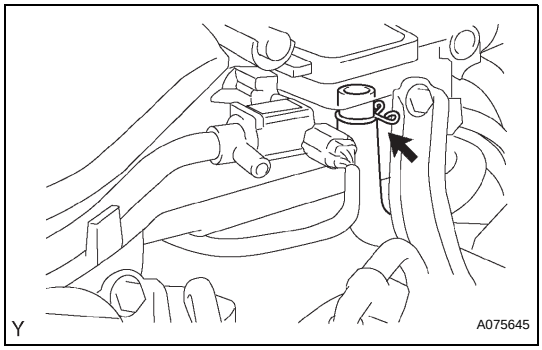

(c) Disconnect the ventilation hose.

FU

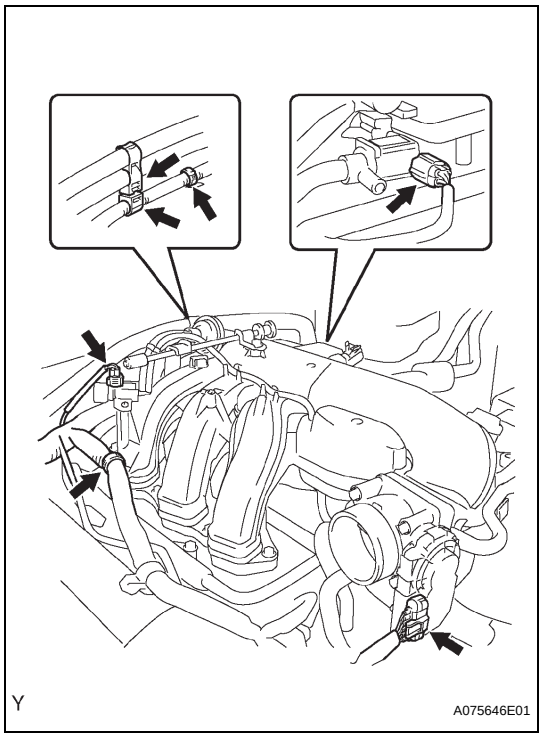

(d) Disconnect the 2 VSV connectors.
(e) Disconnect the throttle body with motor connector.
(f) Separate the 3 wire harness clamps and the hose clamp.

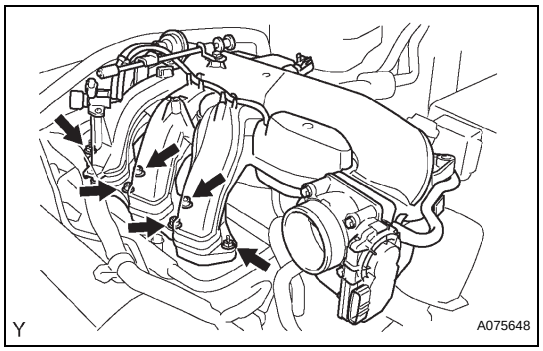

(g) Remove the 2 nuts.
(h) Using a socket hexagon wrench 8, remove the 4 bolts, intake air surge tank and the gasket.

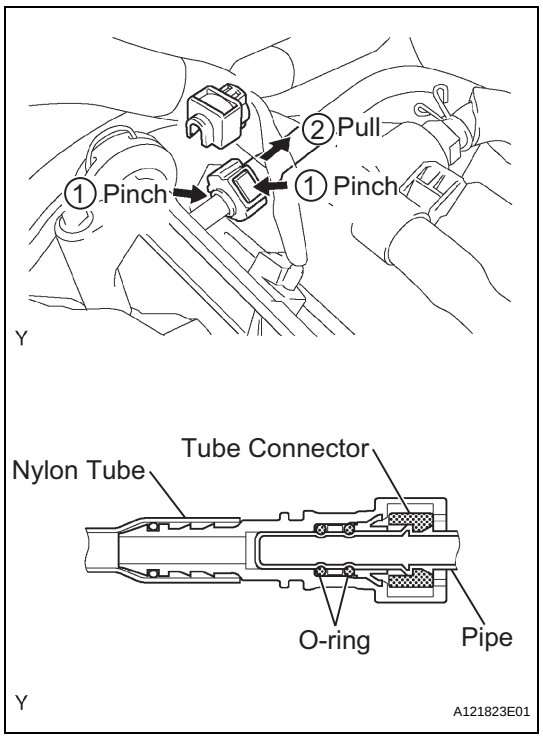

11. DISCONNECT NO. 1 FUEL PIPE SUB-ASSEMBLY

(a) Remove the No. 2 fuel pipe clamp.
(b) Pinch the tube connector, and then pull the fuel pipe out of the delivery pipe as shown in the illustration.

NOTICE:

- **Remove any dirt and foreign objects from the fuel tube connector before performing this work.**
- **Do not allow any scratches or foreign objects on the parts when disconnecting, as the fuel tube connector has the O-ring that seals the pipe.**
- **Perform this work by hand. Do not use any tools.**
- **Do not forcibly bend, twist or turn the nylon tube.**
- **Protect the disconnected part by covering it with a vinyl bag after disconnecting the fuel tube.**
- **If the fuel tube connector and pipe are stuck, push and pull to release them.**

FU

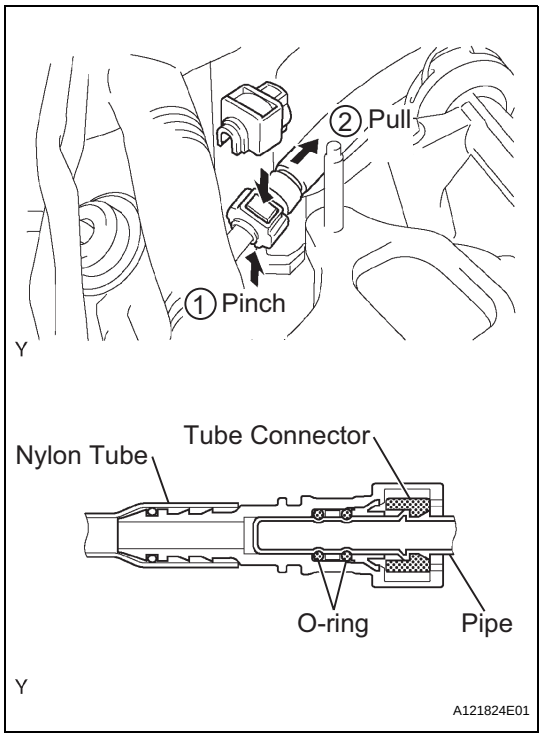

12. DISCONNECT NO. 2 FUEL PIPE SUB-ASSEMBLY

(a) Remove the No. 2 fuel pipe clamp.

(b) Pinch the tube connector, and then pull the fuel pipe out of the delivery pipe as shown in the illustration.

NOTICE:

- **Remove any dirt and foreign objects from the fuel tube connector before performing this work.**
- **Do not allow any scratches or foreign objects on the parts when disconnecting, as the fuel tube connector has the O-ring that seals the pipe.**
- **Perform this work by hand. Do not use any tools.**
- **Do not forcibly bend, twist or turn the nylon tube.**
- **Protect the disconnected part by covering it with a vinyl bag after disconnecting the fuel tube.**
- **If the fuel tube connector and pipe are stuck, push and pull to release them.**

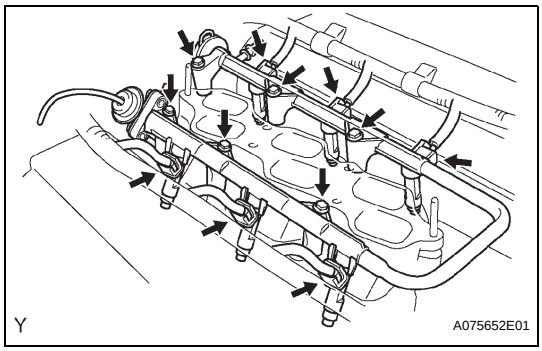

13. REMOVE FUEL DELIVERY PIPE SUB-ASSEMBLY

(a) Disconnect the 6 fuel injector connectors.

(b) Remove the 6 bolts and remove the fuel delivery pipe together with the 6 fuel injectors.

NOTICE:

Do not drop the injectors when removing the fuel delivery pipe.

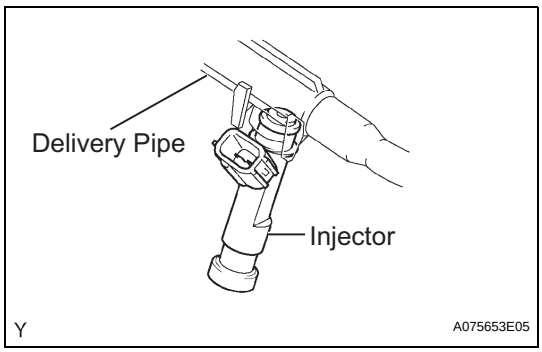

14. REMOVE FUEL INJECTOR

(a) Pull the 6 injectors out of the delivery pipe.

INSPECTION

1. INSPECT FUEL INJECTOR ASSEMBLY

(a) Check the resistance.

(1) Using an ohmmeter, measure the resistance between the terminals.

Standard resistance

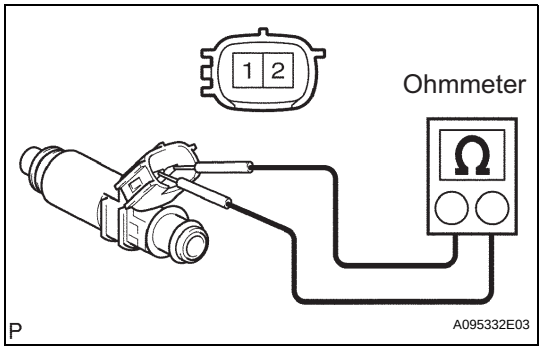

Tester Connection	Specified Condition
1 -2	11.6 to 12.4 Ωat 20°C (68°F)

If the result is not as specified, replace the fuel injector.

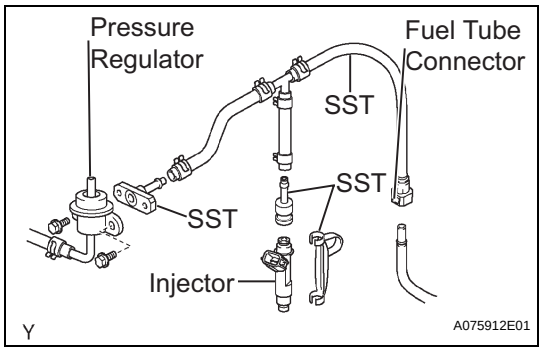

(b) Check the injection volume.

NOTICE:

- **Perform the test in a well-ventilated area away from naked for flames.**
- **Handle the fuel tube connector carefully.**

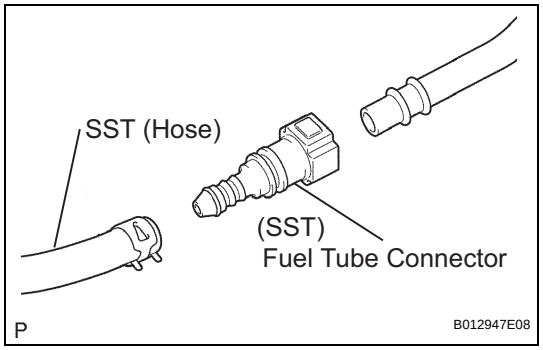

(1) Install the fuel tube connector into SST (hose), then connect the tube connector to the fuel pipe.

SST 09268-31011 (95336-08070, 09268-41500)

CAUTION:

Connect the fuel tube connector (quick type) after observing the precautions.

(2) Remove the fuel pressure regulator (See page FU-22).

(3) Install the O-ring onto the fuel inlet of the pressure regulator.

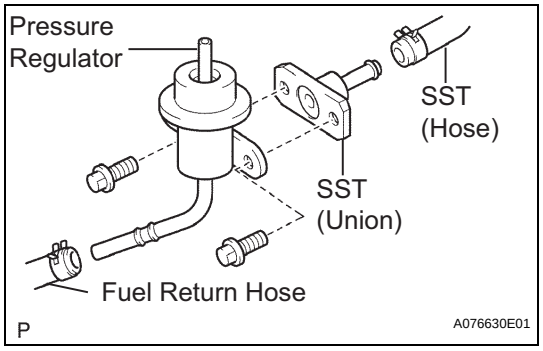

(4) Connect SST (hose) to the fuel inlet of the pressure regulator with another SST (union) and the 2 bolts.

SST 09268-31011 (09268-41091, 95336-08070)

Torque: 9.0 N*m (92 kgf*cm, 80 in.*lbf)

(5) Connect the fuel return hose to the fuel outlet of the pressure regulator.

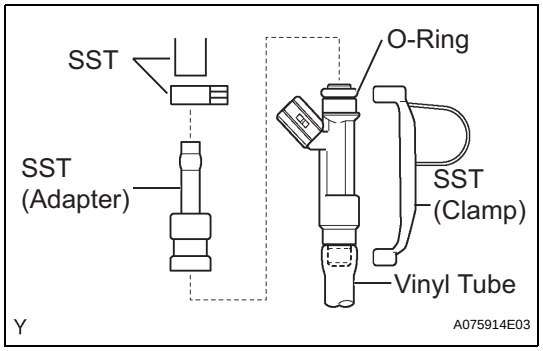

(6) Install a new O-ring onto the injector.

(7) Connect SST (adaptor and hose) to the injector and hold the injector and union with SST (clamp).

SST 09268-31011 (95336-08070, 09268-41100), 09268-41140

(8) Set the injector in a graduated cylinder.

CAUTION:

Install a suitable vinyl tube onto the injector to prevent gasoline splashes.

FU

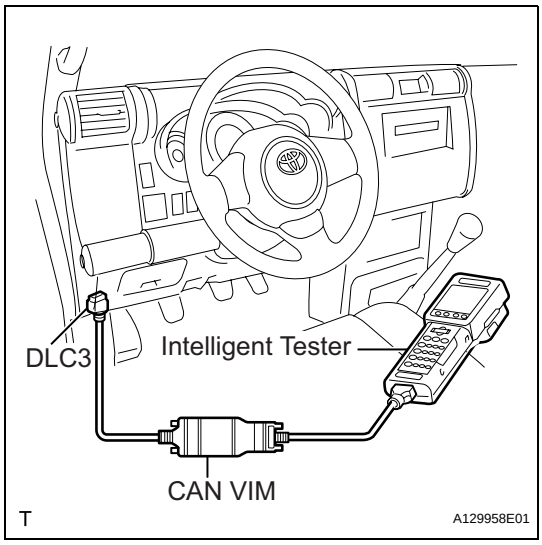

(9) Connect the intelligent tester to the DLC3.
(10) Turn the ignition switch ON.
(11) Turn the intelligent tester ON.
(12) Select the following menu items: DIAGNOSIS / ENHANCED OBD ll / ACTIVE TEST / FUEL PUMP / SPD / ON.
(13) Install SST onto the fuel injector.

FU

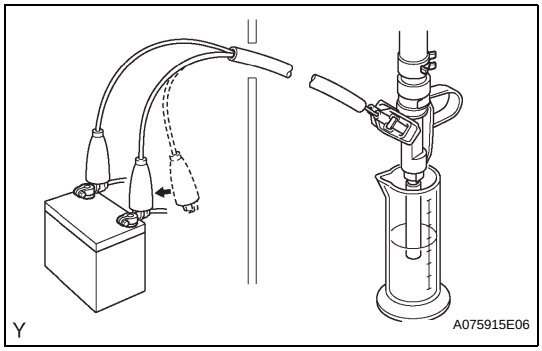

(14) Connect SST to the battery, then measure the injection volume for 15 seconds. Perform the inspection 2 or 3 times, then calculate the average.
Standard:

Injection Volume	Difference Between Each Fuel Injector
76 to 91 cm^3 (4.6 to 5.5 cu in.) per 15 seconds	15 cm^3 (0.9 cu in.) or less

NOTICE:
Always do the switching at the battery side.
If the result is not as specified, replace the fuel injector.

(c) Check for fuel leakage.
(1) When checking the injection volume, remove SST from the battery. Inspect the fuel leakage from the fuel injector.
Standard:
1 drop or less every 12 minutes.
If the result is not as specified, replace the fuel injector.

INSTALLATION

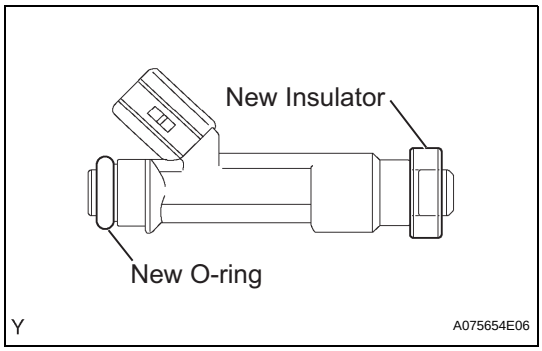

1. INSTALL FUEL INJECTOR
(a) Install a new insulator onto each fuel injector.
(b) Apply a light coat of spindle oil or gasoline to a new O-ring and install it onto each fuel injector.

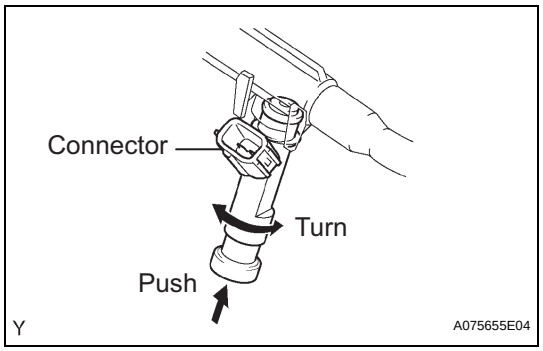

(c) While turning the fuel injector left and right, install it onto the fuel delivery pipe.
(d) Position the fuel injector connector facing outward.

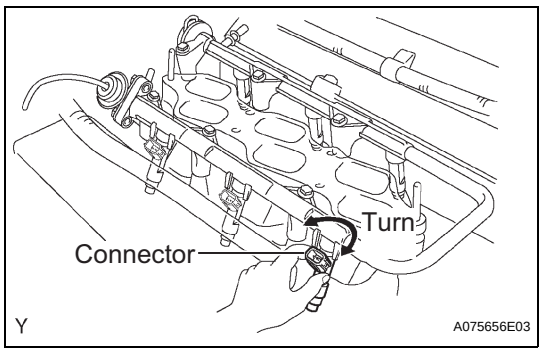

2. INSTALL FUEL DELIVERY PIPE SUB-ASSEMBLY

(a) Place the fuel delivery pipe together with the 6 fuel injectors on the intake manifold.
(b) Provisionally install the 6 bolts, which are used to hold the fuel delivery pipe, onto the intake manifold.
(c) Check that the fuel injectors rotate smoothly.
HINT:
If the fuel injectors do not rotate smoothly, replace the O-ring.
(d) Position each fuel injector connector facing outward.
(e) Tighten the 6 bolts, which are used to hold the fuel delivery pipe, to the intake manifold.
Torque: 15 N*m (153 kgf*cm, 11 ft.*lbf)
(f) Connect the 6 fuel injector connectors.

3. CONNECT NO. 2 FUEL PIPE SUB-ASSEMBLY

(a) Push the tube connector into the pipe until the tube connector makes a "click" sound.
NOTICE:
- **Check if there is any damage or foreign objects on the connected part of the fuel pipe.**
- **After connecting, check that the pipe and connector are securely connected by pulling them.**

(b) Install the fuel pipe clamp.

4. CONNECT NO. 1 FUEL PIPE SUB-ASSEMBLY

(a) Push the tube connector into the pipe until the tube connector makes a "click" sound.
NOTICE:
- **Check if there is any damage or foreign matter on the connected part of the fuel pipe.**
- **After connecting, check that the pipe and connector are securely connected by pulling them.**

(b) Install the fuel pipe clamp.

5. INSTALL INTAKE AIR SURGE TANK

(a) Install a new gasket onto the intake air surge tank.

FU

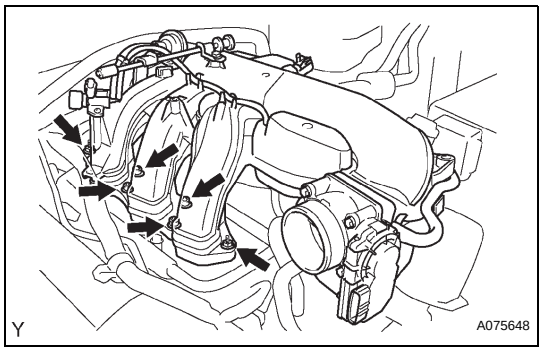

(b) Using a socket hexagon wrench 8, install the intake air surge tank with the 4 bolts.
Torque: 28 N*m (286 kgf*cm, 21 ft.*lbf)
(c) Install the 2 nuts.
Torque: 28 N*m (286 kgf*cm, 21 ft.*lbf)

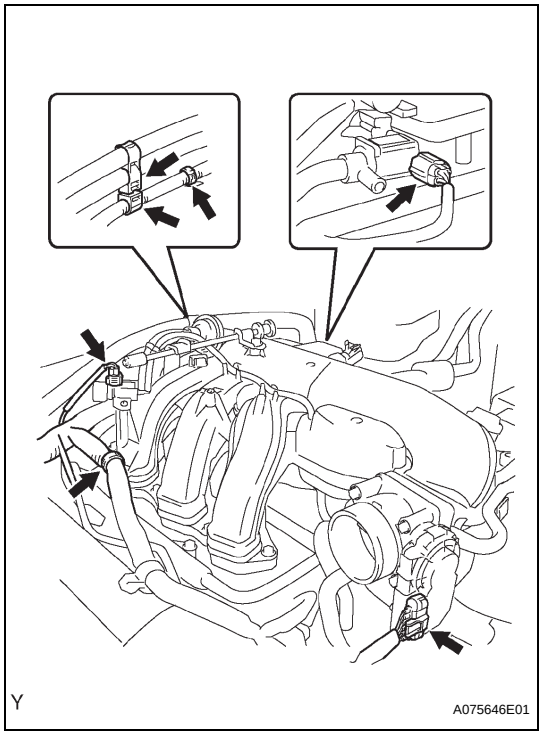

(d) Install the 3 wire harness clamps and hose clamp.
(e) Connect the throttle body with motor connector.
(f) Connect the 2 VSV connectors.

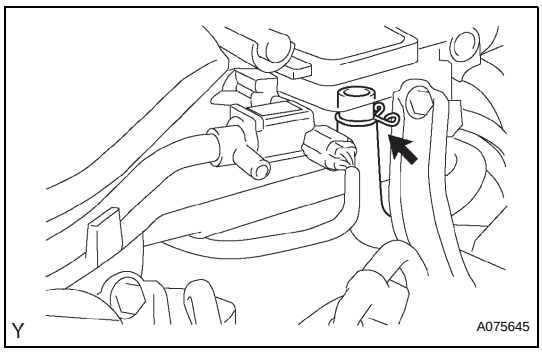

(g) Connect the ventilation hose.

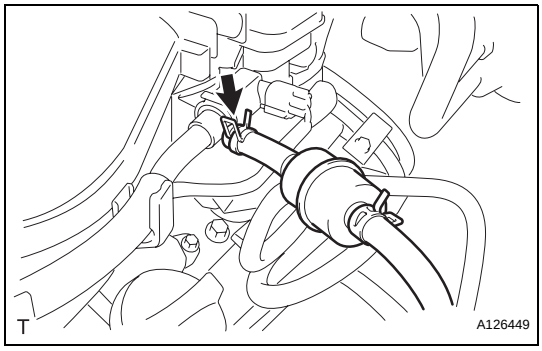

(h) Connect the fuel vapor feed hose.

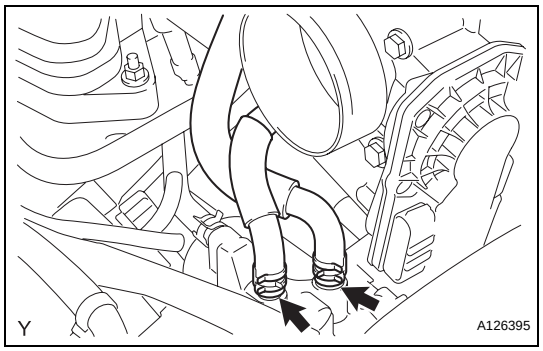

(i) Connect the 2 water by-pass hoses.

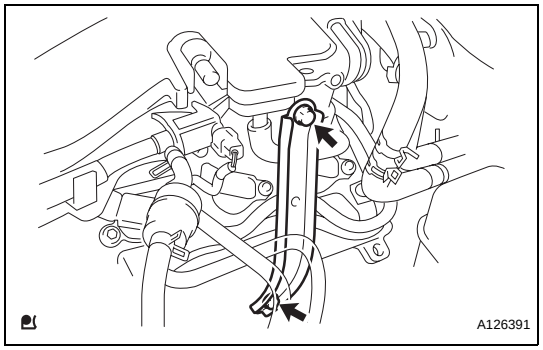

6. INSTALL NO. 2 SURGE TANK STAY

(a) Install the No. 2 surge tank stay with the 2 bolts.
Torque: 21 N*m (214 kgf*cm, 15 ft.*lbf)

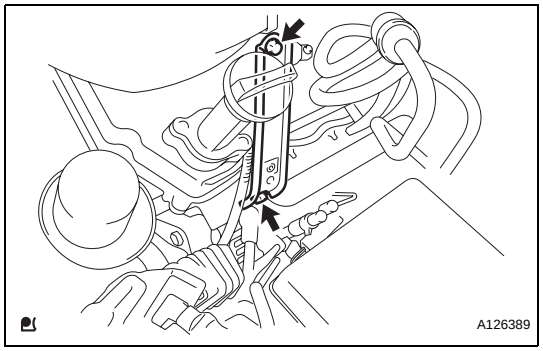

7. INSTALL NO. 1 SURGE TANK STAY

(a) Install the No. 1 surge tank stay with the 2 bolts.
Torque: 21 N*m (214 kgf*cm, 15 ft.*lbf)

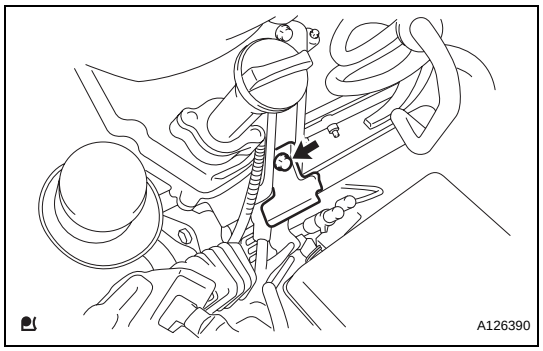

8. INSTALL OIL BAFFLE PLATE

(a) Install the oil baffle plate with the bolt.
Torque: 9.0 N*m (92 kgf*cm, 80 in.*lbf)

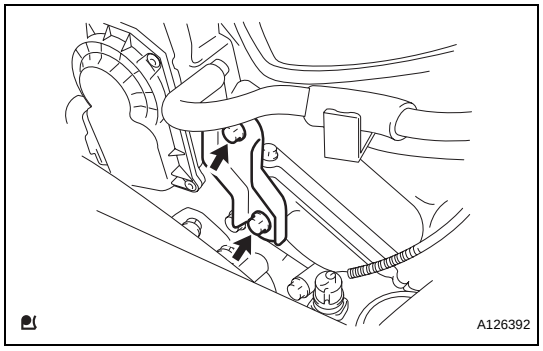

9. INSTALL THROTTLE BODY BRACKET

(a) Install the throttle body bracket with the 2 bolts.
Torque: 21 N*m (214 kgf*cm, 15 ft.*lbf)

10. INSTALL AIR CLEANER ASSEMBLY (See page ES-431)

11. CONNECT CABLE TO NEGATIVE BATTERY TERMINAL
Torque: 3.9 N*m (40 kgf*cm, 35 in.*lbf)

12. ADD ENGINE COOLANT (See page CO-3)

13. **CHECK FOR ENGINE COOLANT LEAKAGE (See page CO-4)**
14. **CHECK FOR FUEL LEAKAGE**
15. **INSTALL V-BANK COVER (See page ES-431)**

FUEL PRESSURE REGULATOR

COMPONENTS

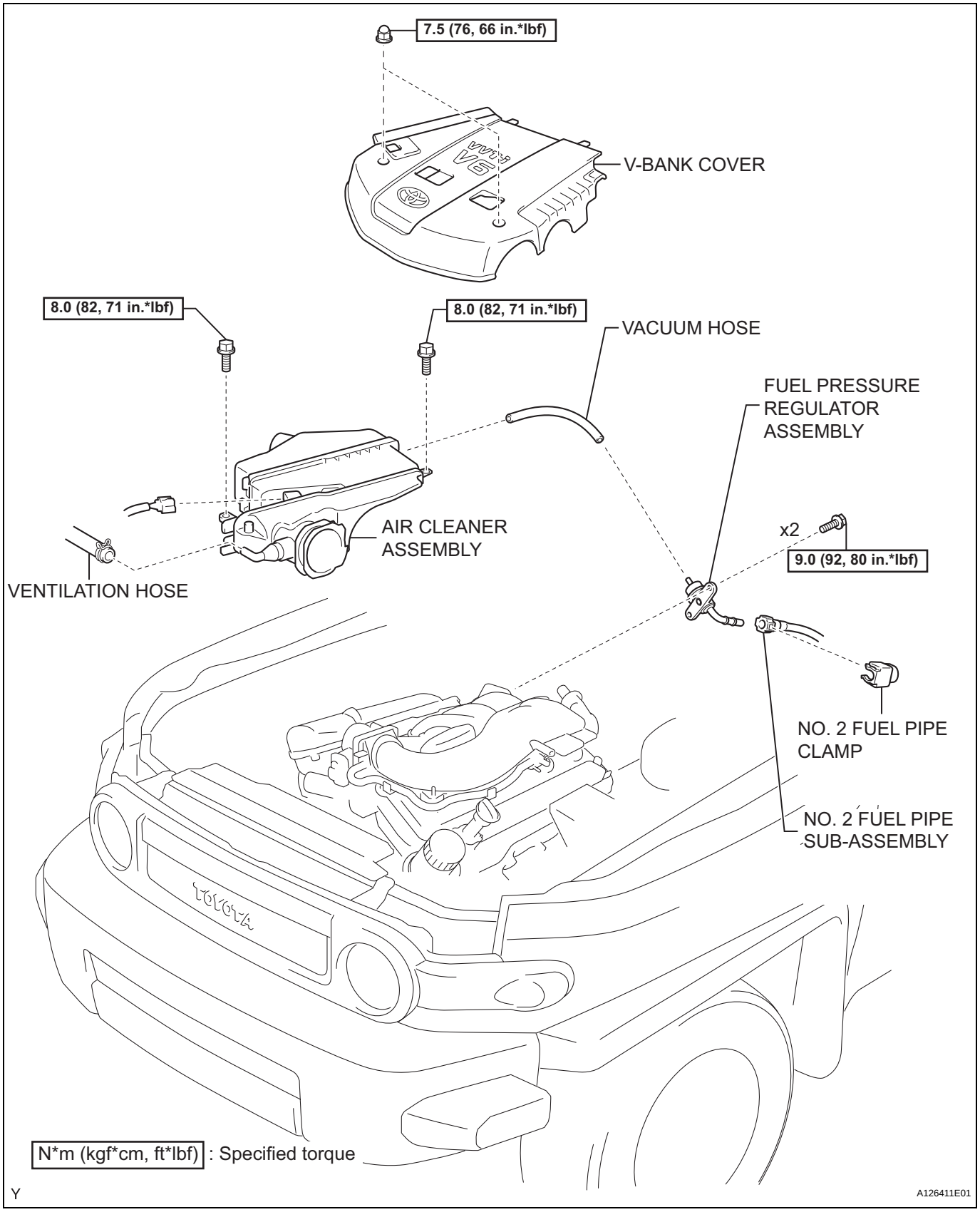

FU

REMOVAL

1. **DISCHARGE FUEL SYSTEM PRESSURE**
   (See page FU-1)
2. **DISCONNECT CABLE FROM NEGATIVE BATTERY TERMINAL**
3. **REMOVE V-BANK COVER (See page ES-428)**
4. **REMOVE AIR CLEANER ASSEMBLY (See page ES-429)**
5. **DISCONNECT NO. 2 FUEL PIPE SUB-ASSEMBLY (See page FU-14)**
6. **REMOVE FUEL PRESSURE REGULATOR ASSEMBLY**
   (a) Remove the vacuum hose.
   (b) Remove the 2 bolts, then remove the fuel pressure regulator.

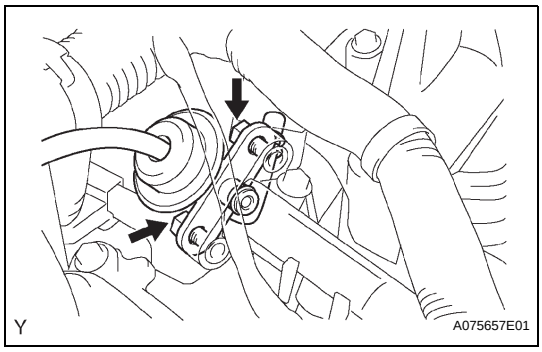

FU

INSTALLATION

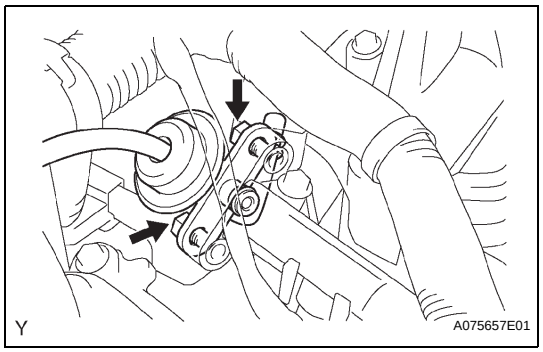

1. **INSTALL FUEL PRESSURE REGULATOR ASSEMBLY**
   (a) Install the vacuum hose.
   (b) Apply a light coat of spindle oil or gasoline to a new O-ring and install it onto the fuel pressure regulator.
   (c) Install the fuel pressure regulator with the 2 bolts.
   Torque: 9.0 N*m (92 kgf*cm, 80 in.*lbf)
2. **CONNECT NO. 2 FUEL PIPE SUB-ASSEMBLY (See page FU-17)**
3. **INSTALL AIR CLEANER ASSEMBLY (See page ES-431)**
4. **CONNECT CABLE TO NEGATIVE BATTERY TERMINAL**
   Torque: 3.9 N*m (40 kgf*cm, 35 in.*lbf)
5. **CHECK FOR FUEL LEAKAGE**
6. **INSTALL V-BANK COVER (See page ES-431)**

FU

FUEL PRESSURE PULSATION DAMPER

COMPONENTS

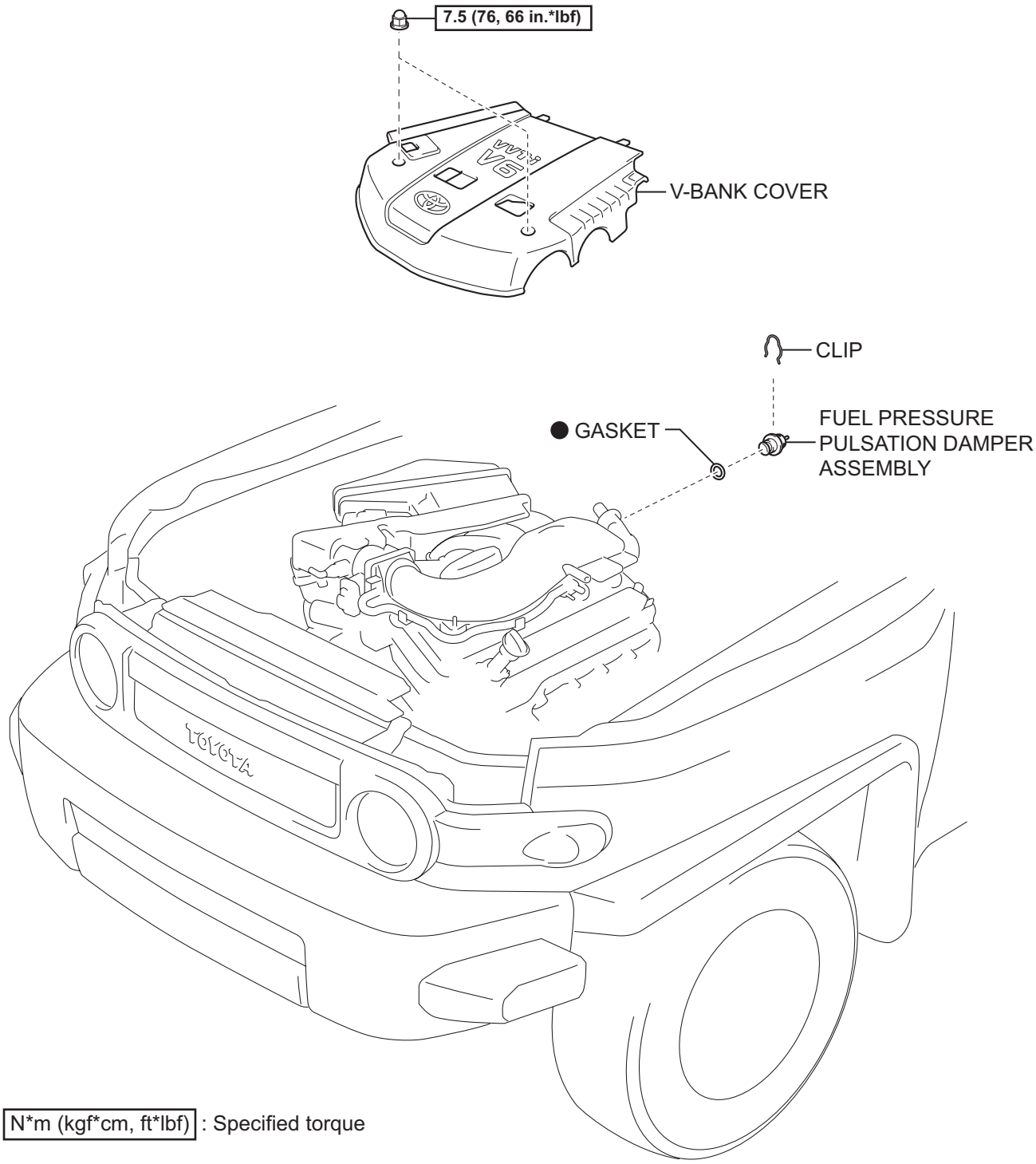

FU

REMOVAL

1. **DISCHARGE FUEL SYSTEM PRESSURE**
   (See page FU-1)
2. **REMOVE V-BANK COVER (See page ES-428)**
3. **REMOVE FUEL PRESSURE PULSATION DAMPER ASSEMBLY**
   (a) Remove the clip.
   (b) Pull the fuel pressure pulsation damper out of the fuel delivery pipe.

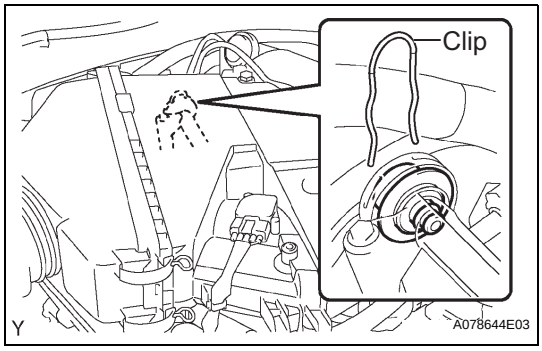

INSTALLATION

1. **INSTALL FUEL PRESSURE PULSATION DAMPER ASSEMBLY**
   (a) Apply a light coat of spindle oil or gasoline to a new O-ring and install it onto the fuel pressure pulsation damper.
   (b) Install the fuel pressure pulsation damper onto the fuel delivery pipe.
   (c) Install the clip.
2. **CHECK FOR FUEL LEAKAGE**
3. **INSTALL V-BANK COVER (See page ES-431)**

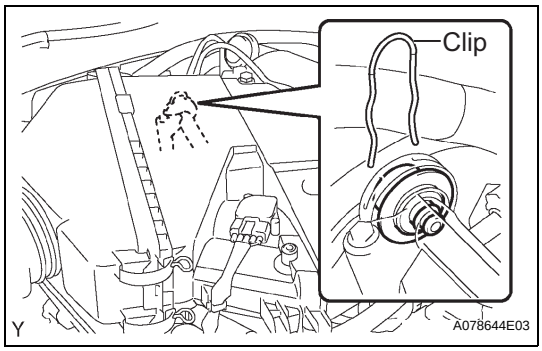

FUEL PUMP

COMPONENTS

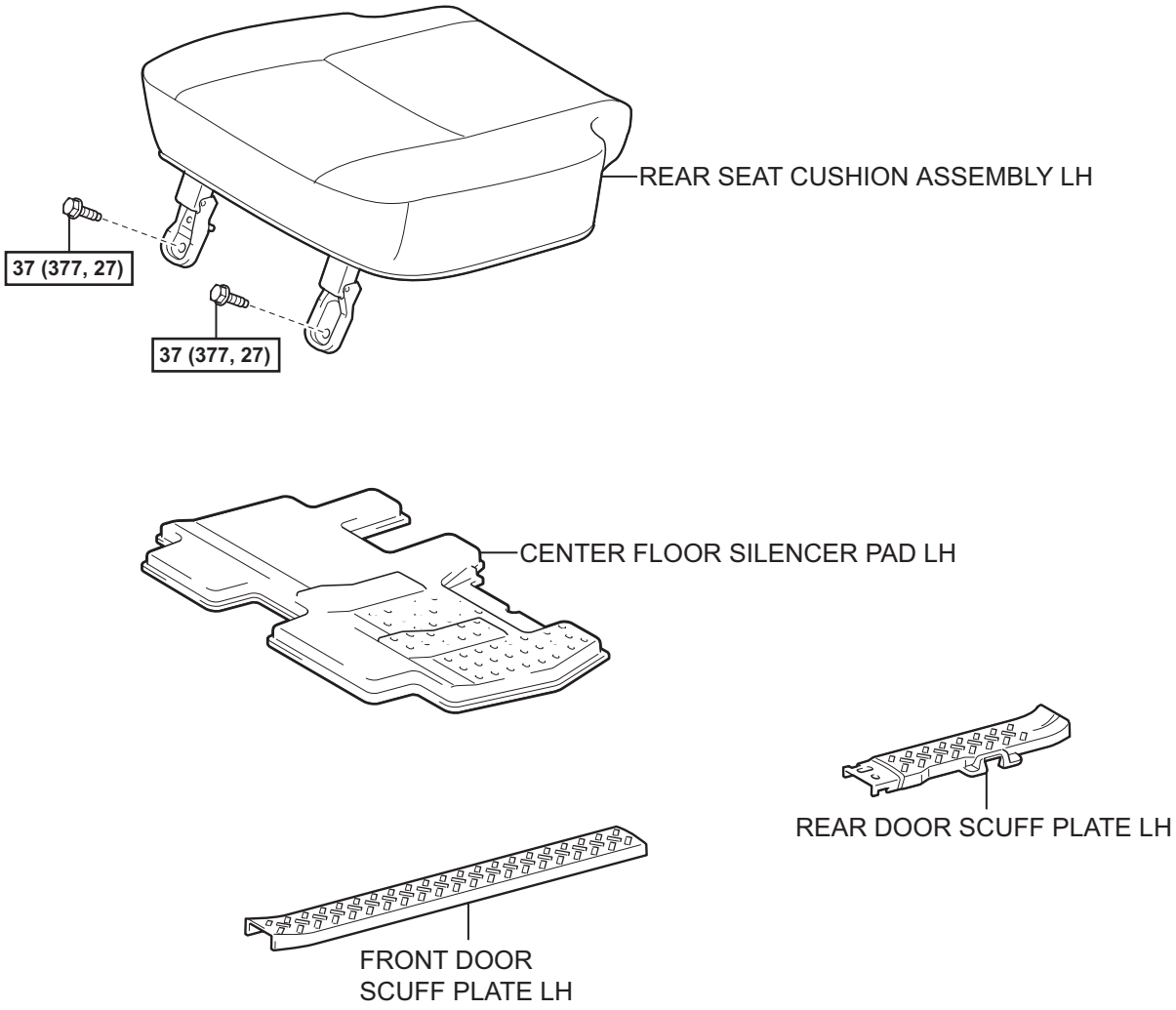

N*m (kgf*cm, ft*lbf) : Specified torque

P

A129922E01

FU

FU

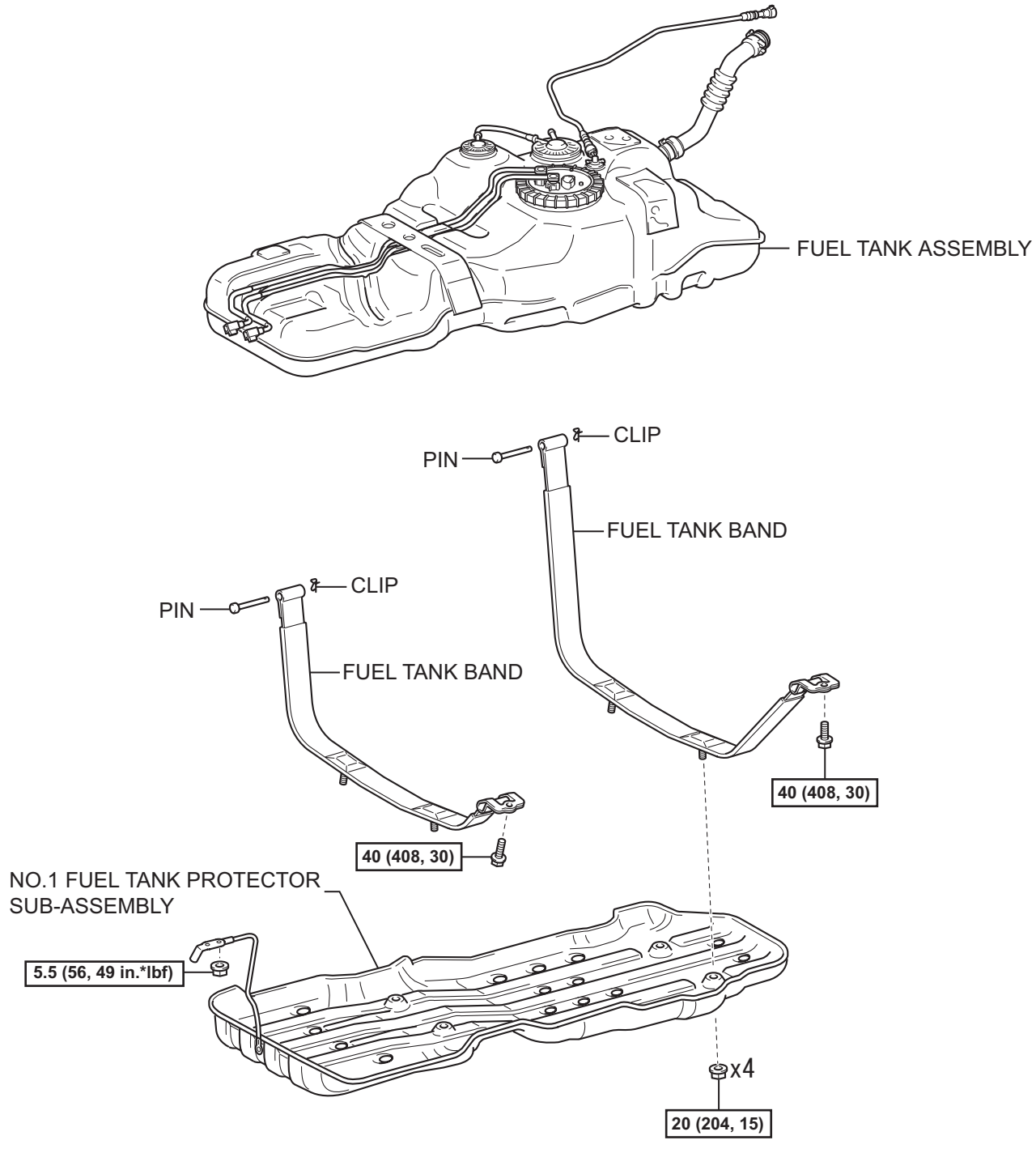

N*m (kgf*cm, ft*lbf) : Specified torque

Y

A129896E01

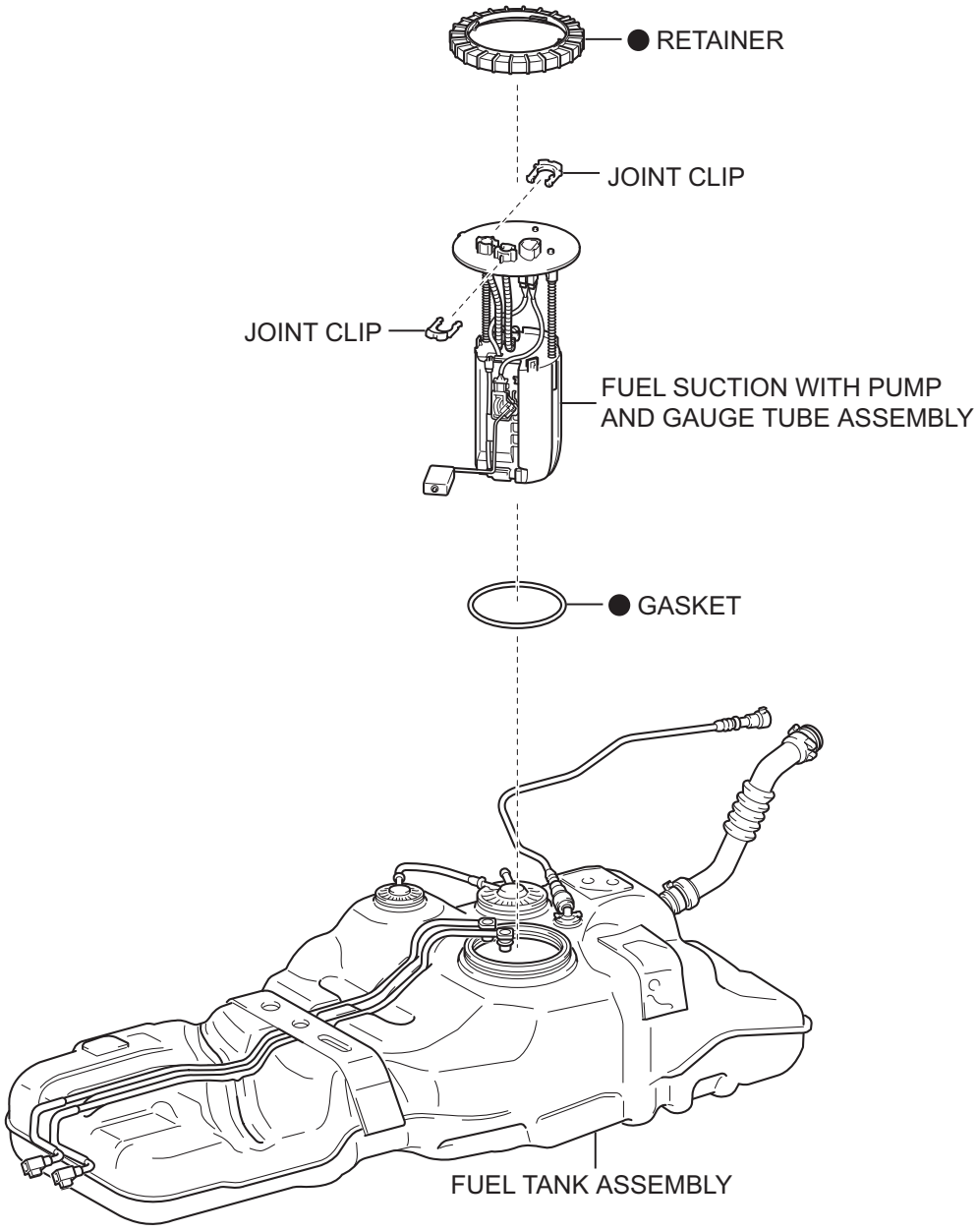

● Non-reusable part

Y

A130150E02

FU

FU

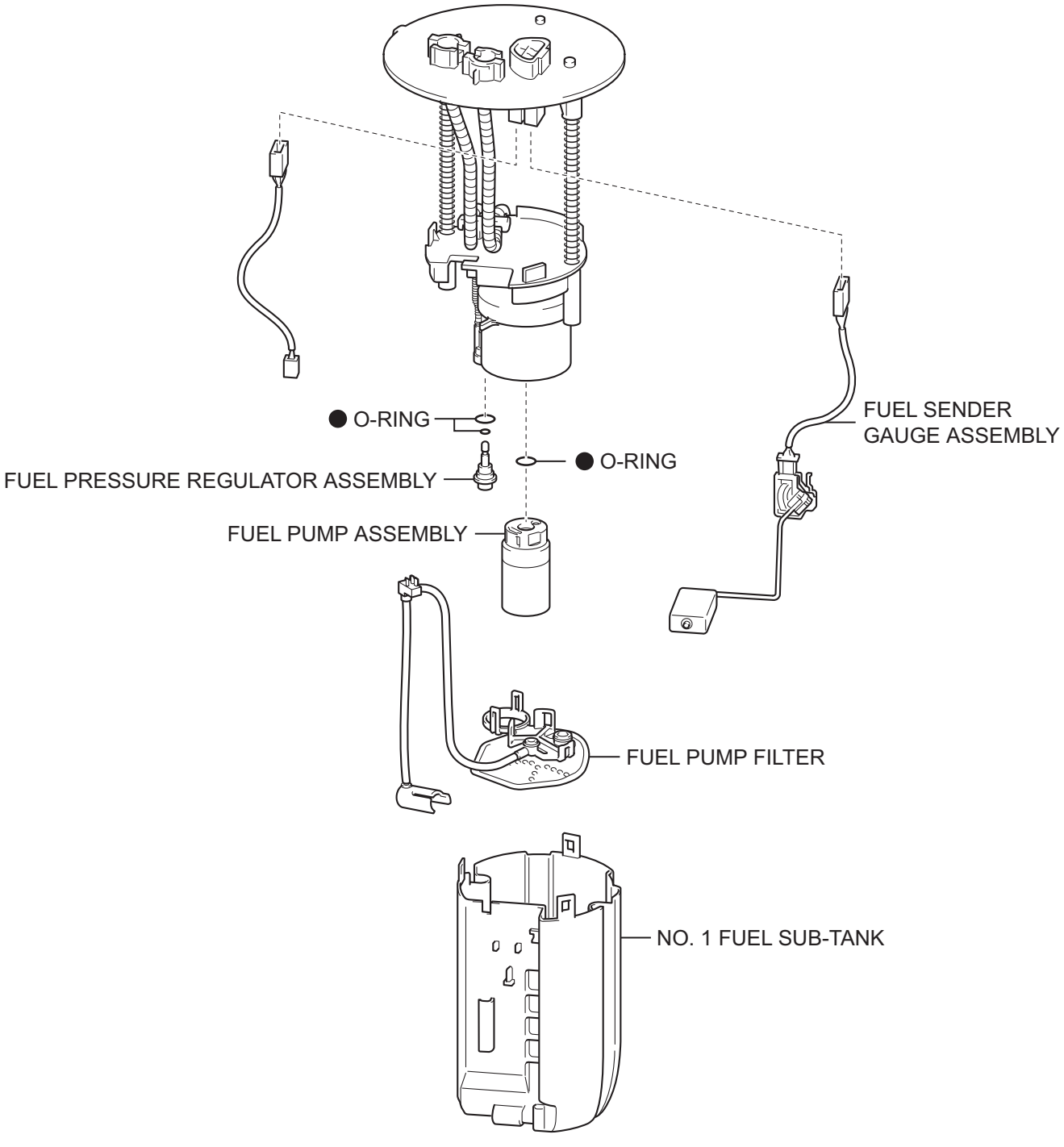
● O-RING
FUEL PRESSURE REGULATOR ASSEMBLY
● O-RING
FUEL PUMP ASSEMBLY
FUEL SENDER GAUGE ASSEMBLY
FUEL PUMP FILTER
NO. 1 FUEL SUB-TANK
● Non-reusable part
Y
A129895E01

REMOVAL

1. **DISCHARGE FUEL SYSTEM PRESSURE**
   (See page FU-1)
2. **DISCONNECT CABLE FROM NEGATIVE BATTERY TERMINAL**
3. **REMOVE FRONT DOOR SCUFF PLATE LH (See page FU-42)**
4. **REMOVE REAR DOOR SCUFF PLATE LH (See page FU-42)**
5. **REMOVE REAR SEAT CUSHION ASSEMBLY LH (See page FU-42)**
6. **REMOVE REAR FLOOR SERVICE HOLE COVER (See page FU-42)**
7. **DISCONNECT FUEL TANK TO FILLER PIPE HOSE (See page FU-43)**
8. **DISCONNECT FUEL TANK BREATHER TUBE SUB-ASSEMBLY (See page FU-44)**
9. **REMOVE NO.1 FUEL TANK PROTECTOR SUB-ASSEMBLY (See page FU-44)**
10. **DISCONNECT FUEL TANK MAIN TUBE AND FUEL TANK RETURN TUBE (See page FU-45)**
11. **REMOVE FUEL TANK VENT HOSE (See page FU-45)**
12. **REMOVE FUEL TANK ASSEMBLY (See page FU-45)**
13. **REMOVE FUEL TANK MAIN TUBE AND FUEL TANK RETURN TUBE (See page FU-47)**
14. **REMOVE FUEL SUCTION WITH PUMP AND GAUGE TUBE ASSEMBLY**
    NOTICE:
    Protect the connector and tube joint with masking tape or the equivalent to prevent any foreign matter from sticking to them. Clean any dirt and foreign matter from the fuel suction tube assembly before removing.

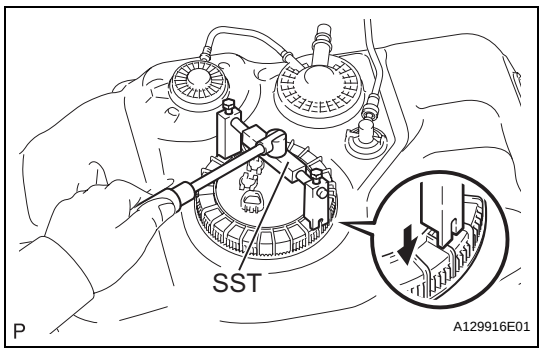

(a) Using a SST, loosen the retainer.
SST 09808-14020 (09808-01410, 09808-01420, 09808-01430)
HINT:
Align the tips of the SST with the ribs on the retainer.
(b) Remove the retainer.
(c) Pull the fuel pump assembly out of the fuel tank.
NOTICE:
Do not bend the arm of the sender gauge.

FU

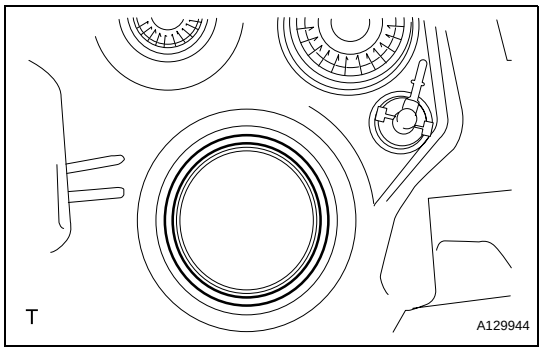

(d) Remove the gasket from the fuel tank.

DISASSEMBLY

1. REMOVE FUEL SENDER GAUGE ASSEMBLY

(a) Disconnect the connector.

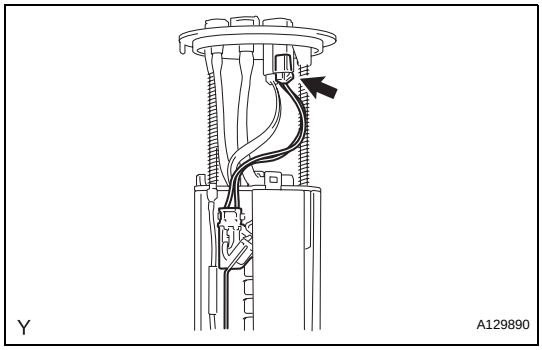

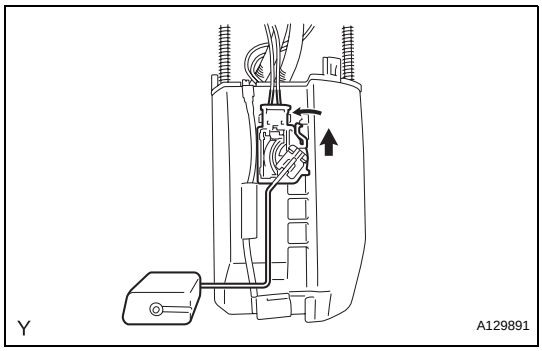

(b) Disengage the claw and remove the sender gauge by sliding it in the direction shown in the illustration.

2. REMOVE NO.1 FUEL SUB-TANK

(a) Disengage the 5 claws and remove the fuel pump tank.

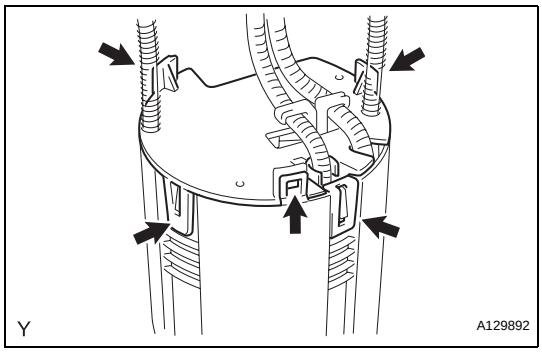

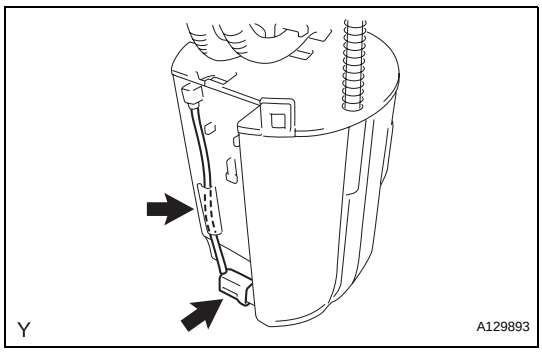

(b) Separate the connector and disengage the clamp.

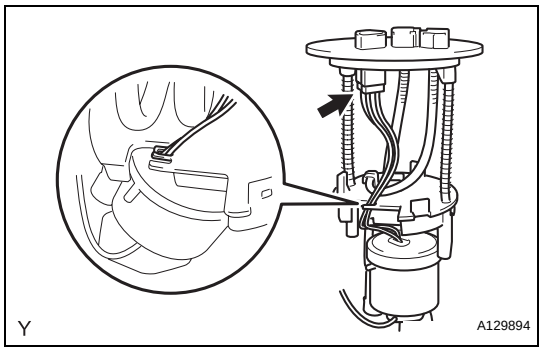

3. REMOVE FUEL PUMP ASSEMBLY

(a) Disengage the clamp, then disconnect the connector.

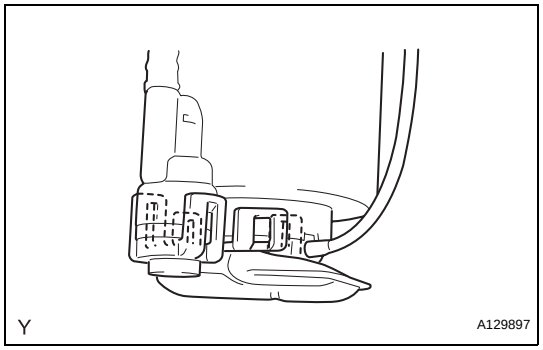

(b) Disengage the 5 claws and separate the fuel pump from the fuel pump case.

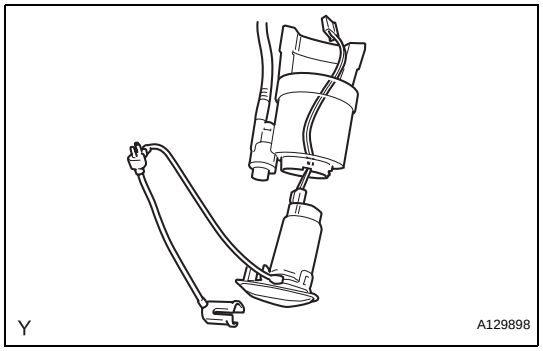

(c) Disconnect the connector from the fuel pump.

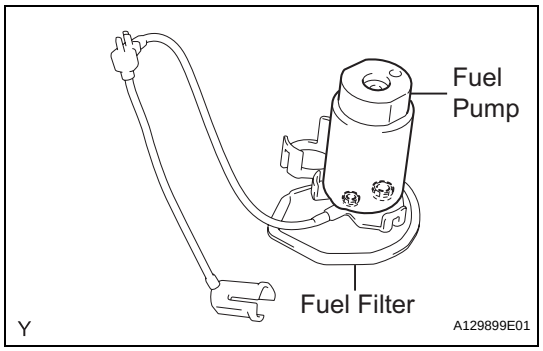

4. REMOVE FUEL PUMP FILTER

(a) Remove the fuel filter from the fuel pump.

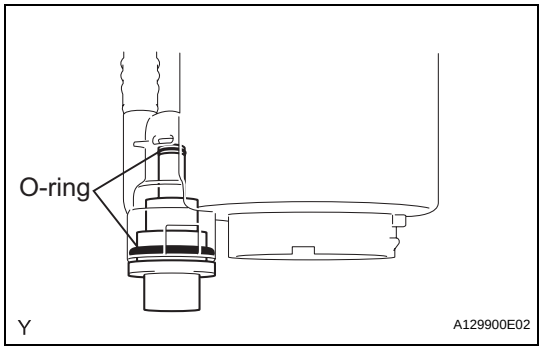

5. REMOVE FUEL PRESSURE REGULATOR ASSEMBLY

(a) Remove the fuel pressure regulator and the 2 O-rings.

FU

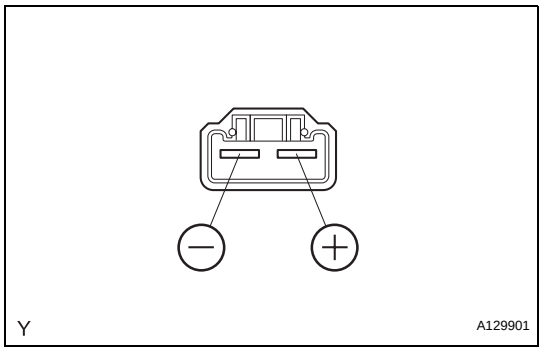

INSPECTION

1. INSPECT FUEL PUMP ASSEMBLY

(a) Check the resistance.

(1) Using an ohmmeter, measure the resistance between the terminals.

Standard resistance:

0.2 to 3.0 Ω at 20°C (68°F)

If the result is not as specified, replace the fuel pump.

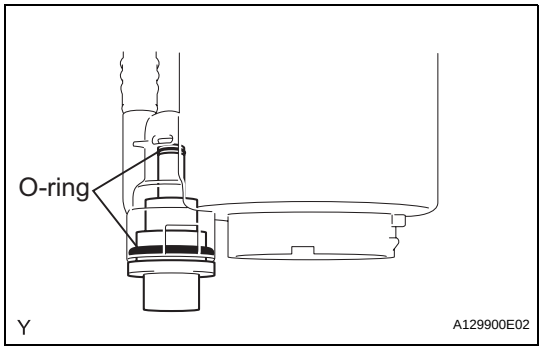

REASSEMBLY

1. INSTALL FUEL PRESSURE REGULATOR ASSEMBLY

(a) Install a new O-ring into the fuel pump case.

(b) Install a new O-ring onto the fuel pressure regulator.

(c) Install the pressure regulator.

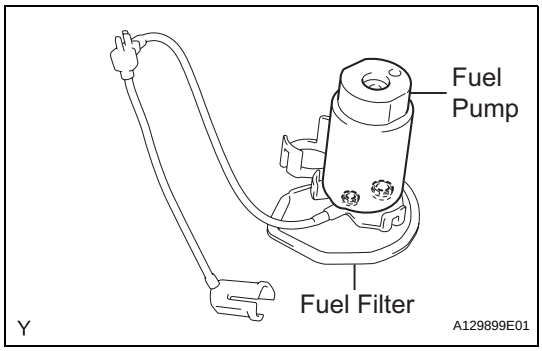

2. INSTALL FUEL PUMP FILTER ASSEMBLY

(a) Install the fuel filter onto the fuel pump.

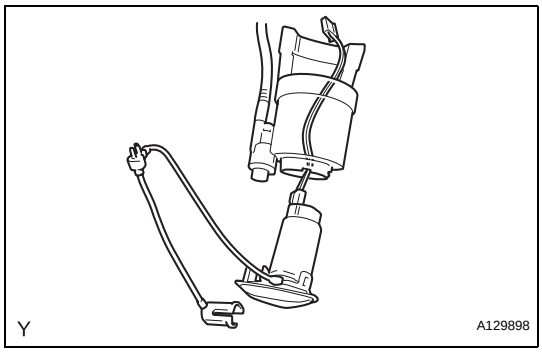

3. INSTALL FUEL PUMP ASSEMBLY

(a) Connect the fuel filter to the fuel pump.

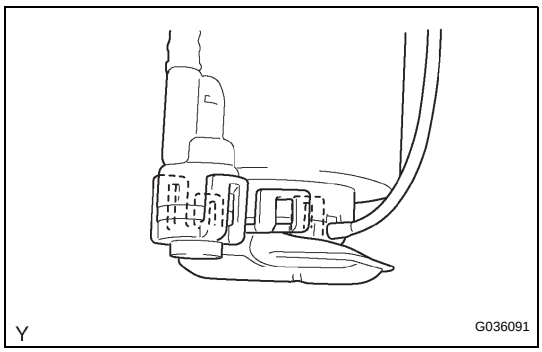

(b) Engage the 5 claw fittings and install the fuel pump onto the fuel pump case.

FU

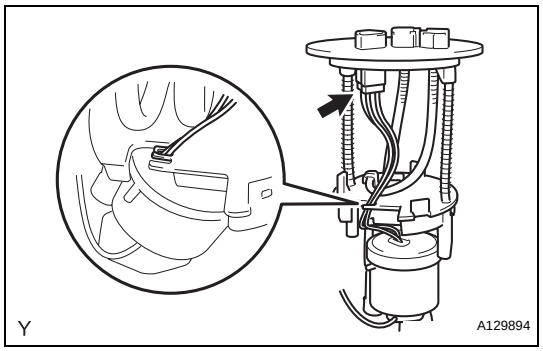

(c) Engage the clamp, then connect the connector.

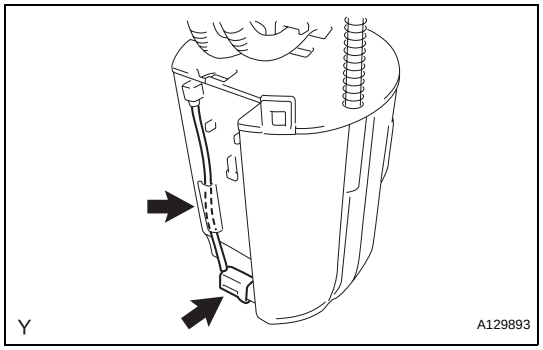

4. INSTALL NO. 1 FUEL SUB-TANK

(a) Install the connector and engage the clamp.

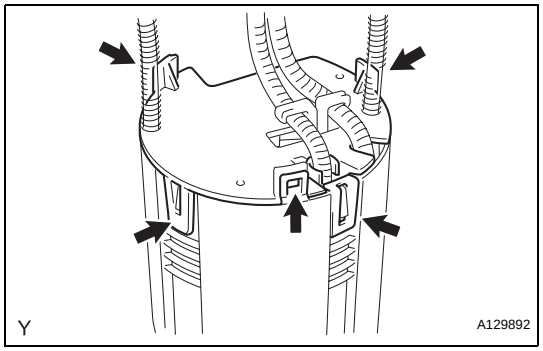

(b) Engage the 5 claws and install the fuel pump tank.

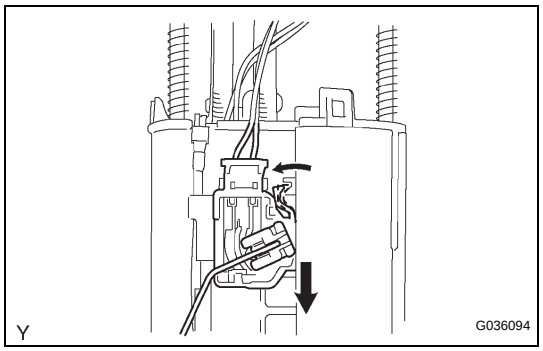

5. INSTALL FUEL SENDER GAUGE ASSEMBLY

(a) Engage the claw and install the sender gauge by sliding it in the direction as shown in the illustration.

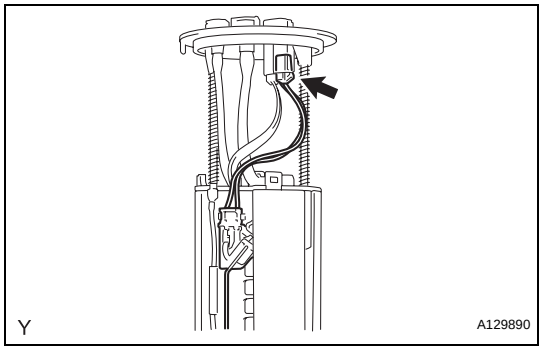

(b) Connect the connector.

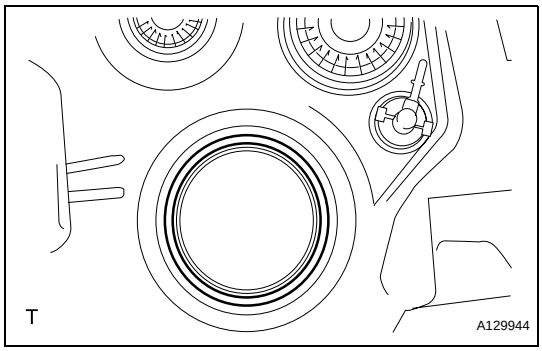

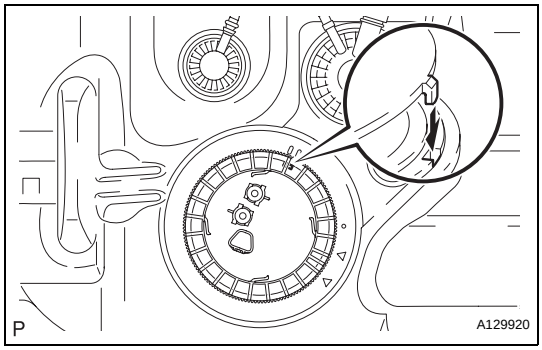

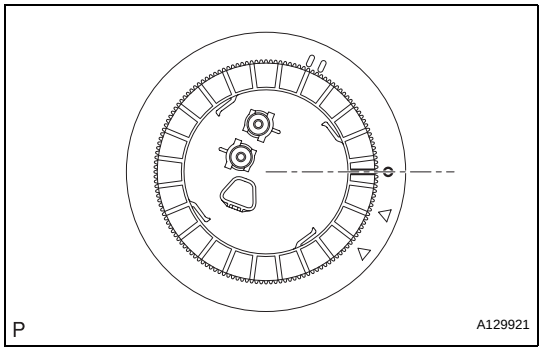

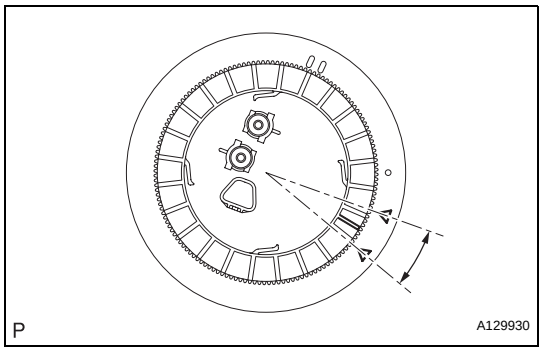

INSTALLATION

1. **INSTALL FUEL SUCTION WITH PUMP AND GAUGE TUBE ASSEMBLY**
   (a) Install a new gasket onto the fuel tank.
   (b) Set the fuel suction tube assembly to the fuel tank.
   NOTICE:
   Do not bend the arm of the fuel sender gauge.

   (c) Fit the spline of the fuel suction tube assembly into the keyway of the fuel tank.

   (d) Install a new retainer.
      (1) Align the mark on a new retainer with the rib on the fuel tank as shown in the illustration.

      (2) Using SST, turn the retainer 740° to 760° clockwise (more than 2 turns), and position the mark on the retainer within range A to install it.
      SST 09808-14020 (09808-01410, 09808-01420, 09808-01430)
      HINT:
      Align the tips of the SST with the ribs on the retainer.

2. **INSTALL FUEL TANK MAIN TUBE AND FUEL TANK RETURN TUBE (See page FU-49)**
3. **INSTALL FUEL TANK ASSEMBLY (See page FU-50)**
4. **REMOVE FUEL TANK VENT HOSE (See page FU-50)**
5. **CONNECT FUEL TANK MAIN TUBE AND FUEL TANK RETURN TUBE (See page FU-49)**
6. **CONNECT FUEL TANK BREATHER TUBE SUB-ASSEMBLY (See page FU-51)**
7. **CONNECT FUEL TANK TO FILLER PIPE HOSE (See page FU-51)**

8. **INSTALL NO.1 FUEL TANK PROTECTOR SUB-ASSEMBLY (See page FU-51)**
9. **INSTALL REAR FLOOR SERVICE HOLE COVER (See page FU-52)**
10. **INSTALL REAR SEAT CUSHION ASSEMBLY LH (See page FU-53)**
11. **INSTALL REAR DOOR SCUFF PLATE LH (See page FU-52)**
12. **INSTALL FRONT DOOR SCUFF PLATE LH (See page FU-53)**
13. **CONNECT CABLE TO NEGATIVE BATTERY TERMINAL**
    Torque: 3.9 N*m (40 kgf*cm, 35 in.*lbf)
14. **CHECK FOR FUEL LEAKAGE (See page FU-7)**

FUEL PUMP RESISTOR

COMPONENTS

FU

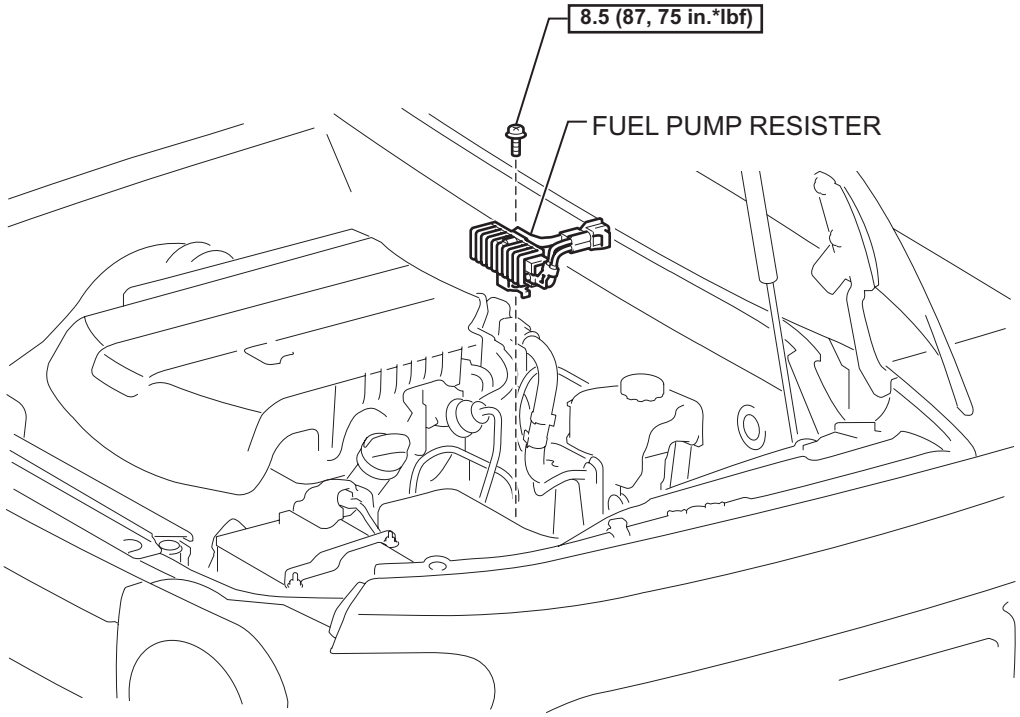

N*m (kgf*cm, ft*lbf) : Specified torque

T

A126459E01

REMOVAL

1. **DISCONNECT CABLE FROM NEGATIVE BATTERY TERMINAL**

2. **REMOVE FUEL PUMP RESISTOR**
   (a) Disconnect the connector.
   (b) Remove the bolt and the fuel pump resistor.

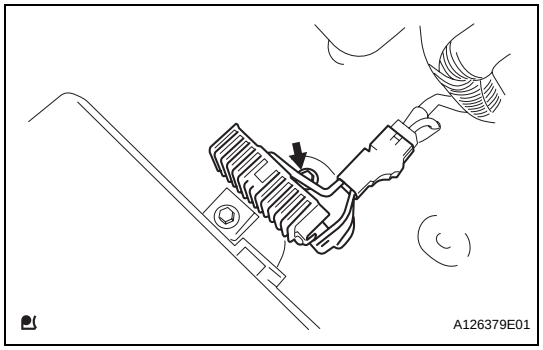

INSPECTION

1. **INSPECT FUEL PUMP RESISTER**
   (a) Check the resistance.
      (1) Using an ohmmeter, measure the resistance between the terminals.
      Standard resistance:
      0.941 to 0.999 Ω
      If the result is not as specified, replace the fuel pump resistor.

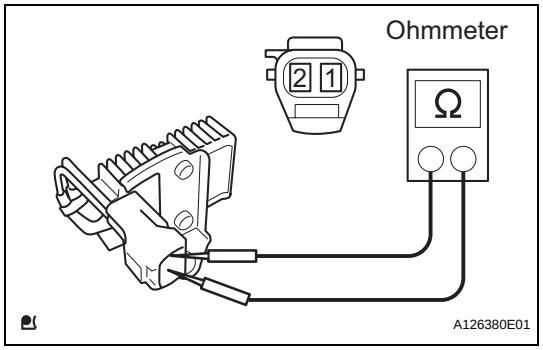

INSTALLATION

1. **INSTALL FUEL PUMP RESISTOR**
   (a) Install the fuel pump resistor with the bolt.
   Torque: 8.5 N*m (87 kgf*cm, 75 in.*lbf)
   (b) Connect the connector.

2. **CONNECT CABLE TO NEGATIVE BATTERY TERMINAL**
   Torque: 3.9 N*m (40 kgf*cm, 35 in.*lbf)

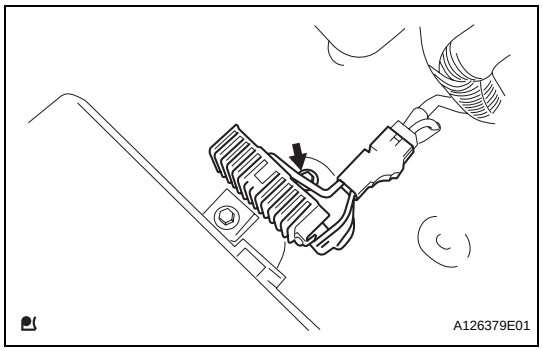

FU

FUEL TANK

COMPONENTS

FU

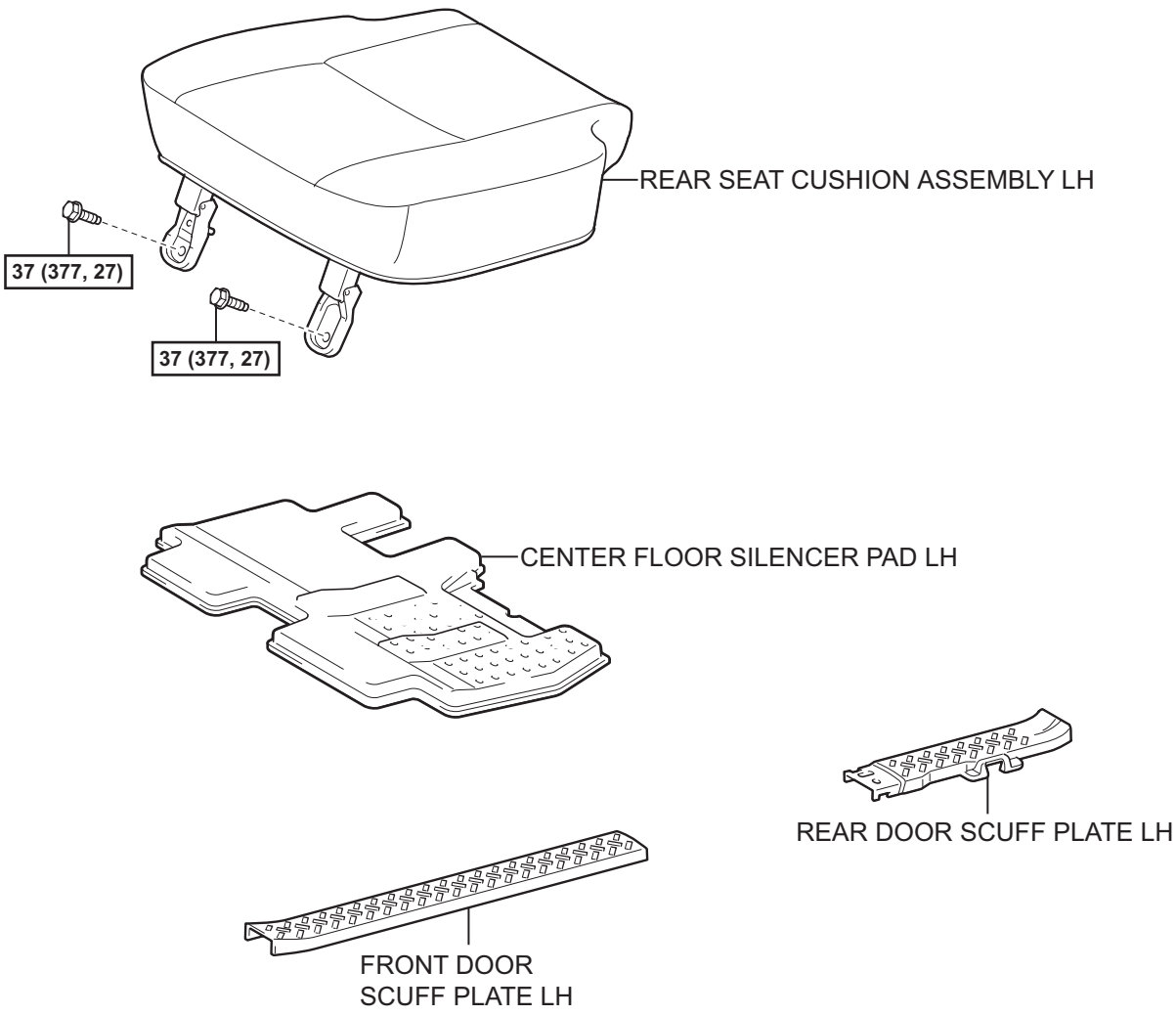

N*m (kgf*cm, ft*lbf) : Specified torque

P

A129922E01

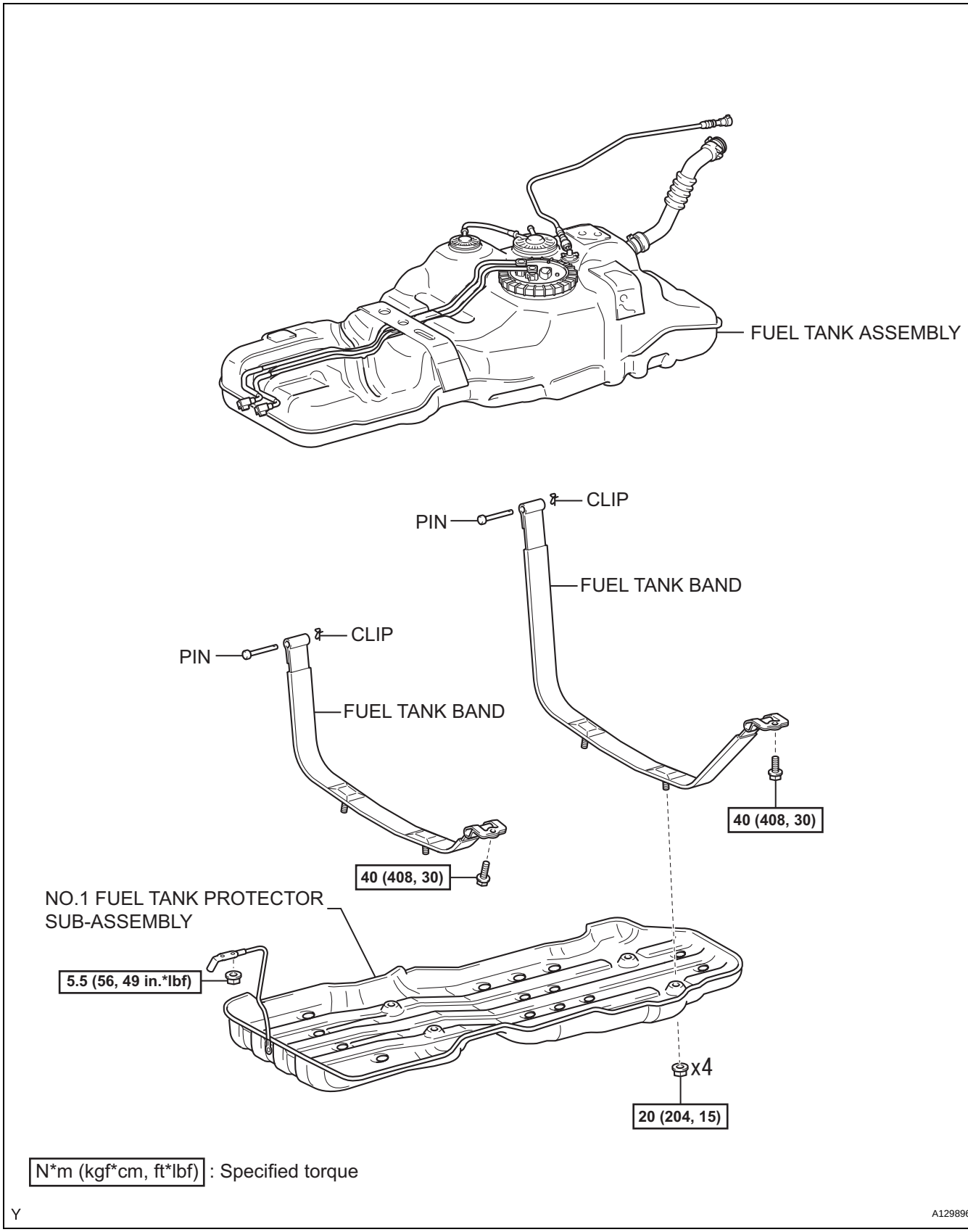

N*m (kgf*cm, ft*lbf) : Specified torque

Y

A129896E01

FU

FU

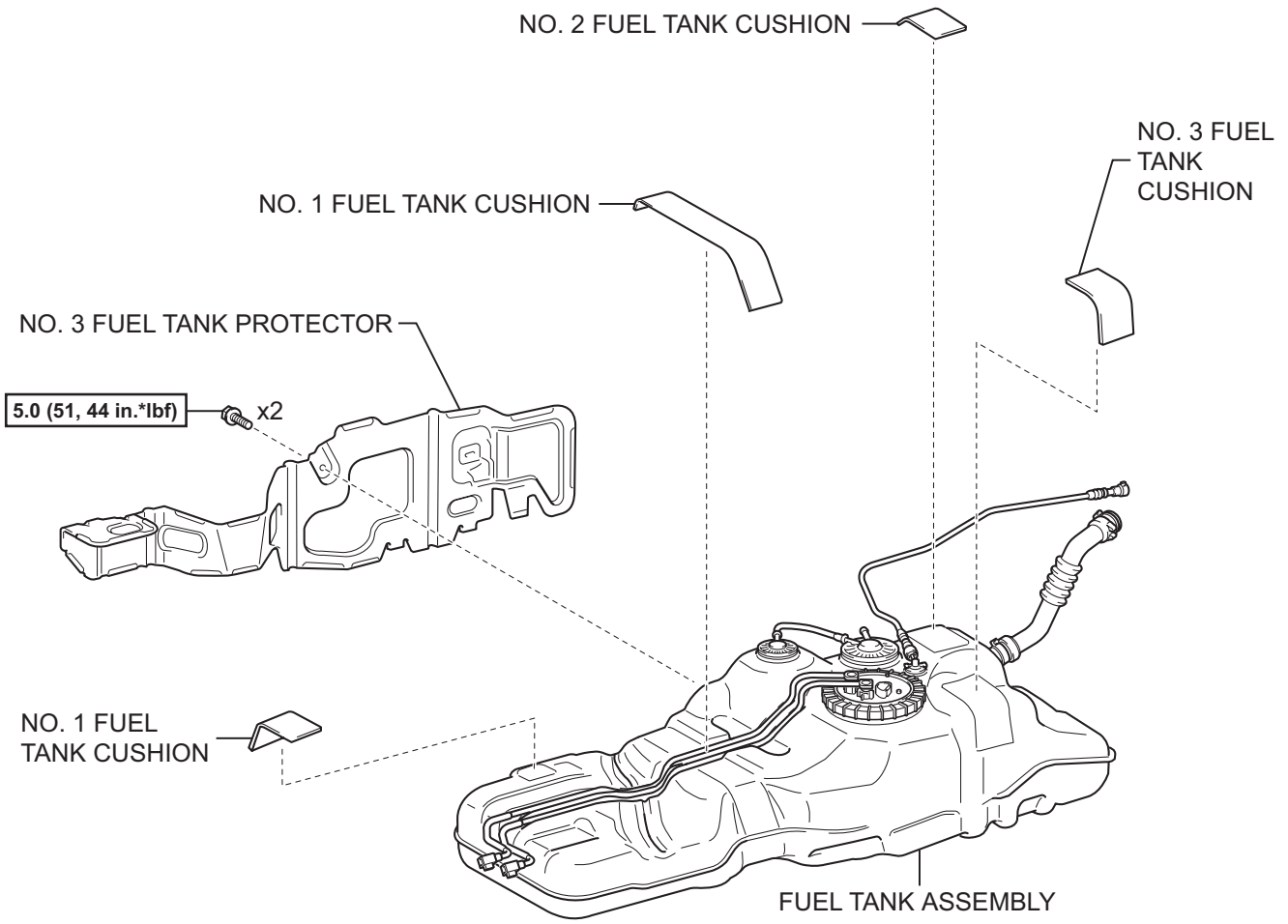

N*m (kgf*cm, ft*lbf) : Specified torque

Y

A129903E01

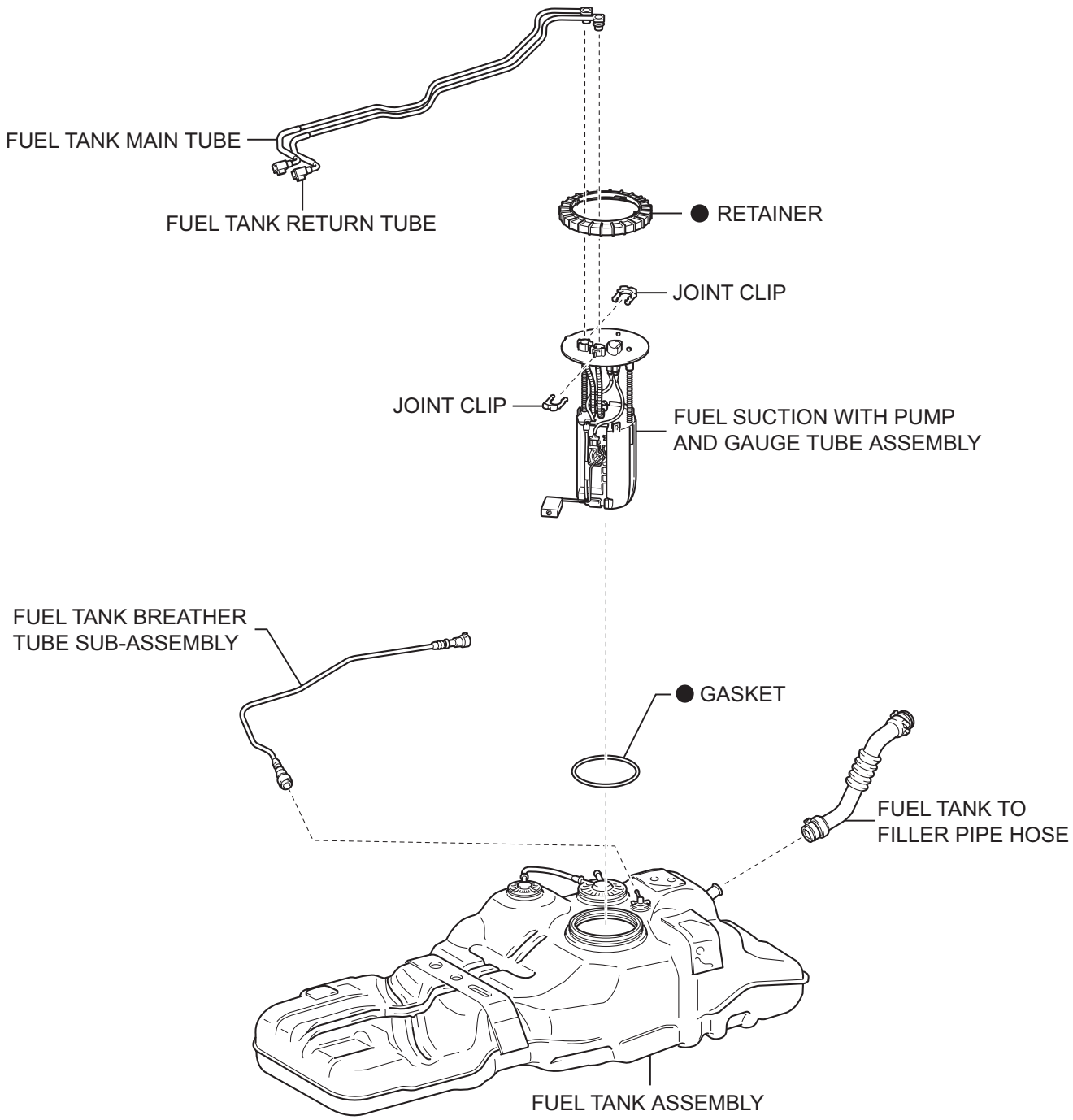

● Non-reusable part

Y

A129902E01

FU

REMOVAL

1. **DISCHARGE FUEL SYSTEM PRESSURE**
   (See page FU-1)

2. **DISCONNECT CABLE FROM NEGATIVE BATTERY TERMINAL**

3. **REMOVE FRONT DOOR SCUFF PLATE LH**
   (a) Disengage the 14 claws and remove the front door scuff plate.

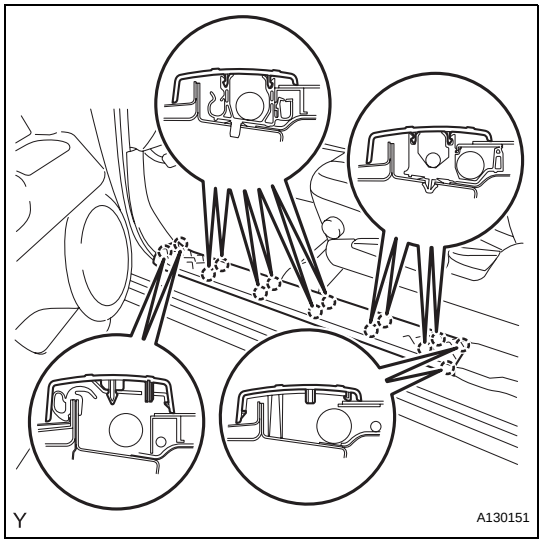

4. **REMOVE REAR DOOR SCUFF PLATE LH**
   (a) Disengage the 6 claws and remove the rear door scuff plate.

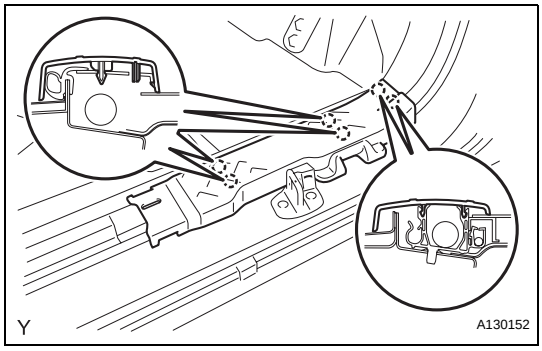

5. **REMOVE REAR SEAT CUSHION ASSEMBLY LH**
   (a) Remove the 2 bolts, then remove the rear seat cushion LH.

6. **REMOVE REAR FLOOR SERVICE HOLE COVER**
   (a) Pull back the floor carpet.

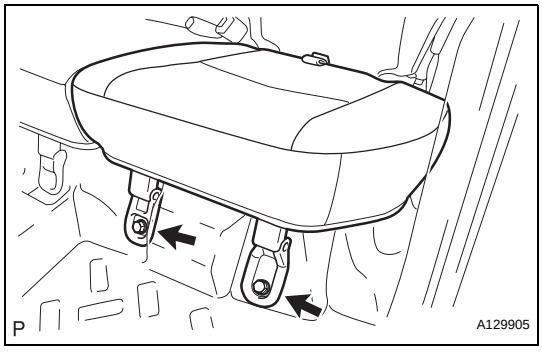

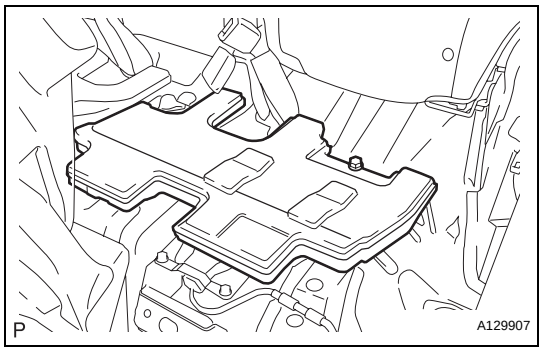

(b) Remove the center floor silencer pad LH.

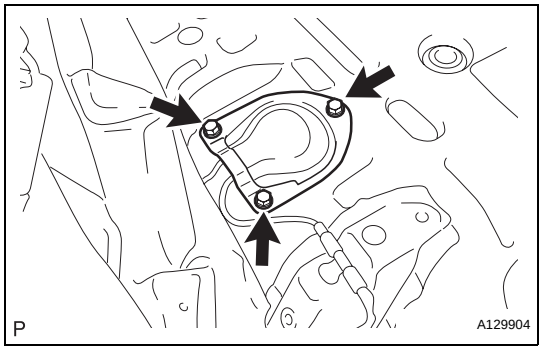

(c) Remove the 3 screws from the center floor.

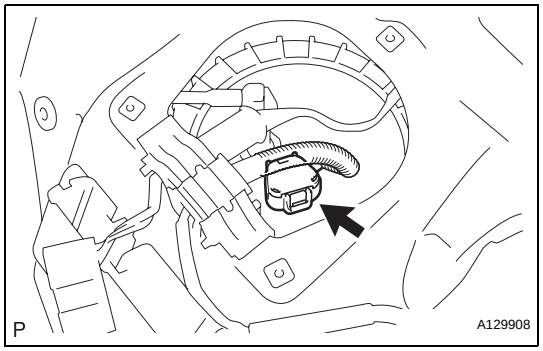

(d) Disconnect the connector.

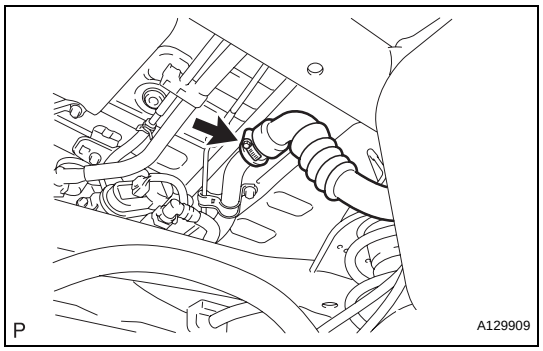

7. REMOVE FUEL TANK TO FILLER PIPE HOSE

(a) Loosen the clamp bolt, and disconnect the fuel tank to filler pipe hose.

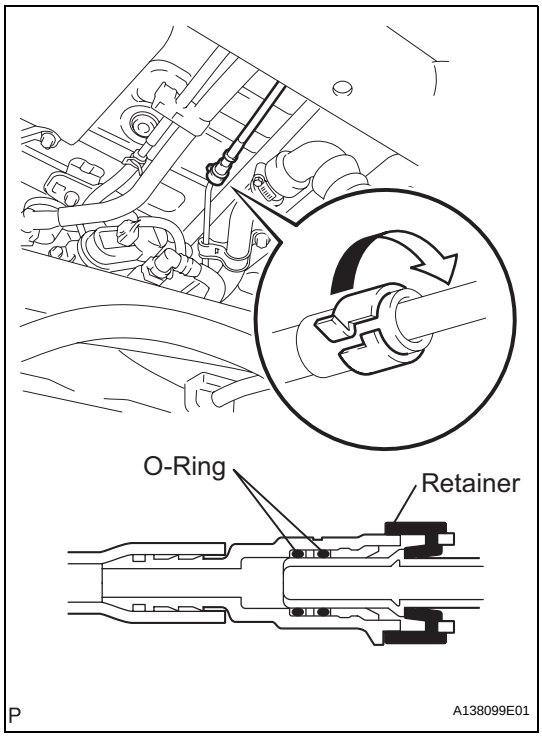

8. REMOVE NO. 1 FUEL TANK BREATHER TUBE SUB-ASSEMBLY

(a) Pinch the retainer to disengage the lock claws and pull out the No.1 fuel tank breather tube.

NOTICE:

- **Check that there is no dirt or mud around the quick connector before performing this work, because the quick connector has an O-ring which seals the pipe and the connector. Clean the connector if necessary.**
- **Do not use any tools in this work.**
- **Do not bend or twist the nylon tube.**
- **To protect the tube, cover it with a vinyl bag after disconnecting it.**
- **When the connector and the pipe are stuck, turn the retainer carefully to free and then disconnect the fuel tank tube.**

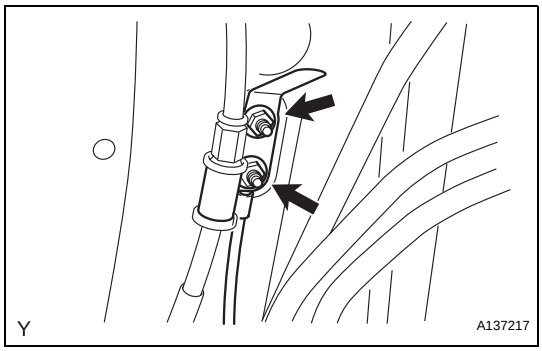

9. REMOVE NO. 1 FUEL TANK PROTECTOR SUB-ASSEMBLY

(a) Remove the 2 nuts and the fuel tank protector bracket. (for automatic transmission)

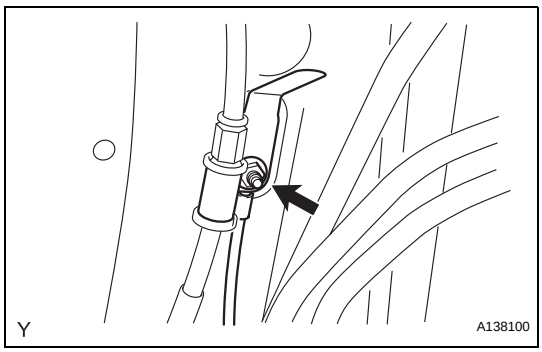

(b) Remove the nut and the fuel tank protector bracket. (for manual transmission)

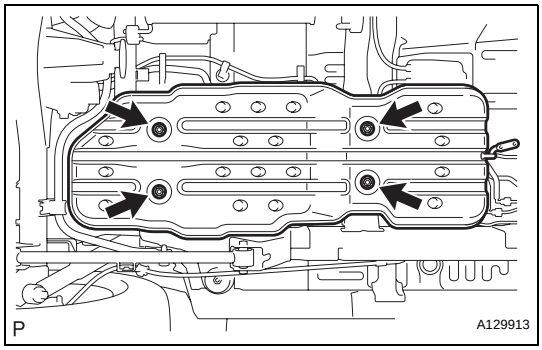

(c) Remove the 4 nuts and the fuel tank protector.

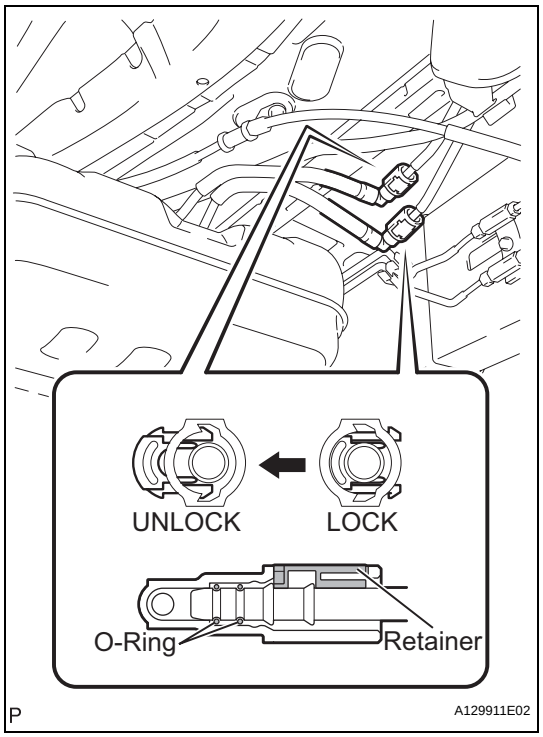

10. DISCONNECT FUEL TANK MAIN TUBE AND FUEL TANK RETURN TUBE

(a) Pinch the retainer to disengage the lock claws and pull out the 2 fuel tank tubes.

NOTICE:

- **Check that there is no dirt or mud around the quick connector before performing this work, because the quick connector has an O-ring which seals the pipe and the connector. Clean the connector if necessary.**
- **Do not use any tools in this work.**
- **Do not bend or twist the nylon tube.**
- **To protect the tube, cover it with a vinyl bag after disconnecting it.**
- **When the connector and the pipe are stuck, turn the retainer carefully to disconnect them.**

FU

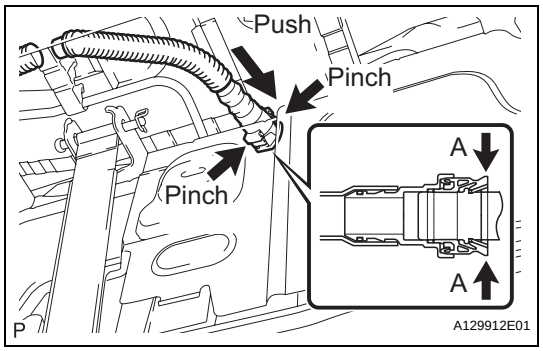

11. DISCONNECT FUEL TANK VENT HOSE

(a) Disconnect the fuel tank breather tube from the fuel tank.

(1) Push the connector deep inside.
(2) Pinch portion A, as shown in the illustration.
(3) Pull out the connector.

12. REMOVE FUEL TANK ASSEMBLY

(a) Hold the fuel tank using a mission jack.

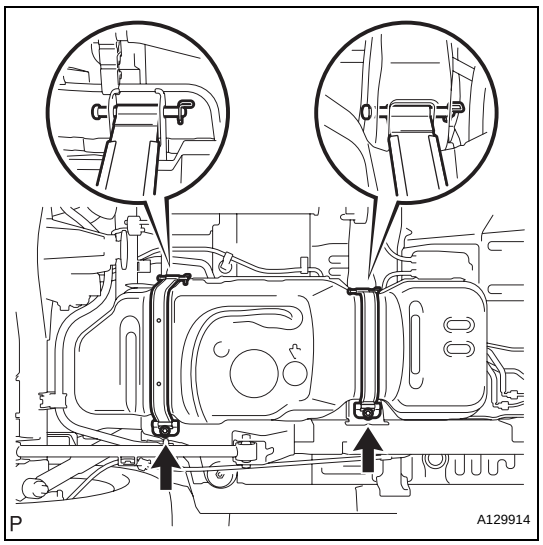

(b) Remove the 2 fuel tank bands.

(1) Remove the 2 bolts.
(2) Remove the 2 clips and 2 pins, then remove the 2 fuel tank bands.

13. REMOVE NO. 3 FUEL TANK PROTECTOR

(a) Remove the 2 bolts and disengage the 3 claws, then remove the No. 3 fuel tank protector.

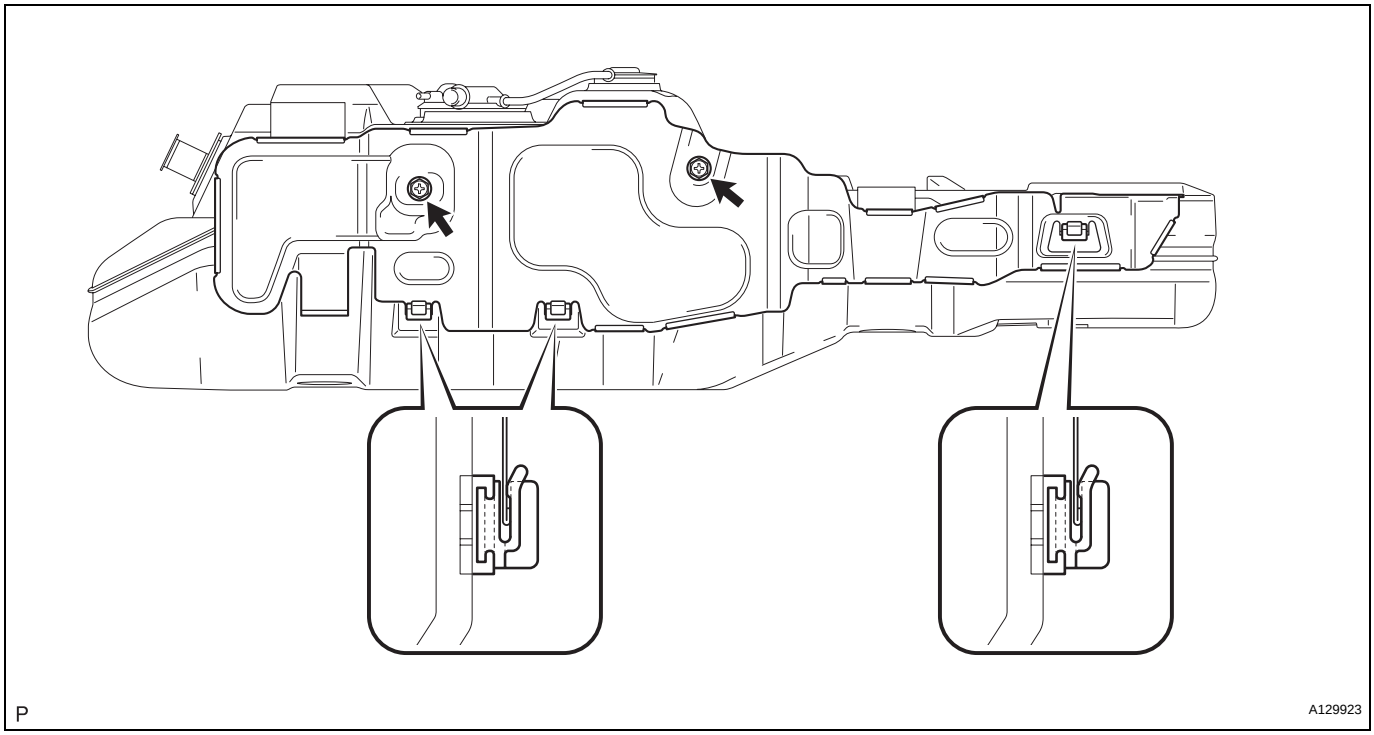

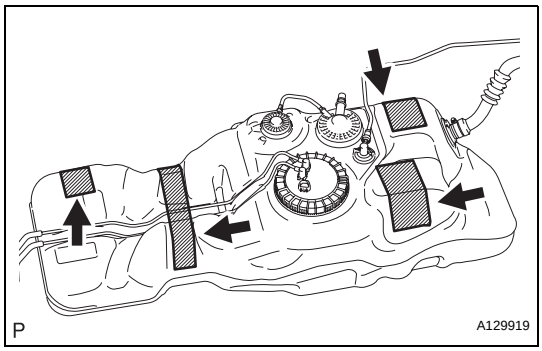

14. REMOVE FUEL TANK CUSHION

(a) Remove the 4 fuel tank cushions from the fuel tank.

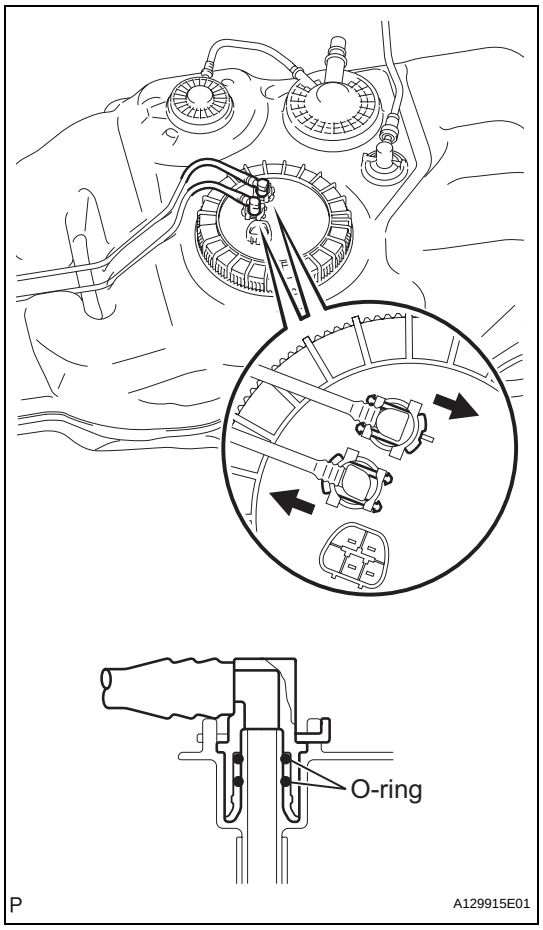

15. REMOVE FUEL TANK MAIN TUBE AND RETURN TUBE

(a) Remove the 2 joint clips, and pull out the 2 fuel tank tubes.

NOTICE:

- **Check that there is no dirt or mud around the quick connector before performing this work, because the quick connector has an O-ring which seals the pipe and the connector. Clean the connector if necessary.**
- **Do not use any tools in this work.**
- **Do not bend or twist the nylon tube by force.**
- **After disconnecting, cover the fuel tube joint with a vinyl bag.**
- **When the fuel tube joint and fuel suction plate are stuck, turn the fuel tank main tube carefully to free and then disconnect it. Likewise, disconnect the fuel tank return tube.**

16. REMOVE FUEL SUCTION WITH PUMP AND GAUGE TUBE ASSEMBLY (See page FU-29)

17. DRAIN FUEL

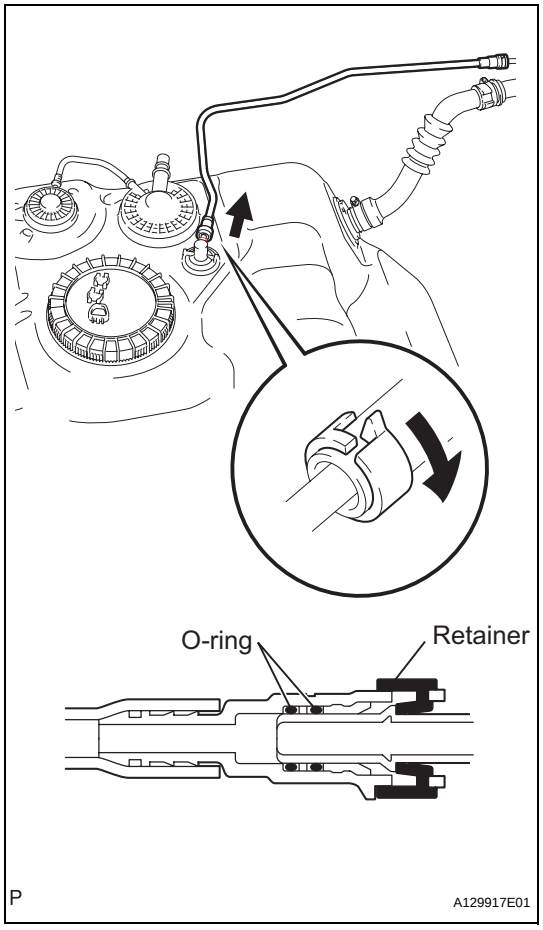

18. REMOVE FUEL TANK BREATHER TUBE SUB-ASSEMBLY

(a) Pinch the retainer to disengage the lock claws and pull out the fuel tank breather tube.

NOTICE:

- **Check that there is no dirt or mud around the quick connector before performing this work, because the quick connector has an O-ring which seals the pipe and the connector. Clean the connector if necessary.**
- **Do not use any tools in this work.**
- **Do not bend or twist the nylon tube.**
- **To protect the tube, cover it with a vinyl bag after disconnecting it.**
- **When the connector and the pipe are stuck, turn the fuel tank breather tube carefully to disconnect them.**

FU

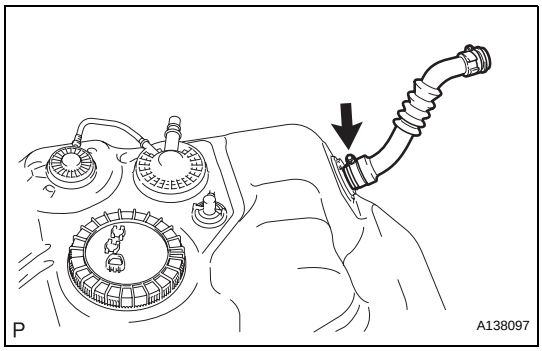

19. REMOVE FUEL TANK TO FILLER PIPE HOSE

(a) Loosen the clamp bolt, and disconnect the fuel tank to filler pipe hose.

INSTALLATION

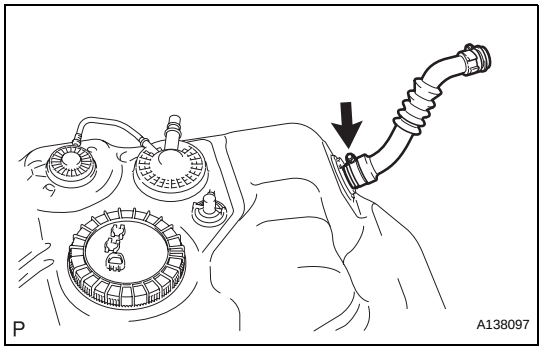

1. INSTALL FUEL TANK TO FILLER PIPE HOSE

(a) Connect a new fuel tank to filler pipe hose, as shown in the illustration, with the clamp.

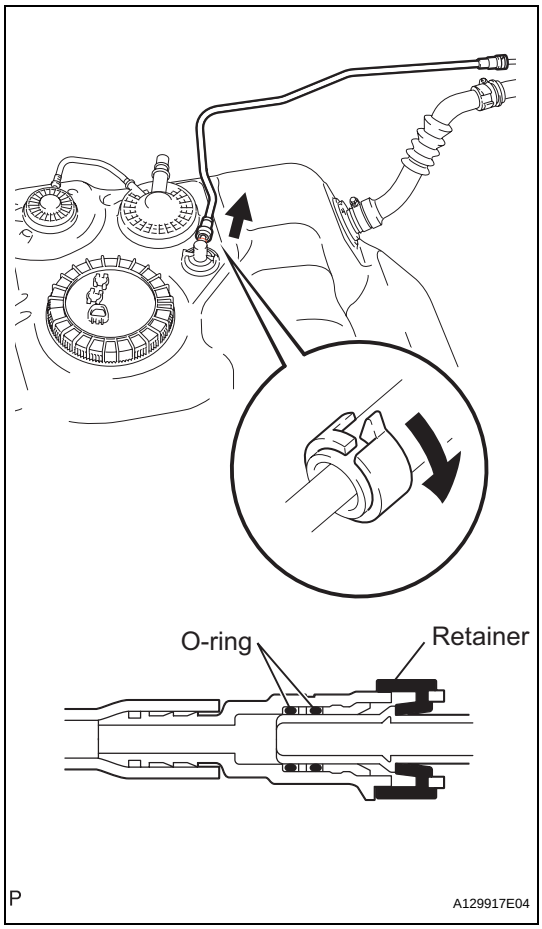

2. INSTALL FUEL TANK BREATHER TUBE SUB-ASSEMBLY

(a) Push the tube connector into the pipe until the connector makes a "click" sound and install the retainer.

NOTICE:

- **Check if there is any damage or foreign matter on the connected part of the pipe.**
- **After connecting, check if the pipe and the connector are securely connected by pulling them.**

3. INSTALL FUEL SUCTION WITH PUMP AND GAUGE TUBE ASSEMBLY (See page FU-34)

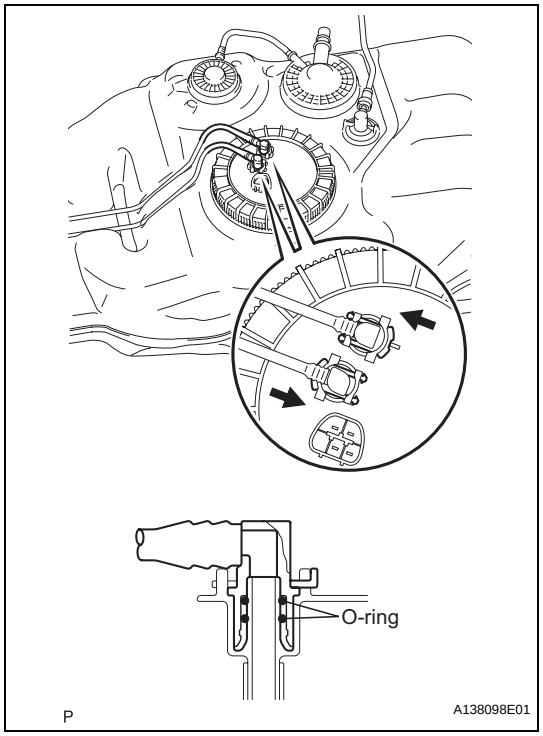

4. INSTALL FUEL TANK MAIN TUBE AND FUEL TANK RETURN TUBE

(a) Install the fuel tank main tube and return tube with the 2 joint clips.

NOTICE:

- **Check that there are no scratches or foreign matter around the connected part of the fuel tube joint and plug before performing this work.**
- **Check that the fuel tube joint is securely inserted into the end.**
- **Check that the tube joint clips are on the collar of the fuel tube joint.**
- **After installing the tube joint clip, check that the fuel tank main tube and return tube can be pulled out.**

FU

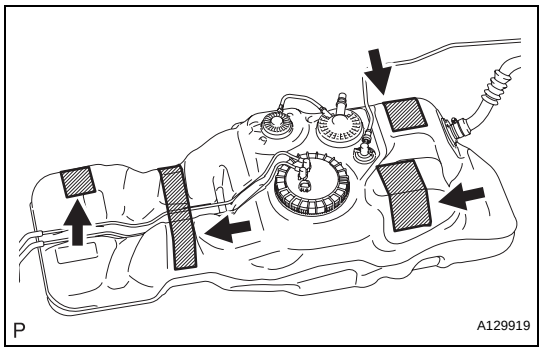

5. INSTALL FUEL TANK CUSHION

(a) Install 4 new fuel tank cushions the fuel tank.

6. INSTALL NO.3 FUEL TANK PROTECTOR

(a) Install the No. 3 fuel tank protector with the 2 bolts and 3 claws.

Torque: 5.0 N*m (51 kgf*cm, 44 in.*lbf)

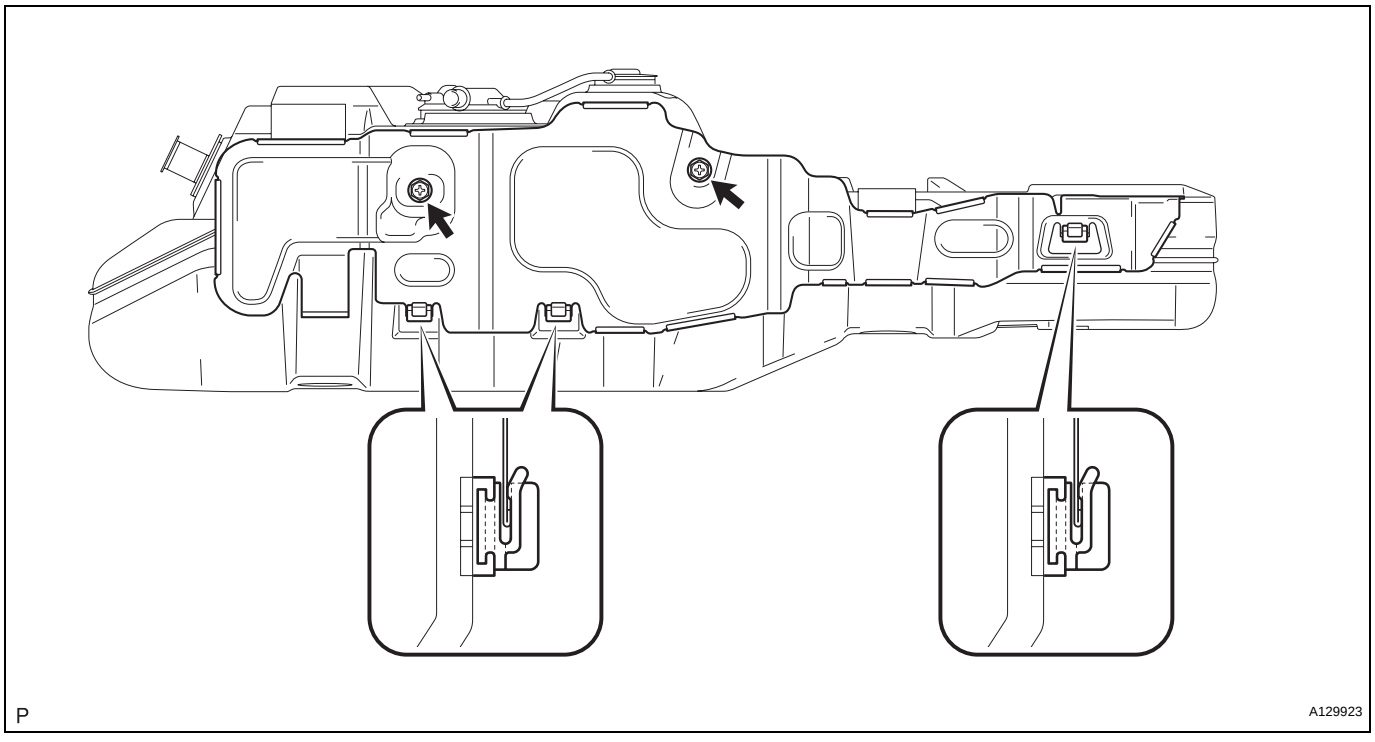

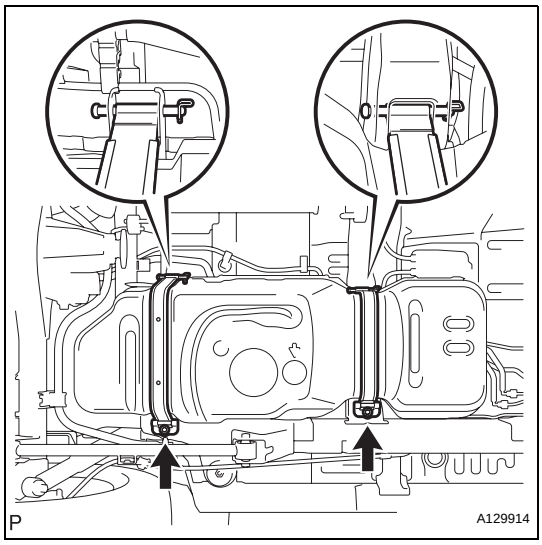

7. INSTALL FUEL TANK ASSEMBLY

(a) Set a mission jack to the fuel tank.

(b) Install the fuel tank and 2 fuel tank bands with the 2 clips, 2 pins and the 2 bolts.
Torque: 40 N*m (408 kgf*cm, 30 ft.*lbf)

FU

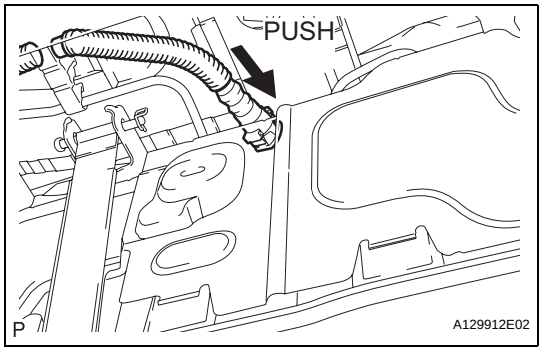

8. INSTALL FUEL TANK VENT HOSE

(a) Connect the fuel tank vent hose.

(1) Align the fuel tank vent hose connector with the pipe, then push in the fuel tank vent connector until the retainer makes a "click" sound to connect the fuel tank vent hose to the charcoal canister.
NOTICE:
- **Check that there are no scratches or foreign matter on the disconnected parts of the fuel tank vent connector and pipe before performing the work.**
- **After connecting the fuel tank vent hose, check that the fuel tank vent hose is securely connected by pulling the quick connector.**

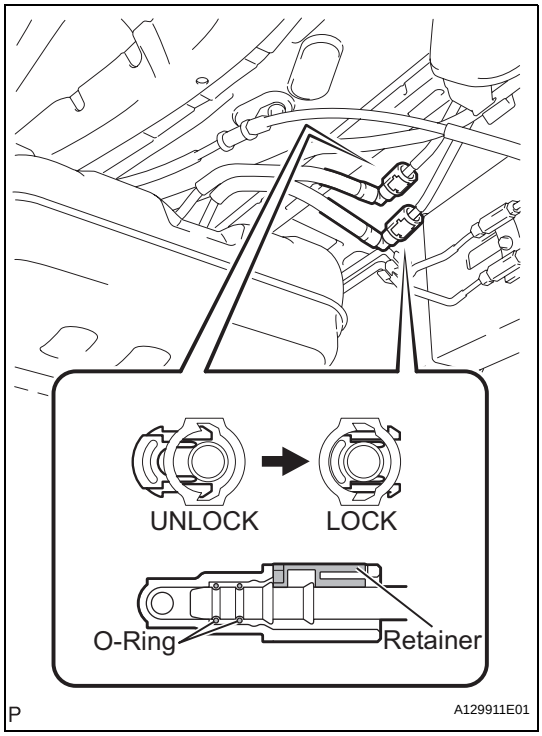

9. CONNECT FUEL TANK MAIN TUBE AND FUEL TANK RETURN TUBE

(a) Push the tube connector into the pipe until the connector makes "click" sound.
NOTICE:
- **Check that there is no damage or foreign objects on the connected part of the pipe.**
- **After connecting, check if the pipe and the connector are securely connected by pulling them.**

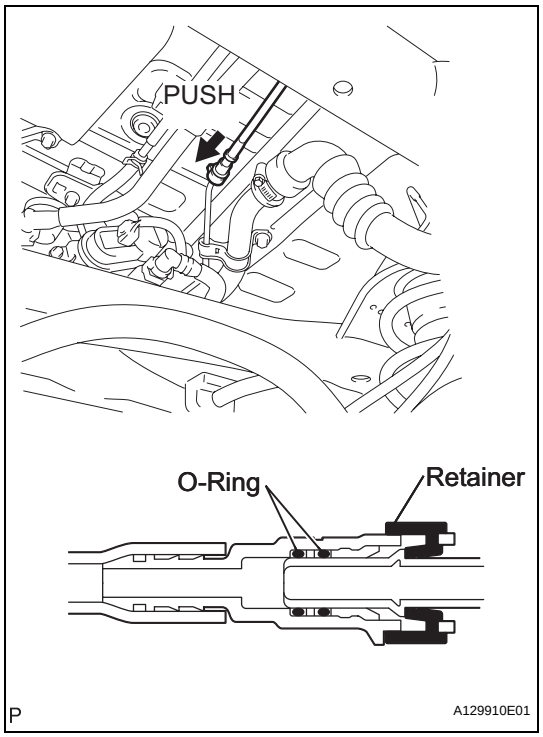

10. CONNECT FUEL TANK BREATHER TUBE SUB-ASSEMBLY

(a) Push the tube connector into the pipe until the connector makes "click" sound.
NOTICE:
- **Check that there is no damage or foreign objects on the connected part of the pipe.**
- **After connecting, check if the pipe and the connector are securely connected by pulling them.**

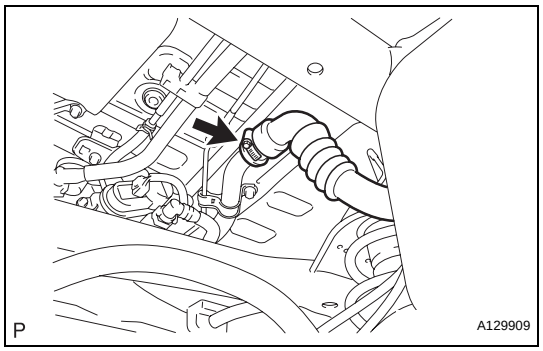

11. CONNECT FUEL TANK TO FILLER PIPE HOSE

(a) Connect the fuel tank to filler pipe hose, as shown in the illustration, with the clamp.

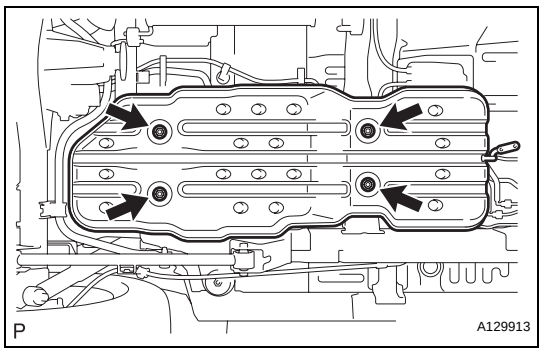

12. INSTALL NO. 1 FUEL TANK PROTECTOR SUB-ASSEMBLY

(a) Install the fuel tank protector with the 4 nuts.
Torque: 20 N*m (204 kgf*cm, 15 ft.*lbf)

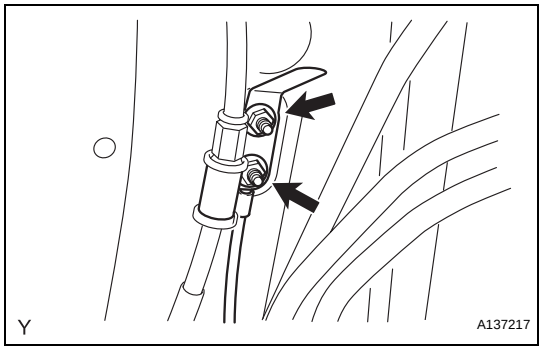

(b) Install the fuel tank protector bracket with the 2 nuts. (for automatic transmission)
Torque: 5.5 N*m (56 kgf*cm, 49 in.*lbf)

FU

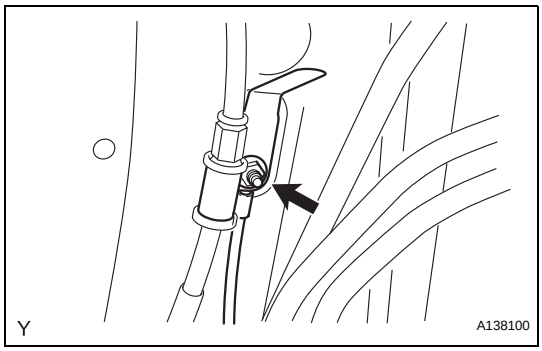

(c) Install the fuel tank protector bracket with the nut. (for manual transmission)
Torque: 5.5 N*m (56 kgf*cm, 49 in.*lbf)

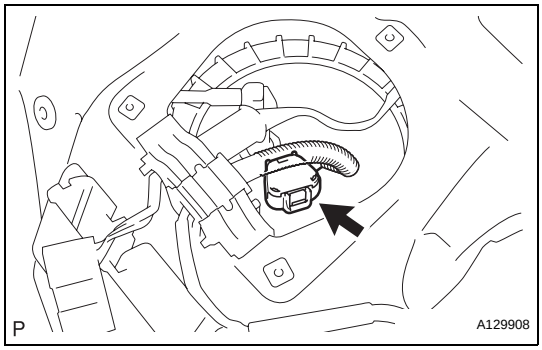

13. INSTALL REAR FLOOR SERVICE HOLE COVER

(a) Connect the connector.

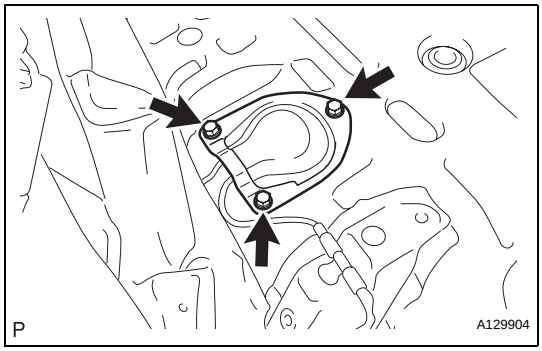

(b) Install the 3 screws from the center floor.

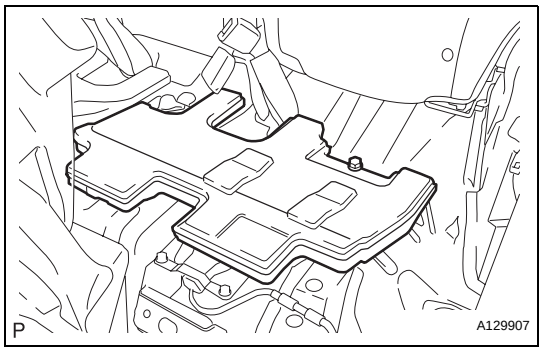

(c) Install the center floor silencer pad LH.
(d) Install the floor carpet.

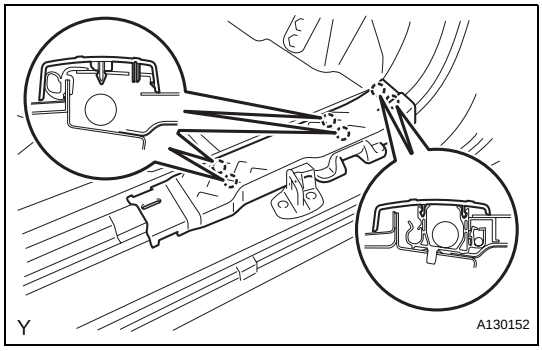

14. INSTALL REAR DOOR SCUFF PLATE LH

(a) Engage the 6 claws and install the rear door scuff plate.

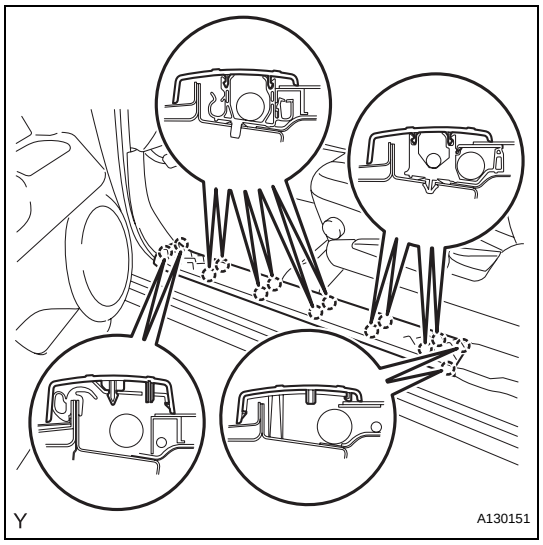

15. INSTALL FRONT DOOR SCUFF PLATE LH

(a) Engage the 14 claws and install the front door scuff plate.

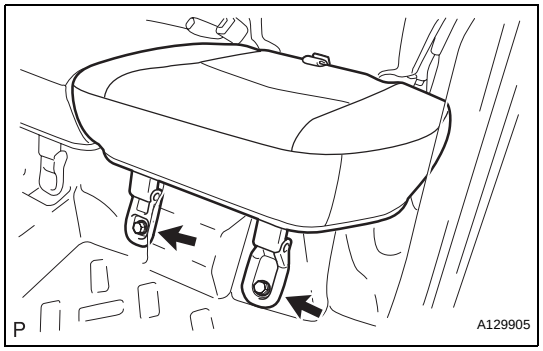

16. INSTALL REAR SEAT CUSHION ASSEMBLY LH

(a) Install the rear seat cushion assembly LH with the 2 bolts.

Torque: 37 N*m (377 kgf*cm, 27 ft.*lbf)

17. CONNECT CABLE TO NEGATIVE BATTERY TERMINAL

Torque: 3.9 N*m (40 kgf*cm, 35 in.*lbf)

18. CHECK FOR FUEL LEAKAGE (See page FU-7)

FU

HORN SYSTEM

PRECAUTION

1. DISCONNECT AND RECONNECT CABLE OF NEGATIVE BATTERY TERMINAL

NOTICE:

When disconnecting the cable from the negative (-) battery terminal, initialize the following systems after the cable is reconnected.

System Name	See procedure
METER / GAUGE SYSTEM	See page ME-10

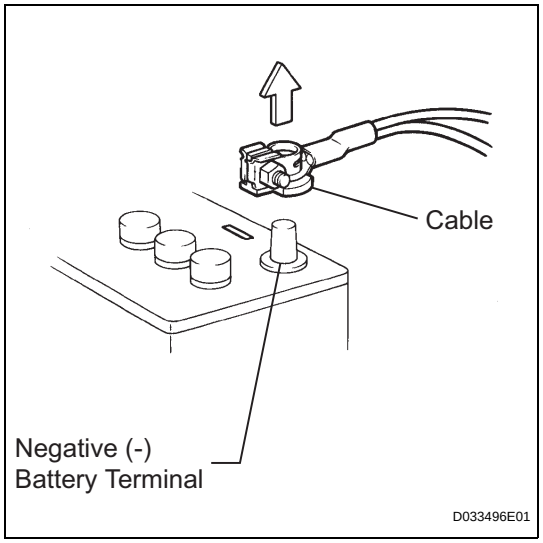

(a) Before performing electronic work, disconnect the cable from the negative (-) battery terminal in order to prevent it from shorting and burning out.

(b) Before disconnecting and reconnecting the battery cable, turn the ignition switch OFF and the headlight dimmer switch OFF. Then loosen the terminal nut completely. Do not damage the cable or terminal.

(c) When the battery cable is disconnected, the clock and radio settings and stored DTCs are erased. Therefore, before disconnecting the battery cable, make a notes of them.

PARTS LOCATION

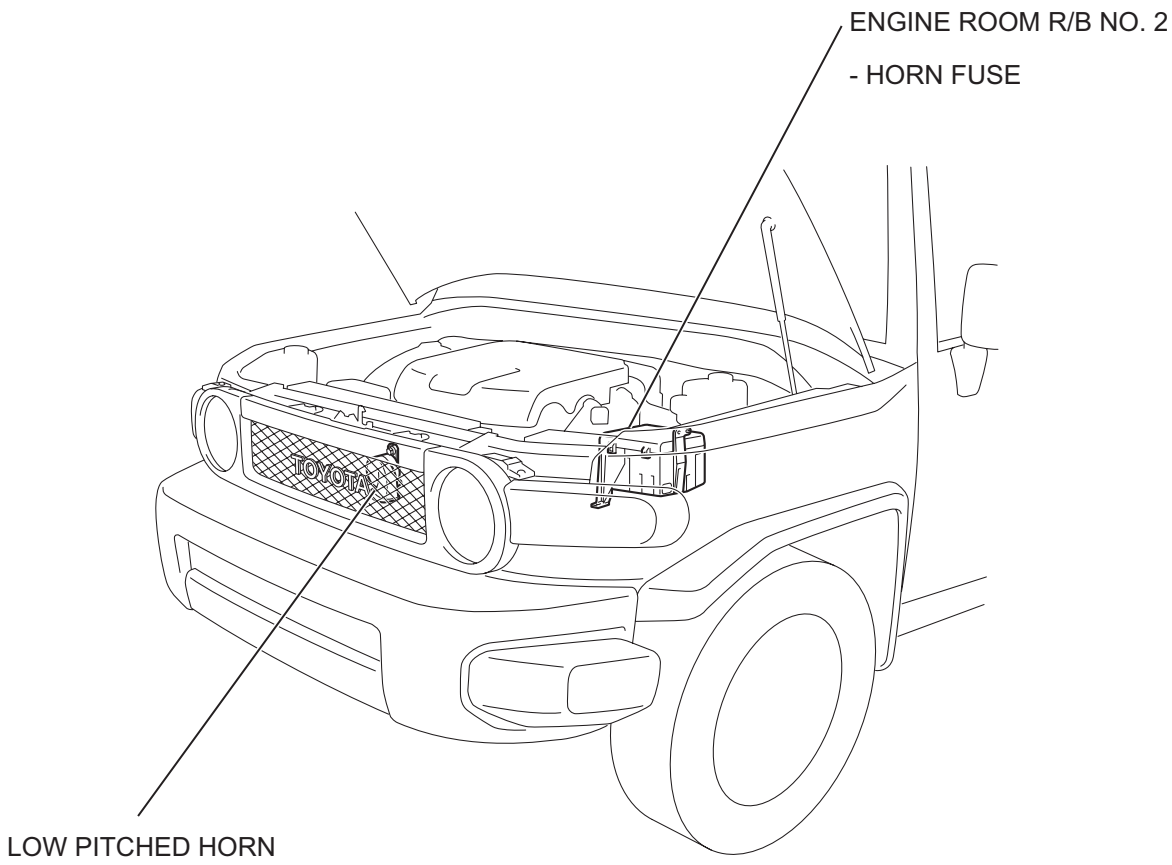

HO

Y

B136054E01

W/O STEERING SWITCH

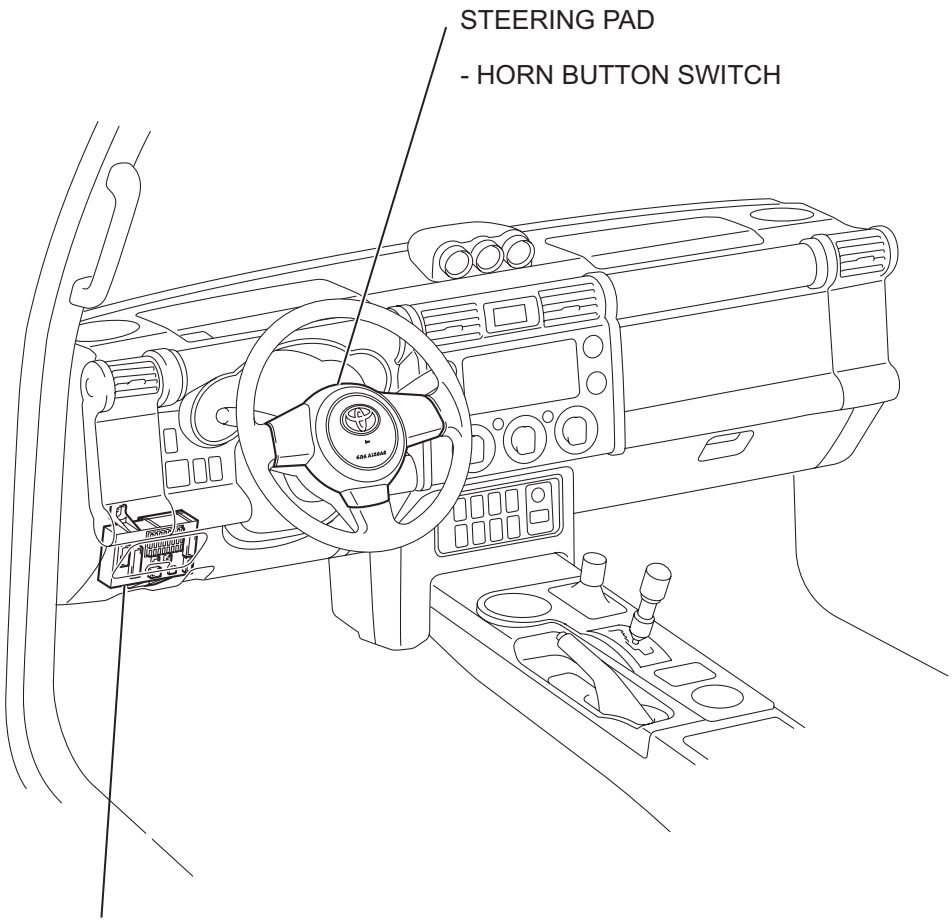

W/ STEERING SWITCH

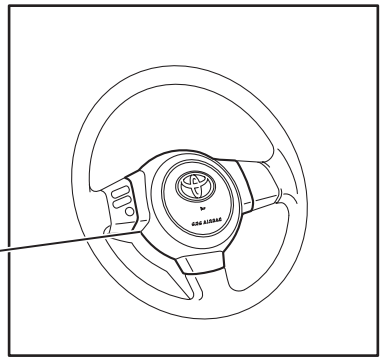

HO

Y

B136055E01

SYSTEM DIAGRAM

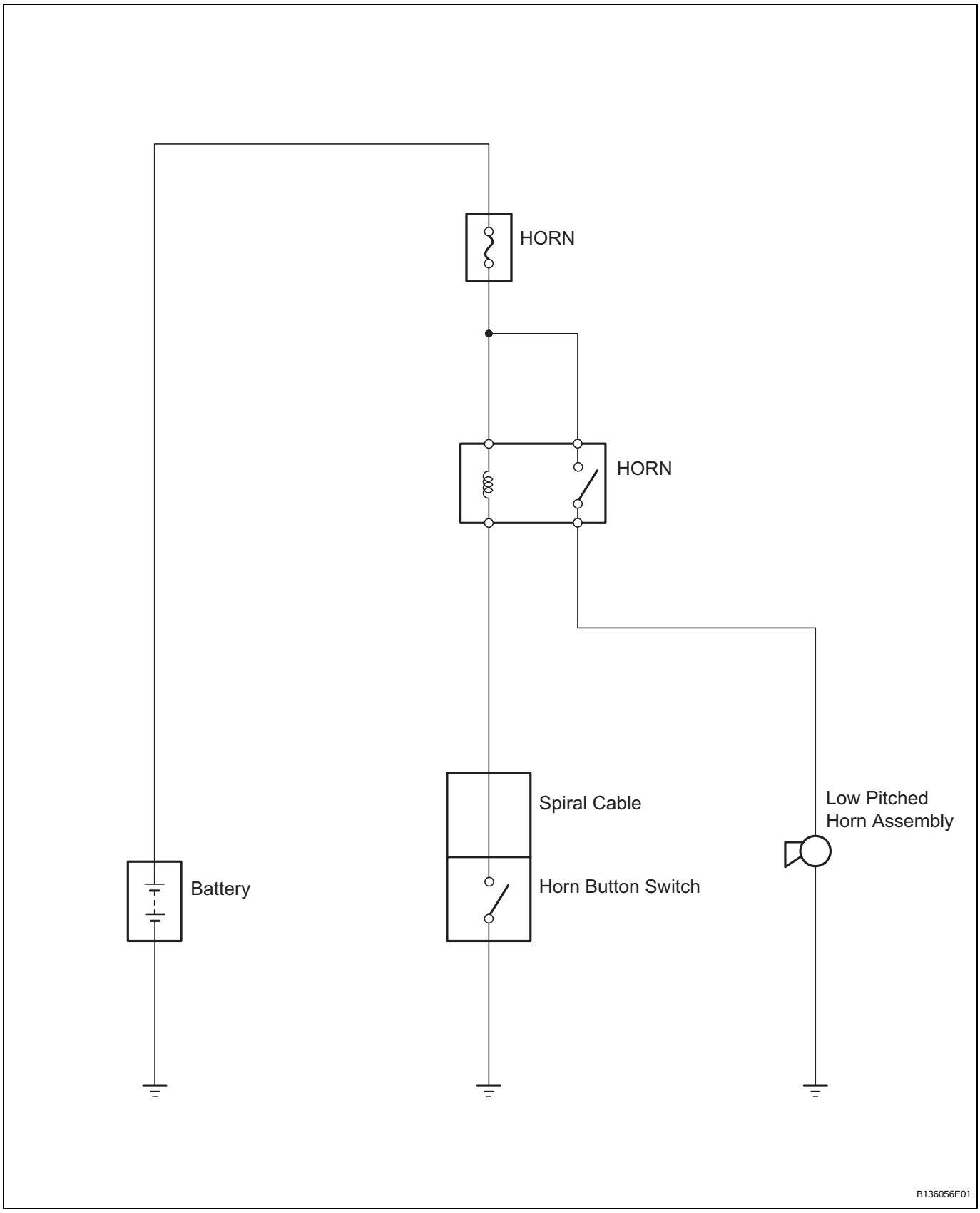

PROBLEM SYMPTOMS TABLE

HINT:
Use the table below to help determine the causes of the problem symptom. The potential causes of the symptoms are listed in order of probability in the "Suspected Area" column of the table. Check each symptom by checking the suspected areas in the order they are listed. Replace parts as necessary.

Horn system

Symptom	Suspected area	See page
Horn does not sound	HORN fuse	HO-2
	HORN relay	HO-7
	Low pitched horn assembly	HO-10
	Horn pad (Horn switch)	RS-346
	Wire harness	-

HORN RELAY

COMPONENTS

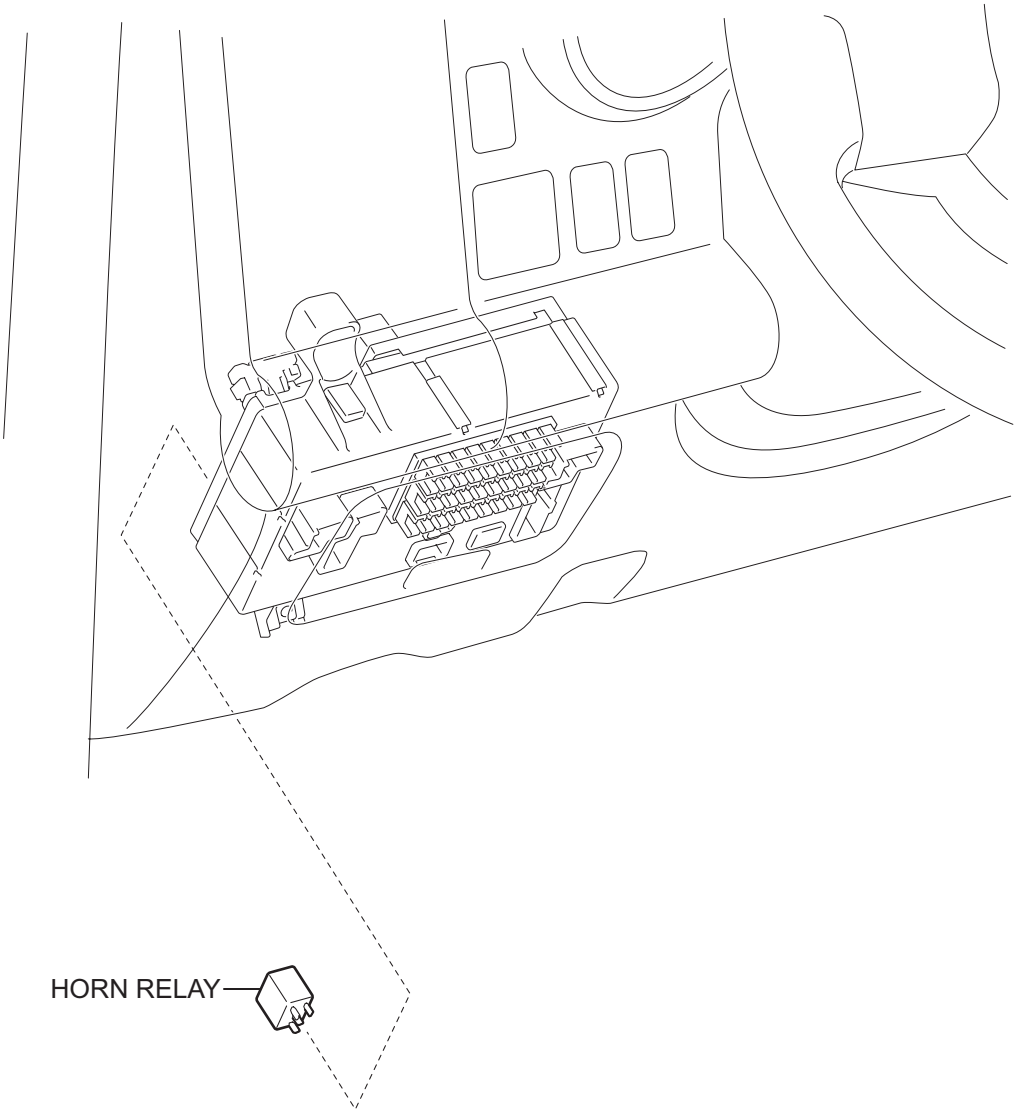

T

B138428E01

REMOVAL

1. DISCONNECT CABLE FROM NEGATIVE BATTERY TERMINAL

2. REMOVE HORN RELAY

(a) Remove the horn relay.

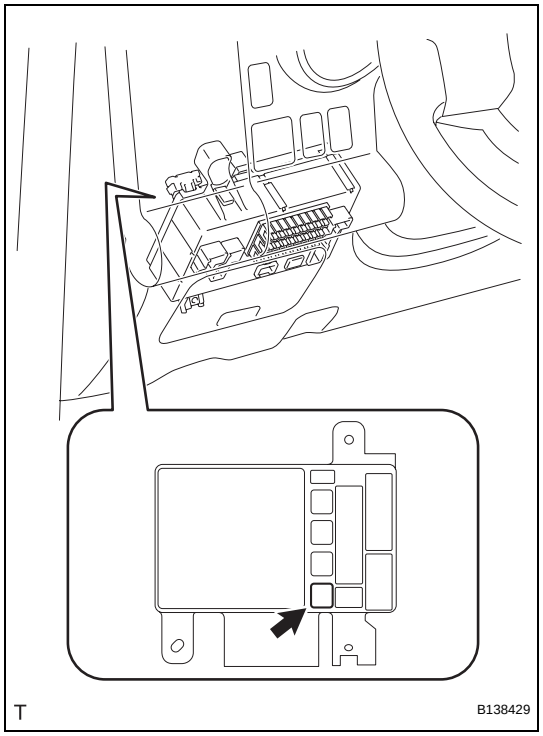

INSPECTION

1. INSPECT HORN RELAY

(a) Check the resistance.

(1) Using an ohmmeter, measure the resistance between the terminals.

Standard resistance

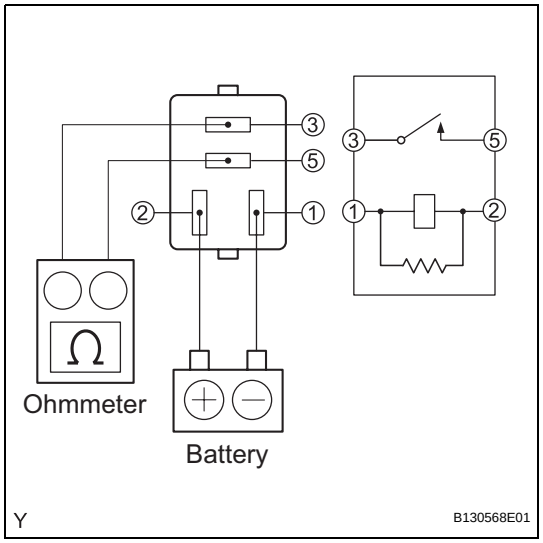

Tester Connection	Specified Condition
3 - 5	10 kΩ or higher
	Below 1 Ω (Battery voltage applied to terminals 1 and 2)

If the result is not as specified, replace the horn relay.

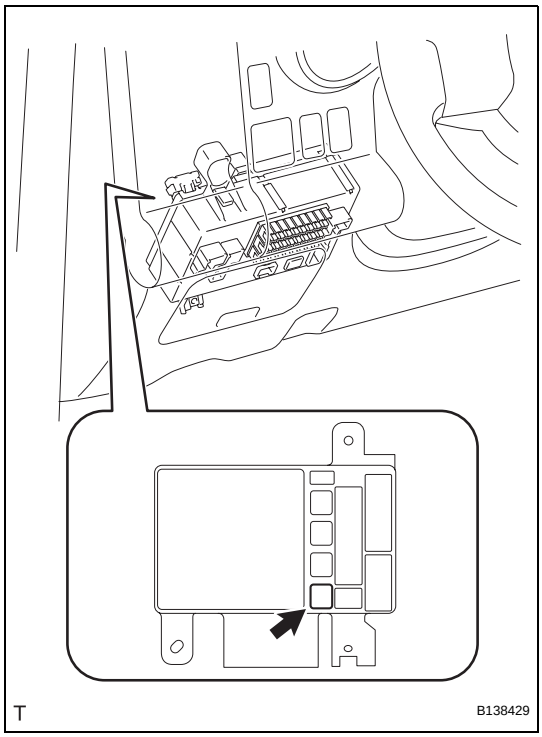

INSTALLATION

1. **INSTALL HORN RELAY**
   (a) Install the horn relay.

2. **CONNECT CABLE TO NEGATIVE BATTERY TERMINAL**
   Torque: 3.9 N*m (40 kgf*cm, 35 in.*lbf)

LOW PITCHED HORN

COMPONENTS

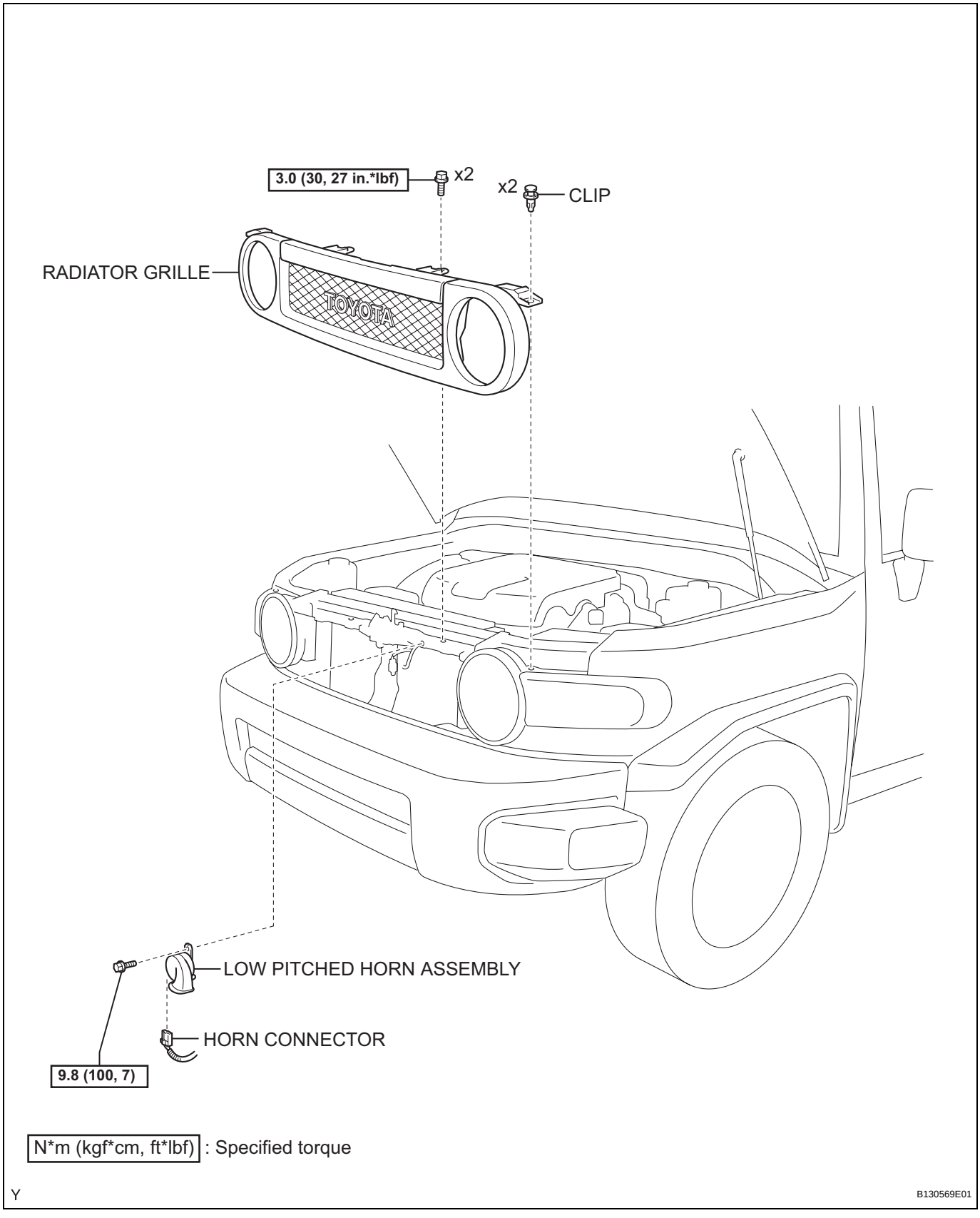

REMOVAL

1. **DISCONNECT CABLE FROM NEGATIVE BATTERY TERMINAL**
2. **REMOVE RADIATOR GRILLE (See page ET-4)**
3. **REMOVE LOW PITCHED HORN ASSEMBLY**
   (a) Disconnect the horn connector.
   (b) Remove the bolt and the low pitched horn.

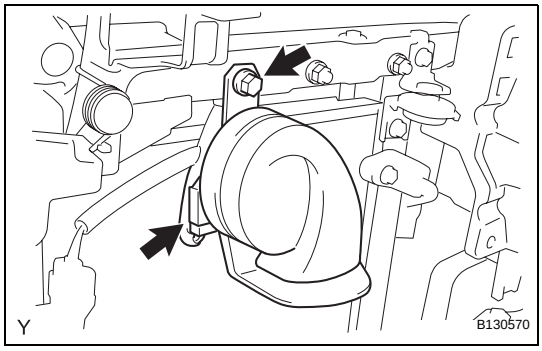

INSPECTION

1. **INSPECT LOW PITCHED HORN ASSEMBLY**
   (a) Check the operation.
      (1) Apply battery voltage to the terminal and bracket, and check that the horn sounds.
      Standard

Condition	Standard
Positive battery - Terminal 1 (IG+) Negative battery - Horn bracket	Horn sounds

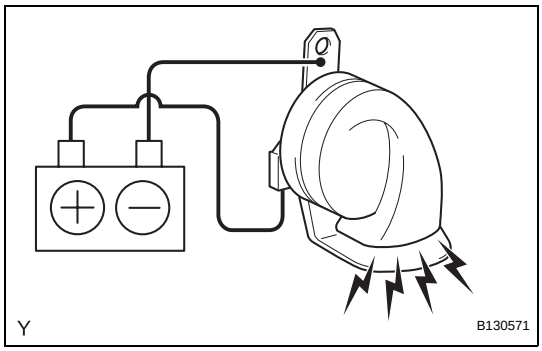

If the result is not as specified, replace the low pitched horn.

INSTALLATION

1. **INSTALL LOW PITCHED HORN ASSEMBLY**
   (a) Install the low pitched horn with the bolt.
   Torque:
   9.8 N*m (100 kgf*cm, 7 ft.*lbf)
   NOTICE:
   Do not place the low pitched horn over the stopper of the body.
   (b) Connect the horn connector.
2. **INSTALL RADIATOR GRILLE (See page ET-11)**
3. **CONNECT CABLE TO NEGATIVE BATTERY TERMINAL**
   Torque: 3.9 N*m (40 kgf*cm, 35 in.*lbf)

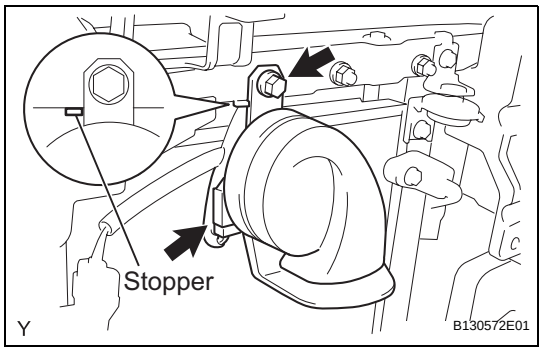

HO

IGNITION SYSTEM

PARTS LOCATION

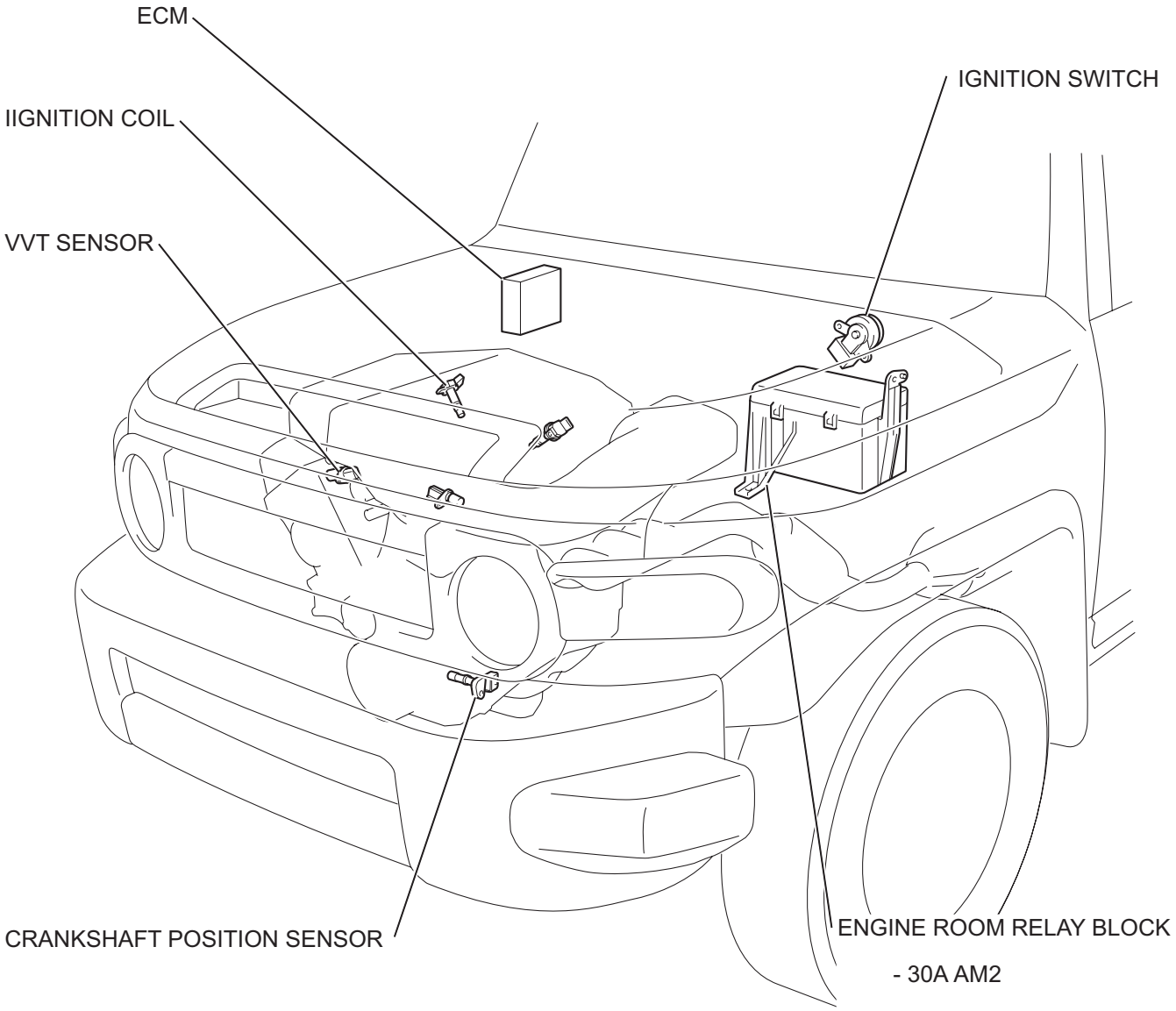

SYSTEM DIAGRAM

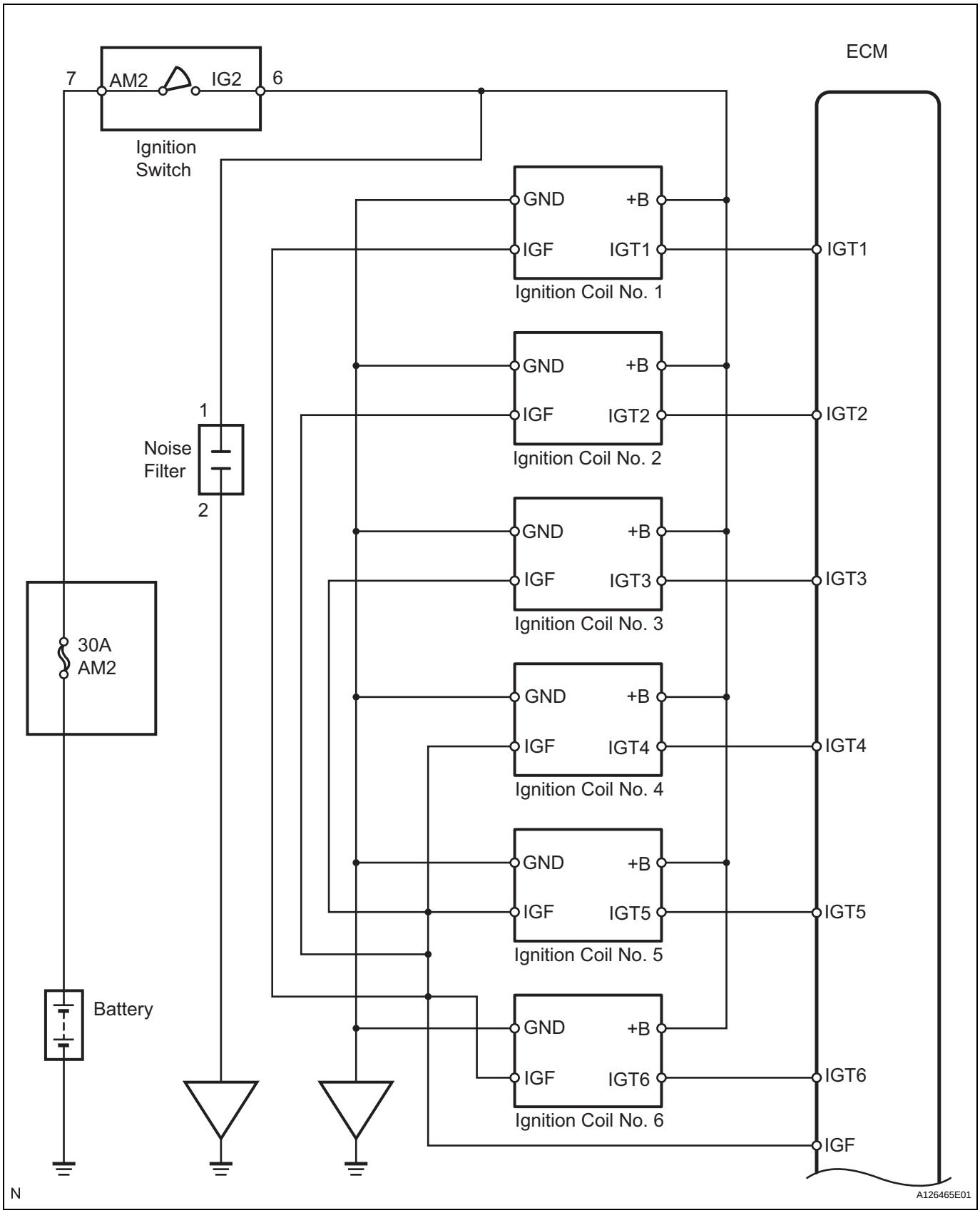

IG

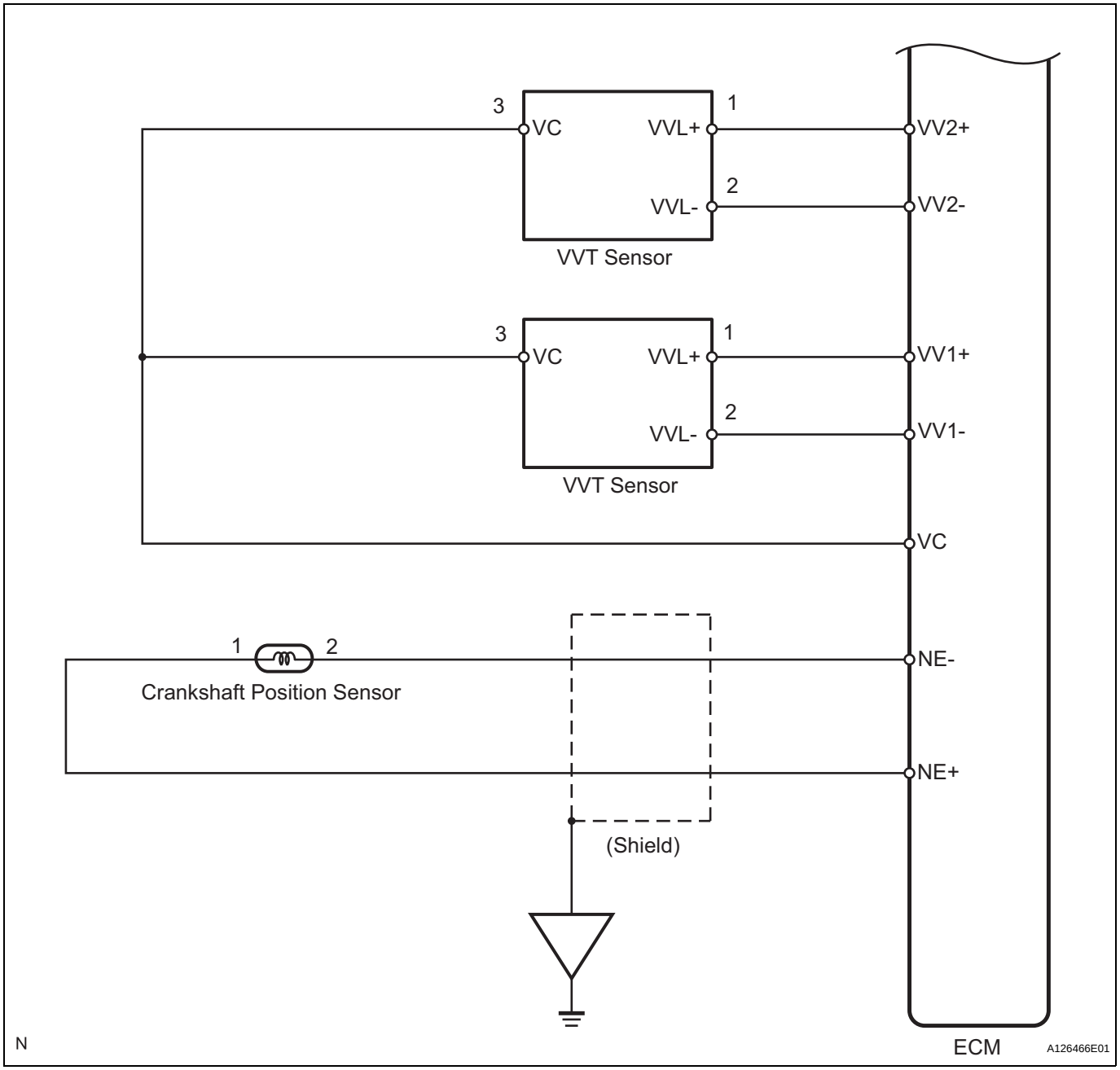
3
VC
VVL+
1
VV2+
VVL-
2
VV2-
VVT Sensor
3
VC
VVL+
1
VV1+
VVL-
2
VV1-
VVT Sensor
VC
1
2
Crankshaft Position Sensor
NE-
NE+
(Shield)
ECM
N
A126466E01

IG

ON-VEHICLE INSPECTION

1. CHECK IGNITION COIL ASSEMBLY AND PERFORM SPARK TEST

(a) Check for DTCs.

NOTICE:

If any DTC is present, perform troubleshooting in accordance with a procedure for that DTC.

(b) Check that sparks occur.

(1) Remove the ignition coils.

(2) Using a 16 mm plug wrench, remove the spark plugs.

(3) Install the spark plugs onto the ignition coils, and connect the ignition coil connectors.

(4) Disconnect the 6 injector connectors.

(5) Ground the spark plugs.

(6) Check that sparks occur at each spark plug while the engine is being cranked.

NOTICE:

- **Be sure to ground the spark plugs when checking.**
- **Replace any ignition coils that have been subjected to any physical impact.**
- **Do not crank the engine for more than 2 seconds.**

If sparks do not occur, perform the following test:

(c) Spark test flow chart.

(1) Check that the wire harness side connector of ignition coil with igniter is securely connected.

Result

Result	Proceed to
NG	Connect securely.
OK	Go to next step.

(2) Perform the spark test on each ignition coil with igniter.

1.Replace the ignition coil with igniter with a functioning one.

2.Perform the spark test again.

Result

Result	Proceed to
OK	Replace ignition coil with igniter.
NG	Go to next step.

(3) Check that the power is supplied to the ignition coil.

1.Turn the ignition switch ON.

2.Check that the positive (+) battery voltage is applied to the positive (+) terminal of the ignition coil.

Result

Result	Proceed to
NG	Check wiring between ignition switch and ignition coil assembly.
OK	Go to next step.

(4) Measure the output voltage of the VVT sensor.
1.Inspect the VVT sensor in accordance with the procedure (See page ES-192).
Result

Result	Proceed to
NG	Replace VVT sensor
OK	Go to next step.

(5) Check the resistance in crankshaft position sensor.
Standard resistance

Standard condition	Specified condition
at 20°C (68°F)	1,850 to 2,450 Ω

Result

Result	Proceed to
NG	Replace the crankshaft position sensor.
OK	Go to next step.

(6) Check the IGT signal from the ECM.
Result

Result	Proceed to
NG	Check ECM
OK	Repair wiring between ignition coil and ECM.

(d) Using a 16 mm plug wrench, install the spark plugs.
(e) Install the ignition coils.

2. INSPECT SPARK PLUG
NOTICE:
Do not use a wire brush for cleaning.

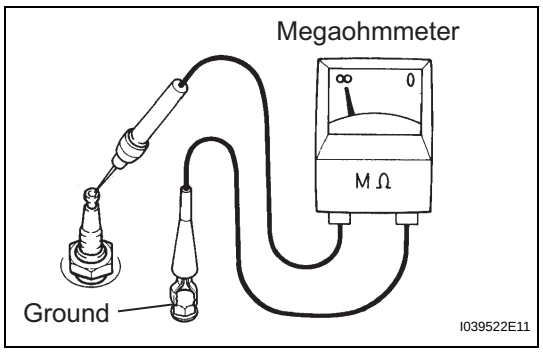

(a) Check the electrode.
(1) Using a megaohmmeter, measure the insulation resistance.
Standard resistance:
10 MΩ or more
HINT:
- If the result is not as specified, clean the spark plug with a spark plug cleaner and measure the resistance again.
- If a megaohmmete is not available, perform the following simple inspection instead.

(b) Alternative inspection method.
(1) Quickly accelerate the engine to 4,000 rpm 5 times.
(2) Remove the spark plug.

IG

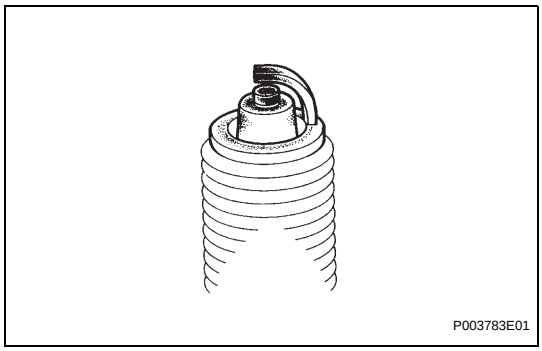
P003783E01

(3) Visually check the spark plug.
If the electrode is dry, the spark plug is functioning properly. If the electrode is damp, proceed to the next step.

(c) Check the spark plug for any damage to its thread and insulator.
If there is damage, replace the spark plug.
Recommended spark plug

Manufacturer	Product
DENSO	K20HR-U11
NGK	LFR6C11

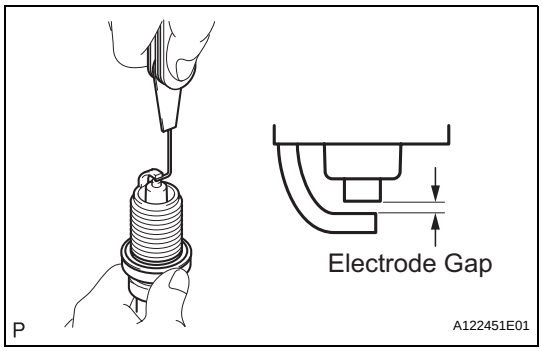

(d) Check the spark plug electrode gap.
Maximum electrode gap for used spark plug

Product	Electrode gap
K20HR-U11	1.1 mm (0.043 in.)
LFR6C11	1.1 mm (0.043 in.)

If the gap is greater than the maximum, replace the spark plug.
Electrode gap for new spark plug

Product	Electrode gap
K20HR-U11	1.0 to 1.1 mm (0.039 to 0.043 in.)
LFR6C11	1.0 to 1.1 mm (0.039 to 0.043 in.)

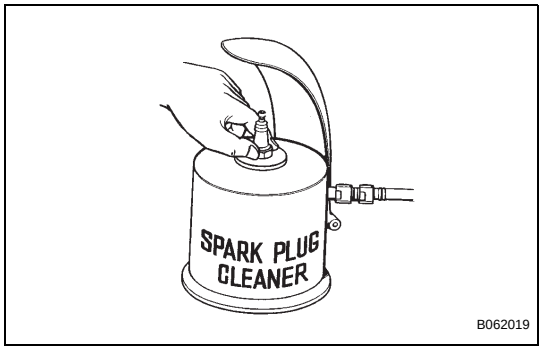

(e) Clean the spark plug.
If the electrode has traces of wet carbon, clean the electrode with a spark plug cleaner and then dry it.
Air pressure:
Below 588 kPa (6 kg/cm^2, 85 psi)
Duration:
20 seconds or less
HINT:
Only use the spark plug cleaner when the electrode is free of oil. If the electrode has traces of oil, use gasoline to clean off the oil before using the spark plug cleaner.

IG

IGNITION COIL

COMPONENTS

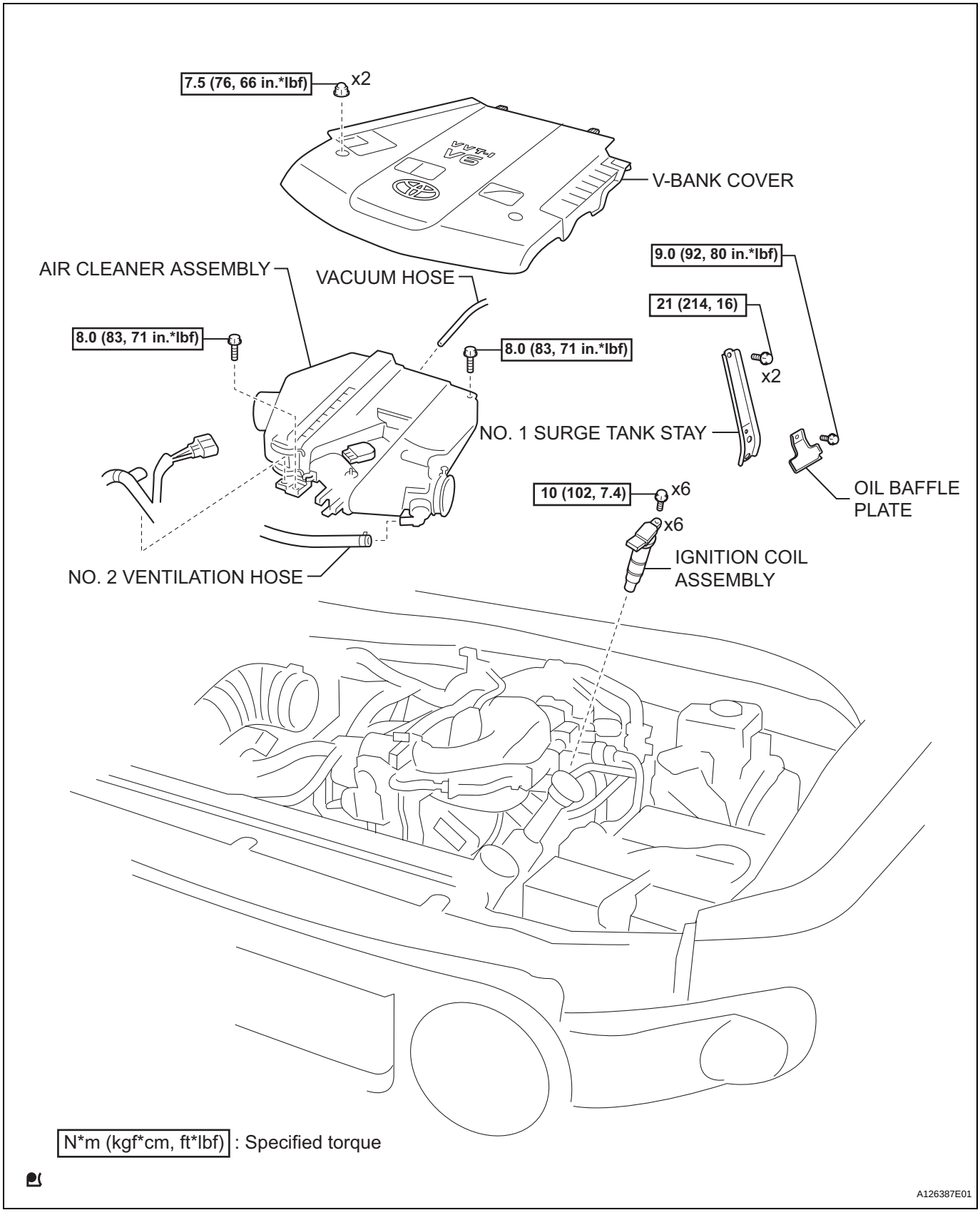

IG

REMOVAL

1. **DISCONNECT CABLE FROM NEGATIVE BATTERY TERMINAL**
2. **REMOVE V-BANK COVER (See page ES-428)**
3. **REMOVE AIR CLEANER ASSEMBLY (See page ES-429)**
4. **REMOVE OIL BAFFLE PLATE (See page FU-11)**
5. **REMOVE NO. 1 SURGE TANK STAY (See page FU-11)**
6. **DISCONNECT VENTILATION HOSE**
   (a) Disconnect the ventilation hose from the intake air surge tank.

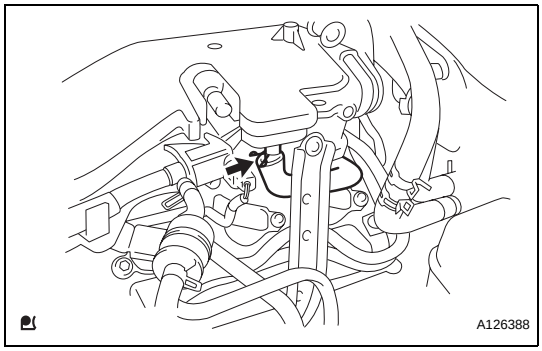

7. **REMOVE IGNITION COIL ASSEMBLY**
   (a) For Bank 1:
      (1) Disconnect the 3 connectors.
      (2) Remove the 3 bolts, then remove the 3 ignition coils.

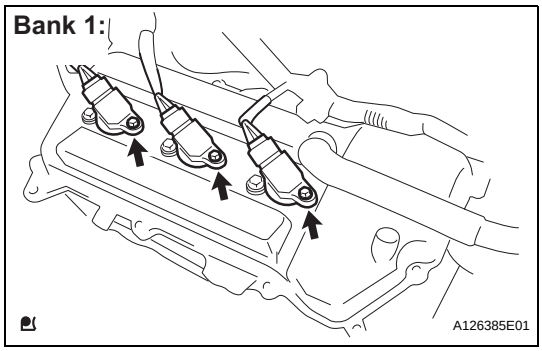

   (b) For Bank 2:
      (1) Disconnect the 3 connectors.
      (2) Remove the 3 bolts, then remove the 3 ignition coils.

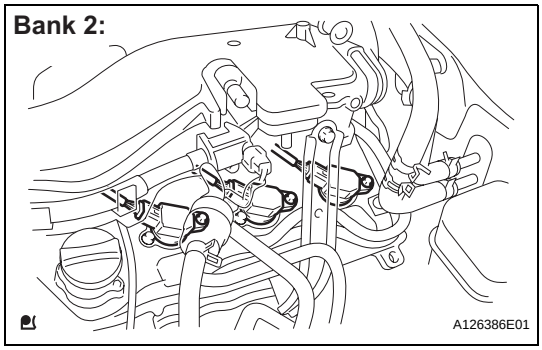

INSTALLATION

1. **INSTALL IGNITION COIL ASSEMBLY**
   (a) For Bank 1:
      (1) Install the 3 ignition coils with the 3 bolts.
      Torque: 10 N*m (102 kgf*cm, 7.4 ft.*lbf)
      (2) Connect the 3 ignition coil connectors.

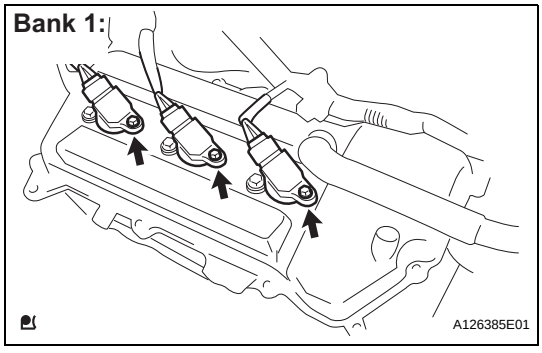

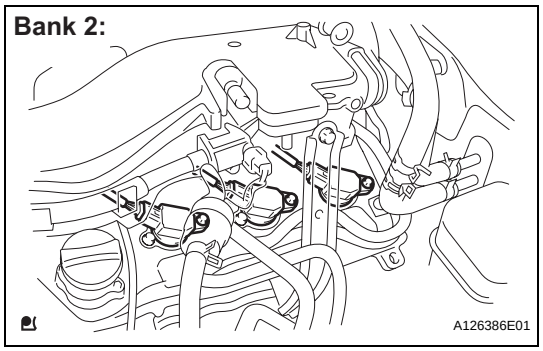

(b) For Bank 2:
(1) Install the 3 ignition coils with the 3 bolts.
Torque: 10 N*m (102 kgf*cm, 7.4 ft.*lbf)
(2) Connect the 3 ignition coil connectors.

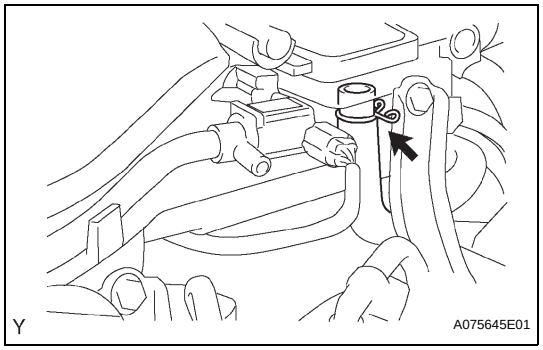

2. CONNECT VENTILATION HOSE
(a) Connect the ventilation hose to the intake air surge tank.

3. INSTALL NO. 1 SURGE TANK STAY (See page FU-19)

4. INSTALL OIL BAFFLE PLATE (See page FU-19)

5. INSTALL AIR CLEANER ASSEMBLY (See page ES-431)

6. CONNECT CABLE TO NEGATIVE BATTERY TERMINAL
Torque: 3.9 N*m (40 kgf*cm, 35 in.*lbf)

7. INSPECT IGNITION TIMING (See page EM-1)

8. INSPECT ENGINE IDLING SPEED (See page EM-2)

9. INSTALL V-BANK COVER (See page ES-431)

INSTRUMENT PANEL ASSEMBLY

PRECAUTION

1. PRECAUTION FOR VEHICLE WITH SRS AIRBAG AND SEAT BELT PRETENSIONER

(a) Some of these operations may affect the SRS airbag system. Read the precautionary notices concerning the SRS airbag system before servicing (See page RS-1).

COMPONENTS

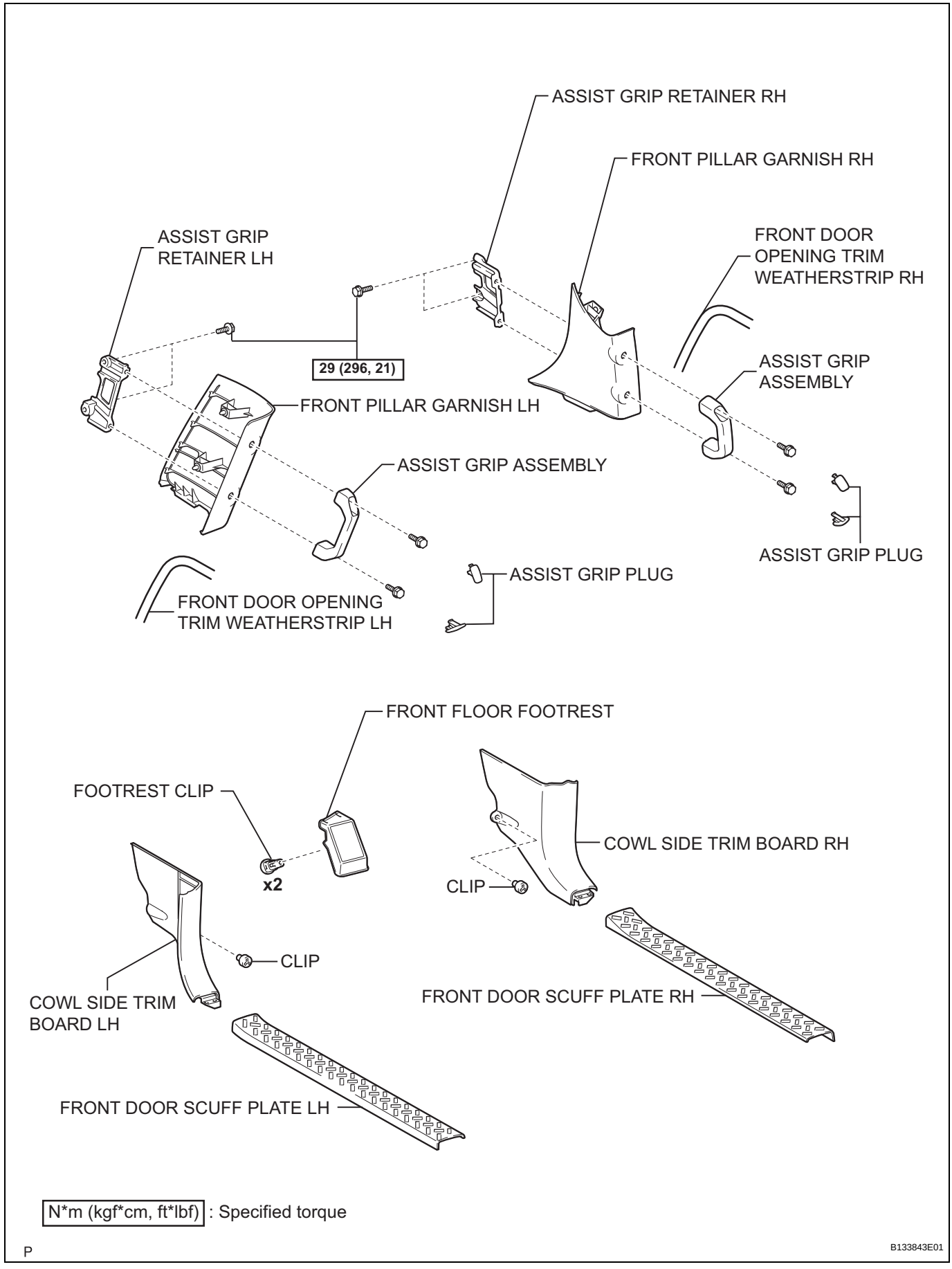

N*m (kgf*cm, ft*lbf) : Specified torque

P

B133843E01

for Automatic Transmission 2WD:

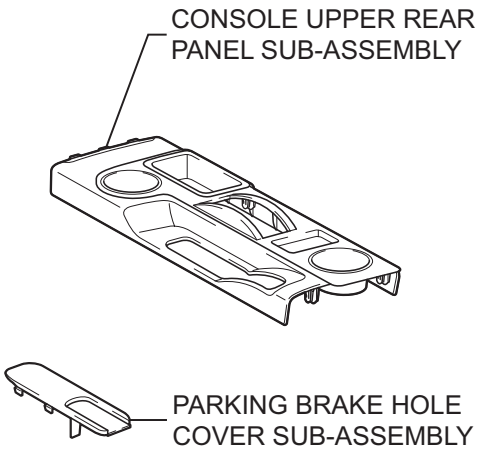

for Manual Transmission 4WD:

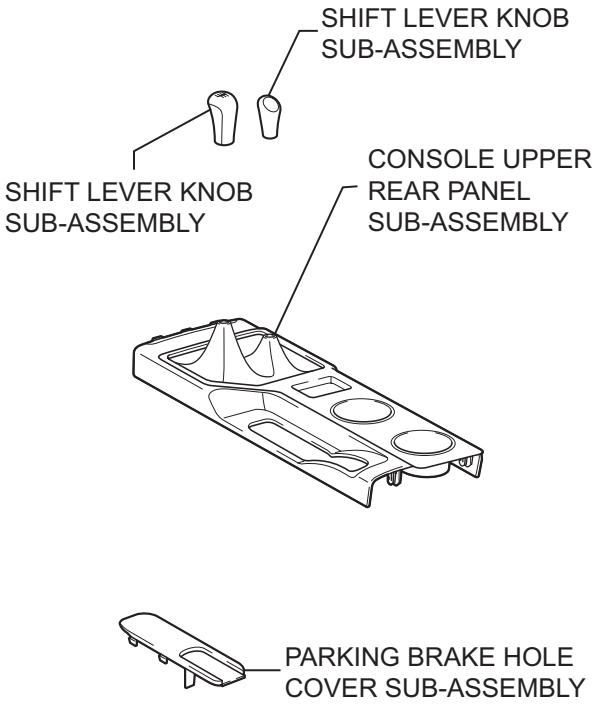

for Automatic Transmission 4WD:

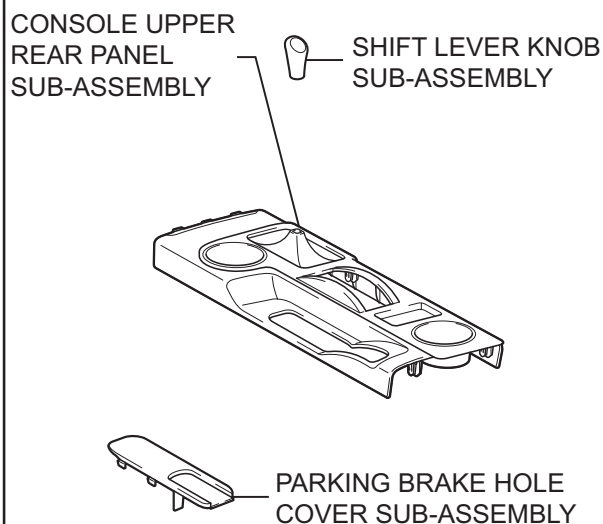

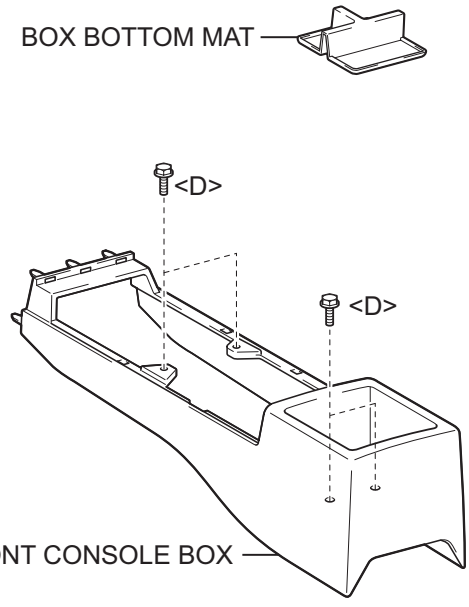

IP

P

B133844E01

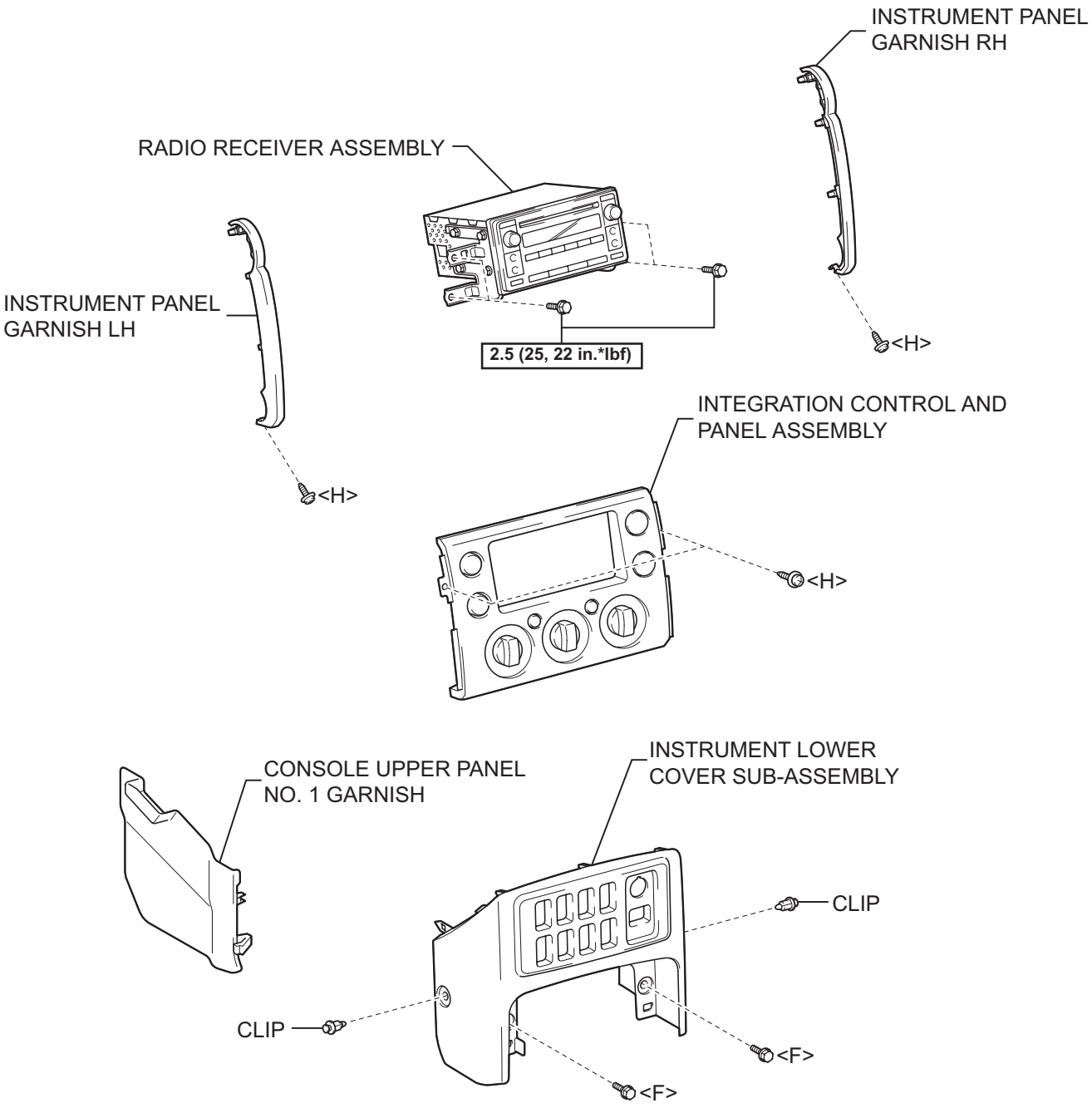

N*m (kgf*cm, ft*lbf) : Specified torque

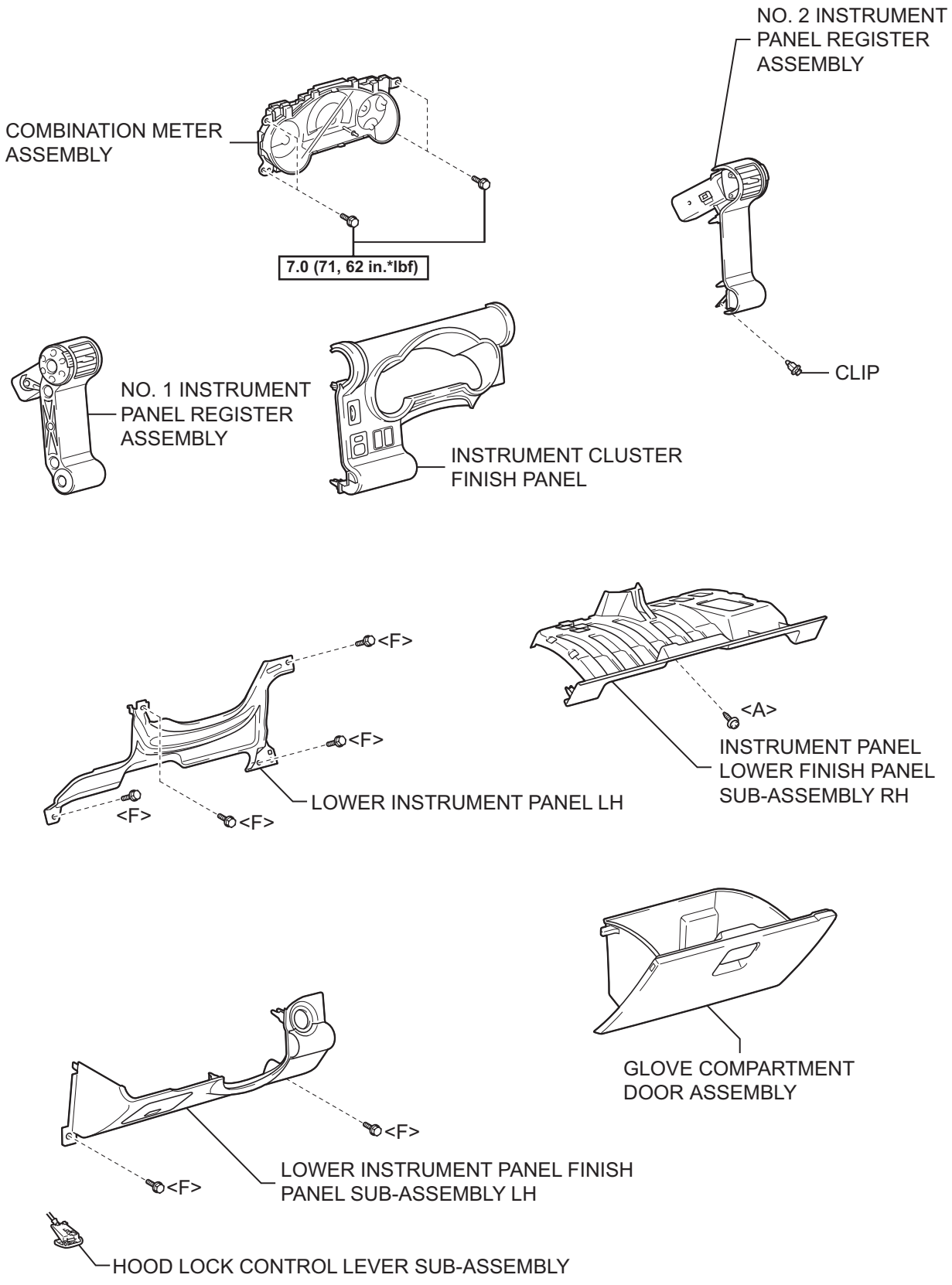

N*m (kgf*cm, ft.*lbf) : Specified torque

P

B133846E01

IP

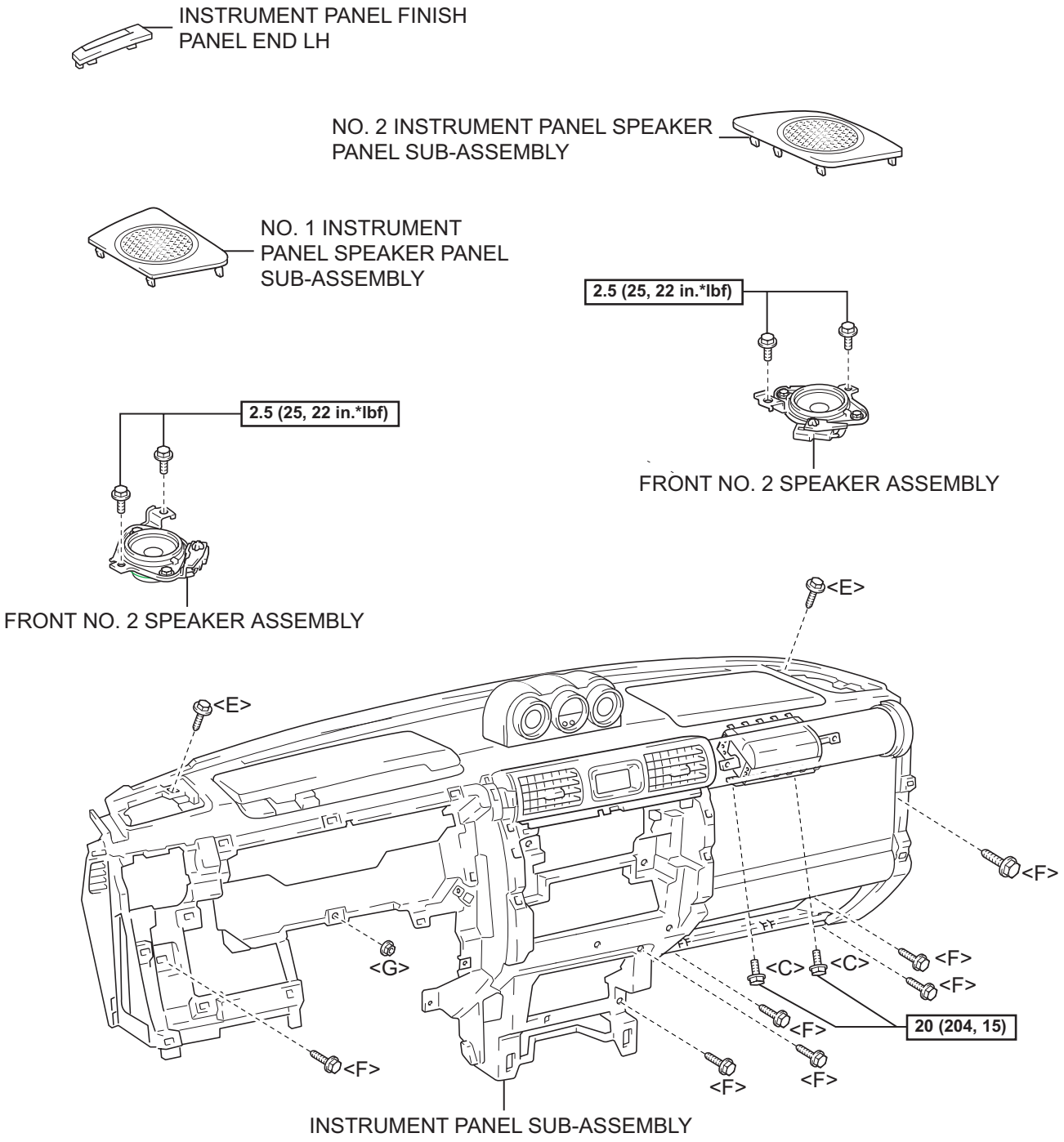

IP

N*m (kgf*cm, ft*lbf) : Specified torque

P

B133847E01

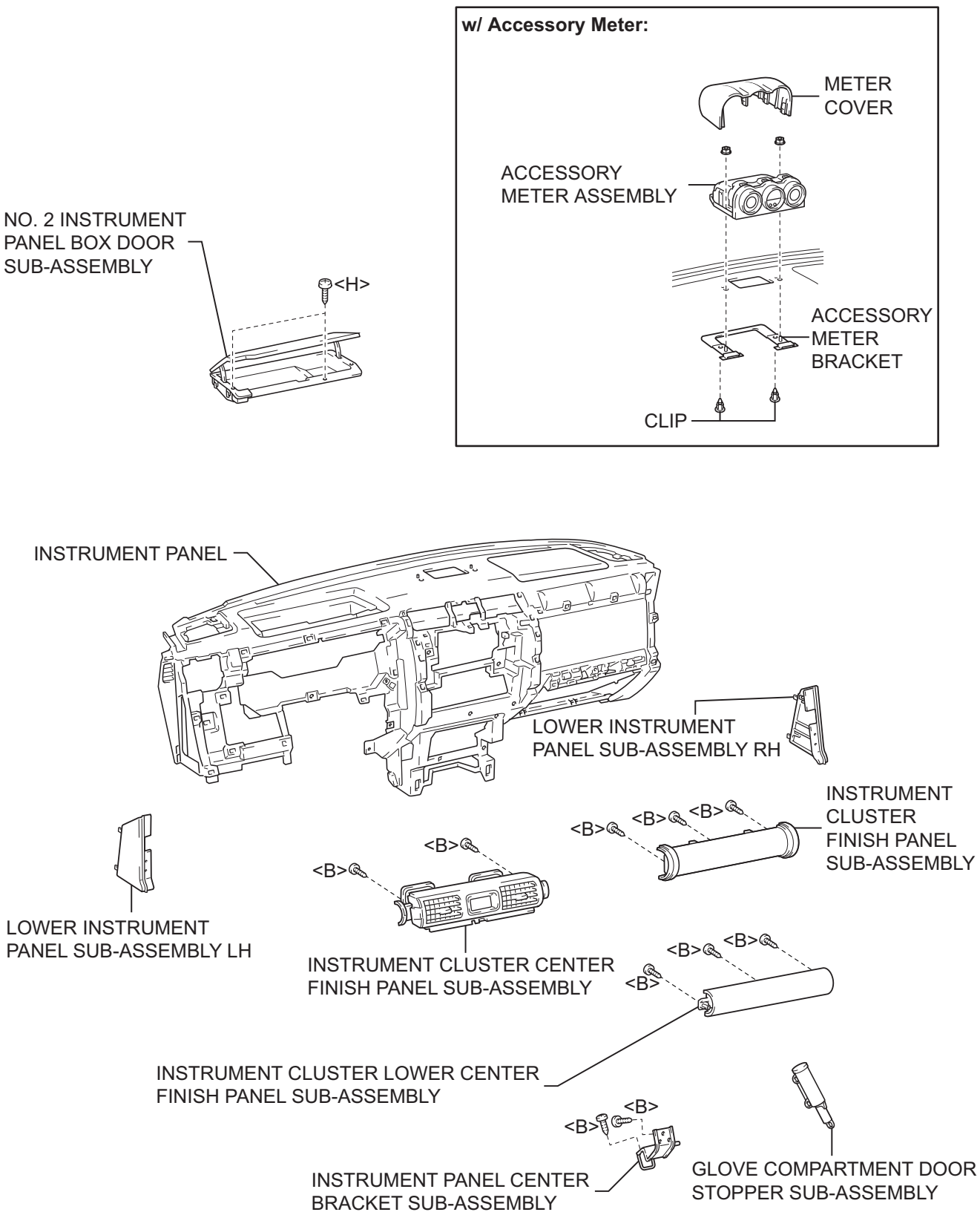

P

B133848E01

IP

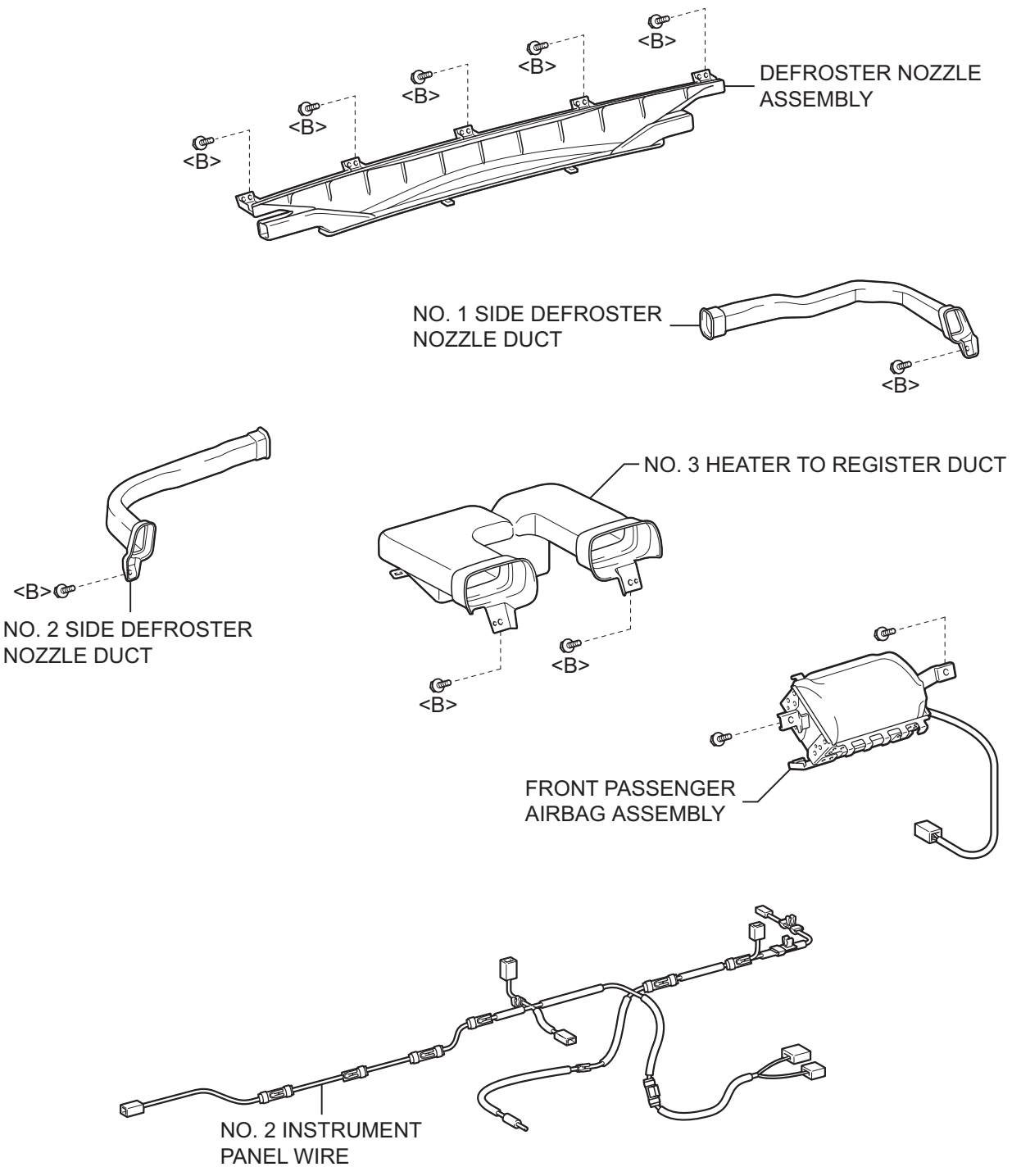
<B>
<B>
<B>
<B>
<B>
DEFROSTER NOZZLE ASSEMBLY
NO. 1 SIDE DEFROSTER NOZZLE DUCT
<B>
<B>
NO. 2 SIDE DEFROSTER NOZZLE DUCT
NO. 3 HEATER TO REGISTER DUCT
<B>
<B>
FRONT PASSENGER AIRBAG ASSEMBLY
NO. 2 INSTRUMENT PANEL WIRE

REMOVAL

HINT:
Use the same procedure for both the RH and LH sides.

1. **BOLTS, SCREWS AND NUTS TABLE**
   HINT:
   All bolts, screws and nuts relevant to installing and removing the instrument panel are shown, along with their alphabetic codes, in the table below.

mm (in.) (L = Length)

Code	Shape	Code	Shape	Code	Shape
<A>	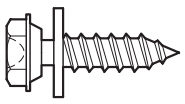 φ = 5 (0.20) L = 14 (0.55) 90159-50287	<B>	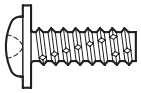 φ = 5 (0.20) L = 14 (0.55) 93568-55014	<C>	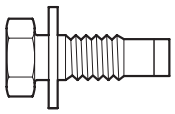 φ = 6 (0.24) L = 14 (0.55) 90119-08B72
<D>	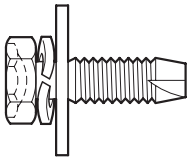 φ = 6 (0.24) L = 20 (0.79) 90119-06341	<E>	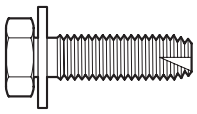 φ = 6 (0.24) L = 20 (0.79) 90119-06906	<F>	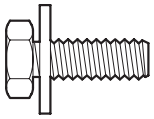 φ = 6 (0.24) L = 20 (0.79) 91635-G0618
<G>	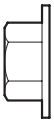 φ = 6 (0.24) 94150-80600	<H>	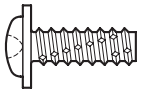 φ = 5 (0.20) L = 18 (0.71) 93568-55018		

P B133850E01

IP

2. **DISCONNECT CABLE FROM NEGATIVE BATTERY TERMINAL**
   Wait for at least 90 seconds after disconnecting the cable to prevent the airbag from working.
3. **REMOVE FRONT DOOR SCUFF PLATE RH (See page IR-15)**
4. **REMOVE FRONT DOOR SCUFF PLATE LH (See page IR-15)**
5. **REMOVE FRONT FLOOR FOOTREST (See page IR-2)**
6. **REMOVE FOOTREST CLIP (See page IR-2)**

7. **REMOVE COWL SIDE TRIM BOARD RH (See page IR-15)**

8. **REMOVE COWL SIDE TRIM BOARD LH (See page IR-15)**

9. **SEPARATE FRONT DOOR OPENING TRIM WEATHERSTRIP LH**
   (a) Separate the front door opening trim weatherstrip LH.

10. **SEPARATE FRONT DOOR OPENING TRIM WEATHERSTRIP RH**
    (a) Separate the front door opening trim weatherstrip RH.

11. **REMOVE ASSIST GRIP PLUG (See page IR-17)**

12. **REMOVE ASSIST GRIP ASSEMBLY (See page IR-17)**

13. **REMOVE FRONT PILLAR GARNISH RH (See page IR-18)**

14. **REMOVE FRONT PILLAR GARNISH LH (See page IR-18)**

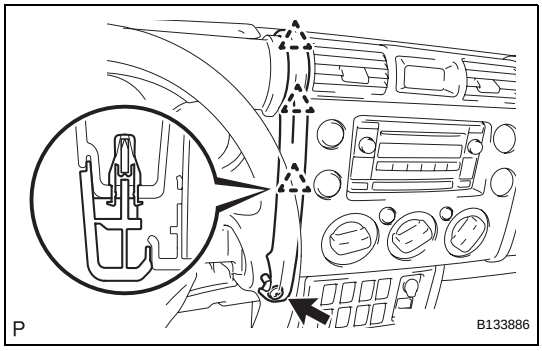

15. **REMOVE INSTRUMENT PANEL GARNISH LH**
    (a) Remove screw <H>.
    (b) Disengage the 3 clips and remove the instrument panel garnish.
    NOTICE:
    - **Pull the instrument panel garnish up at an angle of 45° to remove it.**
    - **Do not damage the surface of the instrument panel when removing it.**

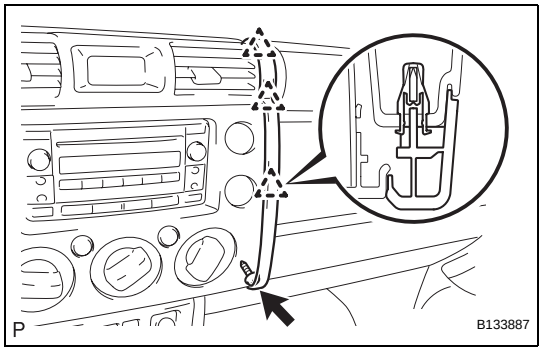

16. **REMOVE INSTRUMENT PANEL GARNISH RH**
    (a) Remove screw <H>.
    (b) Disengage the 3 clips and remove the instrument panel garnish.
    NOTICE:
    - **Pull the instrument panel garnish up at an angle of 45° to remove it.**
    - **Do not damage the surface of the instrument panel when removing it.**

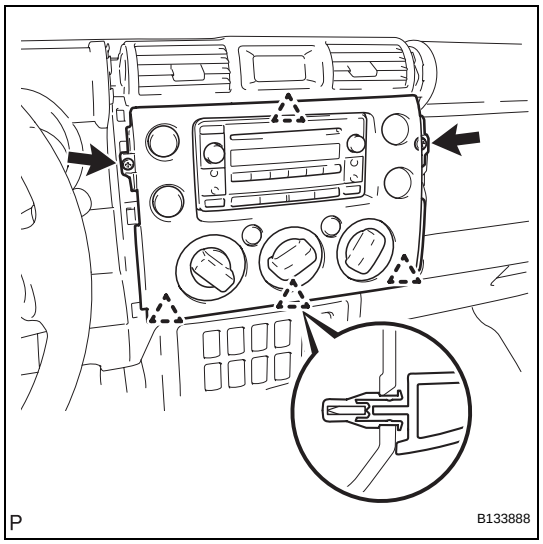

17. REMOVE INTEGRATION CONTROL AND PANEL ASSEMBLY

(a) Remove the 2 <H> screws.

(b) Disengage the 4 clips and remove the integration control panel assembly.

(c) Disconnect the 3 connectors.

18. REMOVE RADIO RECEIVER ASSEMBLY (See page AV-55)

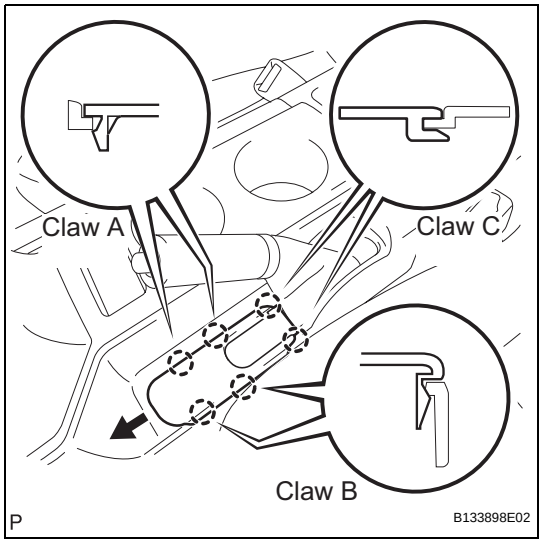

19. REMOVE PARKING BRAKE HOLE COVER SUB-ASSEMBLY

(a) Disengage the 2 A claws and 2 B claws.

(b) Slide the parking brake hole cover toward the front of the vehicle, disengage the 2 C claws and remove the parking brake hole cover.

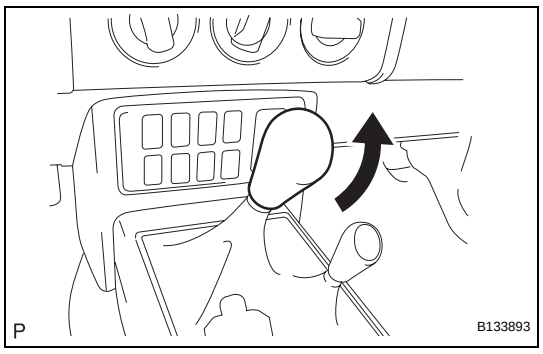

20. REMOVE SHIFT LEVER KNOB SUB-ASSEMBLY (for Manual Transmission)

(a) Remove the shift lever knob.

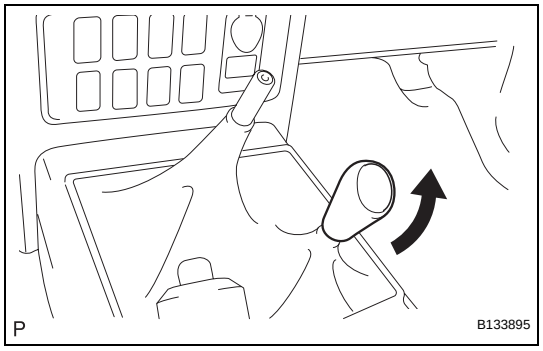

21. REMOVE SHIFT LEVER KNOB SUB-ASSEMBLY (for 4WD)

(a) Remove the shift lever knob.

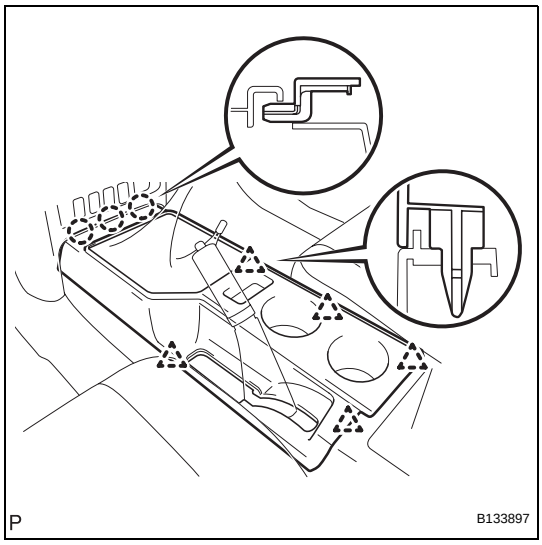

22. REMOVE CONSOLE UPPER REAR PANEL SUB-ASSEMBLY

(a) Shift the shift lever into the N position.

(b) Disengage the 5 clips and 3 claws and remove the console upper rear panel.

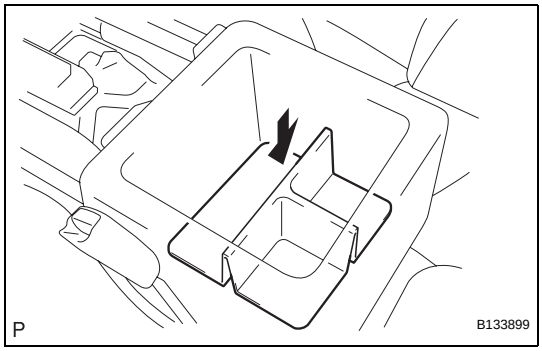

23. REMOVE BOX BOTTOM MAT

(a) Remove the box bottom mat.

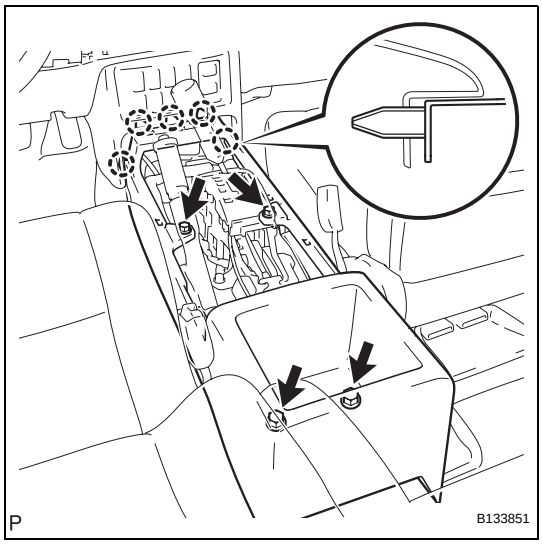

24. REMOVE FRONT CONSOLE BOX

(a) Remove the 4 <D> bolts.

(b) Disengage the 5 claws and remove the console box.

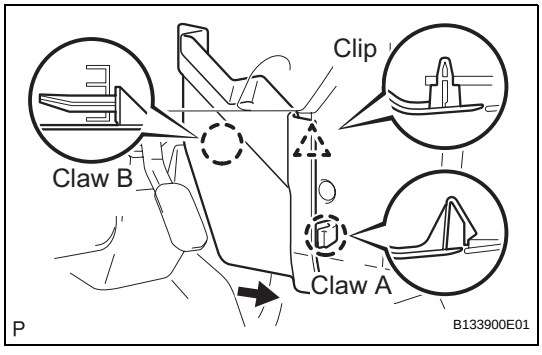

25. REMOVE CONSOLE UPPER PANEL NO. 1 GARNISH

(a) Disengage claw A and the clip.

(b) Slide the console upper panel garnish toward the rear of the vehicle, disengage the claw B and remove the console upper panel garnish.

IP

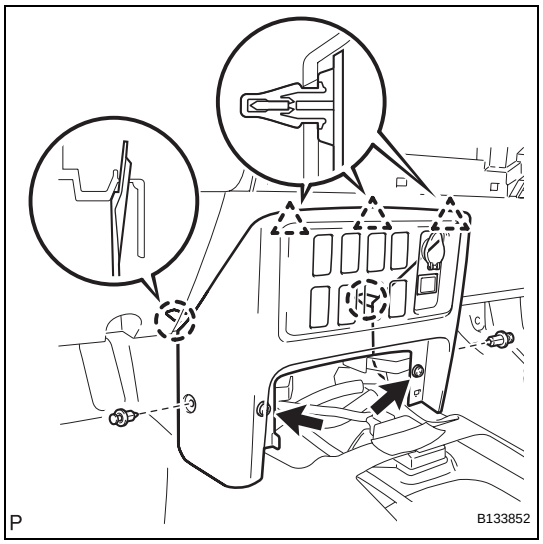

26. REMOVE INSTRUMENT LOWER COVER SUB-ASSEMBLY

(a) Remove the 2 clips and 2 <F> bolts.

(b) Disengage the 3 clips and 2 claws and remove the instrument lower cover.

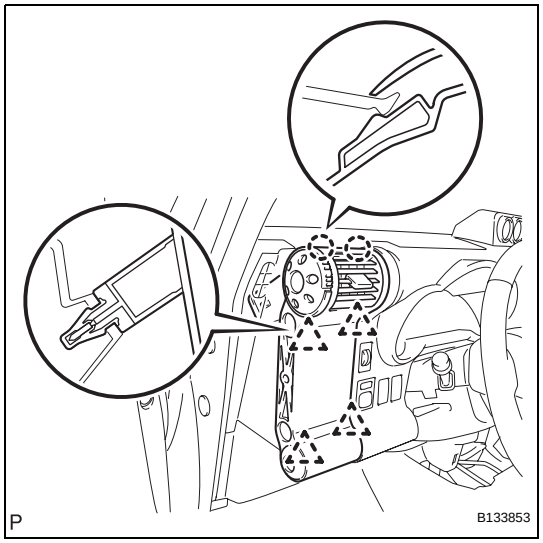

27. REMOVE NO. 1 INSTRUMENT PANEL REGISTER ASSEMBLY

(a) Disengage the 4 clips and 2 claws and remove the instrument panel register.

NOTICE:

- **To avoid breakage of the register, remove the instrument panel register with the shut damper of the register open.**
- **Pull the instrument panel register up diagonally to remove it.**

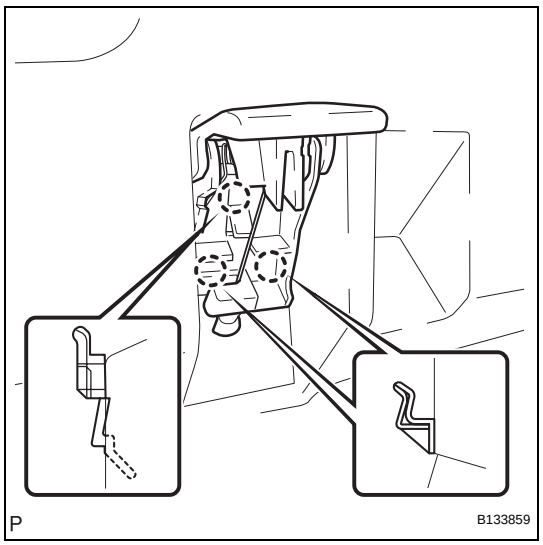

28. SEPARATE HOOD LOCK CONTROL LEVER SUB-ASSEMBLY

(a) Disengage the 3 claws and separate the hood lock control lever.

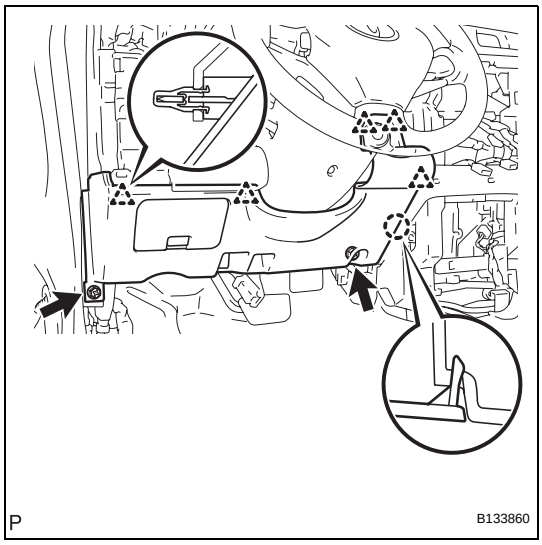

29. REMOVE LOWER INSTRUMENT PANEL FINISH PANEL SUB-ASSEMBLY LH

(a) Remove the 2 <F> bolts.

(b) Disengage the 5 clips and claw and remove the lower instrument panel finish panel.

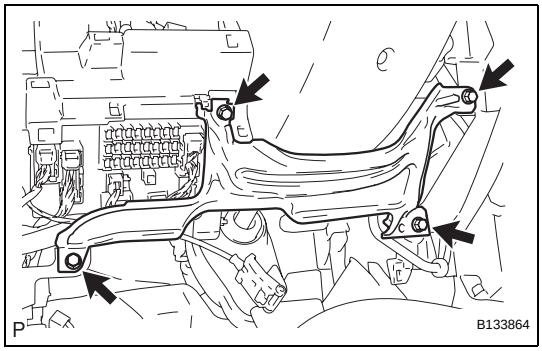

30. REMOVE LOWER INSTRUMENT PANEL LH

(a) Remove the 4 <F> bolts and remove the lower instrument panel.

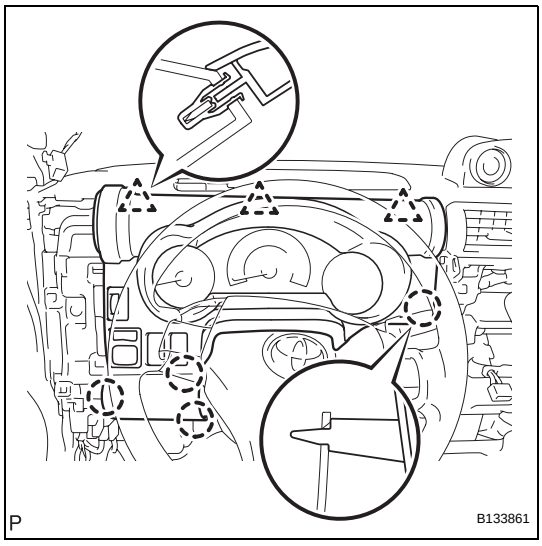

31. REMOVE INSTRUMENT CLUSTER FINISH PANEL

(a) Disengage the 3 clips and the 4 claws and remove the instrument cluster finish panel.

(b) Disconnect the connectors.

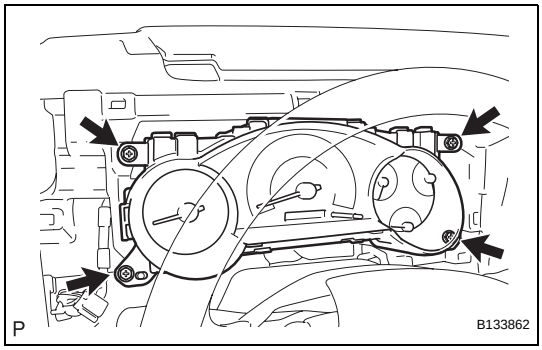

32. REMOVE COMBINATION METER ASSEMBLY

(a) Remove the 4 screws.

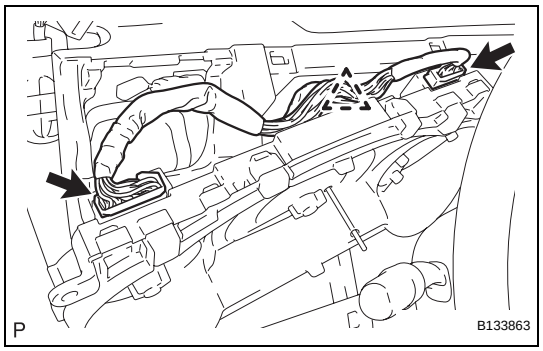

(b) Disconnect the 2 connectors and clamp and remove the combination meter.

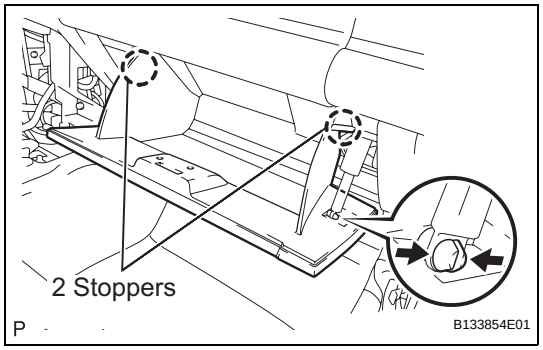

33. REMOVE GLOVE COMPARTMENT DOOR ASSEMBLY

(a) Disengage the claw and separate the glove compartment door stoppers from the glove compartment door.

(b) Slightly flex the upper part of the glove compartment door assembly to release the 2 stoppers and open the glove compartment door until it becomes horizontal.

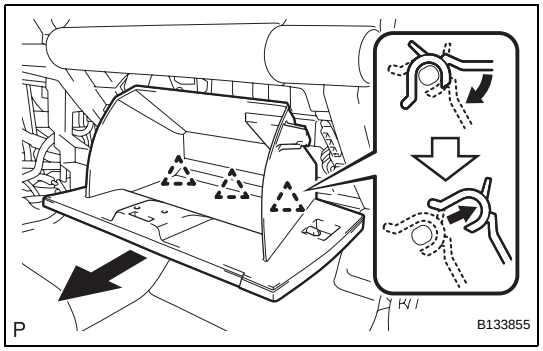

(c) Pull the glove compartment door assembly toward the rear of the vehicle to release the 3 hinges and remove the glove compartment door assembly.

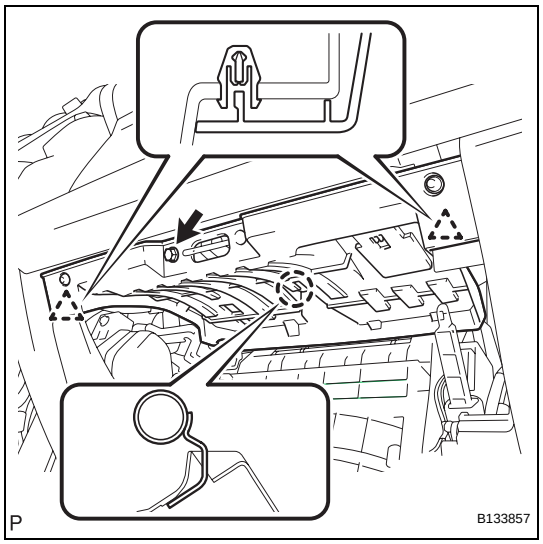

34. REMOVE INSTRUMENT PANEL LOWER FINISH PANEL SUB-ASSEMBLY RH

(a) Remove screw <A>.

(b) Disengage the 2 clips and claw and remove the instrument panel lower finish panel.

(c) Separate the connectors from the instrument panel lower finish panel.

IP

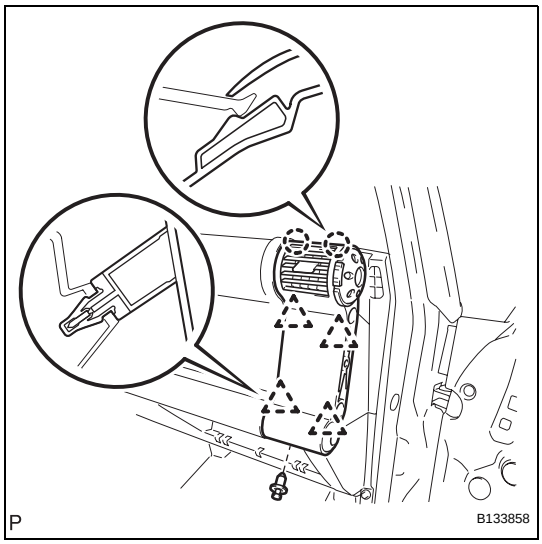

35. REMOVE NO. 2 INSTRUMENT PANEL REGISTER ASSEMBLY

(a) Remove the clip.

(b) Disengage the 4 clips and 2 claws and remove the instrument panel register.

NOTICE:

- **To avoid breakage of the register, remove the instrument panel register with the shut damper of the register open.**
- **Pull the instrument panel register up diagonally to remove it.**

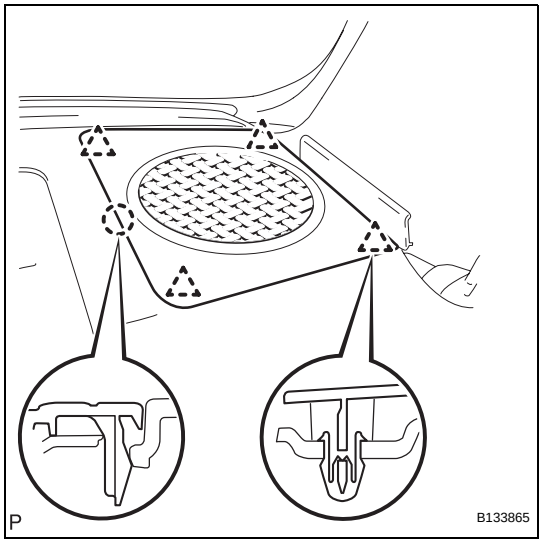

36. REMOVE NO. 2 INSTRUMENT PANEL SPEAKER PANEL SUB-ASSEMBLY

(a) Disengage the 4 clips and claw and remove the instrument panel speaker panel.

37. REMOVE NO. 1 INSTRUMENT PANEL SPEAKER PANEL SUB-ASSEMBLY

HINT:

Use the same procedure as for the RH side.

38. REMOVE FRONT NO. 2 SPEAKER ASSEMBLY (See page AV-62)

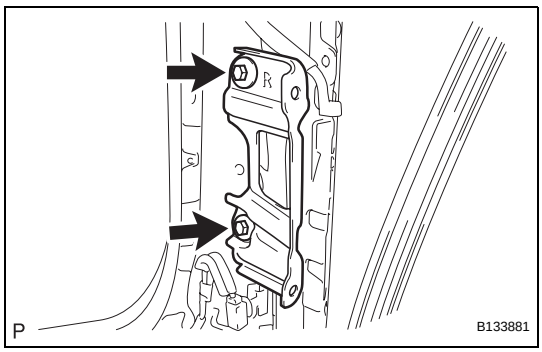

39. REMOVE ASSIST GRIP RETAINER RH

(a) Remove the 2 bolts and remove the assist grip retainer.

40. REMOVE ASSIST GRIP RETAINER LH

HINT:

Use the same procedure as for the RH side.

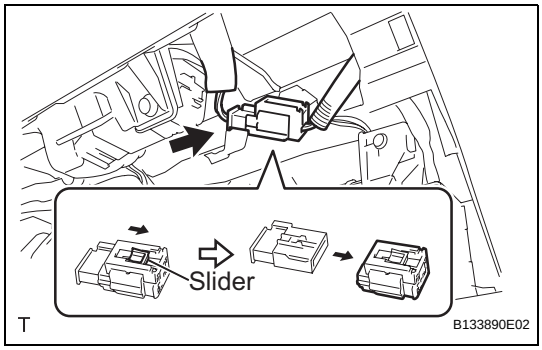

41. DISCONNECT PASSENGER AIRBAG CONNECTOR

(a) Slide the slider and disconnect the passenger airbag connector.

42. REMOVE INSTRUMENT PANEL SUB-ASSEMBLY

(a) Disengage the clamps and disconnect the connectors.

IP

(b) Remove the 2 <C> bolts, 2 <E> bolts, 7 <F> bolts and nut <G> and remove the instrument panel.

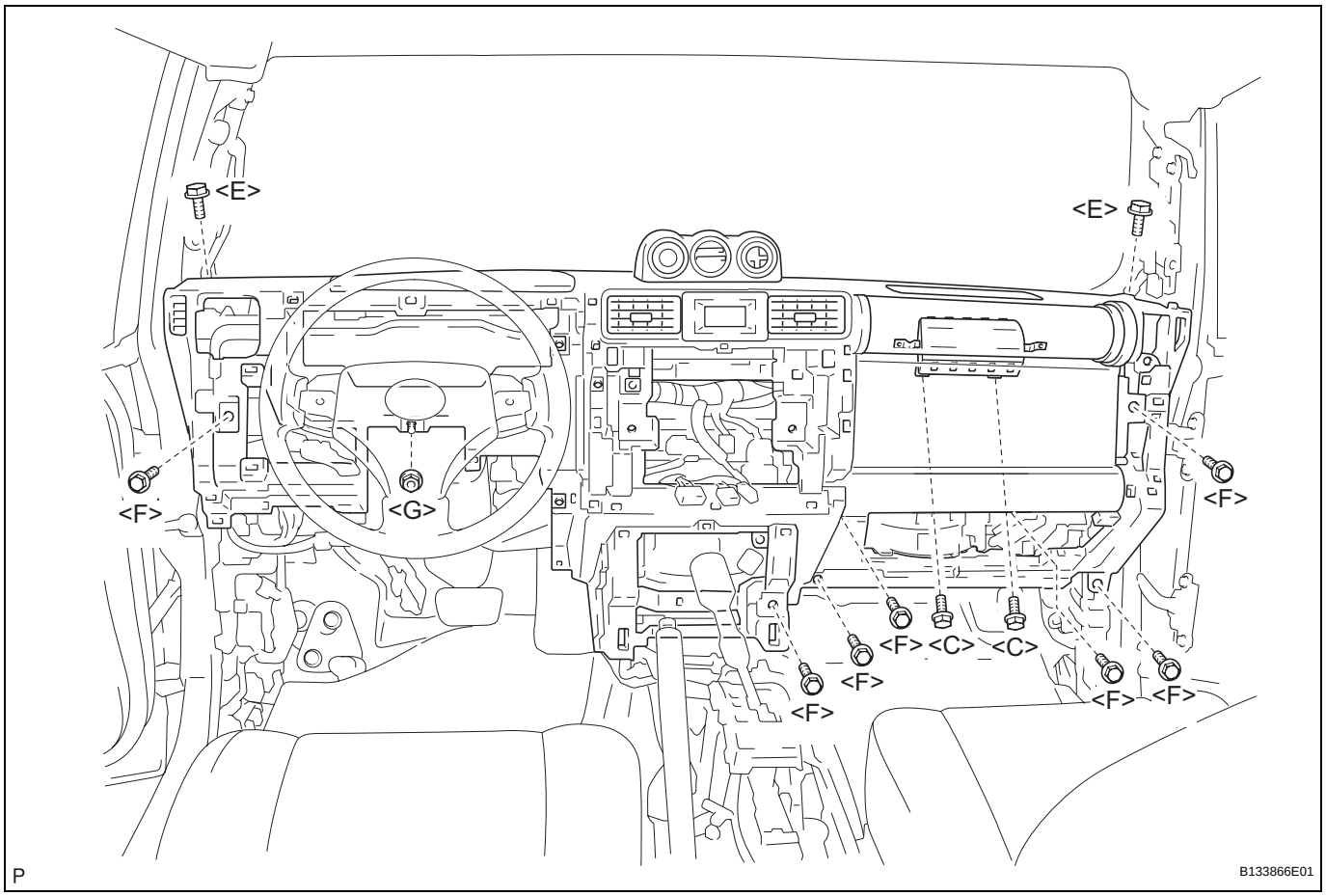

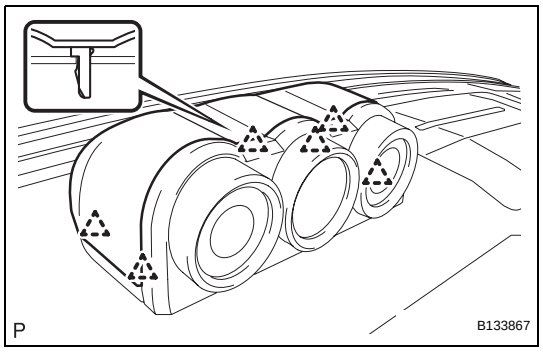

43. REMOVE METER COVER

(a) Disengage the 6 clips and remove the meter cover.

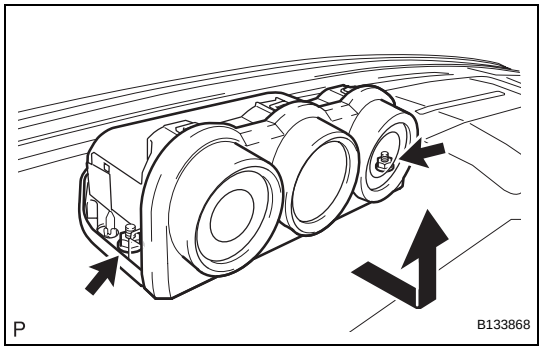

44. REMOVE ACCESSORY METER ASSEMBLY

(a) Remove the 2 nuts and remove the accessory meter.

IP

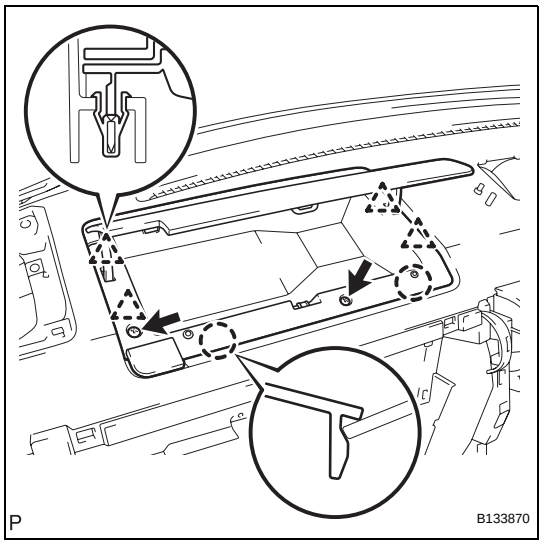

45. REMOVE NO. 2 INSTRUMENT PANEL BOX DOOR SUB-ASSEMBLY

(a) Remove the 2 <H> screws.

(b) Disengage the 4 clips and 2 claws and remove the instrument panel box door.

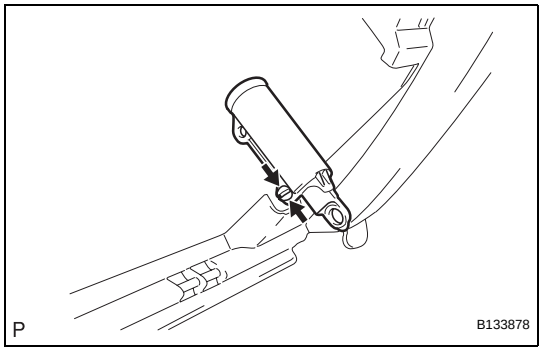

46. REMOVE GLOVE COMPARTMENT DOOR STOPPER SUB-ASSEMBLY

(a) Disengage the claw and remove the glove compartment door stopper.

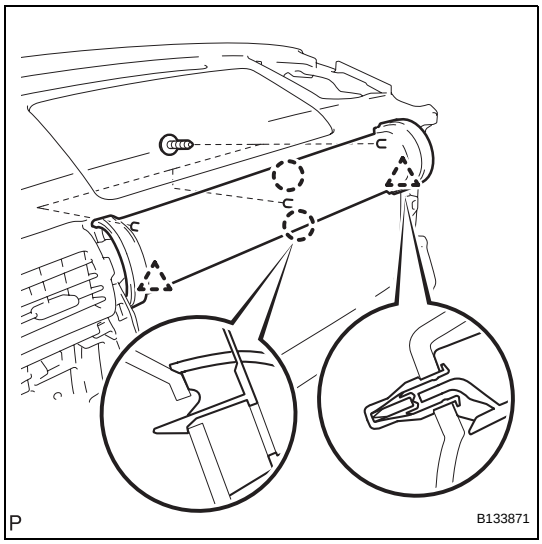

47. REMOVE INSTRUMENT CLUSTER FINISH PANEL SUB-ASSEMBLY

(a) Remove the 3 <B> screws.

(b) Disengage the 2 clips and 2 claws and remove the instrument cluster finish panel.

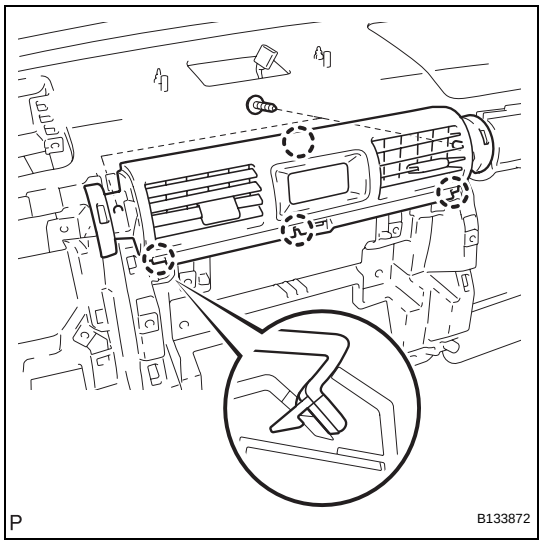

48. REMOVE INSTRUMENT CLUSTER CENTER FINISH PANEL SUB-ASSEMBLY

(a) Remove the 2 <B> screws.

(b) Disengage the 4 claws and remove the instrument cluster center finish panel.

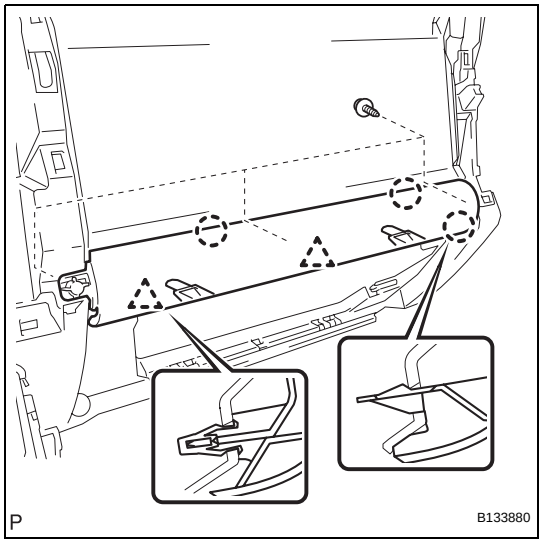

49. REMOVE INSTRUMENT CLUSTER LOWER CENTER FINISH PANEL SUB-ASSEMBLY

(a) Remove the 3 <B> screws.

(b) Disengage the 2 clips and 3 claws and remove the instrument cluster lower center finish panel.

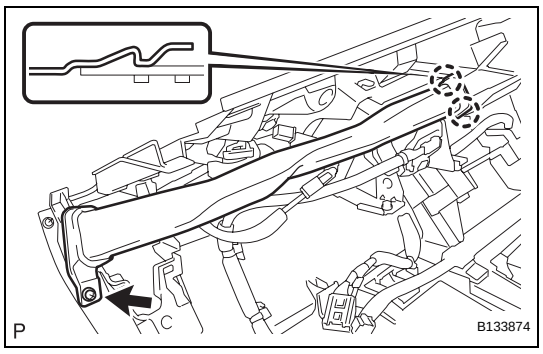

50. REMOVE NO. 1 SIDE DEFROSTER NOZZLE DUCT

(a) Remove screw <B>.

(b) Disengage the 2 claws and remove the side defroster nozzle duct.

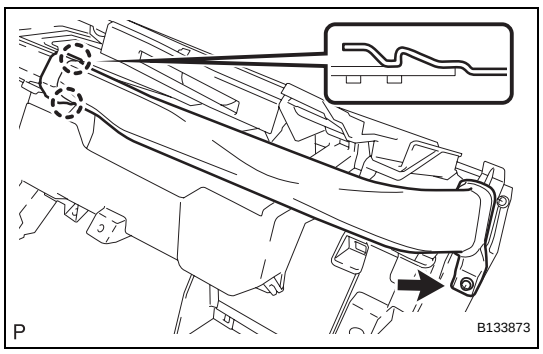

51. REMOVE NO. 2 SIDE DEFROSTER NOZZLE DUCT

(a) Remove screw <B>.

(b) Disengage the 2 claws and remove the side defroster nozzle duct.

IP

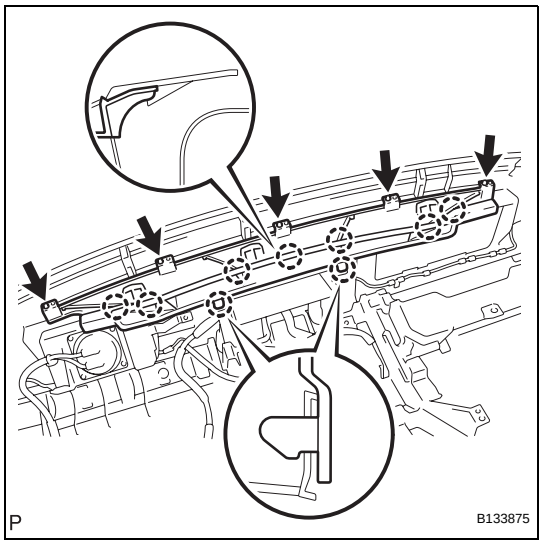

52. REMOVE DEFROSTER NOZZLE ASSEMBLY

(a) Remove the 5 <B> screws.

(b) Disengage the 9 claws and remove the defroster nozzle.

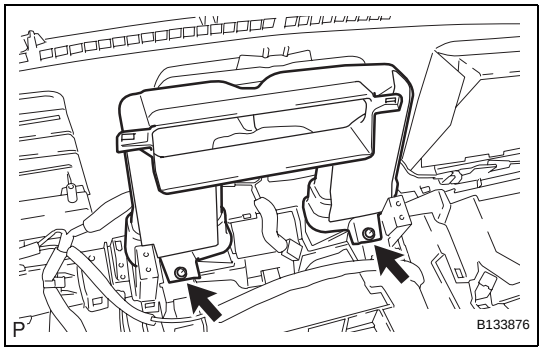

53. REMOVE NO. 3 HEATER TO REGISTER DUCT

(a) Remove the 2 <B> screws and remove the heater to register duct.

54. REMOVE NO. 2 INSTRUMENT PANEL WIRE

(a) Disengage the 16 clamps and remove the instrument panel wire.

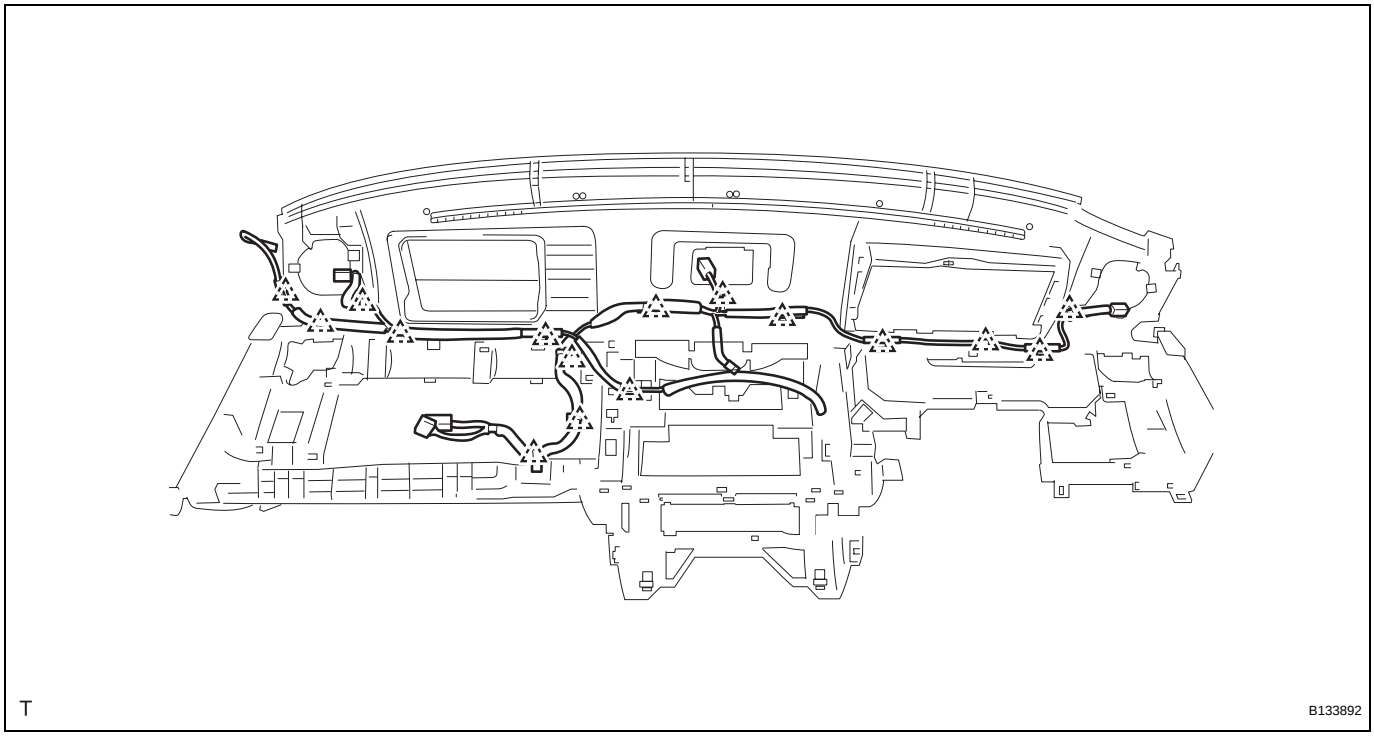

55. REMOVE FRONT PASSENGER AIRBAG ASSEMBLY
(See page RS-363)

IP

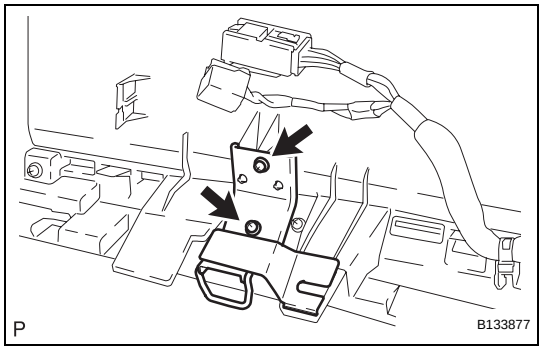

56. REMOVE INSTRUMENT PANEL CENTER BRACKET SUB-ASSEMBLY

(a) Remove the 2 <B> screws and remove the instrument panel center bracket.

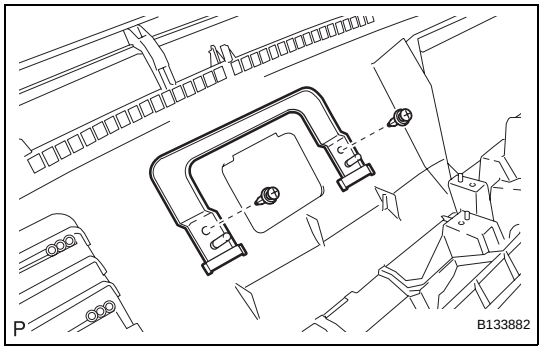

57. REMOVE ACCESSORY METER BRACKET

(a) Remove the 2 clips and remove the accessory meter bracket.

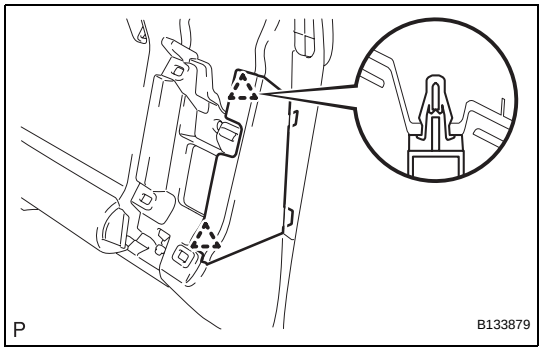

58. REMOVE LOWER INSTRUMENT PANEL SUB-ASSEMBLY RH

(a) Disengage the 2 clips and remove the lower instrument panel.

59. REMOVE LOWER INSTRUMENT PANEL SUB-ASSEMBLY LH

HINT:

Use the same procedure as for the RH side.

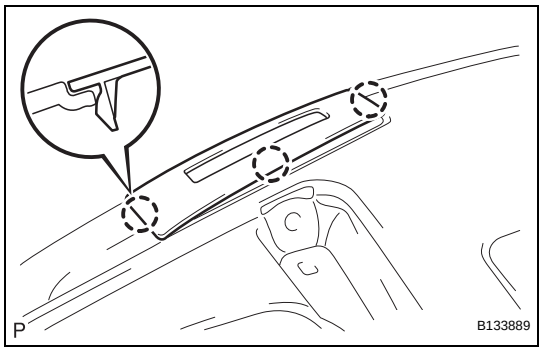

60. REMOVE INSTRUMENT PANEL FINISH PANEL END LH

(a) Disengage the 3 claws and remove the instrument panel finish panel end.

IP

INSTALLATION

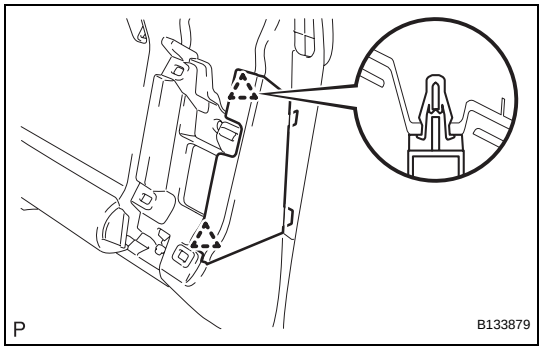

1. INSTALL LOWER INSTRUMENT PANEL SUB-ASSEMBLY RH

(a) Engage the 2 clips and install the lower instrument panel.

2. INSTALL LOWER INSTRUMENT PANEL SUB-ASSEMBLY LH

HINT:

Use the same procedure as for the RH side.

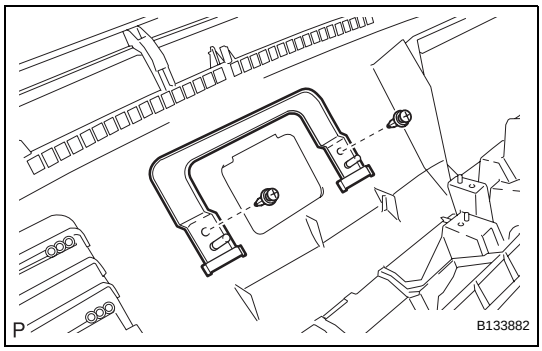

3. INSTALL ACCESSORY METER BRACKET

(a) Install the accessory meter bracket with the 2 clips.

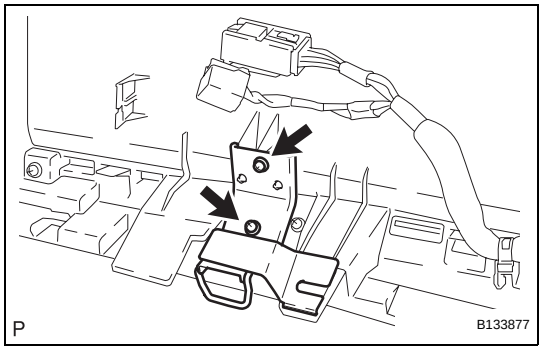

4. INSTALL INSTRUMENT PANEL CENTER BRACKET SUB-ASSEMBLY

(a) Install the instrument panel center bracket with the 2 <B> screws.

5. INSTALL FRONT PASSENGER AIRBAG ASSEMBLY (See page RS-364)

6. INSTALL NO. 2 INSTRUMENT PANEL WIRE

(a) Engage the 16 clamps and install the instrument panel wire.

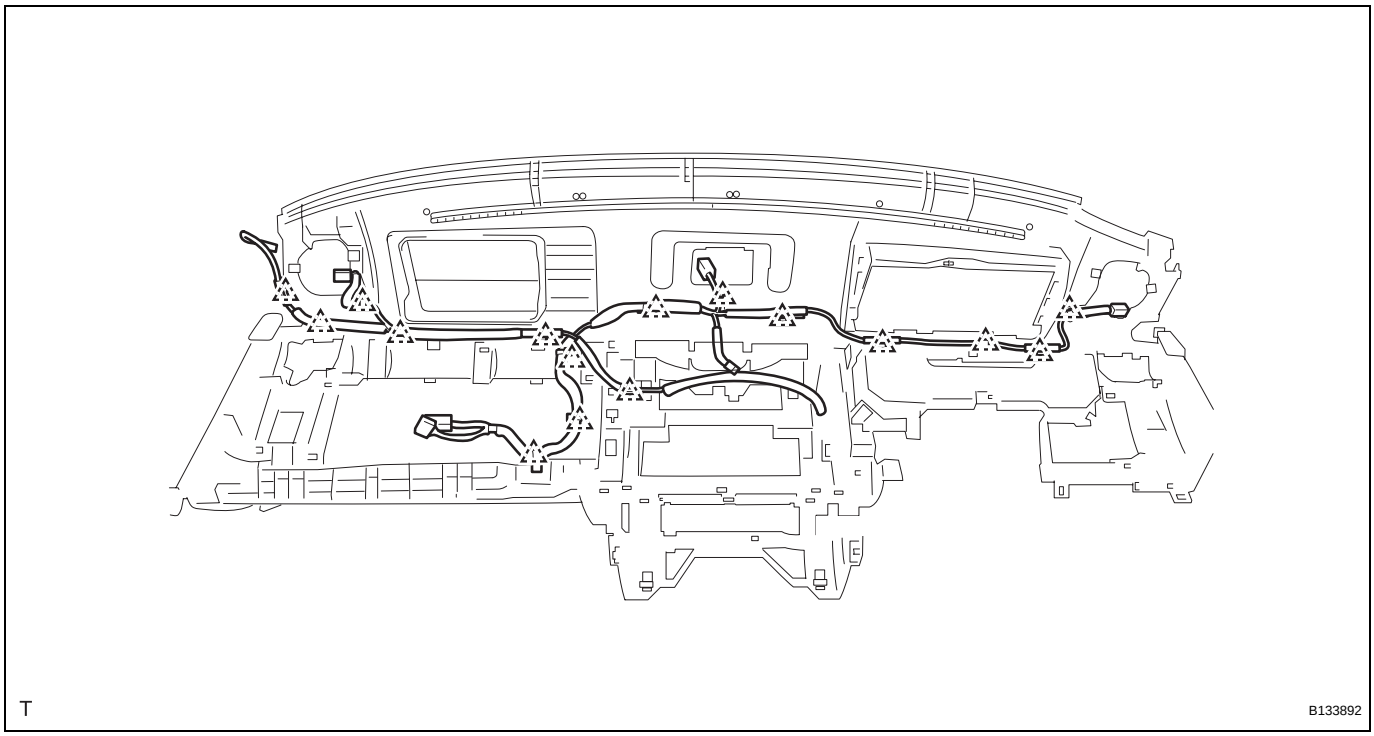

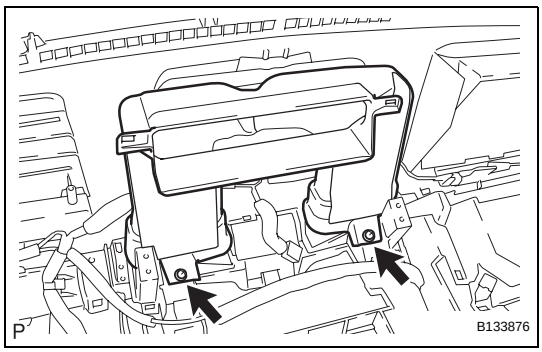

7. INSTALL NO. 3 HEATER TO REGISTER DUCT

(a) Install the heater to register duct with the 2 <B> screws.

IP

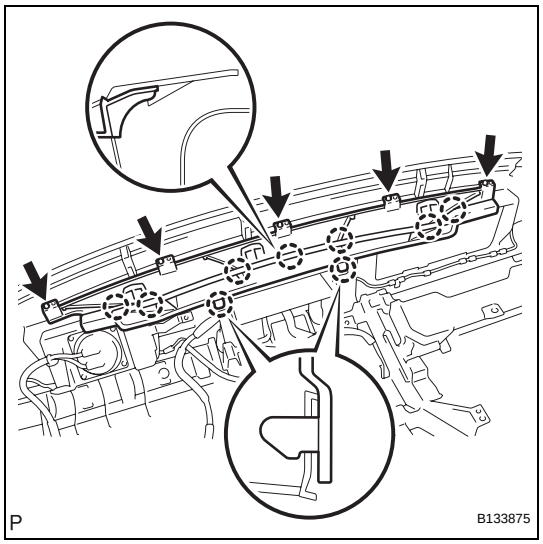

8. INSTALL DEFROSTER NOZZLE ASSEMBLY
(a) Engage the 9 claws and install the defroster nozzle.
(b) Install the 5 <B> screws.

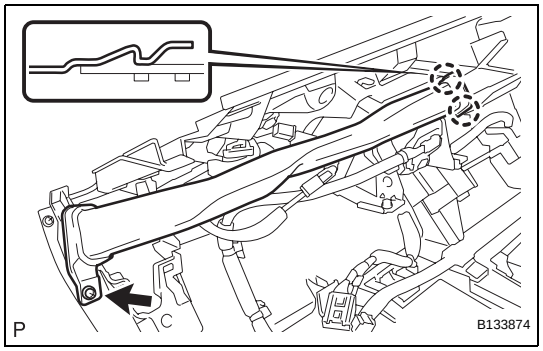

9. INSTALL NO. 1 SIDE DEFROSTER NOZZLE DUCT
(a) Engage the 2 claws and install the side defroster nozzle duct.
(b) Install screw <B>.

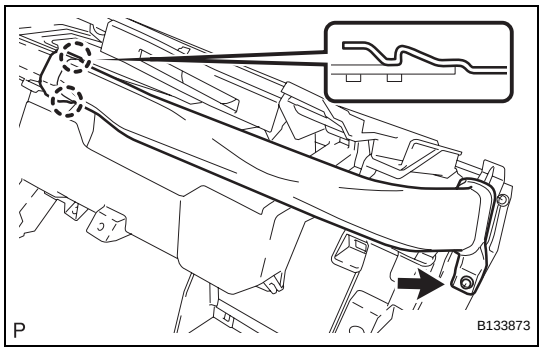

10. INSTALL NO. 2 SIDE DEFROSTER NOZZLE DUCT
(a) Engage the 2 claws and install the side defroster nozzle duct.
(b) Install screw <B>.

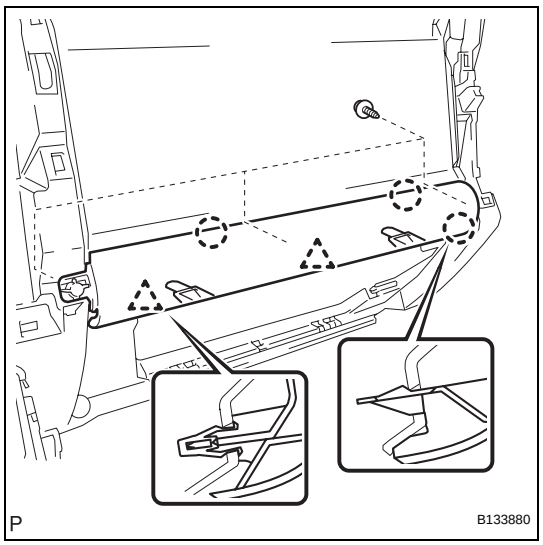

11. INSTALL INSTRUMENT CLUSTER LOWER CENTER FINISH PANEL SUB-ASSEMBLY
(a) Engage the 2 clips and 3 claws and install the instrument cluster lower center finish panel.
(b) Install the 3 <B> screws.

IP

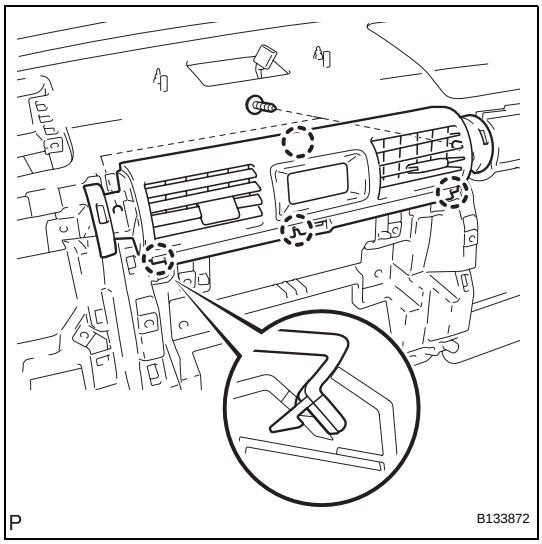

12. INSTALL INSTRUMENT CLUSTER CENTER FINISH PANEL SUB-ASSEMBLY

(a) Engage the 4 claws and install the instrument cluster center finish panel.

(b) Install the 2 <B> screws.

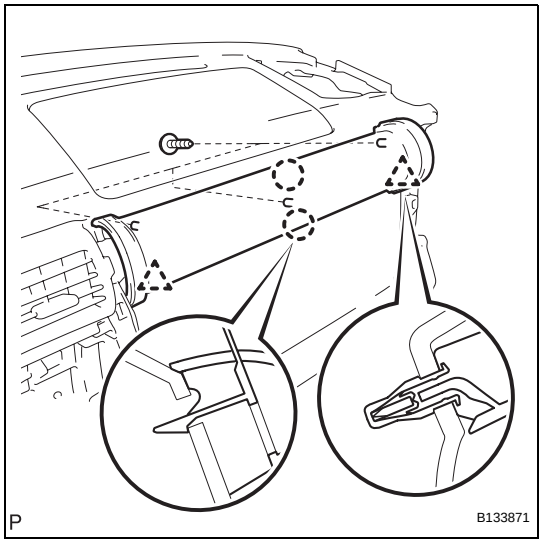

13. INSTALL INSTRUMENT CLUSTER FINISH PANEL SUB-ASSEMBLY

(a) Engage the 2 clips and 2 claws and install the instrument cluster finish panel.

(b) Install the 3 <B> screws.

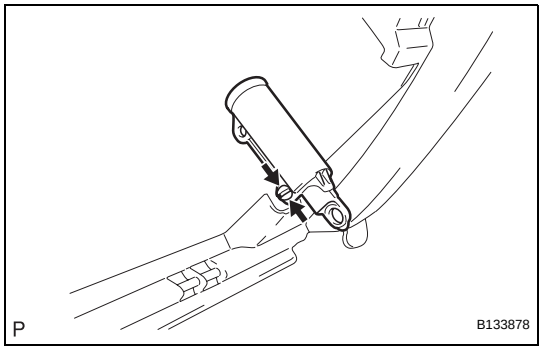

14. INSTALL GLOVE COMPARTMENT DOOR STOPPER SUB-ASSEMBLY

(a) Engage the claw and install the glove compartment door stopper.

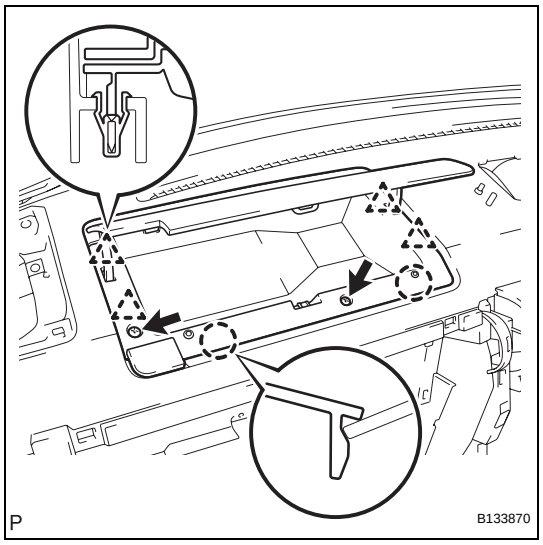

15. INSTALL NO. 2 INSTRUMENT PANEL BOX DOOR SUB-ASSEMBLY

(a) Engage the 4 clips and 2 claws and install the instrument panel box door.

(b) Install the 2 <H> screws.

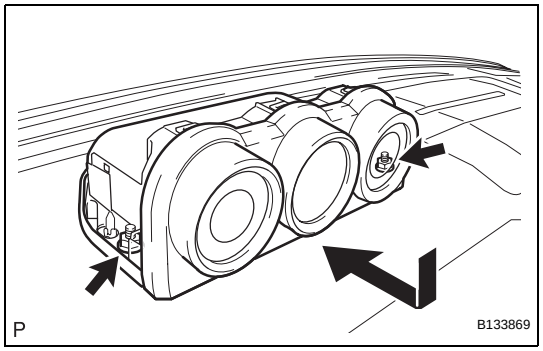

16. INSTALL ACCESSORY METER ASSEMBLY

(a) Install the accessory meter with the 2 nuts.

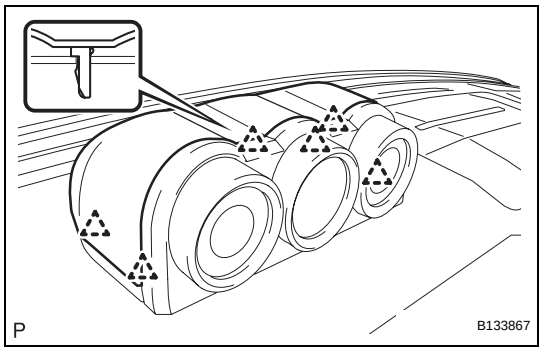

17. INSTALL METER COVER

(a) Engage the 6 clips and install the meter cover.

18. INSTALL INSTRUMENT PANEL SUB-ASSEMBLY

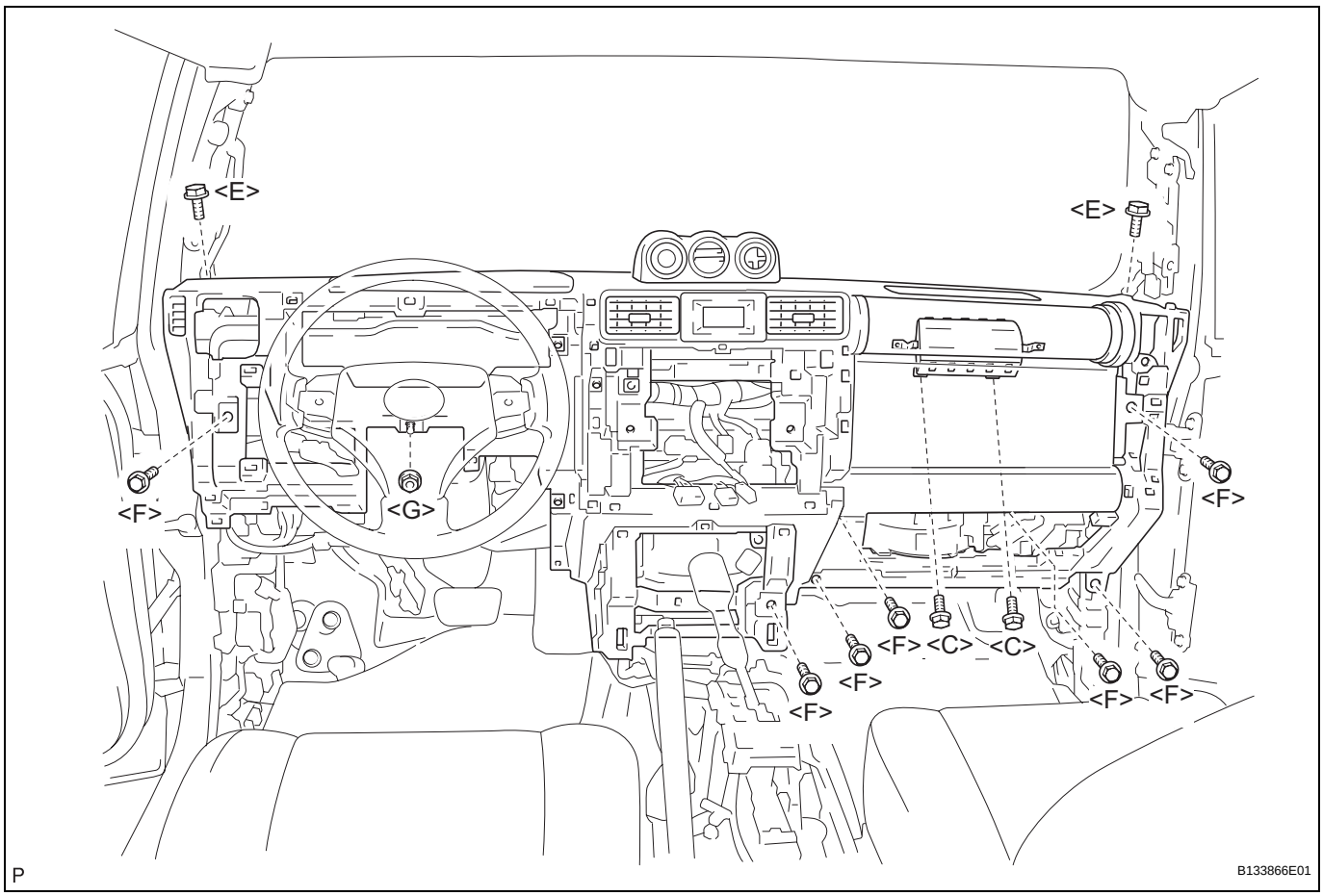

(a) Install the lower instrument panel with the 2 <C> bolts, 2 <E> bolts, 7 <F> bolts and nut <G>.
Torque: 20 N*m (205 kgf*cm, 15 ft.*lbf) for bolt <C>

(b) Engage the clamps and connect the connectors.

19. CONNECT PASSENGER AIRBAG CONNECTOR

(a) Connect the passenger airbag connector.

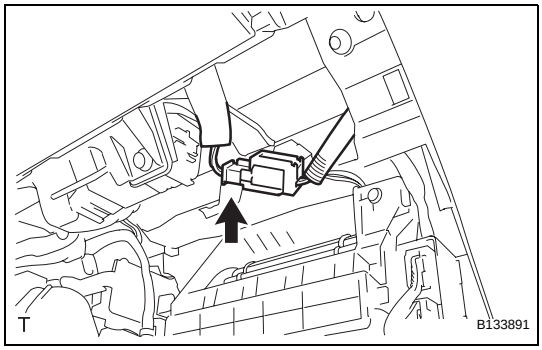

IP

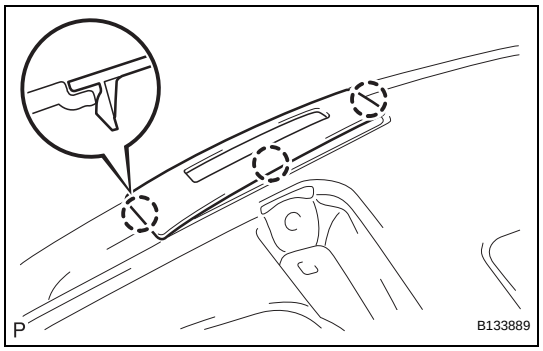

20. INSTALL INSTRUMENT PANEL FINISH PANEL END LH

(a) Engage the 3 claws and install the instrument panel finish panel end.

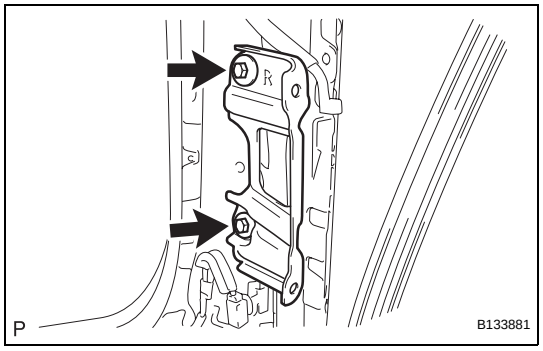

21. INSTALL ASSIST GRIP RETAINER RH

(a) Install the assist grip retainer with the 2 bolts.
Torque: 29 N*m (296 kgf*cm, 21 ft.*lbf)

22. INSTALL ASSIST GRIP RETAINER LH

HINT:
Use the same procedure as for the RH side.

23. INSTALL FRONT NO. 2 SPEAKER ASSEMBLY (See page AV-62)

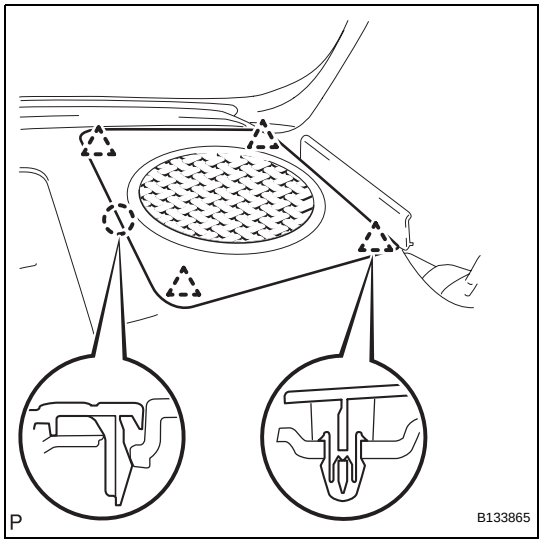

24. INSTALL NO. 2 INSTRUMENT PANEL SPEAKER PANEL SUB-ASSEMBLY

(a) Engage the 4 clips and claw and install the instrument panel speaker panel.

25. INSTALL NO. 1 INSTRUMENT PANEL SPEAKER PANEL SUB-ASSEMBLY

HINT:
Use the same procedure as for the RH side.

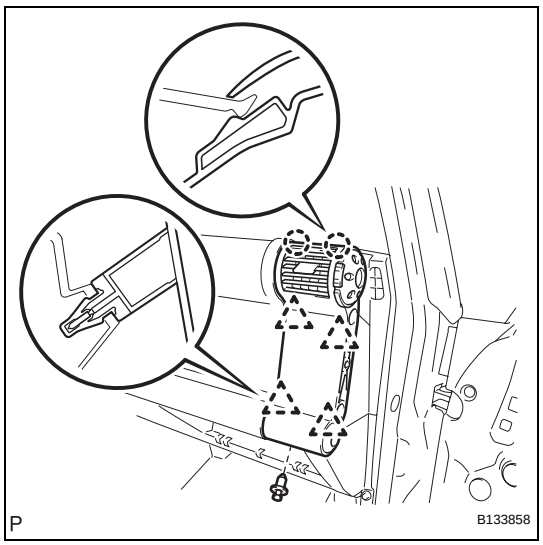

26. INSTALL NO. 2 INSTRUMENT PANEL REGISTER ASSEMBLY

(a) Engage the 4 clips and 2 claws and install the instrument panel register.
(b) Install the clip.

IP

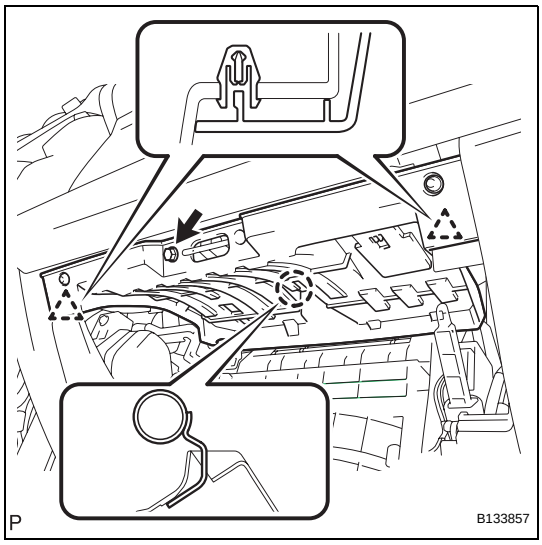

27. INSTALL INSTRUMENT PANEL LOWER FINISH PANEL SUB-ASSEMBLY RH

(a) Install the connectors to the instrument panel lower finish panel.
(b) Engage the claw and 2 clips and install the instrument panel lower finish panel.
(c) Install screw <A>.

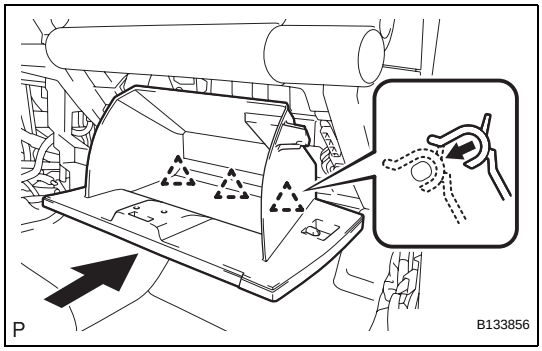

28. INSTALL GLOVE COMPARTMENT DOOR ASSEMBLY

(a) Install the glove compartment door assembly with the 3 hinges while holding it horizontal.

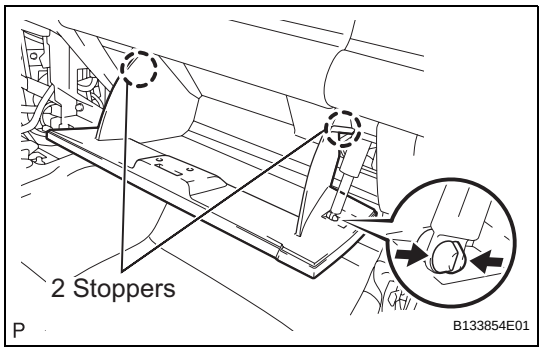

(b) Slightly flex the upper part of the glove compartment door assembly, and install the glove compartment door assembly.
(c) Install the glove compartment door stoppers onto the glove compartment door.

IP

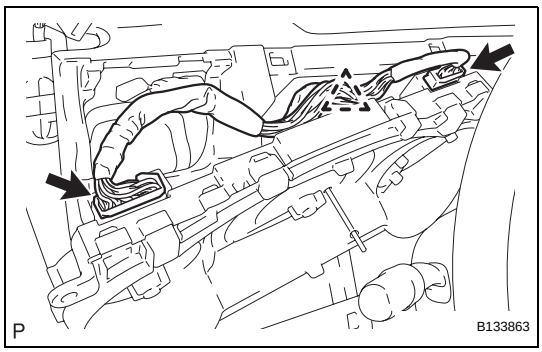

29. INSTALL COMBINATION METER ASSEMBLY

(a) Connect the 2 connectors and the clamp.

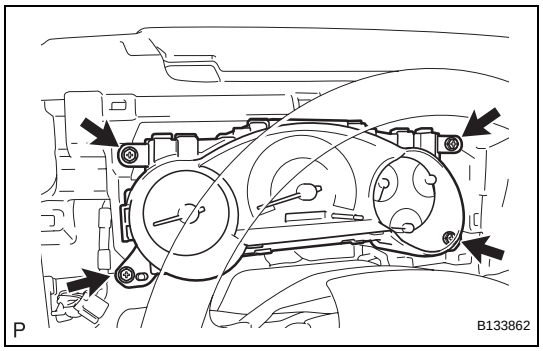

(b) Install the combination meter assembly with the 4 screws.
Torque: 7.0 N*m (71 kgf*cm, 62 in.*lbf)

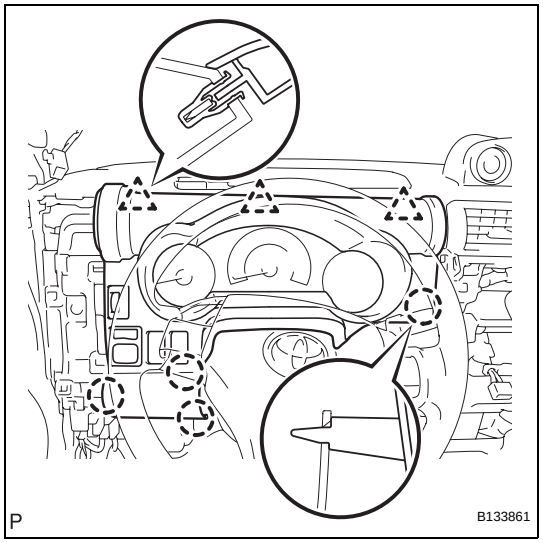

30. INSTALL INSTRUMENT CLUSTER LOWER FINISH PANEL

(a) Connect the connectors.
(b) Engage the 3 clips and 4 claws and install the instrument cluster lower finish panel.

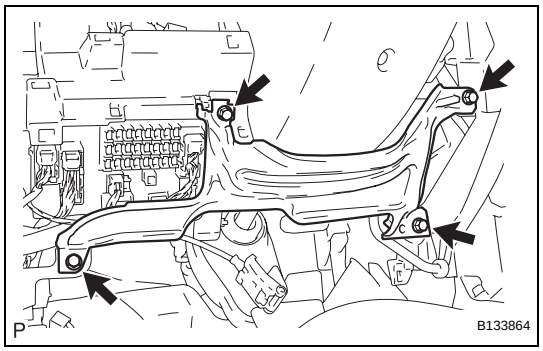

31. INSTALL LOWER INSTRUMENT PANEL LH

(a) Install the lower instrument panel with the 4 <F> bolts.

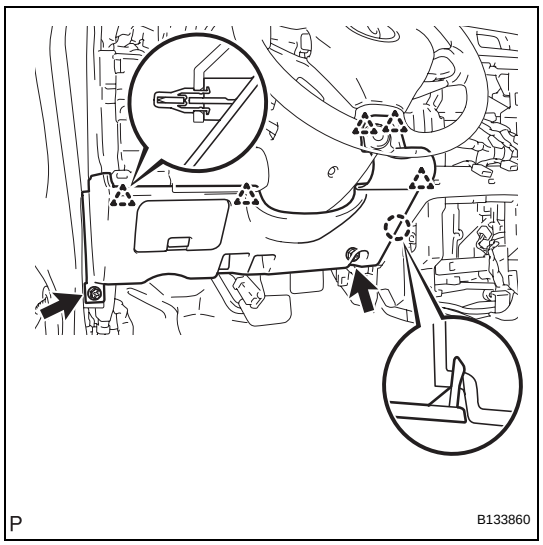

32. INSTALL LOWER INSTRUMENT PANEL FINISH PANEL SUB-ASSEMBLY LH

(a) Engage the 5 clips and claw and install the lower instrument panel finish panel.
(b) Install the 2 <F> bolts.

IP

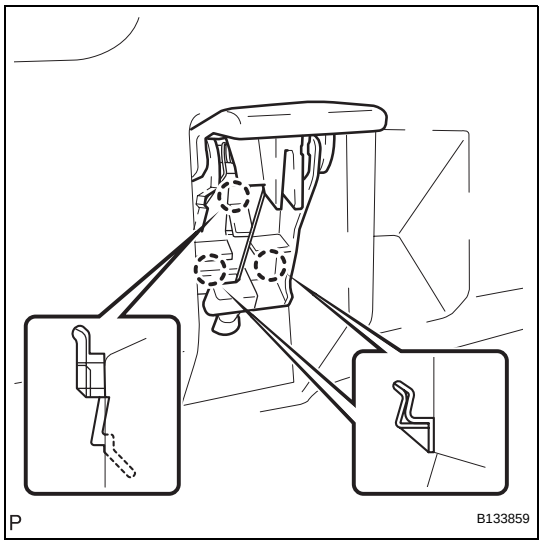

33. CONNECT HOOD LOCK CONTROL LEVER SUB-ASSEMBLY

(a) Engage the 3 claws and install the hood lock control lever.

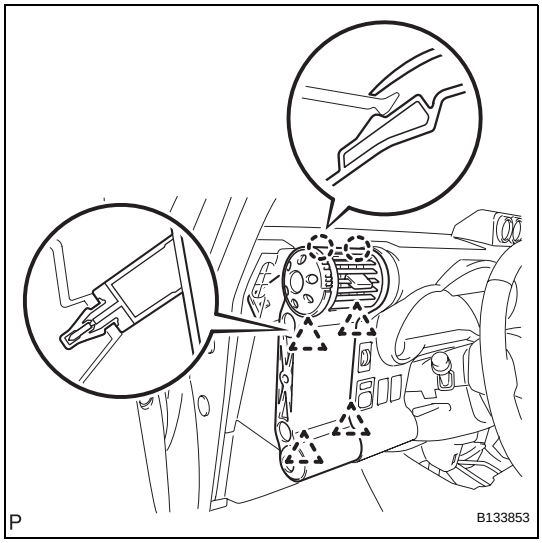

34. INSTALL NO. 1 INSTRUMENT PANEL REGISTER ASSEMBLY

(a) Engage the 4 clips and 2 claws and install the instrument panel register.

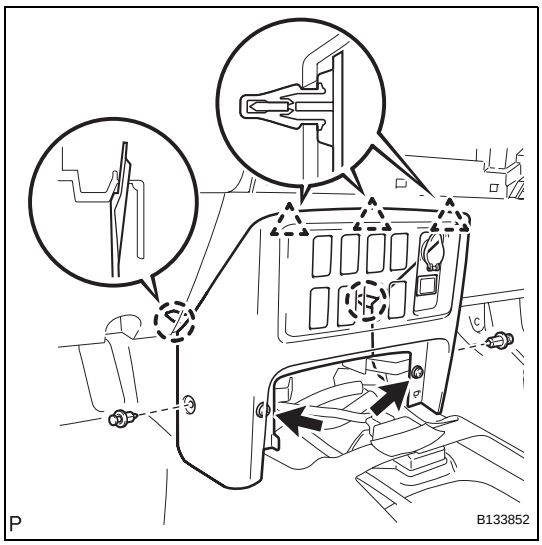

35. INSTALL INSTRUMENT LOWER COVER SUB-ASSEMBLY

(a) Engage the 3 clips and 2 claws and install the instrument lower cover.

(b) Install the 2 <F> bolts and 2 clips.

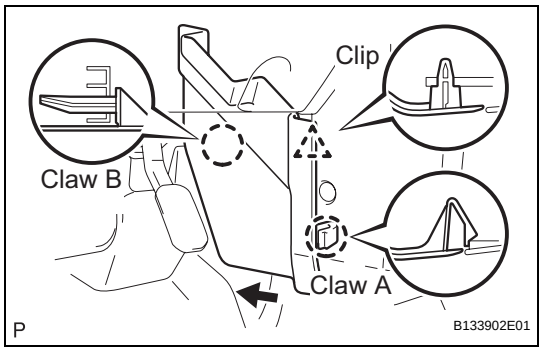

36. INSTALL CONSOLE UPPER PANEL NO. 1 GARNISH

(a) Slide the console upper panel garnish toward the front of the vehicle and engage claw B.

(b) Engage the claw and clip and install the console upper panel garnish.

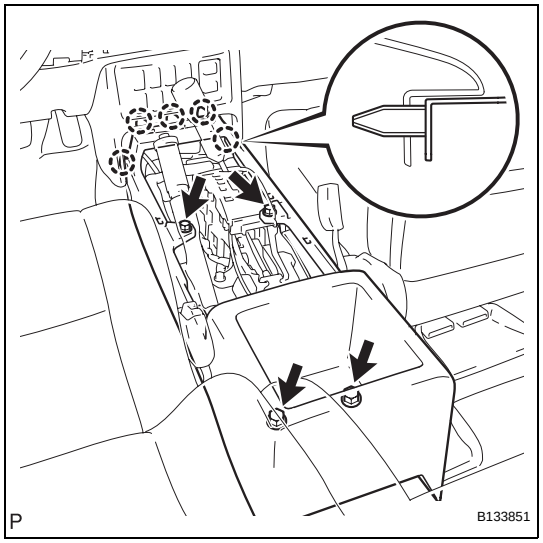

37. INSTALL FRONT CONSOLE BOX

(a) Engage the 5 claws and install the front console box.

(b) Install the 4 <D> screws.

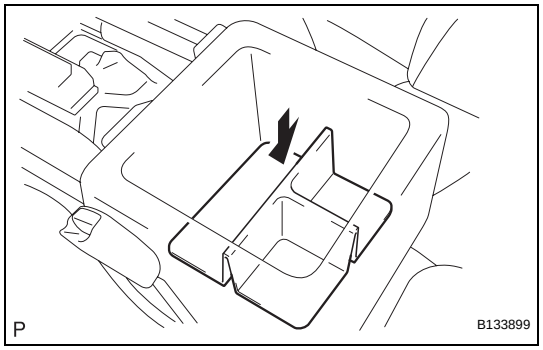

38. INSTALL BOX BOTTOM MAT

(a) Install the box bottom mat.

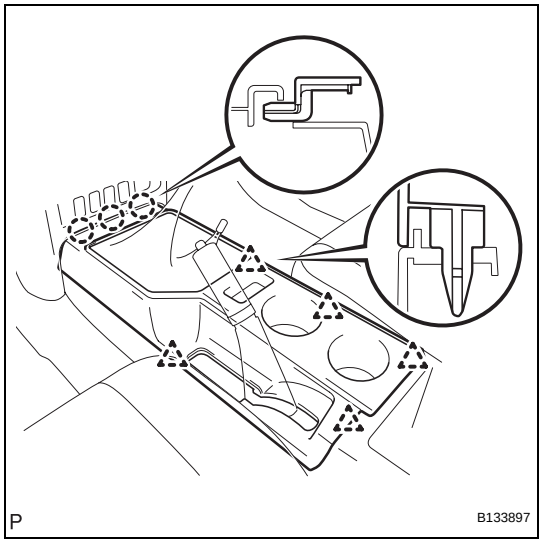

39. INSTALL CONSOLE UPPER REAR PANEL SUB-ASSEMBLY

(a) Engage the 3 claws and 5 clips and install the console upper rear panel.

IP

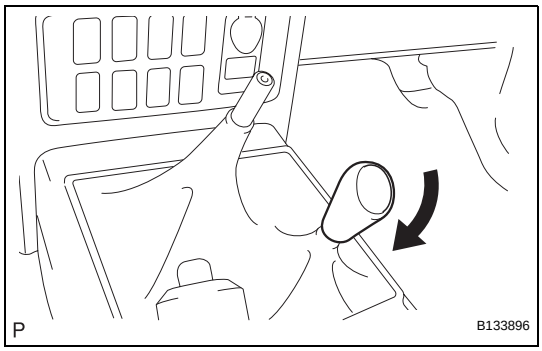

40. INSTALL SHIFT LEVER KNOB SUB-ASSEMBLY (for 4WD)

(a) Install the shift lever knob.

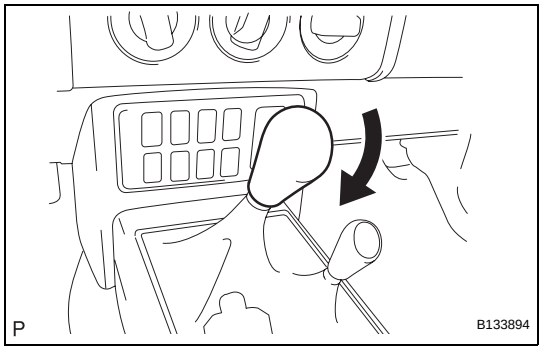

41. INSTALL SHIFT LEVER KNOB SUB-ASSEMBLY (for Manual Transmission)

(a) Install the shift lever knob.

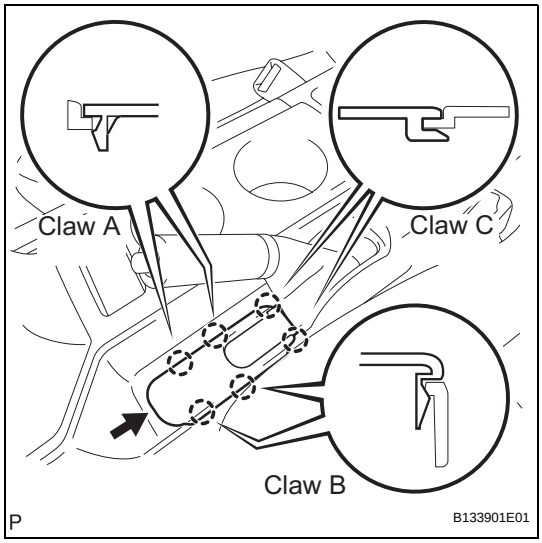

42. INSTALL PARKING BRAKE HOLE COVER SUB-ASSEMBLY

(a) Slide the parking brake hole cover toward the rear of the vehicle and engage the 2 C claws.

(b) Engage the 4 claws and install the parking brake hole cover.

43. INSTALL RADIO RECEIVER ASSEMBLY (See page AV-56)

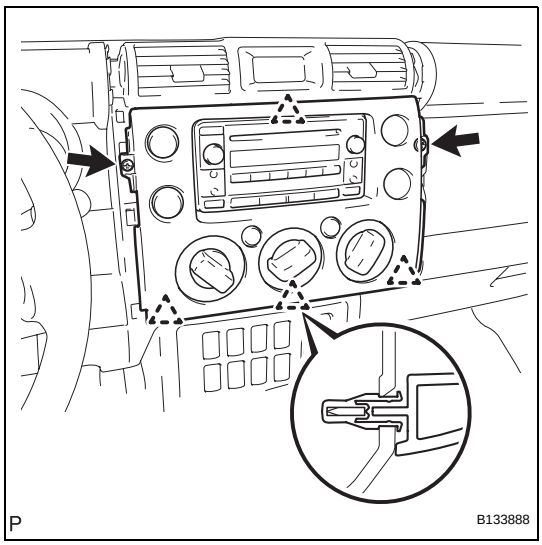

44. INSTALL INTEGRATION CONTROL AND PANEL ASSEMBLY

(a) Connect the 3 connectors.

(b) Engage the 4 clips and install the integration control panel assembly.

(c) Install the 2 <H> screws.

IP

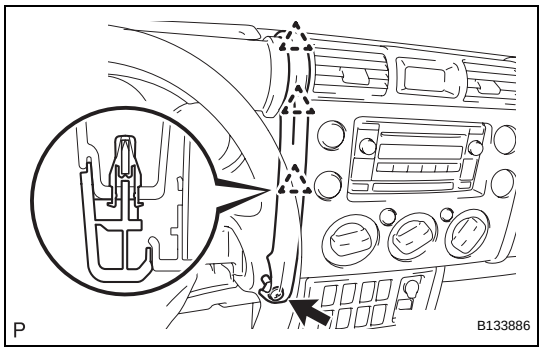

45. **INSTALL INSTRUMENT PANEL GARNISH LH**
    (a) Engage the 3 clips and install the instrument panel garnish.
    (b) Install 2 <H> screws.

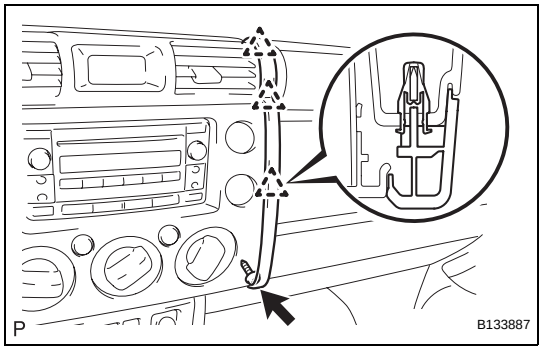

46. **INSTALL INSTRUMENT PANEL GARNISH RH**
    (a) Engage the 3 clips and install the instrument panel garnish.
    (b) Install screw <H>.
47. **INSTALL FRONT PILLAR GARNISH RH (See page IR-43)**
48. **INSTALL FRONT PILLAR GARNISH LH (See page IR-43)**
49. **INSTALL ASSIST GRIP ASSEMBLY (See page IR-43)**
50. **INSTALL ASSIST GRIP PLUG (See page IR-44)**
51. **INSTALL FRONT DOOR OPENING TRIM WEATHERSTRIP LH**
    (a) Install the front door opening trim weatherstrip.
52. **INSTALL FRONT DOOR OPENING TRIM WEATHERSTRIP RH**
    (a) Install the front door opening trim weatherstrip.
53. **INSTALL COWL SIDE TRIM BOARD RH (See page IR-45)**
54. **INSTALL COWL SIDE TRIM BOARD LH (See page IR-45)**
55. **INSTALL FOOTREST CLIP (See page IR-2)**
56. **INSTALL FRONT FLOOR FOOTREST (See page IR-2)**
57. **INSTALL FRONT DOOR SCUFF PLATE RH (See page IR-45)**
58. **INSTALL FRONT DOOR SCUFF PLATE LH (See page IR-45)**
59. **CONNECT CABLE TO NEGATIVE BATTERY TERMINAL**
    Torque: 3.9 N*m (40 kgf*cm, 35 in.*lbf)
60. **INSPECT SRS WARNING LIGHT**
    (See page RS-29)

INTAKE SYSTEM

PARTS LOCATION

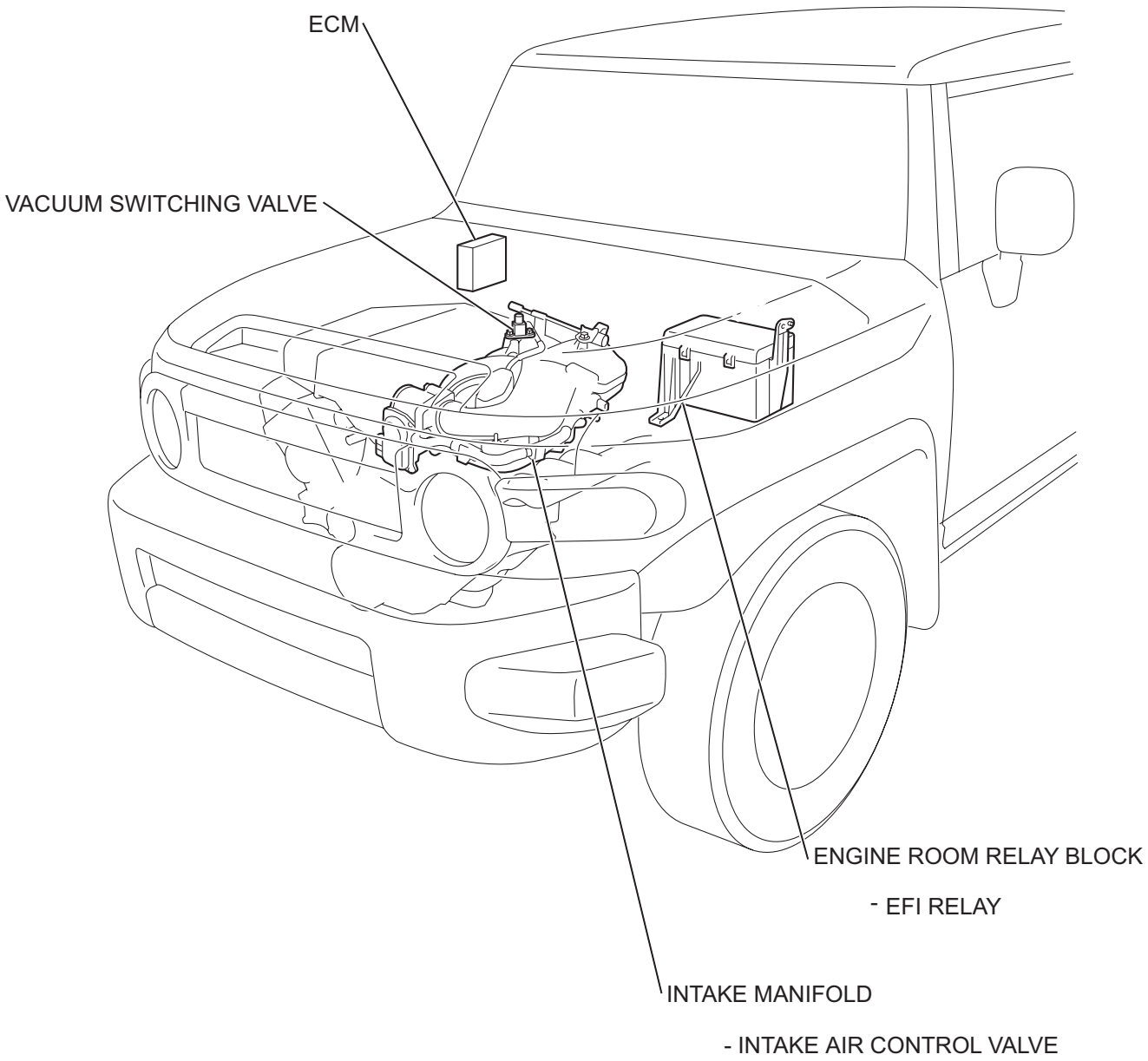

SYSTEM DIAGRAM

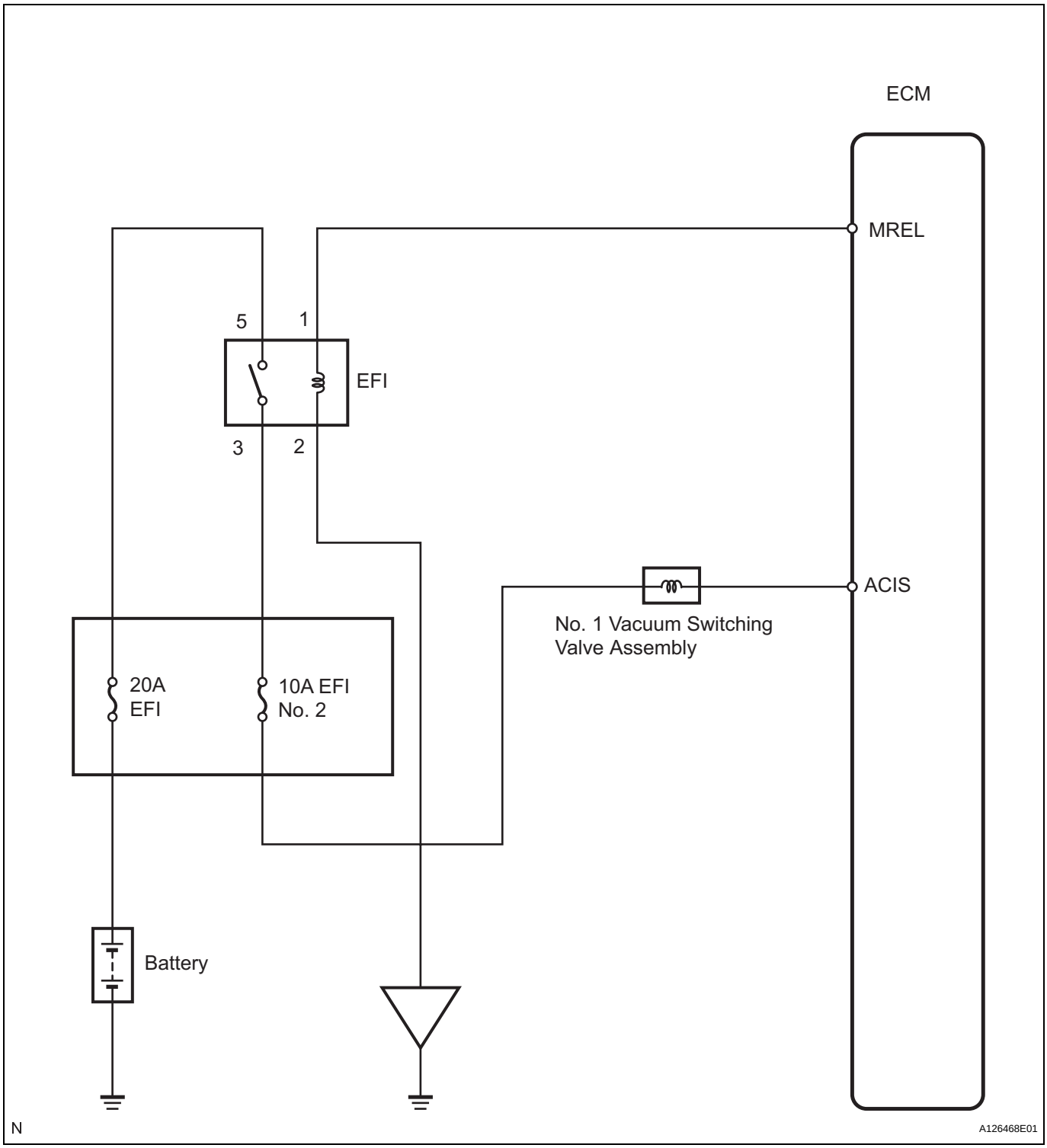

ON-VEHICLE INSPECTION

1. INSPECT INTAKE AIR CONTROL FUNCTION

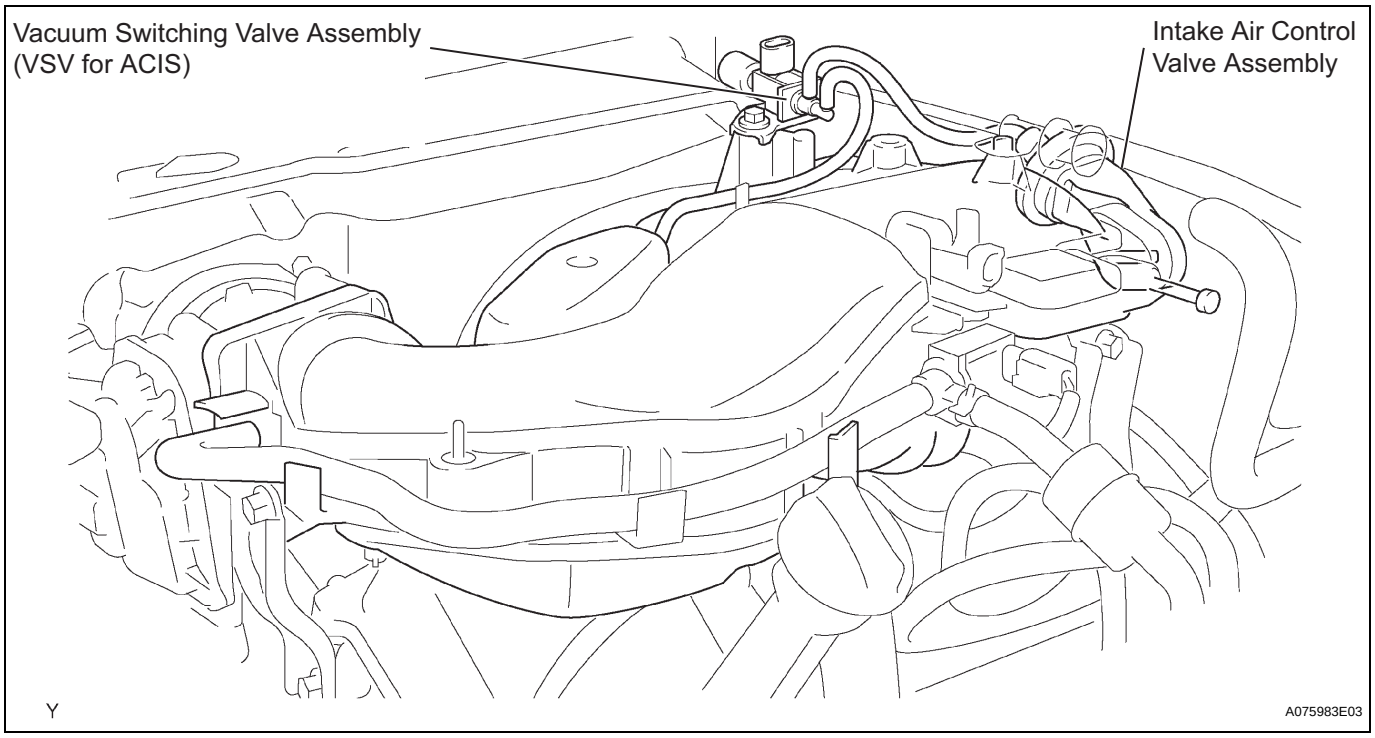

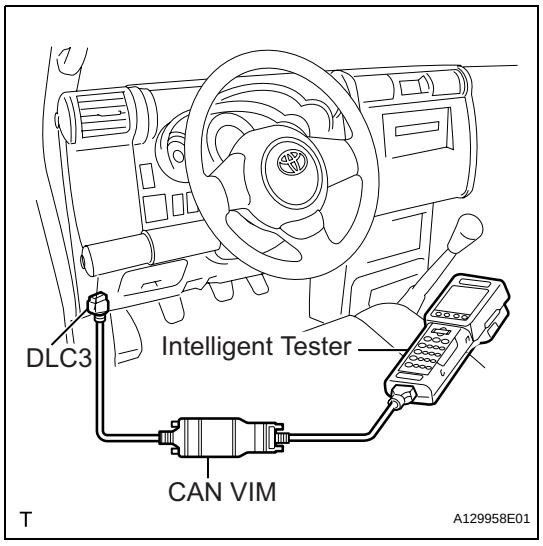

(a) Remove the V-bank cover.
(b) Warm up the engine.
(c) Turn the ignition switch OFF.
(d) Connect the intelligent tester to the DLC3.
(e) Start the engine and allow it to idle.
(f) Turn the intelligent tester ON.
(g) Select the following menu items: DIAGNOSIS / ENHANCED OBD II / ACTIVE TEST / INTAKE CTL VSV1 / ON.
    (1) Check that the intake air control valve is pulled out.
    If the intake air control valve does not operate, replace the VSV for ACIS or intake air surge tank.
(h) Select the following menu items: DIAGNOSIS / ENHANCED OBD II / ACTIVE TEST / INTAKE CTL VSV1 / OFF.
    (1) Check that the intake air control valve is returned to its original position.
    If the intake air control valve does not operate, replace the VSV for ACIS or intake air surge tank.

(i) Select the following menu items: DIAGNOSIS / ENHANCED OBD II / DATA LIST / ENGINE SPD, THROTTLE POS, INTAKE CTL VSV1, and INTAKE CTL VSV2.
   (1) When depressing the accelerator pedal to the 60 % accelerator opening angle and running the engine at a speed of 2,200 to 4,100 rpm, check that the VSV for ACIS is ON.
   If the intake air control valve does not operate, replace the VSV for ACIS.
   (2) Under the conditions described in step (1), or while the engine is idling, release the accelerator pedal and check that the VSV for ACIS is OFF.
   If the intake air control valve does not operate, replace the VSV for ACIS.

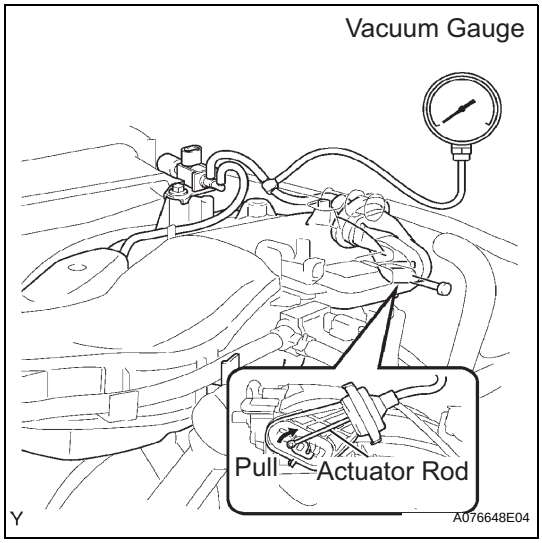

2. INSPECT INTAKE AIR CONTROL VALVE

(a) Remove the V-bank cover (See page ES-428).
(b) Using a 3-way connector, connect a vacuum gauge to the actuator hose.
(c) Start the engine.
(d) While the engine is idling, check that the vacuum gauge needle momentarily fluctuates up to approximately 39.9 kPa (300 mmHg, 11.8 in.Hg). (The actuator rod is pulled out.)
If the intake air control valve does not operate, replace the intake air surge tank.
(e) Rapidly depress the accelerator pedal to the fully open position and check that the vacuum gauge needle points to 0 kPa (0 mmHg, 0 in.Hg). (The actuator rod is returned to its original position.)
If the intake air control valve does not operate, replace the intake air surge tank.

VACUUM SWITCHING VALVE

COMPONENTS

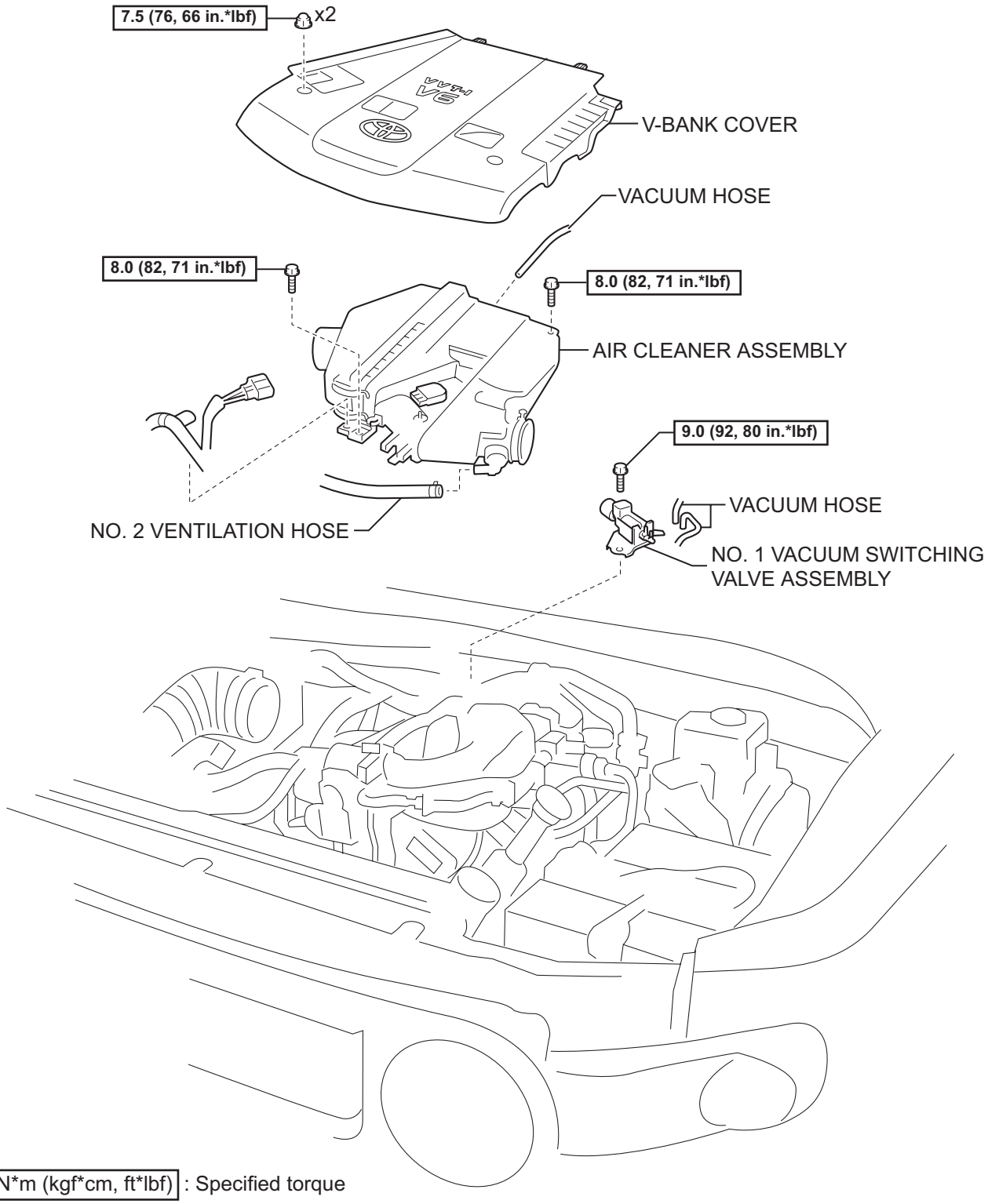

IT

REMOVAL

1. **DISCONNECT CABLE FROM NEGATIVE BATTERY TERMINAL**
2. **REMOVE V-BANK COVER (See page ES-428)**
3. **REMOVE AIR CLEANER ASSEMBLY (See page ES-429)**
4. **REMOVE NO. 1 VACUUM SWITCHING VALVE ASSEMBLY**
   (a) Disconnect the connector.
   (b) Disconnect the 2 vacuum hoses.
   (c) Remove the bolt and No. 1 vacuum switching valve from the intake air surge tank.

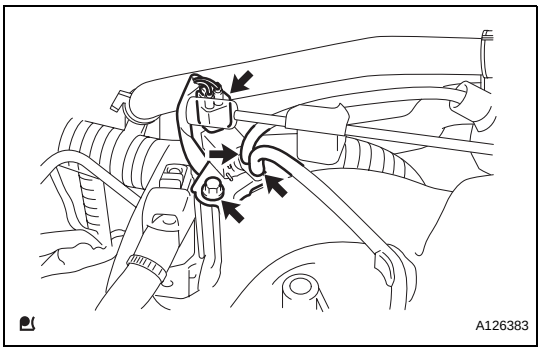

INSPECTION

1. **INSPECT NO. 1 VACUUM SWITCHING VALVE ASSEMBLY**
   (a) Check the resistance.
      (1) Using an ohmmeter, measure the resistance between the terminals.
      Standard resistance

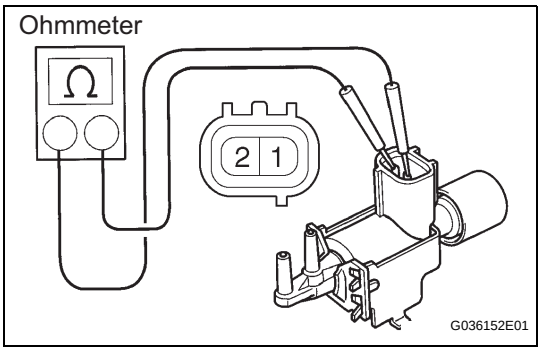

Tester Connection	Specified Condition
1 - 2	33 to 39Ω at 20°C (68°F)

If the result is not as specified, replace the vacuum switching valve No. 1.

   (b) Check the vacuum switching valve No. 1 for ground.
      (1) Using an ohmmeter, measure the resistance between each terminal and the body.
      Standard resistance

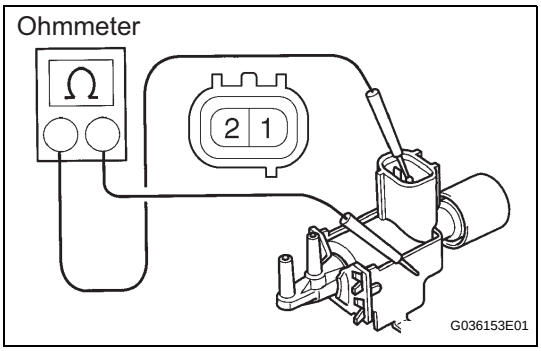

Tester Connection	Specified Condition
1 - Body	10 kΩ or higher
2 - Body	10 kΩ or higher

If the result is not as specified, replace the vacuum switching valve No. 1.

   (c) Check the operation.
      (1) Check that air does not flow from port E to port F.
      If the operation is not as specified, replace the vacuum switching valve No. 1.

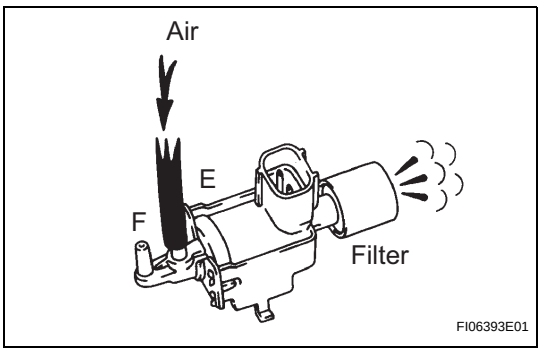

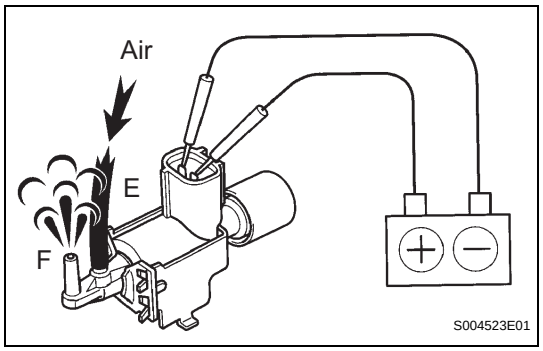

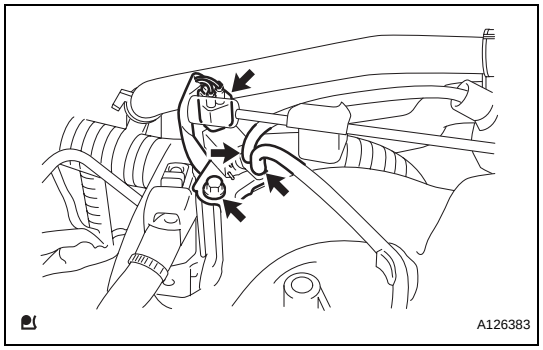

(2) Apply battery voltage across the terminals.
(3) Check that air flows from port E to port F.
If the operation is not as specified, replace the vacuum switching valve No. 1.

INSTALLATION

1. **INSTALL NO. 1 VACUUM SWITCHING VALVE ASSEMBLY**
   (a) Install the No. 1 vacuum switching valve with the bolt onto the intake air surge tank.
   Torque: 9.0 N*m (92 kgf*cm, 80 in.*lbf)
   (b) Connect the 2 vacuum hoses.
   (c) Connect the connector.
2. **INSTALL AIR CLEANER ASSEMBLY (See page ES-431)**
3. **CONNECT CABLE TO NEGATIVE BATTERY TERMINAL**
   Torque: 3.9 N*m (40 kgf*cm, 35 in.*lbf)
4. **INSTALL V-BANK COVER (See page ES-431)**

FRONT FLOOR FOOTREST

COMPONENTS

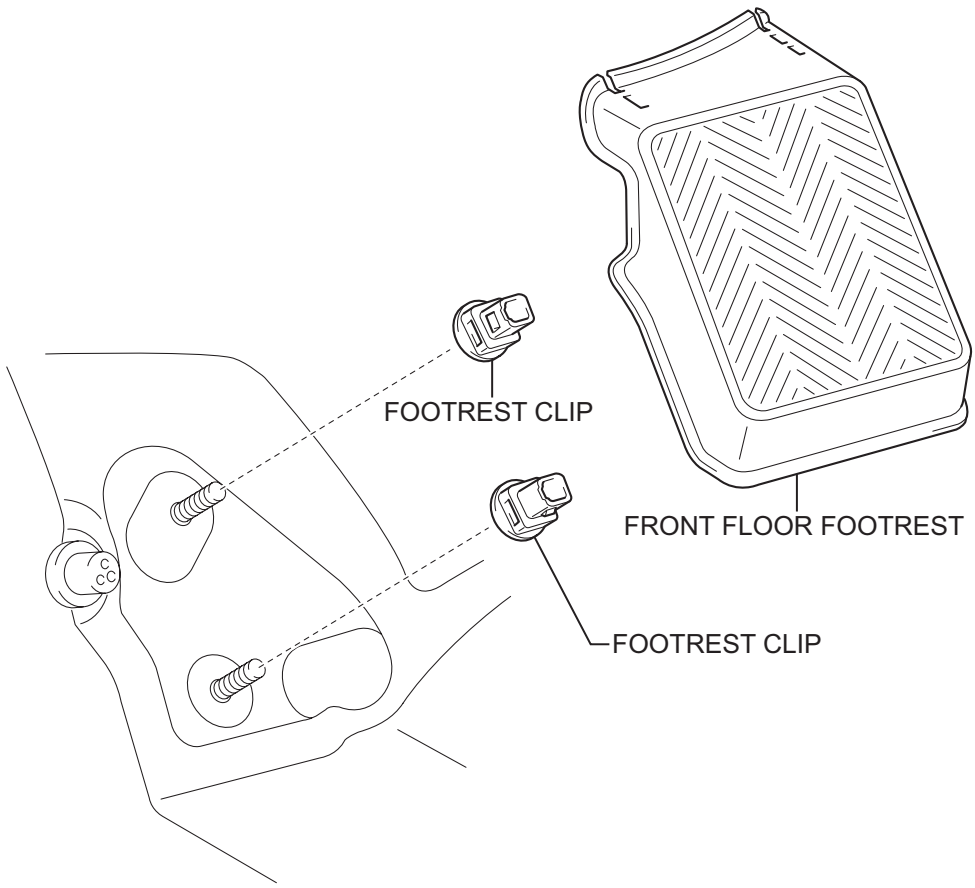

Y

B130585E01

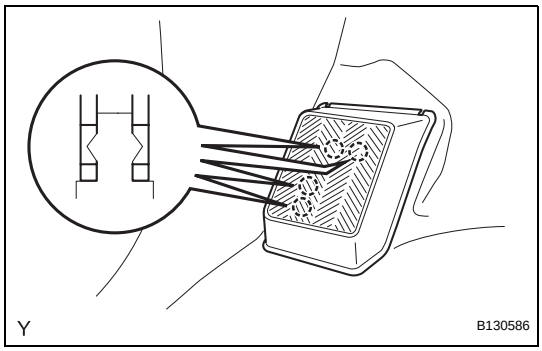

REMOVAL

1. REMOVE FRONT FLOOR FOOTREST

(a) Disengage the 4 claws and remove the front floor footrest.

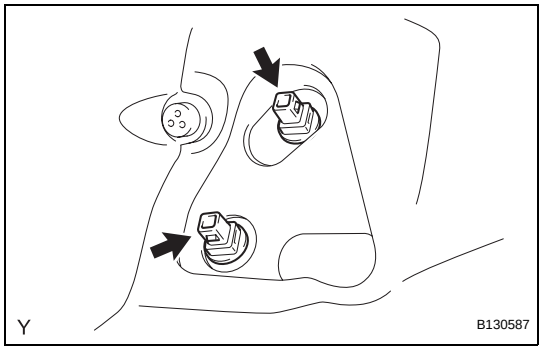

2. REMOVE FOOTREST CLIP

(a) Remove the 2 footrest clips.

INSTALLATION

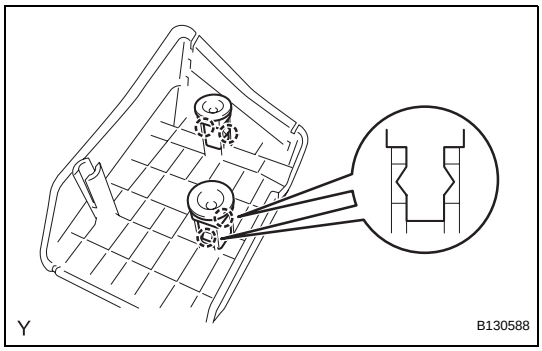

1. INSTALL FOOTREST CLIP

HINT:

Use the same procedure for both sides.

(a) Engage the 2 claws and install the footrest clip.

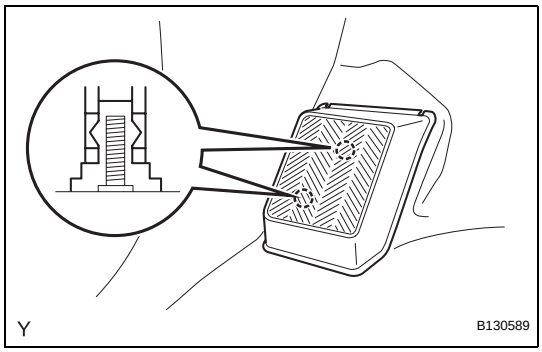

2. INSTALL FRONT FLOOR FOOTREST

(a) Engage the 2 studs and install the front floor footrest.

ROOF HEADLINING

COMPONENTS

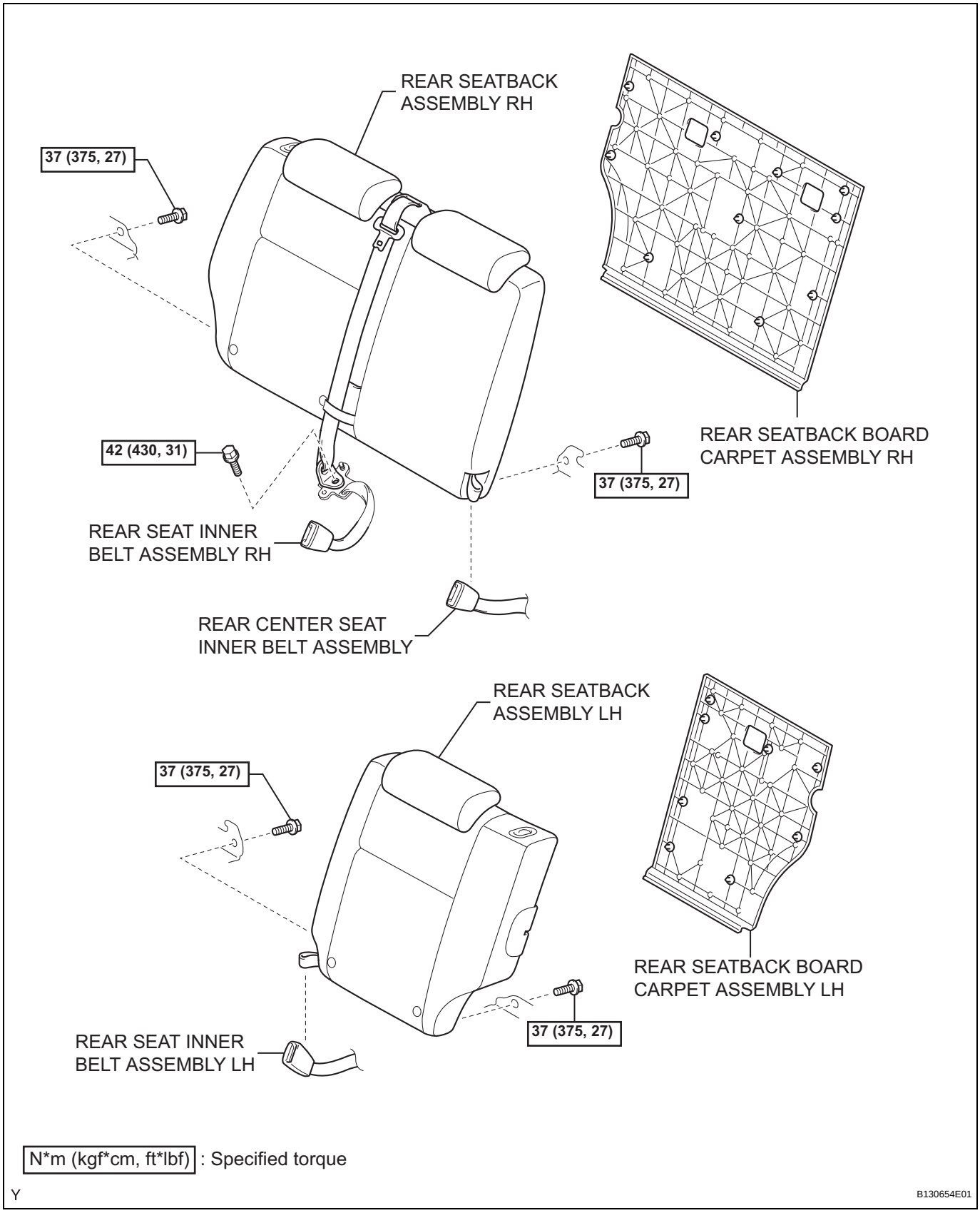

IR

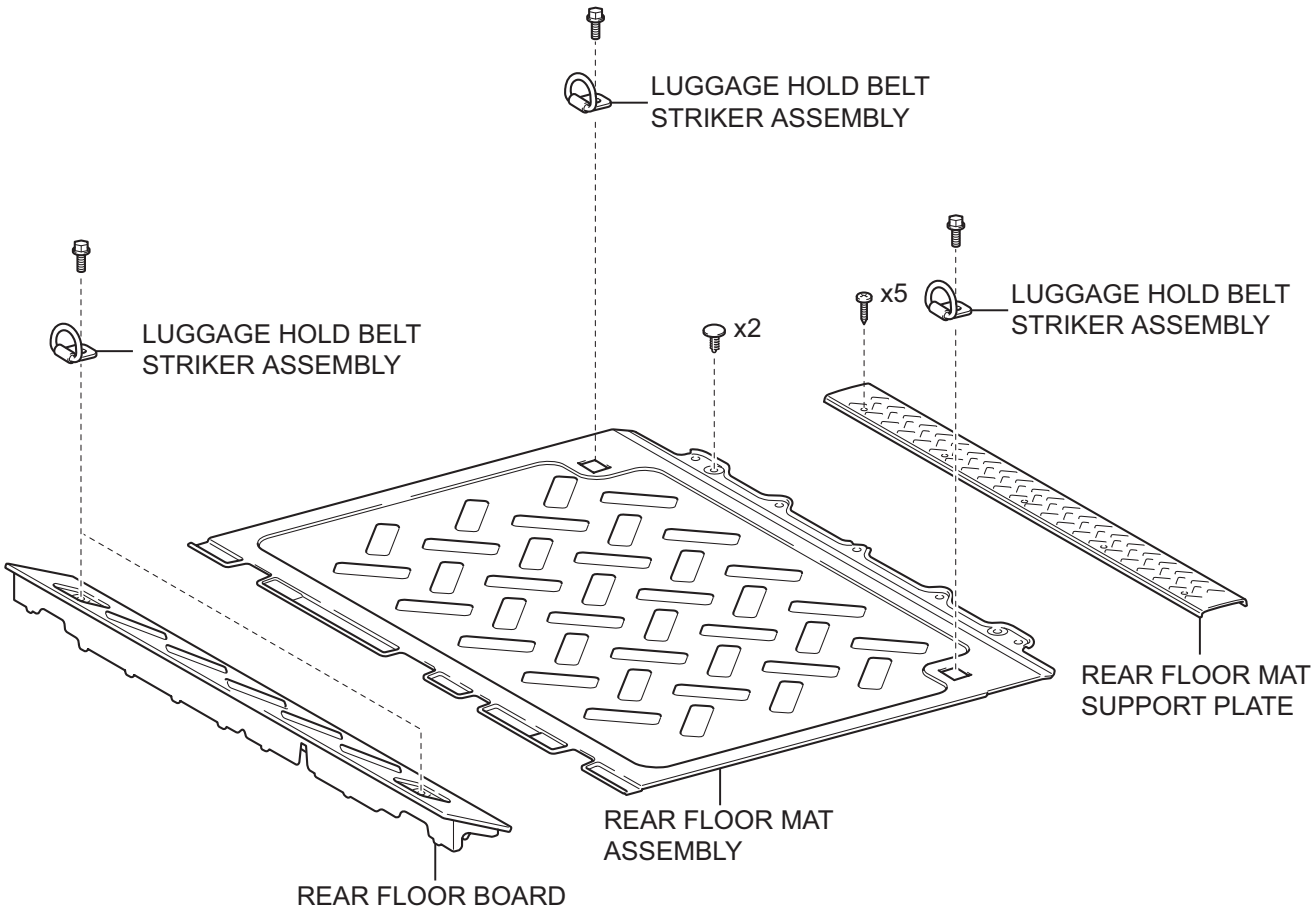

Y

B130655E01

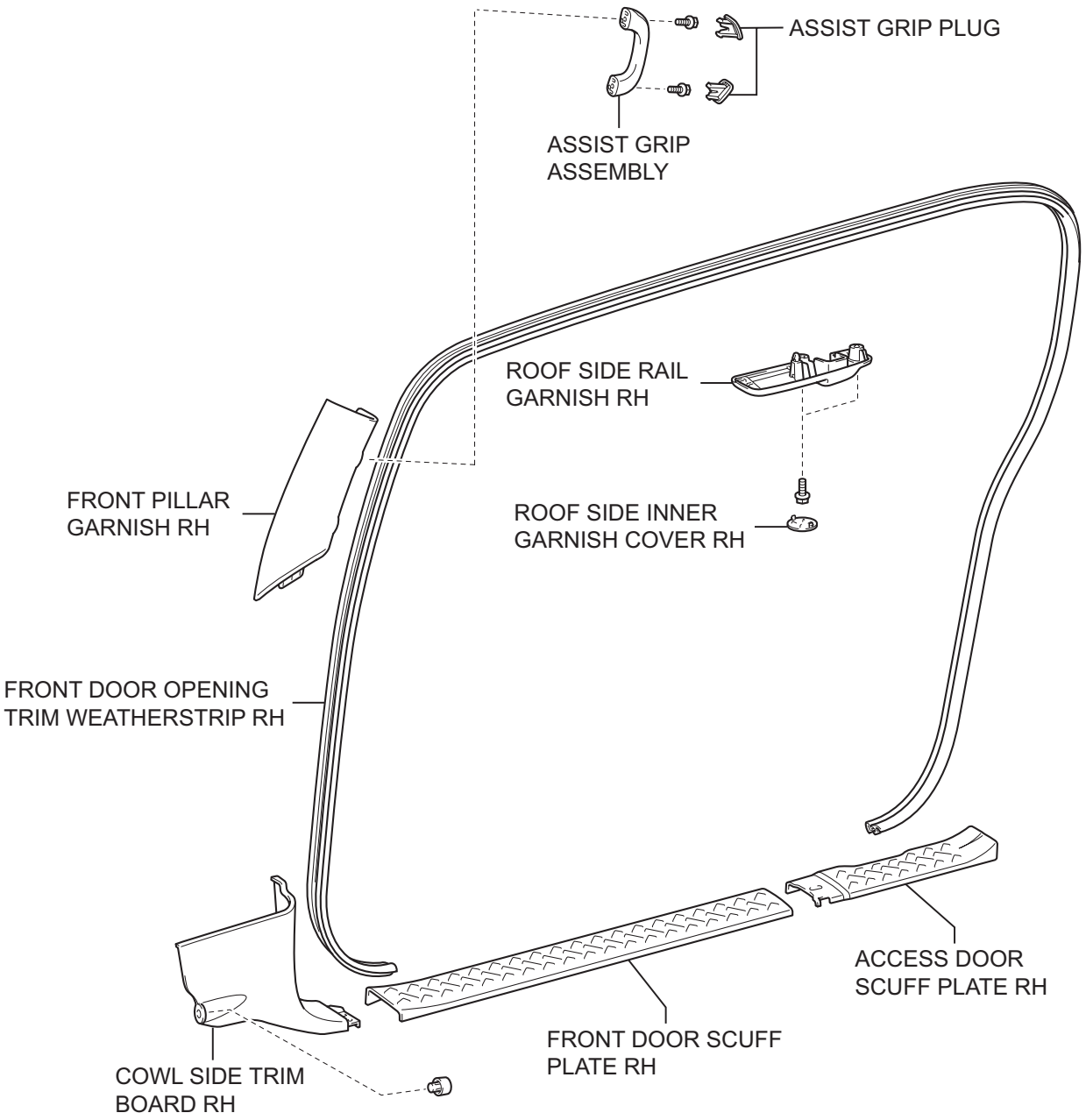

Y

B130656E01

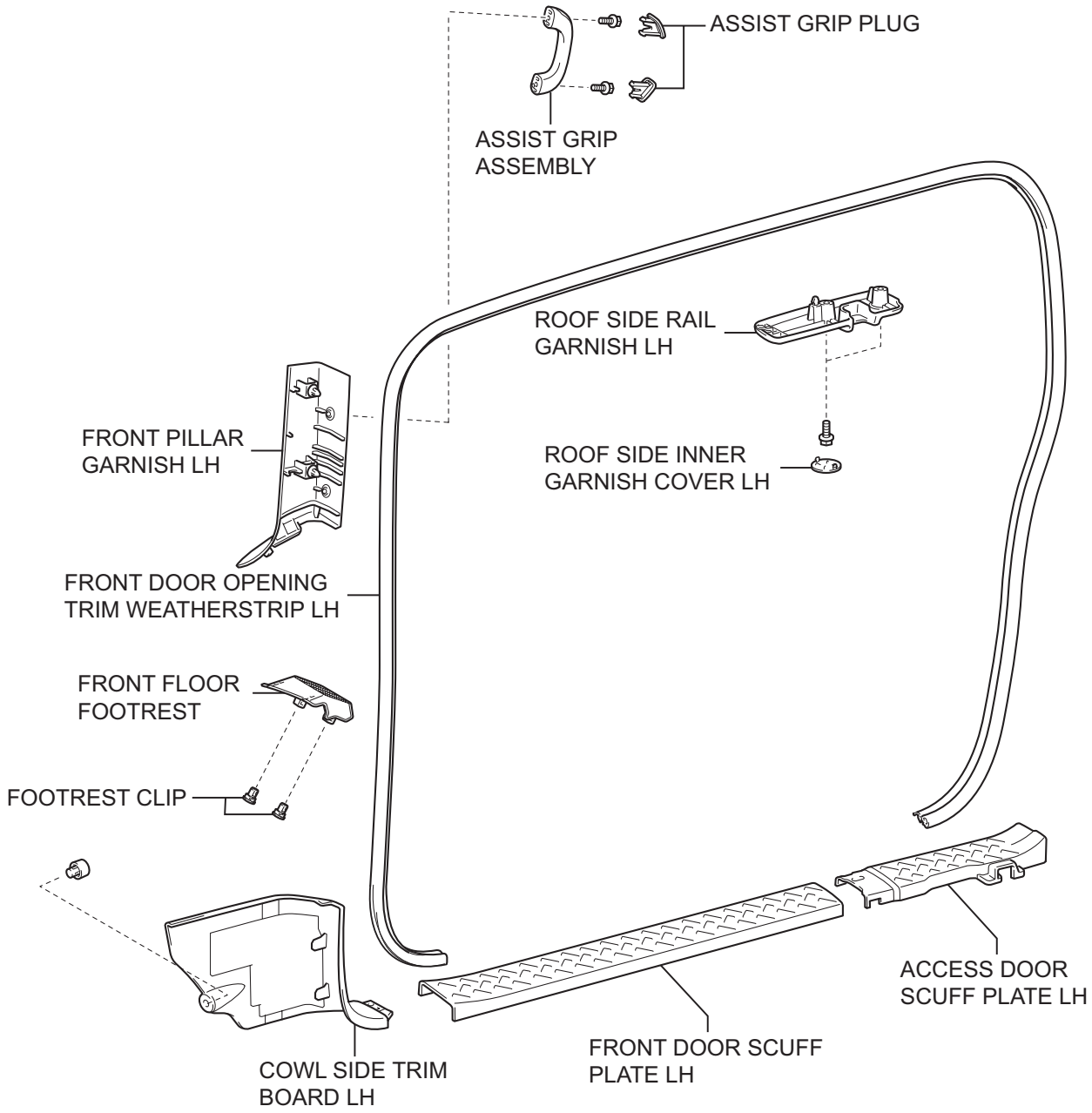

Y

B130657E01

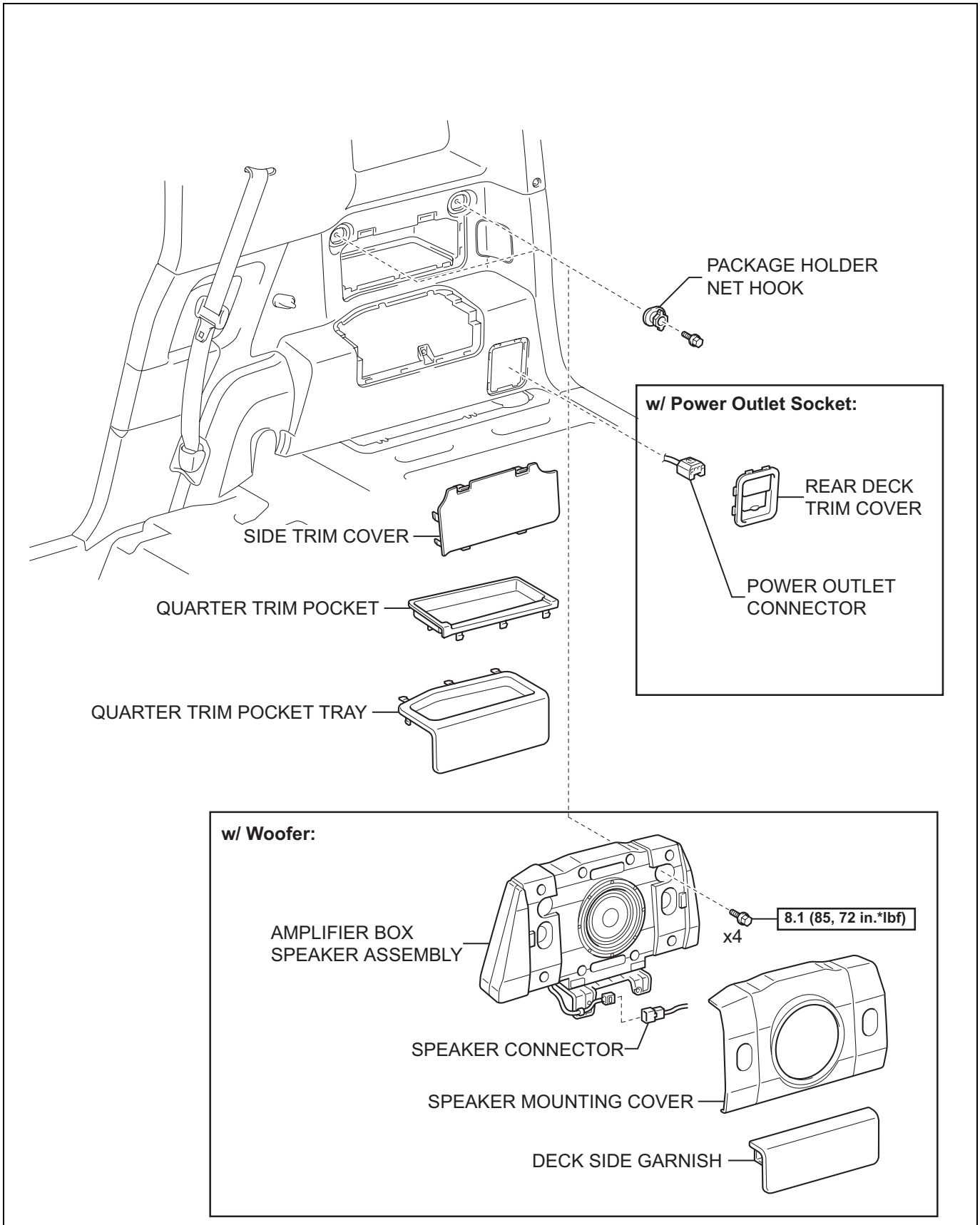

N*m (kgf*cm, ft*lbf) : Specified torque

Y

B134989E01

IR

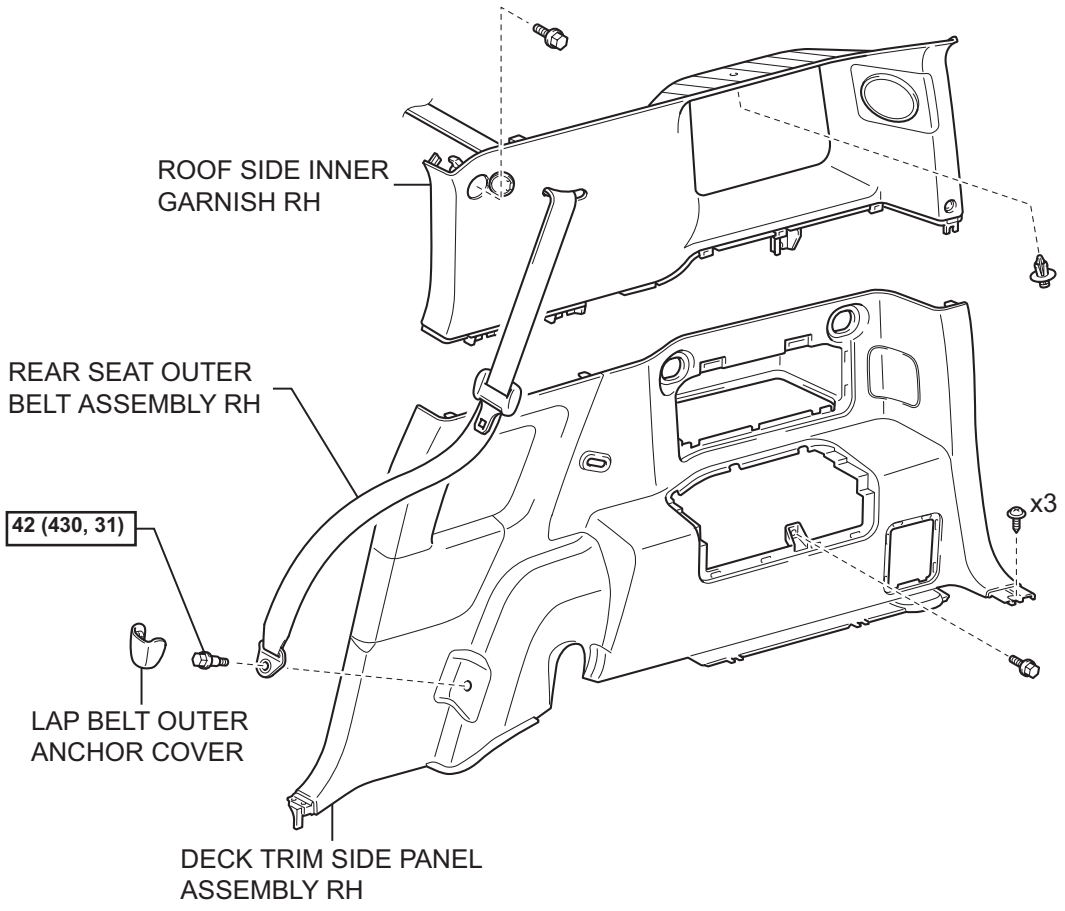

IR

N*m (kgf*cm, ft*lbf) : Specified torque

Y

B130658E01

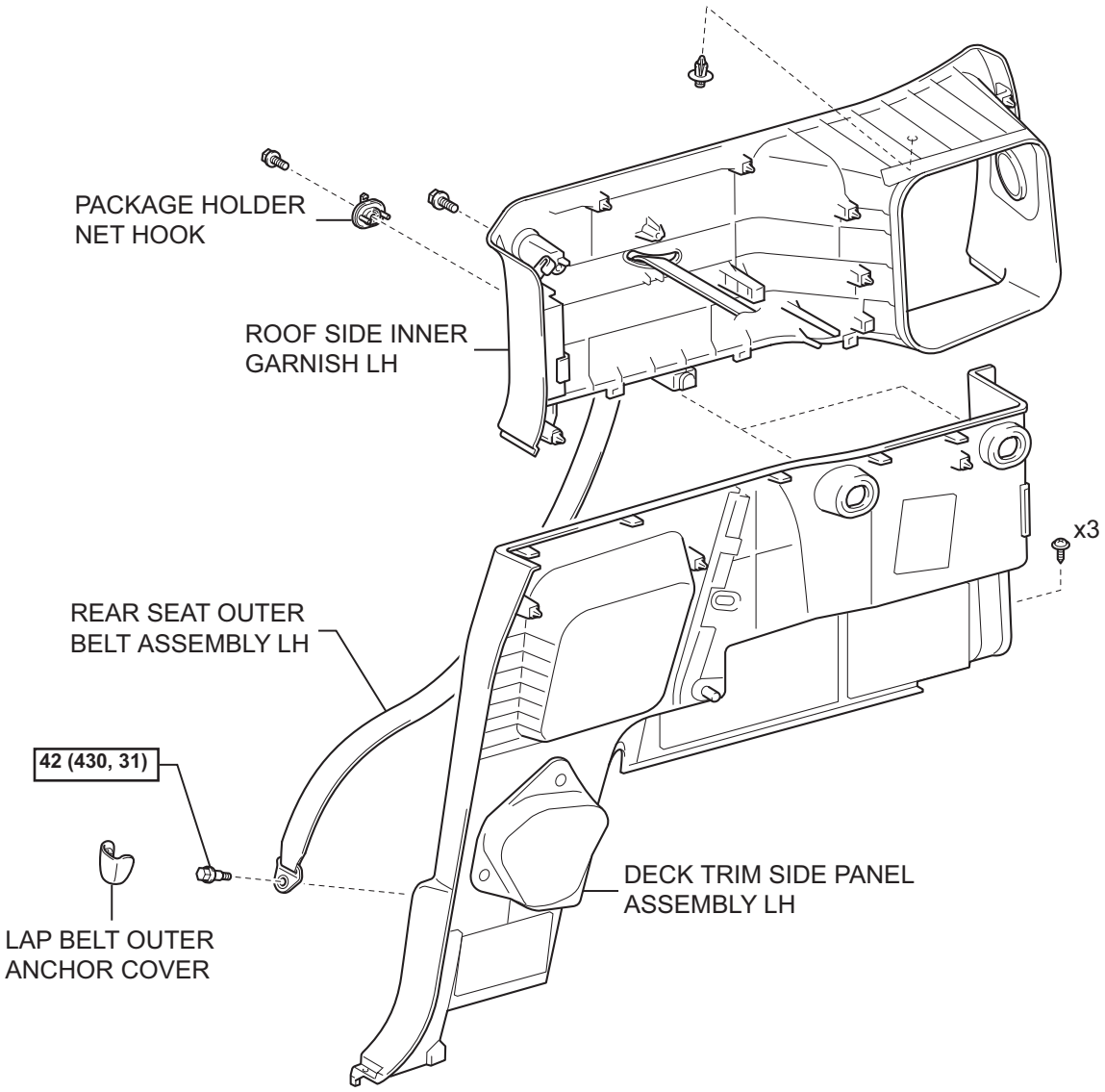

N*m (kgf*cm, ft*lbf) : Specified torque

Y

B130659E01

IR

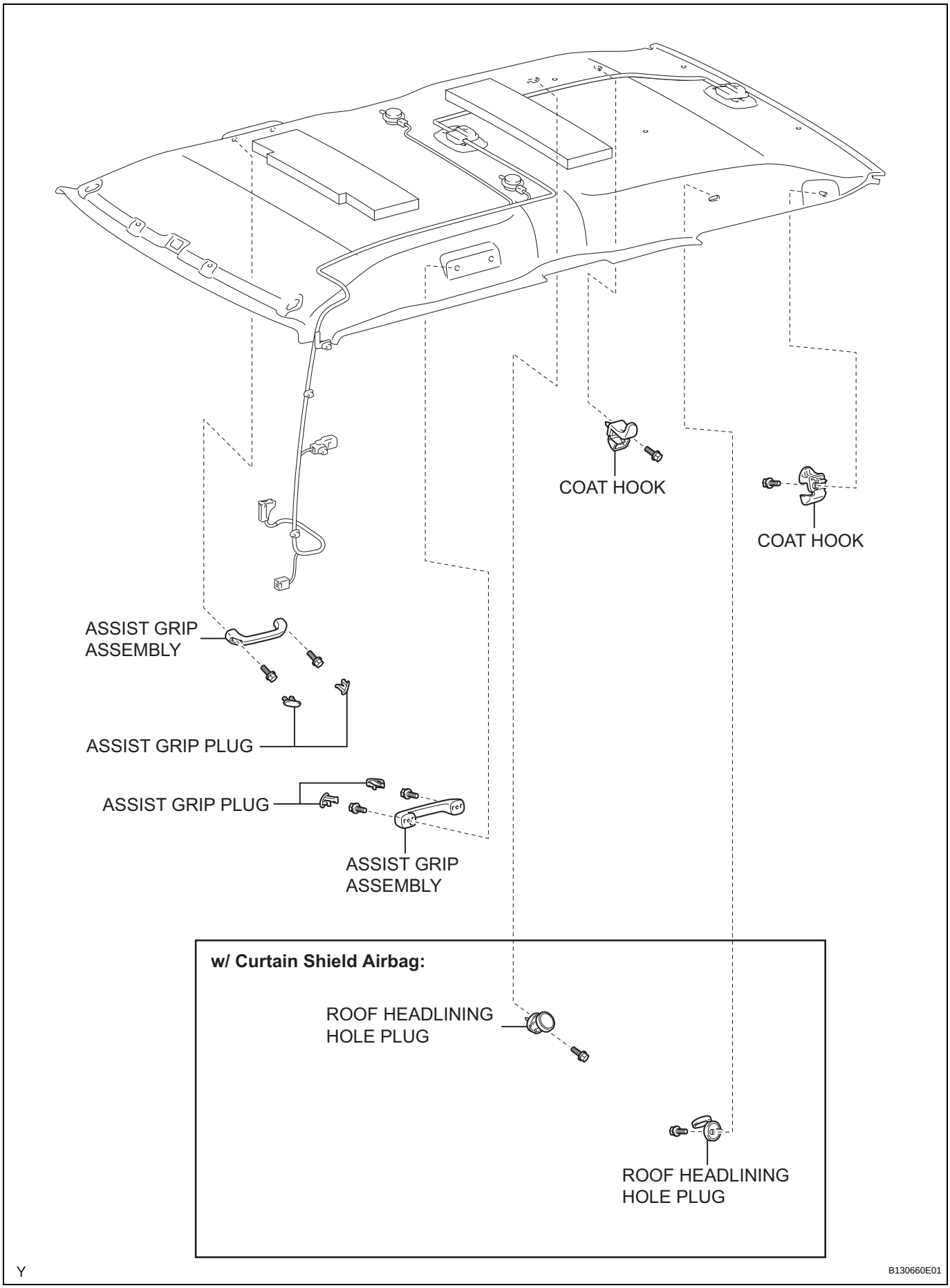
COAT HOOK
COAT HOOK
ASSIST GRIP ASSEMBLY
ASSIST GRIP PLUG
ASSIST GRIP PLUG
ASSIST GRIP ASSEMBLY
w/ Curtain Shield Airbag:
ROOF HEADLINING HOLE PLUG
ROOF HEADLINING HOLE PLUG
Y
B130660E01

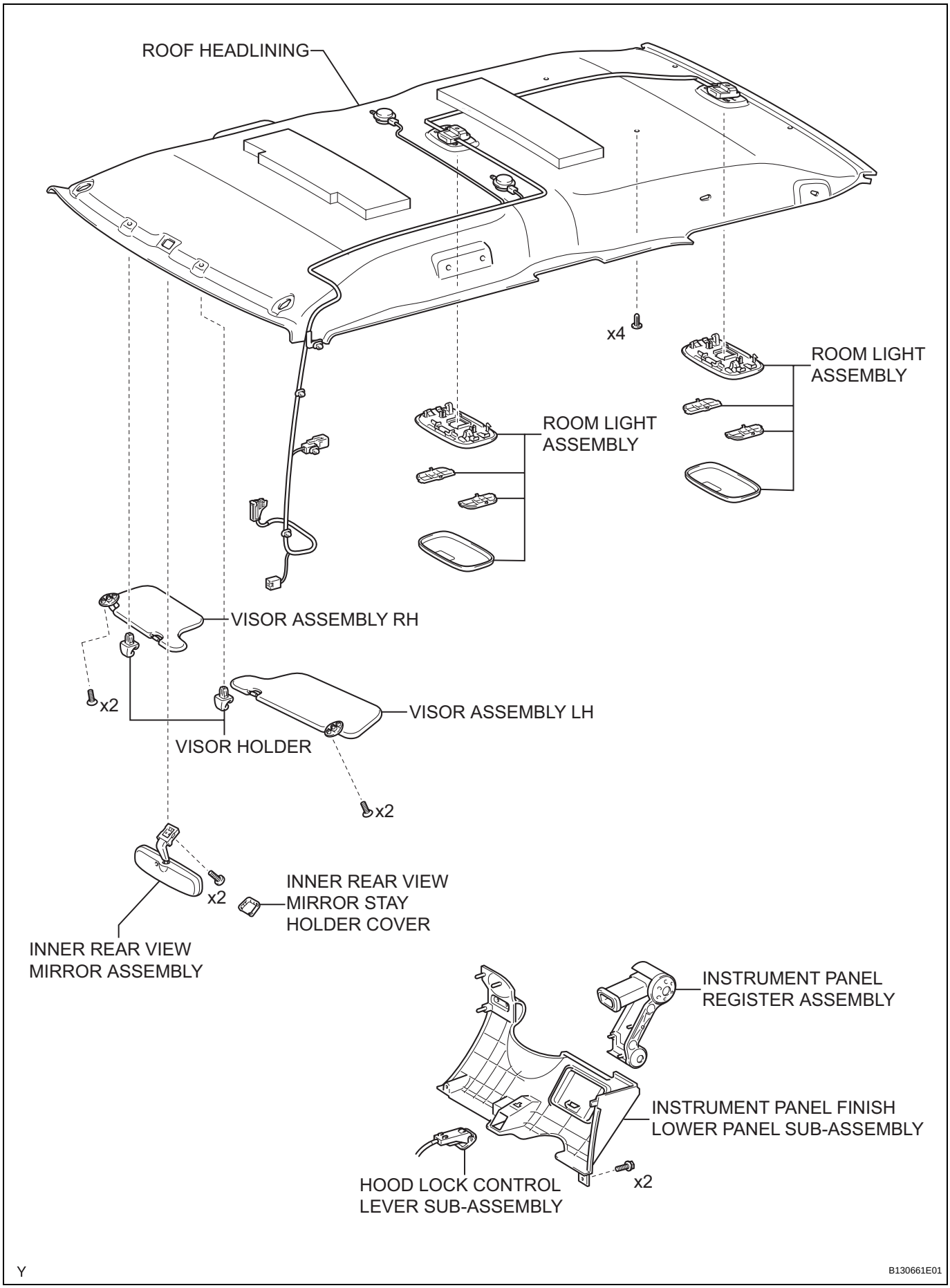
ROOF HEADLINING
x4
ROOM LIGHT ASSEMBLY
ROOM LIGHT ASSEMBLY
VISOR ASSEMBLY RH
x2
VISOR ASSEMBLY LH
VISOR HOLDER
x2
x2
INNER REAR VIEW MIRROR STAY HOLDER COVER
INNER REAR VIEW MIRROR ASSEMBLY
INSTRUMENT PANEL REGISTER ASSEMBLY
INSTRUMENT PANEL FINISH LOWER PANEL SUB-ASSEMBLY
x2
HOOD LOCK CONTROL LEVER SUB-ASSEMBLY
Y
B130661E01

IR

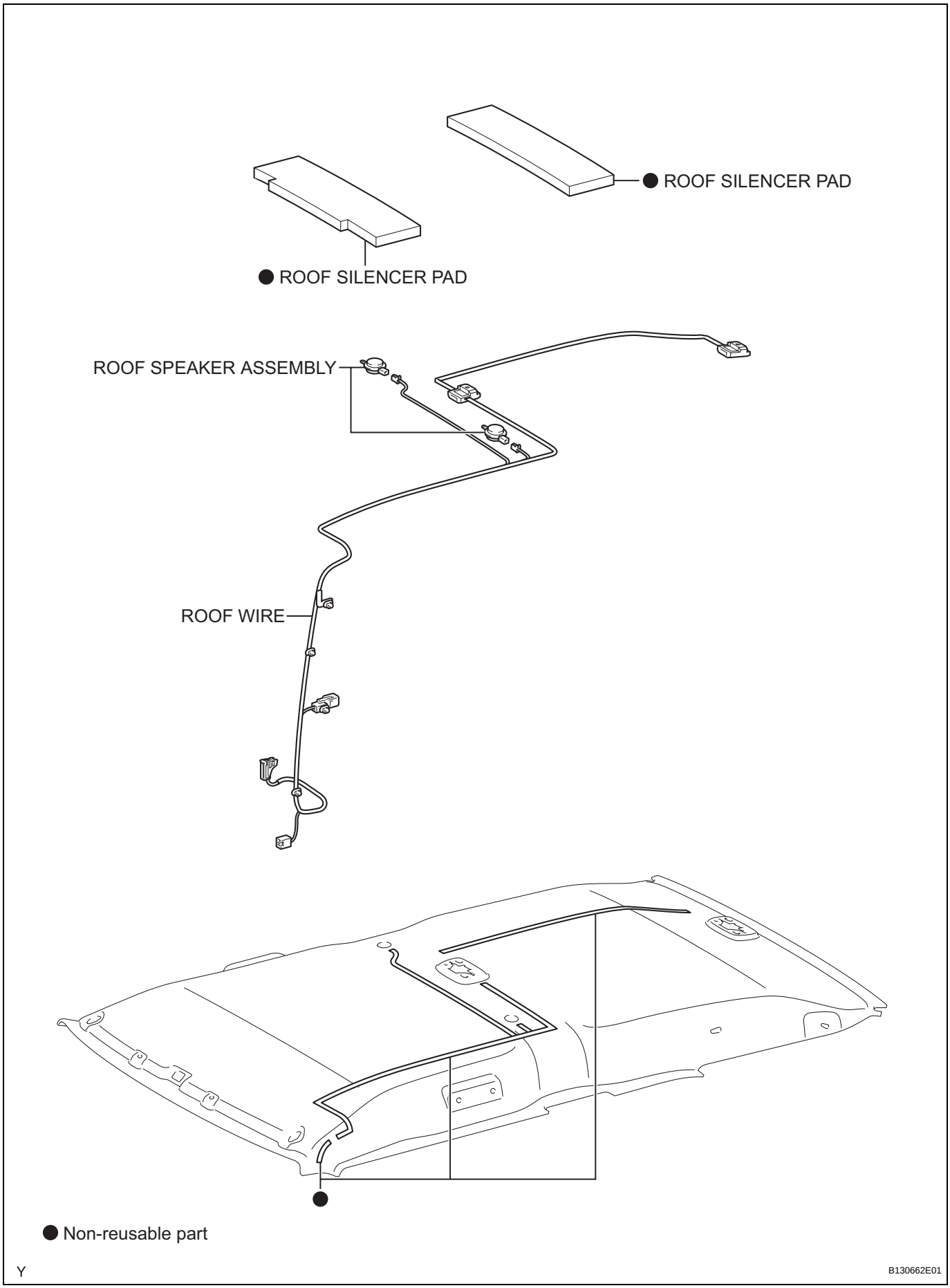
● ROOF SILENCER PAD
● ROOF SILENCER PAD
ROOF SPEAKER ASSEMBLY
ROOF WIRE
● Non-reusable part
Y
B130662E01

REMOVAL

1. **DISCONNECT CABLE FROM NEGATIVE BATTERY TERMINAL**
2. **REMOVE REAR SEATBACK BOARD CARPET ASSEMBLY RH (See page SE-43)**
3. **REMOVE REAR SEATBACK ASSEMBLY RH (See page SE-43)**
4. **REMOVE REAR SEATBACK BOARD CARPET ASSEMBLY LH (See page SE-29)**
5. **REMOVE REAR SEATBACK ASSEMBLY LH (See page SE-29)**
6. **REMOVE REAR FLOOR BOARD**
   (a) Remove the bolt and the luggage hold belt striker.
   HINT:
   Use the same procedure for both sides.

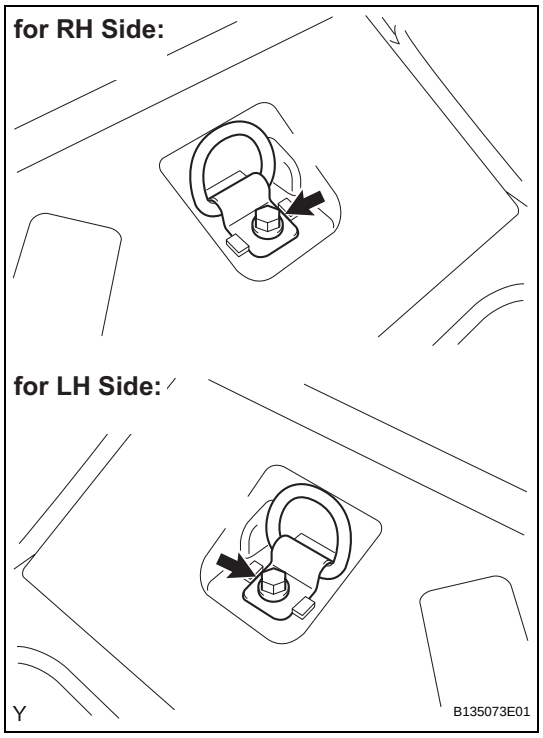

(b) Disengage the clip and the claw and remove the rear floor board.

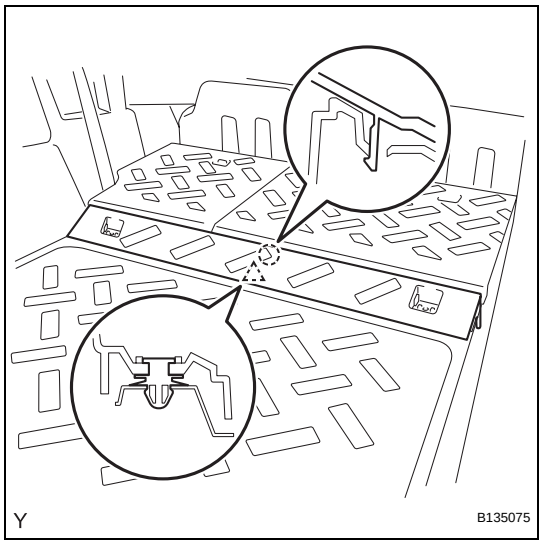

IR

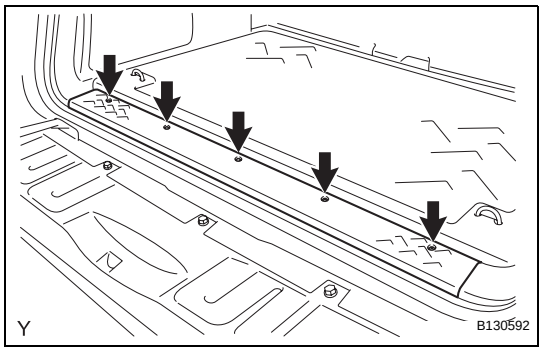

7. REMOVE REAR FLOOR MAT SUPPORT PLATE

(a) Remove the 5 screws.

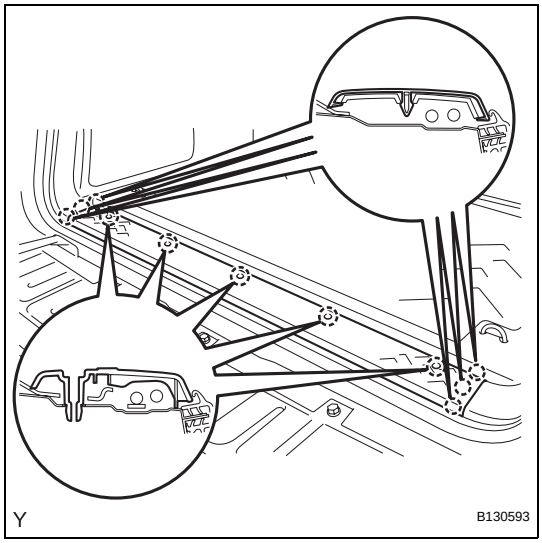

(b) Disengage the 11 claws and remove the rear floor mat support plate.

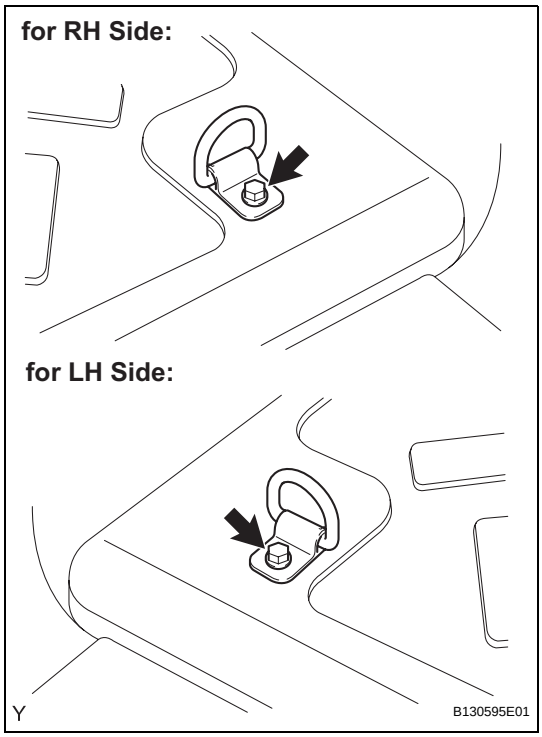

8. REMOVE LUGGAGE HOLD BELT STRIKER ASSEMBLY

HINT:

Use the same procedure for both sides.

(a) Remove the bolt and the luggage hold belt striker.

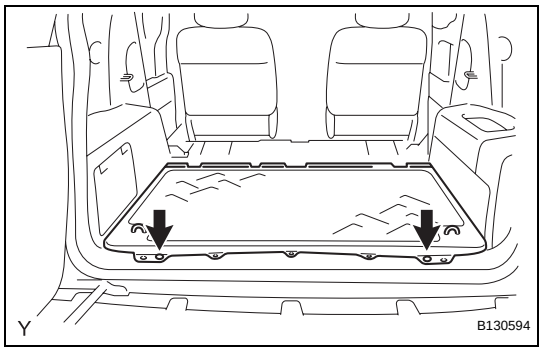

9. REMOVE REAR FLOOR MAT ASSEMBLY

(a) Using a clip remover, remove the 2 clips and the rear floor mat.

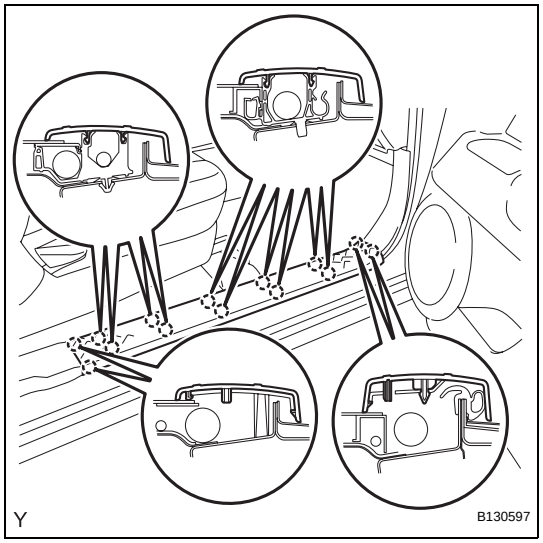

10. REMOVE FRONT DOOR SCUFF PLATE RH

(a) Disengage the 14 claws and remove the front door scuff plate.

11. REMOVE FRONT DOOR SCUFF PLATE LH

HINT:

Use the same procedure as for the RH side.

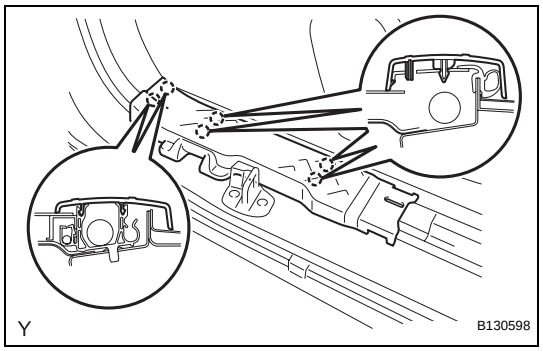

12. REMOVE ACCESS DOOR SCUFF PLATE RH

(a) Disengage the 6 claws and remove the access door scuff plate.

13. REMOVE ACCESS DOOR SCUFF PLATE LH

HINT:

Use the same procedure as for the RH side.

14. REMOVE FRONT FLOOR FOOTREST (See page IR-2)

15. REMOVE FOOTREST CLIP (See page IR-2)

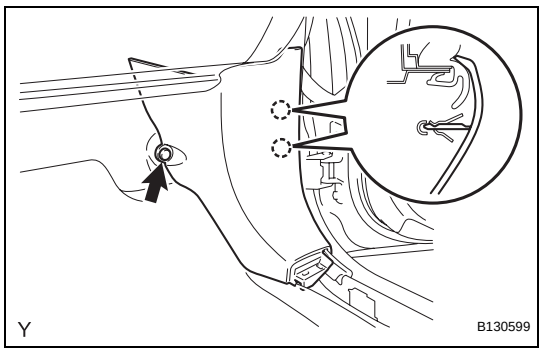

16. REMOVE COWL SIDE TRIM BOARD RH

(a) Remove the clip.

(b) Disengage the 2 claws and remove the cowl side trim board.

17. REMOVE COWL SIDE TRIM BOARD LH

HINT:

Use the same procedure as for the RH side.

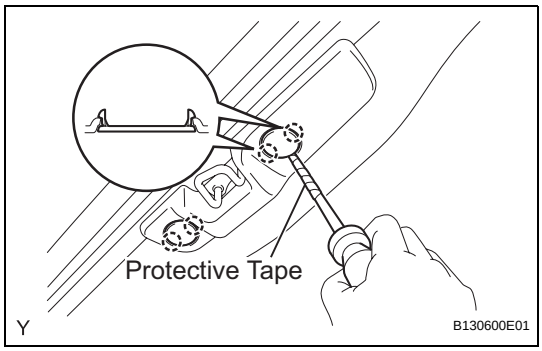

18. REMOVE ROOF SIDE INNER GARNISH COVER RH

HINT:

Use the same procedure for both sides.

(a) Using a screwdriver with its tip wrapped in protective tape, disengage the 2 claws and remove the roof side inner garnish cover.

19. REMOVE ROOF SIDE INNER GARNISH COVER LH

HINT:

Use the same procedure as for the RH side.

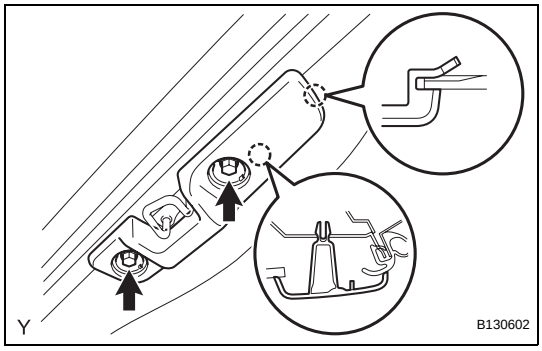

20. REMOVE ROOF SIDE RAIL GARNISH RH

(a) Remove the 2 bolts.

(b) Disengage the 2 claws and remove the roof side rail garnish.

21. REMOVE ROOF SIDE RAIL GARNISH LH

HINT:

Use the same procedure as for the RH side.

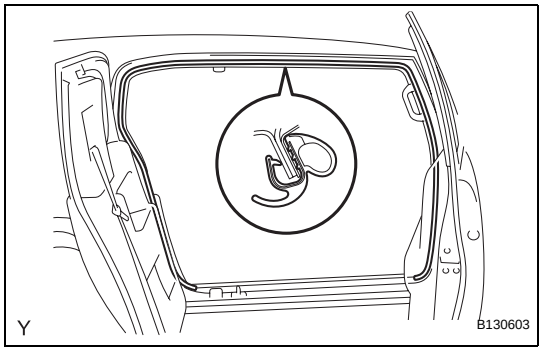

22. REMOVE FRONT DOOR OPENING TRIM WEATHERSTRIP RH

(a) Remove the front door opening trim weatherstrip.

23. REMOVE FRONT DOOR OPENING TRIM WEATHERSTRIP LH

HINT:

Use the same procedure as for the RH side.

for RH Side:

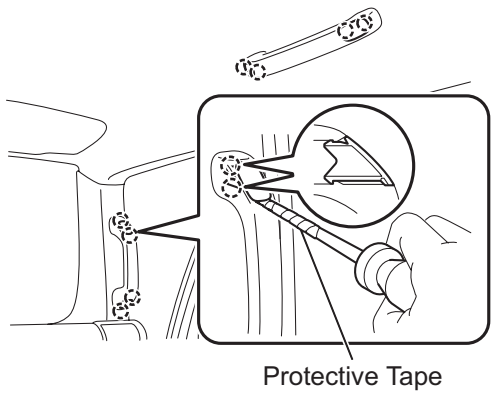

for LH Side:

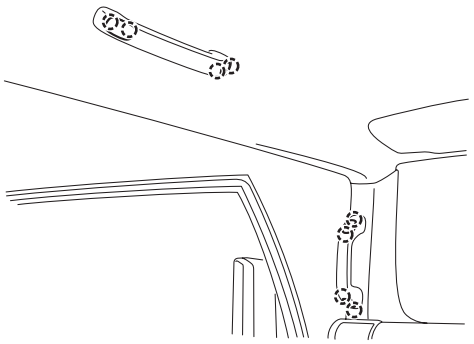

Y B134994E01

24. REMOVE ASSIST GRIP PLUG

HINT:

Use the same procedure to remove all the assist grip plugs.

(a) Using a screwdriver with its tip wrapped in protective tape, disengage the 2 claws and remove the assist grip plug.

for RH Side:

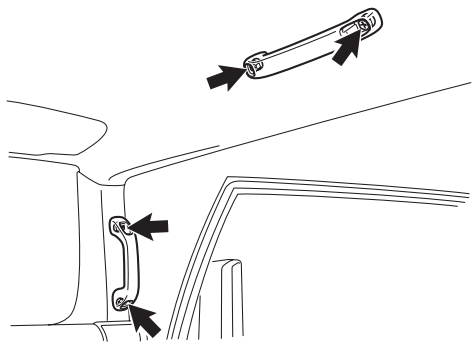

for LH Side:

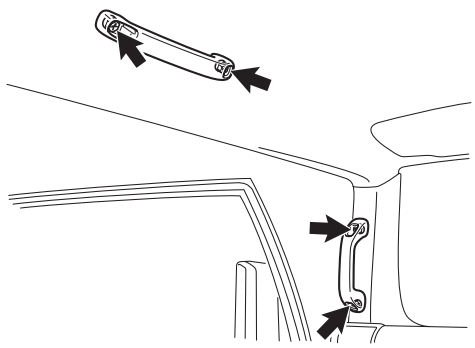

Y B134995E01

25. REMOVE ASSIST GRIP ASSEMBLY

HINT:

Use the same procedure to remove all the assist grips.

(a) Remove the 2 screws and the assist grip.

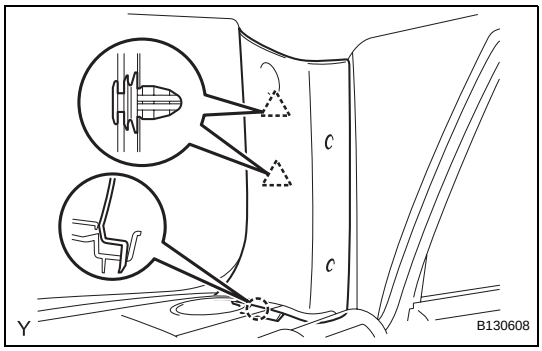

26. REMOVE FRONT PILLAR GARNISH RH

(a) Disengage the 2 clips and the claw and remove the front pillar garnish.

27. REMOVE FRONT PILLAR GARNISH LH

HINT:

Use the same procedure as for the RH side.

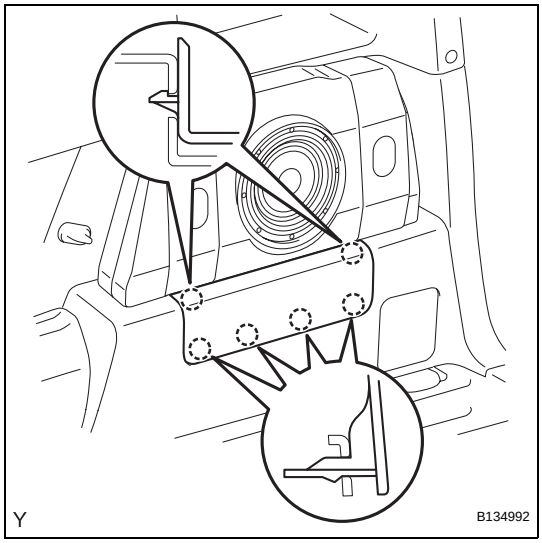

28. REMOVE DECK SIDE GARNISH (w/ Woofer)

(a) Disengage the 6 claws and remove the rear deck side garnish.

29. REMOVE SPEAKER MOUNTING COVER (w/ Woofer) (See page AV-90)

30. REMOVE AMPLIFIER BOX SPEAKER ASSEMBLY (w/ Woofer) (See page AV-90)

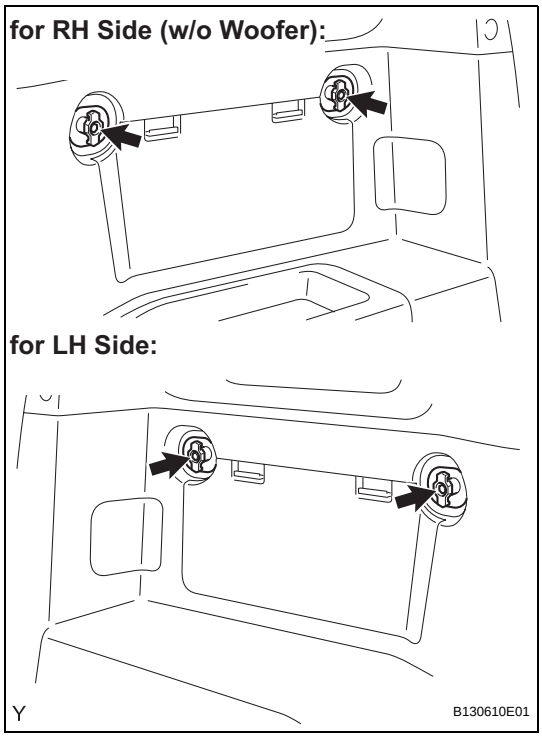

31. REMOVE PACKAGE HOLDER NET HOOK

HINT:

Use the same procedure to remove all the package holder net hooks.

(a) Remove the screw and the package holder net hook.

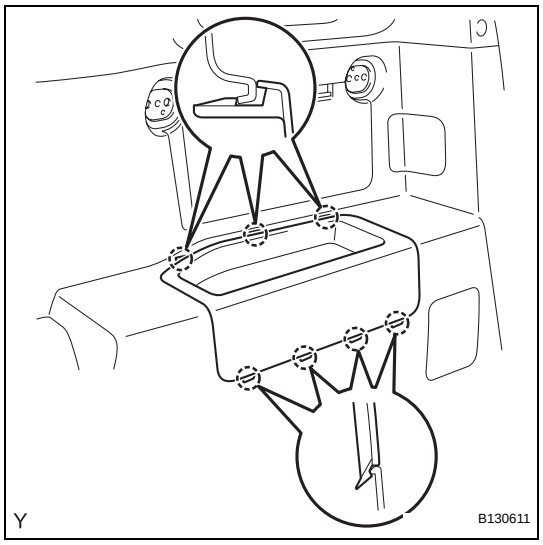

32. REMOVE QUARTER TRIM POCKET TRAY (w/o Woofer)

(a) Disengage the 7 claws and remove the quarter trim pocket tray.

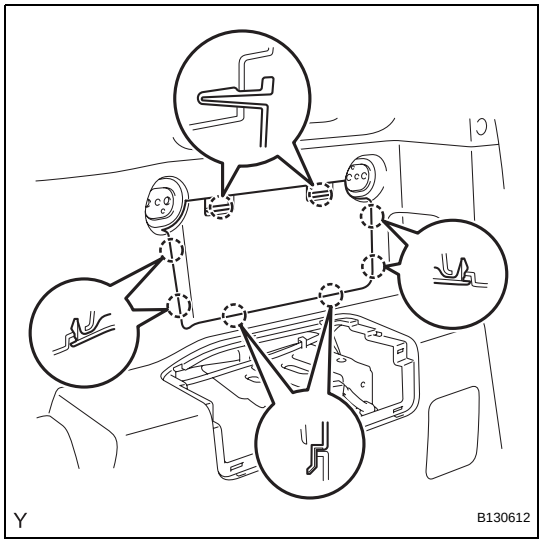

33. REMOVE SIDE TRIM COVER (w/o Woofer)

(a) Disengage the 8 claws and remove the side trim cover.

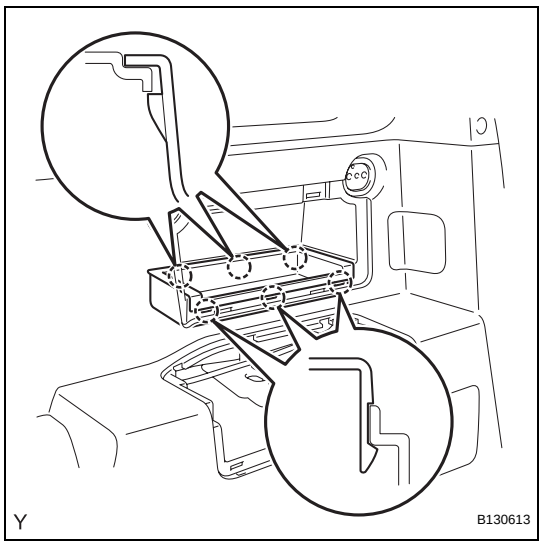

34. REMOVE QUARTER TRIM POCKET (w/o Woofer)

(a) Disengage the 6 claws and remove the quarter trim pocket.

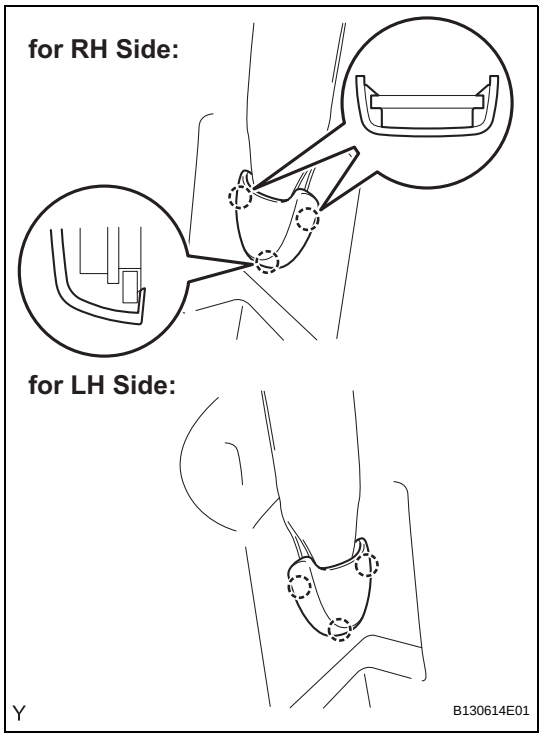

35. REMOVE LAP BELT OUTER ANCHOR COVER

HINT:

Use the same procedure for both sides.

(a) Disengage the 3 claws and remove the lap belt outer anchor cover.

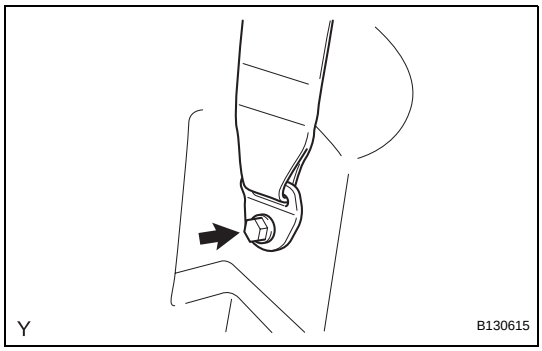

36. REMOVE REAR SEAT OUTER BELT ASSEMBLY RH

(a) Remove the bolt and the anchor plate.

37. REMOVE REAR SEAT OUTER BELT ASSEMBLY LH

HINT:

Use the same procedure as for the RH side.

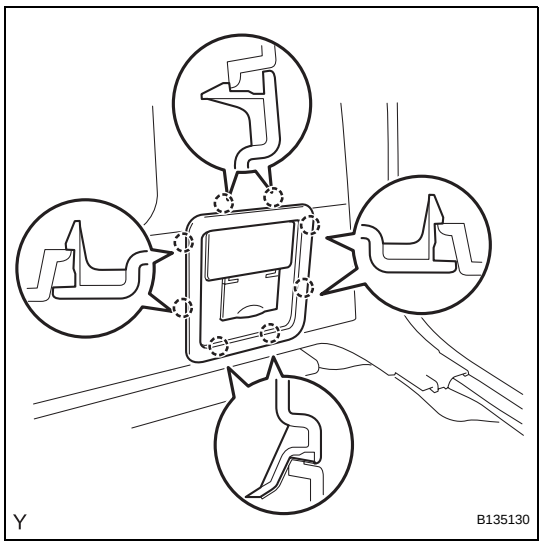

38. REMOVE REAR DECK TRIM COVER (w/ Power Outlet Socket)

(a) Disengage the 8 claws and remove the rear deck trim cover.

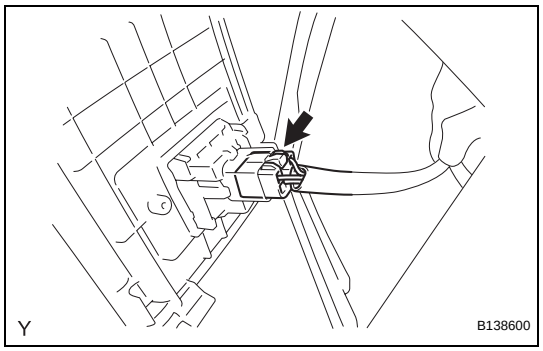

(b) Disconnect the power outlet connector.

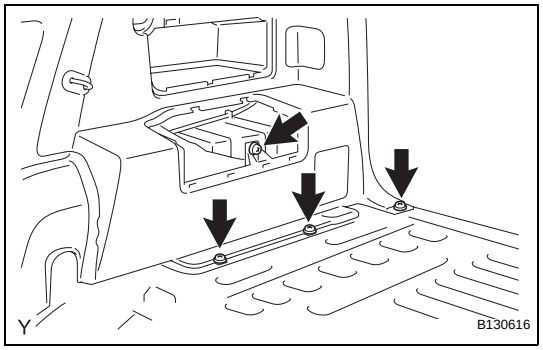

39. REMOVE DECK TRIM SIDE PANEL ASSEMBLY RH

(a) Remove the 4 screws.

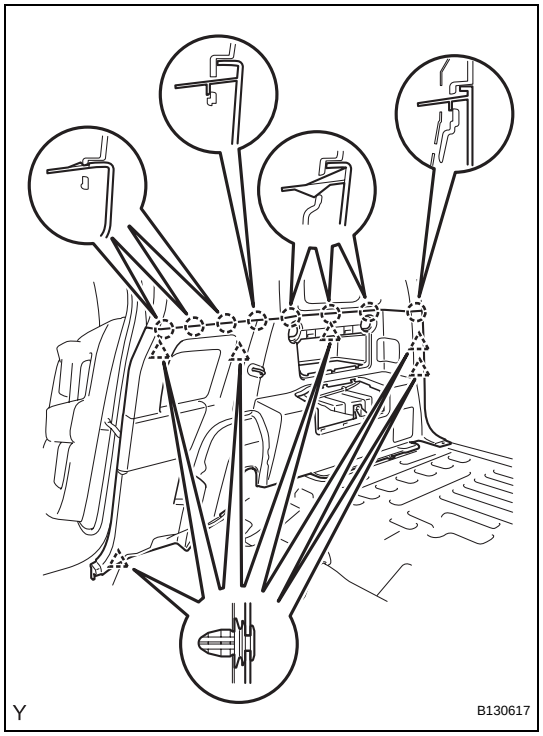

(b) Disengage the 6 clips and the 8 claws and remove the deck trim side panel.

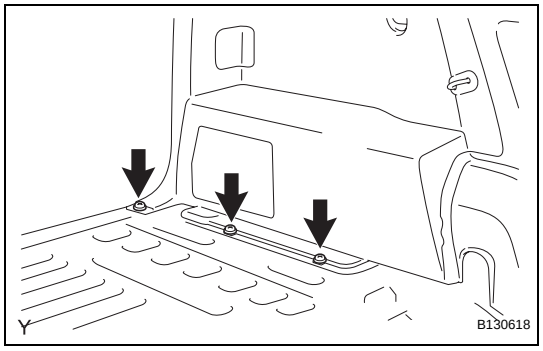

40. REMOVE DECK TRIM SIDE PANEL ASSEMBLY LH

(a) Remove the 3 screws.

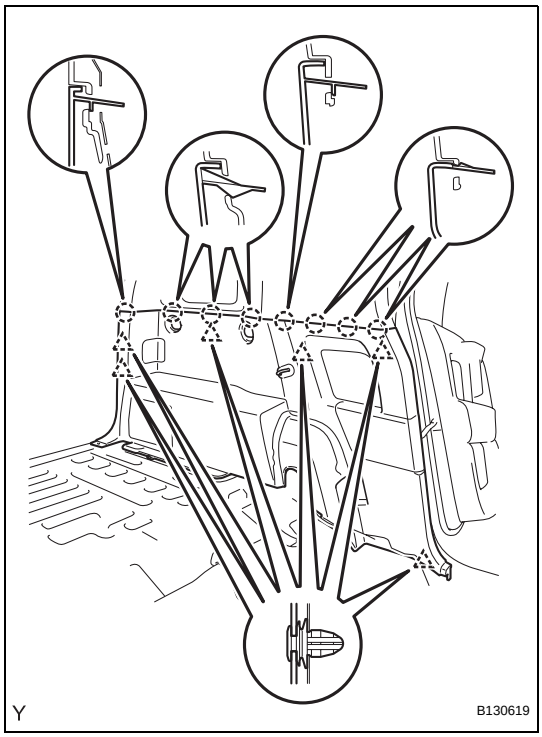

(b) Disengage the 6 clips and the 8 claws and remove the deck trim side panel.

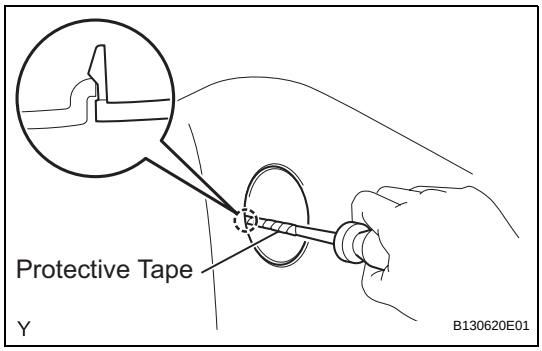

41. REMOVE ROOF SIDE INNER GARNISH RH

(a) Using a screwdriver with its tip wrapped in protective tape, disengage the claw and open the cover.

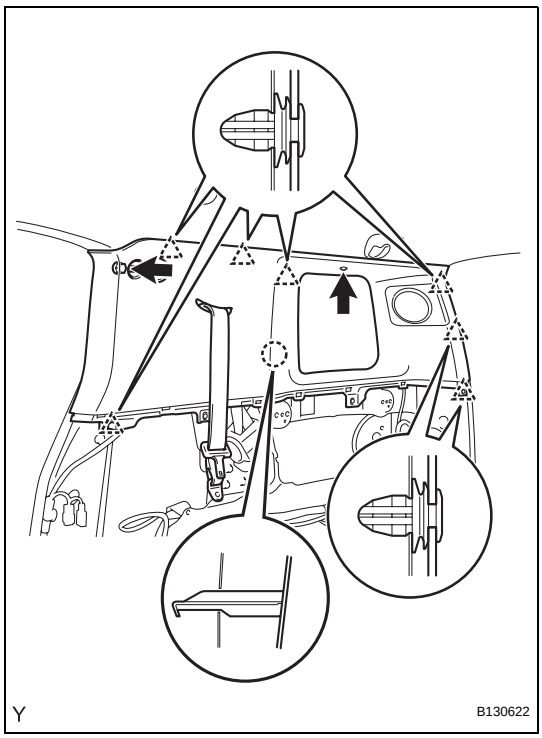

(b) Remove the bolt and the clip.
(c) Disengage the 7 clips and the claw and remove the roof side inner garnish.
(d) Pass the rear seat outer belt through the slit in the roof side inner garnish.

42. REMOVE ROOF SIDE INNER GARNISH LH

HINT:
Use the same procedure as for the RH side.

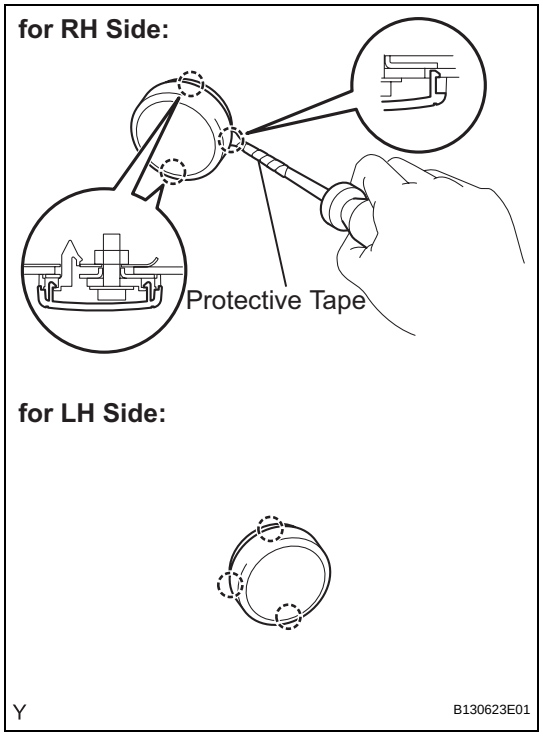

43. REMOVE ROOF HEADLINING HOLE PLUG

HINT:

Use the same procedure for both sides.

(a) Using a screwdriver with its tip wrapped in protective tape, disengage the 3 claws and open the cover.

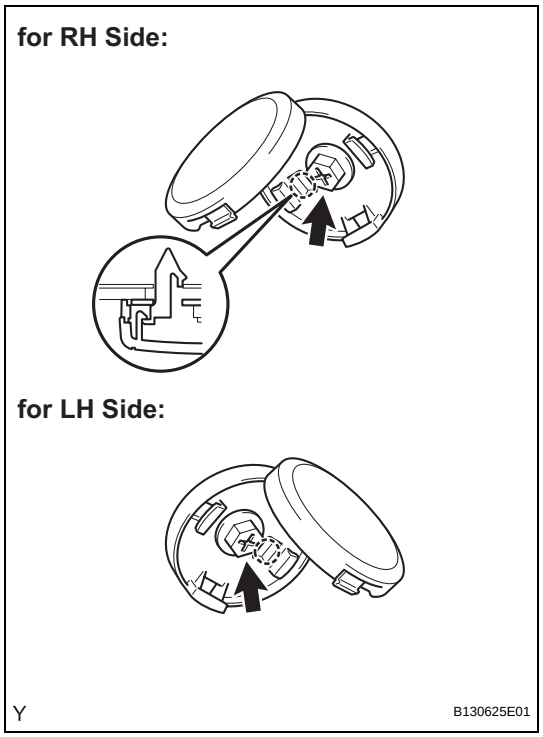

(b) Remove the bolt.

(c) Disengage the claw and remove the roof headlining hole plug.

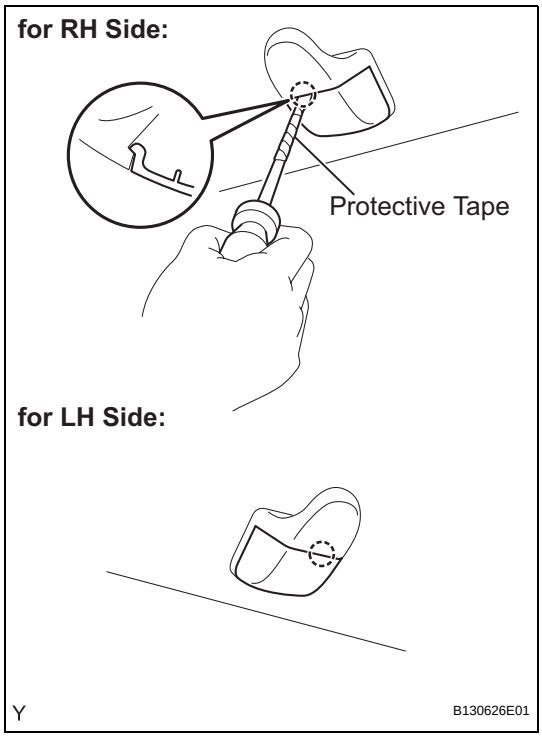

44. REMOVE COAT HOOK

HINT:

Use the same procedure for both sides.

(a) Using a screwdriver with its tip wrapped in protective tape, disengage the claw and open the cover.

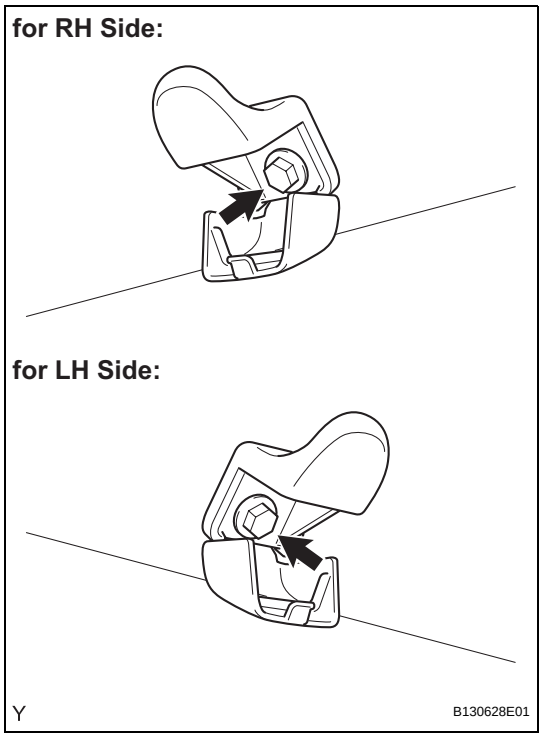

(b) Remove the bolt and the coat hook.

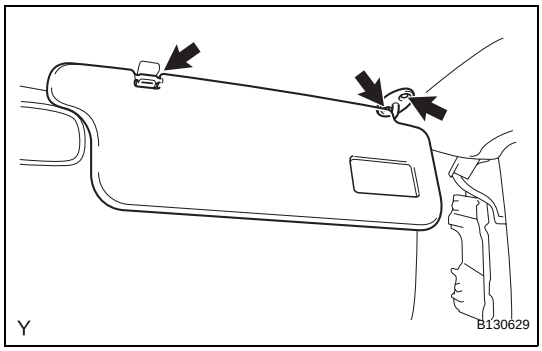

45. REMOVE VISOR ASSEMBLY RH

(a) Remove the visor support shaft from the visor holder.

(b) Remove the 2 screws and the visor.

46. REMOVE VISOR ASSEMBLY LH

HINT:

Use the same procedure as for the RH side.

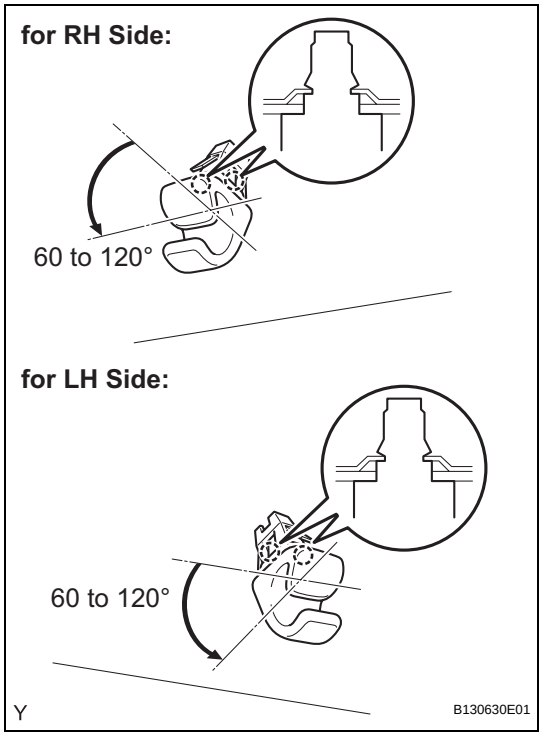

47. REMOVE VISOR HOLDER

HINT:

Use the same procedure for both sides.

(a) Disengage the 2 claws by turning the visor counterclockwise between 60 to 120° and remove the visor holder.

HINT:

The claw may be damaged during removal. However, it is reusable because this does not effect its function.

48. REMOVE INNER REAR VIEW MIRROR STAY HOLDER COVER (See page MI-6)

49. REMOVE INNER REAR VIEW MIRROR ASSEMBLY (See page MI-6)

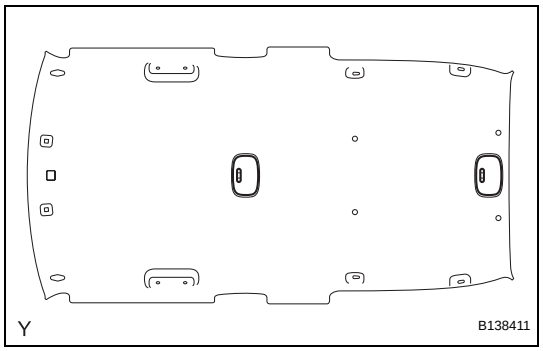

50. REMOVE ROOM LIGHT ASSEMBLY

HINT:

The procedure described below is for the front side. Use the same procedure for both the front and rear sides, unless otherwise specified.

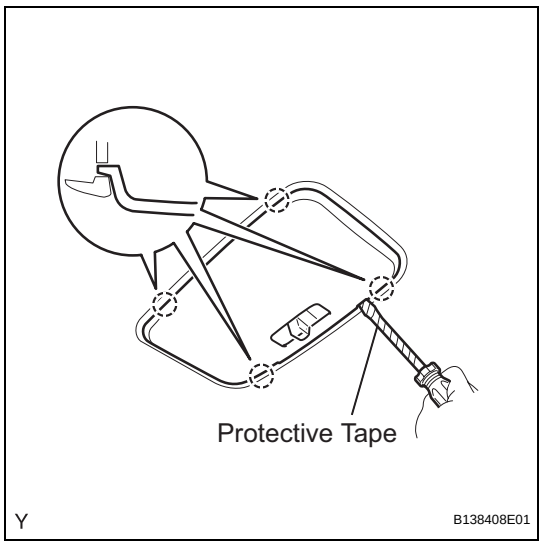

(a) Using a screwdriver with its tip wrapped in protective tape, disengage the 4 claws and remove the room light lens.

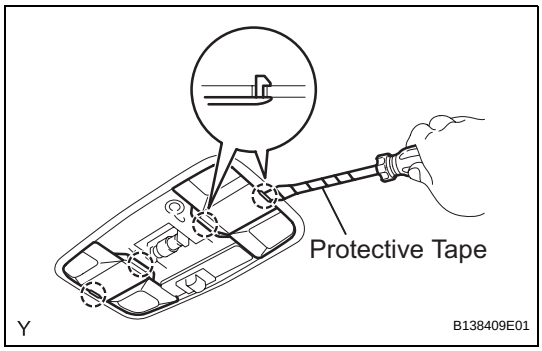

(b) Using a screwdriver with its tip wrapped in protective tape, disengage the 2 claws and remove the cover.
HINT:
Use the same procedure as for the opposite side.

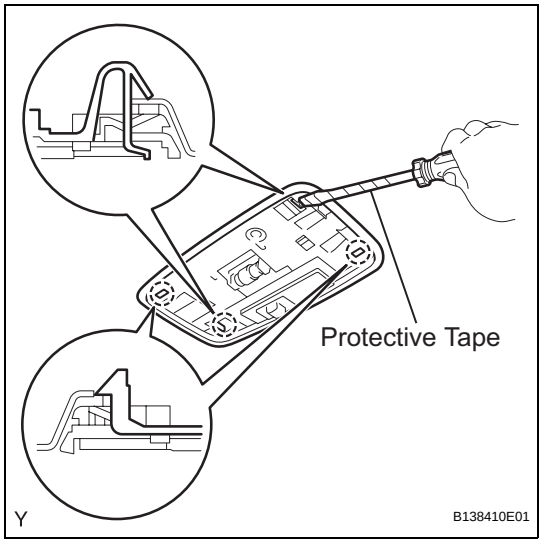

(c) Using a screwdriver with its tip wrapped in protective tape, disengage the 4 claws and remove the room light.

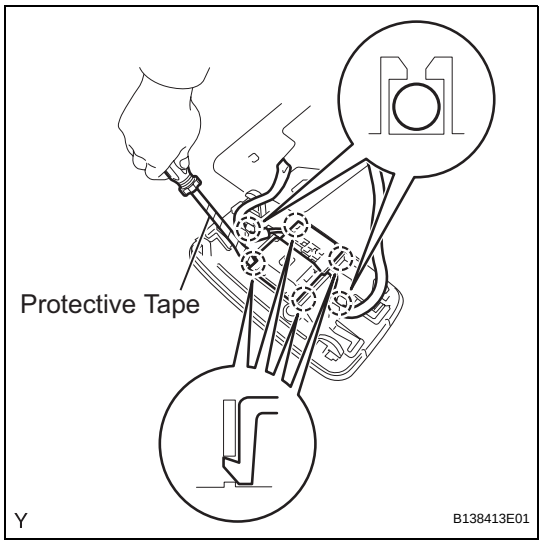

(d) for Front Side:
(1) Remove the 2 wire harnesses from the 2 claws of the room light.
(2) Using a screwdriver with its tip wrapped in protective tape, disengage the 4 claws and remove the room light switch base.

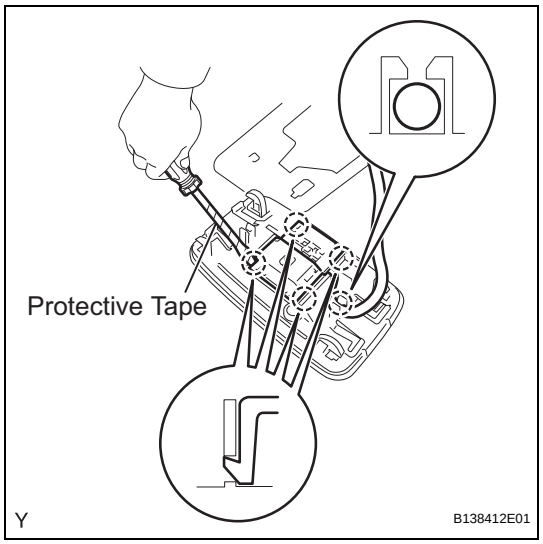

(e) for Rear Side:
  (1) Remove the wire harness from the claw of the room light.
  (2) Using a screwdriver with its tip wrapped in protective tape, disengage the 4 claws and remove the room light switch base.

51. REMOVE INSTRUMENT PANEL REGISTER ASSEMBLY (See page IP-13)

52. REMOVE HOOD LOCK CONTROL LEVER SUB-ASSEMBLY (See page IP-13)

53. REMOVE INSTRUMENT PANEL FINISH LOWER PANEL SUB-ASSEMBLY (See page IP-14)

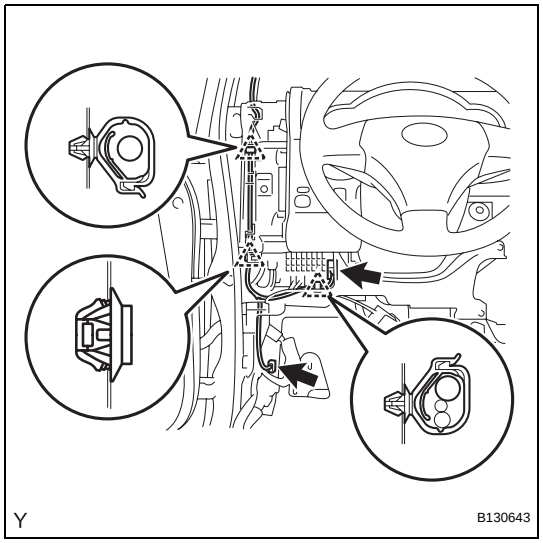

54. REMOVE ROOF HEADLINING
(a) Remove the wire harness from the 2 clamps.
(b) Disconnect the 2 connectors.
(c) Using a clip remover, remove the clamp.

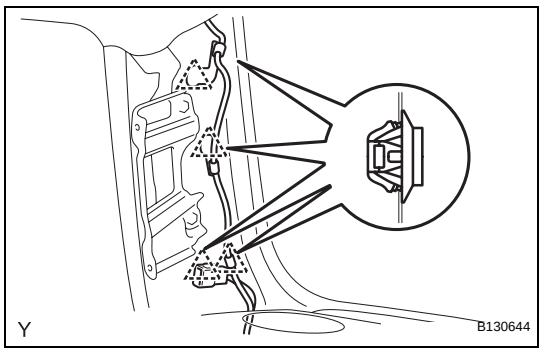

(d) Using a clip remover, remove the 3 clamps and the connector.

(e) Using a clip remover, remove the 4 clips.

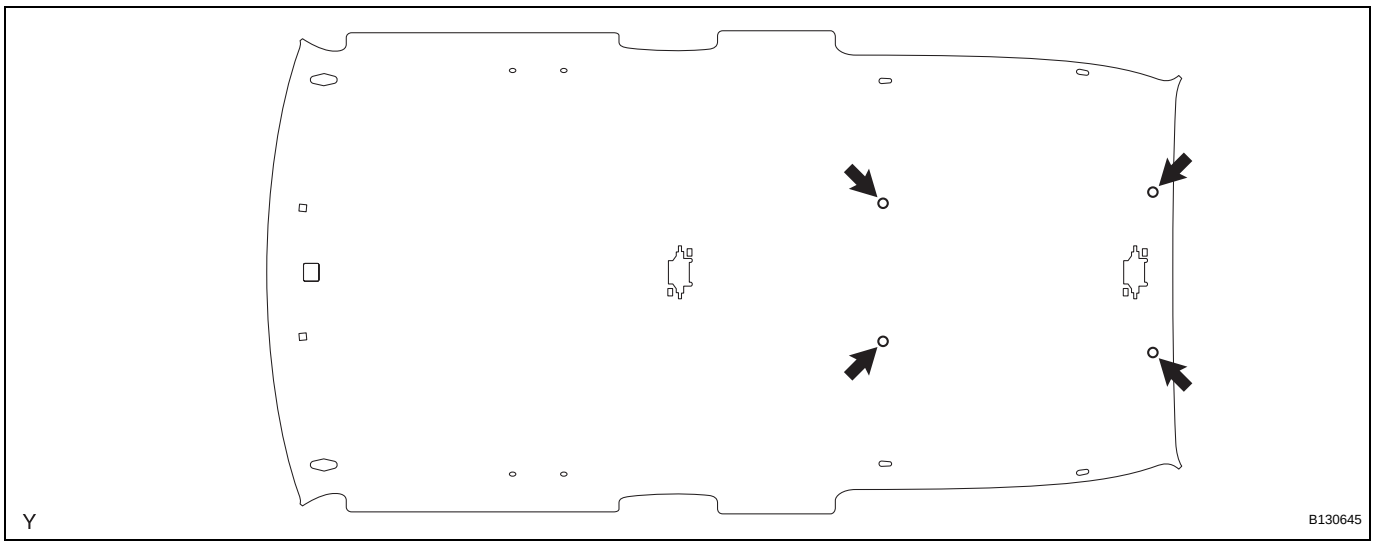

(f) Remove the roof headlining from the back door.

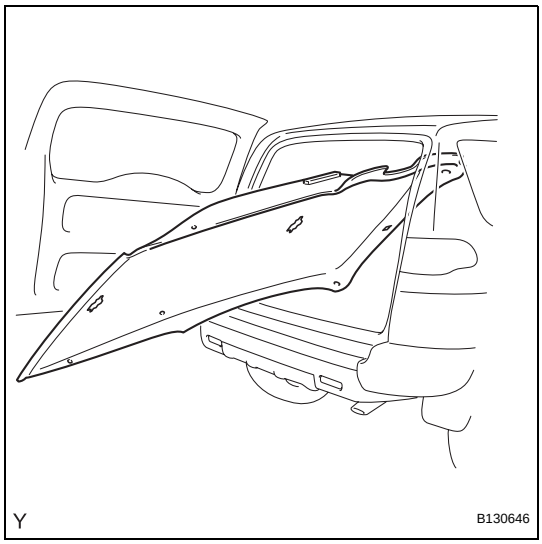

DISASSEMBLY

1. REMOVE ROOF SPEAKER ASSEMBLY

HINT:

Use the same procedure for both sides.

(a) Disconnect the speaker connector.

(b) Loosen the screw.

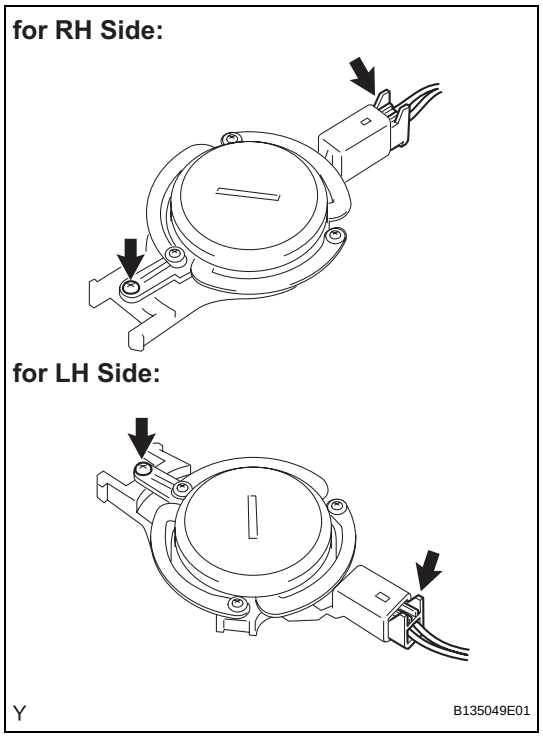

(c) Remove the roof speaker by turning it in the direction of the arrow shown in the illustration.

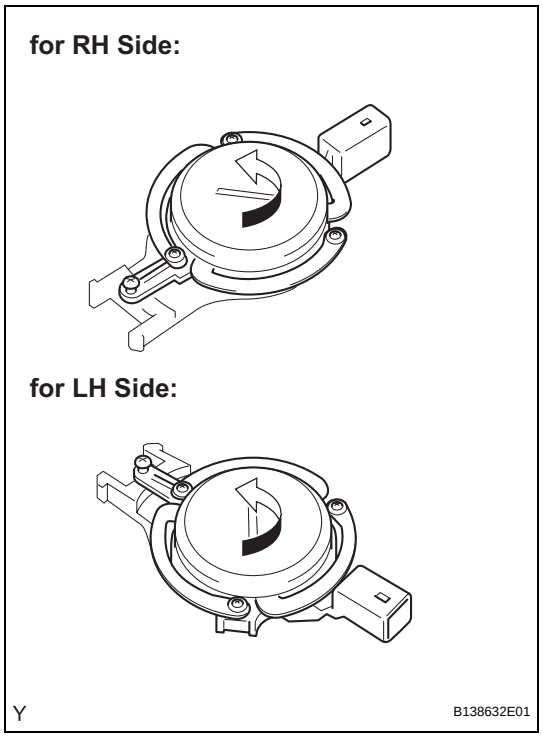

2. REMOVE ROOF SILENCER PAD

(a) Remove the 2 roof silencer pads.

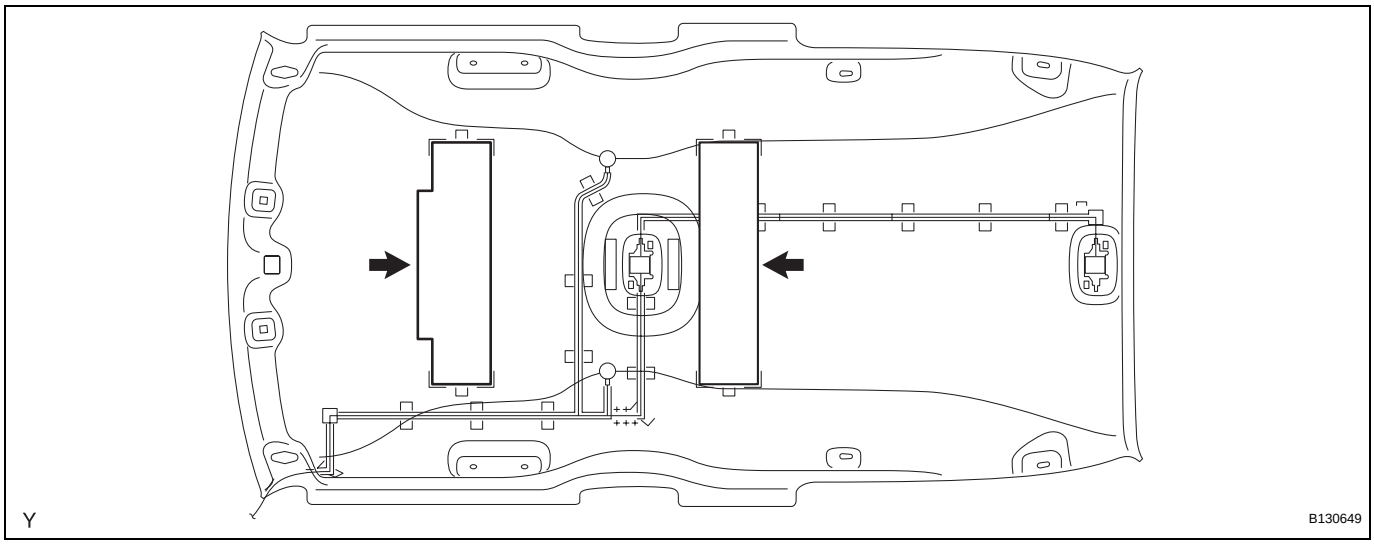

3. REMOVE ROOF WIRE

(a) Remove the roof wire.

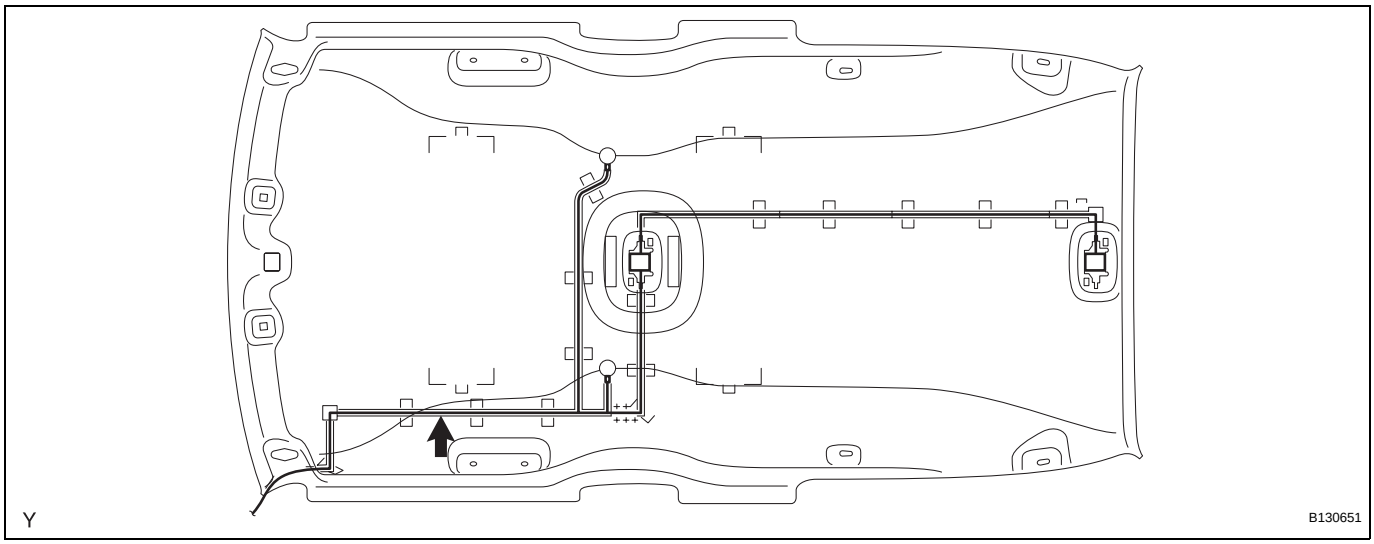

REASSEMBLY

1. INSTALL ROOF WIRE

(a) Apply new double-sided tape to the roof headlining along the markings of the roof headlining.

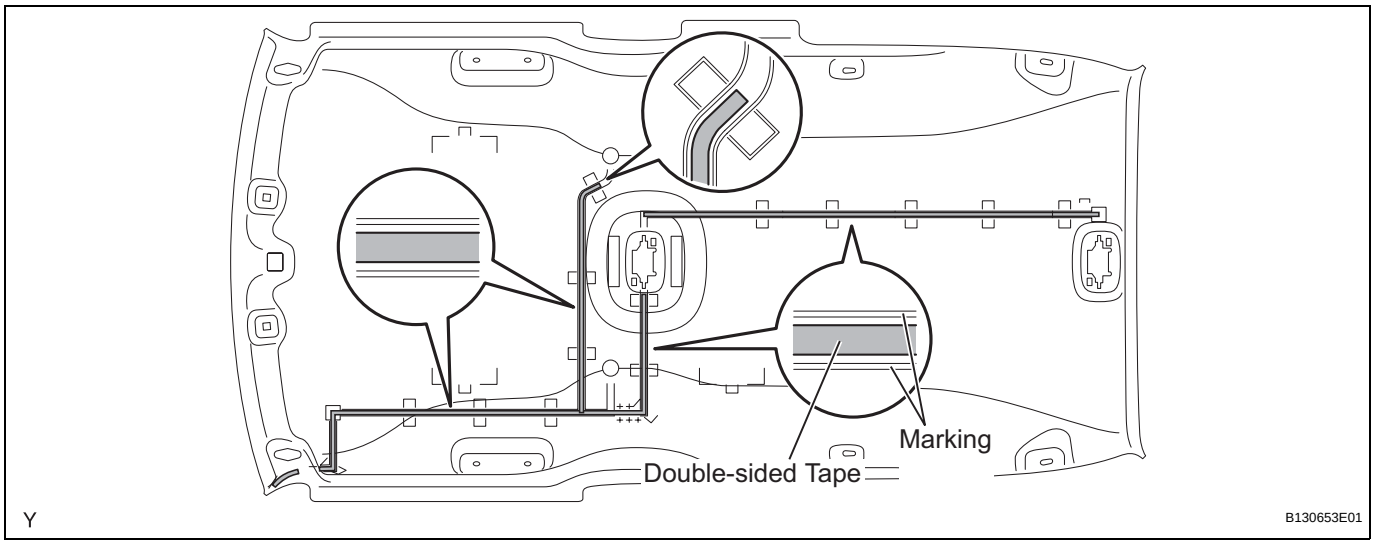

NOTICE:

- **Apply the tape securely in place.**
- **Do not touch the adhesive surface when applying the tape to prevent adhesion failure.**

(b) Install the roof wire as shown in the illustration.

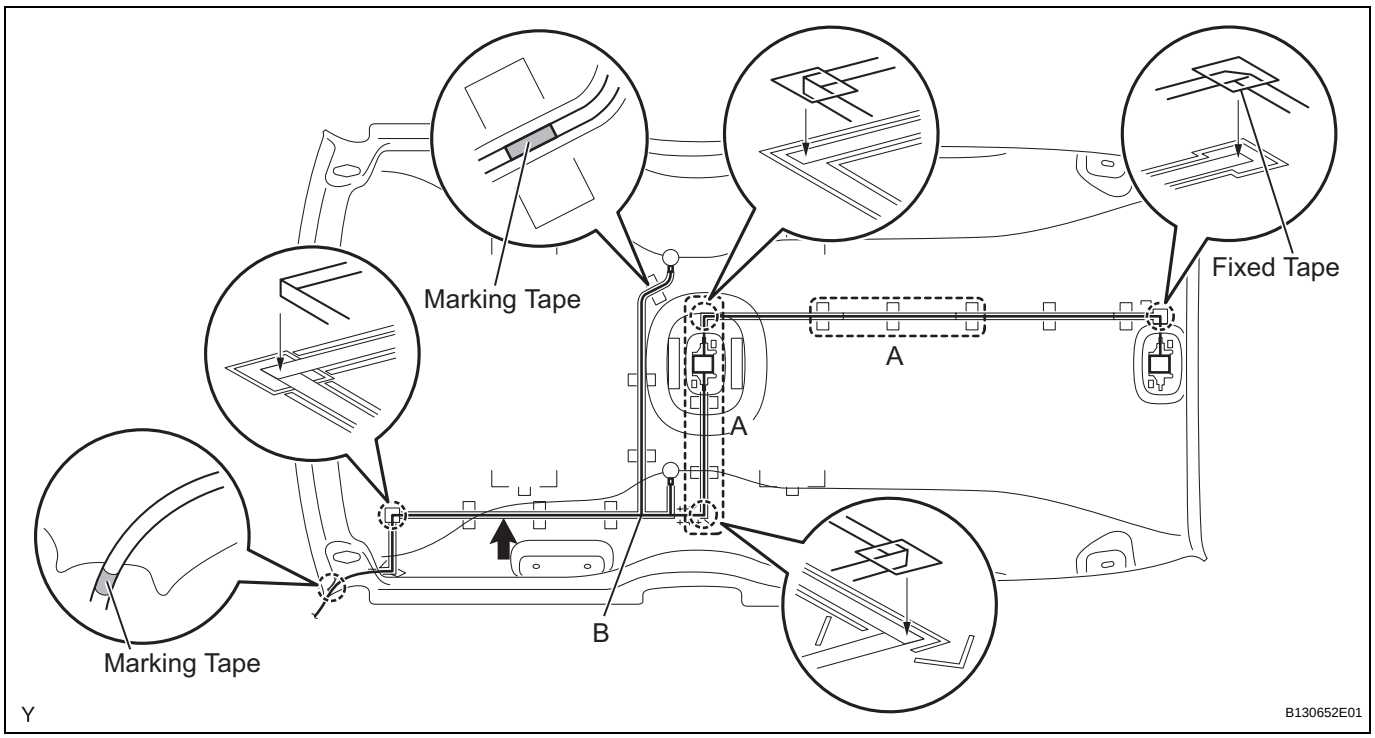

NOTICE:

- **Do not twist the flat wire harness when installing it.**
- **Securely fix the wire harness by pressing it.**

- **Securely fix the wire harness to secure gap between the wire harness and the roof panel in part A.**
- **Securely fix the wire harness to avoid looseness in the wire harness between portion B and the marking tape.**

2. INSTALL ROOF SILENCER PAD

(a) Align 2 new roof silencer pads with the markings of the roof headlining and install them onto the roof headlining.

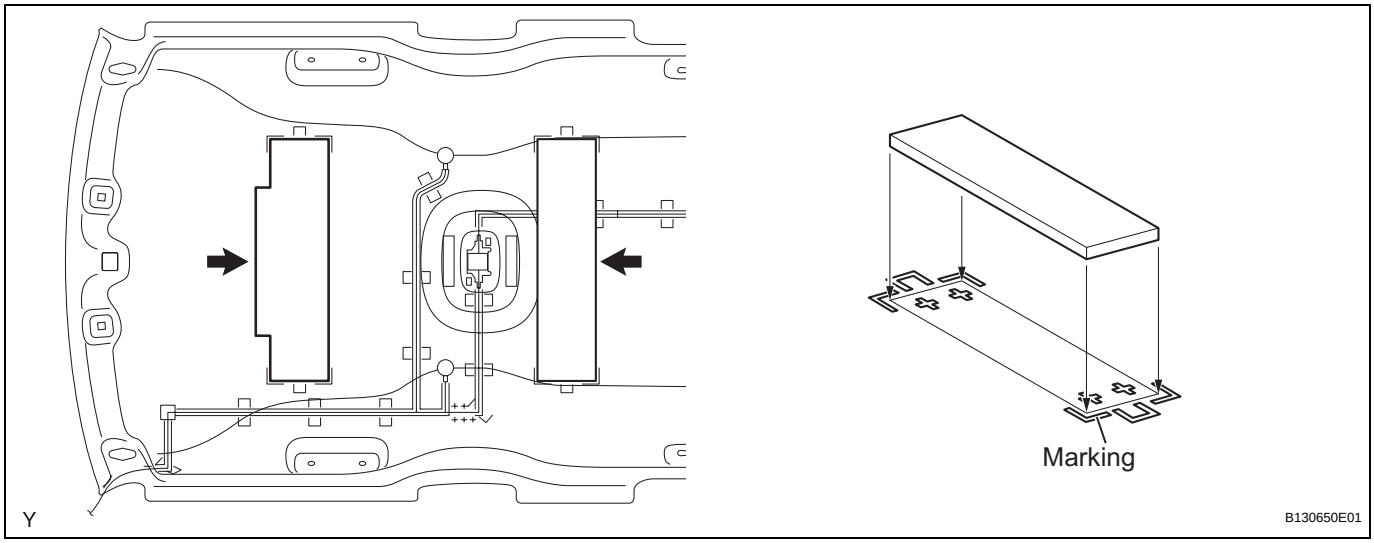

for RH Side:

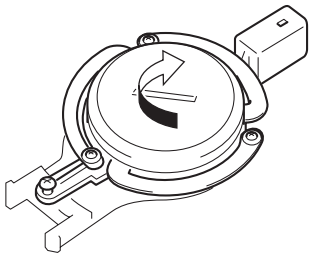

for LH Side:

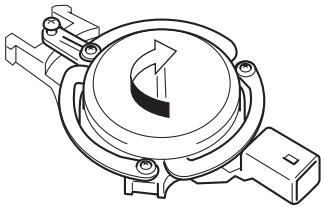

Y B138635E01

3. INSTALL ROOF SPEAKER ASSEMBLY

HINT:

Use the same procedure for both sides.

(a) Install the roof speaker by turning it in the direction of the arrow shown in the illustration.

for RH Side:

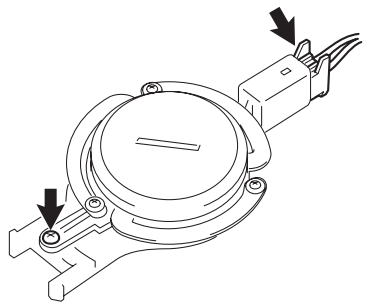

for LH Side:

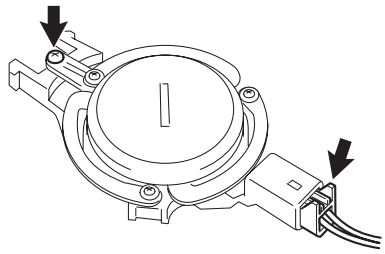

Y B135049E01

(b) Tighten the screw.
(c) Connect the speaker connector.

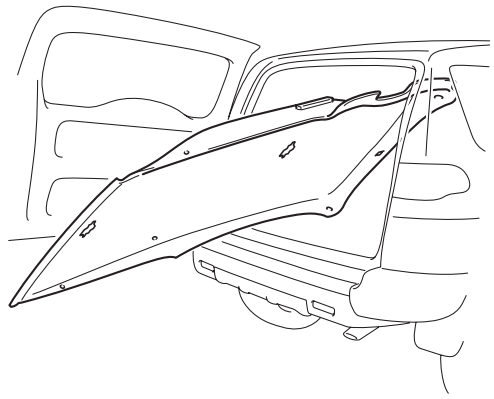

Y B130646

INSTALLATION

1. INSTALL ROOF HEADLINING

(a) Pull the roof headlining back into the vehicle through the back door.
(b) Install the 4 clips.

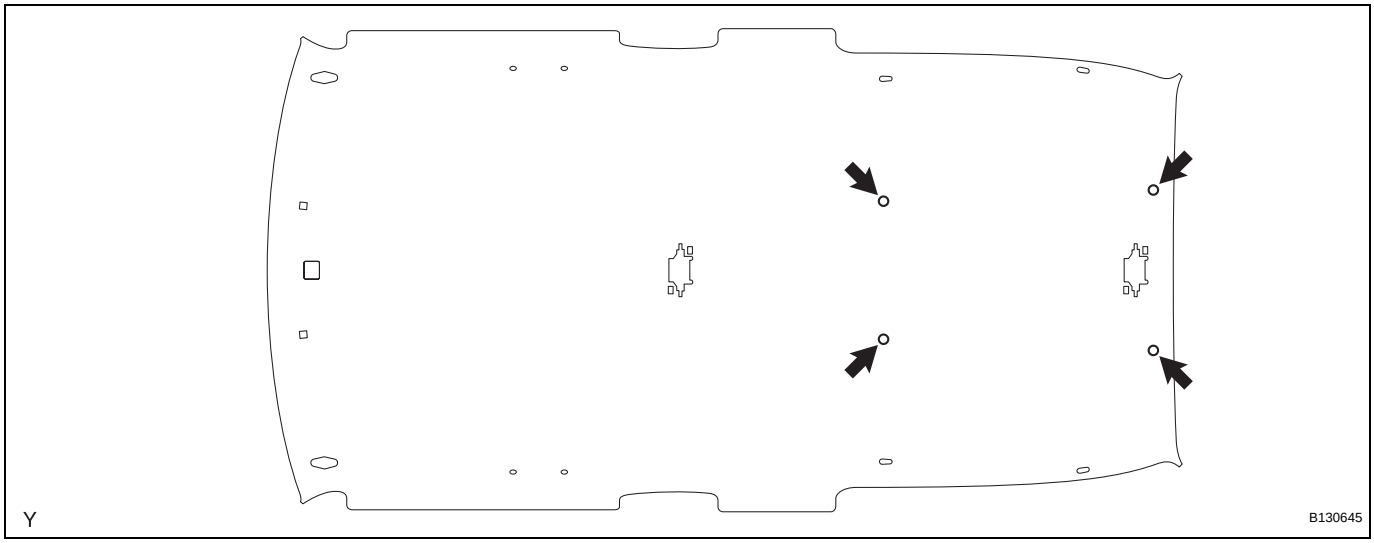

Y B130645

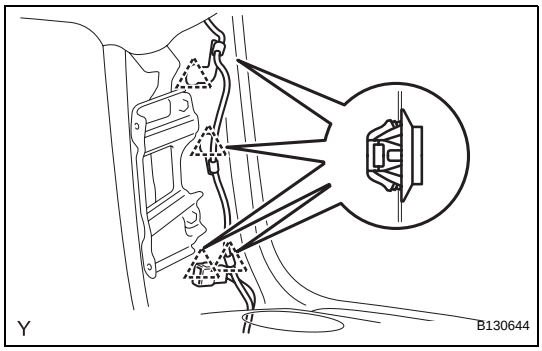

(c) Install the 3 clamps and the connector.

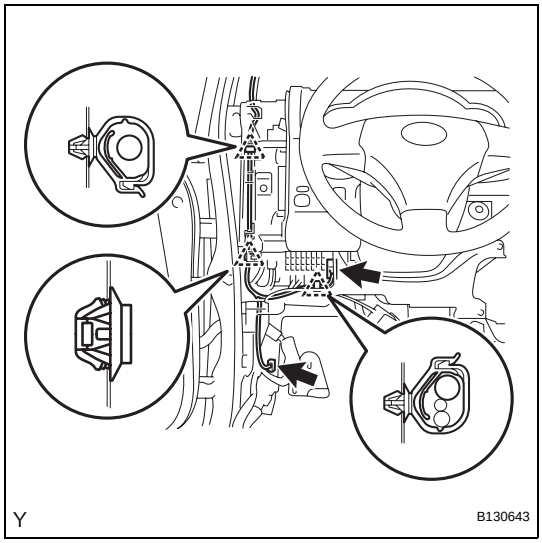

(d) Install the clamp.
(e) Connect the 2 connectors.
(f) Insert the wire harness into the 2 clamps.

2. INSTALL INSTRUMENT PANEL FINISH LOWER PANEL SUB-ASSEMBLY (See page IP-29)

3. INSTALL HOOD LOCK CONTROL LEVER SUB-ASSEMBLY (See page IP-30)

4. INSTALL INSTRUMENT PANEL REGISTER ASSEMBLY (See page IP-30)

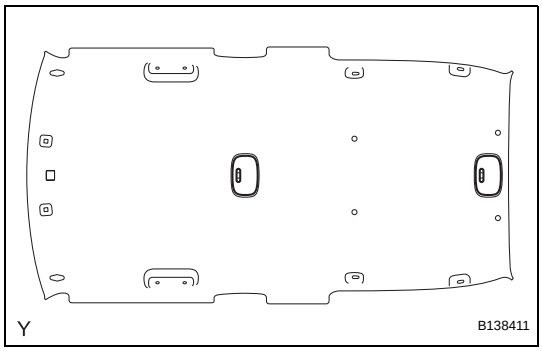

5. INSTALL ROOM LIGHT ASSEMBLY

HINT:
The procedure described below is for the front side. Use the same procedure for both the front and rear sides, unless otherwise specified.

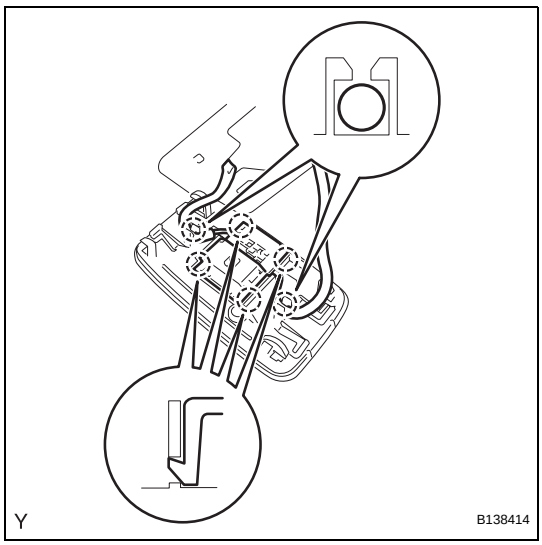

(a) for Front Side:
  (1) Engage the 4 claws and install the room light switch base.
  (2) Insert the 2 wire harnesses into the 2 claws of the room light.

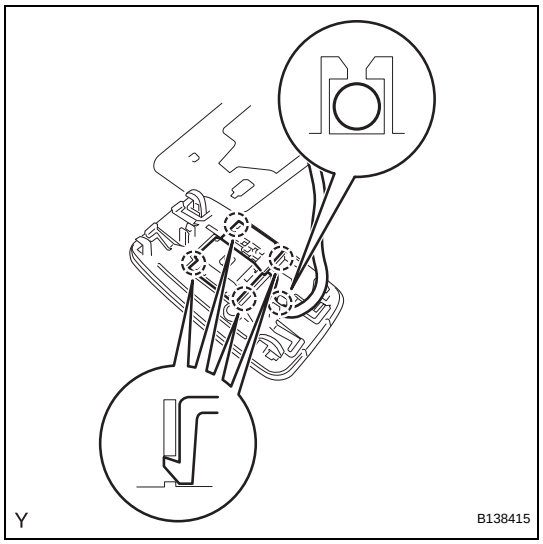

(b) for Rear Side:
  (1) Engage the 4 claws and install the room light switch base.
  (2) Insert the wire harness into the claw of the room light.

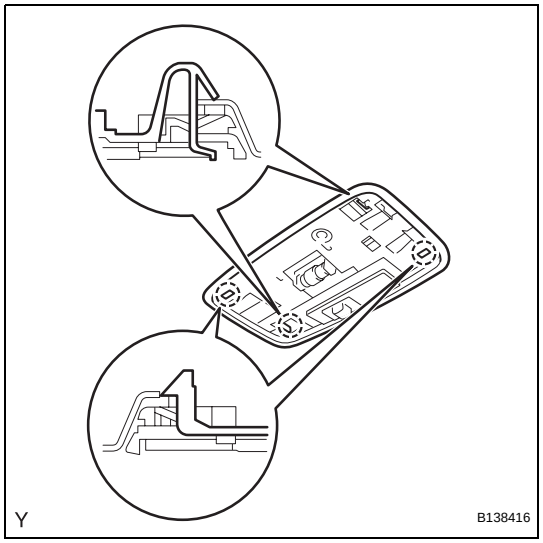

(c) Engage the 4 claws and install the room light.

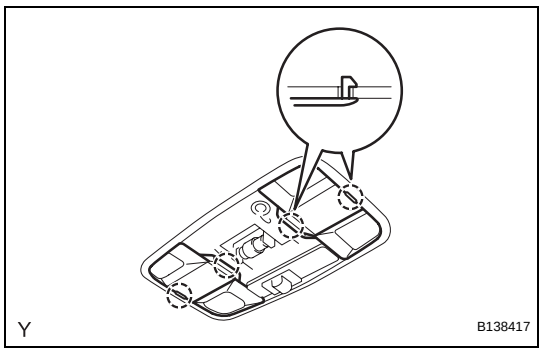

(d) Engage the 4 claws and install the 2 covers.

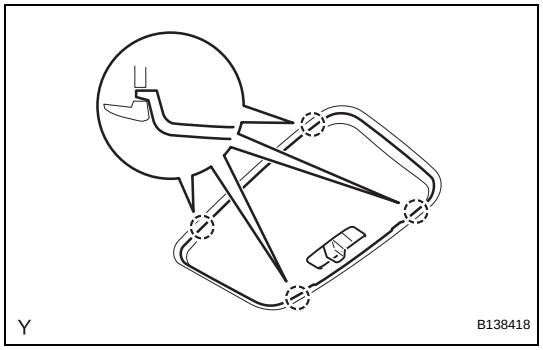

(e) Engage the 4 claws and install the room light lens.

6. **INSTALL INNER REAR VIEW MIRROR ASSEMBLY (See page MI-6)**

7. **INSTALL INNER REAR VIEW MIRROR STAY HOLDER COVER (See page MI-6)**

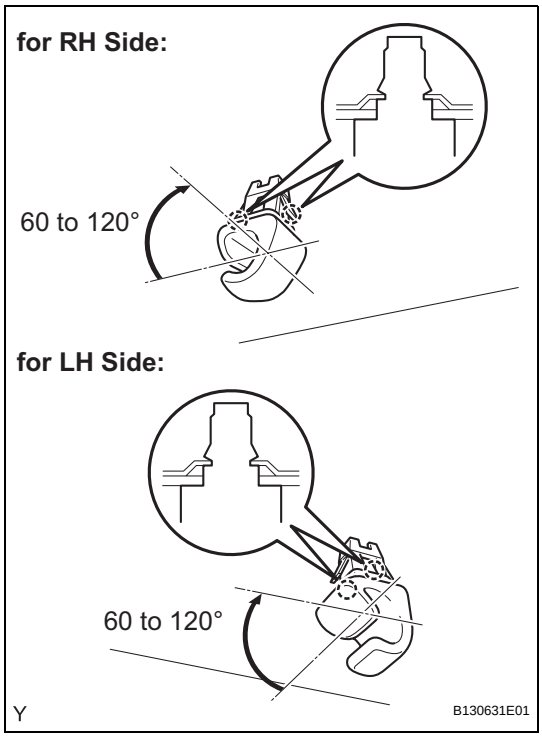

8. INSTALL VISOR HOLDER

HINT:

Use the same procedure for both sides.

(a) Engage the 2 claws by turning the visor holder clockwise between 60 to 120° and install the visor holder.

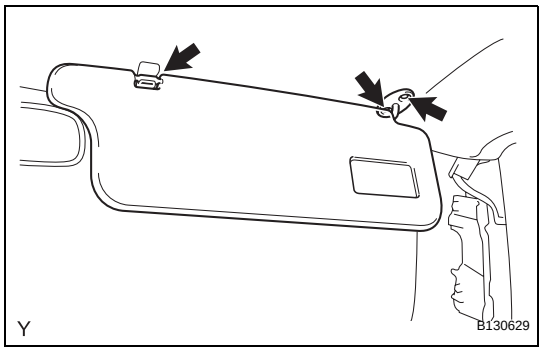

9. INSTALL VISOR ASSEMBLY RH

(a) Install the visor with the 2 screws.

(b) Install the visor support shaft into the visor holder.

10. INSTALL VISOR ASSEMBLY LH

HINT:

Use the same procedure as for the RH side.

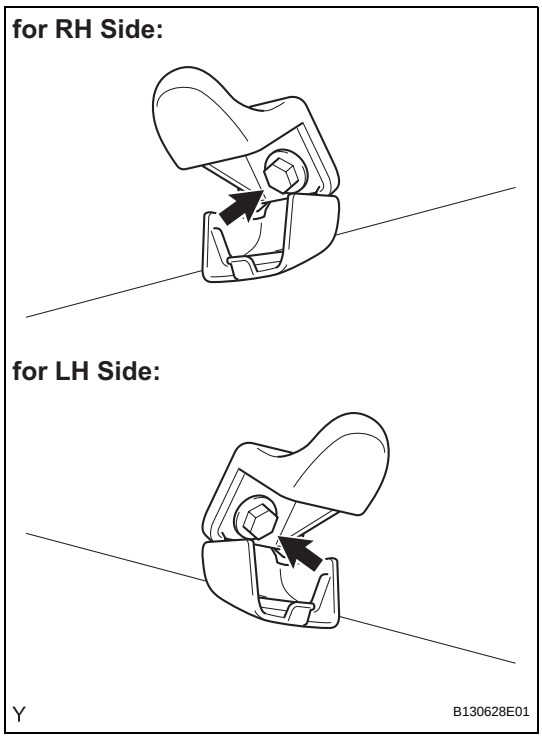

11. INSTALL COAT HOOK

HINT:

Use the same procedure for both sides.

(a) Install the coat hook with the bolt.

(b) Engage the claw and close the cover.

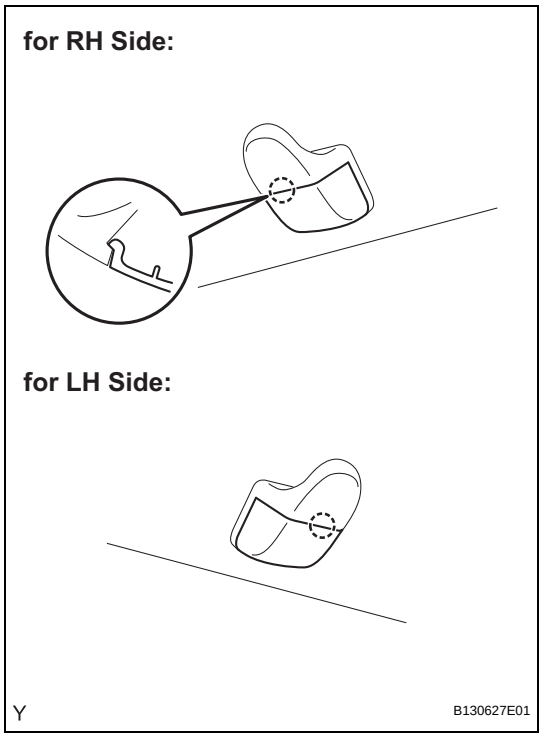

12. INSTALL ROOF HEADLINING HOLE PLUG

HINT:

Use the same procedure for both sides.

(a) Engage the claw and install the roof headlining hole plug.

(b) Tighten the bolt.

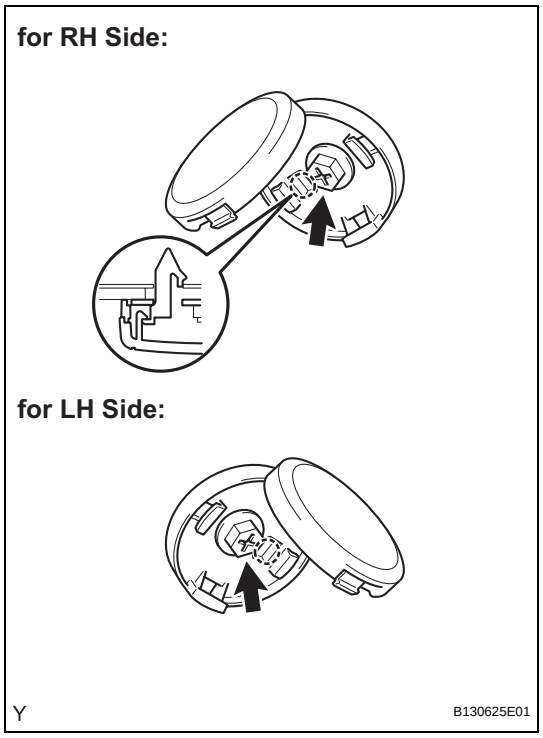

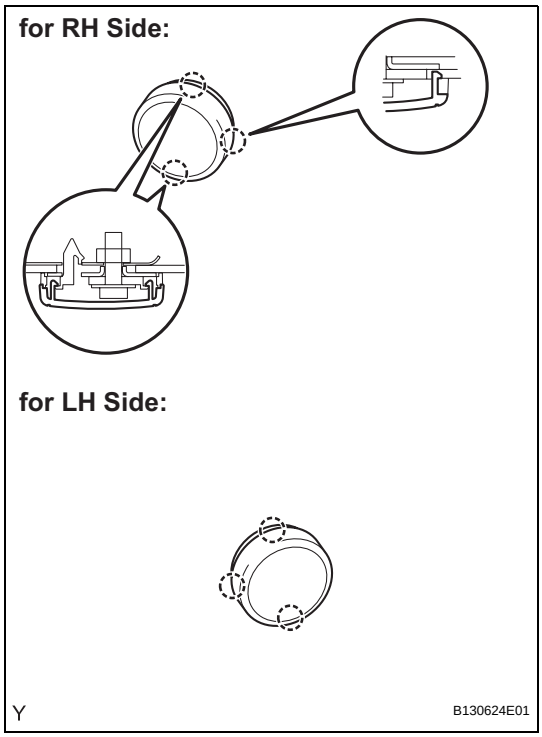

(c) Engage the 3 claws and close the cover.

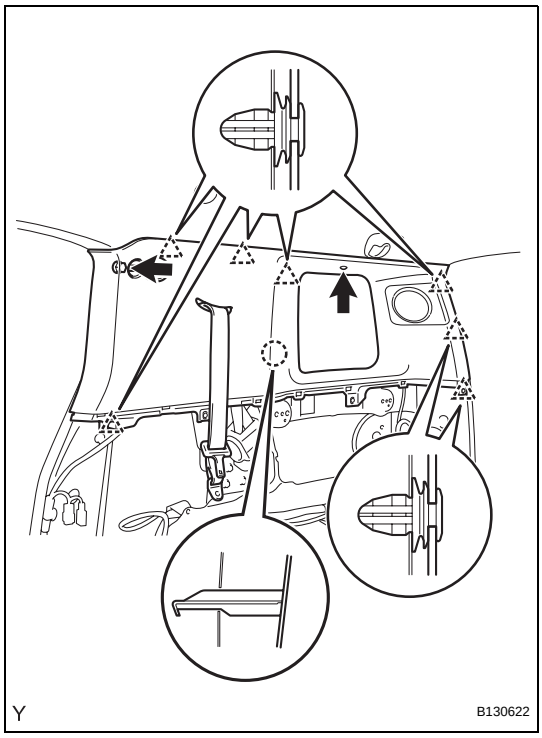

13. INSTALL ROOF SIDE INNER GARNISH RH

(a) Pass the rear seat outer belt through the slit in the roof side inner garnish.
(b) Engage the 7 clips and the claw and install the roof side inner garnish.
(c) Tighten the bolt.
(d) Install the clip.

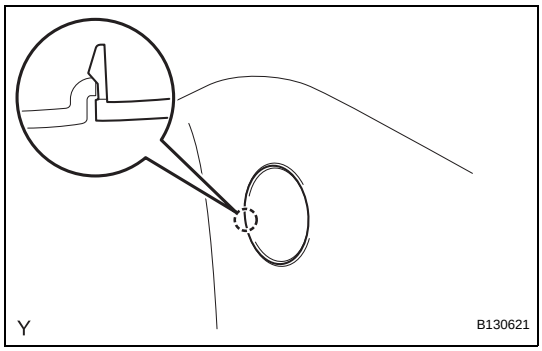

(e) Engage the claw and close the cover.

14. INSTALL ROOF SIDE INNER GARNISH LH

HINT:
Use the same procedure as for the RH side.

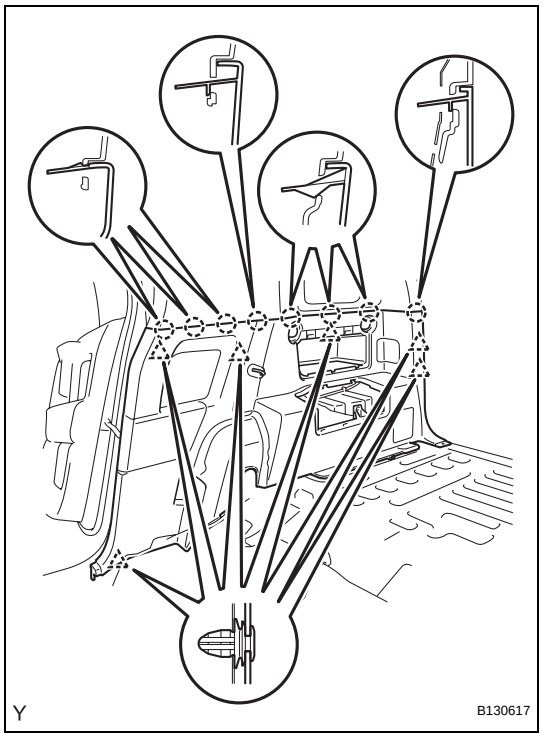

15. INSTALL DECK TRIM SIDE PANEL ASSEMBLY RH

(a) Engage the 6 clips and the 8 claws and install the deck trim side panel.

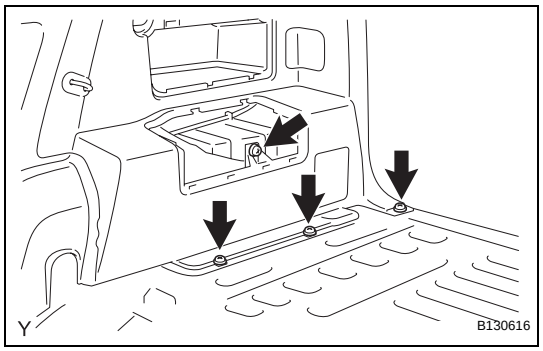

(b) Tighten the 4 screws.

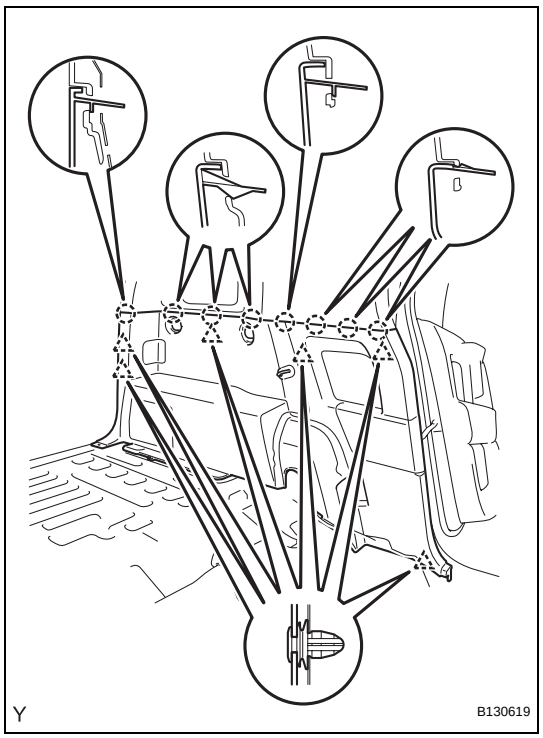

16. INSTALL DECK TRIM SIDE PANEL ASSEMBLY LH

(a) Engage the 6 clips and the 8 claws and install the deck trim side panel.

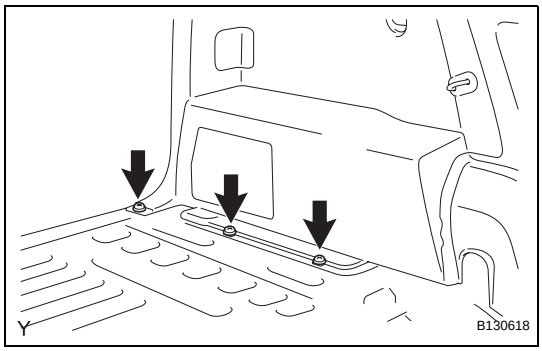

(b) Tighten the 3 screws.

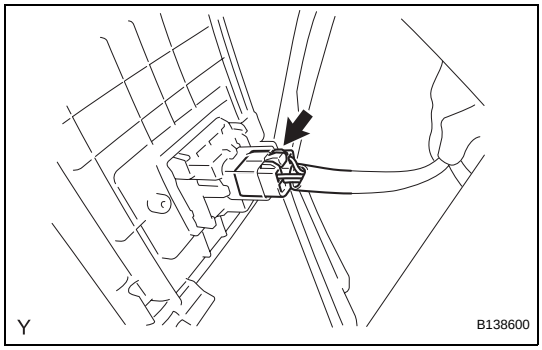

17. INSTALL REAR DECK TRIM COVER (w/ Power Outlet Socket)

(a) Connect the power outlet connector.

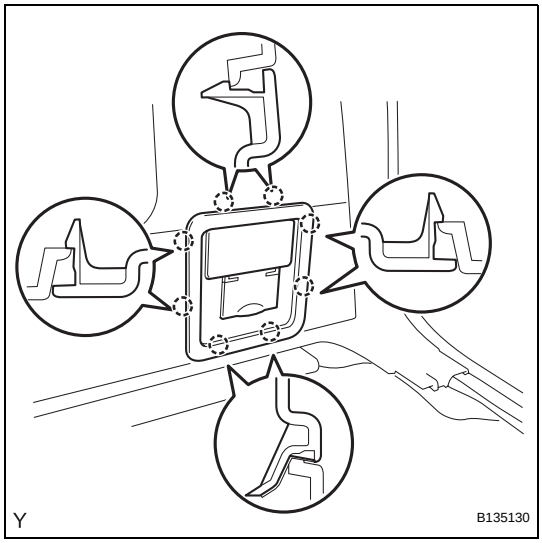

(b) Engage the 8 claws and install the rear deck trim cover.

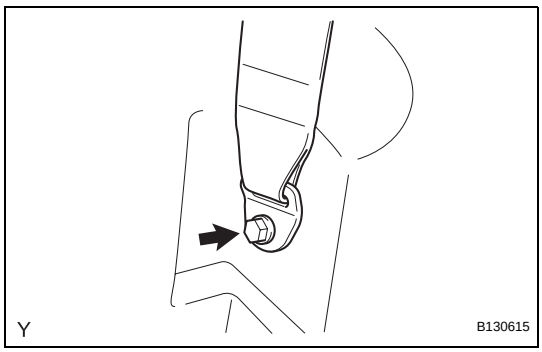

18. INSTALL REAR SEAT OUTER BELT ASSEMBLY RH

(a) Install the anchor plate with the bolt.
Torque: 42 N*m (430 kgf*cm, 31 ft.*lbf)

(b) Make sure that the anchor plate rotates smoothly.

19. INSTALL REAR SEAT OUTER BELT ASSEMBLY LH

HINT:
Use the same procedure as for the RH side.

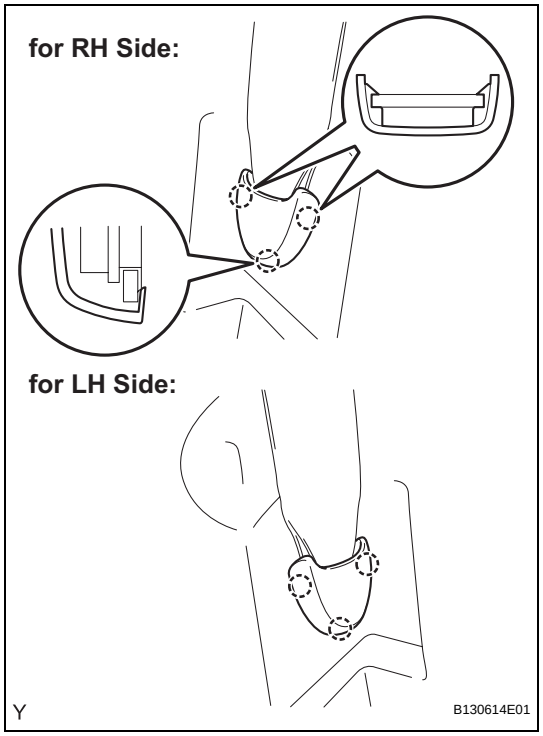

20. INSTALL LAP BELT OUTER ANCHOR COVER

HINT:

Use the same procedure for both sides.

(a) Engage the 3 claws and install the lap belt outer anchor cover.

21. INSTALL AMPLIFIER BOX SPEAKER ASSEMBLY (w/ Woofer) (See page AV-90)

22. INSTALL SPEAKER MOUNTING COVER (w/ Woofer) (See page AV-91)

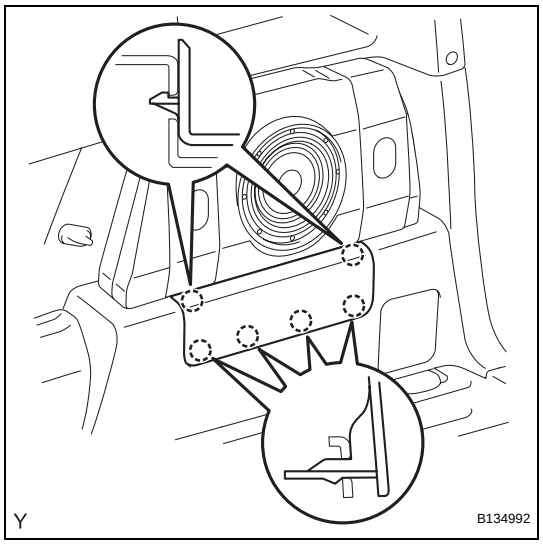

23. INSTALL DECK SIDE GARNISH (w/ Woofer)

(a) Engage the 6 claws and install the deck side garnish.

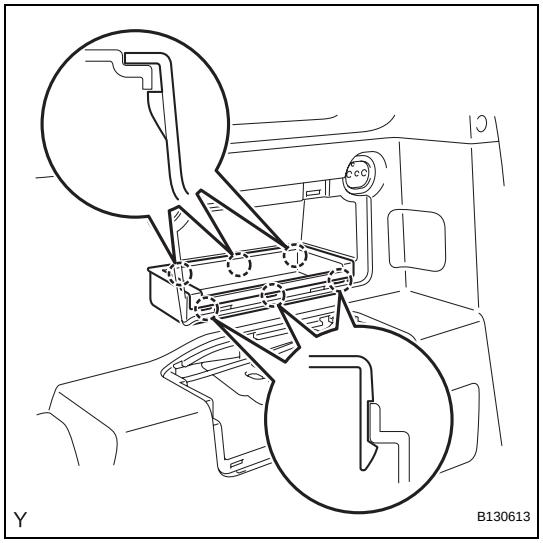

24. INSTALL QUARTER TRIM POCKET (w/o Woofer)

(a) Engage the 6 claws and install the quarter trim pocket.

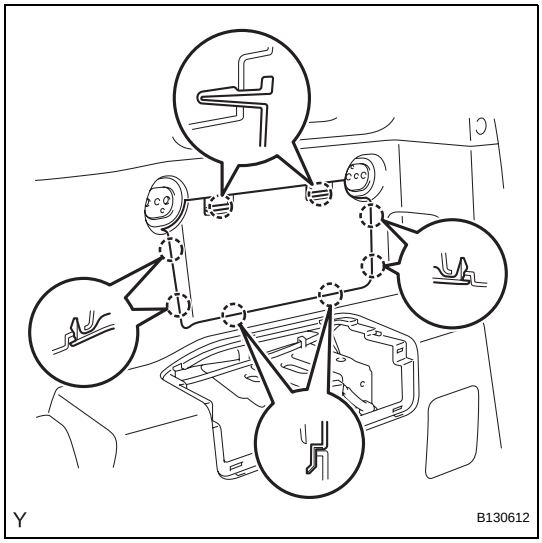

25. INSTALL SIDE TRIM COVER (w/o Woofer)

(a) Engage the 8 claws and install the side trim cover.

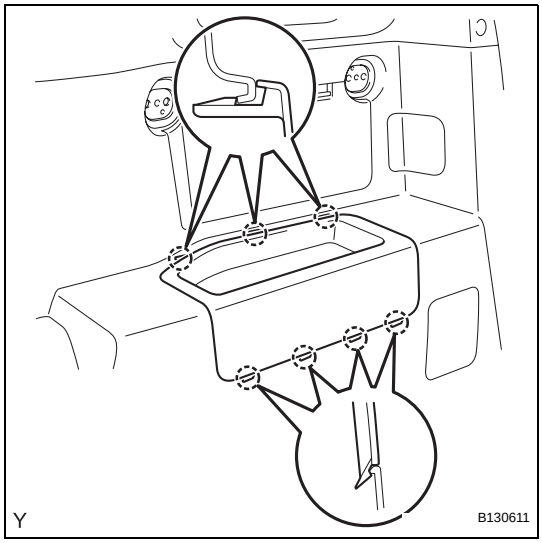

26. INSTALL QUARTER TRIM POCKET TRAY (w/o Woofer)

(a) Engage the 7 claws and install the quarter trim pocket tray.

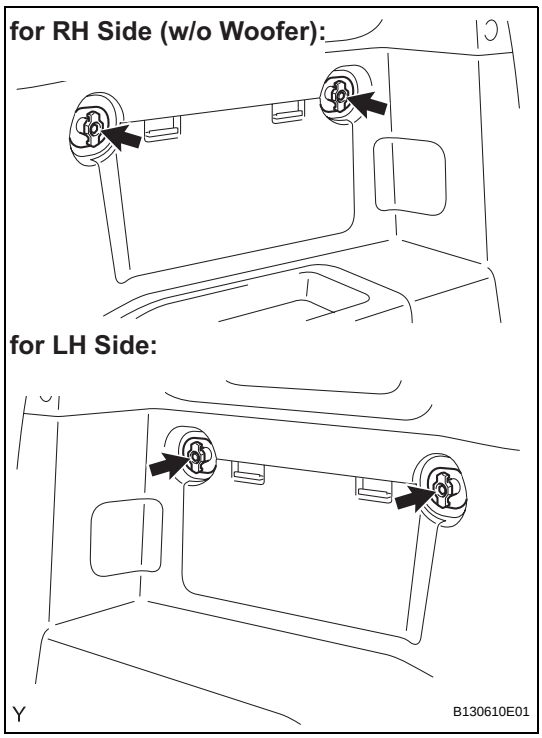

27. INSTALL PACKAGE HOLDER NET HOOK

HINT:

Use the same procedure to install all the package holder net hooks.

(a) Install the package holder net hook with the screw.

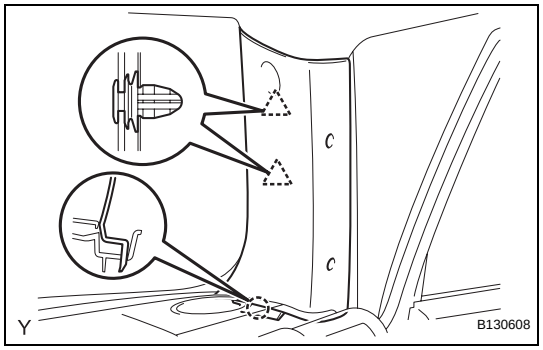

28. INSTALL FRONT PILLAR GARNISH RH

(a) Engage the claw and the 2 clips and install the front pillar garnish.

29. INSTALL FRONT PILLAR GARNISH LH

HINT:

Use the same procedure as for the RH side.

for RH Side:

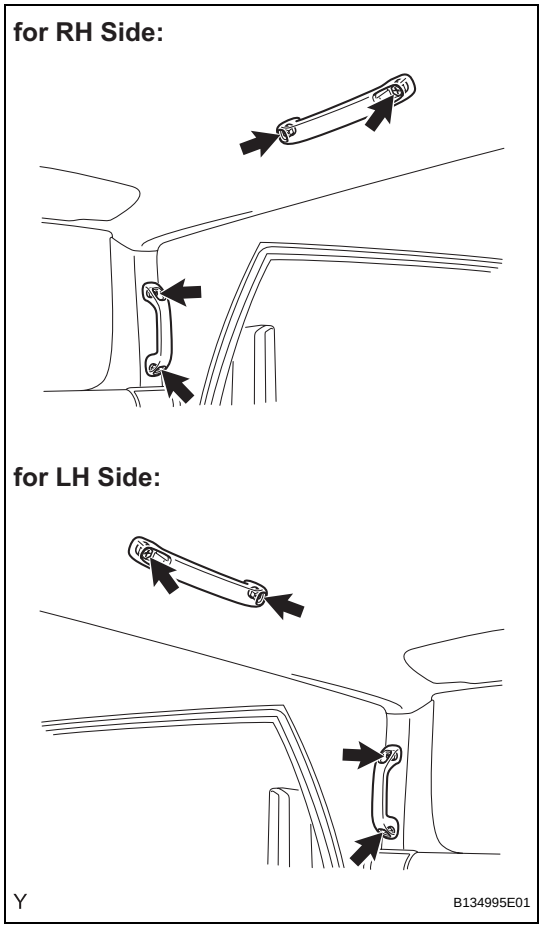

for LH Side:

30. INSTALL ASSIST GRIP ASSEMBLY

HINT:

Use the same procedure to install all the assist grips.

(a) Install the assist grip with the 2 bolts.

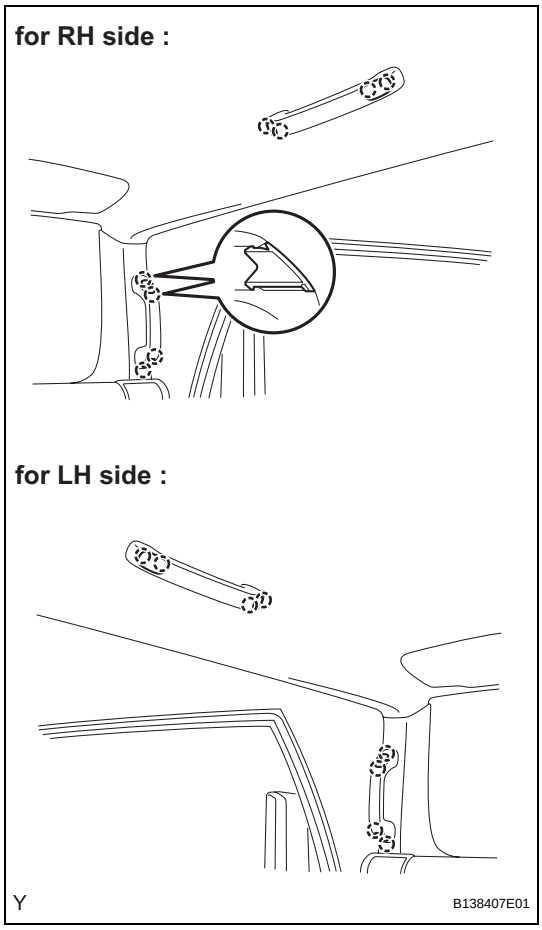

31. INSTALL ASSIST GRIP PLUG

HINT:

Use the same procedure to install all the assist grip plugs.

(a) Engage the 2 claws and install the assist grip plug.

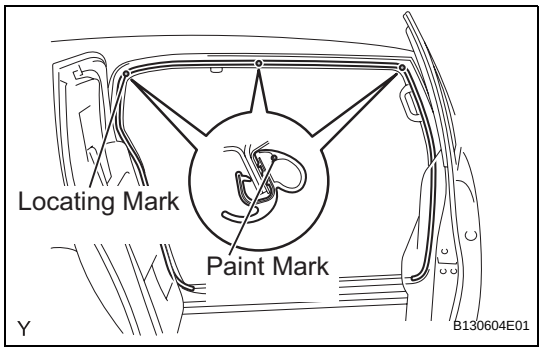

32. INSTALL FRONT DOOR OPENING TRIM WEATHERSTRIP RH

(a) Align the locating marks with the paint marks first, and install the front door opening trim weatherstrip, as shown in the illustration.

Paint mark

Area	Color
RH side	White
LH side	Red

33. INSTALL FRONT DOOR OPENING TRIM WEATHERSTRIP LH

HINT:

Use the same procedure as for the RH side.

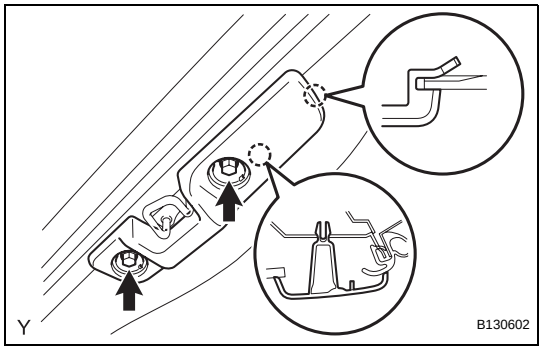

34. INSTALL ROOF SIDE RAIL GARNISH RH

(a) Engage the 2 claws and install the roof side rail garnish.

(b) Tighten the 2 bolts.

35. INSTALL ROOF SIDE RAIL GARNISH LH

HINT:

Use the same procedure as for the RH side.

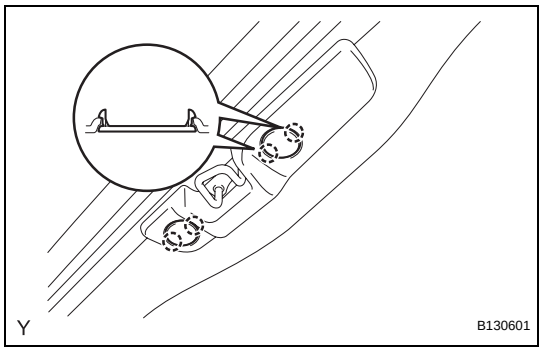

36. INSTALL ROOF SIDE INNER GARNISH COVER RH

HINT:

Use the same procedure for both sides.

(a) Engage the 2 claws and install the roof side inner garnish cover.

37. INSTALL ROOF SIDE INNER GARNISH COVER LH

HINT:

Use the same procedure as for the RH side.

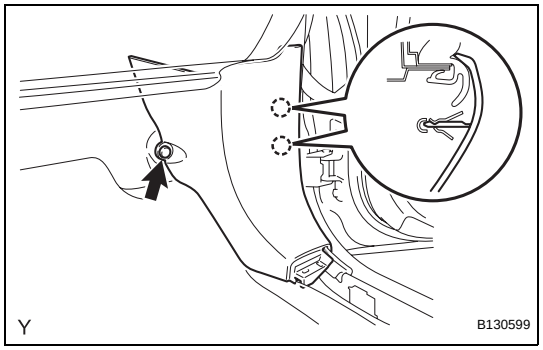

38. INSTALL COWL SIDE TRIM BOARD RH

(a) Engage the 2 claws and install the cowl side trim board.

(b) Install the clip.

39. INSTALL COWL SIDE TRIM BOARD LH

HINT:

Use the same procedure as for the RH side.

40. INSTALL FOOTREST CLIP (See page IR-2)

41. INSTALL FRONT FLOOR FOOTREST (See page IR-2)

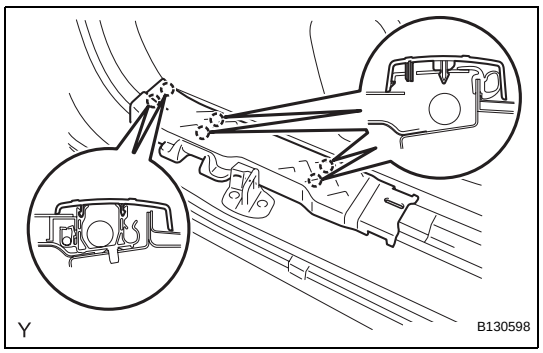

42. INSTALL ACCESS DOOR SCUFF PLATE RH

(a) Engage the 6 claws and install the access door scuff plate.

43. INSTALL ACCESS DOOR SCUFF PLATE LH

HINT:

Use the same procedure as for the RH side.

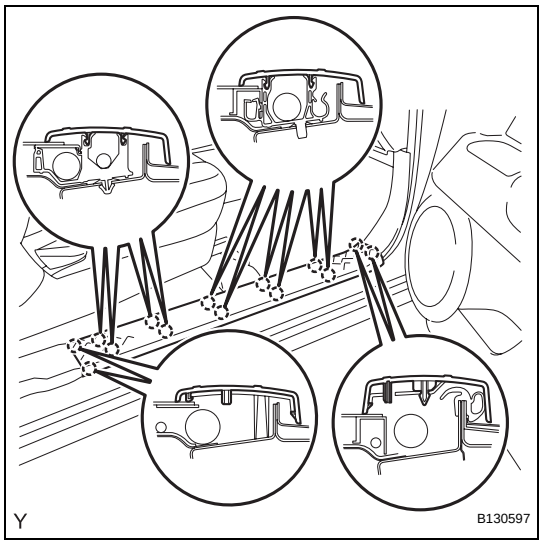

44. INSTALL FRONT DOOR SCUFF PLATE RH

(a) Engage the 14 claws and install the door scuff plate.

45. INSTALL FRONT DOOR SCUFF PLATE LH

HINT:

Use the same procedure as for the RH side.

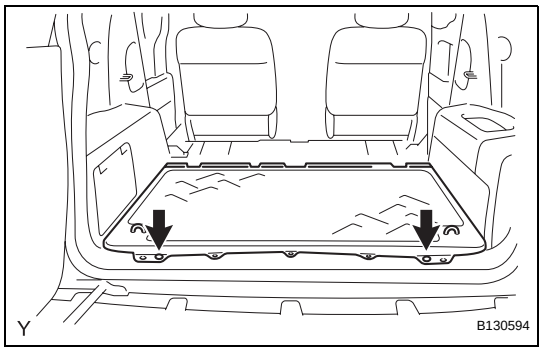

46. INSTALL REAR FLOOR MAT ASSEMBLY

(a) Install the rear floor mat with the 2 clips.

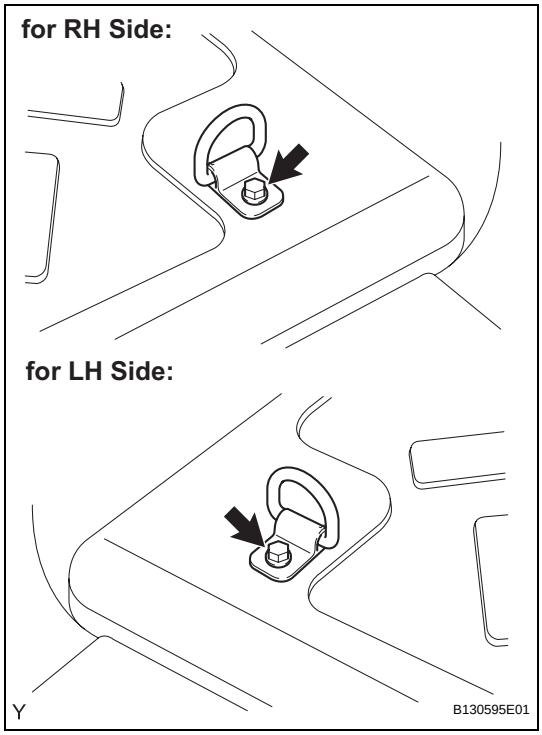

47. INSTALL LUGGAGE HOLD BELT STRIKER ASSEMBLY

HINT:

Use the same procedure for both sides.

(a) Install the luggage hold belt striker with the bolt.

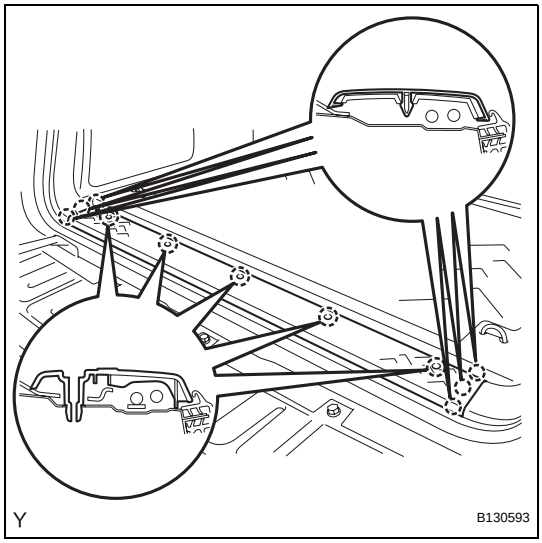

48. INSTALL REAR FLOOR MAT SUPPORT PLATE

(a) Engage the 11claws and install the rear floor mat support plate.

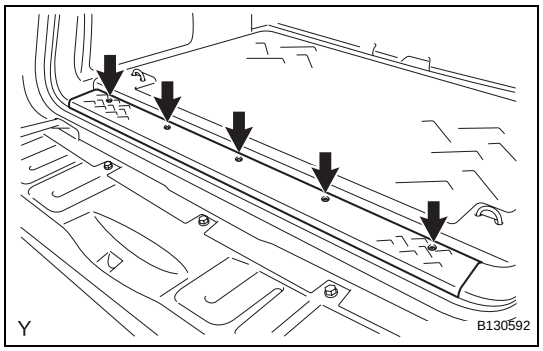

(b) Tighten the 5 screws.

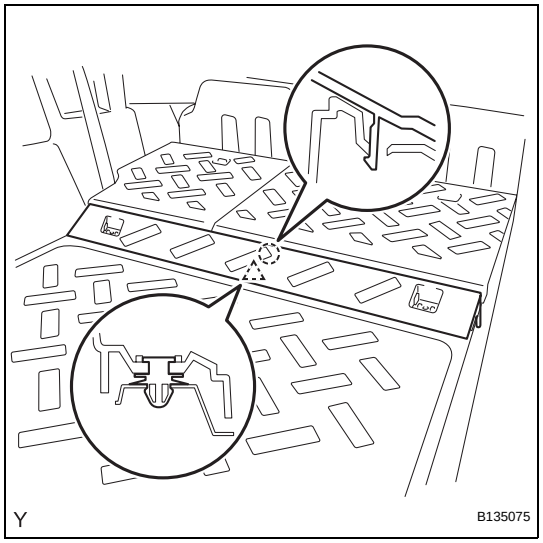

49. INSTALL REAR FLOOR BOARD

(a) Engage the clip and claw and install the rear floor board.

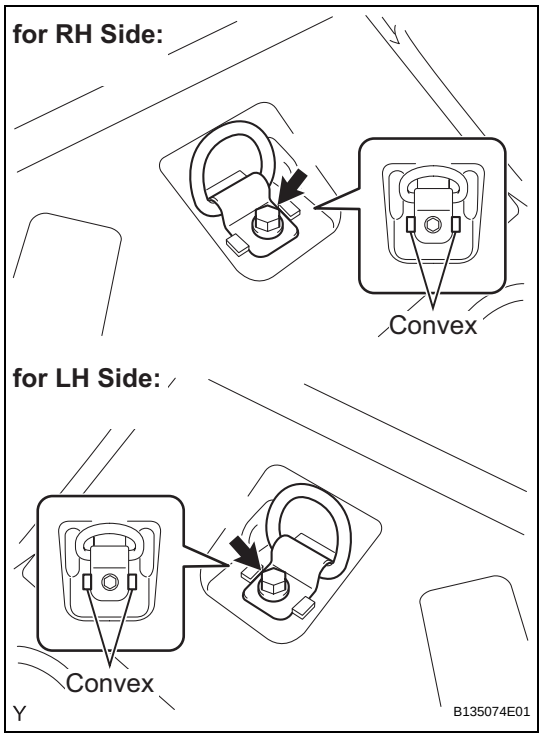

(b) Install the luggage hold belt striker with the bolt.
HINT:
Use the same procedure for both sides.

50. INSTALL REAR SEATBACK ASSEMBLY RH (See page SE-54)

51. INSTALL REAR SEATBACK BOARD CARPET ASSEMBLY RH (See page SE-54)

52. INSTALL REAR SEATBACK ASSEMBLY LH (See page SE-38)

53. INSTALL REAR SEATBACK BOARD CARPET ASSEMBLY LH (See page SE-38)

54. CONNECT CABLE TO NEGATIVE BATTERY TERMINAL
Torque: 3.9 N*m (40 kgf*cm, 35 in.*lbf)

HOW TO USE THIS MANUAL

GENERAL INFORMATION

1. GENERAL DESCRIPTION

(a) This manual is written in accordance with SAE J2008.
  (1) Diagnosis
  (2) Removing / Installing, Replacing, Disassembling / Reassembling, Checking and Adjusting
  (3) Final Inspection

(b) The following procedures are omitted from this manual. However, these procedures must be performed.
  (1) Use a jack or lift to perform operations.
  (2) Clean all removed parts.
  (3) Perform a visual check.

2. INDEX

(a) An alphabetical INDEX section is provided at the end of the manual as a reference to help you find the item to be repaired.

3. PREPARATION

(a) Use of Special Service Tools (SST) and Special Service Materials (SSM) may be required, depending on the repair procedure. Be sure to use SST and SSM when they are required and follow the working procedures properly. A list of SST and SSM is in the "Preparation" section of this manual.

4. REPAIR PROCEDURES

(a) A component illustration is placed under the title where necessary.

(b) Non-reusable parts, grease application areas, precoated parts and torque specifications are noted in the component illustrations.
The following illustration is an example.

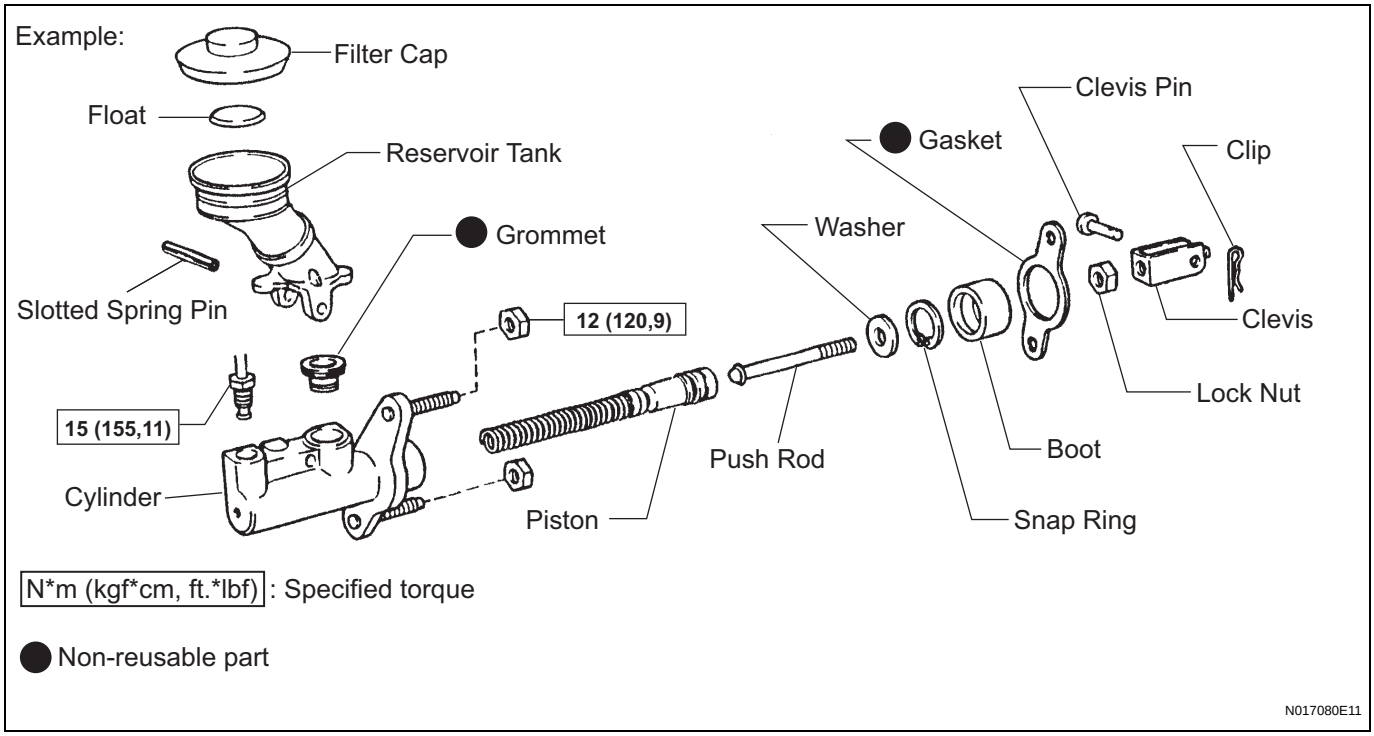

(c) Torque specifications, grease application areas and non-reusable parts are emphasized in the procedures.
HINT:
There are cases where such information can only be explained by using an illustration. In these cases, torque, oil and other information are described in the illustration.

(d) Only items with key points are described in the text. What to do and other details are explained using illustrations next to the text. Both the text and illustrations are accompanied by standard values and notices.

Illustration	What to do and where to do it
Task heading	What work will be performed
Explanation text	• How to perform the task • Information such as specifications and warnings, which are written in boldface text

(e) Illustrations of similar vehicle models are sometimes used. In these cases, minor details may be different from the actual vehicle.

(f) Procedures are presented in a step-by-step format.

5. SERVICE SPECIFICATIONS

(a) SPECIFICATIONS are presented in boldface text throughout the manual. The specifications are also found in the "Service Specifications" section for reference.

6. TERM DEFINITIONS

CAUTION	Possibility of injury to you or other people.
NOTICE	Possibility of damage to components being repaired.
HINT	Provides additional information to help you perform repairs.

7. INTERNATIONAL SYSTEM OF UNITS

(a) The units used in this manual comply with the International System of Units (SI UNIT) standard. Units from the metric system and the English system are also provided.
Example:
Torque: 30 N*m (310 kgf*cm, 22 ft.*lbf)

IN

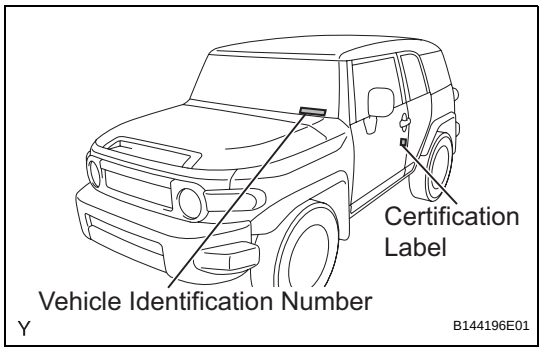

IDENTIFICATION INFORMATION

VEHICLE IDENTIFICATION AND SERIAL NUMBERS

1. VEHICLE IDENTIFICATION NUMBER

(a) The vehicle identification number is stamped on the vehicle body and on the certification label, as shown in the illustration.
(1) Vehicle Identification Number
(2) Certification Label

2. ENGINE SERIAL NUMBER AND TRANSMISSION SERIAL NUMBER

(a) The engine serial number is stamped on the cylinder block of the engine and the transmission serial number is stamped on the housing as shown in the illustration.
(1) Engine Serial Number

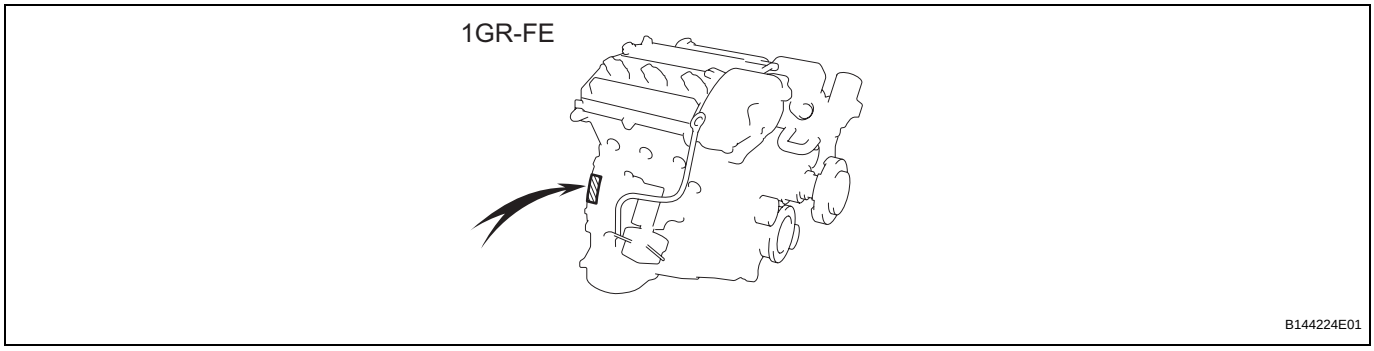

(2) Transmission Serial Number

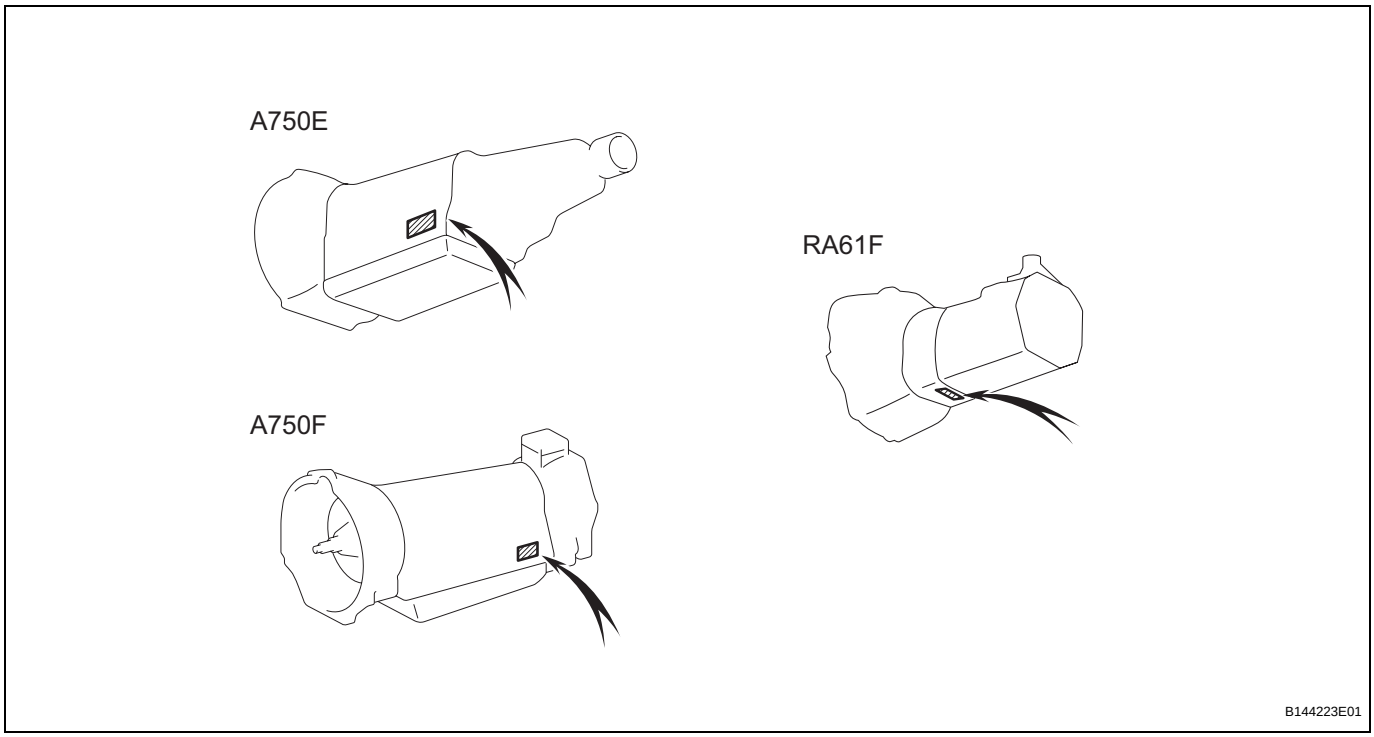

REPAIR INSTRUCTION

PRECAUTION

1. BASIC REPAIR HINT

(a) HINTS ON OPERATIONS

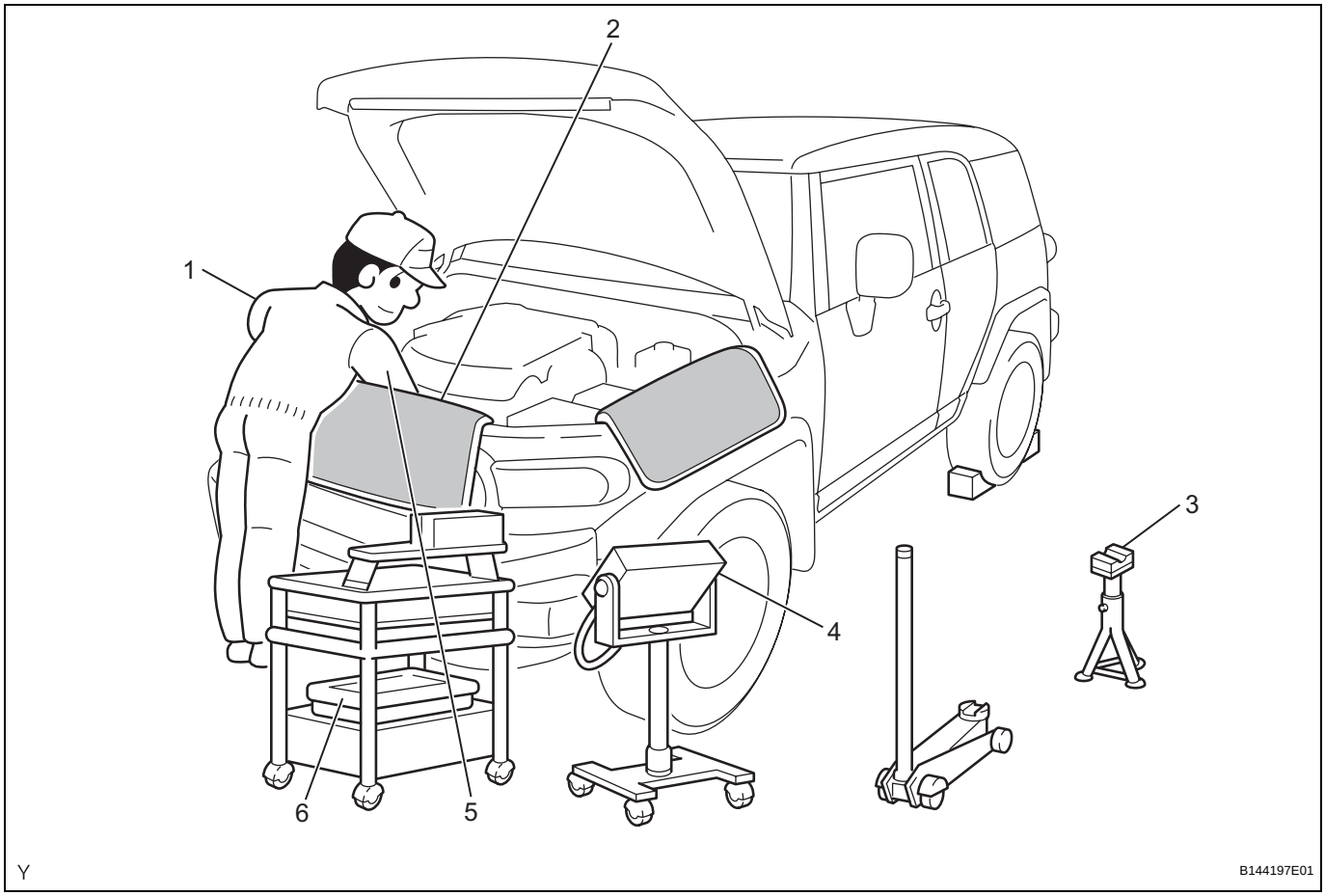

1	Attire	• Always wear a clean uniform. • A hat and safety shoes must be worn.
2	Vehicle protection	Prepare a grille cover, fender cover, seat cover and floor mat before starting the operation.
3	Safe operation	• When working with 2 or more persons, be sure to check safety for one another. • When working with the engine running, make sure to provide ventilation for exhaust fumes in the workshop. • If working on high temperature, high pressure, rotating, moving, or vibrating parts, wear appropriate safety equipment and take extra care not to injure yourself or others. • When jacking up the vehicle, be sure to support the specified location with a safety stand. • When lifting up the vehicle, use appropriate safety equipment.
4	Preparation of tools and measuring gauge	Before starting the operation, prepare a tool stand, SST, gauge, oil and parts for replacement.
5	Removal and installation, disassembly and assembly operations	• Diagnose with a thorough understanding of proper procedures and of the reported problem. • Before removing parts, check the general condition of the assembly and for deformation and damage. • When the assembly is complicated, take notes. For example, note the total number of electrical connections, bolts, or hoses removed. Add matchmarks to ensure reassembly of components to their original positions. Temporarily mark hoses and their fittings if needed. • Clean and wash the removed parts if necessary and assemble them after a thorough check.

6	Removed parts	• Place removed parts in a separate box to avoid mixing them up with new parts or contaminating new parts. • For non-reusable parts such as gaskets, O-rings, and self-locking nuts, replace them with new ones as instructed in this manual. • Retain the removed parts for customer inspection, if requested.

IN

(b) JACKING UP AND SUPPORTING VEHICLE
(1) Care must be taken when jacking up and supporting the vehicle. Be sure to lift and support the vehicle at the proper locations.

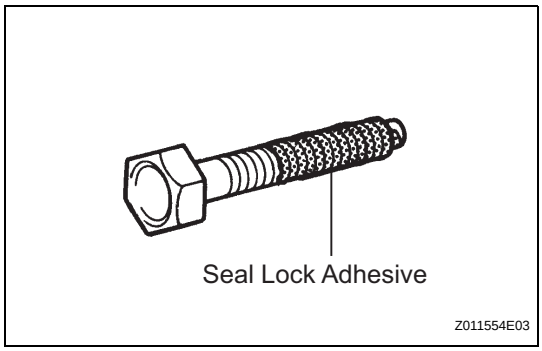

(c) PRECOATED PARTS
(1) Precoated parts are bolts and nuts that are coated with a seal lock adhesive at the factory.
(2) If a precoated part is retightened, loosened or moved in any way, it must be recoated with the specified adhesive.
(3) When reusing a precoated part, clean off the old adhesive and dry the part with compressed air. Then apply new seal lock adhesive appropriate to that part.
(4) Some seal lock agents harden slowly. You may have to wait for the seal lock adhesive to harden.

(d) GASKETS
(1) When necessary, use a sealer on gaskets to prevent leaks.

(e) BOLTS, NUTS AND SCREWS
(1) Carefully follow all the specifications for tightening torques. Always use a torque wrench.

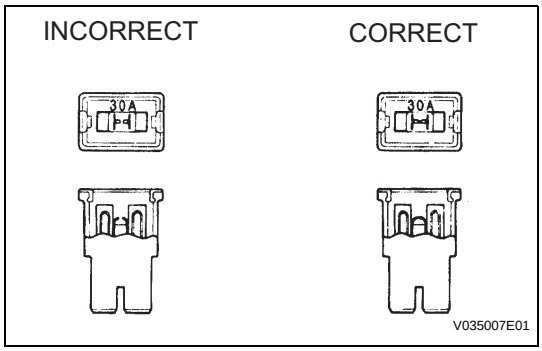

(f) FUSES
(1) When inspecting a fuse, check that the wire of the fuse is not broken.
(2) When replacing fuses, be sure that the new fuse has the correct amperage rating. Do not exceed the rating or use one with a lower rating.

Illustration	Symbol	Part Name	Abbreviation
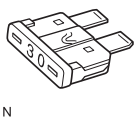 N	N	FUSE	FUSE

Illustration	Symbol	Part Name	Abbreviation
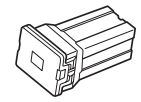 N	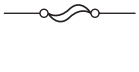 N	MEDIUM CURRENT FUSE	M-FUSE
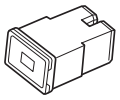 N	 N	HIGH CURRENT FUSE	H-FUSE
 N	 N	FUSIBLE LINK	FL
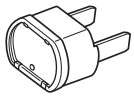 N	 N	CIRCUIT BREAKER	CB

(g) CLIPS

(1) The removal and installation methods of typical clips used for vehicle body parts are shown in the table below.

HINT:

If clips are damaged during a procedure, always replace the damaged clip with a new clip.

IN

Shape (Example)	Illustration	Procedures
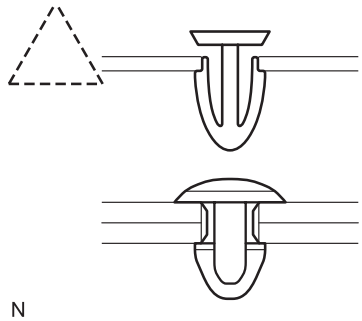 N	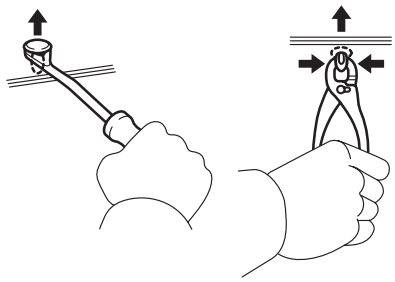 N	1. Remove the clips with a clip remover or pliers.
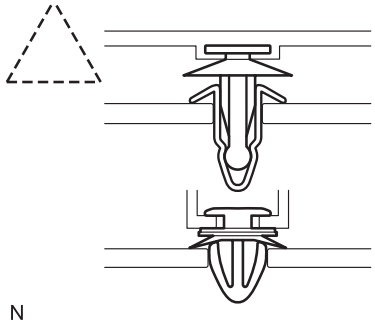 N	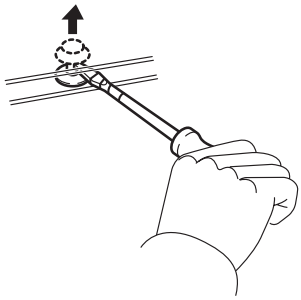 N	1. Remove the clips with a clip remover or screwdriver.
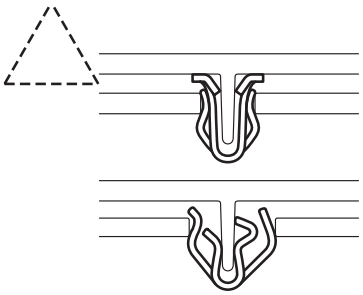 N	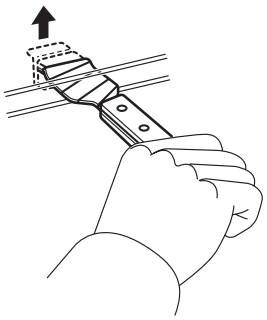 N	1. Remove the clips with a wide scraper to prevent panel damage.
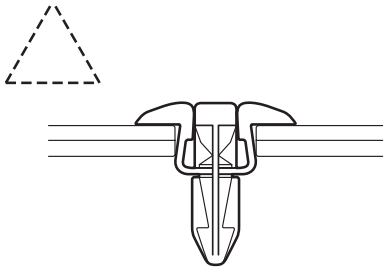 N	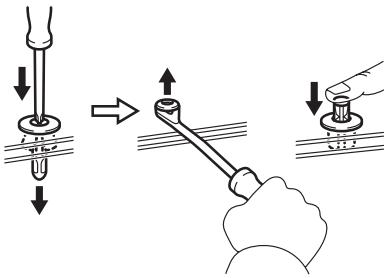 N	1. Remove the clips by pushing the center pin through and prying out the shell.

Shape (Example)	Illustration	Procedures
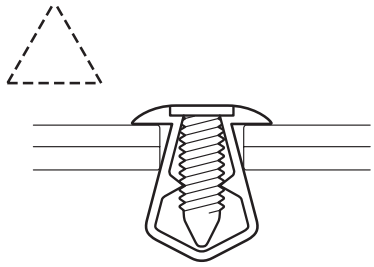 N	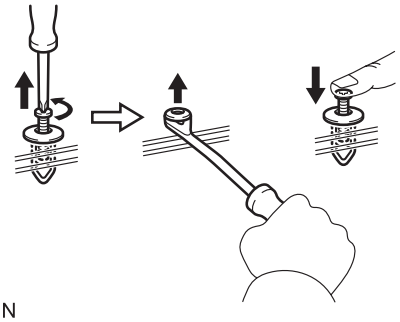 N	1. Remove the clips by unscrewing the center pin and prying out the shell.
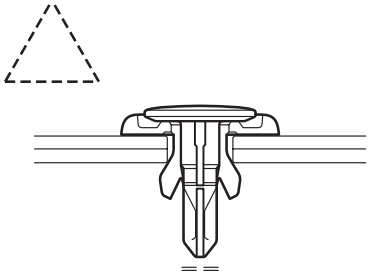 N	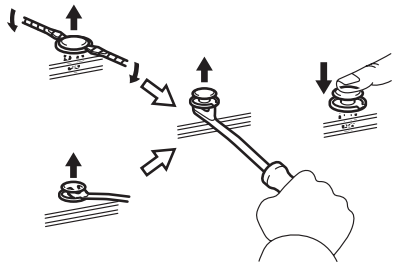 N	1. Remove the clips by prying out the pin and then prying out the shell.

(h) CLAWS

(1) The removal and installation methods of typical claws used for vehicle body parts are shown in the table below.

HINT:

If claws are damaged during a procedure, always replace the damaged claws with new caps or covers.

Shape (Example)	Illustration	Procedures
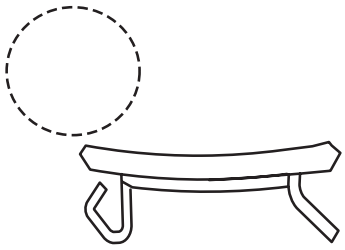	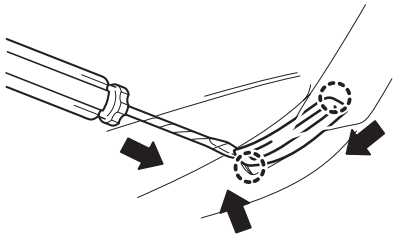	1. Using a screwdriver, detach the claws and remove the cap or covers.
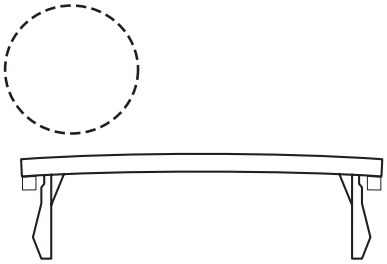	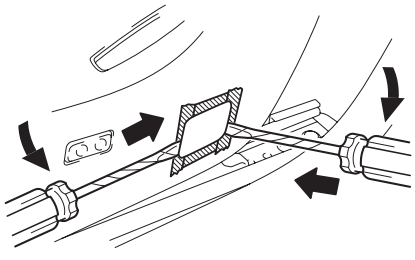	1. Using a screwdriver, detach the claws and remove the cap or covers.

IN

Shape (Example)	Illustration	Procedures
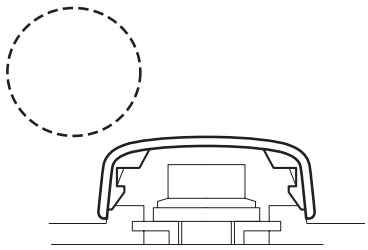	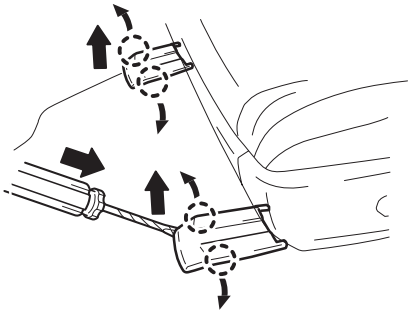	1. Using a screwdriver, detach the claws and remove the cap or covers.

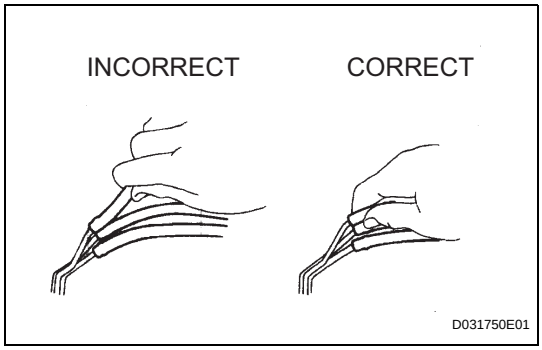

(i) REMOVAL AND INSTALLATION OF VACUUM HOSES

(1) To disconnect a vacuum hose, pull and twist from the end of the hose. Do not pull from the middle of the hose as this may cause damage.

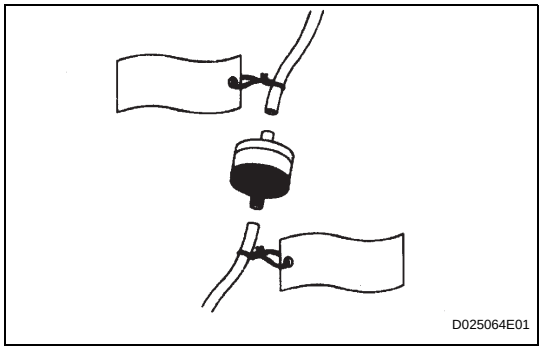

(2) When disconnecting vacuum hoses, use tags to identify where they should be reconnected.

(3) After completing any hose related repairs, double check that the vacuum hoses are properly connected. The label under the hood shows the proper layout.

(4) When using a vacuum gauge, never force the hose onto a connector that is too large. If a hose has been stretched, it may leak air. Use a step-down adapter if necessary.

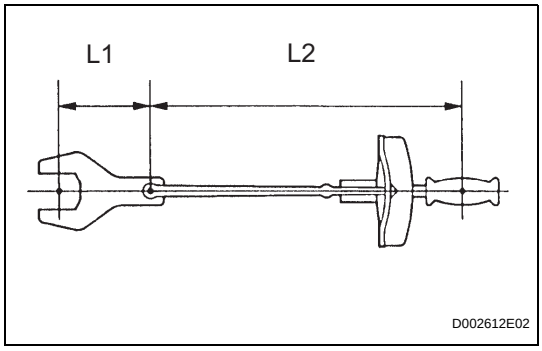

(j) TORQUE WHEN USING TORQUE WRENCH WITH EXTENSION TOOL

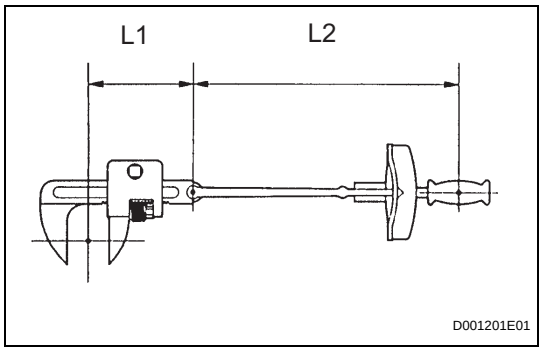

(1) Use the formula below to calculate special torque values for situations where SST or an extension tool is combined with a torque wrench.
Formula:
T' = L2 / (L1 + L2) * T

T'	**Reading of torque wrench {N*m (kgf*cm, ft.*lbf)}**
T	**Torque {N*m (kgf*cm, ft.*lbf)}**
L1	**Length of SST or extension tool {cm (in.)}**
L2	**Length of torque wrench {cm (in.)}**

NOTICE:
If an extension tool or SST is combined with a torque wrench and the wrench is used to tighten to a torque specification in this manual, the actual torque will be excessive and parts will be damaged.

2. FOR VEHICLES EQUIPPED WITH SRS AIRBAG AND FRONT SEAT OUTER BELT ASSEMBLY WITH PRETENSIONER

The FJ CRUISER is equipped with a Supplemental Restraint System (SRS).

CAUTION:
Failure to carry out the service operations in the correct sequence could cause the SRS to unexpectedly deploy during servicing and lead to serious injury. Furthermore, if a mistake is made when servicing the SRS, it is possible that the SRS may fail to operate properly. Before servicing (including removal or installation of parts, inspection or replacement), be sure to read the following section carefully.

(a) GENERAL NOTICE

(1) As malfunctions of the SRS are difficult to confirm, the Diagnostic Trouble Codes (DTCs) become the most important source of information when troubleshooting. When troubleshooting the SRS, always check the DTCs before disconnecting the battery.

(2) Work must be started at least 90 seconds after the ignition switch is turned OFF and after the cable is disconnected from the negative (-) battery terminal.
(The SRS is equipped with a backup power source. If work is started within 90 seconds after turning the ignition switch OFF and disconnecting the cable from the negative (-) battery terminal, the SRS may deploy.
When the cable is disconnected from the negative (-) battery terminal, clock and audio system memory is erased. Before starting work, make a note of the settings of each memory system. When work is finished, reset the clock and audio system as before.
CAUTION:
Never use a backup power source (battery or other) to avoid erasing system memory. The backup power source may inadvertently power the SRS and cause it to deploy.

(3) Even in cases of a minor collision where the SRS does not deploy, the steering wheel pad, front passenger airbag assembly, front seat side airbag assembly, curtain shield airbag assembly and seat belt pretensioner should be inspected

(4) In minor collisions where the SRS does not deploy, the steering wheel pad, front passenger airbag assembly, front seat side airbag assembly, curtain shield airbag assembly and seat belt pretensioner should be inspected before further use of the vehicle.

(5) Never use SRS parts from another vehicle. When replacing parts, use new parts.

(6) Before repairs, remove the airbag sensor assemblies if impacts are likely to be applied to the sensor during repairs.

(7) Never disassemble and attempt to repair the steering wheel pad, front passenger airbag assembly, side airbag assembly, curtain shield airbag assembly and seat belt pretensioner.

(8) Replace the steering wheel pad, front passenger airbag assembly, front seat side airbag assembly, curtain shield airbag assembly and seat belt pretensioner if: 1) damage has occurred from being dropped, or 2) cracks, dents or other defects in the case, bracket or connector are present.

(9) Do not directly expose the airbag sensor assemblies or airbag assemblies to hot air or flames.

(10) Use an ohmmeter / voltmeter with high impedance (10 kΩ/V minimum) for troubleshooting electrical circuits.

(11)Information labels are attached to the SRS components. Follow the instructions on the labels.

(12)After work on the SRS is completed, check the SRS warning light.

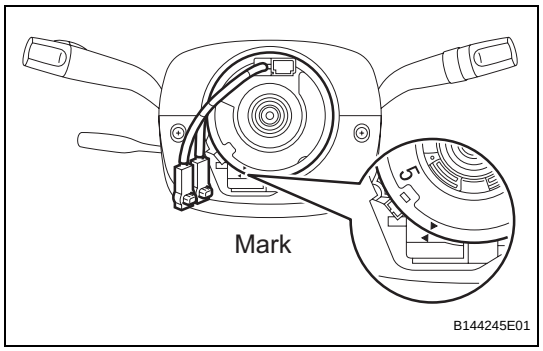

(b) SPIRAL CABLE

(1) The steering wheel must be fitted correctly to the steering column with the spiral cable at the neutral position, as cable disconnection and other problems may occur. Refer to the information about correct installation of the steering wheel.

(c) STEERING PAD

(1) Always place a removed or new steering pad surface upward as shown in the illustration. Placing the horn button with the pad surface facing down could cause a serious accident if the airbag inflates. Also, do not place anything on top of the horn button.

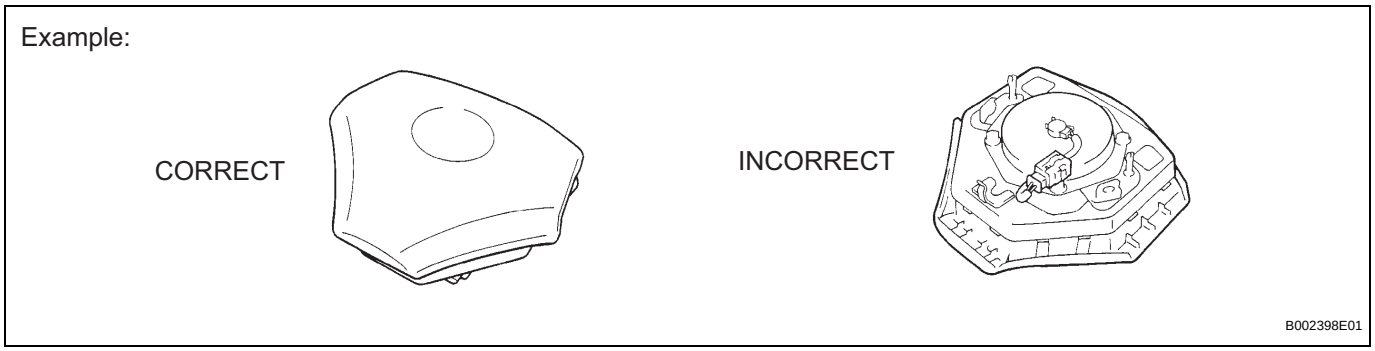

(2) Never measure the resistance of the airbag squib. This may cause the airbag to inflate, which could cause serious injury.

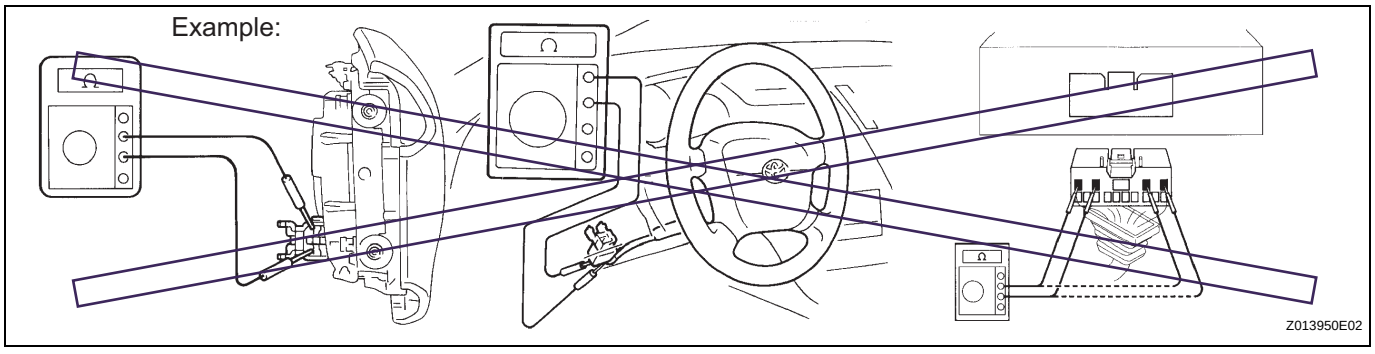

(3) Grease or detergents of any kind should not be applied to the horn button.

(4) Store the horn button assembly in an area where the ambient temperature is below 93°C (200°F), the humidity is not high and there is no electrical noise.

(5) When using electric welding anywhere on the vehicle, disconnect the airbag ECU connectors (4 pins). These connectors contain shorting springs. This feature reduces the possibility of the airbag deploying due to currents entering the squib wiring.

(6) When disposing of the vehicle or the horn button assembly by itself, the airbag should be deployed using SST before disposal. Activate the airbag in a safe place away from electrical noise.

(d) FRONT PASSENGER AIRBAG ASSEMBLY

(1) Always place a removed or new front passenger airbag assembly with the pad surface facing upward as shown in the illustration. Placing the airbag assembly with the airbag inflation direction facing down could cause a serious accident if the airbag inflates.

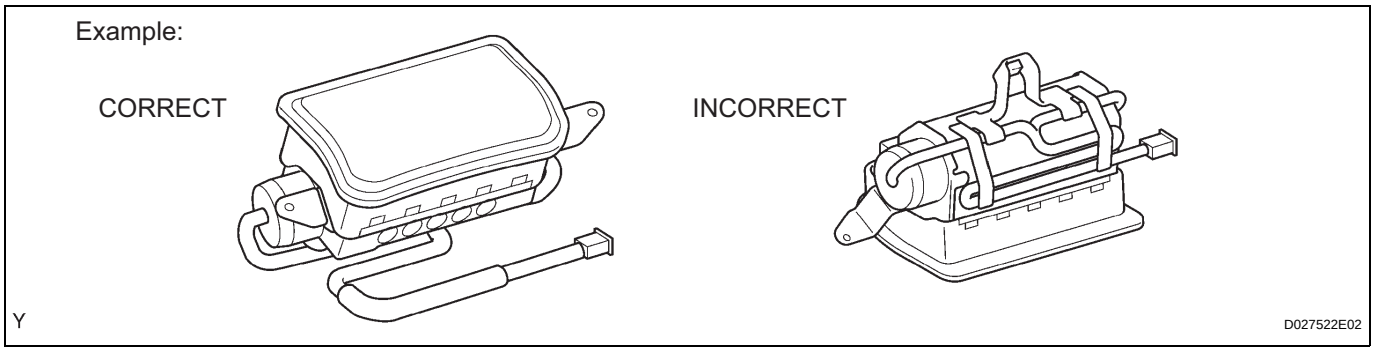

(2) Never measure the resistance of the airbag squib. This may cause the airbag to inflate, which could cause serious injury.

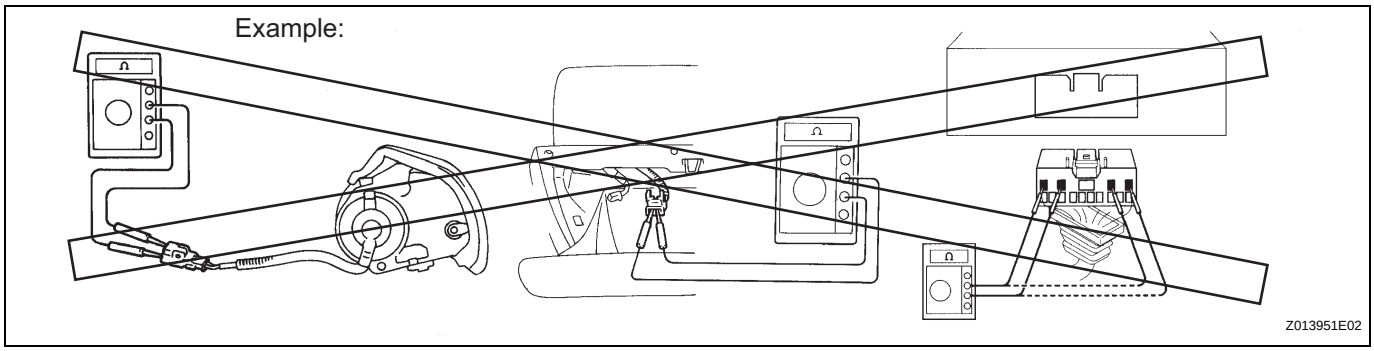

(3) Grease or detergents of any kind should not be applied to the front passenger airbag assembly.

(4) Store the airbag assembly in an area where the ambient temperature is below 93°C (200°F), the humidity is not high and there is no electrical noise.

(5) When using electric welding anywhere on the vehicle, disconnect the airbag ECU connectors (4 pins). These connectors contain shorting springs. This feature reduces the possibility of the airbag deploying due to currents entering the squib wiring.

(6) When disposing of the vehicle or the airbag assembly unit by itself, the airbag should be deployed using SST before disposal. Activate the airbag in a safe place away from electrical noise.

(e) CURTAIN SHIELD AIRBAG ASSEMBLY

(1) Always place a removed or new curtain shield airbag assembly in a clear plastic bag, and keep it in a safe place.

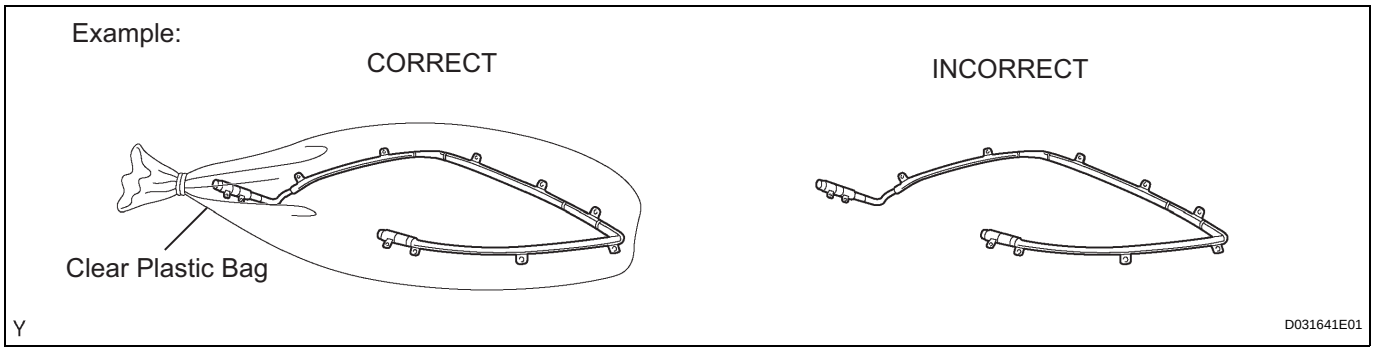

CAUTION:
The plastic bag is not reusable.
NOTICE:
Never disassemble the curtain shield airbag assembly.

(2) Never measure the resistance of the airbag squib. This may cause the airbag to inflate, which could cause serious injury.

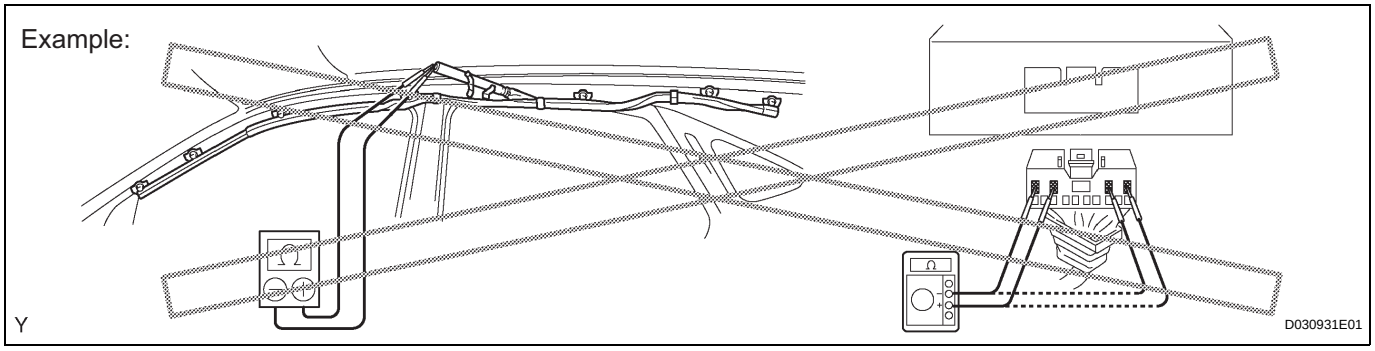

(3) Grease or detergents of any kind should not be applied to the curtain shield airbag assembly.

(4) Store the airbag assembly in an area where the ambient temperature is below 93°C (200°F), the humidity is not high and there is no electrical noise.

(5) When using electric welding anywhere on the vehicle, disconnect the airbag ECU connectors (4 pins). These connectors contain shorting springs. This feature reduces the possibility of the airbag deploying due to currents entering the squib wiring.

(6) When disposing of a vehicle or the airbag assembly unit by itself, the airbag should be deployed using SST before disposal. Activate the airbag in a safe place away from electrical noise.

(f) FRONT SEAT SIDE AIRBAG ASSEMBLY

(1) Always place a removed or new front seat airbag assembly with the airbag inflation direction facing up.

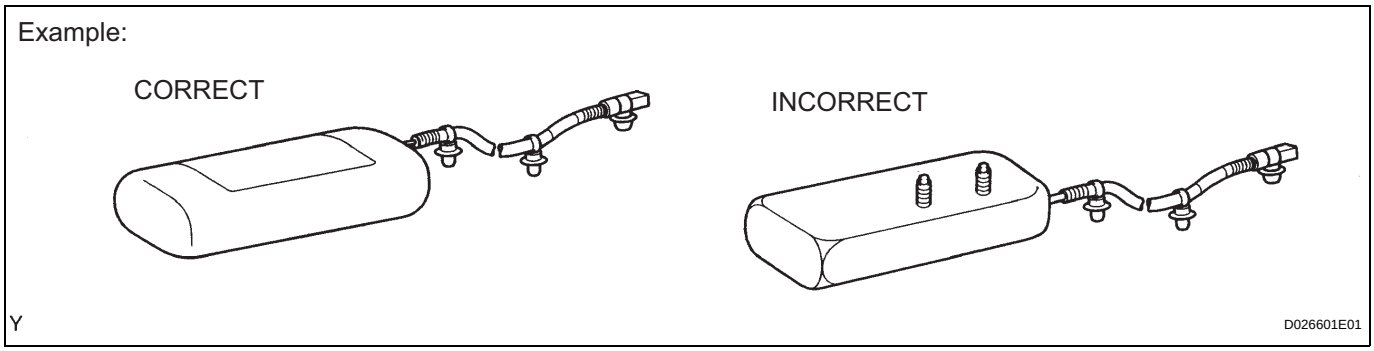

(2) Never measure the resistance of the airbag squib. This may cause the airbag to inflate, which could cause serious injury.

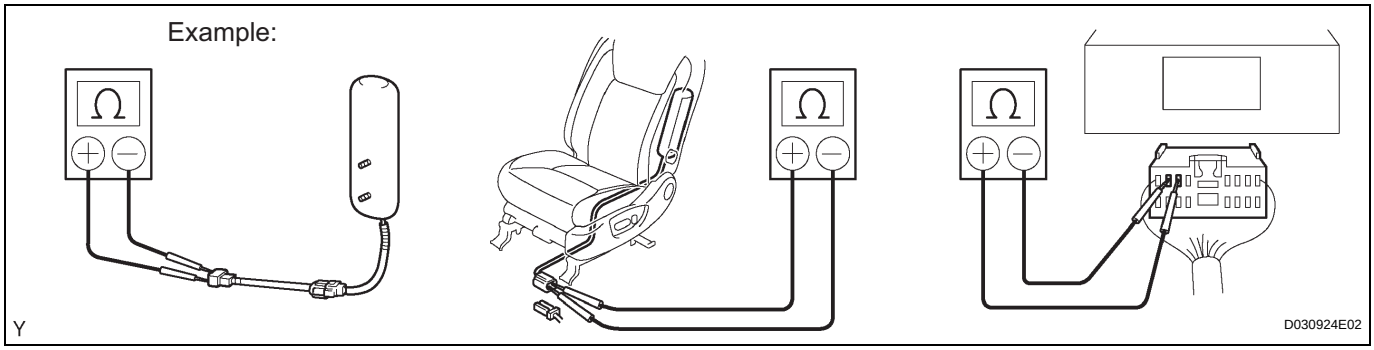

(3) Grease or detergents of any kind should not be applied to the front seat airbag assembly.

(4) Store the airbag assembly in an area where the ambient temperature is below 93°C (200°F), the humidity is not high and there is no electrical noise.

(5) When using electric welding anywhere on the vehicle, disconnect the airbag ECU connectors (2 pins). These connectors contain shorting springs. This feature reduces the possibility of the airbag deploying due to currents entering the squib wiring.

(6) When disposing of a vehicle or the airbag assembly unit by itself, the airbag should be deployed using SST before disposal. Activate the airbag in a safe place away from electrical noise.

(g) FRONT SEAT OUTER BELT ASSEMBLY WITH PRETENSIONER

(1) Never measure the resistance of the seat outer belt. This may cause the pretensioner of the seat belt to activate, which could cause serious injury.

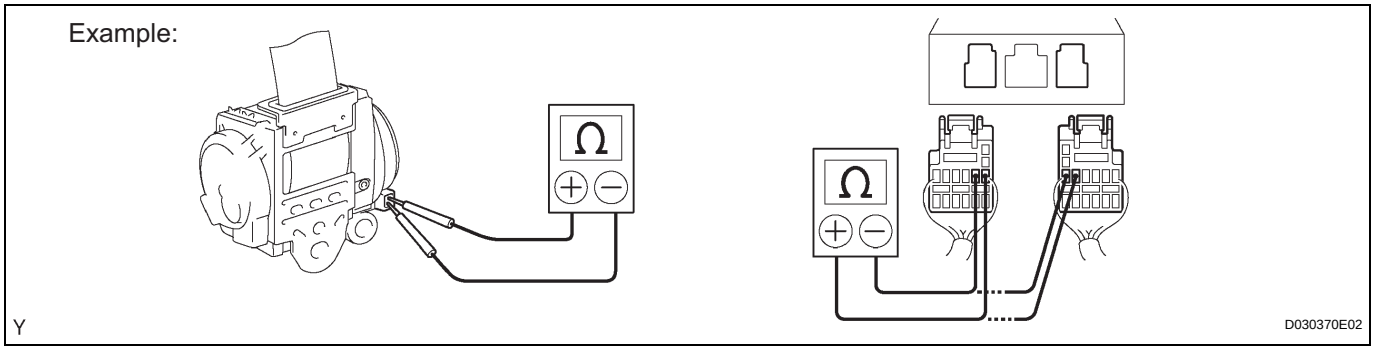

(2) Never disassemble the seat outer belt.

(3) Never install the seat outer belt on another vehicle.

(4) Store the seat outer belt in an area where the ambient temperature is below 80°C (176°F), the humidity is not high and there is no electrical noise.

(5) When using electric welding anywhere on the vehicle, disconnect the airbag ECU connectors (2 pins). These connectors contain shorting springs. This feature reduces the possibility of the pretensioner deploying due to currents entering the squib wiring.

(6) When disposing of a vehicle or the seat outer belt assembly by itself, the seat outer belt should be activated before disposal. Activate it in a safe place away from electrical noise.

(7) As the seat outer belt is hot after the pretensioner is activated, allow some time for it to cool down sufficiently before disposal. Never apply water to try to cool down the seat outer belt.

(8) Grease, detergents, oil or water should not be applied to the front seat outer belt.

(h) AIRBAG SENSOR ASSEMBLY

(1) Never reuse an airbag sensor assembly that has been involved in a collision where the SRS has deployed.

(2) The connectors to the airbag sensor assembly should be connected or disconnected with the sensor placed on the floor. If the connectors are connected or disconnected while the airbag sensor assembly is not placed on the floor, the SRS may activate.

(3) Work must be started at least 90 seconds after the ignition switch is turned OFF and the cable is disconnected from the negative (-) battery terminal, even if only loosening the set bolts of the airbag sensor assembly.

(i) WIRE HARNESS AND CONNECTOR
(1) The SRS wire harness is integrated with the instrument panel wire harness assembly. All the connectors in the system are a standard yellow color. If the SRS wire harness becomes disconnected or the connector becomes broken, repair or replace it.

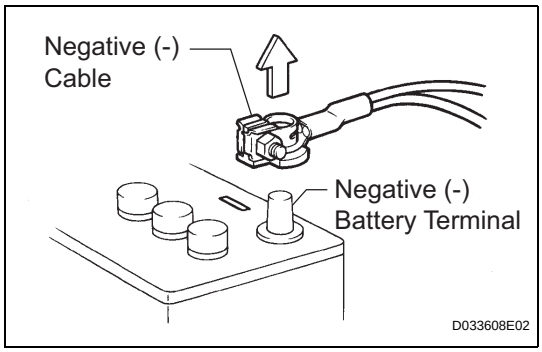

3. ELECTRONIC CONTROL

(a) REMOVAL AND INSTALLATION OF BATTERY TERMINAL

NOTICE:

Certain systems need to be initialized after disconnecting and reconnecting the cable from the negative (-) battery terminal.

(1) Before performing electronic work, disconnect the cable from the negative (-) battery terminal to prevent component and wire damage caused by accidental short circuits.
(2) When disconnecting the cable, turn the ignition switch off and the headlight dimmer switch OFF and loosen the cable nut completely. Perform these operations without twisting or prying the cable. Then disconnect the cable.
(3) Clock settings, radio settings, audio system memory, DTCs and other data are erased when the cable is disconnected from the negative (-) battery terminal. Write down any necessary data before disconnecting the cable.

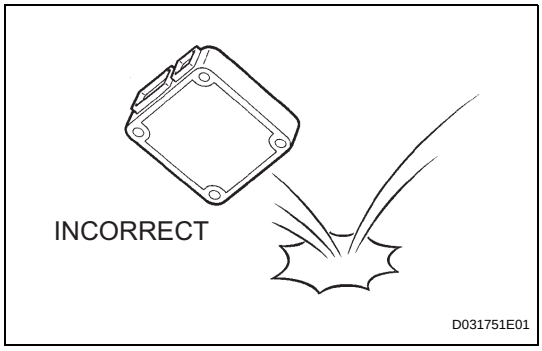

(b) HANDLING OF ELECTRONIC PARTS
(1) Do not open the cover or case of the ECU unless absolutely necessary. If the IC terminals are touched, the IC may be rendered inoperative by static electricity.
(2) Do not pull the wires when disconnecting electronic connectors. Pull the connector.
(3) Be careful not to drop electronic components, such as sensors or relays. If they are dropped on a hard surface, they should be replaced.
(4) When cleaning the engine with steam, protect the electronic components, air filter and emission-related components from water.
(5) Never use an impact wrench to remove or install temperature switches or temperature sensors.
(6) When measuring the resistance of a wire connector, insert the tester probe carefully to prevent terminals from bending.

4. REMOVAL AND INSTALLATION OF FUEL CONTROL PARTS

(a) PLACE FOR REMOVING AND INSTALLING FUEL SYSTEM PARTS
(1) Work in a location with good air ventilation that does not have welders, grinders, drills, electric motors, stoves, or any other ignition sources.

(2) Never work in a pit or near a pit as vaporized fuel will collect in those places.

(b) REMOVING AND INSTALLING FUEL SYSTEM PARTS

(1) Prepare a fire extinguisher before starting the operation.

(2) To prevent static electricity, install a ground wire to the fuel changer, vehicle and fuel tank, and do not spray the surrounding area with water. Be careful when performing work in this area, as the work surface will become slippery. Do not clean up gasoline spills with water, as this may cause the gasoline to spread, and possibly create a fire hazard.

(3) Avoid using electric motors, working lights and other electric equipment that can cause sparks or high temperatures.

(4) Avoid using iron hammers as they may create sparks.

(5) Dispose of fuel-contaminated cloth separately using a fire resistant container.

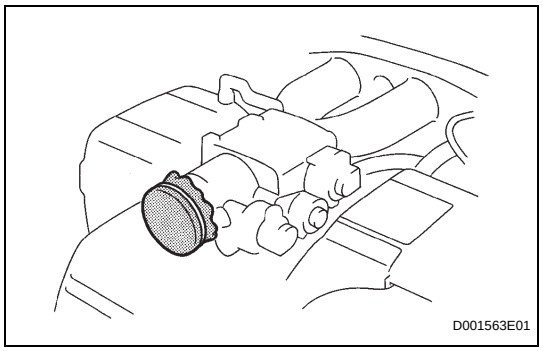

5. REMOVAL AND INSTALLATION OF ENGINE INTAKE PARTS

(a) If any metal particles enter inlet system parts, they may damage the engine.

(b) When removing and installing inlet system parts, cover the openings of the removed parts and engine openings. Use gummed tape or other suitable materials.

(c) When installing inlet system parts, check that no metal particles have entered the engine or the installed parts.

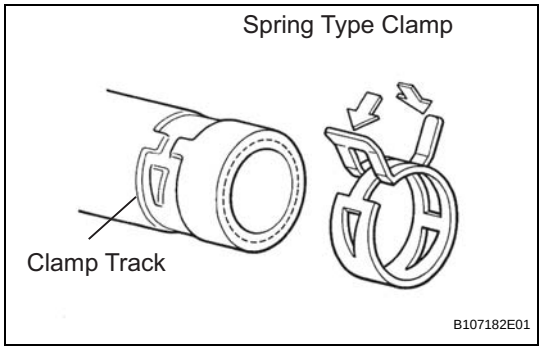

6. HANDLING OF HOSE CLAMPS

(a) Before removing the hose, check the clamp position so that it can be reinstalled in the same position.

(b) Replace any deformed or dented clamps with new ones.

(c) When reusing a hose, attach the clamp on the clamp track portion of the hose.

(d) For a spring type clamp, you may want to spread the tabs slightly after installation by pushing in the direction of the arrows as shown in the illustration.

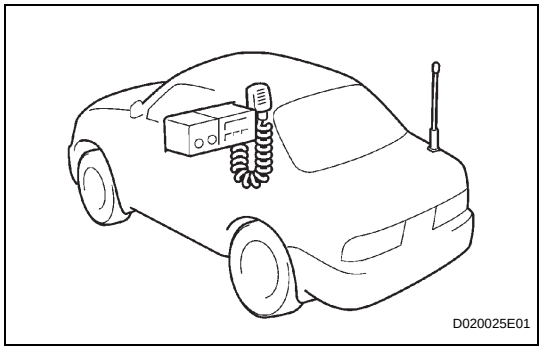

7. FOR VEHICLES EQUIPPED WITH MOBILE COMMUNICATION SYSTEMS

(a) Install the antenna as far away from the ECU and sensors of the vehicle electronic systems as possible.

(b) Install an antenna feeder at least 20 cm (7.87 in.) away from the ECU and sensors of the vehicle electronic systems. For details about ECU and sensor locations, refer to the section of the applicable components.

(c) Keep the antenna and feeder separate from other wiring as much as possible. This will prevent signals from the communication equipment from affecting vehicle equipment and vice versa.
(d) Check that the antenna and feeder are correctly adjusted.
(e) Do not install a high-powered mobile communication system.

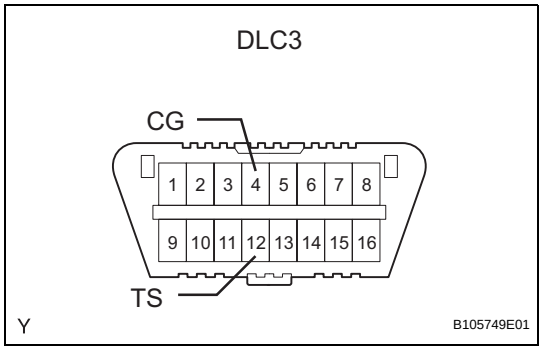

8. FOR VEHICLES EQUIPPED WITH TRACTION CONTROL (TRAC) SYSTEM

When testing with a 2-wheel drum tester such as a speedometer tester, a combination tester of the speedometer and brake, a chassis dynamometer, or when jacking up the front wheels and driving the wheels, always turn the TRAC system OFF.

(a) Confirm that the TRAC system is OFF.
  (1) Ignition switch to OFF.
  (2) Connect SST to terminals TS and CG of DLC3.
    NOTICE:
    Confirm that the VSC/TRAC warning light blinks.
(b) Begin testing.
(c) Disconnect SST from DLC3.

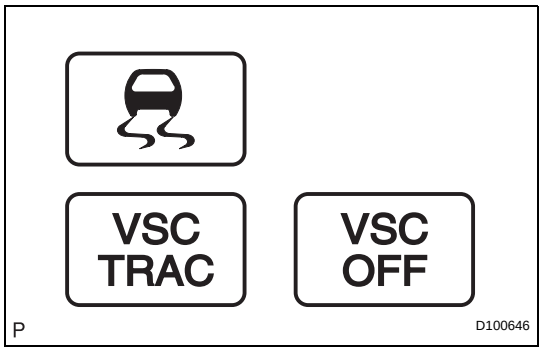

(d) Check that the VSC/TRAC warning light turns OFF.
  HINT:
  The SLIP indicator light blinks when the TRAC system is operating.

9. FOR VEHICLES EQUIPPED WITH VEHICLE STABILITY CONTROL (VSC) SYSTEM

(a) NOTICES WHEN USING DRUM TESTER
  (1) Before beginning testing, to disable the VSC, turn the ignition switch OFF and connect SST to terminals TS and CG of the DLC3.
    SST 09843-18040
    NOTICE:
    - **Confirm that the VSC warning light blinks.**
    - **VSC system will be reset when the engine is restarted.**
    - **For safety, secure the vehicle with restraint chains while using a wheel dynamometer.**
(b) NOTICES OF RELATED OPERATIONS TO VSC
  (1) Do not carry out unnecessary installation and removal as it might affect the adjustment of VSC related parts.
  (2) Be sure to follow the instructions for work preparation and final confirmation of proper operation of the VSC system.

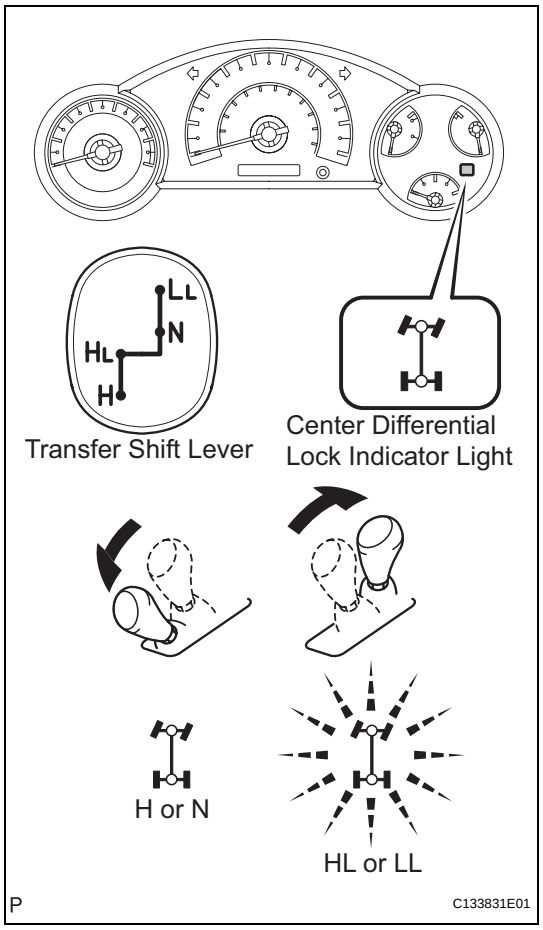

10. WHEN SERVICING FULL-TIME 4WD VEHICLES

The Full-time 4WD FJ CRUISER is equipped with a mechanical lock type center differential system. During tests using a brake tester or chassis dynamometer, such as braking force tests or speedometer tests, if only the front or rear wheels are to be rotated, it is necessary to set the position of the center differential to FREE or LOCK depending on the type of test being performed.

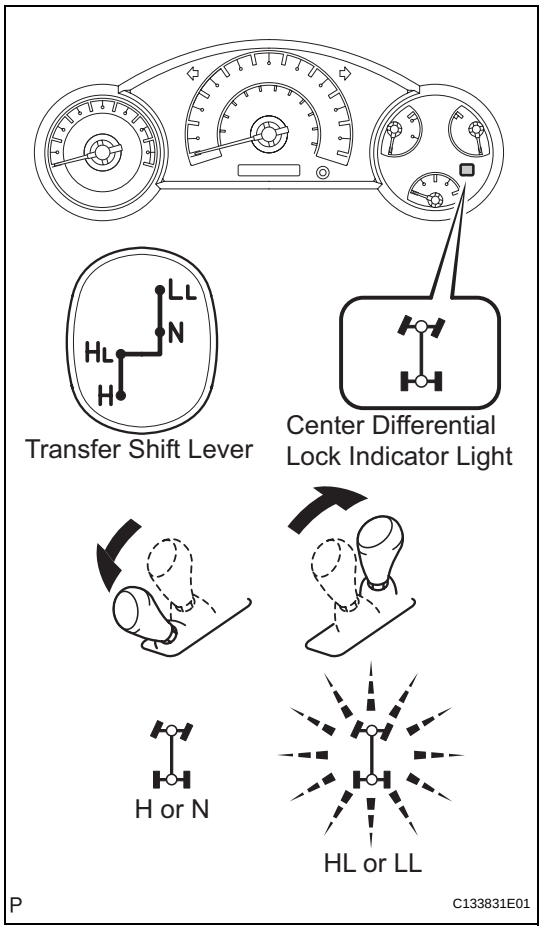

11. WHEN TESTING BRAKES, SPEEDOMETER, ETC.

(a) When carrying out any kind of servicing or testing on a Full-time 4WD in which the front or rear wheels are to be rotated (braking test, speedometer test), be sure to observe the precautions given below. Incorrect preparations or test procedures may cause danger as well as unsuccessful test results. Before starting any such servicing or test, be sure to check the following items:

- Center differential mode position (FREE or LOCK)

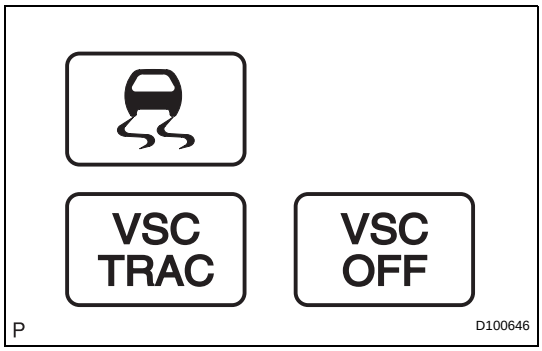

- Vehicle Stability Control (VSC) system:
  If the vehicle is equipped with the system, the slip indicator light, the VSC / TRAC indicator light and the VSC OFF indicator light come on with the ignition switch turned to ON. They will go off after about a few seconds.
- Whether wheels should be touching ground or jacked up
- Transmission gear position (N position)
- Transfer gear position (H or L position)
- Maximum testing vehicle speed
- Maximum testing time

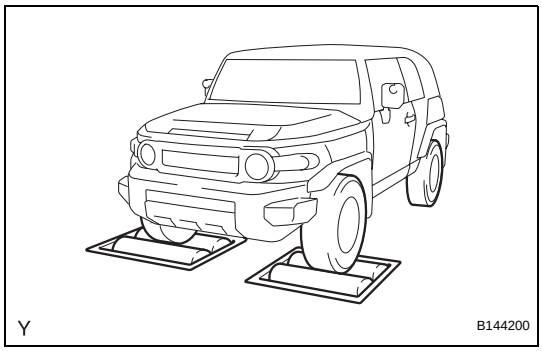

(b) Using Braking Tester:
Measure by low-speed type (Vehicle Speed: Below 0.5 km/h or 0.3 mph) brake tester and observe the following instructions before performing the test.
(1) Position the wheels to be tested (front or rear) on the tester.
(2) Put the center differential in the FREE position.
(3) If the vehicle is equipped with a Vehicle Stability Control (VSC) system, prohibit the system from activating (see previous step).
(4) Shift the transmission shift lever to the "N" position.
HINT:
Do not forget to change the Vehicle Stability Control (VSC) & Traction Control (TRAC) system to an operational condition after the test. Check that the VSC warning indicator light goes off when restarting the engine.

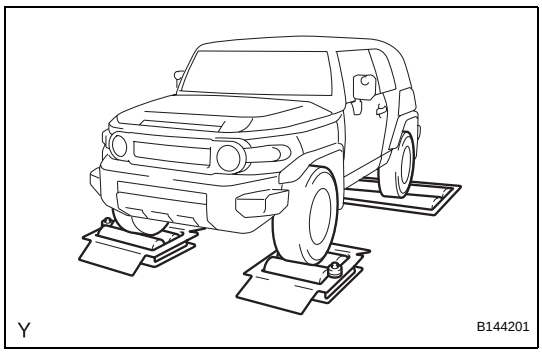

(c) Using Speedometer Tester:
Observe the following instructions and then test with the rear wheels.
(1) Position the rear wheels on the tester roller.
(2) Position the front wheels on the free roller or jack them up.
(3) Put the center differential in the FREE position.
(4) Deactivate the Vehicle Stability Control (VSC) & Traction Control (TRAC) system.
(5) Ensure that the vehicle does not move using chains.
HINT:
- Sudden shifting, braking, acceleration or deceleration is not allowed.
- Do not forget to change the Vehicle Stability Control (VSC) & Traction Control (TRAC) system to an operational condition after the test. Check that the VSC warning indicator light goes off when restarting the engine.

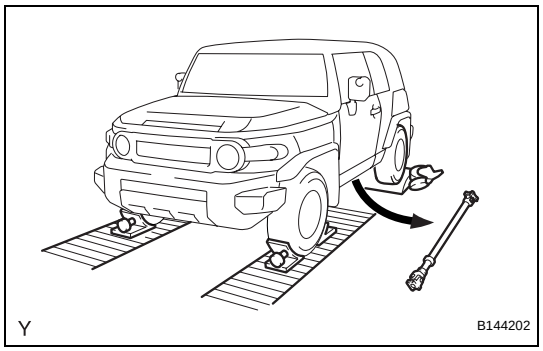

(d) Using Chassis Dynamometer:
Observe the following instructions and then measure with the rear wheels.
(1) Remove the front propeller shaft.
(2) Put the center differential in the LOCK position.
(3) Deactivate the Vehicle Stability Control (VSC) & Traction Control (TRAC) system.
(4) Ensure that the vehicle is securely fixed in place.
HINT:
- Sudden shifting, braking, acceleration or deceleration is not allowed.
- Do not forget to change the Vehicle Stability Control (VSC) & Traction Control (TRAC) system to an operational condition after the test. Check that the VSC warning indicator light goes off when restarting the engine.

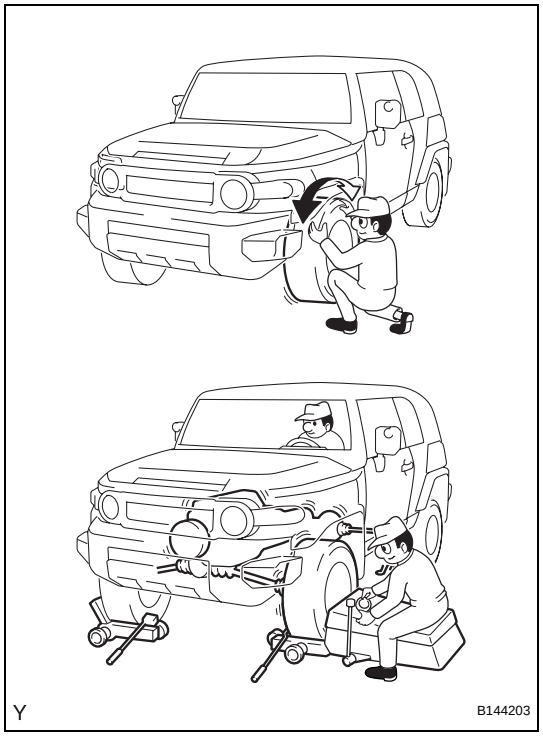

(e) On-Vehicle Wheel Balancing:
When doing on-vehicle wheel balancing on a full-time 4WD vehicle, to prevent each wheel from being rotated at a different speed and in different directions (which could damage the center differential), always be sure to observe the following precautions.
(1) All 4 wheels should be jacked up, lifted off of the ground completely.
(2) Put the center differential in the LOCK position.
(3) Deactivate the Vehicle Stability Control (VSC) & Traction Control (TRAC) system.
(4) The parking brake lever should be fully released.
(5) None of the brakes should be applied.
(6) The wheels should be driven on the wheel balancer with the engine running.
(7) Carry out the wheel balancing with the transmission in the D position.
HINT:
- When doing the wheel balancing, pay attention to the other wheels rotating at the same time.
- Sudden acceleration, deceleration or braking is not allowed.
- Do not forget to change the Vehicle Stability Control (VSC) & Traction Control (TRAC) system to an operational condition after the test. Check that the VSC warning indicator light goes off when restarting the engine.

12. WHEN TOWING FULL-TIME 4WD VEHICLES

- Use one of the methods shown below to tow the vehicle.
- If the vehicle has trouble in the chassis and drive train, use method 1 (flat bed truck).

IN

Towing Method	Parking Brake Condition	Transmission Shift Lever Position
1. Flat Bed Truck 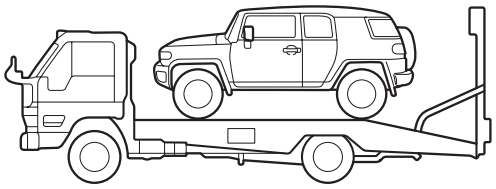 Y	Applied	Any Position
2. Wheel Lift Type Truck From Front 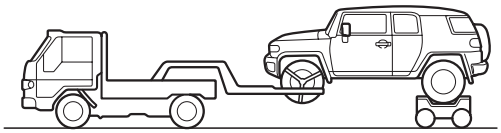 Y From Rear 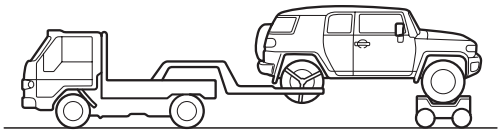 Y	Applied	

NOTICE:
Do not use any towing method other than those shown above.

- For example, the towing methods shown below are dangerous or may damage the vehicle, so do not use them.

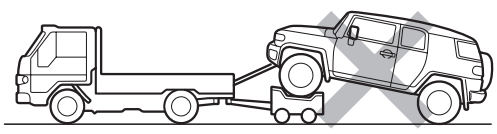 Y	• Never tow the vehicle using a method where the lifted-up wheel cannot rotate. • If this towing method is used, either from the front or rear: (a) There is a danger of the drive train heating up and causing breakdown, or of the wheels flying off the dolly. (b) In addition, if the vehicle is equipped with a Vehicle Stability Control (VSC) & Traction Control (TRAC) system, the system will apply the rotating wheels brake unless the engine isn't shut off.

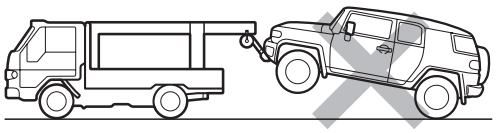 Y	Do not use the sling type method, either from the front or rear, as this method causes damage to the body.

13. FOR VEHICLES EQUIPPED WITH CATALYTIC CONVERTER

CAUTION:

If a large amount of unburned gasoline or gasoline vapors flow into the converter, it may cause overheating and create a fire hazard. To prevent this, observe the following precautions.

(a) Use only unleaded gasoline.
(b) Avoid idling the engine for more than 20 minutes.
(c) Avoid performing unnecessary spark jump tests.
  (1) Perform a spark jump test only when absolutely necessary. Perform this test as rapidly as possible.
  (2) While testing, never race the engine.
(d) Avoid a prolonged engine compression measurement. Engine compression measurements must be performed as rapidly as possible.
(e) Do not run the engine when the fuel tank is nearly empty. This may cause the engine to misfire and create an extra load on the converter.

VEHICLE LIFT AND SUPPORT LOCATIONS

1. NOTICE ABOUT VEHICLE CONDITION WHEN JACKING UP VEHICLE

(a) The vehicle must be unloaded before jacking up / lifting up the vehicle. Never jack up / lift up a heavily loaded vehicle.

(b) When removing heavy parts such as the engine and transmission, the center of gravity of the vehicle may shift. To stabilize the vehicle, place a balance weight in a location where it will not roll or shift, or use a mission jack to hold the jacking support.

2. NOTICE FOR USING 4 POST LIFT

(a) Follow the safety procedures outlined in the lift instruction manual.

(b) Use precautionary measures to prevent the free wheel beam from damaging tires or wheels.

(c) Use wheel chocks to secure the vehicle.

3. NOTICE FOR USING JACK AND SAFETY STAND

(a) Work on a level surface. Use wheel chocks at all times.

(b) Set the jack and rigid racks to the specified locations of the vehicle accurately.

(c) When jacking up the vehicle, first release the parking brake and move the shift lever to N.

(d) When jacking up the entire vehicle:

(1) When jacking up the front wheels first, make sure wheel chocks are behind the rear wheels.

(2) When jacking up the rear wheels first, make sure wheel chocks are in front of the front wheels.

(e) When jacking up only the front or rear wheels of the vehicle:

(1) Before jacking up the front wheels, place wheel chocks on both sides of the rear wheels.

(2) Before jacking up the rear wheels, place wheel chocks on both sides of the front wheels.

(f) When lowering a vehicle that only has its front or rear wheels jacked up:

(1) Before lowering the front wheels, make sure wheel chocks are in front of the rear wheels.

(2) Before lowering the rear wheels, make sure wheel chocks are behind the front wheels.

(g) It is extremely dangerous to perform any work on a vehicle raised on a jack alone, even for work that can be finished quickly. Rigid racks must be used to support the vehicle.

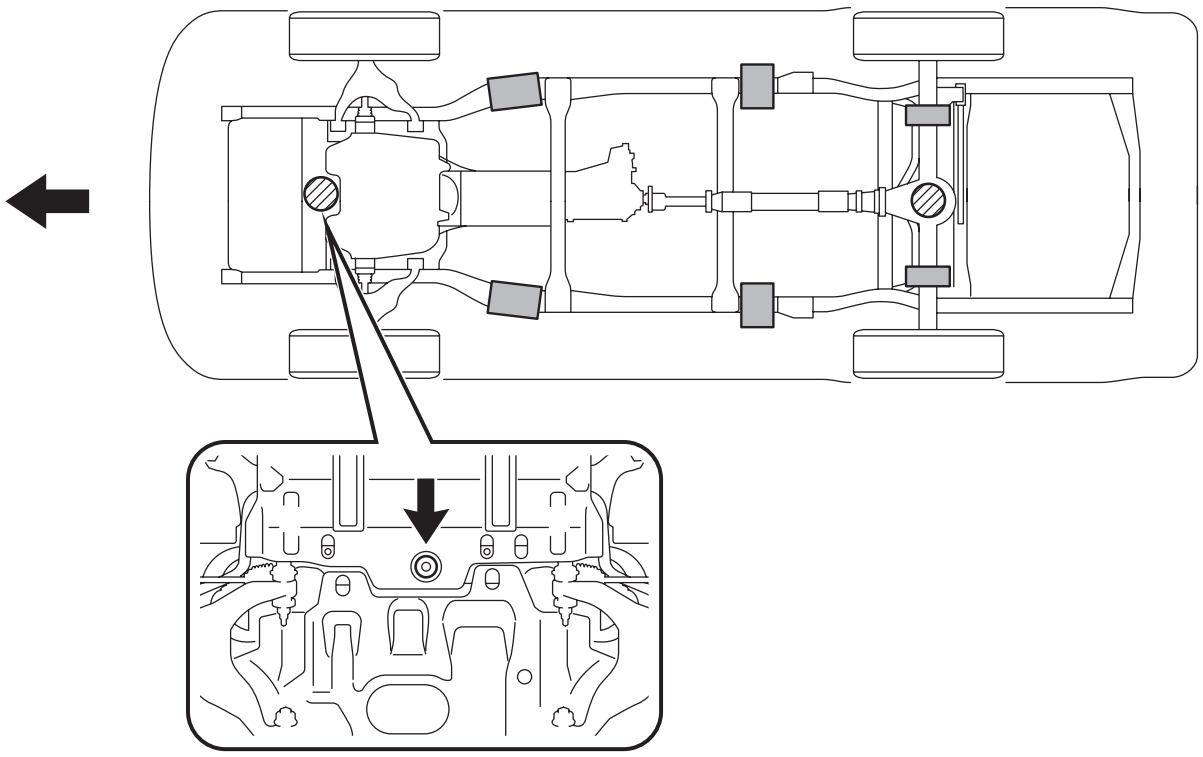

JACK POSITION

SUPPORT POSITION

Y

B144209E01

4. NOTICE FOR USING SWING ARM TYPE LIFT

(a) Follow safety procedures outlined in its instruction manual.

(b) Use a swing arm equipped with a rubber attachment.

(c) Set in the vehicle so as to make its center of gravity as close as possible to the center of the lift. (L becomes short.)

(d) Place the vehicle horizontally by adjusting the height of the cradle, and match the groove of the cradle and the safety stand support location accurately.

(e) Be sure to lock the swing arms before lifting and during work (if equipped with arm locks).

(f) Lift the vehicle up off the ground. Stand at a safe distance and shake the vehicle to check its stability.

Swing Arm Type Lift:

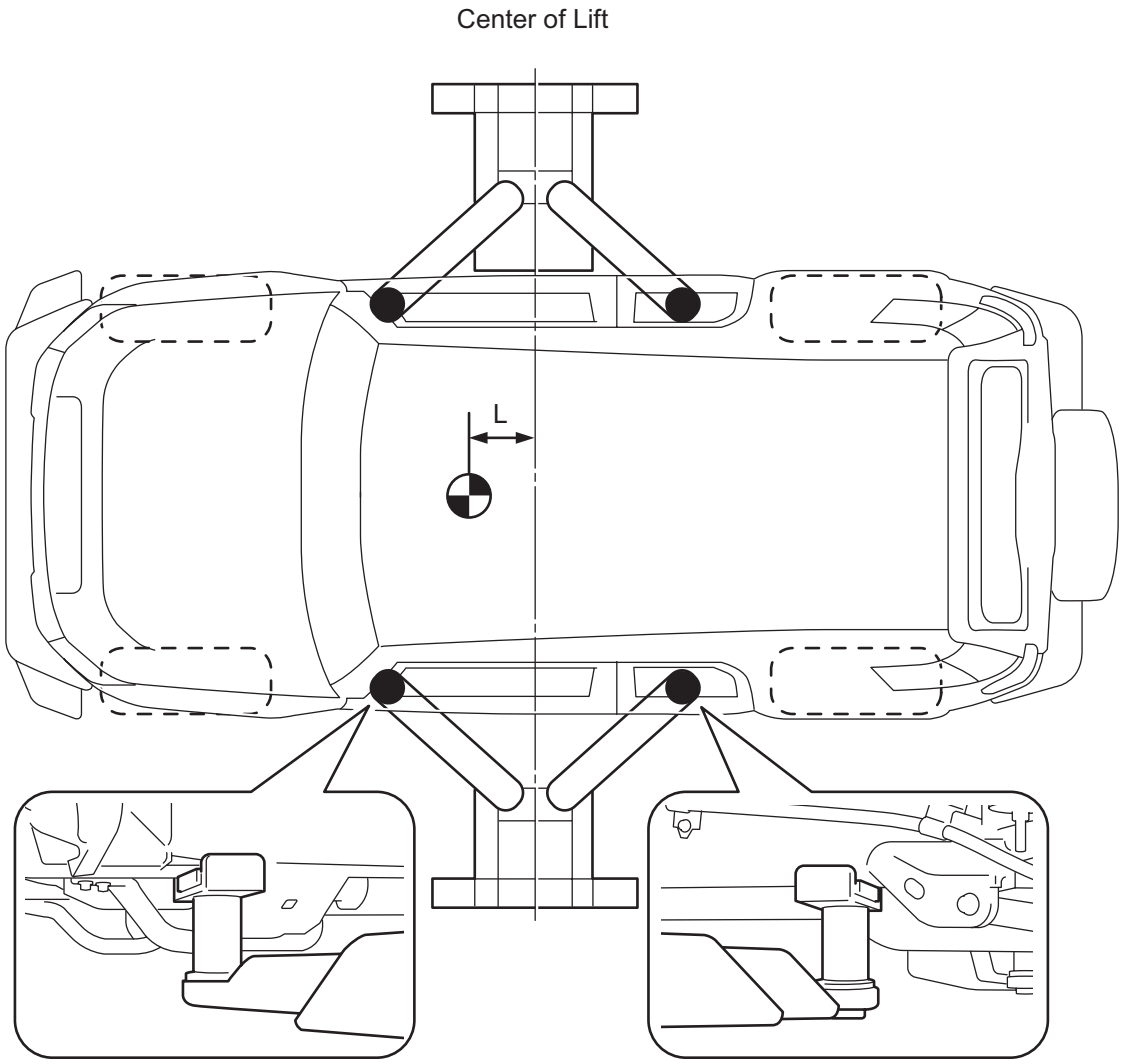

Y

B144198E01

IN

CUSTOMIZE PARAMETERS

HINT:
The following can be customized.
NOTICE:

- **When the customer requests a change in a function, first make sure that the function can be customized.**
- **Be sure to make a note of the current settings before customizing.**
- **When troubleshooting a function, first make sure that the function is set to the default setting.**

1. LIGHTING SYSTEM

Illuminated Entry

Display (Item)	Default	Contents	Setting
LIGHTING TIME (Lighting Time)	15 (second)	Changes illumination duration after door closure. (It will quickly fade out in case of turning the ignition switch ON)	7.5/ 15/ 30 (second)
/L ON / UNLOCK (Room light illuminates when door key unlocked.)	ON	Function to light up the room light, when unlocking with the door key cylinder. (Room light illuminated when interior light switch in DOOR position)	ON / OFF
I/L ON/ACC OFF (Room light illuminates when ignition switch turned off)	ON	Illuminates light when ignition switch turned on (ACC). (Room light illuminated when interior light switch in DOOR position)	ON / OFF

HINT:
Sensitivity adjustments are difficult to confirm. Check by driving the customer's vehicle.

2. POWER DOOR LOCK CONTROL SYSTEM

Power Door Lock Control System

Display (Item)	Default	Contents	Setting
UNLK/KEY TWICE	ON	Unlocks only driver side door when driver side door key cylinder turned to unlock once, and unlocks all doors when turned to unlock twice. For OFF setting, turning it once unlocks all doors.	ON / OFF

3. WIRELESS DOOR LOCK CONTROL SYSTEM

Wireless Door Lock Control System

Display (Item)	Default	Contents	Setting
HAZARD ANS BACK	ON	When wireless lock switch on transmitter pressed, illuminates all hazard warning lights once. When unlock switch pressed, all hazard warning lights illuminate twice	ON / OFF
WIRELESS OPER	ON	ON /OFF of wireless door lock function	ON / OFF
ALARM FUNCTION	ON	Operates security alarm when panic switch on transmitter continuously pressed for 1 second	ON / OFF

Display (Item)	Default	Contents	Setting
UNLOCK/2 OPER	ON	Function that unlocks driver side door when unlock switch on transmitter is pressed once, and unlocks all doors when pressed twice. If setting is OFF, pressing unlock switch once makes all doors unlock..	ON / OFF
AUTO LOCK DELAY	30 seconds	Time until relocking after unlocking with wireless door lock function	60 seconds / 30 seconds
OPEN DOOR WARN	ON	If a door is not completely closed and LOCK is pressed, this function sounds a buzzer for 10 seconds	ON / OFF
WIRELS BUZZ VOL	MID2	To adjust the volume of the wireless buzzer	OFF / MIN / MID1/ MID2 /MID3 / MAX

INITIALIZATION

The initialization procedures are below the table.

System Name
Meter / Gauge System

1. DESCRIPTION

NOTICE:

Do not place magnetic or metal objects on or near the accessory meter.

HINT:

The procedures described below are for vehicles equipped with an accessory meter.

(a) The location of magnetic north differs depending on the vehicle location. Adjustment of the compass' magnetism is required to correct possible compass deviations from true north.

(b) Compass function calibration is necessary when: 1) purchasing a vehicle; 2) disconnecting and reconnecting the cable of the negative (-) battery terminal; 3) replacing the vehicle battery; 4) driving the vehicle outside the set zone (see the zone map below); or 5) placing magnetic or metal objects near the accessory meter (the direction indication on the display blinks).

2. PERFORM CALIBRATION

CAUTION:

- **Strictly observe posted speed limits, traffic laws and road conditions.**
- **Make sure no people are near the vehicle.**

NOTICE:

- **Perform the circling calibration in a spacious area that does not have artificial magnetic influence. Calibration cannot be performed in underground parking lots, areas under steel towers and areas between tall buildings.**
- **When performing the calibration, do not operate the air conditioner, power windows, or any other electrical system.**
- **The compass may become magnetized during shipping by vessels or freight cars. Be sure to calibrate the compass by correctly performing the procedure described below. If the calibration cannot be completed despite the vehicle being driven in a circle several times, the vehicle's magnetic field may be interfering with the calibration. Demagnetize the vehicle using a demagnetizer and perform calibration again.**

Accessory Meter:

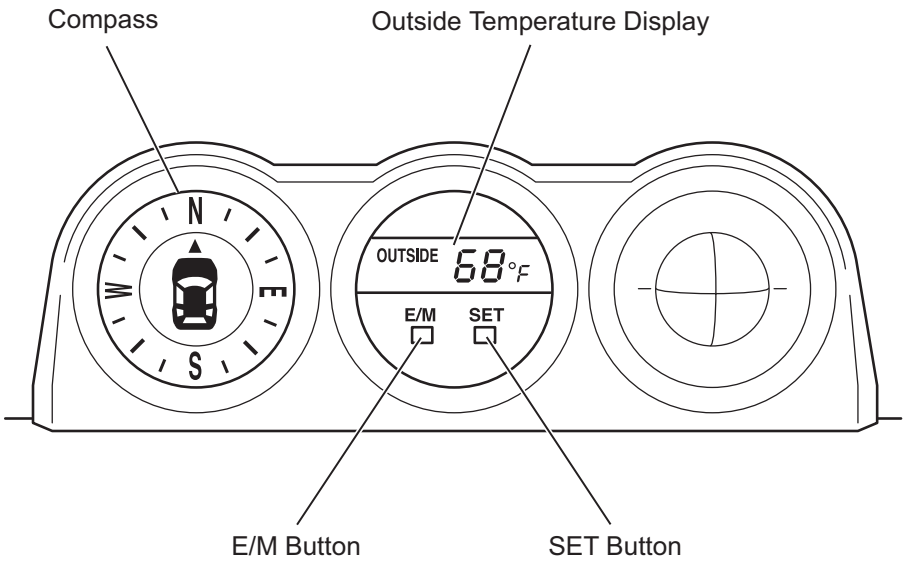

(a) DEVIATION CALIBRATION PROCEDURE:

(1) Turn the ignition switch ON.

HINT:

When the initial circling calibration has not yet been performed, the COMPASS indicator in the outside temperature display blinks.

(2) Switch the mode to compass correction mode by pushing the SET button for about 2 seconds, until the zone number appears in the outside temperature display.

HINT:

If no button operations occur for more than 6 seconds while in compass correction mode, the calibration is cancelled and the display returns to the outside temperature indication. To restart, perform the procedure from the first step again.

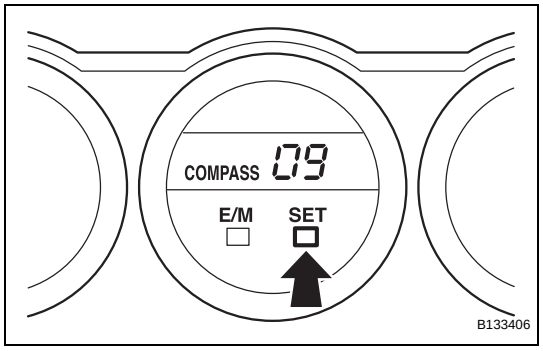

(3) Refer to the following map to determine the vehicle location and select the relevant zone number by pushing the E/M button.

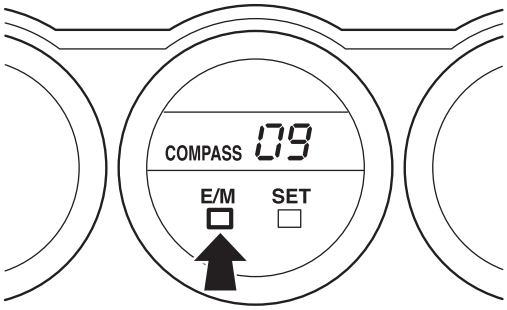

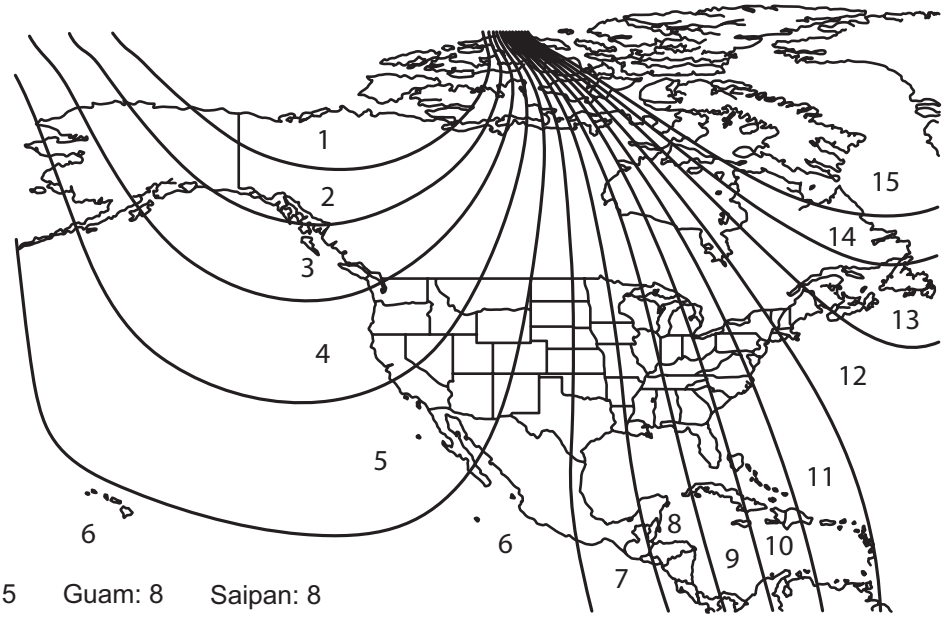

A. Samoa: 5 Guam: 8 Saipan: 8

B145641E01

HINT:
After DEVIATION CALIBRATION, leave the system for 6 seconds or push and hold the SET button for about 2 seconds. The display returns to the outside temperature display.

(b) CIRCLING CALIBRATION PROCEDURE:
(1) Start the engine.
HINT:
When the initial circling calibration has not yet been performed, the COMPASS indicator in the outside temperature display blinks.

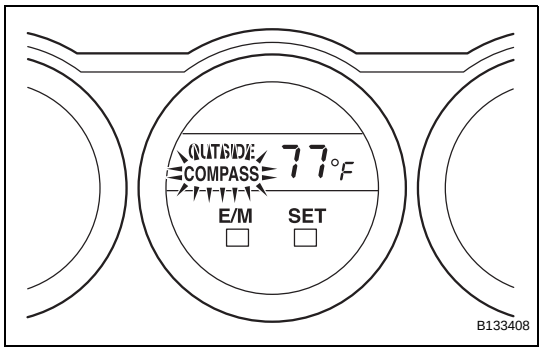

B133408

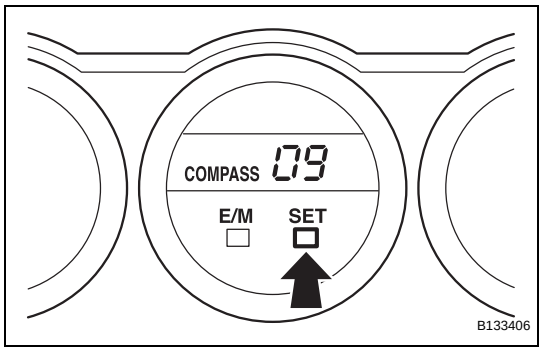

(2) Switch the mode to compass correction mode by pushing the SET button for about 2 seconds, until the zone number appears in the outside temperature display.
HINT:
If no button operations occur for more than 6 seconds while in compass correction mode, calibration is cancelled and the display returns to the outside temperature indication. To restart, perform the procedure from the first step again.

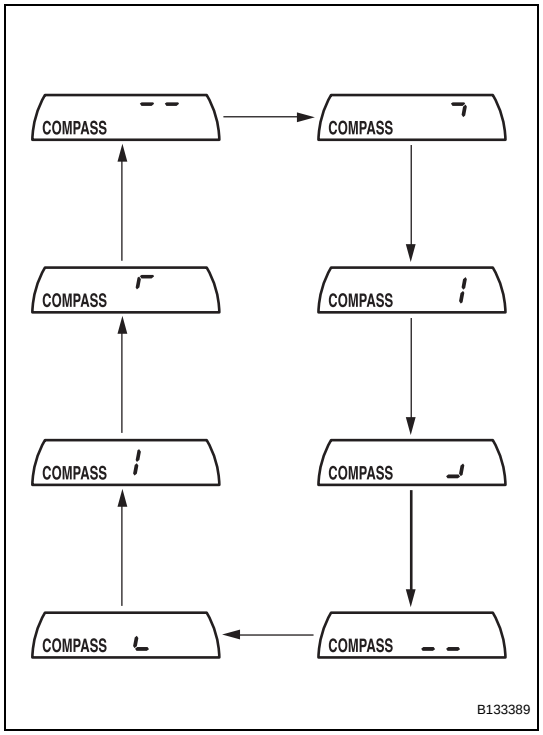

(3) Push the SET button again to change the mode to turn correction mode.
HINT:
While in correction mode, the indication bars move as shown in the illustration.

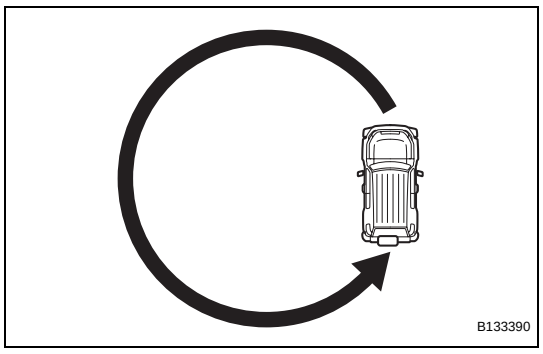

(4) If there is sufficient space to drive the vehicle in a circle, perform the following procedure:
1. Drive the vehicle in a full circle within 2 minutes, at a vehicle speed of 5 mph (8 km/h) or lower, as shown in the illustration.

NOTICE:

- **Do not perform the circling calibration of the compass in a place where the earth's magnetic field is subject to interference by artificial magnetic fields (underground parking, under a steel tower, between buildings, roof parking, near a crossing, near a large vehicle, etc.).**
- **During the calibration, do not operate any electric systems (power window, etc.) as they may interfere with the calibration.**

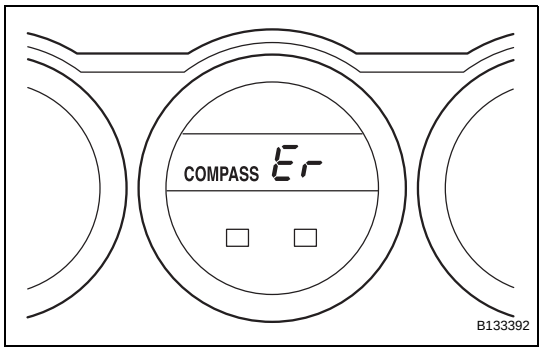

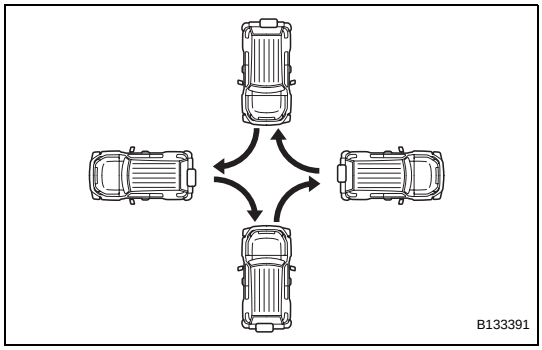

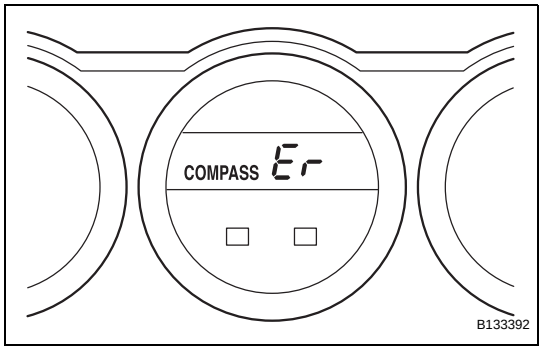

HINT:

- When the compass display returns to the outside temperature display, the calibration is complete.
- When the circling calibration fails, "Er" is displayed for about 2 seconds and then the COMPASS indicator flashes.
- If the correct direction is not displayed after driving the vehicle as specified, change the vehicle location.
- To cancel the calibration before completion, push the SET button for about 2 seconds.

(5) If enough space is not available to drive in a circle, perform the following:

1. Perform a four-point turn within 2 minutes, as shown in the illustration.

NOTICE:

- **Do not perform the circling calibration of the compass in a place where the earth's magnetic field is subject to interference by artificial magnetic fields (underground parking, under a steel tower, between buildings, roof parking, near a crossing, near a large vehicle, etc.).**
- **During the calibration, do not operate any electric systems (power window, etc.) as they may interfere with the calibration.**

HINT:

- When the compass display returns to the outside temperature display, the calibration is complete.
- When the circling calibration fails, "Er" is displayed for about 2 seconds and then the COMPASS indicator flashes.
- If the correct direction is not displayed after driving the vehicle as specified, change the vehicle location.
- To cancel the calibration before completion, push the SET button for about 2 seconds.

(6) Check that the COMPASS indicator is not blinking and that the compass is displayed normally.

IN

HOW TO TROUBLESHOOT ECU CONTROLLED SYSTEMS

GENERAL INFORMATION

A large number of ECU controlled systems are used in the FJ CRUISER. In general, ECU controlled systems are considered to be very intricate, requiring a high level of technical knowledge to troubleshoot. However, most problem checking procedures only involve inspecting the ECU controlled system's circuits one by one. An adequate understanding of the system and a basic knowledge of electricity is enough to perform effective troubleshooting, accurate diagnoses and necessary repairs.

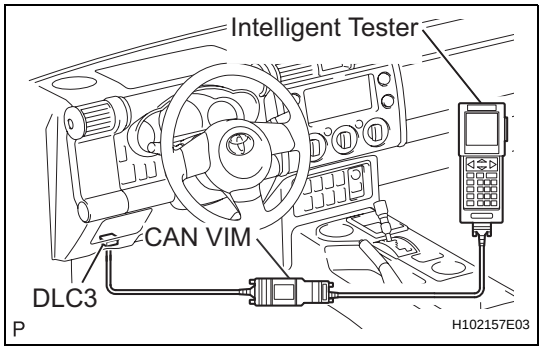

FOR USING INTELLIGENT TESTER

Connect the cable of the intelligent tester (with CAN VIM) to the DLC3, turn the ignition switch ON and attempt to use the tester. If the display indicates that a communication error has occurred, there is a problem either with the vehicle or with the tester.

* If communication is normal when the tester is connected to another vehicle, inspect the DLC3 of the original vehicle.
* If communication is still not possible when the tester is connected to another vehicle, the problem may be in the tester itself. Consult the Service Department listed in the tester's instruction manual.

HOW TO PROCEED WITH TROUBLESHOOTING

1. OPERATION FLOW

HINT:
Perform troubleshooting in accordance with the procedures below. The following is an outline of basic troubleshooting procedures. Confirm the troubleshooting procedures for the circuit you are working on before beginning troubleshooting.

1 VEHICLE BROUGHT TO WORKSHOP

NEXT

2 CUSTOMER PROBLEM ANALYSIS

(a) Ask the customer about the conditions and environment when the problem occurred.

NEXT

3 INSPECT BATTERY VOLTAGE

Standard voltage:
11 to 14 V
If the voltage is below 11 V, recharge or replace the battery before proceeding.

NEXT

4 SYMPTOM CONFIRMATION AND DTC (AND FREEZE FRAME DATA) CHECK

(a) Visually check the wire harnesses, connectors and fuses for open and short circuits.
(b) Warm up the engine to the normal operating temperature.
(c) Confirm the problem symptoms and conditions, and check for DTCs.

Result

Result	Proceed to
DTC is output	A
DTC is not output	B

B → **Go to step 6**

A

5	DTC CHART

(a) Check the results obtained in "SYMPTOM CONFIRMATION AND DTC (AND FREEZE FRAME DATA) CHECK". Then find the output DTC in the DTC chart. Look at the "Trouble Area" column for a list of potentially malfunctioning circuits and / or parts.

NEXT → **Go to step 7**

6	PROBLEM SYMPTOMS CHART

(a) Check the results obtained in "SYMPTOM CONFIRMATION AND DTC (AND FREEZE FRAME DATA) CHECK". Then find the problem symptoms in the problem symptoms table. Look at the "Suspected Area" column for a list of potentially malfunctioning circuits and / or parts.

NEXT

7	CIRCUIT INSPECTION OR PARTS INSPECTION

(a) Confirm the malfunctioning circuit or part.

NEXT

8	ADJUST, REPAIR OR REPLACE

(a) Adjust, repair or replace the malfunctioning circuit or parts.

NEXT

9	CONFIRMATION TEST

(a) After the adjustment, repairs or replacement, confirm that the malfunction no longer exists. If the malfunction does not reoccur, perform a confirmation test under the same conditions and in the same environment as when the malfunction occurred the first time.

NEXT

END

2. CUSTOMER PROBLEM ANALYSIS

HINT:

- In troubleshooting, confirm that the problem symptoms have been accurately identified. Preconceptions should be discarded in order to make an accurate judgment. To clearly understand what the problem symptoms are, it is extremely important to ask the customer about the problem and the conditions at the time the malfunction occurred.
- Gather as much information as possible for reference. Past problems that seem unrelated may also help in some cases.
- The following 5 items are important points in the problem analysis:

What	Vehicle model, system name
When	Date, time, occurrence frequency
Where	Road conditions
Under what conditions?	Running conditions, driving conditions, weather conditions
How did it happen?	Problem symptoms

3. SYMPTOM CONFIRMATION AND DIAGNOSTIC TROUBLE CODE

HINT:

The diagnostic system in the FJ CRUISER has various functions.

- The first function is the Diagnostic Trouble Code (DTC) check. A DTC is a code stored in the ECU memory whenever a malfunction in the signal circuits to the ECU occurs. In a DTC check, a previous malfunction's DTC can be checked by a technician during troubleshooting.
- Another function is the Input Signal Check, which checks if the signals from various switches are sent to the ECU correctly.

  By using these functions, the problem areas can be narrowed down and troubleshooting is more effective. Diagnostic functions are incorporated in the following system in the FJ CRUISER.

System	DTC Check (Normal Mode)	DTC Check (Check Mode)	Freeze-frame Data	Sensor Check / Test Mode (Input Signal Check)	Data List	Active Test	Customize Parameter
1GR-FE SFI SYSTEM	○	○	○	-	○	○	-
A750E AUTOMATIC TRANSAXLE SYSTEM	○	○	-	-	○	○	-
A750F AUTOMATIC TRANSAXLE SYSTEM	○	○	-	-	○	○	-
VEHICLE STABILITY CONTROL SYSTEM	○	-	○	○	○	○	-
AIRBAG SYSTEM	○	○	-	-	○	-	-

System	DTC Check (Normal Mode)	DTC Check (Check Mode)	Freeze-frame Data	Sensor Check / Test Mode (Input Signal Check)	Data List	Active Test	Customize Parameter
OCCUPANT CLASSIFICATION SYSTEM	○	-	-	-	○	-	-
CRUISE CONTROL SYSTEM	○	-	-	-	○	-	-
MULTIPLEX COMMUNICATION	○	-	-	-	-	-	-
CAN COMMUNICATION SYSTEM	○	-	-	-	-	-	-

- In the DTC check, it is very important to determine whether the problem indicated by the DTC is either: 1) still occurring, or 2) occurred in the past but has since returned to normal. In addition, the DTC should be compared to the problem symptom to see if they are related. For this reason, DTCs should be checked before and after confirmation of symptoms (i.e., whether or not problem symptoms exist) to determine current system conditions, as shown in the flowchart below.
- Never skip the DTC check. Failing to check DTCs may, depending on the case, result in unnecessary troubleshooting for systems operating normally or lead to repairs not related to the problem. Follow the procedures listed in the flowchart in the correct order.
- The following flowchart shows how to proceed with troubleshooting using the DTC check. Directions from the flowchart will indicate how to proceed either to DTC troubleshooting or to the troubleshooting of each problem symptom.

1	DTC CHECK

NEXT

2	MAKE A NOTE OF DTCS DISPLAYED AND THEN CLEAR MEMORY

NEXT

3	SYMPTOM CONFIRMATION

Result

Result	Proceed to
No symptoms exist	A
Symptoms exist	B

B → Go to step 5

A

4	SIMULATION TEST USING SYMPTOM SIMULATION METHODS

NEXT

5	DTC CHECK

Result

Result	Proceed to
DTC is not output	A
DTC is output	B

B → TROUBLESHOOTING OF PROBLEM INDICATED BY DTC

A

6	SYMPTOM CONFIRMATION

Result

Result	Proceed to
Symptoms exist	A
No symptoms exist	B

If a DTC was displayed in the initial DTC check, the problem may have occurred in a wire harness or connector in that circuit in the past. Check the wire harness and connectors.

B → SYSTEM NORMAL

A

TROUBLESHOOTING OF EACH PROBLEM SYMPTOM

The problem is still occurring in a place other than the diagnostic circuit (the DTC displayed first is either for a past problem or a secondary problem).

4. SYMPTOM SIMULATION

HINT:

The most difficult case in troubleshooting is when no problem symptoms occur. In such a case, a thorough problem analysis must be carried out. A simulation of the same or similar conditions and environment in which the problem occurred in the customer's vehicle should be carried out. No matter how much skill or experience a technician has, troubleshooting without confirming the problem symptoms will lead to important repairs being overlooked and mistakes or delays.

IN

For example:

With a problem that only occurs when the engine is cold or as a result of vibration caused by the road during driving, the problem can never be determined if the symptoms are being checked on a stationary vehicle or on a vehicle with a warmed-up engine. Vibration, heat or water penetration (moisture) is difficult to reproduce. The symptom simulation tests below are effective substitutes for the conditions and can be applied on a stationary vehicle. Important points in the symptom simulation test:

In the symptom simulation test, the problem symptoms as well as the problem area or parts must be confirmed. First, narrow down the possible problem circuits according to the symptoms. Then, connect the tester and carry out the symptom simulation test, judging whether the circuit being tested is defective or normal. Also, confirm the problem symptoms at the same time. Refer to the problem symptoms table for each system to narrow down the possible causes.

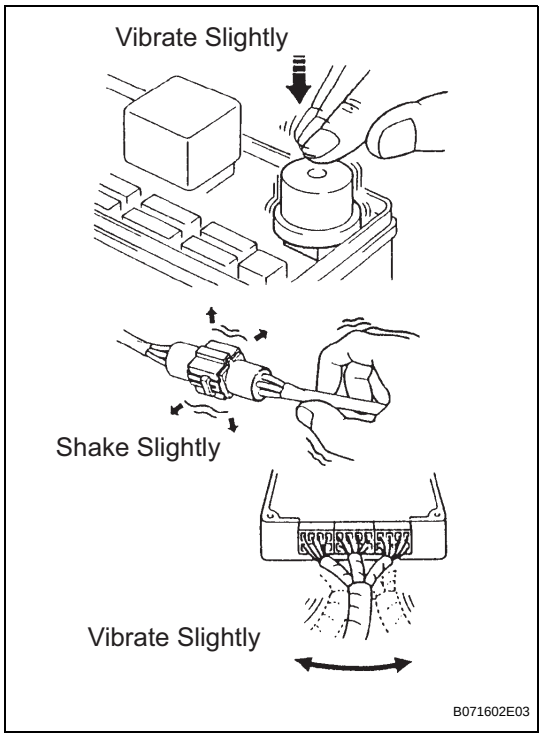

(a) VIBRATION METHOD:
When a malfunction seems to occur as a result of vibration.
(1) PART AND SENSOR
Apply slight vibration with a finger to the part of the sensor suspected to be the cause of the problem, and check whether or not the malfunction occurs.
NOTICE:
Applying strong vibration to relays may open them.
(2) CONNECTORS
Slightly shake the connector vertically and horizontally.
(3) WIRE HARNESS
Slightly shake the wire harness vertically and horizontally.
HINT:
The connector joint and fulcrum of the vibration are the major areas that should be checked thoroughly.

(b) HEAT METHOD:
When a malfunction seems to occur when the area in question is heated.
(1) Heat the component that is the possible cause of the malfunction with a hair dryer or similar device. Check if the malfunction occurs.
NOTICE:
- **Do not heat to more than 60°C (140°F). Exceeding this temperature may damage components.**

- **Do not apply heat directly to the parts in the ECU.**

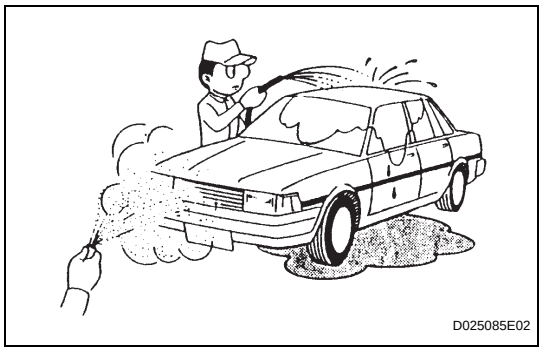

(c) WATER SPRINKLING METHOD:
When a malfunction seems to occur on a rainy day or in high-humidity.
(1) Sprinkle water onto the vehicle and check if the malfunction occurs.
NOTICE:
- **Never sprinkle water directly into the engine compartment. Indirectly change the temperature and humidity by spraying water onto the front of the radiator.**
- **Never apply water directly onto the electronic components.**

HINT:
If the vehicle has or had a water leakage problem, the leakage may have damaged the ECU or connections. Look for evidence of corrosion or short circuits. Proceed with caution during water tests.

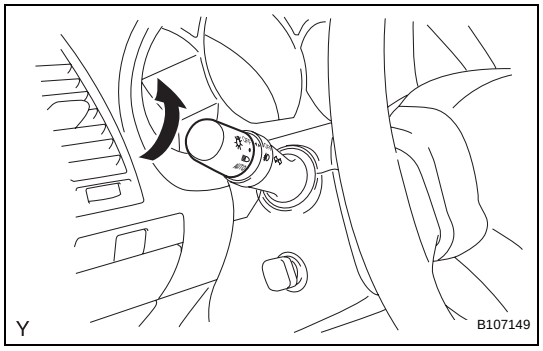

(d) HIGH ELECTRICAL LOAD METHOD:
When a malfunction seems to occur when electrical load is excessive.
(1) Turn on the heater blower, headlight, rear window defogger and all other electrical loads. Check if the malfunction reoccurs.

5. DIAGNOSTIC TROUBLE CODE CHART

Look for output Diagnostic Trouble Codes (DTCs) (from the DTC checks) in the appropriate section's Diagnostic Trouble Code Chart. Use the chart to determine the trouble area and the proper inspection procedure. A description of each of the chart's columns are below.

Item	Description
DTC No.	Indicates the diagnostic trouble code
Detection Item	Indicates the system or details of the problem
Trouble Area	Indicates the suspect areas of the problem
See Page	Indicates the page where the inspection procedures for each circuit is to be found, or gives instruction for checking and repairs.

6. PROBLEM SYMPTOMS TABLE

When a "Normal" code is output during a DTC check but the problem is still occurring, use the Problem Symptoms Table. The suspected areas (circuits or parts) for each problem symptom are in the table. The suspected areas are listed in order of probability. A description of each of the chart's columns are below.

HINT:
In some cases, the problem is not detected by the diagnostic system even though a problem symptom is present. It is possible that the problem is occurring outside the detection range of the diagnostic system, or that the problem is occurring in a completely different system.

Item	Description
Problem Symptom	-
Circuit Inspection, Inspection Order	Indicates the order in which the circuits need to be checked
Circuit or Part Name	Indicates the circuit or part which needs to be checked
See Page	Indicates the page where the flowchart for each circuit is located

7. CIRCUIT INSPECTION

A description of the main areas of each circuit inspection is below.

Item	Description
Circuit Description	The major role, operation of the circuit and its component parts are explained.
Diagnostic Trouble Code No. and Detection Item	Indicates the diagnostic trouble codes, diagnostic trouble code settings and suspected areas for a problem
Wiring Diagram	This shows a wiring diagram of the circuit. Use this diagram together with ELECTRICAL WIRING DIAGRAM to thoroughly understand the circuit. Wire colors are indicated by an alphabetical code: • B = Black • L = Blue • R = Red • BR = Brown • LG = Light Green • V = Violet • G = Green • O = Orange • W = White • GR = Gray • P = Pink • Y = Yellow • SB = Sky Blue The first letter indicates the basic wire color and the second letter indicates the color of the stripe.
Inspection Procedures	Use the inspection procedures to determine if the circuit is normal or abnormal. If abnormal, use the inspection procedures to determine whether the problem is located in the sensors, actuators, wire harnesses or ECU.
Indicates the condition of the connector of the ECU during the check	Connector being checked is connected. Connections of tester are indicated by (+) or (-) after the terminal name. Connector being checked is disconnected. For illustrations of inspections between a connector and body ground, information about the body ground is not shown in the illustration.

ELECTRONIC CIRCUIT INSPECTION PROCEDURE

1. BASIC INSPECTION

(a) WHEN MEASURING RESISTANCE OF ELECTRONIC PARTS

(1) Unless otherwise stated, all resistance measurements should be made at an ambient temperature of 20°C (68°F). Resistance measurements may be inaccurate if measured at high temperatures, i.e. immediately after the vehicle has been running. Measurements should be made after the engine has cooled down.

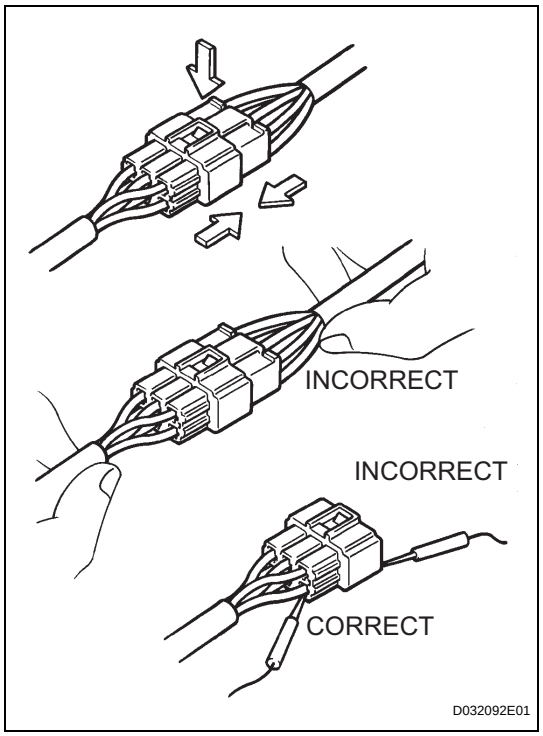

(b) HANDLING CONNECTORS

(1) When disconnecting a connector, first squeeze the mating halves tightly together to release the lock, and then press the lock claw and separate the connector.

(2) When disconnecting a connector, do not pull on the harnesses. Grasp the connector directly and separate it.

(3) Before connecting a connector, check that there are no deformed, damaged, loose or missing terminals.

(4) When connecting a connector, press firmly until it locks with a "click" sound.

(5) If checking a connector with a TOYOTA electrical tester, check the connector from the backside (harness side) using a mini test lead.
NOTICE:
- **As a waterproof connector cannot be checked from the backside, check it by connecting a sub-harness.**
- **Do not damage the terminals by moving the inserted tester needle.**

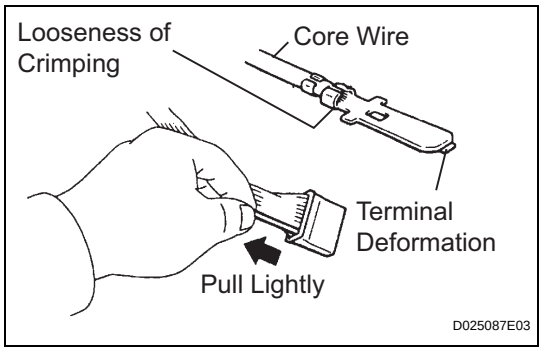

(c) CHECKING CONNECTORS

(1) Checking when a connector is disconnected: Squeeze the connector together to confirm that they are fully connected and locked.

(2) Checking when a connector is disconnected: Check by pulling the wire harness lightly from the backside of the connector. Look for unlatched terminals, missing terminals, loose crimps or broken conductor wires. Check visually for corrosion, metallic or foreign matter and water, and bent, rusted, overheated, contaminated, or deformed terminals.

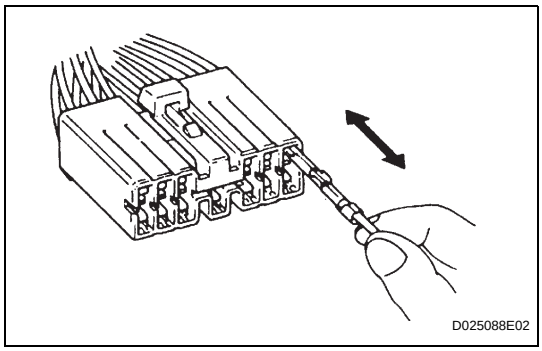

(3) Checking the contact pressure of the terminal:
Prepare a spare male terminal. Insert it into a female terminal, and check for ample tension when inserting and after full engagement.
NOTICE:
When testing a gold-plated female terminal, always use a gold-plated male terminal.

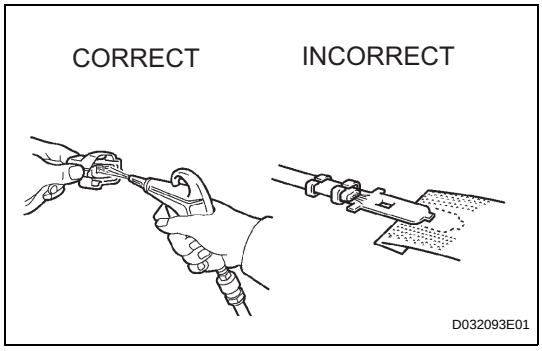

(d) REPAIR METHOD OF CONNECTOR TERMINAL
(1) If there is any foreign matter on the terminal, clean the contact point using an air gun or cloth. Never rub the contact point using sandpaper as the plating may come off.
(2) If there is abnormal contact pressure, replace the female terminal. If the male terminal is gold-plated (gold color), use a gold-plated female terminal; if it is silver-plated (silver color), use a silver-plated female terminal.
(3) Damaged, deformed, or corroded terminals should be replaced. If the terminal does not lock into the housing, the housing may have to be replaced.

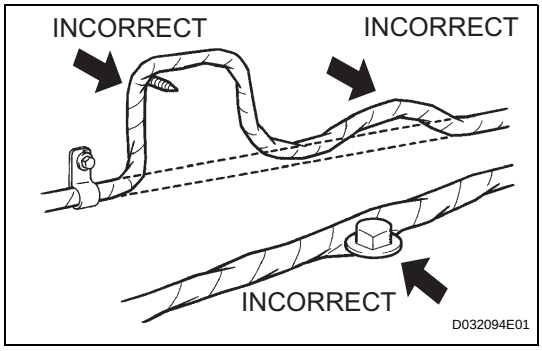

(e) HANDLING OF WIRE HARNESS
(1) If removing a wire harness, check the wiring and clamping before proceeding so that it can be restored in the same way.
(2) Never twist, pull or slacken the wire harness more than necessary.
(3) The wire harness should never come into contact with a high temperature part, or rotating, moving, vibrating or sharp-edged parts. Avoid contact with panel edges, screw tips and other sharp items.
(4) When installing parts, never pinch the wire harness.
(5) Never cut or break the cover of the wire harness. If it is cut or broken, replace it or repair it with vinyl tape.

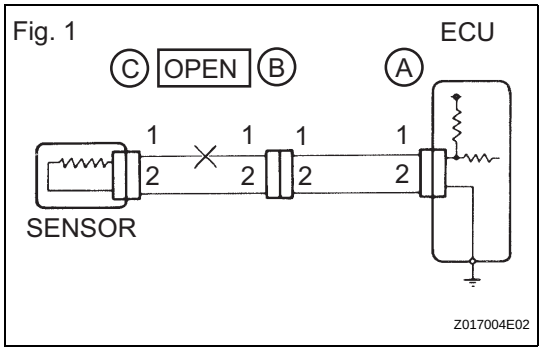

2. CHECK FOR OPEN CIRCUIT

(a) For an open circuit in the wire harness in Fig. 1, check the resistance or voltage, as described below.

Fig. 2

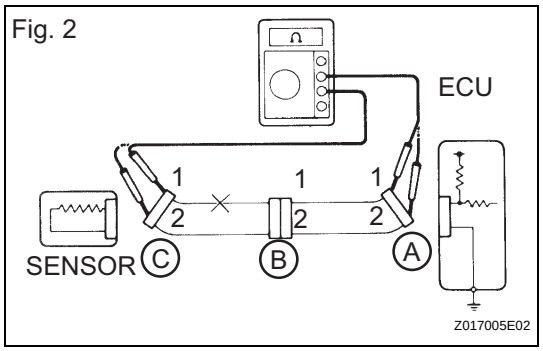

(b) Check the resistance.

(1) Disconnect connectors A and C and measure the resistance between them.

Standard resistance (Fig. 2)

Tester Connection	Specified Condition
Connector A terminal 1 - Connector C terminal 1	10 kΩ or higher
Connector A terminal 2 - Connector C terminal 2	Below 1Ω

HINT:

Measure the resistance while lightly shaking the wire harness vertically and horizontally. If the results match the examples above, an open circuit exists between terminal 1 of connector A and terminal 1 of connector C.

Fig. 3

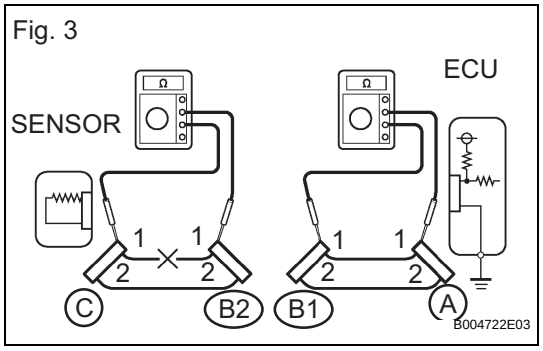

(2) Disconnect connector B and measure the resistance between the connectors.

Standard resistance (Fig. 3)

Tester Connection	Specified Condition
Connector A terminal 1 - Connector B1 terminal 1	Below 1 Ω
Connector B2 terminal 1 - Connector C terminal 1	10 kΩ or higher

If the results match the examples above, an open circuit exists between terminal 1 of connector B2 and terminal 1 of connector C.

Fig. 4

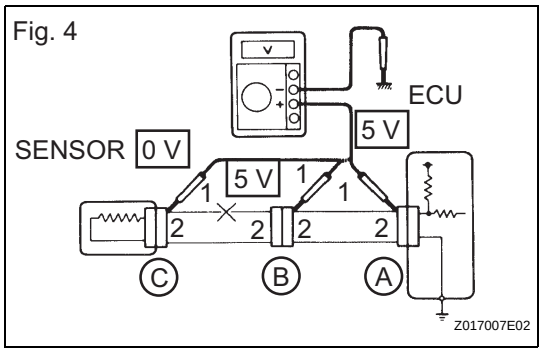

(c) Check the voltage.

(1) In a circuit in which voltage is applied to the ECU connector terminal, an open circuit can be checked by conducting a voltage check.
With each connector still connected, measure the voltage between the body ground and these terminals (in this order): 1) terminal 1 of connector A, 2) terminal 1 of connector B, and 3) terminal 1 of connector C.

Standard voltage (Fig. 4)

Tester Connection	Specified Condition
Connector A terminal 1 - Body ground	5 V
Connector B terminal 1 - Body ground	5 V
Connector C terminal 1 - Body ground	Below 1 V

If the results match the examples above, an open circuit exists in the wire harness between terminal 1 of connector B and terminal 1 of connector C.

IN

Fig. 5

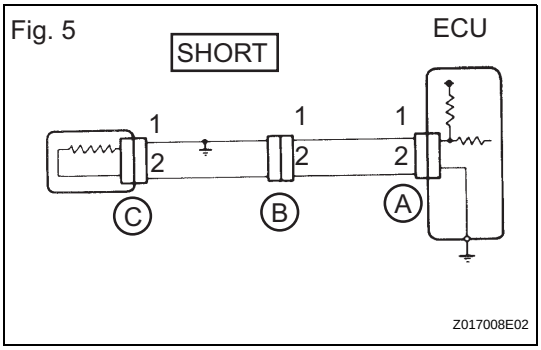

Fig. 6

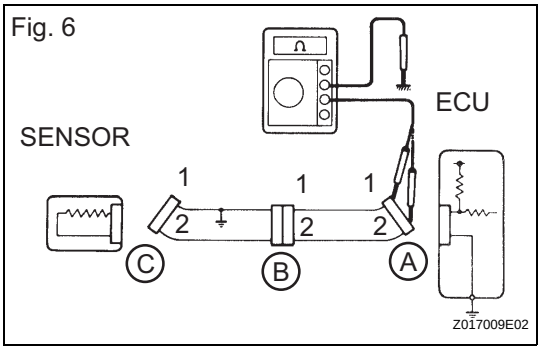

Fig. 7

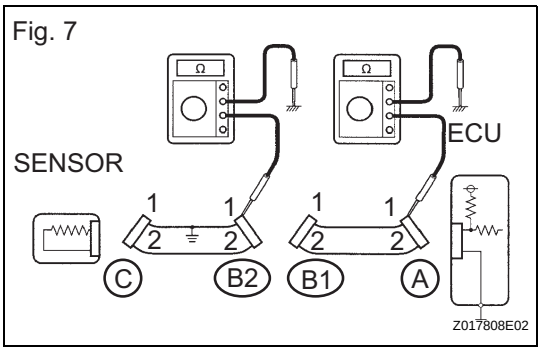

3. CHECK FOR SHORT CIRCUIT

(a) If the wire harness is ground shorted (Fig. 5), locate the section by conducting a resistance check with the body ground (below).

(b) Check the resistance with the body ground.

(1) Disconnect connectors A and C and measure the resistance.

Standard resistance (Fig. 6)

Tester Connection	Specified Condition
Connector A terminal 1 - Body ground	Below 1 Ω
Connector A terminal 2 - Body ground	10 kΩ or higher

HINT:

Measure the resistance while lightly shaking the wire harness vertically and horizontally. If your results match the examples above, a short circuit exists between terminal 1 of connector A and terminal 1 of connector C.

(2) Disconnect connector B and measure the resistance.

Standard resistance (Fig. 7)

Tester Connection	Specified Condition
Connector A terminal 1 - Body ground	10 kΩ or higher
Connector B2 terminal 1 - Body ground	Below 1 Ω

If the results match the examples above, a short circuit exists between terminal 1 of connector B2 and terminal 1 of connector C.

4. CHECK AND REPLACE ECU

NOTICE:

- **The connector should not be disconnected from the ECU. Perform the inspection from the backside of the connector on the wire harness side.**
- **When no measuring condition is specified, perform the inspection with the engine stopped and the ignition switch ON.**
- **Check that the connectors are fully seated. Check for loose, corroded or broken wires.**

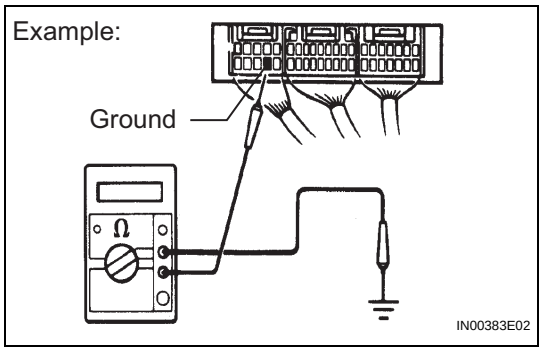

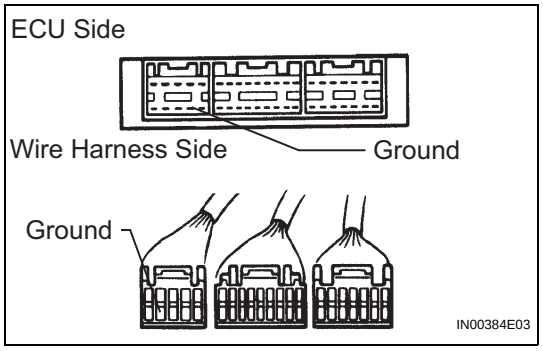

(a) First, check the ECU ground circuit. If it is faulty, repair it. If it is normal, the ECU could be faulty. Temporarily replace the ECU with a normally functioning one and check if the symptoms occur. If the trouble symptoms disappear, replace the original ECU.

(1) Measure the resistance between the ECU ground terminal and body ground.
Standard resistance:
Below 1 Ω

(2) Disconnect the ECU connector. Check the ground terminal on the ECU side and wire harness side for bending, corrosion or foreign matter. Lastly, check the contact pressure of the female terminals.

IN

TERMS

ABBREVIATIONS USED IN MANUAL

ABBREVIATIONS	MEANING
1st	First
2nd	Second
2WD	Two Wheel Drive Vehicle (4 x 2)
3rd	Third
4th	Fourth
4WD	Four Wheel Drive Vehicle (4 x 4)
4WS	Four Wheel Steering System
5th	Fifth
A.D.D.	Automatic Disconnecting Differential
A/C	Air Conditioner
A/F	Air-Fuel Ratio
A/T, ATM	Automatic Transmission (Transaxle)
ABS	Anti-Lock Brake System
AC	Alternating Current
ACC	Accessory
ACIS	Acoustic Control Induction System
ACM	Active Control Engine Mount
ACSD	Automatic Cold Start Device
AFS	Adaptive Front-Lighting System
AHC	Active Height Control Suspension
AID	Air Injection Control Driver
ALR	Automatic Locking Retractor
ALT	Alternator
AMP	Amplifier
ANT	Antenna
APPROX.	Approximately
ASSB	Assembly Services Sdn. Bhd.
ASSY	Assembly
ATF	Automatic Transmission Fluid
AUTO	Automatic
AUX	Auxiliary
AVG	Average
AVS	Adaptive Variable Suspension
B/L	Bi-Level
B/S	Bore-Stroke Ratio
B+	Battery Voltage
BA	Brake Assist
BACS	Boost Altitude Compensation System
BAT	Battery
BDC	Bottom Dead Center
BTDC	Before Top Dead Center
BVSV	Bimetallic Vacuum Switching Valve
C/V	Check Valve
Calif.	California
CAN	Controller Area Network
CB	Circuit Breaker

ABBREVIATIONS	MEANING
CCo	Catalytic Converter For Oxidation
CCV	Canister Closed Valve
CD	Compact Disc
CF	Cornering Force
CG	Center Of Gravity
CH	Channel
CKD	Complete Knock Down
COMB.	Combination
CPE	Coupe
CPS	Combustion Pressure Sensor
CPU	Central Processing Unit
CRS	Child Restraint System
CTR	Center
CV	Control Valve
CW	Curb Weight
D/INJ	Direct Injection
DC	Direct Current
DEF	Defogger
DFL	Deflector
DIFF.	Differential
DIFF. LOCK	Differential Lock
DLC	Data Link Connector
DLI	Distributorless Ignition
DOHC	Double Overhead Camshaft
DP	Dash Pot
DS	Dead Soak
DSP	Digital Signal Processor
DTC	Diagnostic Trouble Code
DVD	Digital Versatile Disc
E/G	Engine
EBD	Electronic Brake Force Distribution
EC	Electrochromic
ECAM	Engine Control And Measurement System
ECD	Electronically Controlled Diesel
ECDY	Eddy Current Dynamometer
ECT	Electronic Controlled Automatic Transmission/Transaxle
ECU	Electronic Control Unit
ED	Electro-Deposited Coating
EDIC	Electronic Diesel Injection Control
EDU	Electronic Driving Unit
EFI	Electronic Fuel Injection
EGR	Electronic Gas Recirculation
EGR	Exhaust Gas Recirculation
EGR-VM	EGR-Vacuum Modulator
ELR	Emergency Locking Retractor
EMPS	Electric Motor Power Steering
ENG	Engine
ES	Easy & Smooth
ESA	Electronic Spark Advance

ABBREVIATIONS	MEANING
ETCS-i	Electronic Throttle Control System-intelligent
EVAP	Evaporative Emission Control
EVP	Evaporator
E-VRV	Electric Vacuum Regulating Valve
EX	Exhaust
F/G	Fuel Gauge
F/P	Fuel Pump
F/W	Flywheel
FE	Fuel Economy
FF	Front-Engine Front-Wheel-Drive
FIPG	Formed In Place Gasket
FL	Fusible Link
FPU	Fuel Pressure Up
FR / Fr	Front
FW/D	Flywheel Damper
FWD	Front-Wheel-Drive
GAS	Gasoline
GND	Ground
GPS	Global Positioning System
GSA	Gear Shift Actuator
H/B	Hatchback
HAC	High Altitude Compensator
H-FUSE	High Current Fuse
HI	High
HID	High Intensity Discharge (Headlamp)
HPU	Hydraulic Power Unit
HSG	Housing
HT	Hard Top
HV	Hybrid Vehicle
HWS	Heated Windshield System
I/P	Instrument Panel
IC	Integrated Circuit
IDI	Indirect Diesel Injection
IFS	Independent Front Suspension
IG	Ignition
IIA	Integrated Ignition Assembly
IN	Intake (Manifold, Valve)
INT	Intermittent
IRS	Independent Rear Suspension
ISC	Idle Speed Control
J/B	Junction Block
J/C	Junction Connector
KD	Kick-Down
L/H/W	Length, Height, Width
LAN	Local Area Network
LB	Liftback
LCD	Liquid Crystal Display
LED	Light Emitting Diode
LH	Left-Hand

ABBREVIATIONS	MEANING
LHD	Left-Hand Drive
LLC	Long-Life Coolant
LNG	Liquefied Natural Gas
LO	Low
LPG	Liquefied Petroleum Gas
LSD	Limited Slip Differential
LSP & PV	Load Sensing Proportioning and Bypass Valve
LSPV	Load Sensing Proportioning Valve
M/T, MTM	Manual Transmission (Transaxle)
MAP	Manifold Absolute Pressure
MAX.	Maximum
MG1	Motor Generator No.1
MG2	Motor Generator No.2
MIC	Microphone
MIL	Malfunction Indicator Lamp
MIN.	Minimum
MMT	Multi-mode Manual Transmission
MP	Multipurpose
MPI	Multipoint Electronic Injection
MPX	Multiplex Communication System
MT	Mount
MTG	Mounting
N	Neutral
NA	Natural Aspiration
NO. / No.	Number
O/D	Overdrive
O/S	Oversize
O2S	Oxygen Sensor
OC	Oxidation Catalyst
OCV	Oil Control Valve
OEM	Original Equipment Manufacturing
OHC	Overhead Camshaft
OHV	Overhead Valve
OPT	Option
ORVR	On-board Refilling Vapor Recovery
P & BV	Proportioning And Bypass Valve
P/W	Power Window
PBD	Power Back Door
PCS	Power Control System
PCV	Positive Crankcase Ventilation
PKB	Parking Brake
PPS	Progressive Power Steering
PROM	Programmable Read Only Memory
PS	Power Steering
PSD	Power Slide Door
PTC	Positive Temperature Coefficient
PTO	Power Take-Off
PZEV	Partial Zero Emission Vehicle
R & P	Rack and Pinion

ABBREVIATIONS	MEANING
R/B	Relay Block
R/F	Reinforcement
RAM	Random Access Memory
RBS	Recirculating Ball Type Steering
RFS	Rigid Front Suspension
RH	Right-Hand
RHD	Right-Hand Drive
RLY	Relay
ROM	Read Only Memory
RR / Rr	Rear
RRS	Rigid Rear Suspension
RSE	Rear Seat Entertainment
RWD	Rear-Wheel Drive
SC	Supercharger
SCV	Swirl Control Valve
SDN	Sedan
SEN	Sensor
SICS	Starting Injection Control System
SOC	State Of Charge
SOHC	Single Overhead Camshaft
SPEC	Specification
SPI	Single Point Injection
SRS	Supplemental Restraint System
SSM	Special Service Materials
SST	Special Service Tools
STD	Standard
STJ	Cold-Start Fuel Injection
SW	Switch
SYS	System
T/A	Transaxle
T/M	Transmission
TACH	Tachometer
TAM	P.T. TOYOTA-Astra Motor
TASA	TOYOTA Argentina S.A.
TAT	TOYOTA Motor Thailand Co. Ltd.
TAW	TOYOTA Auto Works Co. Ltd.
TBI	Throttle Body Electronic Fuel Injection
TC	Turbocharger
TCCS	TOYOTA Computer-Controlled System
TCV	Timing Control Valve
TDC	Top Dead Center
TDV	TOYOTA de Venezuela C.A.
TEMP.	Temperature
TEMS	TOYOTA Electronic Modulated Suspension
TFT	TOYOTA Free-Tronic
TIS	Total Information System For Vehicle Development
TKM	TOYOTA Kirloskar Motor Ltd.
TMC	TOYOTA Motor Corporation
TMMIN	PT. TOYOTA Motor Manufacturing Indonesia

ABBREVIATIONS	MEANING
TMMK	TOYOTA Motor Manufacturing Kentucky, Inc.
TMP	TOYOTA Motor Philippines Corp.
TMT	TOYOTA Motor Thailand Co. Ltd.
TRAC	Traction Control System
TRC	Traction Control System
TSAM	TOYOTA South Africa Motors (Pty) Ltd.
TURBO	Turbocharge
TWC	Three-Way Catalyst
U/D	Underdrive
U/S	Undersize
VCV	Vacuum Control Valve
VENT	Ventilator
VGRS	Variable Gear Ratio Steering
VIM	Vehicle Interface Module
VIN	Vehicle Identification Number
VPS	Variable Power Steering
VSC	Vehicle Skid Control
VSC	Vehicle Stability Control
VSV	Vacuum Switching Valve
VTV	Vacuum Transmitting Valve
VVT-i	Variable Valve Timing-intelligent
W/ / w/	With
W/H	Wire Harness
W/O / w/o	Without
WGN	Wagon

GLOSSARY OF SAE AND TOYOTA TERMS

This glossary lists all SAE-J1930 terms and abbreviations used in this manual in compliance with SAE recommendations, as well as their TOYOTA equivalents.

SAE ABBREVIATIONS	SAE TERMS	TOYOTA TERMS ( )-ABBREVIATIONS
3GR	Third Gear	-
4GR	Fourth Gear	-
A/C	Air Conditioning	Air Conditioner
ACL	Air Cleaner	Air Cleaner, A/CL
AIR	Secondary Air Injection	Air Injection (AI)
AP	Accelerator Pedal	-
B+	Battery Positive Voltage	+B, Battery Voltage
BARO	Barometric Pressure	HAC
CAC	Charge Air Cooler	Intercooler
CARB	Carburetor	Carburetor
CFI	Continuous Fuel Injection	-
CKP	Crankshaft Position	Crank Angle
CL	Closed Loop	Closed Loop
CMP	Camshaft Position	Cam Angle
CPP	Clutch Pedal Position	-
CTOX	Continuous Trap Oxidizer	-
CTP	Closed Throttle Position	LL ON, Idle ON
DFI	Direct Fuel Injection	Direct Injection (DI/INJ)
DI	Distributor Ignition	-
DLC3	Data Link Connector 3	OBD II Diagnostic Connector
DTC	Diagnostic Trouble Code	Diagnostic Trouble Code
DTM	Diagnostic Test Mode	-
ECL	Engine Coolant Level	-
ECM	Engine Control Module	Engine Electronic Control Unit (ECU)
ECT	Engine Coolant Temperature	Coolant Temperature, Water Temperature (THW)
EEPROM	Electrically Erasable Programmable Read Only Memory	Electrically Erasable Programmable Read Only Memory (EEPROM)
EFE	Early Fuel Evaporation	Cold Mixture Heater (CMH), Heat Control Valve (HCV)
EGR	Exhaust Gas Recirculation	Exhaust Gas Recirculation (EGR)
EI	Electronic Ignition	Distributorless Ignition (DLI)
EM	Engine Modification	Engine Modification (EM)
EPROM	Erasable Programmable Read Only Memory	Programmable Read Only Memory (PROM)
EVAP	Evaporative Emission	Evaporative Emission Control (EVAP)
FC	Fan Control	-
FEEPROM	Flash Electrically Erasable Programmable Read Only Memory	-
FEPROM	Flash Erasable Programmable Read Only Memory	-
FF	Flexible Fuel	-
FP	Fuel Pump	Fuel Pump
GEN	Generator	Alternator
GND	Ground	Ground (GND)
HO2S	Heated Oxygen Sensor	Heated Oxygen Sensor (HO2S)
IAC	Idle Air Control	Idle Speed Control (ISC)

SAE ABBREVIATIONS	SAE TERMS	TOYOTA TERMS ( )-ABBREVIATIONS
IAT	Intake Air Temperature	Intake or Inlet Air temperature
ICM	Ignition Control Module	-
IFI	Indirect Fuel Injection	Indirect Injection (IDL)
IFS	Inertia Fuel-Shutoff	-
ISC	Idle Speed Control	-
KS	Knock Sensor	Knock Sensor
MAF	Mass Air Flow	Air Flow Meter
MAP	Manifold Absolute Pressure	Manifold Pressure Intake Vacuum
MC	Mixture Control	Electric Bleed Air Control Valve (EBCV) Mixture Control Valve (MCV) Electric Air Control Valve (EACV)
MDP	Manifold Differential Pressure	-
MFI	Multiport Fuel Injection	Electronic Fuel Injection (EFI)
MIL	Malfunction Indicator Lamp	Check Engine Lamp
MST	Manifold Surface Temperature	-
MVZ	Manifold Vacuum Zone	-
NVRAM	Non-Volatile Random Access Memory	-
O2S	Oxygen Sensor	Oxygen Sensor, O2 Sensor (O2S)
OBD	On-Board Diagnostic	On-Board Diagnostic System (OBD)
OC	Oxidation Catalytic Converter	Oxidation Catalyst Converter (OC), CCo
OL	Open Loop	Open Loop
PAIR	Pulsed Secondary Air Injection	Air Suction (AS)
PCM	Powertrain Control Module	-
PNP	Park/Neutral Position	-
PROM	Programmable Read Only Memory	-
PSP	Power Steering Pressure	-
PTOX	Periodic Trap Oxidizer	Diesel Particulate Filter (DPF) Diesel Particulate Trap (DPT)
RAM	Random Access Memory	Random Access Memory (RAM)
RM	Relay Module	-
ROM	Read Only Memory	Read Only Memory (ROM)
RPM	Engine Speed	Engine Speed
SC	Supercharger	Supercharger
SCB	Supercharger Bypass	E-ABV
SFI	Sequential Multiport Fuel Injection	Electronic Fuel Injection (EFI), Sequential Injection
SPL	Smoke Puff Limiter	-
SRI	Service Reminder Indicator	-
SRT	System Readiness Test	-
ST	Scan Tool	-
TB	Throttle Body	Throttle Body
TBI	Throttle Body Fuel Injection	Single Point Injection Central Fuel Injection (Ci)
TC	Turbocharger	Turbocharger
TCC	Torque Converter Clutch	Torque Converter
TCM	Transmission Control Module	Transmission ECU, ECT ECU
TP	Throttle Position	Throttle Position
TR	Transmission Range	-
TVV	Thermal Vacuum Valve	Bimetallic Vacuum Switching Valve (BVSV) Thermostatic Vacuum Switching Valve (TVSV)

SAE ABBREVIATIONS	SAE TERMS	TOYOTA TERMS ( )-ABBREVIATIONS
TWC	Three-Way Catalytic Converter	Three-Way Catalytic (TWC) Manifold Converter CCRO
TWC+OC	Three-Way + Oxidation Catalytic Converter	CCR + CCo
VAF	Volume Air Flow	Air Flow Meter
VR	Voltage Regulator	Voltage Regulator
VSS	Vehicle Speed Sensor	Vehicle Speed Sensor
WOT	Wide Open Throttle	Full Throttle
WU-OC	Warm Up Oxidation Catalytic Converter	-
WU-TWC	Warm Up Three-Way Catalytic Converter	-

LIGHTING SYSTEM

PRECAUTION

1. DISCONNECT AND RECONNECT CABLE OF NEGATIVE BATTERY TERMINAL

NOTICE:

When disconnecting the cable from the negative (-) battery terminal, initialize the following systems after the cable is reconnected.

System Name	See procedure
METER / GAUGE SYSTEM	See page ME-10

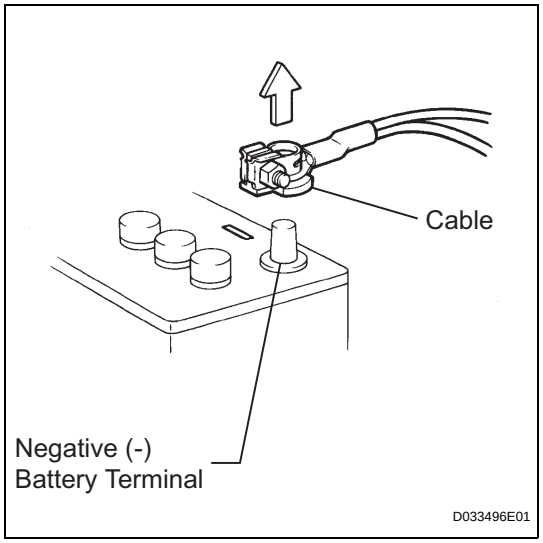

(a) Before performing electronic work, disconnect the cable from the negative (-) battery terminal in order to prevent it from shorting and burning out.

(b) Before disconnecting and reconnecting the battery cable, turn the ignition switch OFF and the headlight dimmer switch OFF. Then loosen the terminal nut completely. Do not damage the cable or terminal.

(c) When the battery cable is disconnected, the clock and radio settings and stored DTCs are erased. Therefore, before disconnecting the battery cable, make a notes of them.

PARTS LOCATION

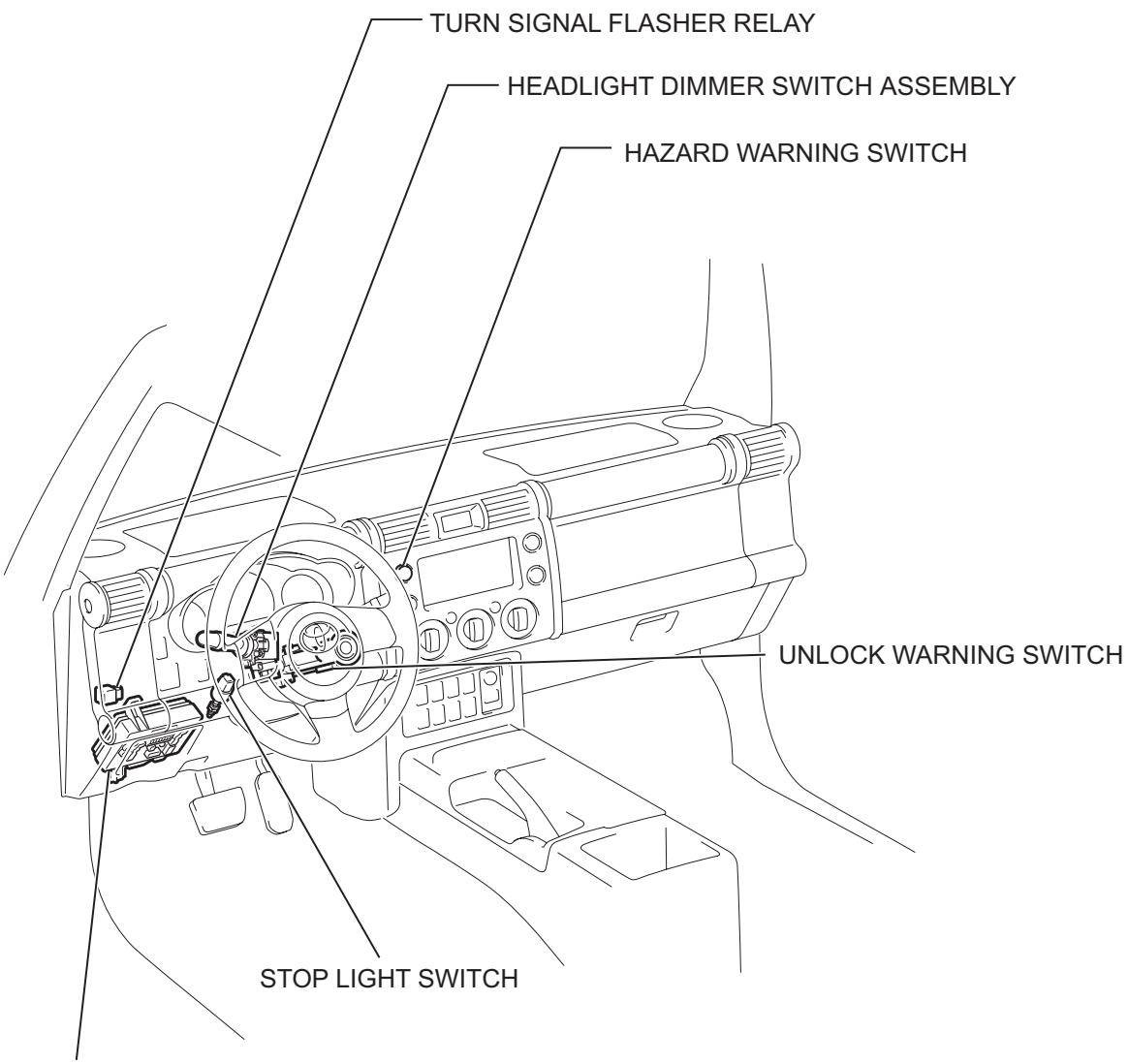

P

B136047E01

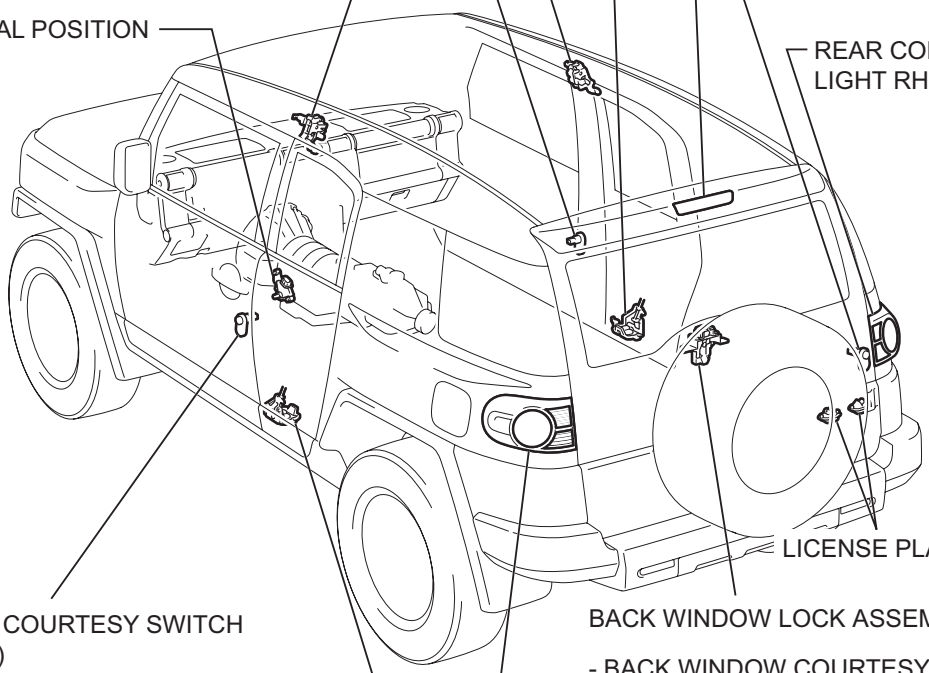

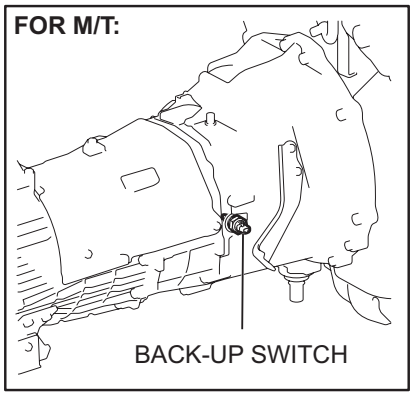

P

B136048E01

LI

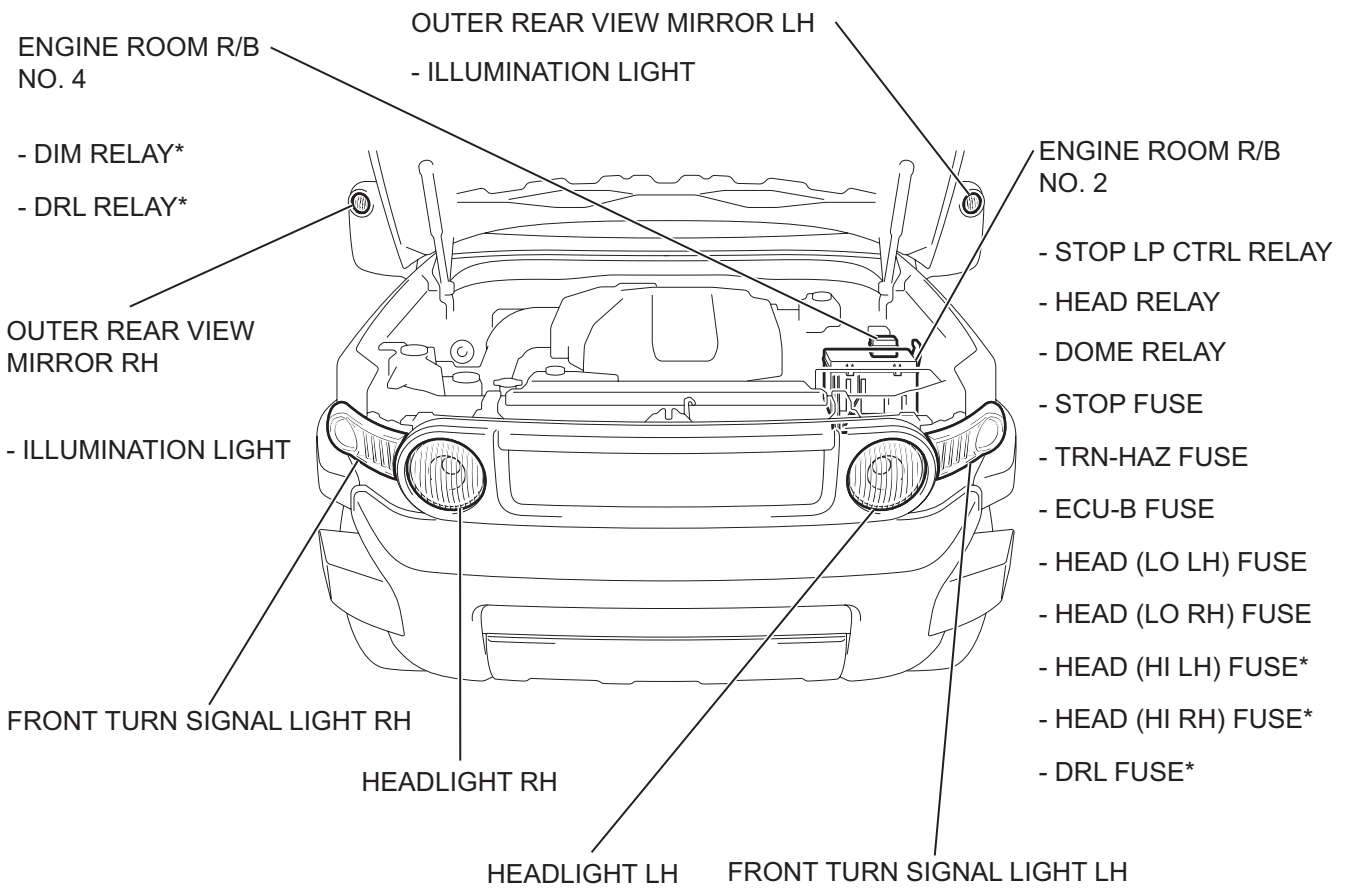

*: W/ DAY TIME RUNNING LIGHT SYSEM

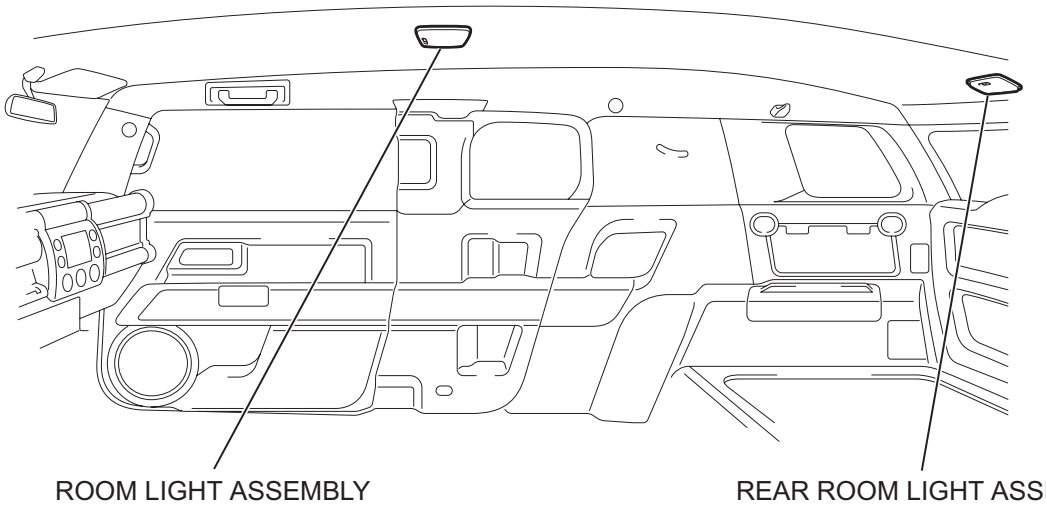

P

B136049E01

SYSTEM DIAGRAM

w/ Daytime Running Light System:

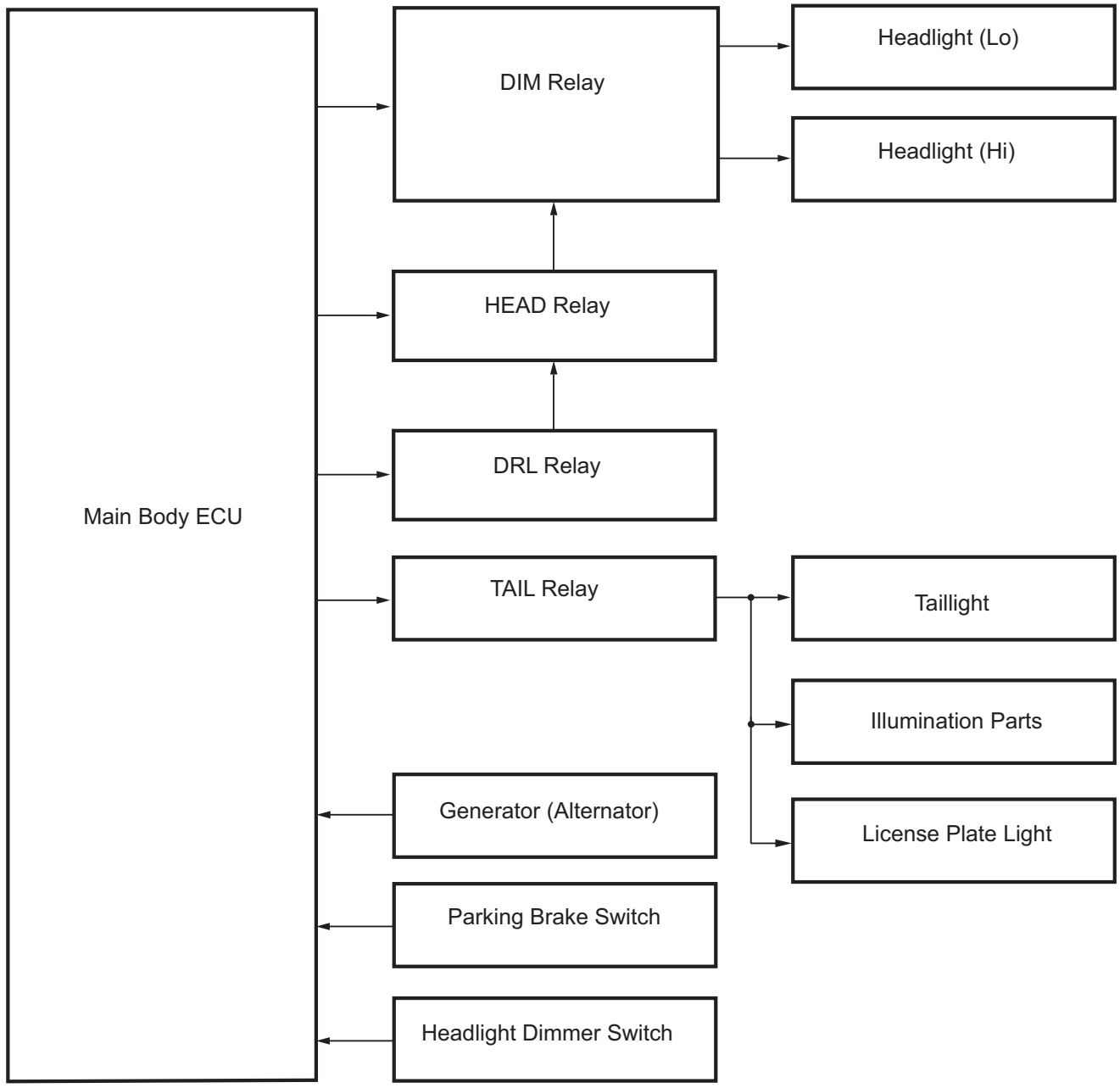

w/o Daytime Running Light System:

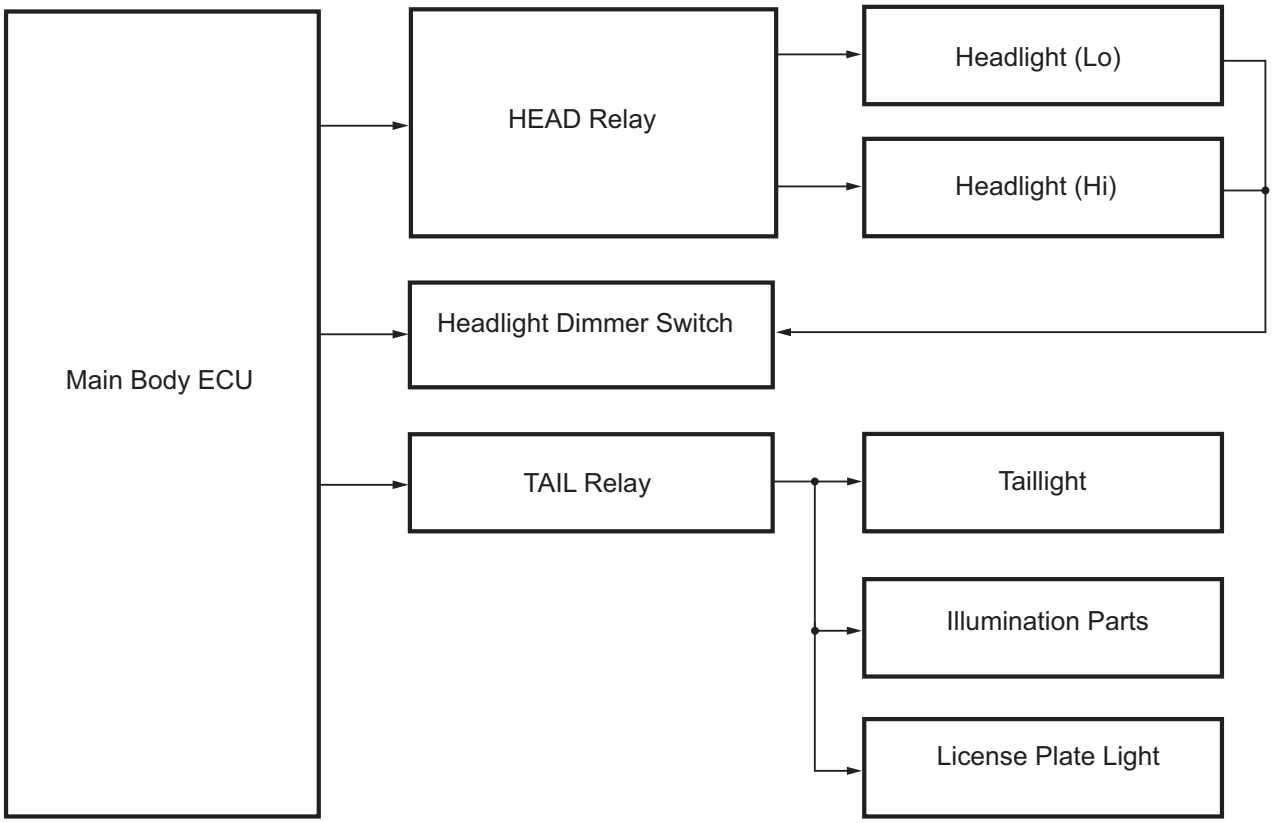

B138186E01

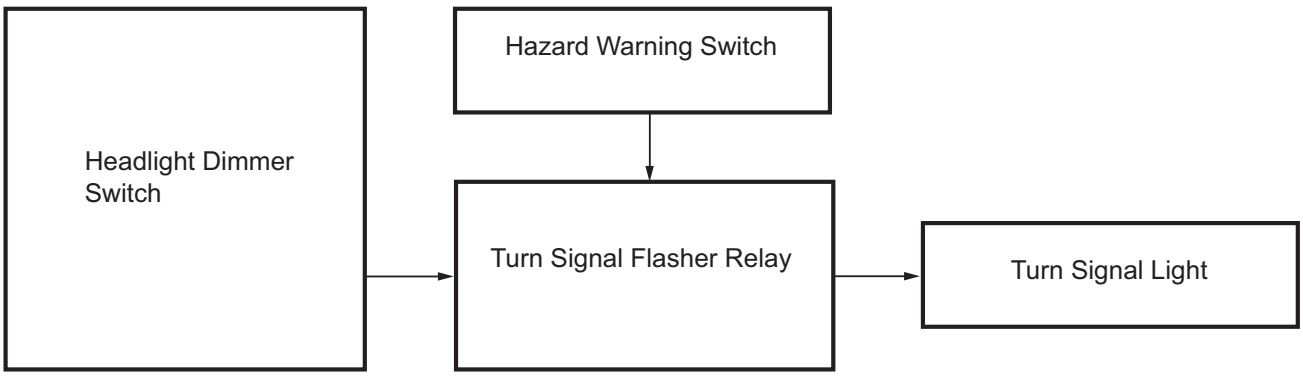

B138187E01

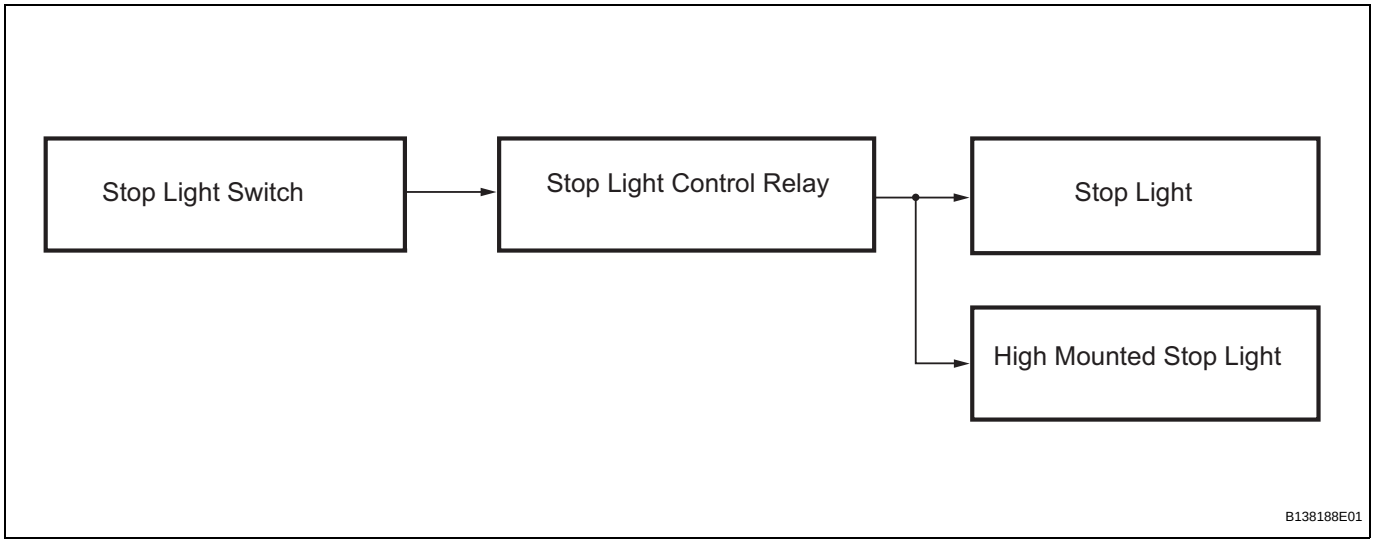
Stop Light Switch
Stop Light Control Relay
Stop Light
High Mounted Stop Light
B138188E01

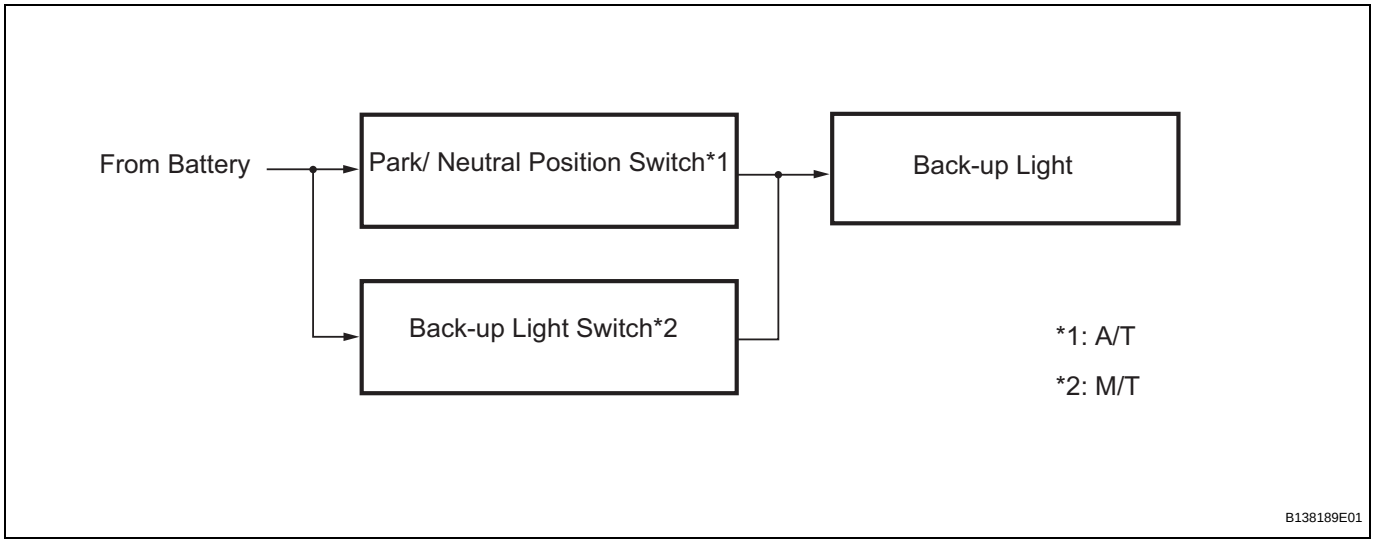
From Battery
Park/ Neutral Position Switch*1
Back-up Light
Back-up Light Switch*2
*1: A/T
*2: M/T
B138189E01

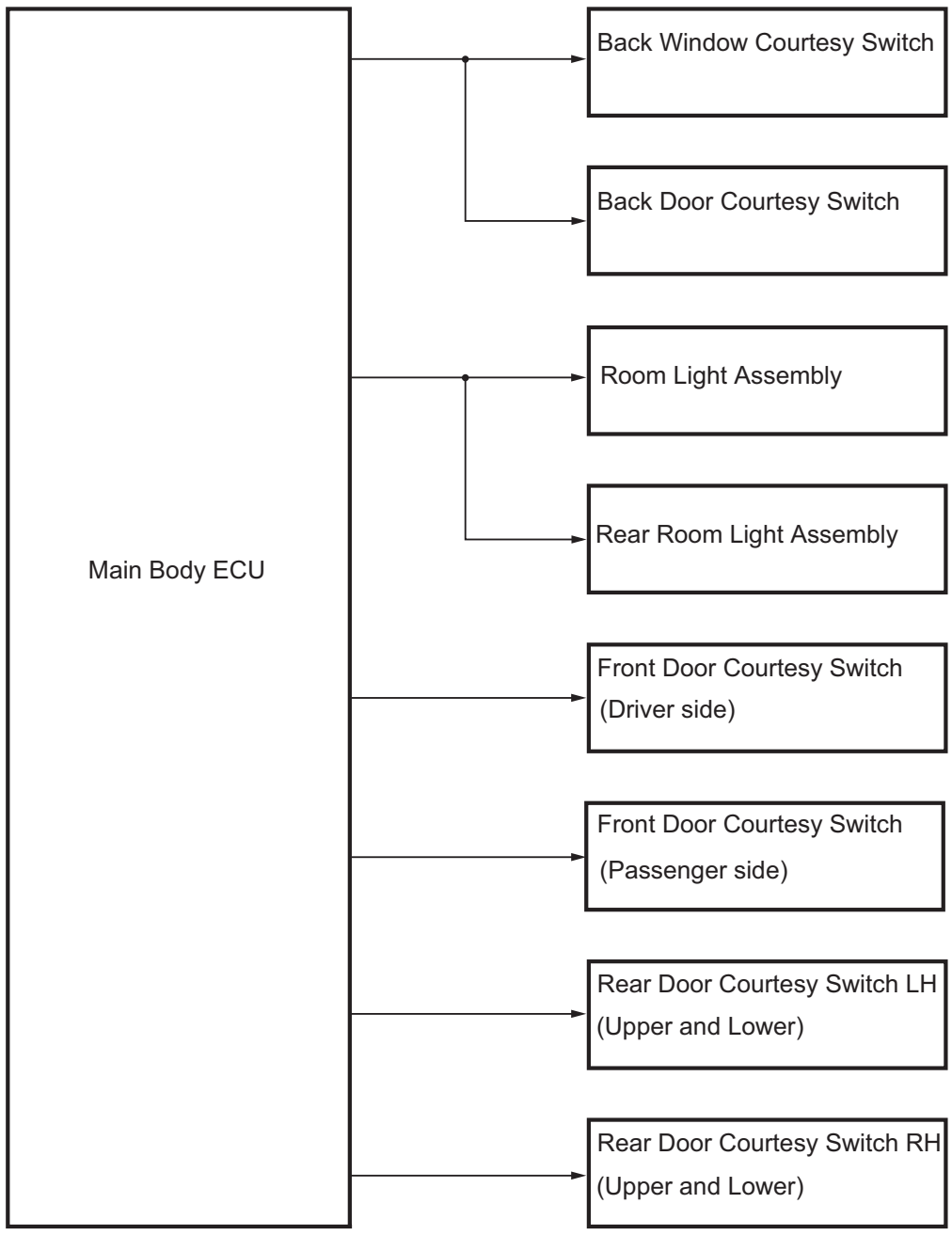
Main Body ECU
Back Window Courtesy Switch
Back Door Courtesy Switch
Room Light Assembly
Rear Room Light Assembly
Front Door Courtesy Switch
(Driver side)
Front Door Courtesy Switch
(Passenger side)
Rear Door Courtesy Switch LH
(Upper and Lower)
Rear Door Courtesy Switch RH
(Upper and Lower)
B138190E01

SYSTEM DESCRIPTION

1. LIGHTING SYSTEM

(a) Illumination control system (Illuminated entry system):
When the doors are unlocked through a key or transmitter operation, or when a door is opened or closed, the illuminated entry system turns on the room light assembly.

(1) The main body ECU receives the following signal (A).
- Door courtesy switch signal
- Door detection switch signal
- Ignition switch signal

(2) The main body ECU controls the following signal based on the signals listed in A.
- Illumination operation signal

(3) The main body ECU controls the on/off and fade-in/fade-out operation of the following parts.
- Room light assembly

(b) Battery saver system:
When the ignition switch is turned off and the any of the doors is open continuously for 30 minutes, the main body ECU turns the illumination operation signal off. As a result, the room light assembly, taillights, and the headlights turn off.

(1) The main body ECU receives the following signals (B).
- Door courtesy switch signal
- Ignition switch signal

(2) The main body ECU controls the following signal based on the signals listed in B (C).
- Illumination operation signal

(3) The main body ECU controls the illumination period of the following parts based on the signals listed in C.
- Room light assembly
- Headlight (Low)
- Position light (Front and Rear)

(c) Manual light control system:
This system functions when lights such as the headlights and taillights are illuminated through manual operation of the light control switch.

(1) The main body ECU receives the following signals (D).
- Light control switch signal
- Headlight dimmer switch signal

(2) The main body ECU controls the following signals based on the signals listed in D (E).
- HEAD relay operation signal
- TAIL relay operation signal
- Running light relay assembly operation signal

(3) The main body ECU controls the on/off operation of the following parts based on the signals listed in E.
- Headlight (Low)
- Headlight (High)
- Position light (Front and Rear)

(d) Light auto turn off system (for U. S. A):
With the light control switch in the TAIL or HEAD position, the headlights and taillights go off 30 seconds after the ignition switch is turned off and all the doors are closed. However, when all the doors are locked using the door lock button, ignition key, or LOCK button on the transmitter, the headlights and taillights go off immediately.
Light auto turn off system (for Canada):
With the light control switch in the TAIL or HEAD position, the headlights and taillights go off immediately after the ignition switch is turned off and the driver door is opened.
(1) The main body ECU receives the following signals (F).
- Door courtesy switch signal
- Ignition switch signal

(2) The main body ECU controls the following signals based on the signals listed in F (G).
- HEAD relay operation signal
- TAIL relay operation signal
- Running light relay assembly operation signal

(3) The main body ECU controls the illumination period of the following parts based on the signals listed in G.
- Headlight (Low)
- Headlight (High)
- Position light (Front and Rear)

(e) Daytime running light system:
This system is directly connected to the low-beam headlights and is designed to automatically activate the daytime running lights in order to increase the visibility of the vehicle.
(1) The main body ECU receives the following signals (I).
- Ignition switch signal
- Generator signal
- Parking brake switch signal
- Light control switch signal

(2) The main body ECU controls the following signal based on the signals listed in I.
- Running light relay assembly operation signal

(3) The main body ECU controls the on/off operation of the following part.
- Headlight (Low)

HOW TO PROCEED WITH TROUBLESHOOTING

HINT:
- Use these procedures to troubleshoot the lighting system.
- *: Use the intelligent tester.

1	VEHICLE BROUGHT TO WORKSHOP

NEXT

2	CUSTOMER PROBLEM ANALYSIS CHECK AND SYMPTOM CHECK

NEXT

3	INSPECT BATTERY VOLTAGE

Standard voltage:
11 to 14 V
If the voltage is below 11 V, recharge or replace battery before proceeding.

NEXT

4	INSPECT COMMUNICATION FUNCTION OF LARGE-SCALE MULTIPLEX COMMUNICATION SYSTEM (BEAN)*

(a) Use the intelligent tester to check if the Multiplex Communication System (MPX) is functioning normally.
Result

Result	Proceed to
MPX DTC is not output	A
MPX DTC is output	B

B → **GO TO MULTIPLEX COMMUNICATION SYSTEM**

A

5	PROBLEM SYMPTOMS TABLE

Result

Result	Proceed to
If fault is not listed in problem symptoms table	A
If fault is listed in problem symptoms table	B

B → **Go to step 7**

LI

A

6	**OVERALL ANALYSIS AND TROUBLESHOOTING***

(a) Terminals of ECU (see page LI-15)
(b) DATA LIST / ACTIVE TEST (see page LI-18)

NEXT

7	**REPAIR OR REPLACE**

NEXT

8	**CONFIRMATION TEST**

NEXT

LI

END

CUSTOMIZE PARAMETERS

HINT:

- When the customer requests modification of items, first make sure that the functions can be customized.
- Make a note of the current settings before customization.
- When troubleshooting items, first make sure that the functions are set to their default settings.
- The following items can be customized.

ILLUMINATED ENTRY:

Display (Item)	Default	Contents	Setting
LIGHTING TIME (Lighting Time)	15 (second)	Changes illumination duration after door closure. (It will quickly fade out in case of turning the ignition switch ON)	7.5/ 15/ 30 (second)
I/L ON / UNLOCK (Room light illuminates when door key unlocked.)	ON	Function to light up the room light, when unlocking with the door key cylinder. (Room light illuminated when room light switch in DOOR position)	ON / OFF
I/L ON / ACC OFF (Room light illuminates when ignition switch turned off)	ON	Illuminates light when ignition switch turned from ACC to LOCK. (Room light illuminated when room light switch in DOOR position)	ON / OFF

HINT:

Sensitivity adjustment can hardly be confirmed. Please check by customer's actual driving.

PROBLEM SYMPTOMS TABLE

HINT:
Use the table below to help determine the causes of the problem symptom. The potential causes of the symptoms are listed in order of probability in the "Suspected Area" column of the table. Check each symptom by checking the suspected areas in the order they are listed. Replace parts as necessary.

Headlight and taillight system

Symptom	Suspected area	See page
Neither headlight comes on. (w/o Daytime running light system)	Headlight relay circuit	LI-25
	Light control switch circuit	LI-47
	Harness or connector	-
	Main body ECU	-
Neither headlight comes on. (w/ Daytime running light system)	Headlight relay circuit	LI-25
	DRL Relay circuit	LI-28
	Light control switch circuit	LI-47
	Harness or connector	-
	Main body ECU	-
Only one headlight comes on.	Bulb	-
	HEAD fuse	-
	Harness or connector	-
LO-Beam lights do not come on.	Bulb	-
	Light control switch circuit	LI-47
	HEAD fuse	-
	DIM relay (w/ Daytime running light system)	LI-126
	Harness or connector	-
	Main body ECU	-
HI-Beam lights do not come on.	Bulb	-
	Light control switch circuit	LI-47
	HEAD fuse	-
	DIM relay (w/ Daytime running light system)	LI-126
	Harness or connector	-
	Main body ECU	-
No taillights come on. (Headlights normal)	Taillight relay circuit	LI-61
	Harness or connector	-
Only one taillight comes on.	Bulb	-
	Taillight relay circuit	LI-61
	Harness or connector	-
License plate light does not come on.	Taillight relay circuit	LI-61
	Harness or connector	-

Daytime running light system

Symptom	Suspected area	See page
Day time running light system does not operate	DRL Relay circuit	LI-28
	Light control switch circuit	LI-47
	Parking brake switch	PB-24
	Harness or connector	-
	Main body ECU	-

Stop light system

Symptom	Suspected area	See page
No stop lights come on.	Stop light switch circuit	LI-20
	Harness or connector	-
Only one stop light does not come on.	Bulb	-
	Stop light switch circuit	LI-20
	Harness or connector	-
High mounted stop light does not come on.	Stop light switch circuit	LI-20
	Harness or connector	-

Turn signal light system

Symptom	Suspected area	See page
No turn signal lights come on.	Turn signal light circuit	LI-32
	Harness or connector	-
Only one turn signal light does not come on.	Bulb	-
	Turn signal light circuit	LI-32
	Harness or connector	-

Hazard warning light system

Symptom	Suspected area	See page
Hazard warning light does not operate (Turn signal normal)	Hazard warning switch circuit	LI-38
	Harness or connector	-

Room light system

Symptom	Suspected area	See page
Room light assembly does not come on.	Bulb	-
	DOME Relay	-
	Illumination circuit	LI-58
	Door courtesy switch circuit	LI-51
	Harness or connector	-

Light auto turn off system

Symptom	Suspected area	See page
Light auto turn off system does not operate	Unlock warning switch	DL-102
	Headlight relay circuit	LI-25
	Door courtesy switch circuit	LI-51
	Harness or connector	-

TERMINALS OF ECU

1. CHECK MAIN BODY ECU

Main Body ECU:

Left View:

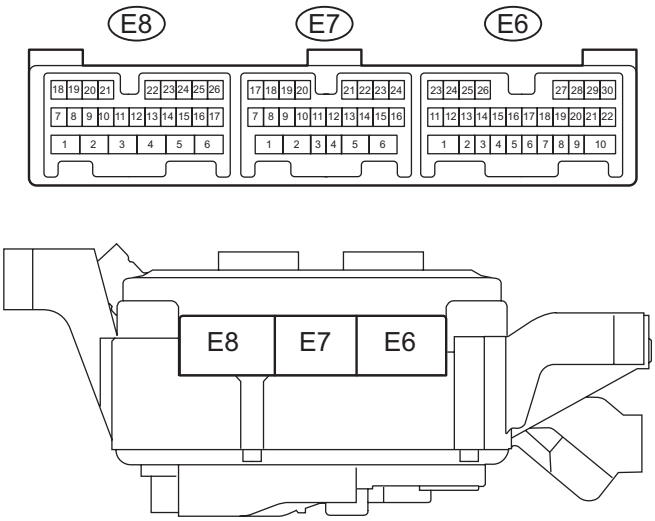

Rear View:

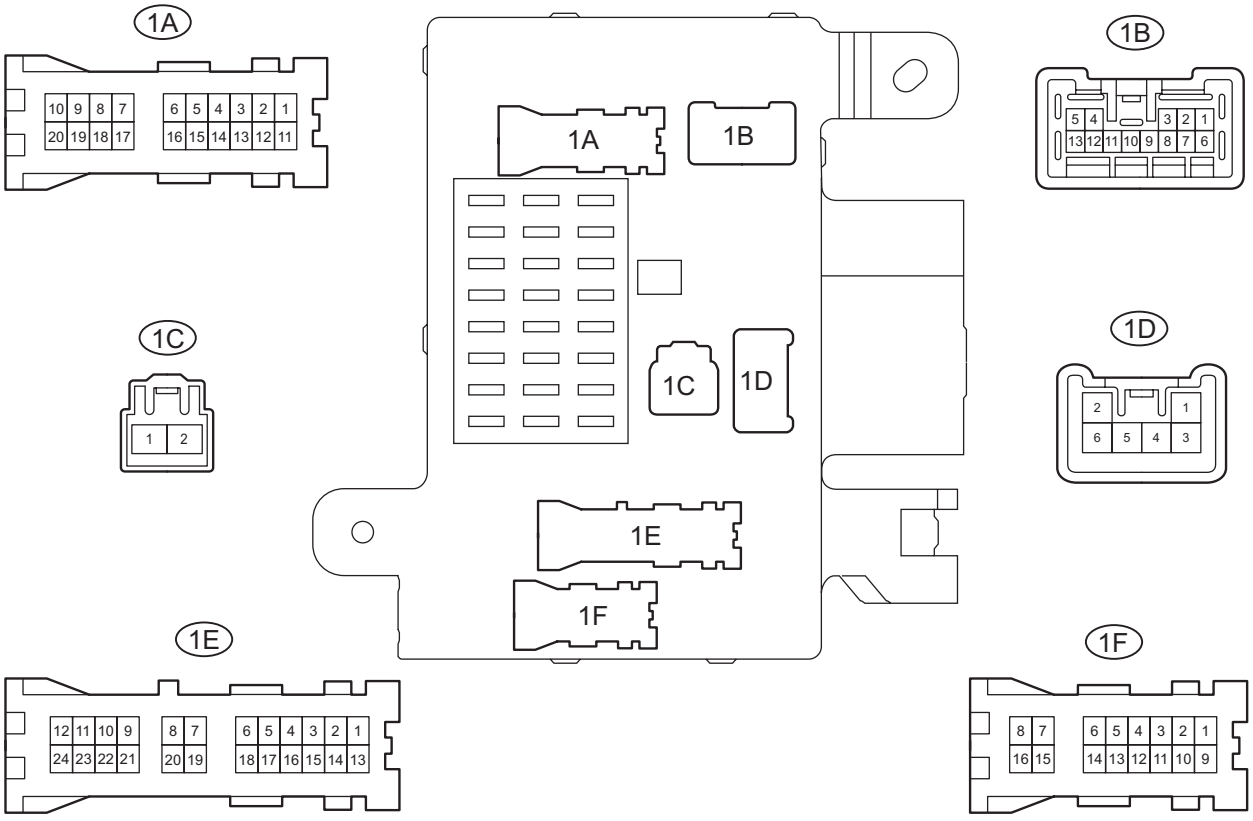

Y

B136051E01

Main Body ECU:

Front View:

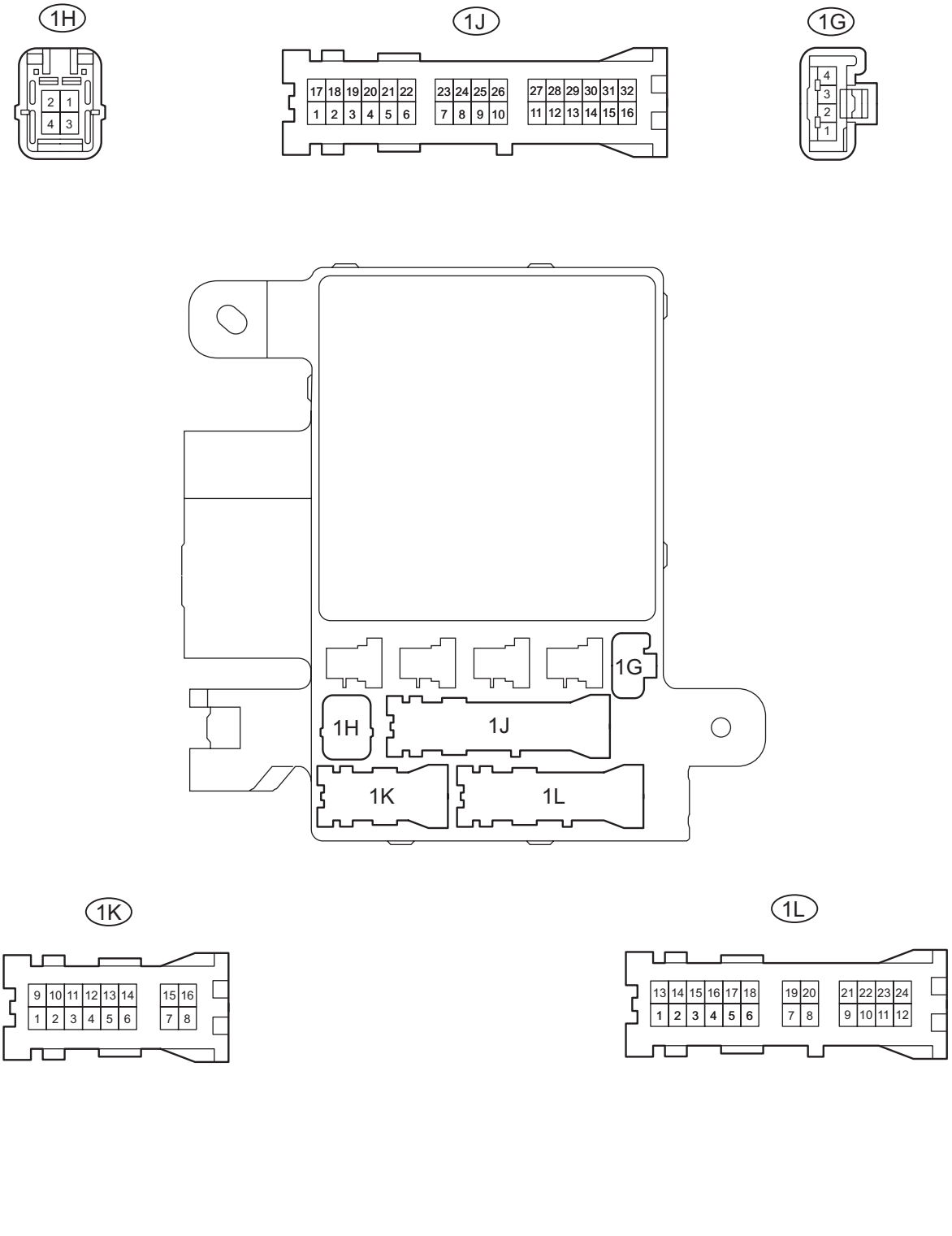

(a) Disconnect the 1A, 1B, 1E, and 1H main body ECU (driver side J/B) connectors.

(b) Measure the voltages and resistances of the wire harness side connectors.

Standard:

Symbols (Terminal No.)	Wiring Color	Terminal Description	Condition	Specified Condition
GND1 (1H-2) - Body ground	W-B - Body ground	Ground	Always	Below 1 Ω
BECU (1B-4) - Body ground	W-R - Body ground	Power source circuit (From battery)	Always	11 to 14 V
BDR1 (1E-9) - Body ground	B-Y - Body ground	Power source circuit (From battery)	Always	11 to 14 V
GND2 (1A-7) - Body ground	W - Body ground	Ground	Always	Below 1 Ω

If the result is not as specified, there may be a malfunction in the wire harness.

(c) Reconnect the main body ECU (driver side J/B) connectors.

(d) Measure the voltages of the wire harness side connectors.

Standard voltage:

Symbols (Terminal No.)	Wiring Color	Terminal Description	Condition	Specified Condition
SIG - (1F-8) Body ground	B-R - Body ground	Ignition switch signal	Ignition switch OFF	Below 1 V
			Ignition switch ON	10 to 14 V
ILE (1A-8) - Body ground	W - Body ground	Illumination signal (To room light assembly)	Driver door closed	10 to 14 V
			Driver door open	Below 1 V
HRLY (1B-8) - Body ground	Y-P - Body ground	HEAD signal (To HEAD relay)	Light control switch OFF or in TAIL	10 to 14 V
			Light control switch in HEAD	Below 1 V
TRLY (1E-16) - Body ground	V - Body ground	TAIL signal (To TAIL relay)	Light control switch OFF	10 to 14 V
			Light control switch in TAIL or HEAD	Below 1 V
ACC (1D-5) - Body ground	W-G - Body ground	Ignition switch (From battery) ACC signal circuit (To ignition switch)	Ignition switch OFF	Below 1 V
			Ignition switch ACC	10 to 14 V
H-ON (1B-3)* - Body ground	GR-G* - Body ground	DRL signal (To DRL relay)	Light control switch OFF or in TAIL position and engine running and parking brake off	Below 1 V
			Ignition switch OFF	10 to 14 V
LMRY (E6-3) - Body ground	GR-R - Body ground	DOME relay output signal (To DOME relay)	All doors locked	10 to 14 V
			Any door open	Below 1 V
DIM* (E6-7) - Body ground	R-G* - Body ground	DIM relay output signal (To DIM relay)	Dimmer switch in FLASH or HIGH	Below 1 V
			Dimmer switch in LOW	10 to 14 V
L* (E6-14) - Body ground	GR* - Body ground	Generator operate condition signal	Engine start Charge warning light ON	Below 1 V
			Engine start Charge warning light OFF	10 to 14 V
PKB* (E7-2) - Body ground	W-R* - Body ground	Parking brake switch signal	Parking brake switch ON	Below 1 V
			Parking brake switch OFF	10 to 14 V
BCTY (E7-7) - Body ground	W - Body ground	Back door courtesy switch and back window courtesy switch input	Back door or back window open	Below 1 V
			Back door and back window closed	11 to 14 V
RLCY (E7-11) - Body ground	P-B - Body ground	Rear LH door courtesy switch input	Rear LH door open	Below 1 V
			Rear LH door closed	11 to 14 V

Symbols (Terminal No.)	Wiring Color	Terminal Description	Condition	Specified Condition
RRCY (E7-12) - Body ground	P-L - Body ground	Rear RH door courtesy switch input	Rear RH door open	Below 1 V
			Rear RH door closed	11 to 14 V
DCTY (E7-23) - Body ground	R-B - Body ground	Driver door courtesy switch input	Driver door open	Below 1 V
			Driver door closed	11 to 14 V
PCTY (E7-24) - Body ground	G-Y - Body ground	Front passenger door courtesy switch input	Front passenger door open	Below 1 V
			Front passenger door closed	11 to 14 V
HEAD (E8-1) - Body ground	R - Body ground	Light control switch (HEAD signal)	Light control switch OFF	11 to 14 V
			Light control switch is ON	Below 1 V
HU* (E8-2) - Body ground	R-G* - Body ground	Headlight dimmer switch (HIGH signal)	Headlight dimmer switch in HIGH	Below 1 V
			Headlight dimmer switch in LOW	11 to 14 V
HF (E8-7) - Body ground	R-W - Body ground	Headlight dimmer switch (FLASH signal)	Headlight dimmer switch in FLASH	Below 1 V
			Headlight dimmer switch in LOW or HIGH	11 to 14 V
TAIL (E8-8) - Body ground	G - Body ground	Light control switch (TAIL signal)	Light control switch in TAIL	Below 1 V
			Light control switch OFF	11 to 14 V
DRLP (E8-12) - Body ground	V-Y - Body ground	Open door warning light output	Open door warning light ON	Below 1.2 V
			Open door warning light OFF	10 to 14 V
HF2 (E8-20) - Body ground	Y-P - Body ground	Headlight dimmer switch (FLASH signal)	Headlight dimmer switch in FLASH	Below 1 V
			Headlight dimmer switch in LOW or HIGH	10 to 14 V

HINT:
*: w/ daytime running light system
If the result is not as specified, there may be a malfunction in the wire harness.

DATA LIST / ACTIVE TEST

1. READ DATA LIST

HINT:

Using the intelligent tester's DATA LIST allows a switch, sensor, actuator and other item values to be read without removing any parts. Reading the DATA LIST early in troubleshooting is one way to save time.

(a) Connect the intelligent tester with CAN VIM to the DLC3.

(b) Turn the ignition switch ON.

(c) Read the DATA LIST according to the prompts displayed on the tester.

BODY:

Item	Measurement Item/Dispay (Range)	Normal Condition	Diagnostic Note
D DOR CTY SW	Driver door courtesy switch signal/ON or OFF	ON :Driver door is open OFF: Driver door is closed	-
P DOR CTY SW	Front passenger door courtesy switch signal/ON or OFF	ON: Front passenger door is open OFF: Front passenger door is closed	-
Rr DOR CTY SW	Rear door courtesy switch signal/ ON or OFF	ON: Either right or left rear door is open OFF: Both right and left rear doors are closed	-
LUGG COURTSY SW	Back door and back window courtesy switch signal/ON or OFF	ON: Either back door or back window is open OFF: Both back door and back window are closed	-
DIMMER SW	Dimmer switch signal/ON or OFF	ON: Dimmer switch is ON (High Beam) or High flasher switch is ON OFF: Dimmer switch is OFF (Low Beam) or High flasher switch is OFF	-
HIGH FLASER SW	High flasher switch signal/ON or OFF	ON: High flasher switch is ON OFF: High flasher switch is OFF	-
HEAD LIGHT SW	Head light switch signal/ON or OFF	ON: Light control switch is in HEAD position OFF: Light control switch is not in HEAD position	-
TAIL LIGHT SW	Taillight switch signal/ON or OFF	ON: Light control switch is in TAIL or HEAD position OFF: Light control switch is OFF	-
ALT L SIG	Generator L terminal signal/ON or OFF	ON: Engine start Charge warning light is OFF OFF: Engine start Charge warning light is ON	-

2. PERFORM ACTIVE TEST

HINT:

Performing the intelligent tester's ACTIVE TEST allows relays, VSV, actuators and other items to be operated without removing any parts. Performing the ACTIVE TEST early in troubleshooting is one way to save time. The DATA LIST can be displayed during the ACTIVE TEST.

(a) Connect the intelligent tester with CAN VIM to the DLC3.

(b) Turn the ignition switch ON.
(c) Perform the ACTIVE TEST according to the prompts displayed on the tester.

BODY:

Item	Test Details/ Display (Range)	Diagnostic Note
ILLUMI OUTPUT	Illuminated Entry System ON/OFF	-
HAZARD	Hazard ON/OFF	-
TAIL LIGHT	Taillight Relay ON/OFF	-
HEAD LIGHT	Headlight Relay ON/OFF	-
HEAD LIGHT(HI)*	Headlight (High) ON / OFF	-
DRL RLY*	DRL relay ON/OFF	-
DOME RLY CUT	DOME relay cut ON/OFF	-
OPN DOR WRN LGT	Open door warning light ON/OFF	-

HINT:
*: w/ Daytime running light system

Stop Light Switch Circuit

DESCRIPTION

When the stop light switch is turned on, the current flows to the stop lights to illuminate.

WIRING DIAGRAM

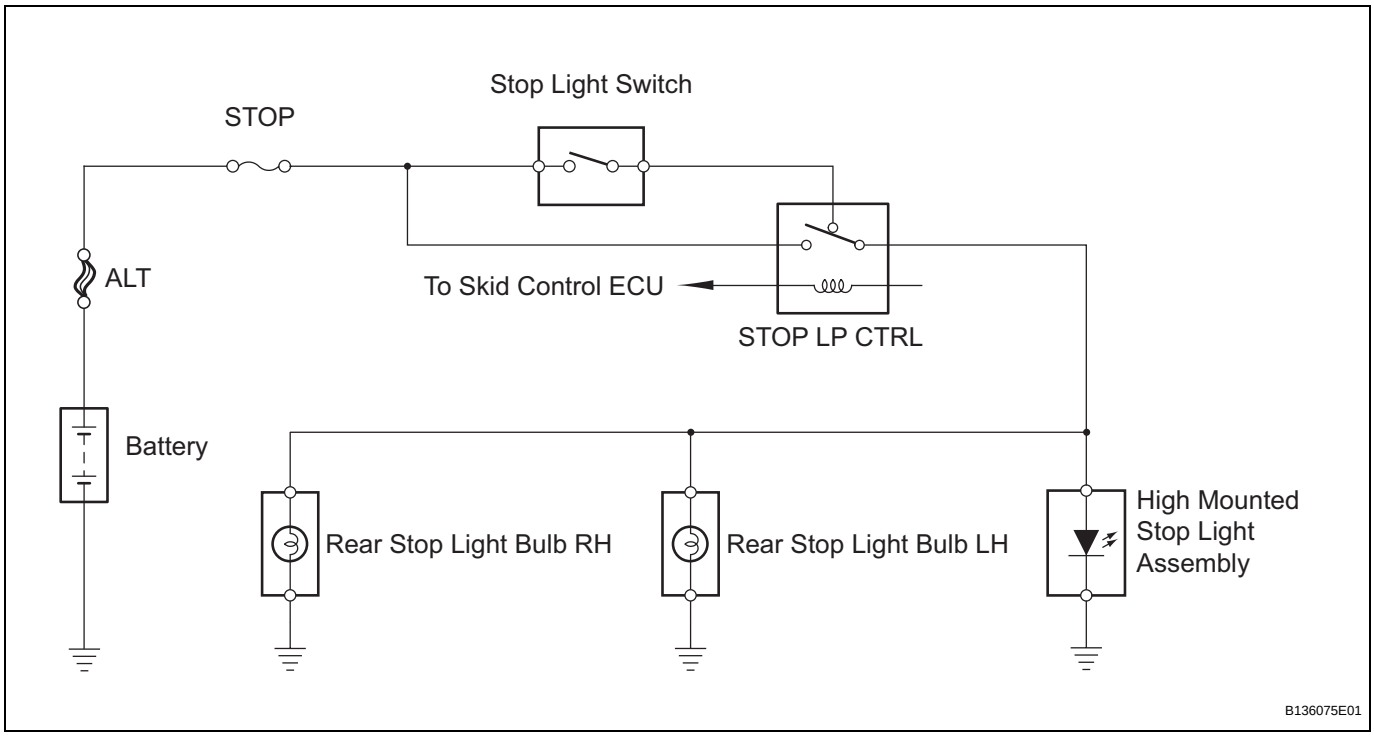

INSPECTION PROCEDURE

1	INSPECT FUSE (STOP)

(a) Remove the STOP fuse from the engine room R/B No. 2.
(b) Measure the resistance.
Standard resistance:
Below 1 Ω
(c) Reinstall the STOP fuse.

NG → **REPLACE FUSE**

OK

2 INSPECT BULB (REAR STOP LIGHT BULB)

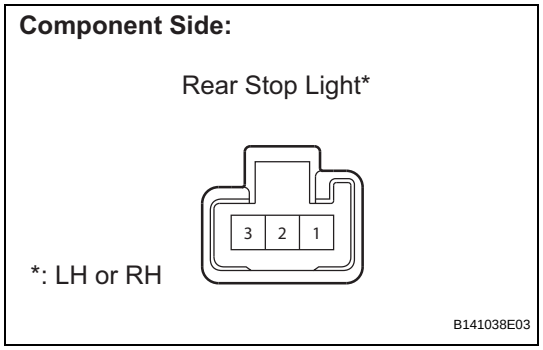

(a) Remove the rear stop light bulbs.

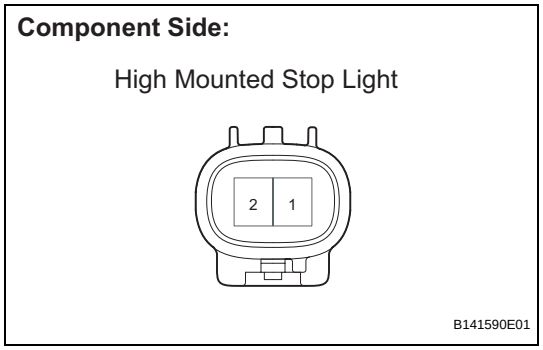

(b) Remove the high mounted stop light assembly.
(c) Apply battery voltage to the terminals and check that the rear stop light and high mounted stop light illuminates.

Standard

Rear stop light

Measurement Condition	Standard
Positive battery - Terminal 3 Negative battery - Terminal 1	Stop light bulb illuminates

High mounted stop light

Measurement Condition	Standard
Positive battery - Terminal 2 Negative battery - Terminal 1	High mounted stop light illuminates

(d) Reinstall the rear stop light bulbs.
(e) Reinstall the high mounted stop light assembly.

NG → REPLACE BULB

OK

3 INSPECT STOP LIGHT SWITCH

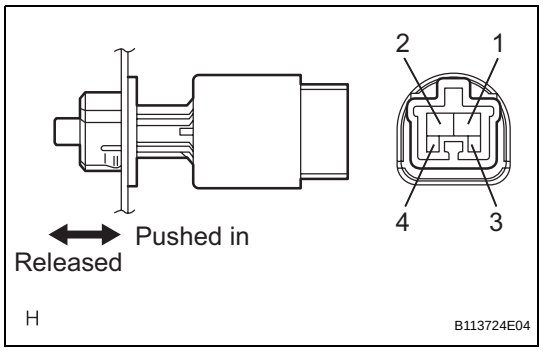

(a) Remove the stop light switch.
(b) Measure the resistance.

Standard resistance

Tester Connection	Condition	Specified Condition
1 - 2	Switch pin released	Below 1 Ω
3 - 4	Switch pin pushed in	10 kΩ or higher
1 - 2	Switch pin pushed in	10 kΩ or higher
3 - 4	Switch pin released	Below 1 Ω

(c) Reinstall the stop light switch.

NG → REPLACE STOP LIGHT SWITCH

OK

4	INSPECT STOP LP CTRL RELAY

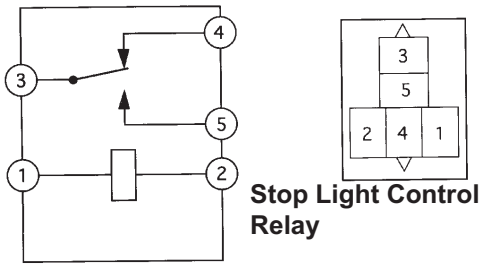

(a) Remove the STOP LP CTRL relay from the engine room R/B No. 2
(b) Measure the resistance.
Standard resistance

Tester Connection	Specified Condition
3 - 4	Below 1 Ω
3 - 5	10 kΩ or higher
3 - 4	10 kΩ or higher (When battery voltage is applied between terminals 1 and 2)
3 - 5	Below 1 Ω (When battery voltage is applied between terminals 1 and 2)

(c) Reinstall the STOP LP CTRL relay.

NG → **REPLACE STOP LP CTRL RELAY**

OK

LI

5	CHECK HARNESS AND CONNECTOR (FUSE - STOP LIGHT SWITCH)

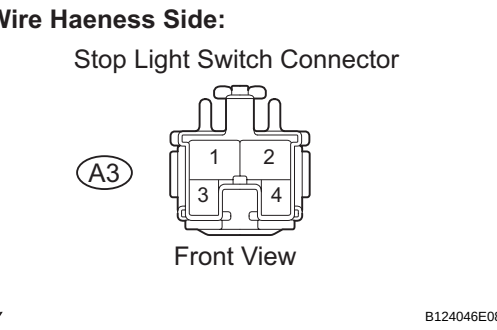

(a) Disconnect the A3 stop light switch connector.
(b) Measure the voltage.
Standard voltage

Tester Connection	Condition	Specified Condition
A3-2 - Body ground	Always	11 to 14 V

(c) Reconnect the stop light switch connector.

NG → **REPAIR OR REPLACE HARNESS OR CONNECTOR**

OK

6	**CHECK HARNESS AND CONNECTOR (STOP LIGHT SWITCH - STOP LIGHT CONTROL RELAY)**

Wire Harness Side:

Stop Light Switch Connector

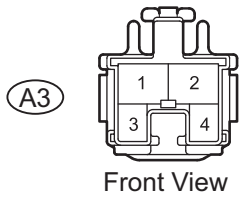

Front View

Engine Room R/B No. 2:

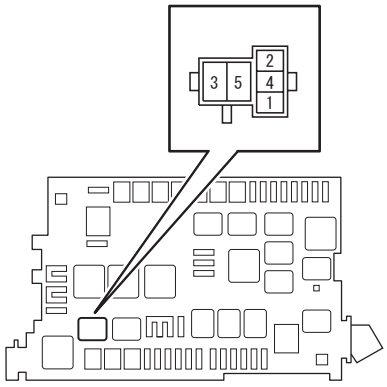

B136076E01

OK

(a) Disconnect the A3 stop light switch connector.
(b) Remove the STOP LP CTRL relay from the engine room R/B No. 2.
(c) Measure the resistance.

Standard resistance

Tester Connection	Specified Condition
A3-1 - STOP LP CTRL relay terminal 5	Below 1 Ω
A3-1 or STOP LP CTRL relay terminal 5 - Body ground	10 kΩ or higher

(d) Reconnect the stop light switch connector.
(e) Reinstall the STOP LP CTRL relay.

NG → **REPAIR OR REPLACE HARNESS OR CONNECTOR**

LI

7	**CHECK HARNESS AND CONNECTOR (STOP LIGHT CONTROL RELAY - REAR STOP LIGHT)**

Engine Room R/B No. 2:

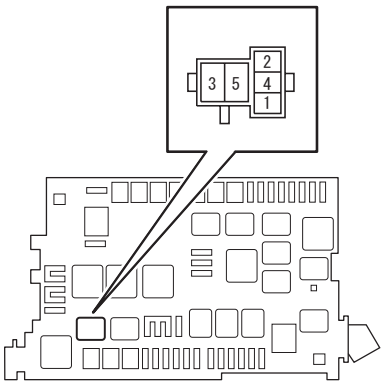

Wire Harness Side:

Rear Stop Light Connector

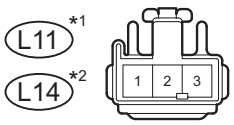

Front View

*1: LH
*2: RH

High Mounted Stop Light Connector

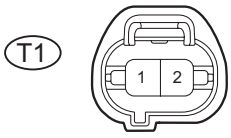

Front View

B136077E01

(a) Remove the STOP LP CTRL relay from the engine room R/B No. 2
(b) Disconnect the L11 and L14 rear stop light connectors.
(c) Disconnect the T1 high mounted stop light connector.
(d) Measure the resistance.

Standard resistance

Tester Connection	Specified Condition
STOP LP CTRL relay terminal 3 - L11-3	Below 1 Ω
STOP LP CTRL relay terminal 3 - L14-3	Below 1 Ω
STOP LP CTRL relay terminal 3 - T1-2	Below 1 Ω
STOP LP CTRL relay terminal 3 - Body ground	10 kΩ or higher

(e) Reinstall the STOP LP CTRL relay.
(f) Reconnect the stop light connectors.
(g) Reconnect the high mounted stop light connector.

NG → **REPAIR OR REPLACE HARNESS OR CONNECTOR**

OK

REPAIR OR REPLACE HARNESS OR CONNECTOR (REAR STOP LIGHT - BODY GROUND)

Headlight Relay Circuit

DESCRIPTION

The headlight dimmer switch sends a signal to the main body ECU.

WIRING DIAGRAM

w/o Daytime running light system:

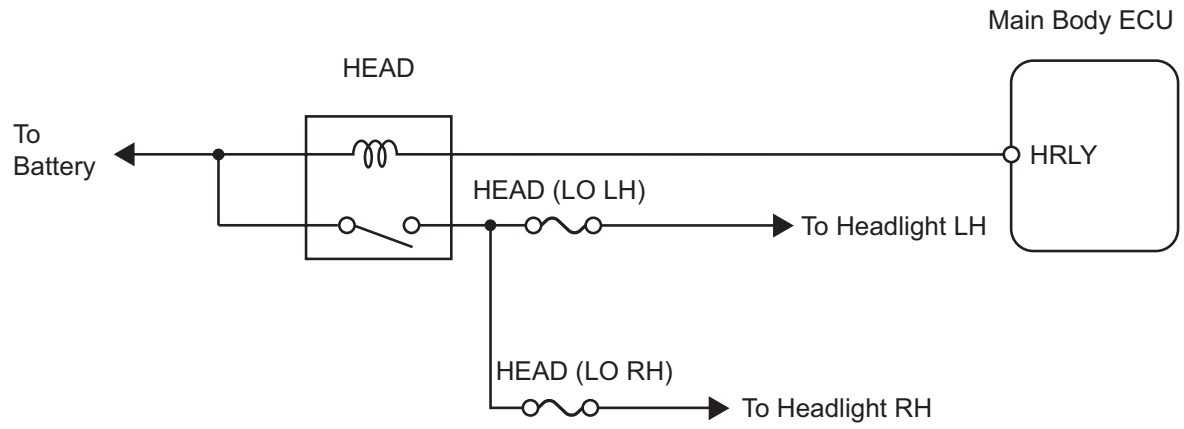

w/ Daytime running light system:

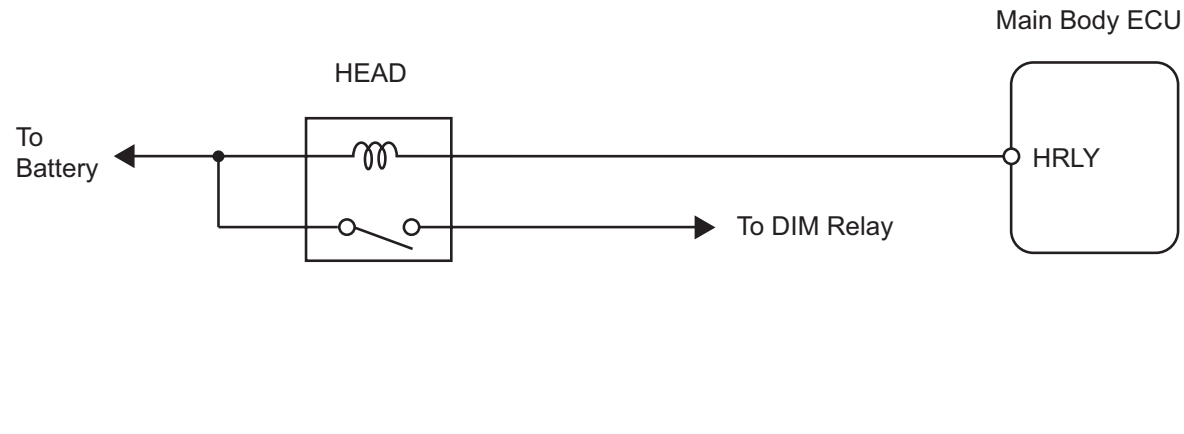

INSPECTION PROCEDURE

1	PERFORM ACTIVE TEST BY INTELLIGENT TESTER (HEAD LIGHT)

(a) Connect the intelligent tester with CAN VIM to the DLC3.
(b) Turn the ignition switch ON.
(c) Turn the intelligent tester main switch on.
(d) Select the item below in the ACTIVE TEST and then check the relay operation.

BODY

Item	Test Details	Diagnostic Note
HEAD LIGHT	Headlight relay ON / OFF	-

OK:
Headlight assembly (low) illuminates.

OK	**PROCEED TO NEXT CIRCUIT INSPECTION SHOWN IN PROBLEM SYMPTOMS TABLE**

NG

2 INSPECT HEADLIGHT RELAY

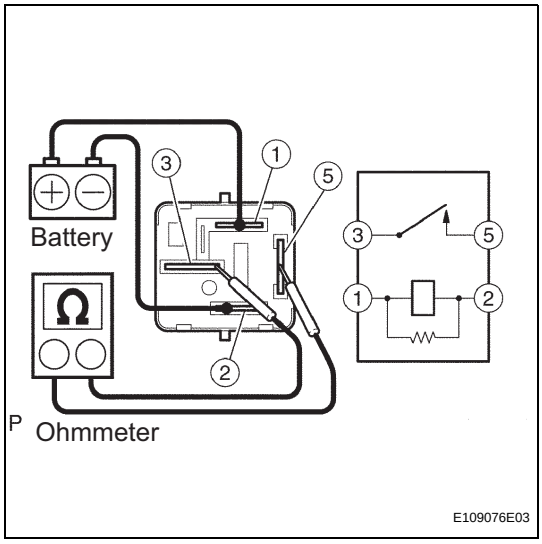

(a) Remove the HEAD relay from the engine room R/B No. 2.
(b) Measure the resistance.
Standard resistance

Tester connection	Specified Condition
3 - 5	10 kΩ or higher
3 - 5	Below 1 Ω (When battery voltage is applied between terminals 1 and 2)

(c) Reinstall the HEAD relay.

NG	**REPLACE HEADLIGHT RELAY**

OK

3 CHECK HARNESS AND CONNECTOR (BATTERY - HEADLIGHT RELAY)

Engine Room R/B No. 2:

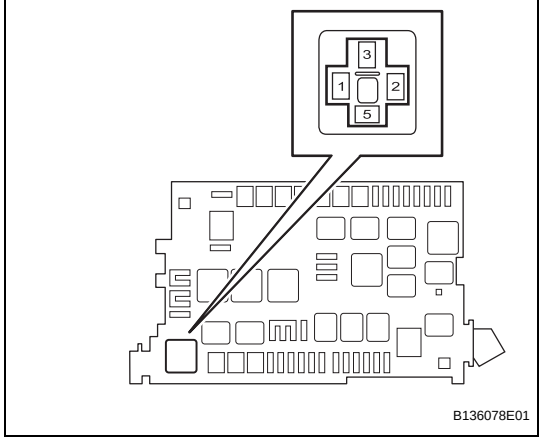

(a) Remove the HEAD relay from the engine room R/B No. 2.
(b) Measure the voltage.
Standard voltage

Tester connection	Condition	Specified Condition
HEAD relay terminal 1 - Body ground	Always	11 to 14 V

(c) Reinstall the HEAD relay.

NG	**REPAIR OR REPLACE HARNESS OR CONNECTOR**

OK

LI

4	CHECK HARNESS AND CONNECTOR (HEADLIGHT RELAY - MAIN BODY ECU)

Wire Harness Side:

Main Body ECU Connector

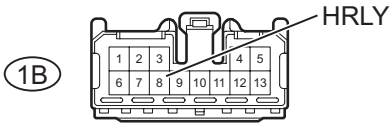

Front View

Engine Room R/B No. 2:

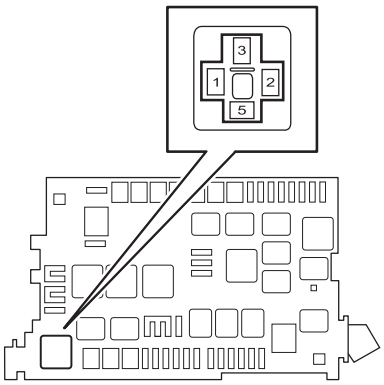

B136079E01

(a) Remove the HEAD relay from the engine room R/B No. 2.
(b) Disconnect the 1B main body ECU connector.
(c) Measure the resistance.

Standard resistance

Tester connection	Specified Condition
HEAD relay terminal 2 - 1B-8 (HRLY)	Below 1 Ω
HEAD relay terminal 2 or 1B-8 (HRLY) - Body ground	10 kΩ or higher

(d) Reinstall the HEAD relay.
(e) Reconnect the main body ECU connector.

NG → **REPAIR OR REPLACE HARNESS OR CONNECTOR**

OK

PROCEED TO NEXT CIRCUIT INSPECTION SHOWN IN PROBLEM SYMPTOMS TABLE

LI

DRL Relay Circuit

SYSTEM DESCRIPTION

The main body ECU controls the DRL relay.

WIRING DIAGRAM

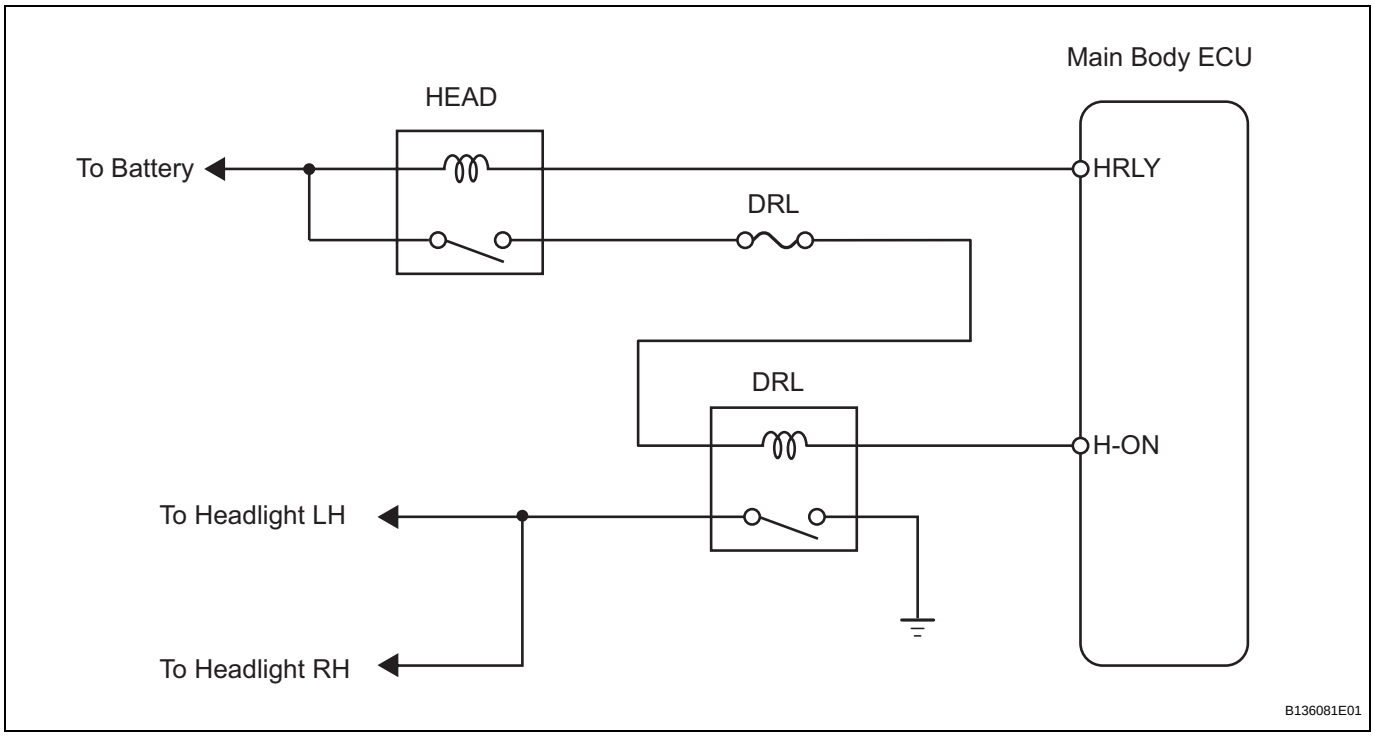

INSPECTION PROCEDURE

1	PERFORM ACTIVE TEST BY INTELLIGENT TESTER (DRL RLY)

(a) Connect the intelligent tester with CAN VIM to the DLC3.
(b) Turn the ignition switch ON.
(c) Turn the intelligent tester main switch on.
(d) Select the item below in the ACTIVE TEST and then check the relay operation.

BODY

Item	Test Details	Diagnostic Note
DRL RLY	DRL relay ON / OFF	-

OK:
Headlight assembly (low) illuminates.

OK → **PROCEED TO NEXT CIRCUIT INSPECTION SHOWN IN PROBLEM SYMPTOMS TABLE**

NG

2	INSPECT FUSE (DRL FUSE)

(a) Remove the DRL fuse from the engine room R/B No. 2.

(b) Measure the resistance.

Standard resistance:

Below 1 Ω

(c) Reinstall the DRL fuse.

NG → **REPLACE FUSE**

OK

3 INSPECT DAYTIME RUNNING LIGHT RELAY

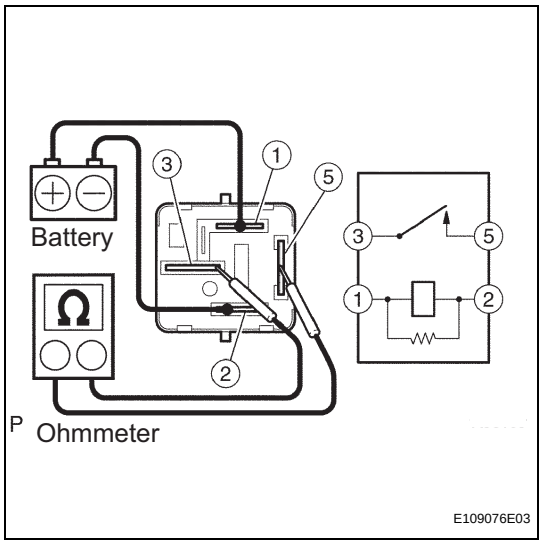

(a) Remove the DRL relay from the engine room R/B No. 4.

(b) Measure the resistance.

Standard resistance

Tester Connection	Specified Condition
3 - 5	10 kΩ or higher
3 - 5	Below 1 Ω (When battery voltage is applied between terminals 1 and 2)

(c) Reinstall the DRL relay.

NG → **REPLACE DAYTIME RUNNING LIGHT RELAY**

OK

4 CHECK HARNESS AND CONNECTOR (BATTERY - DAYTIME RUNNING LIGHT RELAY)

Engine Room R/B No. 4:

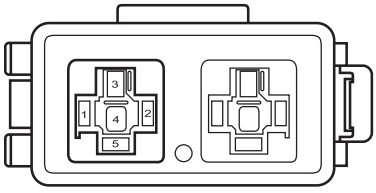

(a) Remove the DRL relay from the engine room R/B No. 4.

(b) Measure the voltage.

Standard voltage

Tester connection	Condition	Specified Condition
DRL relay terminal 1 - Body round	Light control switch is in HEAD position	11 to 14 V
DRL relay terminal 1 - Body round	Light control switch is in OFF or TAIL position	Below 1 V

(c) Reinstall the DRL relay.

NG → **REPAIR OR REPLACE HARNESS OR CONNECTOR**

OK

5	CHECK HARNESS AND CONNECTOR (DAYTIME RUNNING LIGHT RELAY - MAIN BODY ECU)

Wire Harness Side:

Main Body ECU Connector

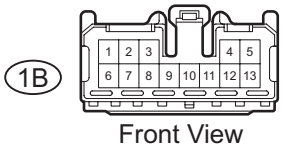

Front View

Engine Room R/B No. 4:

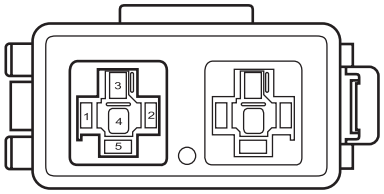

B136083E01

(a) Remove the DRL relay from the engine room R/B No. 4.
(b) Disconnect the 1B main body ECU connector.
(c) Measure the resistance.

Standard resistance

Tester Connection	Specified Condition
DRL relay terminal 2 - 1B-3 (H-ON)	Below 1 Ω
DRL relay terminal 2 or 1B-3 (H-ON) - Body ground	10 kΩ or higher

(d) Reinstall the DRL relay.
(e) Reconnect the main body ECU connector.

NG → **REPAIR OR REPLACE HARNESS OR CONNECTOR**

OK

6	CHECK HARNESS AND CONNECTOR (DAYTIME RUNNING LIGHT RELAY - HEADLIGHT, BODY GROUND)

Wire Harness Side:

Headlight Connector

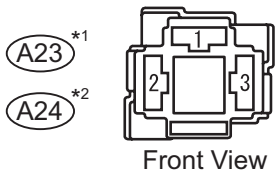

Front View

*1: LH
*2: RH

Engine Room R/B No. 4:

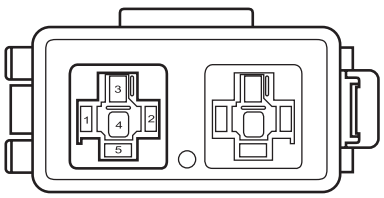

B136084E01

(a) Remove the DRL relay from the engine room R/B No. 4.
(b) Disconnect the A23 and A24 headlight connectors.
(c) Measure the resistance.

Standard resistance

Tester Connection	Specified Condition
DRL relay terminal 3 - A23-3	Below 1 Ω
DRL relay terminal 3 or A23-3 - Body ground	10 kΩ or higher
DRL relay terminal 3 - A24-3	Below 1 Ω
DRL relay terminal 3 or A24-3 - Body ground	10 kΩ or higher
DRL relay terminal 5 - Body ground	Below 1 Ω

(d) Reinstall the DRL relay.
(e) Reconnect the headlight connectors.

NG → **REPAIR OR REPLACE HARNESS OR CONNECTOR**

OK

PROCEED TO NEXT CIRCUIT INSPECTION SHOWN IN PROBLEM SYMPTOMS TABLE

Turn Signal Light Circuit

DESCRIPTION

The turn signal flasher relay turns on when it receives signals from the headlight dimmer switch integrated with the turn signal switch, causing the turn signal lights to flash.

WIRING DIAGRAM

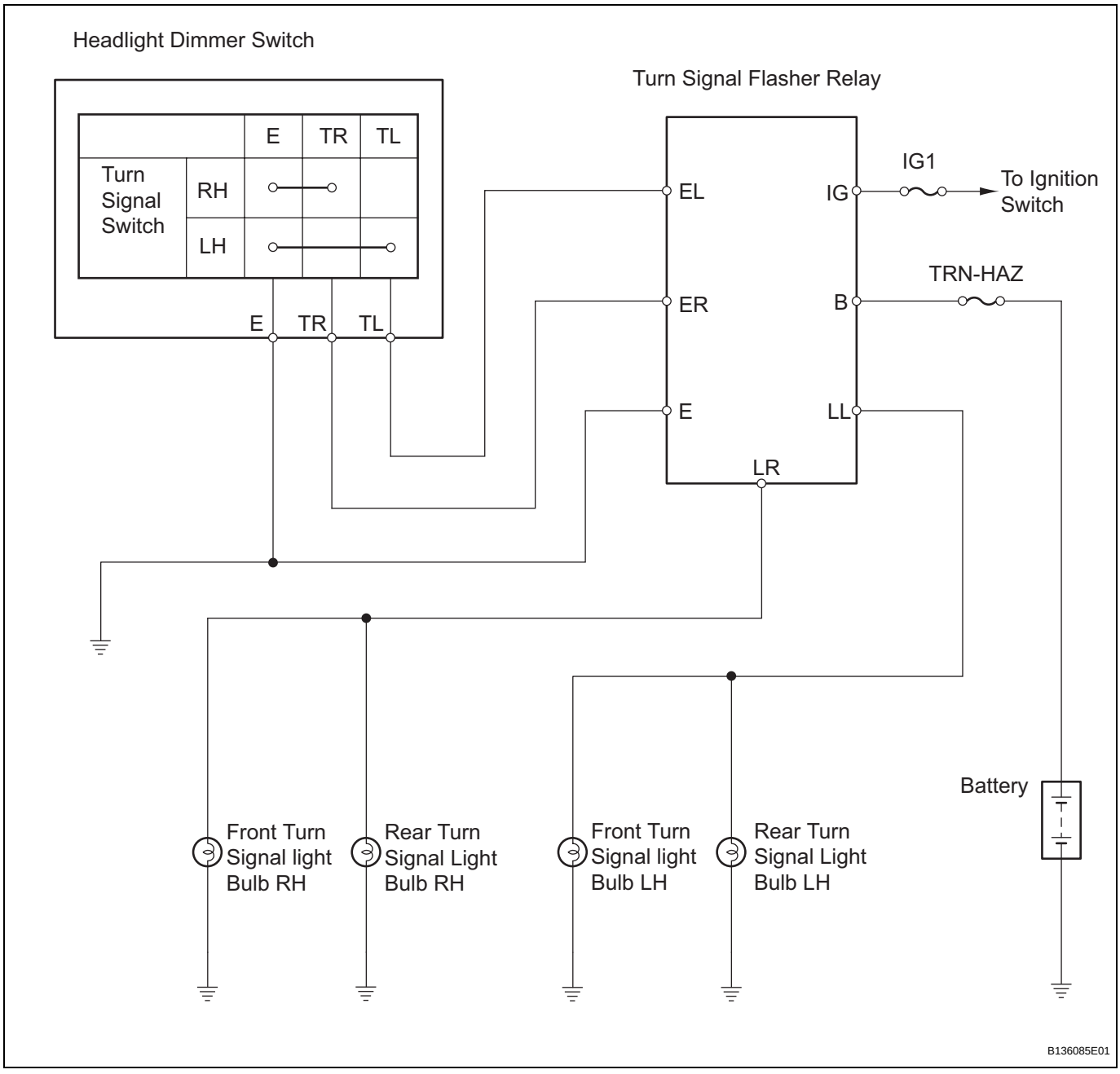

INSPECTION PROCEDURE

1	**CHECK OPERATION (TURN SIGNAL LIGHT)**

(a) When the turn signal light switch is operated, check that the appropriate turn signal light flashes.

Result

Condition	Proceed to
No lights flash	A
Front turn signal light (LH or RH) does not flash	B
Rear turn signal light (LH or RH) does not flash	C

B → Go to step 8

C → Go to step 10

A

2 INSPECT FUSE (IG1, TRN-HAZ)

(a) Remove the IG1 fuse from the main body ECU.
(b) Remove the TRN-HAZ fuse from the engine room R/B No.2.
(c) Measure the resistance.
Standard resistance:
Below 1 Ω
(d) Reinstall the IG1 and TRN-HAZ fuses.

NG → REPLACE FUSE

OK

3 INSPECT TURN SIGNAL FLASHER RELAY

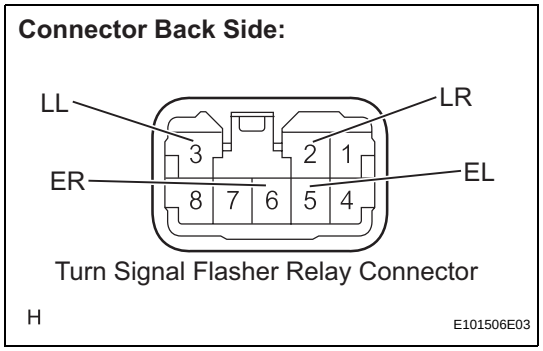

(a) Measure the voltage.
Standard voltage

Tester Connection	Condition	Specified Condition
2 (LR) - Body ground	Turn signal switch (right turn) OFF → ON	0 V → 11 to 14 V (60 to 120 times per minute)
3 (LL) - Body ground	Turn signal switch (left turn) OFF → ON	0 V → 11 to 14 V (60 to 120 times per minute)
5 (EL) - Body ground	Turn signal switch (left turn) OFF → ON	11 to 14 V → 0 V
6 (ER) - Body ground	Turn signal switch (right turn) OFF → ON	11 to 14 V → 0 V

NG → REPLACE TURN SIGNAL FLASHER RELAY

OK

LI

4 CHECK HARNESS AND CONNECTOR (FUSE - TURN SIGNAL FLASHER RELAY)

Wire Harness Side:

Turn Signal Flasher Relay Connector

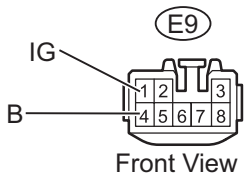

E120966E07

(a) Disconnect the E9 turn signal flasher relay connector.
(b) Measure the voltage.
Standard voltage

Tester Connection	Condition	Specified Condition
E9-1(IG) - Body ground	Ignition switch ON	11 to 14 V
E9-4 (B) - Body ground	Always	11 to 14 V

(c) Reconnect the turn signal flasher relay connector.

NG → **REPAIR OR REPLACE HARNESS OR CONNECTOR**

OK

5 INSPECT HEADLIGHT DIMMER SWITCH

Component Side:

Headlight Dimmer Switch

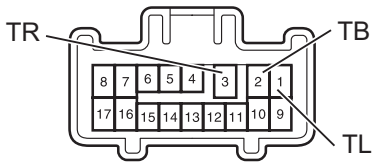

B136086E01

(a) Remove the headlight dimmer switch.
(b) Inspect the turn signal light switch.
(c) Measure the resistance.
Standard resistance

Tester Connection	Condition	Specified Condition
2 (TB) - 3 (TR)	Right	Below 1 Ω
2 (TB) - 3 (TR)	Neutral	10 kΩ or higher
2 (TB) - 1 (TL)	Left	Below 1 Ω
2 (TB) - 1 (TL)	Neutral	10 kΩ or higher

(d) Reinstall the headlight dimmer switch.

NG → **REPLACE HEADLIGHT DIMMER SWITCH**

OK

LI

6	CHECK HARNESS AND CONNECTOR (TURN SIGNAL FLASHER RELAY - HEADLIGHT DIMMER SWITCH)

Wire Harness Side:

Headlight Dimmer Switch Connector

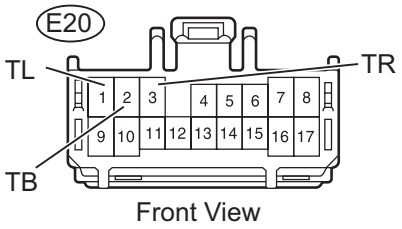

Turn Signal Flasher Relay Connector

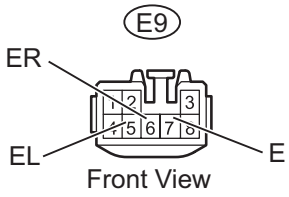

B136087E01

(a) Disconnect the E20 headlight dimmer switch connector.
(b) Disconnect the E9 turn signal flasher relay connector.
(c) Measure the resistance.
Standard resistance

Tester Connection	Specified Condition
E20-2 (TB) - E9 -7 (E)	Below 1 Ω
E20-2 (TB) or E9 -7 (E) - Body ground	10 kΩ or higher
E20-1 (TL) - E9-5 (EL)	Below 1 Ω
E20-1 (TL) or E9-5 (EL) - Body ground	10 kΩ or higher
E20-3 (TR) - E9-6 (ER)	Below 1 Ω
E20-3 (TR) or E9-6 (ER) - Body ground	10 kΩ or higher

(d) Reconnect the headlight dimmer switch connector.
(e) Reconnect the turn signal flasher relay connector.

NG → **REPAIR OR REPLACE HARNESS OR CONNECTOR**

OK

7	CHECK HARNESS AND CONNECTOR (TURN SIGNAL FLASHER RELAY - BODY GROUND)

Wire Harness Side:

Turn Signal Flasher Relay Connector

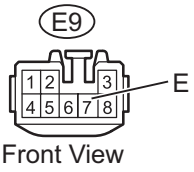

E120966E08

(a) Disconnect the E9 turn signal flasher relay connector.
(b) Measure the resistance.
Standard resistance

Tester Connection	Specified Condition
E9-7 (E) - Body ground	Below 1 Ω

(c) Reconnect the turn signal flasher relay connector.

NG → **REPAIR OR REPLACE HARNESS OR CONNECTOR**

OK

REPAIR OR REPLACE HARNESS OR CONNECTOR (HEADLIGHT DIMMER SWITCH - BODY GROUND)

LI

8	**INSPECT BULB (FRONT TURN SIGNAL LIGHT BULB)**

Component Side:

Front Turn Signal Light*



*: LH or RH

B136088E01

(a) Remove the front turn signal light.
(b) Apply battery voltage to the terminals and check that the front turn signal light illuminates.
Standard

Measurement Condition	Standard
Positive battery - Terminal 3 Negative battery - Terminal 2	Front turn signal light illuminates

(c) Reinstall the front turn signal light.

NG → **REPLACE BULB**

OK

9	**CHECK HARNESS AND CONNECTOR (TURN SIGNAL FLASHER RELAY - FRONT TURN SIGNAL LIGHT)**

Wire Harness Side:

Front Turn Signal Light Connector

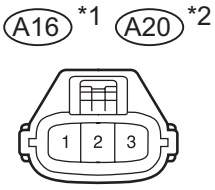

Front View

*1: LH

*2: RH

Turn Signal Flasher Relay Connector

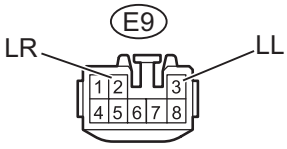

Front View

B136089E01

(a) Disconnect the E9 turn signal flasher relay connector.
(b) Disconnect the A16 and A20 front turn signal light connectors.
(c) Measure the resistance.
Standard resistance

Tester Connection	Specified Condition
E9-2 (LR) - A20-3	Below 1 Ω
E9-2 (LR) or A20-3 - Body ground	10 kΩ or higher
E9-3 (LL) - A16-3	Below 1 Ω
E9-3 (LL) or A16-3 - Body ground	10 kΩ or higher

(d) Reconnect the turn signal flasher relay connector.
(e) Reconnect the front turn signal light connectors.

NG → **REPAIR OR REPLACE HARNESS OR CONNECTOR**

OK

REPAIR OR REPLACE HARNESS OR CONNECTOR (FRONT TURN SIGNAL LIGHT - BODY GROUND)

10 INSPECT BULB (REAR TURN SIGNAL LIGHT BULB)

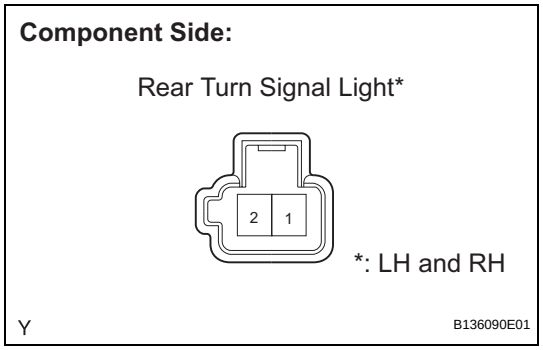

(a) Remove the rear turn signal light.
(b) Apply battery voltage to the terminals and check that the rear turn signal light illuminates.

Standard

Measurement Condition	Standard
Positive battery - Terminal 1 Negative battery - Terminal 2	Rear turn signal light illuminates

(c) Reinstall the rear turn signal light.

NG → **REPLACE BULB**

OK

11 CHECK HARNESS AND CONNECTOR (TURN SIGNAL FLASHER RELAY - REAR TURN SIGNAL LIGHT)

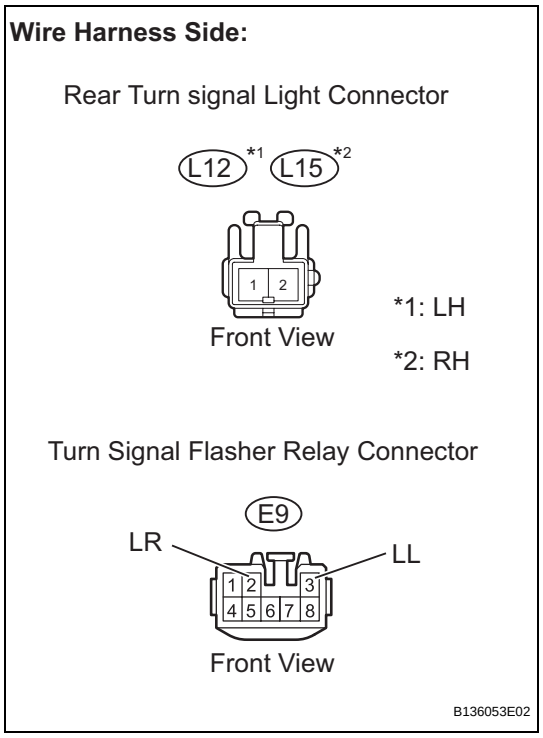

(a) Disconnect the E9 turn signal flasher relay connector.
(b) Disconnect the L12 and L15 rear turn signal light connectors.
(c) Measure the resistance.

Standard resistance

Tester Connection	Specified Condition
E9-2 (LR) - L15-1	Below 1 Ω
E9-2 (LR) or L15-1 - Body ground	10 kΩ or higher
E9-3 (LL) - L12-1	Below 1 Ω
E9-3 (LL) or L12-1 - Body ground	10 kΩ or higher

(d) Reconnect the turn signal flasher relay connector.
(e) Reconnect the rear turn signal light connectors.

NG → **REPAIR OR REPLACE HARNESS OR CONNECTOR**

OK

REPAIR OR REPLACE HARNESS OR CONNECTOR (REAR TURN SIGNAL LIGHT ASSEMBLY - BODY GROUND)

LI

Hazard Warning Switch Circuit

DESCRIPTION

When the hazard warning switch is turned on, the turn signal flasher relay turns on to flash the hazard warning signal lights.

WIRING DIAGRAM

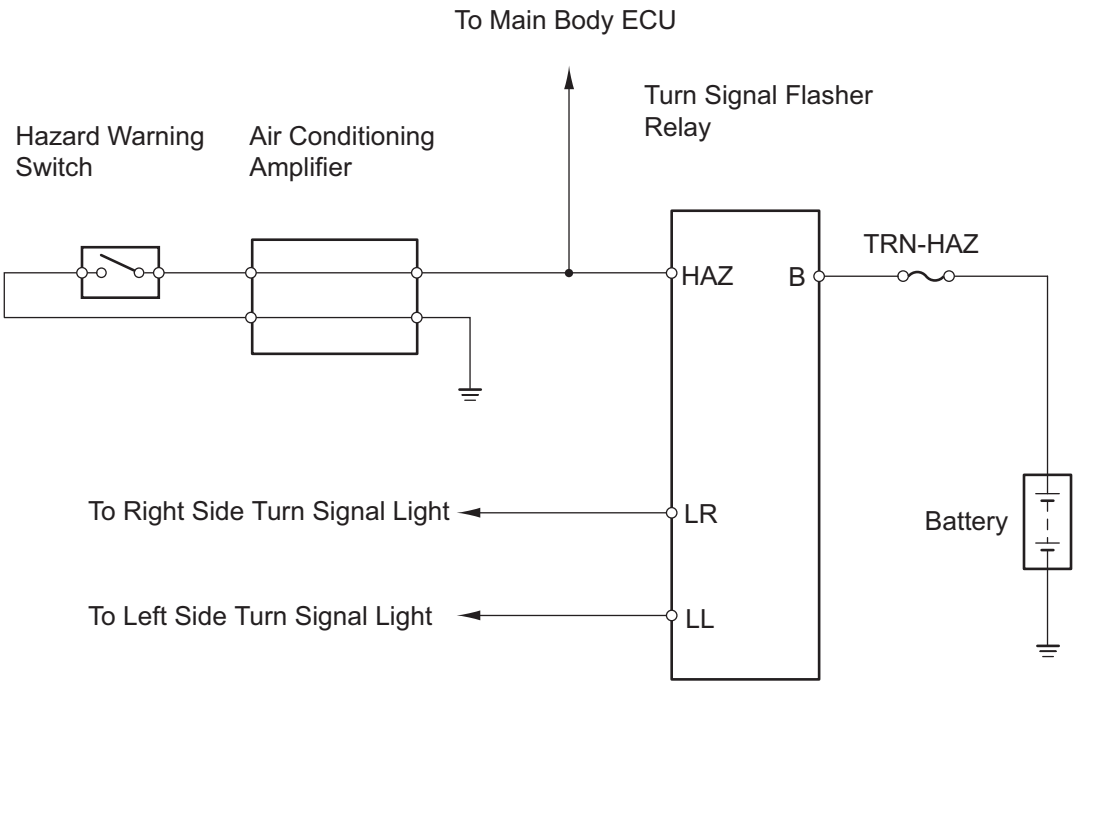

INSPECTION PROCEDURE

1	PERFORM ACTIVE TEST BY INTELLIGENT TESTER

(a) Connect the intelligent tester with CAN VIM to the DLC3.
(b) Turn the ignition switch ON.
(c) Turn the intelligent tester main switch on.
(d) Select the item below in the ACTIVE TEST and then check the relay operation.

BODY

Item	Test Details/Display (Range)	Diagnostic Note
HAZARD	HAZARD ON/OFF	-

OK:
All turn signal lights flash.

OK	Go to step 4

NG

2	INSPECT FUSE (TRN-HAZ)

(a) Remove the TRN-HAZ fuse from the engine room R/B No.2.
(b) Measure the resistance.
Standard resistance:
Below 1 Ω
(c) Reinstall the TRN-HAZ fuse.

NG → **REPLACE FUSE**

OK

3	CHECK HARNESS AND CONNECTOR (FUSE - TURN SIGNAL FLASHER RELAY - BODY GROUND)

Wire Harness Side:

Turn Signal Flasher Relay Connector

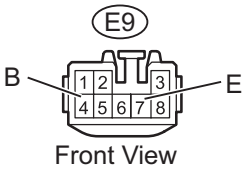

E120966E09

(a) Disconnect the E9 turn signal flasher relay connector.
(b) Measure the voltage.
Standard voltage

Tester Connection	Condition	Specified Condition
E9-4 (B) - Body ground	Always	11 to 14 V

(c) Measure the resistance.
Standard resistance

Tester Connection	Condition	Specified Condition
E9-7 (E) - Body ground	Always	Below 1 Ω

(d) Reconnect the turn signal flasher relay connector.

NG → **REPAIR OR REPLACE HARNESS OR CONNECTOR**

OK

REPLACE TURN SIGNAL FLASHER RELAY

LI

4	INSPECT AIR CONDITIONING AMPLIFIER ASSEMBLY (HAZARD WARNING SWITCH)

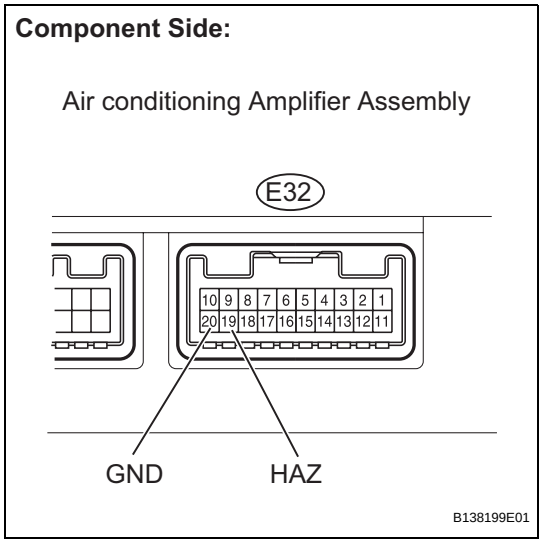

(a) Disconnect the E32 air conditioning amplifier connector.
(b) Measure the resistance.
Standard resistance

Tester Connection	Condition	Specified Condition
19 (HAZ) - 20 (GND)	Hazard warning switch OFF	10 kΩ or higher
19 (HAZ) - 20 (GND)	Hazard warning switch ON	Below 3 Ω

(c) Reconnect the air conditioning amplifier connector.

OK → **Go to step 6**

NG

5	INSPECT INTEGRATION CONTROL AND PANEL ASSEMBLY (HAZARD WARNING SWITCH)

(a) Temporarily replace the integration control and panel assembly with a new or normally functioning one.
(b) Check the hazard warning switch operation.

OK:
All turn signal lights flash.

NG → **REPLACE AIR CONDITIONING AMPLIFIER ASSEMBLY**

OK

END (INTEGRATION CONTROL AND PANEL ASSEMBLY IS FAULTY)

6	CHECK HARNESS AND CONNECTOR (AIR CONDITIONING AMPLIFIER - MAIN BODY ECU, BODY GROUND)

Wire Harness Side:

Air Conditioning Amplifier Connector

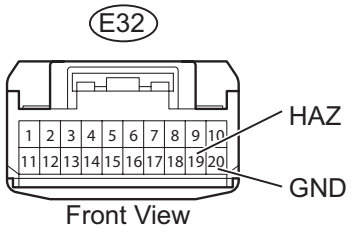

Main Body ECU Connector

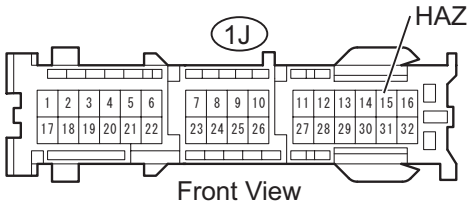

B136096E01

(a) Disconnect the E32 air conditioning amplifier connector.
(b) Disconnect the 1J main body ECU connector.
(c) Measure the resistance.

Standard resistance

Tester Connection	Specified Condition
E32-19 (HAZ) - 1J-15 (HAZ)	Below 1 Ω
E32-19 (HAZ) or 1J-15 (HAZ) - Body ground	10 kΩ or higher
E32-20 (GND) - Body ground	Below 1 Ω

(d) Reconnect the air conditioning amplifier connector.
(e) Reconnect the main body ECU connector.

NG → **REPAIR OR REPLACE HARNESS OR CONNECTOR**

OK

PROCEED TO NEXT CIRCUIT INSPECTION SHOWN IN PROBLEM SYMPTOMS TABLE

LI

Back-up Light Circuit

DESCRIPTION

A/T models: The park / neutral position switch turns on when the shift lever is moved into the R position, causing the back-up lights to illuminate.
M/T models: The back-up light switch turns on when the shift lever is moved into the R position, causing the back-up lights to illuminate.

WIRING DIAGRAM

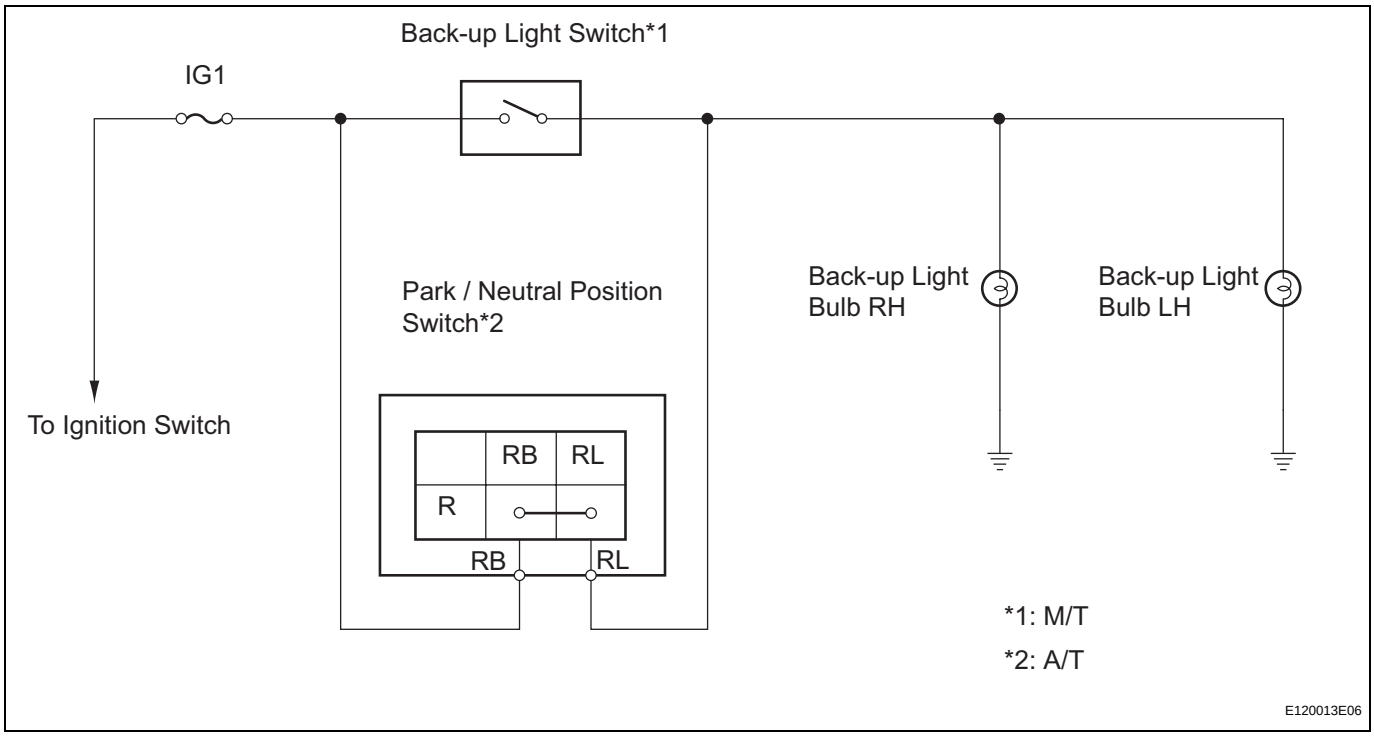

INSPECTION PROCEDURE

1	**INSPECT FUSE (IG1)**

(a) Remove the IG1 fuse from the main body ECU.
(b) Measure the resistance.
Standard resistance:
Below 1 Ω
(c) Reinstall the IG1 fuse.

NG → **REPLACE FUSE**

OK

2 INSPECT BULB (BACK-UP LIGHT BULB)

Component Side:

Back-up Light*

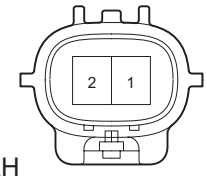

*: LH and RH

B141591E01

(a) Remove the back-up light bulb.
(b) Apply battery voltage to the terminals and check that the back-up light illuminates.
Standard

Measurement Condition	Standard
Positive battery - Terminal 1 Negative battery - Terminal 2	back-up light illuminates

(c) Reinstall the back-up light bulb.

NG → **REPLACE BULB**

OK

3 CHECK TRANSAXLE TYPE

(a) Check the vehicle's transaxle type.
Result

Transaxle Type	Proceed To
A/T	A
M/T	B

B → **Go to step 7**

A

4 INSPECT PARK / NEUTRAL POSITION SWITCH

Component Side:

Park / Neutral Position Switch

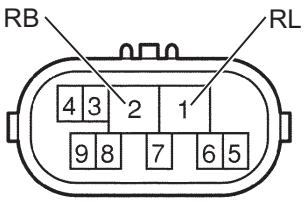

C110340E33

(a) Disconnect the B35 park / neutral position switch.
(b) Measure the resistance.
Standard resistance

Tester Connection	Shift Position	Specified Connection
2 (RB) - 1 (RL)	R	Below 1 Ω
2 (RB) - 1 (RL)	Except R	10 kΩ or higher

(c) Reconnect the park / neutral position switch.

NG → **REPLACE PARK / NEUTRAL POSITION SWITCH**

OK

5 CHECK HARNESS AND CONNECTOR (FUSE - PARK / NEUTRAL POSITION SWITCH)

Wire Harness Side:

Park / Neutral Position Switch Connector

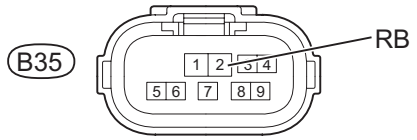

Front View

Y B124048E07

(a) Disconnect the B35 park / neutral position switch connector.
(b) Measure the voltage.
Standard voltage

Tester Connection	Condition	Specified Condition
B35-2 (RB) - Body ground	Ignition switch ON	11 to 14 V

(c) Reconnect the park / neutral position switch connector.

NG → **REPAIR OR REPLACE HARNESS OR CONNECTOR**

OK

6 CHECK HARNESS AND CONNECTOR (PARK / NEUTRAL POSITION SWITCH - REAR BACK-UP LIGHT)

LI

Wire Harness Side:

Back-up Light Connector

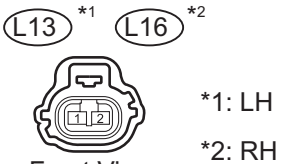

Front View

Park/ Neutral Position Switch Connector

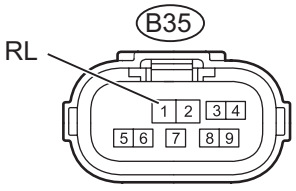

Front View

B138183E01

(a) Disconnect the B35 park / neutral position switch connector.
(b) Disconnect the L13 and L16 back-up light connectors.
(c) Measure the resistance.
Standard resistance

Tester Connection	Specified Condition
B35-1 (RL) - L13-1	Below 1 Ω
B35-1 (RL) - L16-1	Below 1 Ω
L13-1 - Body ground	10 kΩ or higher
L16-1 - Body ground	10 kΩ or higher

(d) Reconnect the park / neutral position switch connector.
(e) Reconnect the back-up light connectors.

NG → **REPAIR OR REPLACE HARNESS OR CONNECTOR**

OK

REPAIR OR REPLACE HARNESS OR CONNECTOR (BACK-UP LIGHT - BODY GROUND)

7 INSPECT BACK-UP LIGHT SWITCH

Component Side:

Back-up Light Switch



Y B135322E03

(a) Disconnect the B42 back-up light switch connector.
(b) Measure the resistance.
Standard resistance

Tester Connection	Shift Position	Specified Connection
1 - 2	R	Below 1 Ω
1 - 2	Except R	10 kΩ or higher

(c) Reconnect the back-up light switch connector.

NG → **REPLACE BACK-UP LIGHT SWITCH**

OK

8 CHECK HARNESS AND CONNECTOR (FUSE - BACK-UP LIGHT SWITCH)

Wire Harness Side:

Back-up Light Switch Connector

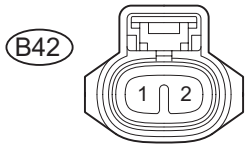

Front View

Y B135323E02

(a) Disconnect the B42 back-up light switch connector.
(b) Measure the voltage.
Standard voltage

Tester Connection	Condition	Specified Condition
B42-2 - Body ground	Ignition switch ON	11 to 14 V

(c) Reconnect the back-up light switch connector.

NG → **REPAIR OR REPLACE HARNESS OR CONNECTOR**

OK

LI

9	CHECK HARNESS AND CONNECTOR (BACK-UP LIGHT SWITCH - BACK-UP LIGHT)

Wire Harness Side:

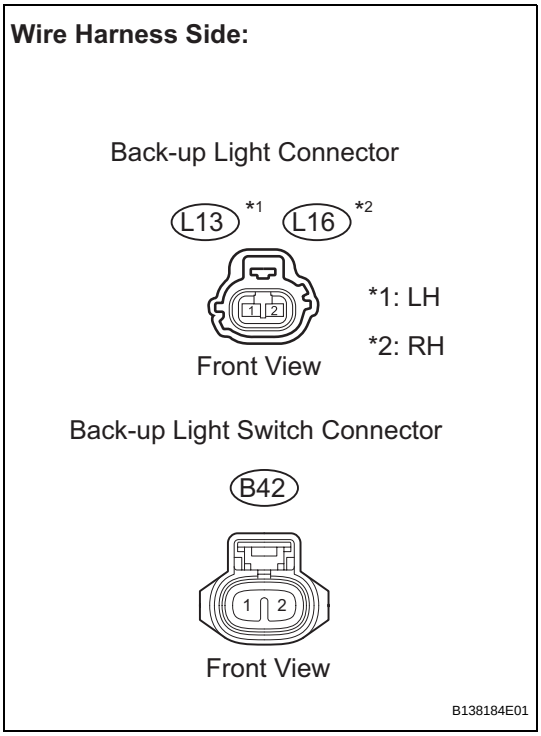

(a) Disconnect the B42 back-up light switch connector.
(b) Disconnect the L13 and L16 back-up light connectors.
(c) Measure the resistance.

Standard resistance

Tester Connection	Specified Condition
B42-1 - L13-1	Below 1 Ω
B42-1 - L16-1	Below 1 Ω
L13-1 - Body ground	10 kΩ or higher
L16-1 - Body ground	10 kΩ or higher

(d) Reconnect the back-up light switch connector.
(e) Reconnect the back-up light connectors.

NG → **REPAIR OR REPLACE HARNESS OR CONNECTOR**

OK

REPAIR OR REPLACE HARNESS OR CONNECTOR (BACK-UP LIGHT - BODY GROUND)

Light Control Switch Circuit

DESCRIPTION

This circuit detects the state of the headlight dimmer switch.

WIRING DIAGRAM

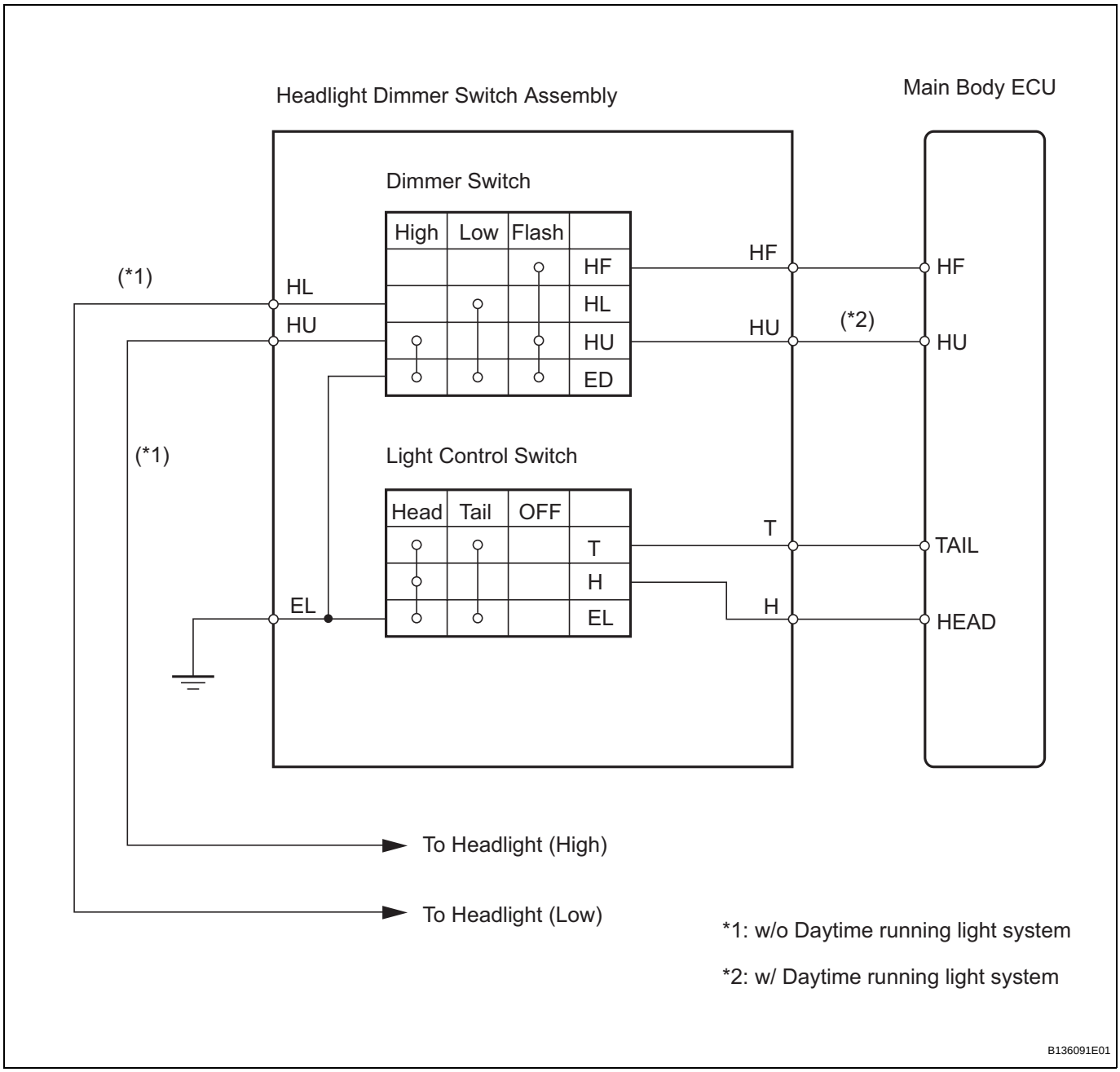

INSPECTION PROCEDURE

1	READ VALUE OF INTELLIGENT TESTER

(a) Connect the intelligent tester with CAN VIM to the DLC3.
(b) Turn the ignition switch ON.
(c) Turn the intelligent tester on.

(d) Select the item(s) in the DATA LIST, and read the display on the intelligent tester.

BODY

Item	Measurement Item / Display (Range)	Normal Condition	Diagnostic Note
HIGH FLASER SW	Passing light switch signal / ON or OFF	ON: Headlight dimmer switch is in FLASH (PASS) position OFF: Headlight dimmer switch is not in FLASH (PASS) position	-
DIMMER SW	Dimmer switch signal/ON or OFF	ON: Dimmer switch is ON (High Beam) or High flasher switch is ON OFF: Dimmer switch is OFF (Low Beam) or High flasher switch is OFF	-
HEAD LIGHT SW	Headlight control switch signal / ON or OFF	ON: Light control switch is in HEAD position OFF: Light control switch is not in HEAD position	-
TAIL LIGHT SW	Taillight switch signal / ON or OFF	ON: Light control switch is in TAIL or HEAD position OFF: Light control switch is in OFF position	-

LI

OK:
Condition information can be displayed.

OK → **PROCEED TO NEXT CIRCUIT INSPECTION SHOWN IN PROBLEM SYMPTOMS TABLE**

NG

2 INSPECT HEADLIGHT DIMMER SWITCH ASSEMBLY

Component Side:

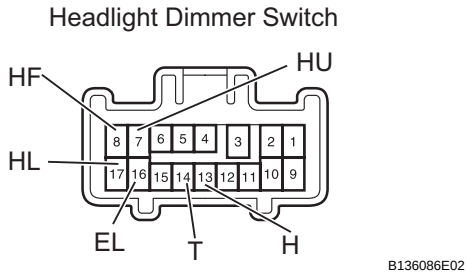

(a) Remove the headlight dimmer switch assembly.
(b) Measure the resistance.
(1) Light Control Switch:
Standard resistance

Tester Connection	Condition	Specified Condition
14 (T) - 16 (EL)	OFF	10 kΩ or higher
13 (H) - 16 (EL)		
14 (T) - 16 (EL)	TAIL	Below 1 Ω
13 (H) - 16 (EL)		10 kΩ or higher
14 (T) - 16 (EL)	HEAD	Below 1 Ω
13 (H) - 16 (EL)		Below 1 Ω

(2) Headlight Dimmer Switch Switch:
Standard resistance

Tester Connection	Condition	Specified Condition
7 (HU) - 16 (EL)	HIGH BEAM	Below 1 Ω
17 (HL) - 16 (EL)	LOW BEAM	Below 1 Ω
7 (HU) - 8 (HF) - 16 (EL)	FLASH	Below 1 Ω

(c) Reinstall the headlight dimmer switch assembly.

NG → REPLACE HEADLIGHT DIMMER SWITCH ASSEMBLY

OK

3 CHECK HARNESS AND CONNECTOR (HEADLIGHT DIMMER SWITCH - MAIN BODY ECU)

Wire Harness Side:

Main Body ECU Connector

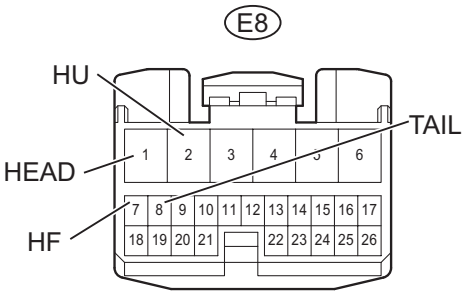

Front View

Headlight Dimmer Switch Assembly Connector

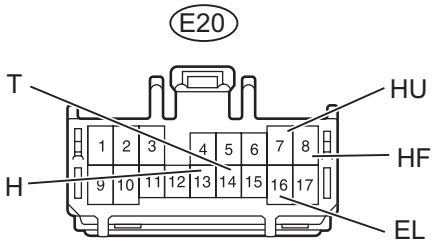

Front View

B138177E01

(a) Disconnect the E8 main body ECU connector.
(b) Disconnect the E20 headlight dimmer switch assembly connector.
(c) Measure the resistance.

Standard resistance

Tester Connection	Specified Condition
E20-8 (HF) - E8-7 (HF)	Below 1 Ω
E20-8 (HF) or E8-7 (HF) - Body ground	10 kΩ or higher
E20-14 (T) - E8-8 (TAIL)	Below 1 Ω
E20-14 (T) or E8-8 (TAIL) - Body ground	10 kΩ or higher
E20-13 (H) - E8-1 (HEAD)	Below 1 Ω
E20-13 (H) or E8-1 (HEAD) - Body ground	10 kΩ or higher
E20-7 (HU) - E8-2 (HU)*	Below 1 Ω
E20-7 (HU) or E8-2 (HU)* - Body ground	10 kΩ or higher
E20-16 (EL) - Body ground	Below 1 Ω

HINT:
*: w/ Daytime running light system
(d) Reconnect the main body ECU connector.
(e) Reconnect the headlight dimmer switch assembly connector.

NG → REPAIR OR REPLACE HARNESS OR CONNECTOR

OK

4 CHECK HARNESS AND CONNECTOR (HEADLIGHT DIMMER SWITCH - HEADLIGHT*)

HINT:
*: w/o Daytime running light system

LI

Wire Harness Side:

Headlight Connector

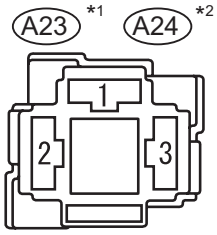

Front View

*1: LH

*2: RH

Headlight dimmer Switch Assembly Connector

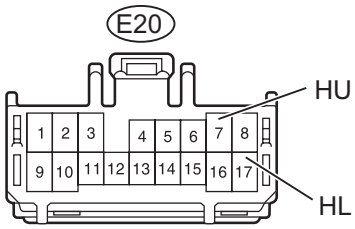

Front View

B138178E01

(a) Disconnect the E20 headlight dimmer switch assembly connector.
(b) Disconnect the A23 and A24 headlight connectors.
(c) Measure the resistance.

Standard resistance

Tester Connection	Specified Condition
E20-17 (HL) - A23-1	Below 1 Ω
E20-17 (HL) - A24-1	Below 1 Ω
E20-7 (HU) - A23-2	Below 1 Ω
E20-7 (HU) - A24-2	Below 1 Ω

(d) Reconnect the headlight dimmer switch assembly connector.
(e) Reconnect the headlight connectors.

NG → **REPAIR OR REPLACE HARNESS OR CONNECTOR**

OK

PROCEED TO NEXT CIRCUIT INSPECTION SHOWN IN PROBLEM SYMPTOMS TABLE

LI

Door Courtesy Switch Circuit

DESCRIPTION

The main body ECU detects the condition of each door courtesy switch.

WIRING DIAGRAM

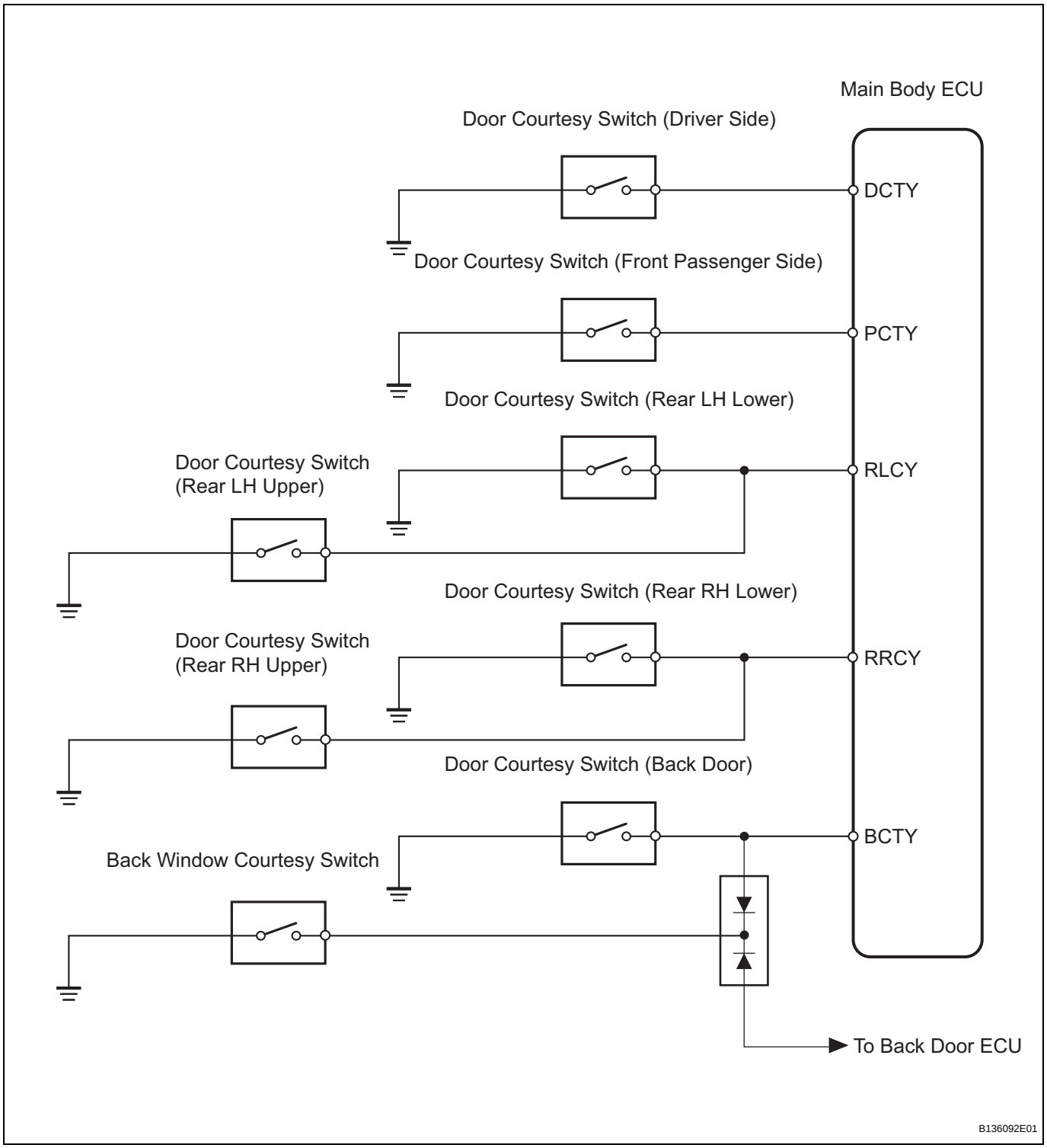

INSPECTION PROCEDURE

1	READ VALUE OF INTELLIGENT TESTER (DOOR COURTESY SWITCH)

(a) Connect the intelligent tester with CAN VIM to the DLC3.
(b) Turn the ignition switch ON.
(c) Turn the intelligent tester main switch on.
(d) Select the item below in the DATA LIST for proper functioning to check the courtesy switch.

BODY

Item	Measurement Item / Display (Range)	Normal Condition	Diagnostic Note
D DOR CTY SW	Driver door courtesy switch signal/ON or OFF	ON :Driver door open OFF: Driver door closed	-
P DOR CTY SW	Front passenger door courtesy switch signal/ON or OFF	ON: Front passenger door open OFF: Front passenger door closed	-
Rr DOR CTY SW	Rear door courtesy switch signal/ON or OFF	ON: Either right or left rear door open OFF: Both right and left rear doors closed	-
LUGG COURTSY SW	Back door and back window courtesy switch signal/ON or OFF	ON: Either back door or back window open OFF: Both back door and back window closed	-

OK:
Condition sign can be displayed.

Result

Result	Proceed to
OK	A
Driver side door courtesy switch does not operate	B
Front passenger side door courtesy switch does not operate	C
Both rear door courtesy switches do not operate	D
Back door courtesy switch or back window courtesy switch does not operate	E

B → Go to step 2
C → Go to step 4
D → Go to step 6
E → Go to step 8

A

PROCEED TO NEXT CIRCUIT INSPECTION SHOWN IN PROBLEM SYMPTOMS TABLE

2	INSPECT DOOR COURTESY SWITCH (DRIVER SIDE)

Inspection (See page LI-114)

OK:

Door courtesy switch is normal.

NG → **REPLACE DOOR COURTESY SWITCH (DRIVER SIDE)**

OK

3 CHECK HARNESS AND CONNECTOR (DOOR COURTESY SWITCH (DRIVER SIDE) - MAIN BODY ECU)

Wire Harness Side:

Main Body ECU Connector

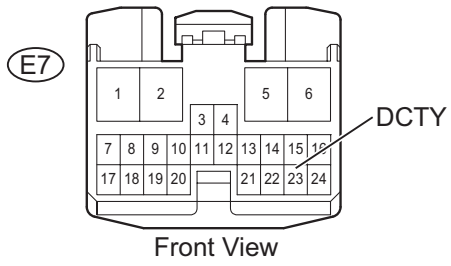

Front View

Door Courtesy Switch (Driver Side) Connector

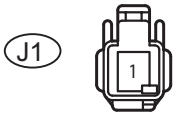

Front View

B138179E01

(a) Disconnect the E7 main body ECU connector.
(b) Disconnect the J1 door courtesy switch connector.
(c) Measure the resistance

Standard resistance

Tester Connection	Condition	Specified Condition
E7-23 (DCTY) - J1-1	Always	Below 1 Ω
E7-23 (DCTY) or J1-1 - Body ground	Always	10 kΩ or higher

(d) Reconnect the main body ECU connector.
(e) Reconnect the door courtesy switch connector.

NG → **REPAIR OR REPLACE HARNESS OR CONNECTOR**

OK

REPLACE MAIN BODY ECU

4 INSPECT DOOR COURTESY SWITCH (FRONT PASSENGER SIDE)

Inspection (See page LI-114)

OK:

Door courtesy switch is normal.

NG → **REPLACE DOOR COURTESY SWITCH (FRONT PASSENGER SIDE)**

OK

LI

5	CHECK HARNESS AND CONNECTOR (DOOR COURTESY SWITCH(FRONT PASSENGER SIDE) - MAIN BODY ECU)

Wire Harness Side:

Main Body ECU Connector

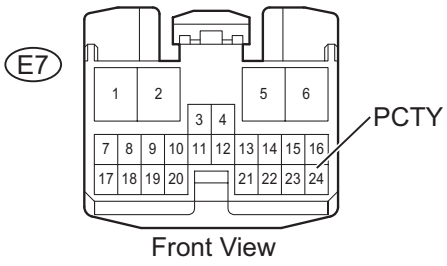

Front View

Door Courtesy Switch (Front Passenger Side) Connector

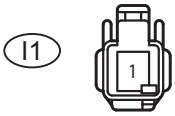

Front View

B138179E03

(a) Disconnect the E7 main body ECU connector.
(b) Disconnect the I1door courtesy switch connector.
(c) Measure the resistance.

Standard resistance

Tester Connection	Condition	Specified Condition
E7-24 (PCTY) - I1-1	Always	Below 1 Ω
E7-24 (PCTY) or I1-1 - Body ground	Always	10 kΩ or higher

(d) Reconnect the main body ECU connector.
(e) Reconnect the door courtesy switch connector.

NG → **REPAIR OR REPLACE HARNESS OR CONNECTOR**

OK

REPLACE MAIN BODY ECU

6	INSPECT REAR DOOR COURTESY SWITCH (REAR LH UPPER, REAR LH LOWER, REAR RH UPPER, REAR RH LOWER)

(a) Inspect the rear door lock upper assembly (See page LI-117)
(b) Inspect the rear door lock lower assembly (See pageLI-120)

OK:

Door courtesy switch is normal.

NG → **REPLACE REAR DOOR COURTESY SWITCH (REAR DOOR LOCK ASSEMBLY)**

OK

7	**CHECK HARNESS AND CONNECTOR (REAR DOOR COURTESY SWITCH - MAIN BODY ECU)**

Wire Harness Side:

Main Body ECU Connector

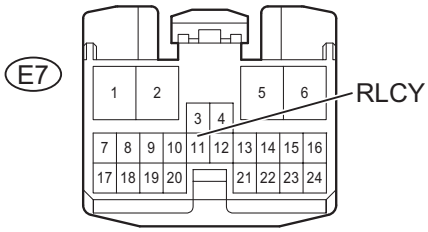

Front View

Door Courtesy Switch (LH Upper) Connector

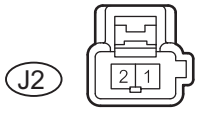

Front View

Door Courtesy Switch (LH Lower) Connector

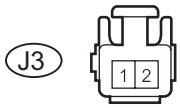

Front View

B138180E01

(a) Check the wire harness between the main body ECU and rear door courtesy switch LH (upper and lower).
  (1) Disconnect the E7 main body ECU connector.
  (2) Disconnect the J2 and J3 door courtesy switch connectors.
  (3) Measure the resistance.
  Standard resistance

Tester Connection	Condition	Specified Condition
E7-11 (RLCY) - J2-2	Always	Below 1 Ω
E7-11 (RLCY) - J3-1	Always	Below 1 Ω
E7-11 (RLCY) or J2-2 or J3-1- Body ground	Always	10 kΩ or higher

  (4) Reconnect the main body ECU connector.
  (5) Reconnect the door courtesy switch connectors.

Wire Harness Side:

Main Body ECU Connector

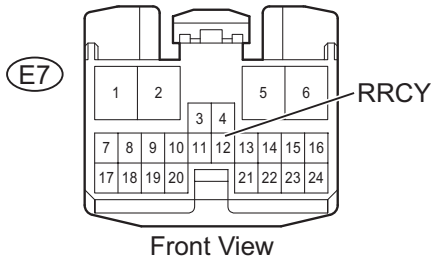

Front View

Door Courtesy Switch (RH Upper) Connector

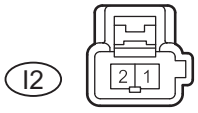

Front View

Door Courtesy Switch (RH Lower) Connector

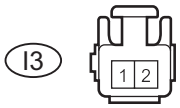

Front View

B138180E02

(b) Check the wire harness between the main body ECU and rear door courtesy switch RH (upper and lower).
(1) Disconnect the E7 main body ECU connector.
(2) Disconnect the I2 and I3 door courtesy switch connectors.
(3) Measure the resistance.
Standard resistance

Tester Connection	Condition	Specified Condition
E7-12 (RRCY) - I2-2	Always	Below 1 Ω
E7-12 (RRCY) - I3-1	Always	Below 1 Ω
E7-12 (RRCY) or I2-2 or I3-1- Body ground	Always	10 kΩ or higher

(4) Reconnect the main body ECU connector.
(5) Reconnect the door courtesy switch connectors.

NG → **REPAIR OR REPLACE HARNESS OR CONNECTOR**

OK

REPLACE MAIN BODY ECU

8	INSPECT BACK DOOR COURTESY SWITCH

Inspection (See page LI-122)
OK:
Door courtesy switch is normal.

NG → **REPLACE BACK DOOR COURTESY SWITCH**

OK

9	INSPECT BACK WINDOW LOCK ASSEMBLY (BACK WINDOW COURTESY SWITCH)

Inspection (See page WS-94)
OK:
Door courtesy switch is normal.

NG → **REPLACE BACK WINDOW LOCK ASSEMBLY**

OK

10	CHECK HARNESS AND CONNECTOR (BACK DOOR COURTESY, BACK WINDOW COURTESY - MAIN BODY ECU)

Wire Harness Side:

Back Window Courtesy Switch Connector

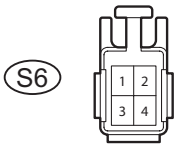

Front View

Back Door Courtesy Switch Connector

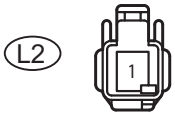

Front View

B138181E01

(a) Disconnect the L2 back door courtesy switch connector.
(b) Disconnect the S6 back window lock assembly connector.
(c) Measure the voltage.
Standard voltage

Tester Connection	Condition	Specified Condition
L2-1 - Body ground	Always	11 to 14 V
S6-4 - Body ground	Always	11 to 14 V

(d) Reconnect the back door courtesy switch connector.
(e) Reconnect the back window lock assembly connector.

NG → **REPAIR OR REPLACE HARNESS OR CONNECTOR**

OK

REPLACE MAIN BODY ECU

LI

Illumination Circuit

DESCRIPTION

Upon receiving signals from the switches, the main body ECU illuminates the lights.

WIRING DIAGRAM

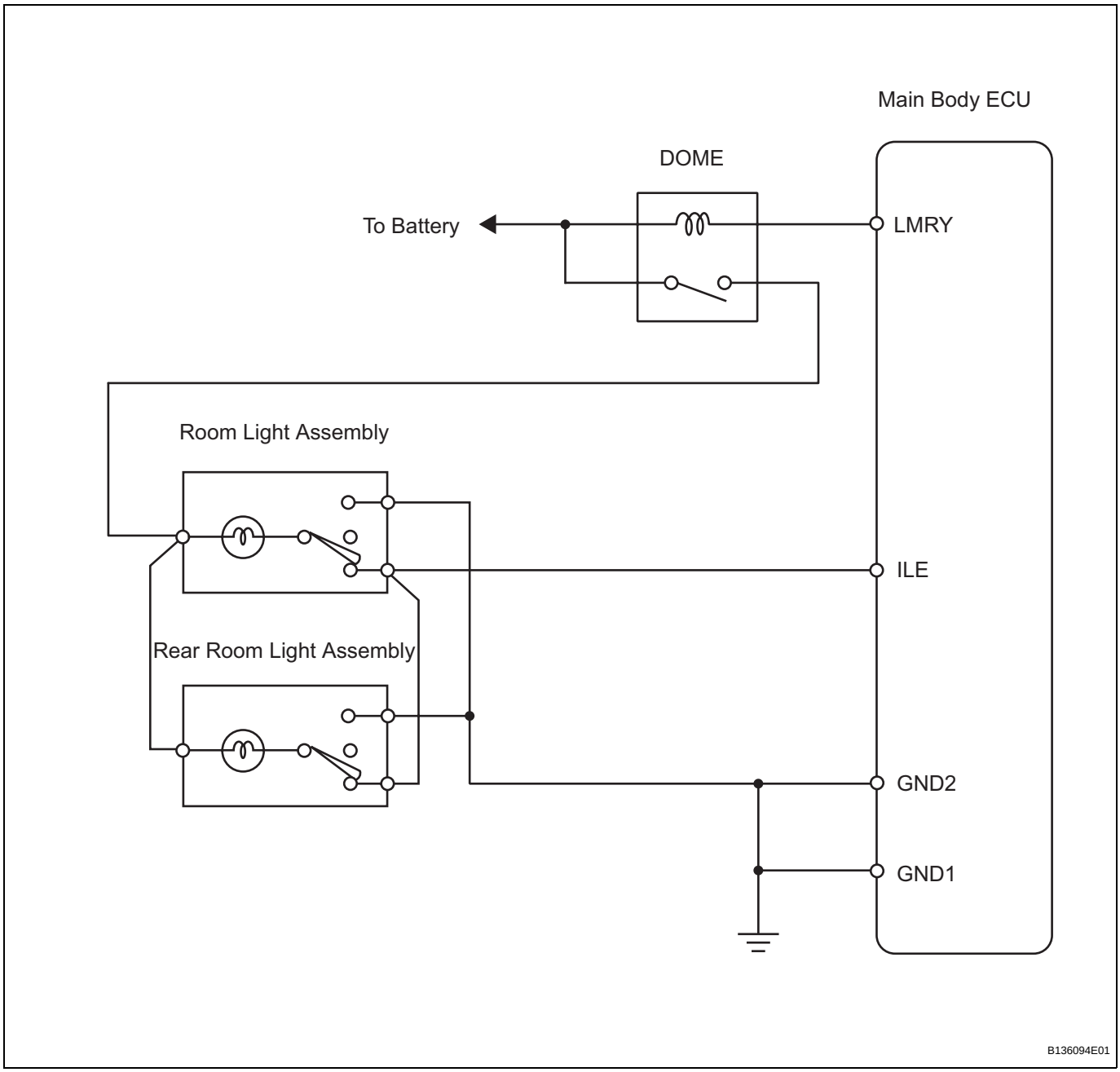

INSPECTION PROCEDURE

1	**PERFORM ACTIVE TEST BY INTELLIGENT TESTER**

(a) Connect the intelligent tester with CAN VIM to DLC3.
(b) Turn the ignition switch ON.
(c) Turn the intelligent tester on.

(d) Select the item(s) in the ACTIVE TEST, and check the operation.

BODY

Item	Test Details	Diagnostic Note
ILLUMI OUTPUT	Illuminated Entry System ON/OFF	-

OK:
The room light and rear room light come on. (Light switch is in DOOR position.)

OK → **PROCEED TO NEXT CIRCUIT INSPECTION SHOWN IN PROBLEM SYMPTOMS TABLE**

NG

2 INSPECT ROOM LIGHT ASSEMBLY

(a) Inspect the room light assembly. (see page LI-96).

OK:
Room light assembly is normal.

NG → **REPLACE ROOM LIGHT ASSEMBLY**

OK

3 INSPECT REAR ROOM LIGHT ASSEMBLY

(a) Inspect the rear room light assembly. (see pageLI-100).

OK:
Rear room light assembly is normal.

NG → **REPLACE REAR ROOM LIGHT ASSEMBLY**

OK

4 CHECK HARNESS AND CONNECTOR (MAIN BODY ECU - ROOM LIGHT, BODY GROUND)

Wire Harness Side:

Main Body ECU Connector

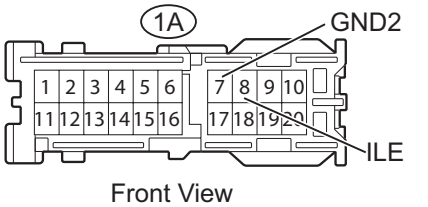

(a) Disconnect the 1A main body ECU connector.
(b) Measure the resistance.

Standard resistance

Tester Connection	Condition	Specified Condition
1A-8 (ILE) - 1A-7(GND2)	Room light switch is in DOOR position Rear room light switch is in OFF position	Below 1 Ω
1A-8 (ILE) - 1A-7(GND2)	Room light switch is in OFF position Rear room light switch is in DOOR position	Below 1 Ω
1A-8 (ILE) or 1A-7 (GND2)- Body ground	Always	10 kΩ or higher

(c) Reconnect the main body ECU connector.

NG → **REPAIR OR REPLACE HARNESS OR CONNECTOR**

LI

OK

REPLACE MAIN BODY ECU

Taillight Relay Circuit

DESCRIPTION

The headlight dimmer switch sends a signal to the main body ECU.

WIRING DIAGRAM

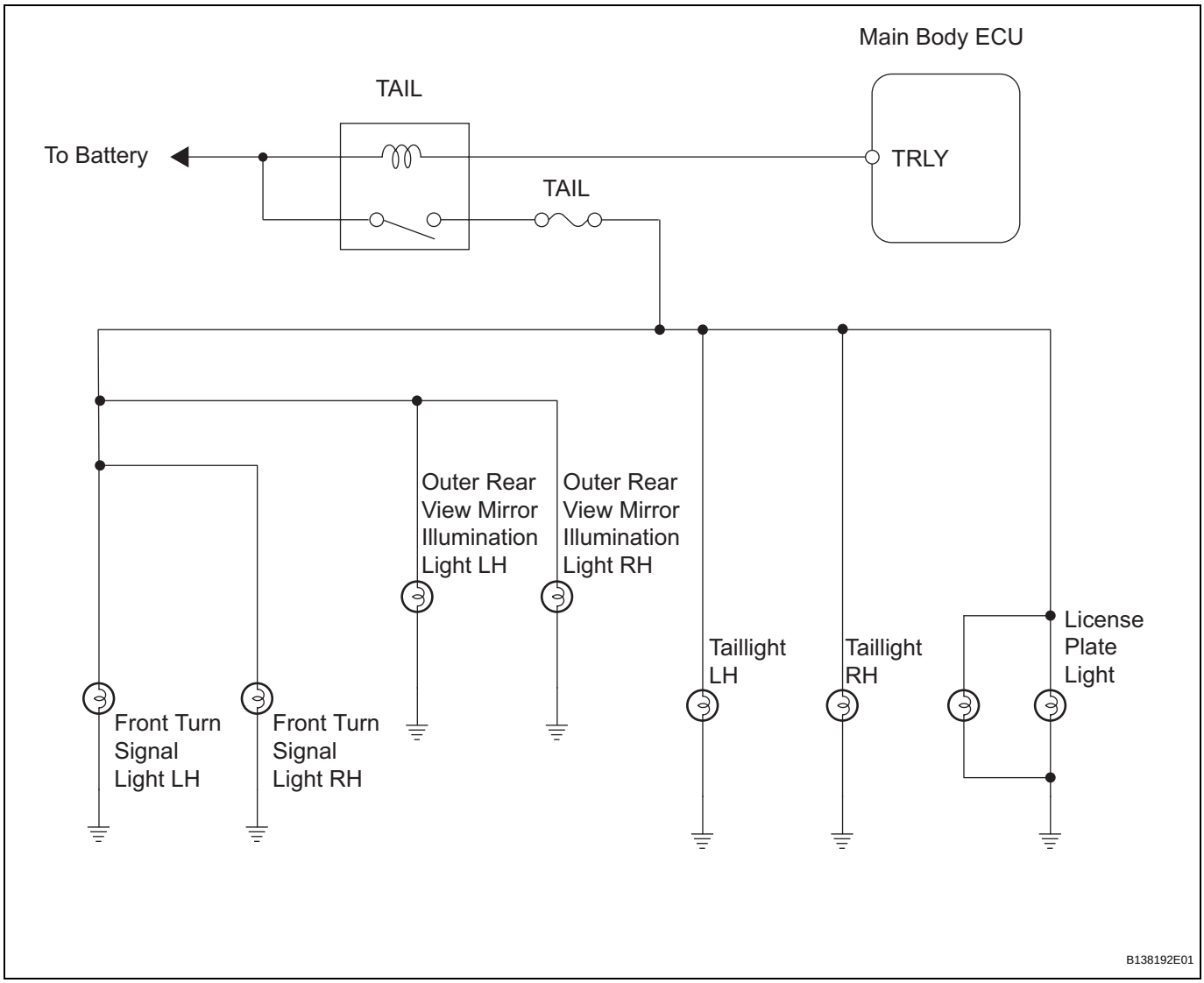

INSPECTION PROCEDURE

1	PERFORM ACTIVE TEST BY INTELLIGENT TESTER (ILLUMI OUTPUT)

(a) Connect the intelligent tester with CAN VIM to the DLC3.
(b) Turn the ignition switch ON.
(c) Turn the intelligent tester main switch on.
(d) Select the item below in the ACTIVE TEST and then check the relay operation.

BODY

Item	Test Details/ Display (Range)	Diagnostic Note
ILLUMI OUTPUT	Illuminated Entry System ON/OFF	-

Result

Result	Proceed to
OK	A
No illumination lights illuminate	B
Front turn signal light does not illuminate	C
Taillight or license plate light does not illuminate	D
Outer rear view mirror illumination light does not illuminate	E

B → **Go to step 2**

C → **Go to step 5**

D → **Go to step 7**

E → **Go to step 10**

A

PROCEED TO NEXT CIRCUIT INSPECTION SHOWN IN PROBLEM SYMPTOMS TABLE

LI

2 INSPECT FUSE (TAIL FUSE)

(a) Remove the TAIL fuse from the main body ECU.
(b) Measure the resistance.

Standard resistance:

Below 1 Ω

(c) Reinstall the TAIL fuse.

NG → **REPLACE FUSE**

OK

3 INSPECT TAIL RELAY

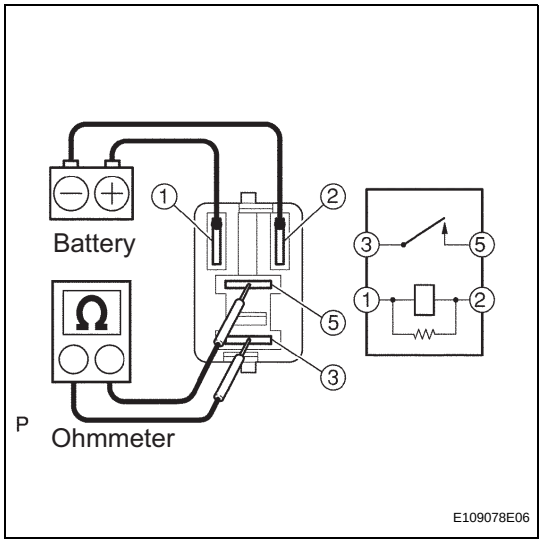

(a) Remove the TAIL relay from the main body ECU.
(b) Measure the resistance.

Standard resistance

Tester Connection	Specified Condition
3 - 5	10 kΩ or higher
3 - 5	Below 1 Ω (When battery voltage is applied between terminals 1 and 2)

(c) Reinstall the TAIL relay.

NG → **REPLACE TAIL RELAY**

OK

4	CHECK HARNESS AND CONNECTOR (BATTERY - TAIL RELAY)

Component Side:

Main Body ECU

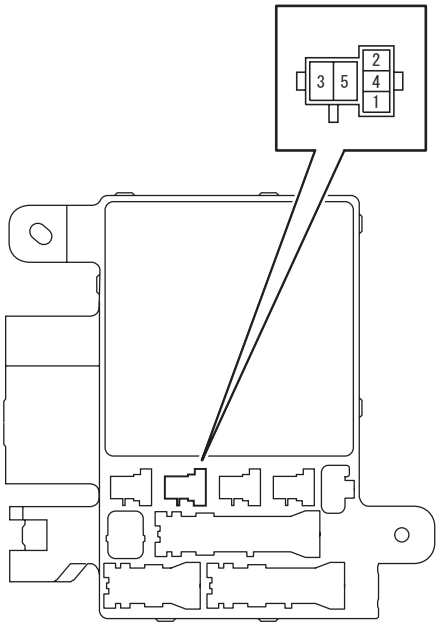

B138193E01

(a) Remove the TAIL relay from the main body ECU.
(b) Measure the resistance.

Standard resistance

Tester Connection	Condition	Specified Condition
1 - Body ground	Always	11 to 14 V
5 - Body ground	Always	11 to 14 V

(c) Reinstall the TAIL relay.

NG → **REPAIR OR REPLACE HARNESS OR CONNECTOR**

OK

REPLACE MAIN BODY ECU

5	INSPECT BULB (FRONT TURN SIGNAL LIGHT)

Component Side:

Front Turn Signal Light*



*: LH or RH

B136088E01

(a) Remove the front turn signal lights.
(b) Apply battery voltage to the terminals and check that the front turn signal light illuminates.

Standard

Measurement Condition	Standard
Positive battery - Terminal 1 Negative battery - Terminal 2	Front turn signal light illuminates

(c) Reinstall the front turn signal lights.

NG → **REPLACE BULB**

OK

6	CHECK HARNESS AND CONNECTOR (MAIN BODY ECU - FRONT TURN SIGNAL LIGHT)

Wire Harness Side:

Front Turn Signal Light Connector

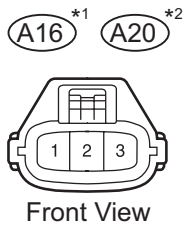

Front View

*1: LH

*2: RH

Main Body ECU Connector

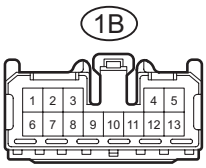

Front View

B138191E01

(a) Disconnect the A16 and A20 front turn signal light connectors.
(b) Disconnect the 1B main body ECU connector.
(c) Measure the resistance.

Standard resistance

Tester Connection	Specified Condition
A16-1 - 1B-9	Below 1 Ω
A20-1 - 1B-11	Below 1 Ω
A16-1 or 1B-9 - Body ground	10 kΩ or higher
A20-1 or 1B-11 - Body ground	10 kΩ or higher

(d) Reconnect the front turn signal light connectors.
(e) Reconnect the main body ECU connector.

NG → **REPAIR OR REPLACE HARNESS OR CONNECTOR**

OK

REPAIR OR REPLACE HARNESS OR CONNECTOR (FRONT TURN SIGNAL LIGHT - BODY GROUND)

7	INSPECT BULB (TAILLIGHT)

Component Side:

Taillight*

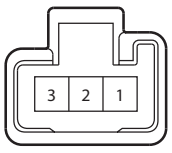

*: LH or RH

B141038E01

(a) Remove the taillights.
(b) Apply battery voltage to the terminals and check that the taillight illuminates.

Standard

Measurement Condition	Standard
Positive battery - Terminal 1 Negative battery - Terminal 2	Taillight illuminates

(c) Reinstall the taillights.

NG → **REPLACE BULB**

OK

8 INSPECT BULB (LICENSE PLATE LIGHT)

Component Side:

License Plate Light



B138194E01

(a) Remove the license plate light.
(b) Apply battery voltage to the terminals and check that the license plate light illuminates.

Standard

Measurement Condition	Standard
Positive battery - Terminal 1 Negative battery - Terminal 2	Licence plate light illuminates

(c) Reinstall the license plate light.

NG → **REPLACE BULB**

OK

9 CHECK HARNESS AND CONNECTOR (MAIN BODY ECU - TAILLIGHT, LICENSE PLATE LIGHT)

Wire Harness Side:

Taillight Connector

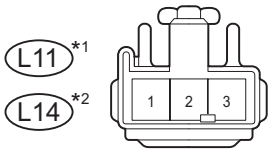

Front View

*1: LH
*2: RH

License Plate Light Connector

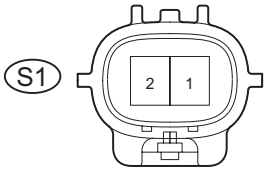

Front View

Main Body ECU Connector

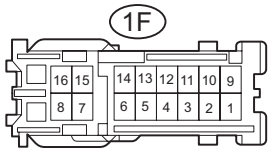

Y

B138195E01

(a) Disconnect the L11 and L14 taillight connectors.
(b) Disconnect the S1 license plate light connector.
(c) Disconnect the 1F main body ECU connector.
(d) Measure the resistance.

Standard resistance

Tester Connection	Specified Condition
1F-13 - L11-2	Below 1 Ω
1F-13 - L14-2	Below 1 Ω
1F-13 - S1-2	Below 1 Ω
1F-13 or L11-2 or Body ground	10 kΩ or higher
1F-13 or L14-2 or Body ground	10 kΩ or higher
1F-13 or S1-2 or Body ground	10 kΩ or higher

(e) Reconnect the taillight connectors.
(f) Reconnect the license plate light connector.
(g) Reconnect the main body ECU connector.

NG → **REPAIR OR REPLACE HARNESS OR CONNECTOR**

OK

REPAIR OR REPLACE HARNESS OR CONNECTOR (TAILLIGHT, LICENSE PLATE LIGHT - BODY GROUND)

LI

10 INSPECT BULB (OUTER REAR VIEW MIRROR ILLUMINATION LIGHT)

Component Side:

Outer Rear View Mirror Assembly*



*: LH and RH

Y B138196E01

(a) Remove the outer rear view mirror assembly.
(b) Apply battery voltage to the terminals and check that the outer rear view mirror illumination light illuminates.

Standard

Measurement Condition	Standard
Positive battery - Terminal 2 Negative battery - Terminal 1	Outer rear view mirror illumination light illuminates

(c) Reinstall the outer rear view mirror assembly.

NG → **REPLACE BULB**

OK

11 CHECK HARNESS AND CONNECTOR (MAIN BODY ECU - OUTER REAR VIEW MIRROR ILLUMINATION LIGHT)

Wire Harness Side:

Outer Rear View Mirror Assembly Connector

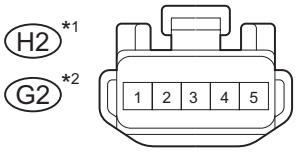

Front View

*1: LH
*2: RH

Main Body ECU Connector

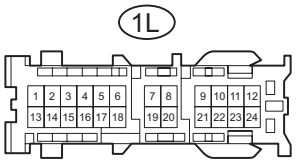

Front View

Y B138197E01

(a) Disconnect the H2 and G2 outer rear view mirror assembly connectors.
(b) Disconnect the 1L main body ECU connector.
(c) Measure the resistance.

Standard resistance

Tester Connection	Specified Condition
1L-5 - H2-2	Below 1 Ω
1L-5 - G2-2	Below 1 Ω

(d) Reconnect the outer rear view mirror assembly connector.
(e) Reconnect the main body ECU connector.

NG → **REPAIR OR REPLACE HARNESS OR CONNECTOR**

OK

REPAIR OR REPLACE HARNESS OR CONNECTOR (OUTER REAR VIEW MIRROR ILLUMINATION LIGHT - BODY GROUND)

HEADLIGHT ASSEMBLY

COMPONENTS

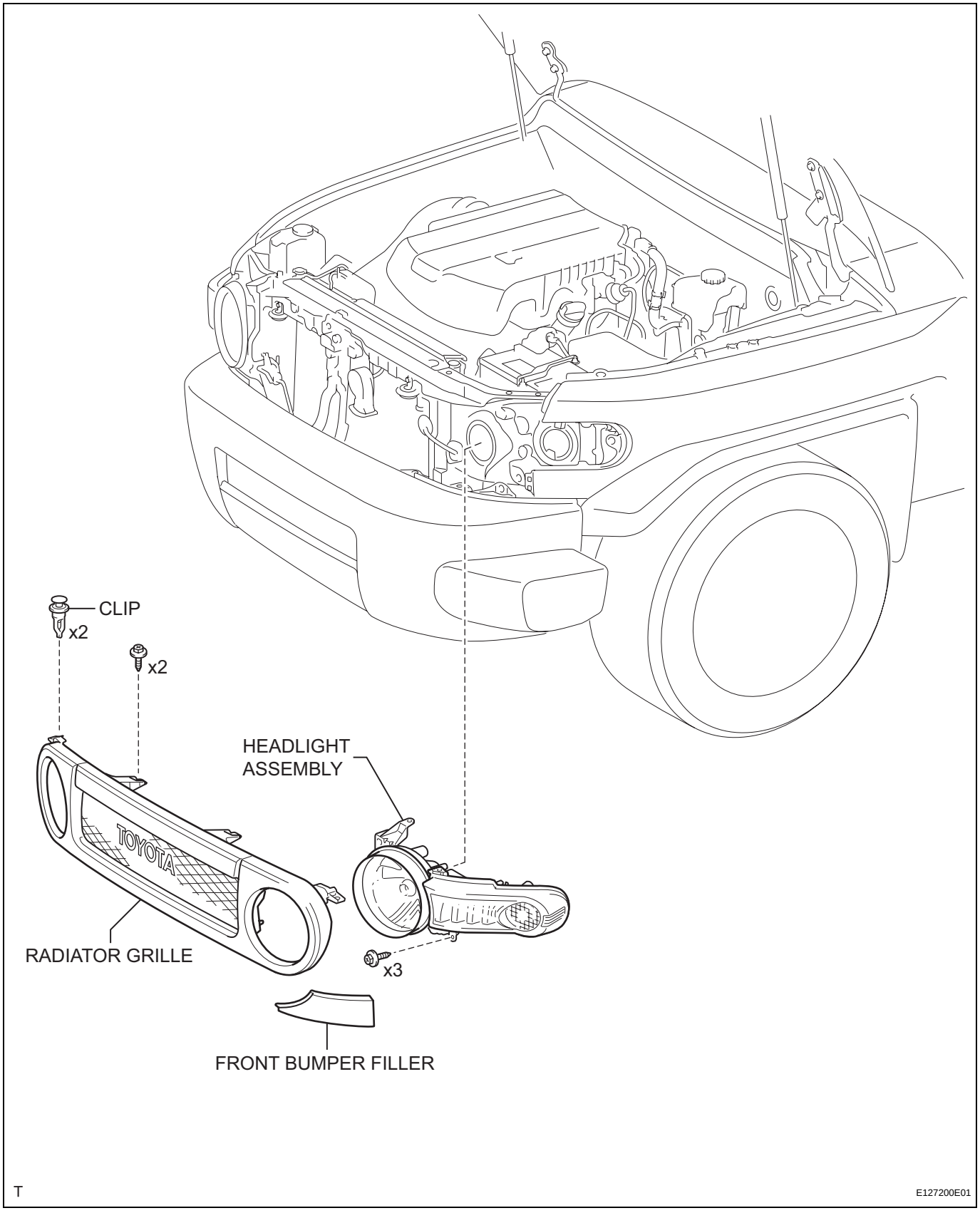

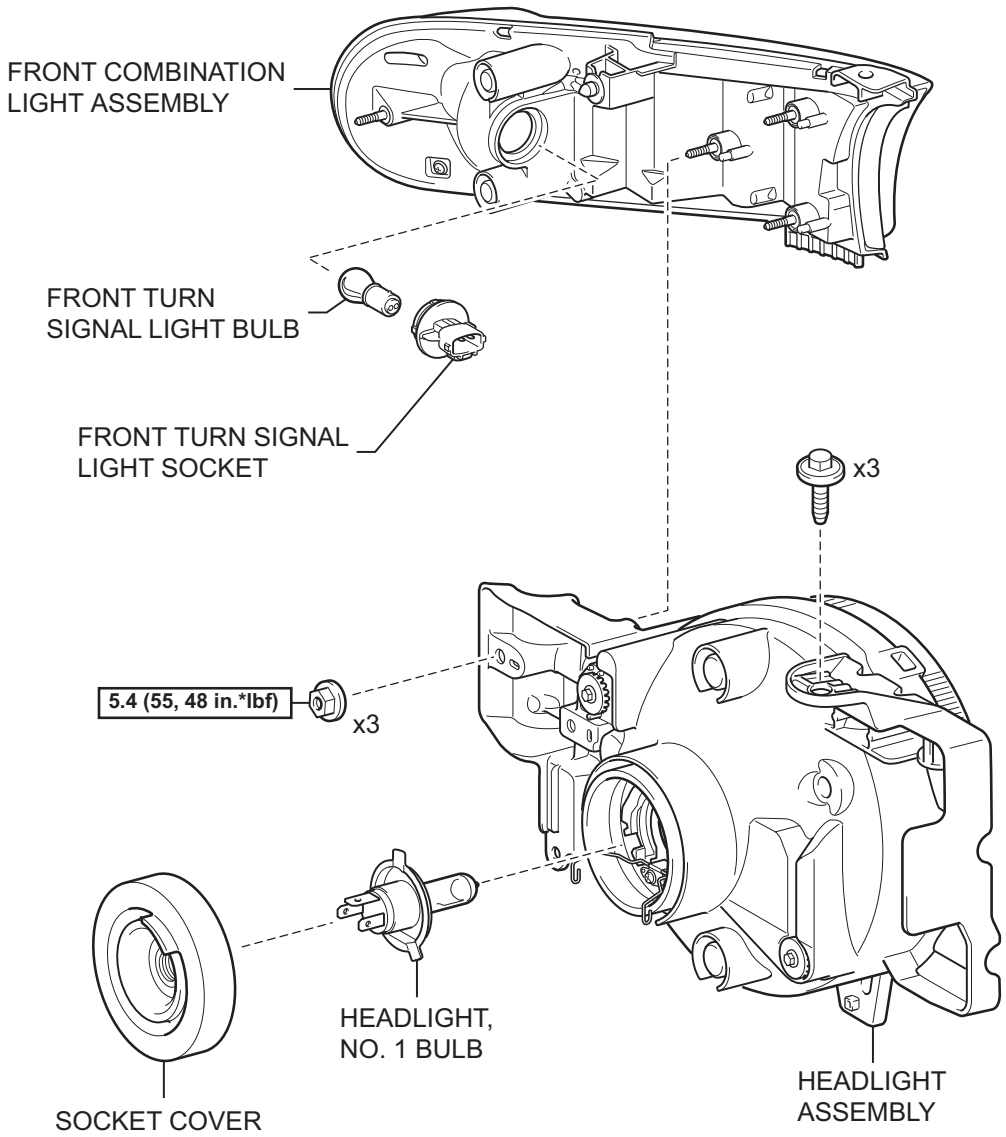

N*m (kgf*cm, ft*lbf) : Specified torque

T

E127247E01

REMOVAL

HINT:

- Use the same procedure for both the RH and LH sides.
- The procedure described below is for the LH side.

1. **DISCONNECT CABLE FROM NEGATIVE BATTERY TERMINAL**
2. **REMOVE RADIATOR GRILLE (See page ET-4)**
3. **REMOVE FRONT BUMPER FILLER**
   (a) Disengage the 2 claws and clip and remove the front bumper filler.

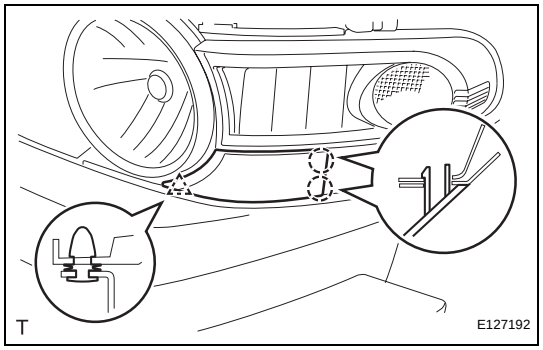

4. **REMOVE HEADLIGHT ASSEMBLY**
   (a) Disconnect the 2 connectors.
   (b) Remove the 3 screws.
   (c) Disengage the clip and pin and slide the headlight toward the front of the vehicle.

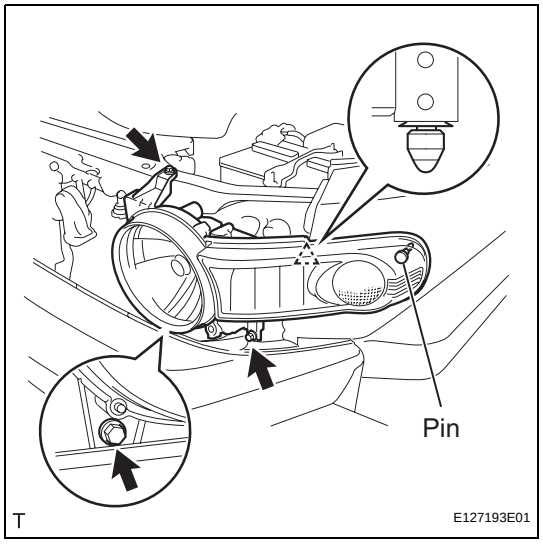

DISASSEMBLY

1. **REMOVE HEADLIGHT ASSEMBLY**
   (a) Remove the 3 nuts and the headlight.

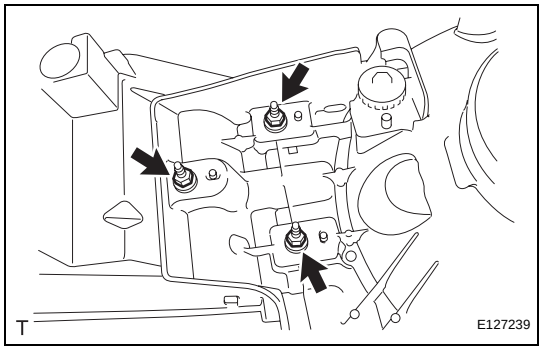

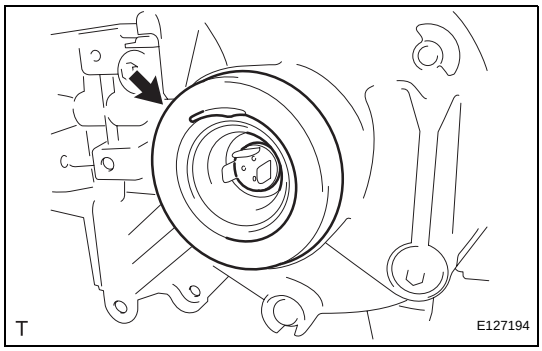

2. REMOVE HEADLIGHT, NO. 1 BULB

(a) Remove the socket cover.

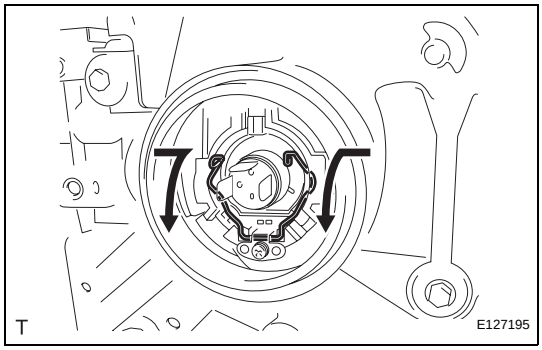

(b) Push the set spring, and pull it in the direction indicated by the arrows in the illustration, to disengage it.

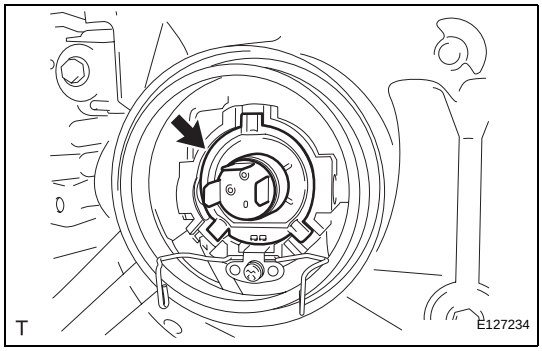

(c) Remove the headlight, No. 1 bulb.
NOTICE:
Do not touch the bulb glass with your fingers.

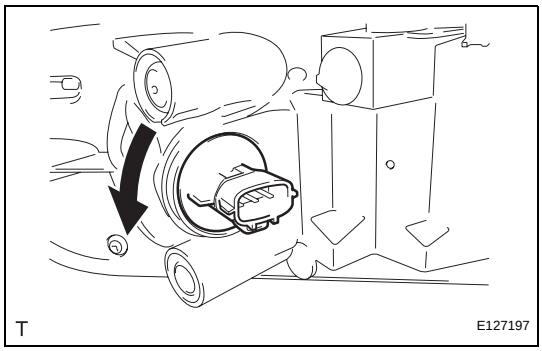

3. REMOVE FRONT TURN SIGNAL LIGHT BULB

(a) Turn the front turn signal light socket and bulb, in the direction indicated by the arrow in the illustration, to remove them.

(b) Remove the front turn signal light bulb from the light socket.

ADJUSTMENT

1. PREPARE VEHICLE FOR HEADLIGHT AIMING ADJUSTMENT

(a) Prepare the vehicle:
- Ensure that there is no damage or deformation of the body around the headlights.
- Fill the fuel tank.
- Fill the oil to the specified level.
- Fill the coolant to the specified level.
- Inflate the tires to the appropriate pressure.
- Place the spare tire, tools and jack in their original positions.
- Unload the trunk.
- Sit a person of average weight (68 kg, 150 lb) in the driver seat.

2. PREPARE FOR HEADLIGHT AIMING (for Using a Tester)

(a) Prepare the vehicle for headlight aim check.

(b) Adjust the headlight in accordance with headlight tester instructions.

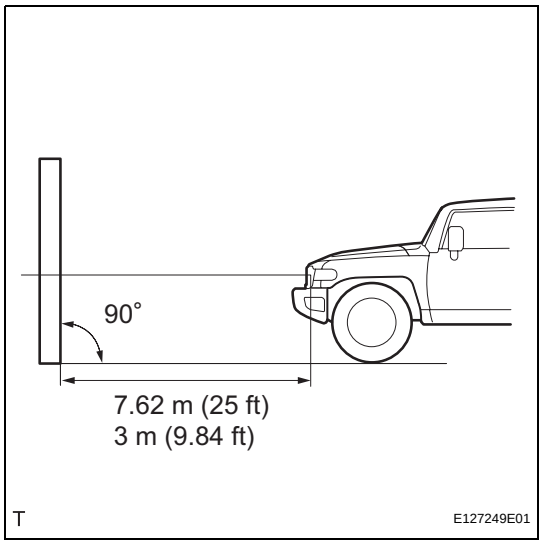

3. PREPARE FOR HEADLIGHT AIMING (for Using a Screen)

(a) Prepare the vehicle in accordance with the following conditions:
- Place the vehicle in a location that is dark enough to clearly observe the cutoff line. The cutoff line is a distinct line, below which light from the headlights can be observed and above which it cannot.
- Place the vehicle at a 90° angle to the wall.
- Keep a 7.62 m (25 ft) distance between the center of the headlight bulb and the wall.
- Place the vehicle on a level surface.
- Bounce the vehicle up and down to settle the suspension.

NOTICE:

A distance of 7.62 m (25 ft) between the vehicle (the center of the headlight bulb) and the wall is necessary for proper aim adjustment. If unable to secure a distance of 7.62 m (25 ft), set a distance of exactly 3 m (9.84 ft) to check and adjust the headlight aim. (Since the target zone changes depending on the distance, follow the instructions shown in the illustration.)

(b) Prepare a piece of thick white paper (approximately 2 m (6.6 ft) high x 4 m (13.1 ft) wide) to use as a screen.

(c) Draw a vertical line down the center of the screen (V line).

LI

(d) Set the screen, as shown in the illustration.

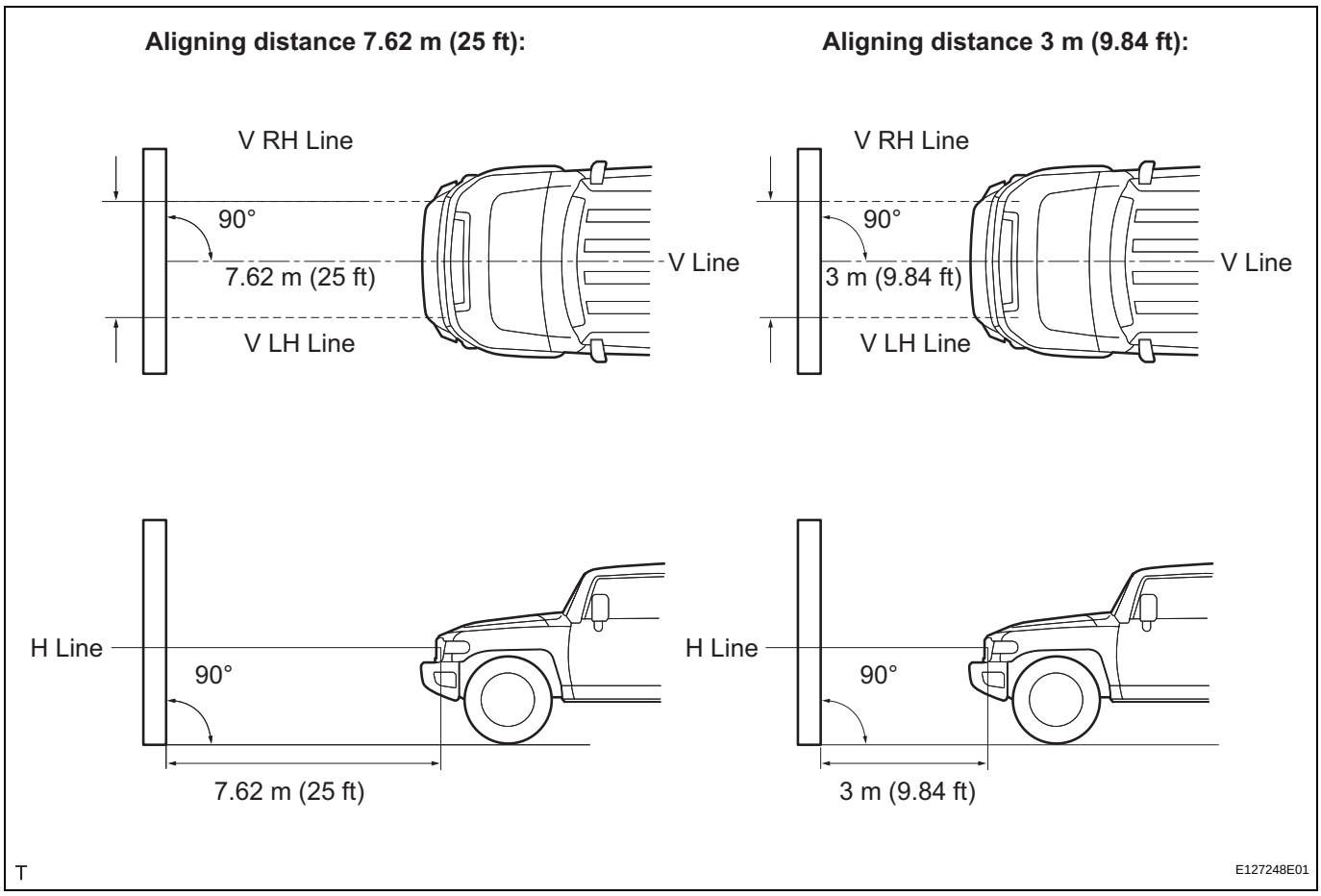

HINT:
- Stand the screen perpendicular to the ground.
- Align the V line on the screen with the center of the vehicle.

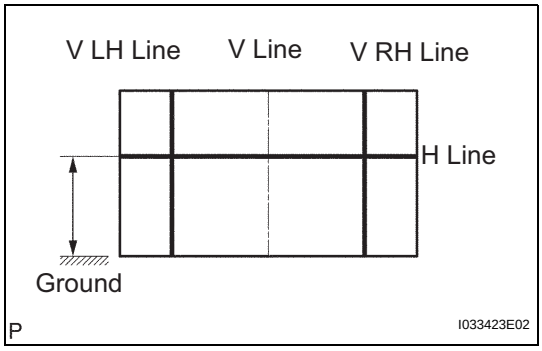

(e) Draw base lines (H line, V LH and V RH lines) on the screen, as shown in the illustration.
HINT:
- The base lines differ for "low-beam inspection" and "high-beam inspection".
- Mark the headlight bulb center marks on the screen. If the center mark cannot be observed on the headlight, use the center of the headlight bulb.

(1) H Line (Headlight height):
Draw a horizontal line across the screen so that it passes through the center marks. The H line should be at the same height as the headlight bulb center marks of the low-beam headlights.

(2) V LH Line and V RH Line (Center mark positions of left-hand (LH) and right-hand (RH) headlights):
Draw two vertical lines so that they intersect the H line at each center mark (aligned with the center of the low-beam headlight bulbs).

4. INSPECT HEADLIGHT AIMING

(a) Cover the headlight on the opposite side or disconnect its connector, to prevent light from the headlight not being inspected from affecting the headlight aiming inspection.

NOTICE:

Do not keep the headlight covered for more than 3 minutes. The headlight lens is made of synthetic resin, and may easily melt or be damaged due to heat.

(b) Start the engine.

NOTICE:

Engine rpm must be 1,500 or more.

(c) Turn on the headlight and make sure that the cutoff line falls within the specified area, as shown in the illustration.

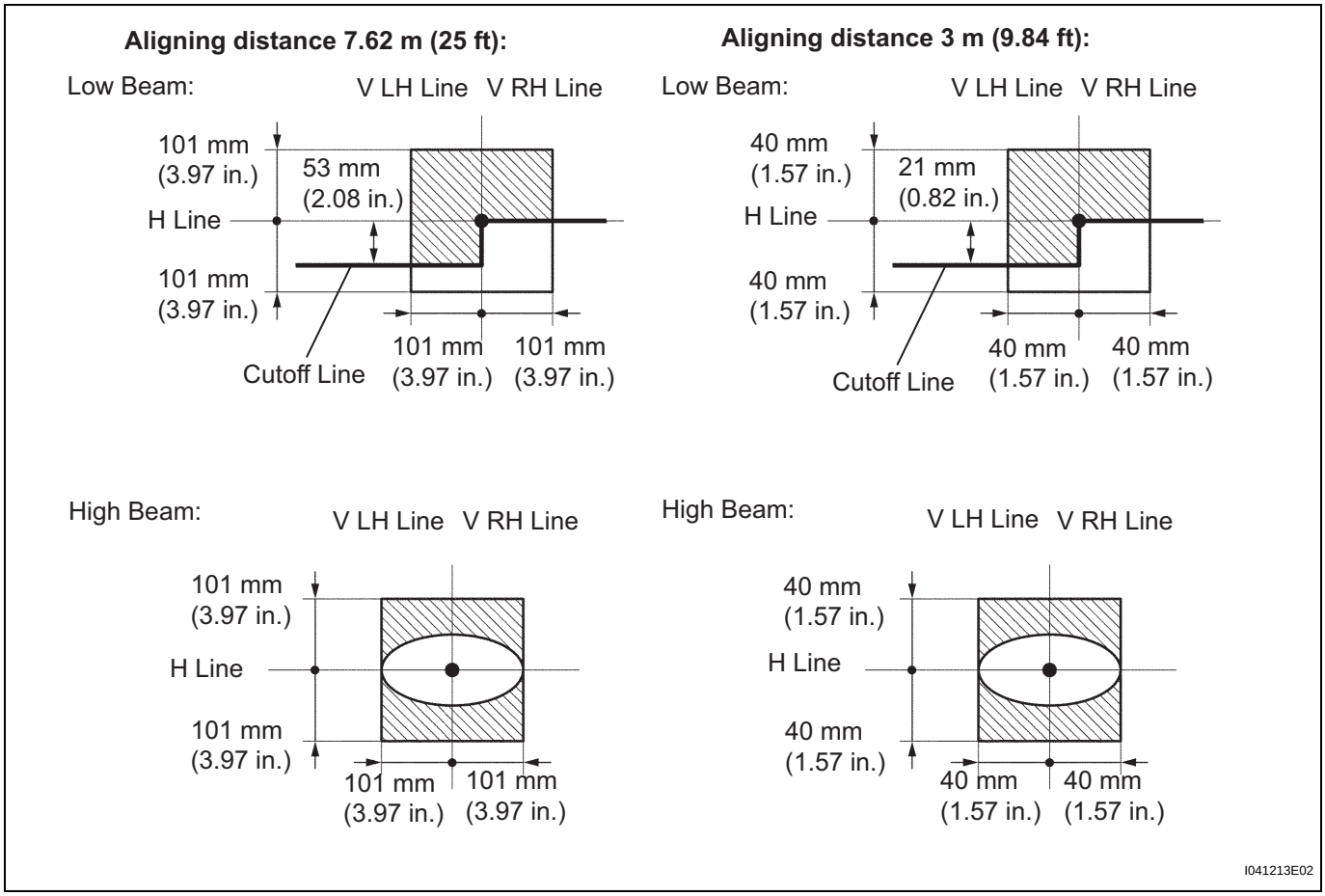

HINT:

- Since the low-beam light and the high-beam light are a unit, if the aim on one is correct, the other should also be correct. However, check both beams just to make sure.
- Alignment distance is 7.62 m (25 ft):
  The cutoff line is 101 mm (3.97 in.) above and below the H line as well as to the left and right of the V line with low-beam (SAE J599).

- Alignment distance is 3 m (9.84 ft):
  The cutoff line is 40 mm (1.57 in.) above and below the H line as well as to the left and right of the V line with low-beam (SAE J599).
- Alignment distance is 7.62 m (25 ft):
  The cutoff line is 101 mm (3.97 in.) above and below the H line as well as to the left and right of the V line with high-beam (SAE J599).
- Alignment distance is 3 m (9.84 ft):
  The cutoff line is 40 mm (1.57 in.) above and below the H line as well as to the left and right of the V line with high-beam (SAE J599).
- Alignment distance is 7.62 m (25 ft):
  The cutoff line is 53 mm (2.08 in.) below the H line with low-beam.
- Alignment distance is 3 m (9.84 ft):
  The cutoff line is 21 mm (0.82 in.) below the H line with low-beam.

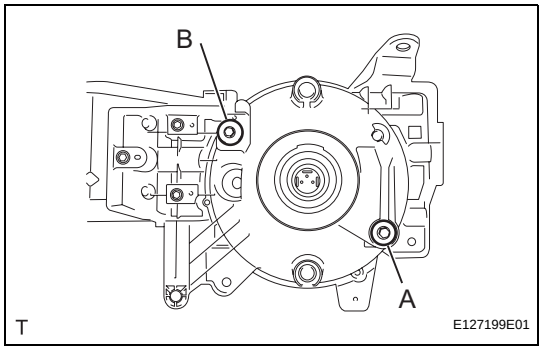

5. ADJUST HEADLIGHT AIMING

(a) Adjust the aiming vertically.
Adjust the headlight aim to within the specified range by turning aiming screw A with a screwdriver.
NOTICE:
The final turn of the aiming screw should be made in the clockwise direction. If the screw is tightened excessively, loosen it and then retighten it, so that the final turn of the screw is in the clockwise direction.

(b) Perform low-beam aim adjustment.
HINT:
The headlight aim moves down when the aiming screw is turned clockwise, and moves up when the aiming screw is turned counterclockwise.

(c) Adjust the aim horizontally.
Adjust the headlight aim to within the specified range by turning aiming screw B with a screwdriver.
NOTICE:
The final turn of the aiming screw should be made in the clockwise direction. If the screw is tightened excessively, loosen it and then retighten it, so that the final turn of the screw is in the clockwise direction.

REASSEMBLY

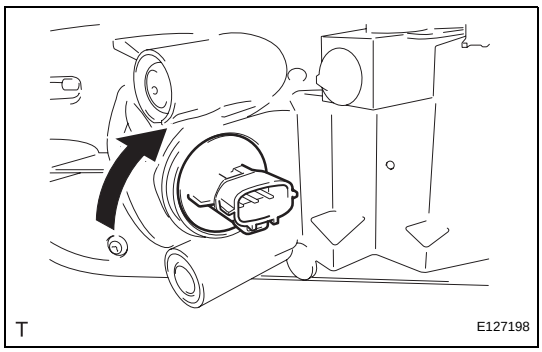

1. INSTALL FRONT TURN SIGNAL LIGHT BULB

(a) Install the front turn signal light bulb into the light socket.

(b) Turn the front turn signal light socket and bulb, in the direction indicated by the arrow in the illustration, to install them.

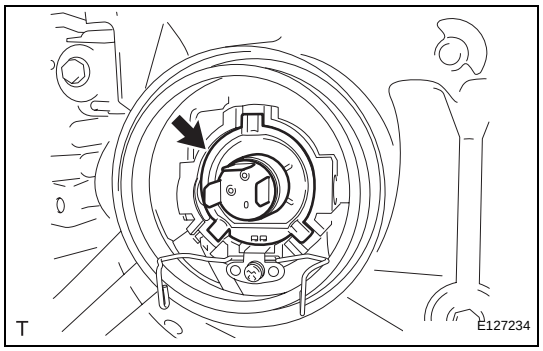

2. INSTALL HEADLIGHT, NO. 1 BULB

(a) Install the headlight, No. 1 bulb.

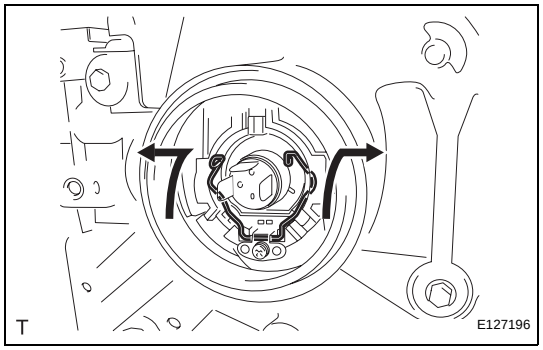

(b) Lock the set spring by moving it in the directions indicated by the arrows in the illustration.

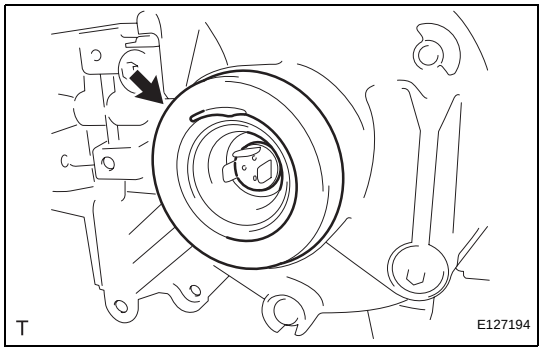

(c) Install the socket cover.

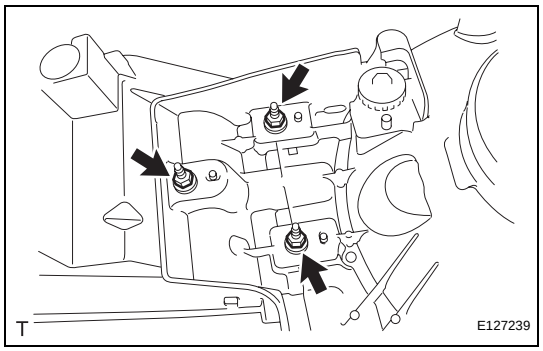

3. INSTALL HEADLIGHT ASSEMBLY

(a) Install the headlight with the 3 nuts.
Torque: 5.4 N*m (55 kgf*cm, 48 in.*lbf)

LI

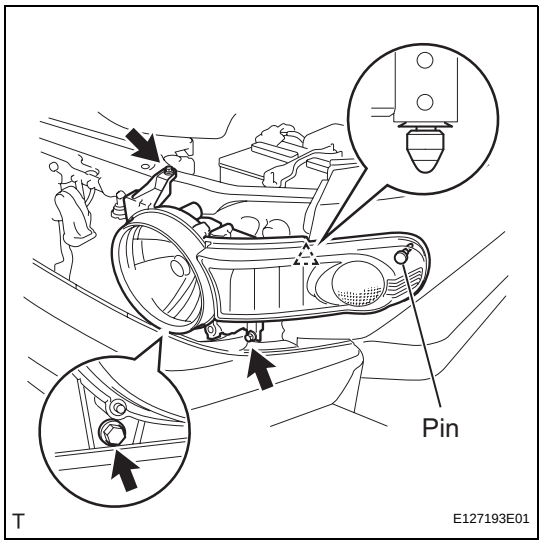

INSTALLATION

1. INSTALL HEADLIGHT ASSEMBLY

(a) Install the headlight onto the vehicle.
(b) Tighten the 3 screws.
(c) Connect the 2 connectors.

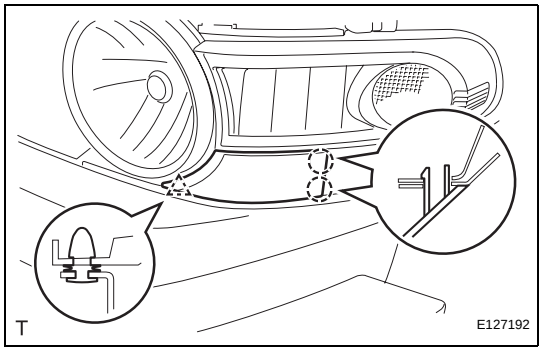

2. INSTALL FRONT BUMPER FILLER

(a) Engage the 2 claws and clip and install the front bumper filler.

3. INSTALL RADIATOR GRILLE (See page ET-11)

4. CONNECT CABLE TO NEGATIVE BATTERY TERMINAL
Torque: 3.9 N*m (40 kgf*cm, 35 in.*lbf)

REAR COMBINATION LIGHT ASSEMBLY

COMPONENTS

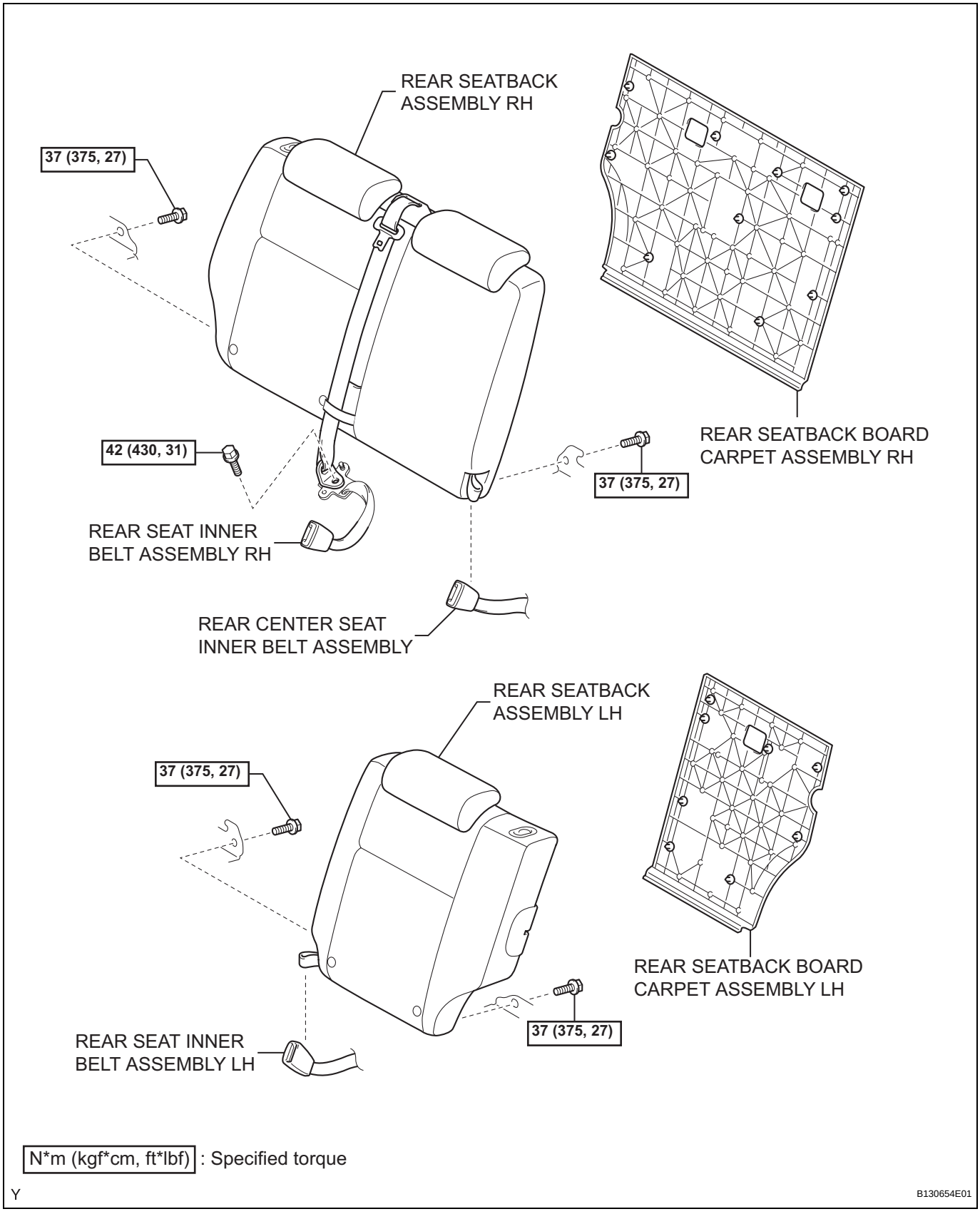

LI

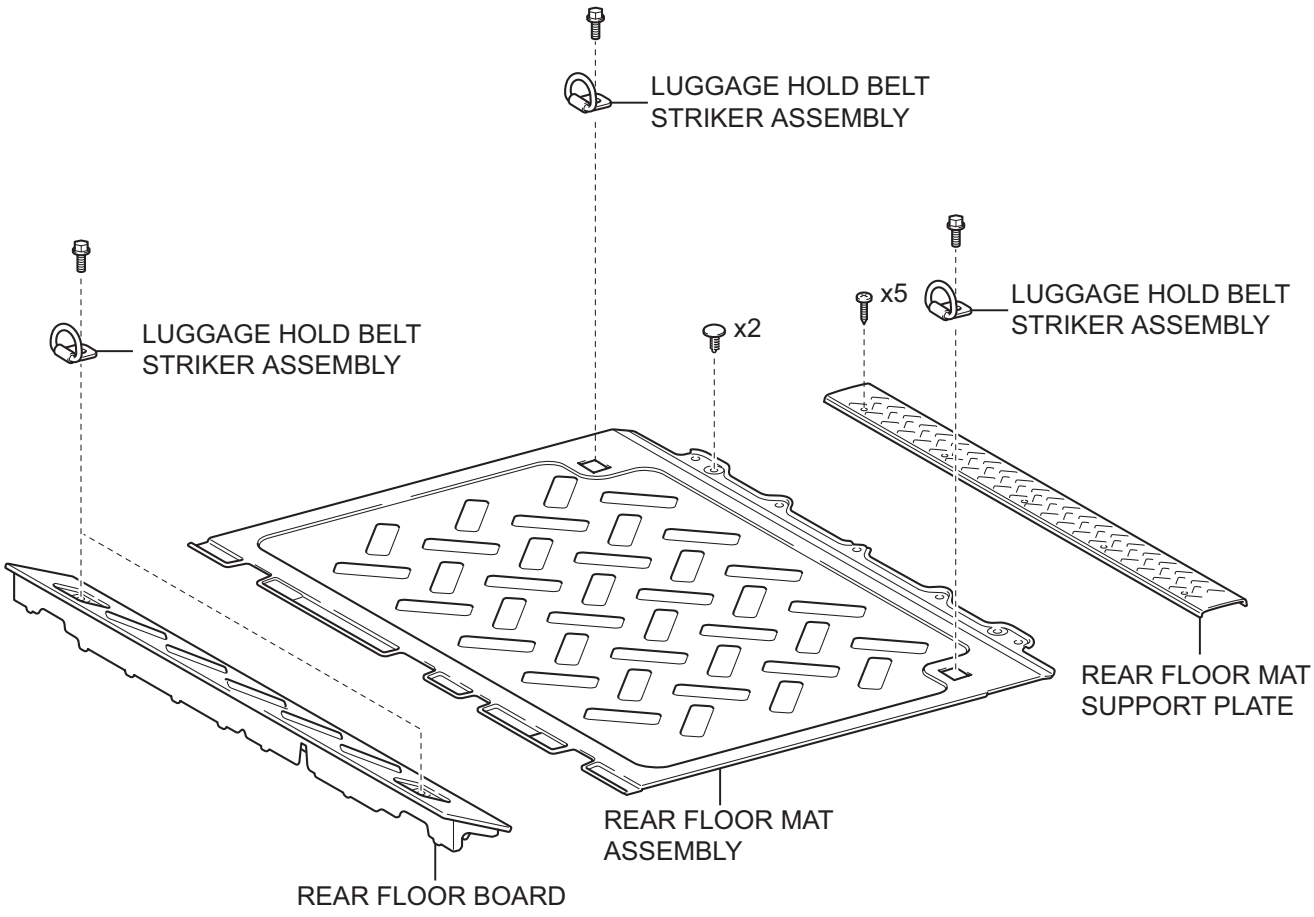

Y

B130655E01

RH Side:

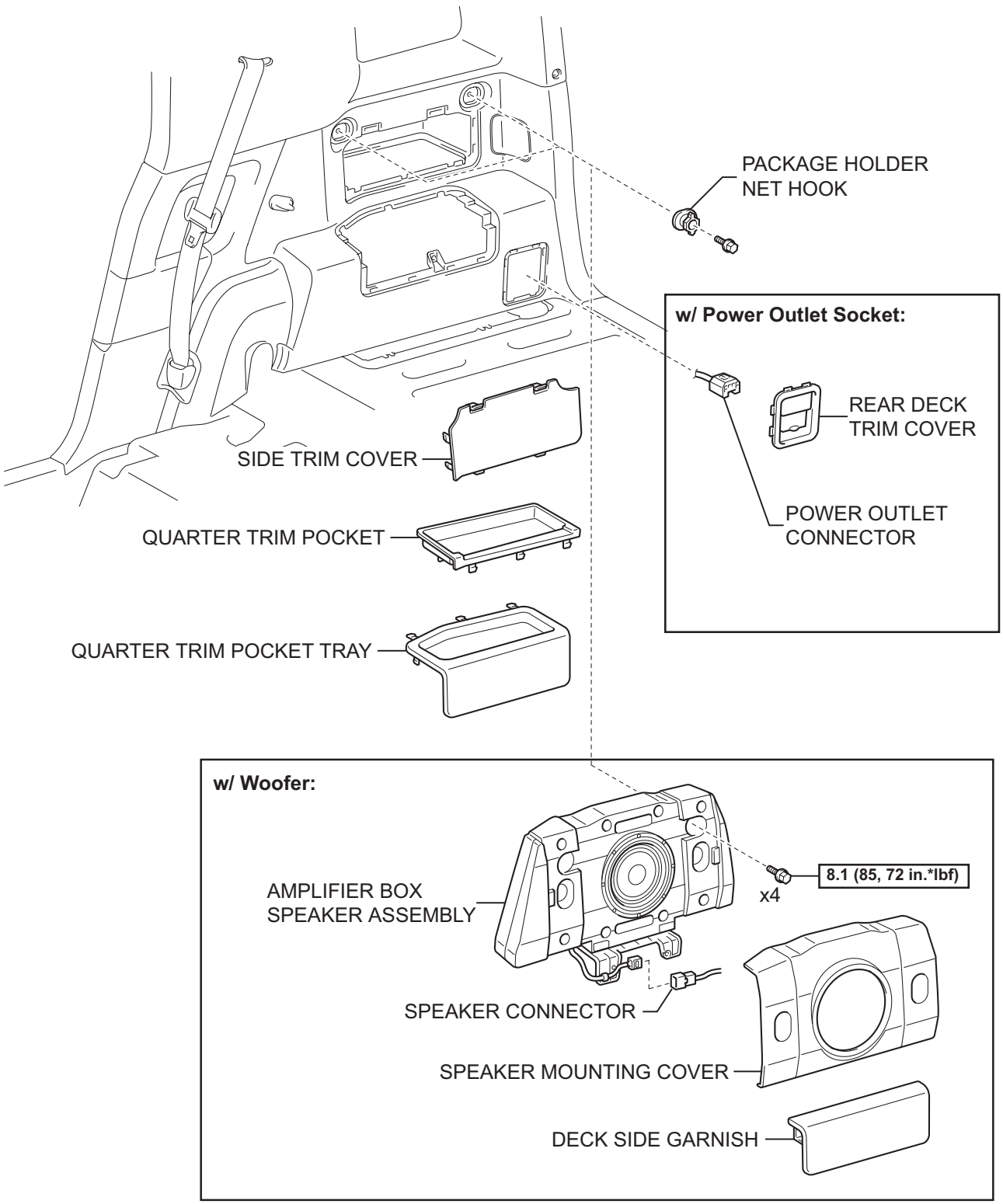

N*m (kgf*cm, ft*lbf) : Specified torque

Y

B134989E02

LI

RH Side:

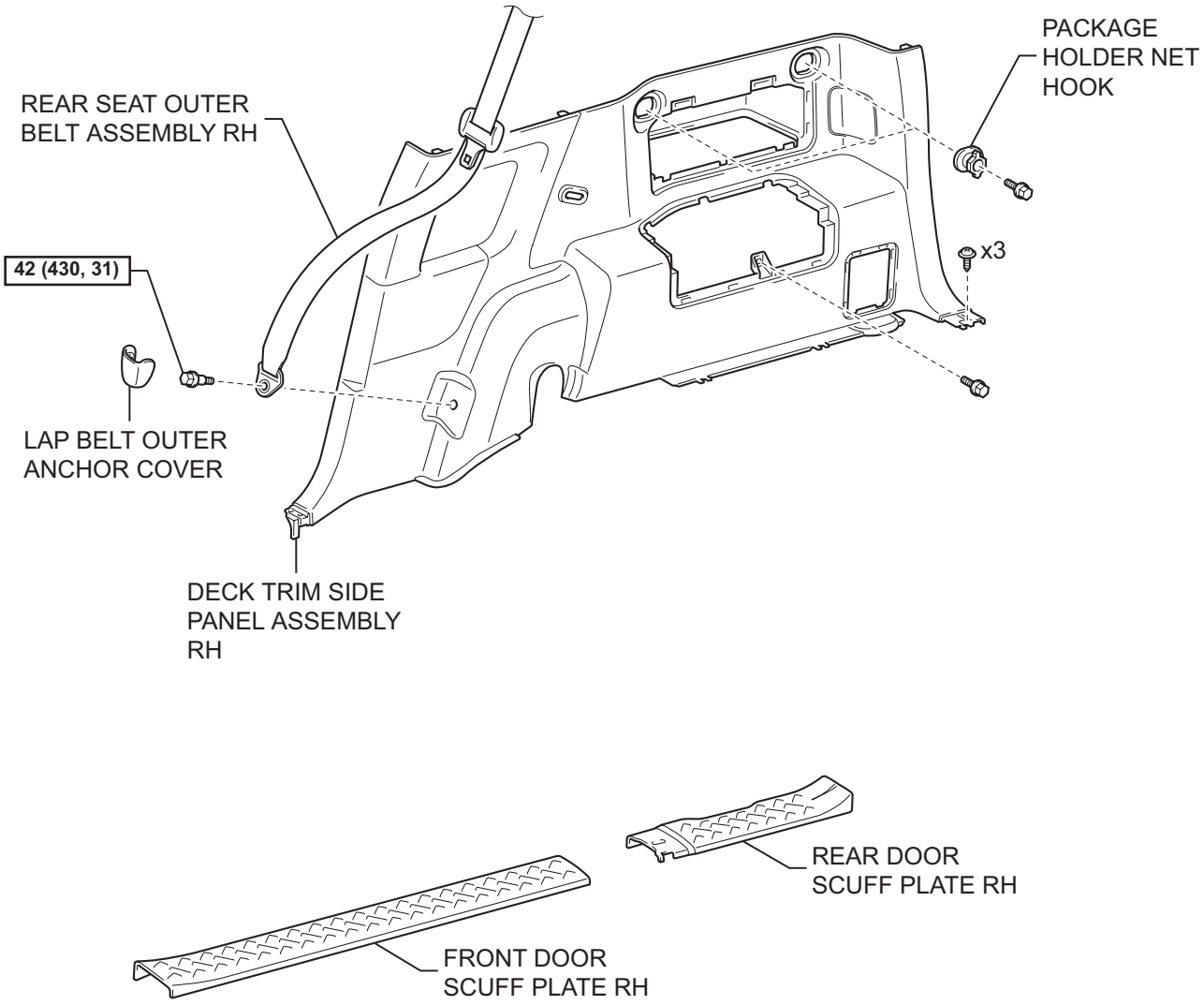

N*m (kgf*cm, ft*lbf) : Specified torque

Y

B140021E01

LH Side:

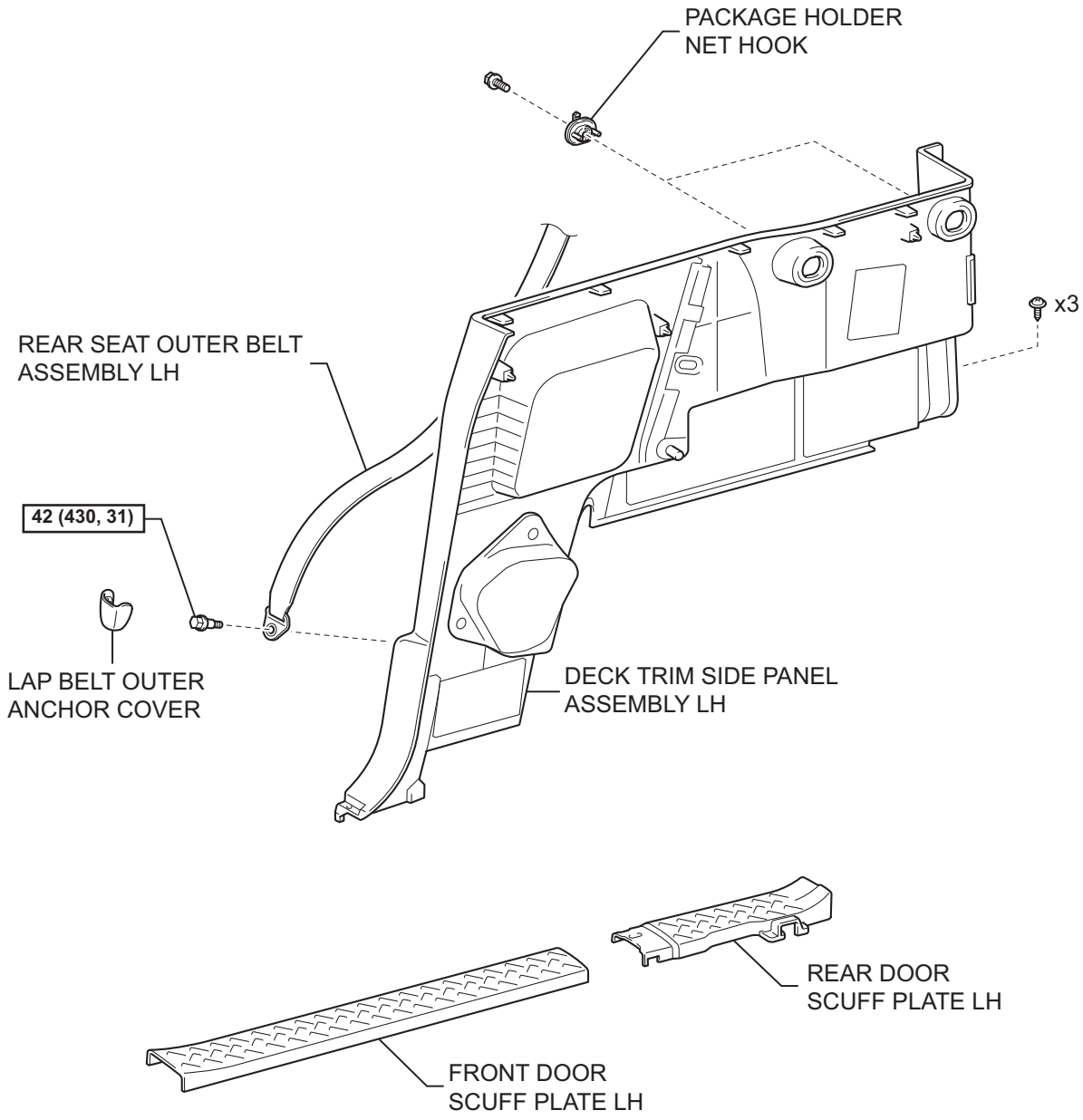

N*m (kgf*cm, ft*lbf) : Specified torque

Y

B140020E01

LI

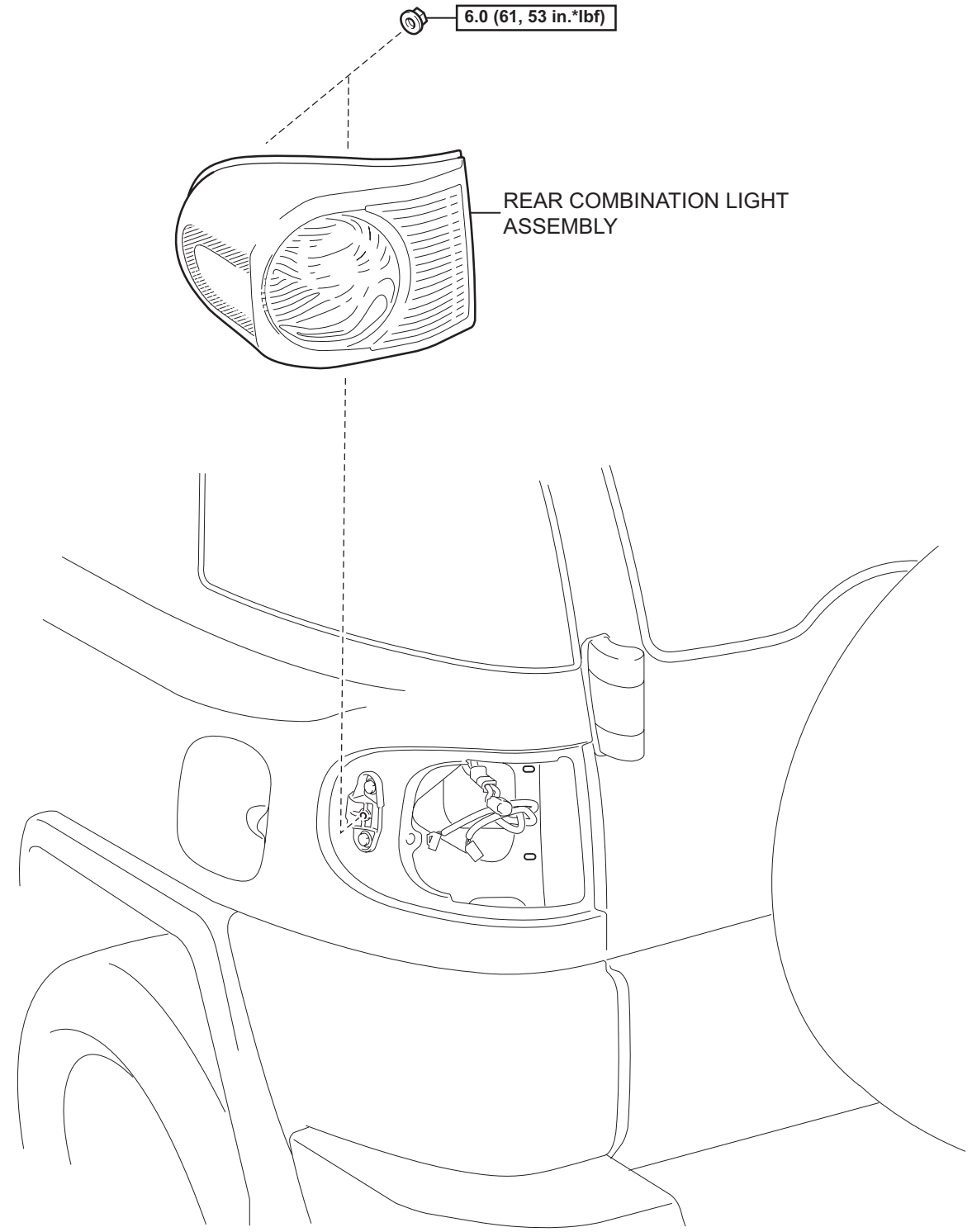

N*m (kgf*cm, ft*lbf) : Specified torque

T

E127209E01

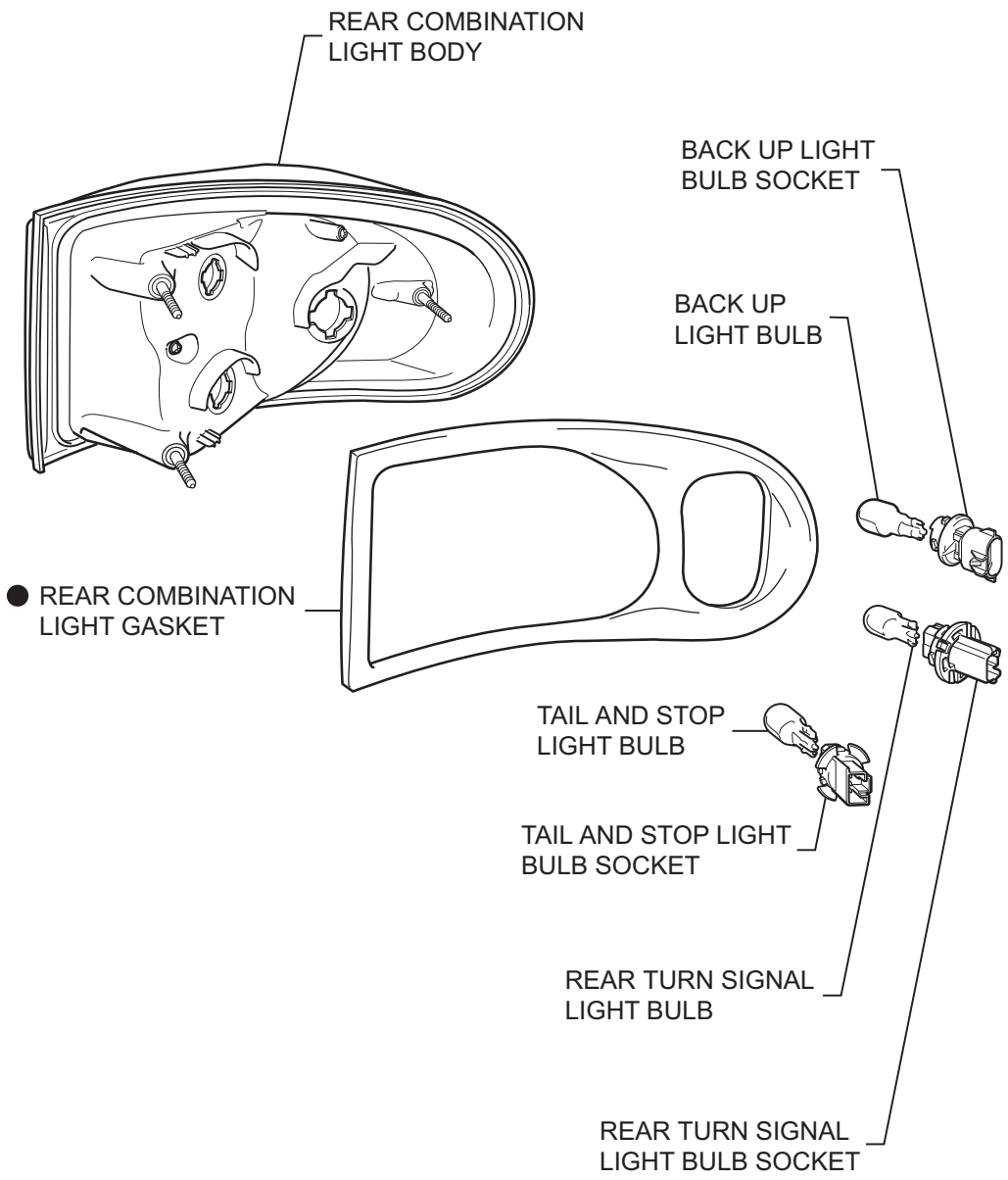

● Non-reusable part

T

E127210E01

LI

REMOVAL

HINT:

- Use the same procedure for both the RH and LH sides, unless otherwise specified.
- The procedure described below is for the LH side.

1. **DISCONNECT CABLE FROM NEGATIVE BATTERY TERMINAL**
2. **REMOVE REAR SEATBACK BOARD CARPET ASSEMBLY RH (See page SE-43)**
3. **REMOVE REAR SEATBACK ASSEMBLY RH (See page SE-43)**
4. **REMOVE REAR SEATBACK BOARD CARPET ASSEMBLY LH (See page SE-29)**
5. **REMOVE REAR SEATBACK ASSEMBLY LH (See page SE-29)**
6. **REMOVE REAR FLOOR BOARD (See page IR-13)**
7. **REMOVE REAR FLOOR MAT SUPPORT PLATE (See page IR-14)**
8. **REMOVE REAR FLOOR MAT ASSEMBLY (See page IR-15)**
9. **REMOVE LUGGAGE HOLD BELT STRIKER ASSEMBLY (See page IR-14)**
10. **REMOVE FRONT DOOR SCUFF PLATE RH (See page IR-15)**
11. **REMOVE FRONT DOOR SCUFF PLATE LH (See page IR-15)**
12. **REMOVE REAR DOOR SCUFF PLATE RH (See page IR-15)**
13. **REMOVE REAR DOOR SCUFF PLATE LH (See page IR-15)**
14. **REMOVE FRONT DOOR OPENING TRIM WEATHERSTRIP RH (See page IR-16)**
15. **REMOVE FRONT DOOR OPENING TRIM WEATHERSTRIP LH (See page IR-16)**
16. **REMOVE DECK SIDE GARNISH (w/ Woofer) (See page IR-18)**
17. **REMOVE SPEAKER MOUNTING COVER (w/ Woofer) (See page AV-90)**
18. **REMOVE BOX SPEAKER ASSEMBLY (w/ Woofer) (See page AV-90)**
19. **REMOVE PACKAGE HOLDER NET HOOK (See page IR-18)**
20. **REMOVE QUARTER TRIM POCKET TRAY (w/o Woofer) (See page IR-19)**

21. **REMOVE SIDE TRIM COVER (w/o Woofer) (See page IR-19)**
22. **REMOVE QUARTER TRIM POCKET (w/o Woofer) (See page IR-19)**
23. **REMOVE LAP BELT OUTER ANCHOR COVER (See page IR-20)**
24. **REMOVE REAR SEAT OUTER BELT ASSEMBLY RH (See page IR-20)**
25. **REMOVE REAR SEAT OUTER BELT ASSEMBLY LH (See page IR-20)**
26. **REMOVE REAR DECK TRIM COVER (w/ Power Outlet Socket) (See page IR-20)**
27. **REMOVE DECK TRIM SIDE PANEL ASSEMBLY RH (See page IR-21)**
28. **REMOVE DECK TRIM SIDE PANEL ASSEMBLY LH (See page IR-21)**
29. **REMOVE REAR COMBINATION LIGHT ASSEMBLY**
    (a) Remove the 3 nuts.
    (b) Disconnect the 3 connectors and remove the rear combination light.

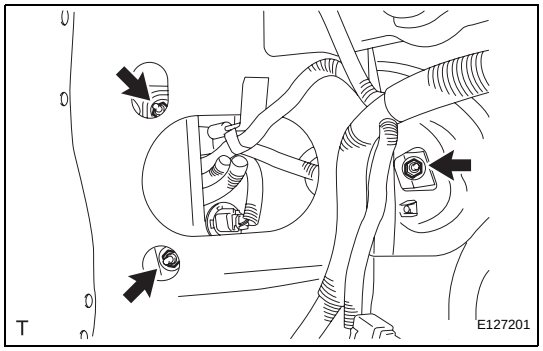

DISASSEMBLY

1. **REMOVE REAR COMBINATION LIGHT GASKET**
    (a) Remove the rear combination light gasket.
    NOTICE:
    - **Detach the gasket if it adheres to the body.**
    - **Do not reuse a removed gasket. Replace it with a new one to prevent water from entering.**

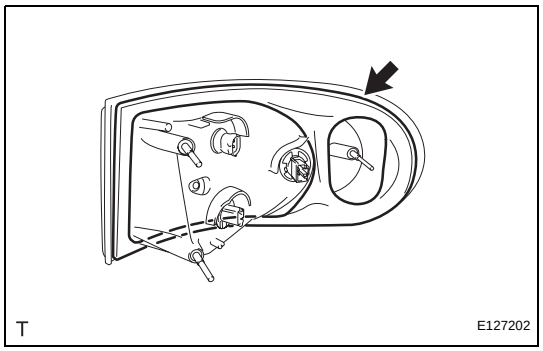

2. **REMOVE TAIL AND STOP LIGHT BULB**
    (a) Turn the rear combination light socket and bulb, in the direction indicated by the arrow in the illustration, to remove them.
    (b) Remove the rear combination light bulb from the light socket.

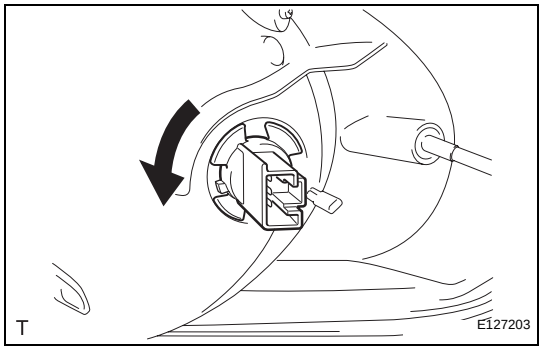

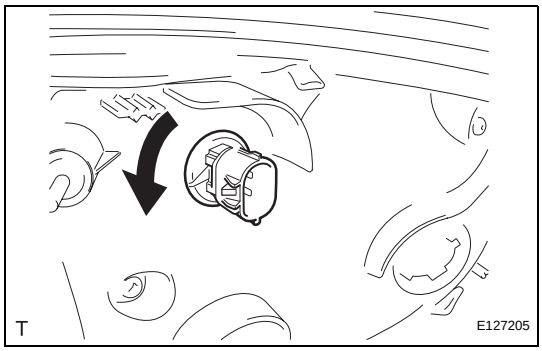

3. REMOVE BACK UP LIGHT BULB

(a) Turn the rear combination light socket and bulb, in the direction indicated by the arrow in the illustration, to remove them.

(b) Remove the rear combination light bulb from the light socket.

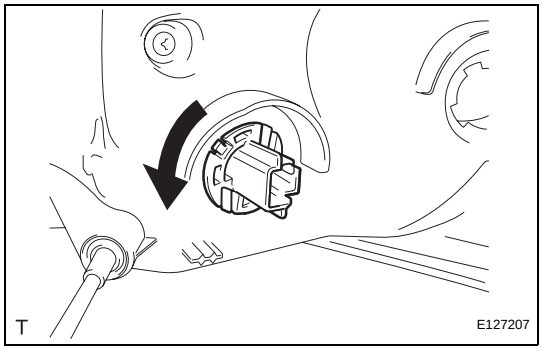

4. REMOVE REAR TURN SIGNAL LIGHT BULB

(a) Turn the rear combination light socket and bulb, in the direction indicated by the arrow in the illustration, to remove them.

(b) Remove the rear combination light bulb from the light socket.

LI

REASSEMBLY

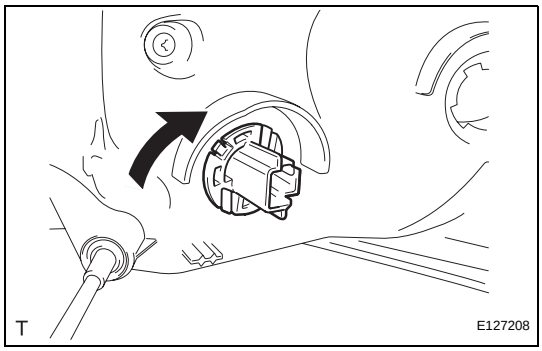

1. INSTALL REAR TURN SIGNAL LIGHT BULB

(a) Install the rear combination light bulb into the light socket.

(b) Turn the rear combination light socket and bulb, in the direction indicated by the arrow in the illustration, to install them.

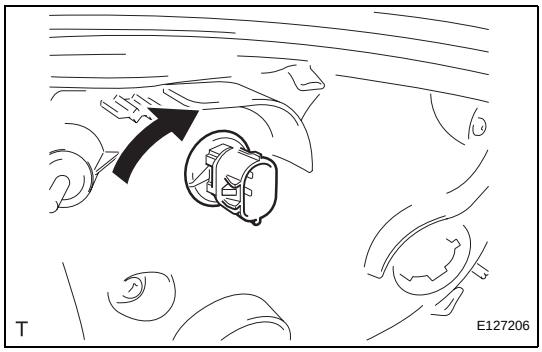

2. INSTALL BACK UP LIGHT BULB

(a) Install the rear combination light bulb into the light socket.

(b) Turn the rear combination light socket and bulb, in the direction indicated by the arrow in the illustration, to install them.

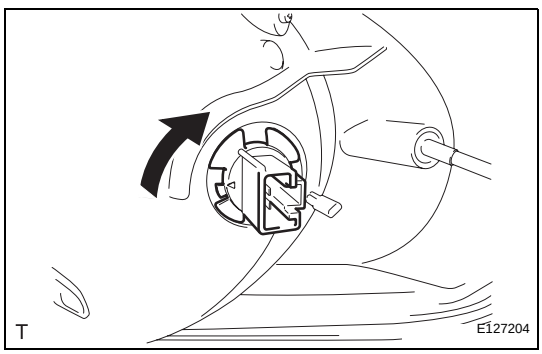

3. INSTALL TAIL AND STOP LIGHT BULB

(a) Install the rear combination light bulb into the light socket.

(b) Turn the rear combination light socket and bulb, in the direction indicated by the arrow in the illustration, to install them.

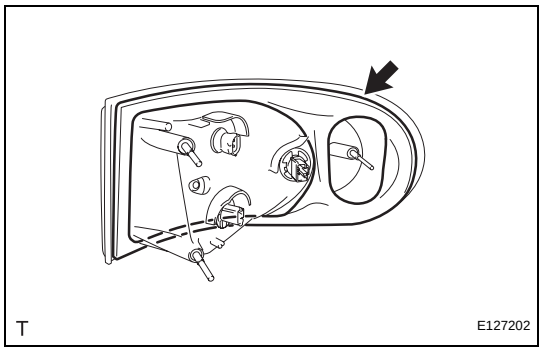

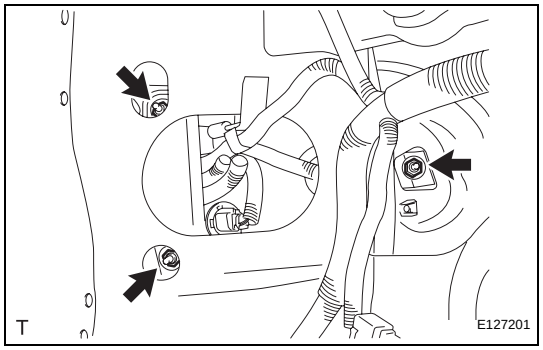

4. **INSTALL REAR COMBINATION LIGHT GASKET**
   (a) Install a new rear combination light gasket.

INSTALLATION

1. **INSTALL REAR COMBINATION LIGHT ASSEMBLY**
   (a) Connect the 3 connectors and install the rear combination light.
   (b) Install the 3 nuts.
   Torque: 6.0 N*m (61 kgf*cm, 53 in.*lbf)
2. **INSTALL DECK TRIM SIDE PANEL ASSEMBLY RH (See page IR-39)**
3. **INSTALL DECK TRIM SIDE PANEL ASSEMBLY LH (See page IR-39)**
4. **INSTALL REAR DECK TRIM COVER (w/ Power Outlet Socket) (See page IR-40)**
5. **INSTALL REAR SEAT OUTER BELT ASSEMBLY RH (See page IR-40)**
6. **INSTALL REAR SEAT OUTER BELT ASSEMBLY LH (See page IR-40)**
7. **INSTALL LAP BELT OUTER ANCHOR COVER (See page IR-41)**
8. **INSTALL BOX SPEAKER ASSEMBLY (w/ Woofer) (See page AV-90)**
9. **INSTALL SPEAKER MOUNTING COVER (w/ Woofer) (See page AV-91)**
10. **INSTALL DECK SIDE GARNISH (w/ Woofer) (See page IR-41)**
11. **INSTALL QUARTER TRIM POCKET (w/o Woofer) (See page IR-41)**
12. **INSTALL SIDE TRIM COVER (w/o Woofer) (See page IR-42)**
13. **INSTALL QUARTER TRIM POCKET TRAY (w/o Woofer) (See page IR-42)**
14. **INSTALL PACKAGE HOLDER NET HOOK (See page IR-42)**
15. **INSTALL FRONT DOOR OPENING TRIM WEATHERSTRIP RH (See page IR-44)**
16. **INSTALL FRONT DOOR OPENING TRIM WEATHERSTRIP LH (See page IR-44)**

17. **INSTALL REAR DOOR SCUFF PLATE RH (See page IR-45)**
18. **INSTALL REAR DOOR SCUFF PLATE LH (See page IR-45)**
19. **INSTALL FRONT DOOR SCUFF PLATE RH (See page IR-45)**
20. **INSTALL FRONT DOOR SCUFF PLATE LH (See page IR-45)**
21. **INSTALL LUGGAGE HOLD BELT STRIKER ASSEMBLY (See page IR-46)**
22. **INSTALL REAR FLOOR MAT ASSEMBLY (See page IR-46)**
23. **INSTALL REAR FLOOR MAT SUPPORT PLATE (See page IR-46)**
24. **INSTALL REAR FLOOR BOARD (See page IR-47)**
25. **INSTALL REAR SEATBACK ASSEMBLY RH (See page SE-54)**
26. **INSTALL REAR SEATBACK BOARD CARPET ASSEMBLY RH (See page SE-54)**
27. **INSTALL REAR SEATBACK ASSEMBLY LH (See page SE-38)**
28. **INSTALL REAR SEATBACK BOARD CARPET ASSEMBLY LH (See page SE-38)**
29. **CONNECT CABLE TO NEGATIVE BATTERY TERMINAL**
    Torque: 3.9 N*m (40 kgf*cm, 35 in.*lbf)

LICENSE PLATE LIGHT ASSEMBLY

COMPONENTS

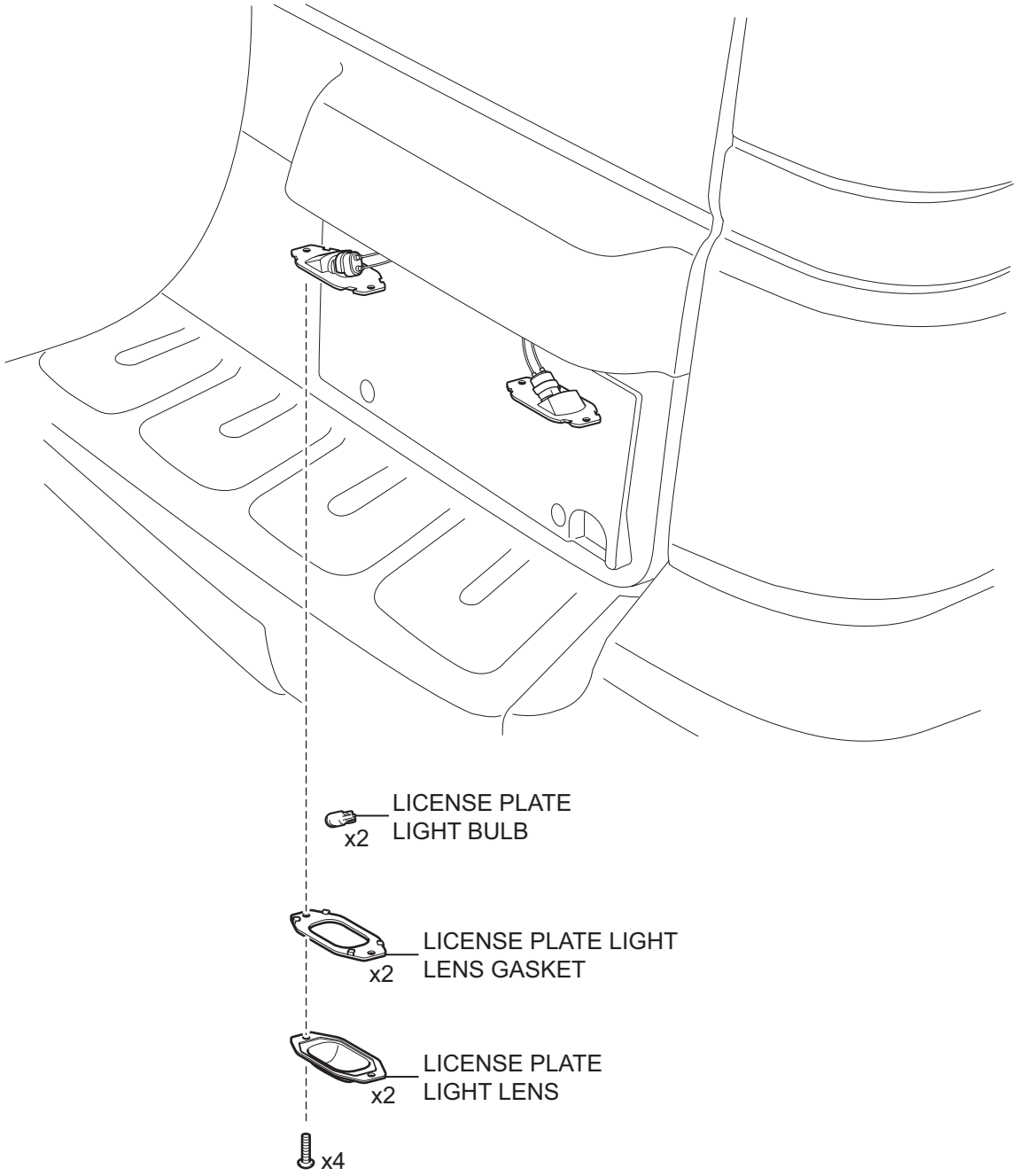

T

E127214E01

REMOVAL

1. DISCONNECT CABLE FROM NEGATIVE BATTERY TERMINAL

2. REMOVE LICENSE PLATE LIGHT LENS

(a) Remove the 2 screws and license plate light lens.

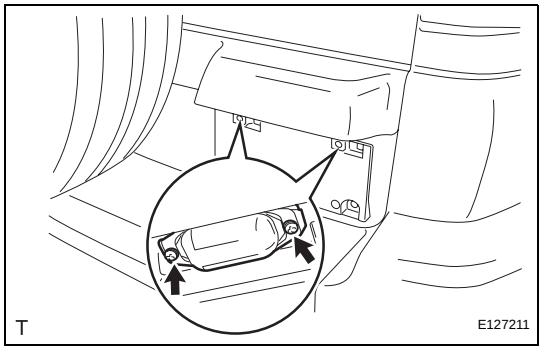

3. REMOVE LICENSE PLATE LIGHT LENS GASKET

(a) Remove the license plate light lens gasket.

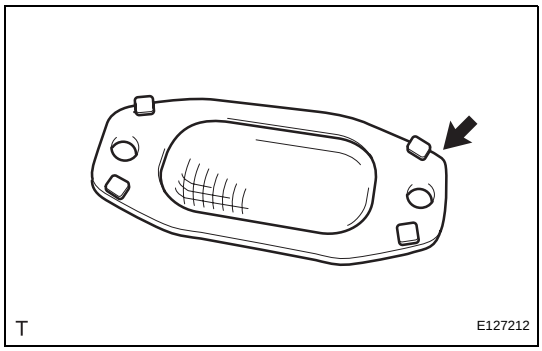

4. REMOVE LICENSE PLATE LIGHT BULB

(a) Remove the license plate light bulb from the socket.

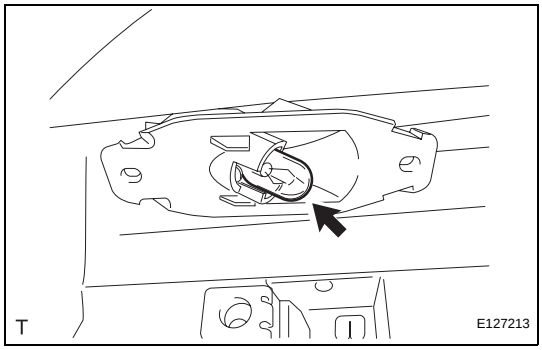

INSTALLATION

1. INSTALL LICENSE PLATE LIGHT BULB

(a) Install the license plate light bulb into the socket.

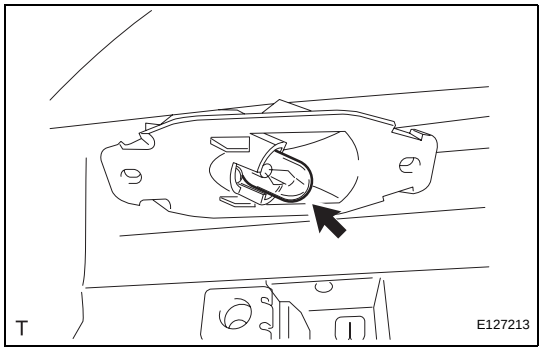

LI

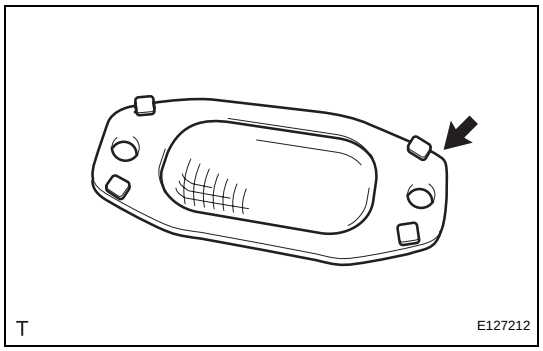

2. INSTALL LICENSE PLATE LIGHT LENS GASKET

(a) Install the license plate light lens gasket onto the license plate light lens.

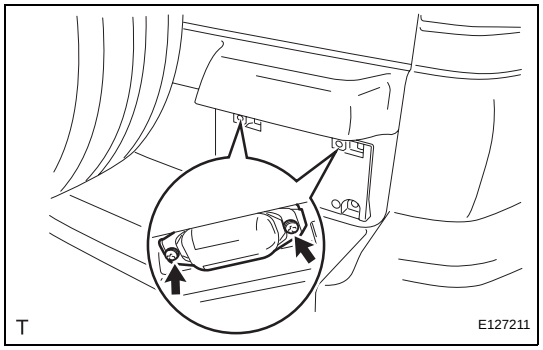

3. INSTALL LICENSE PLATE LIGHT LENS

(a) Install the license plate light lens with the 2 screws.

4. CONNECT CABLE TO NEGATIVE BATTERY TERMINAL

Torque: 3.9 N*m (40 kgf*cm, 35 in.*lbf)

HIGH MOUNTED STOP LIGHT ASSEMBLY

COMPONENTS

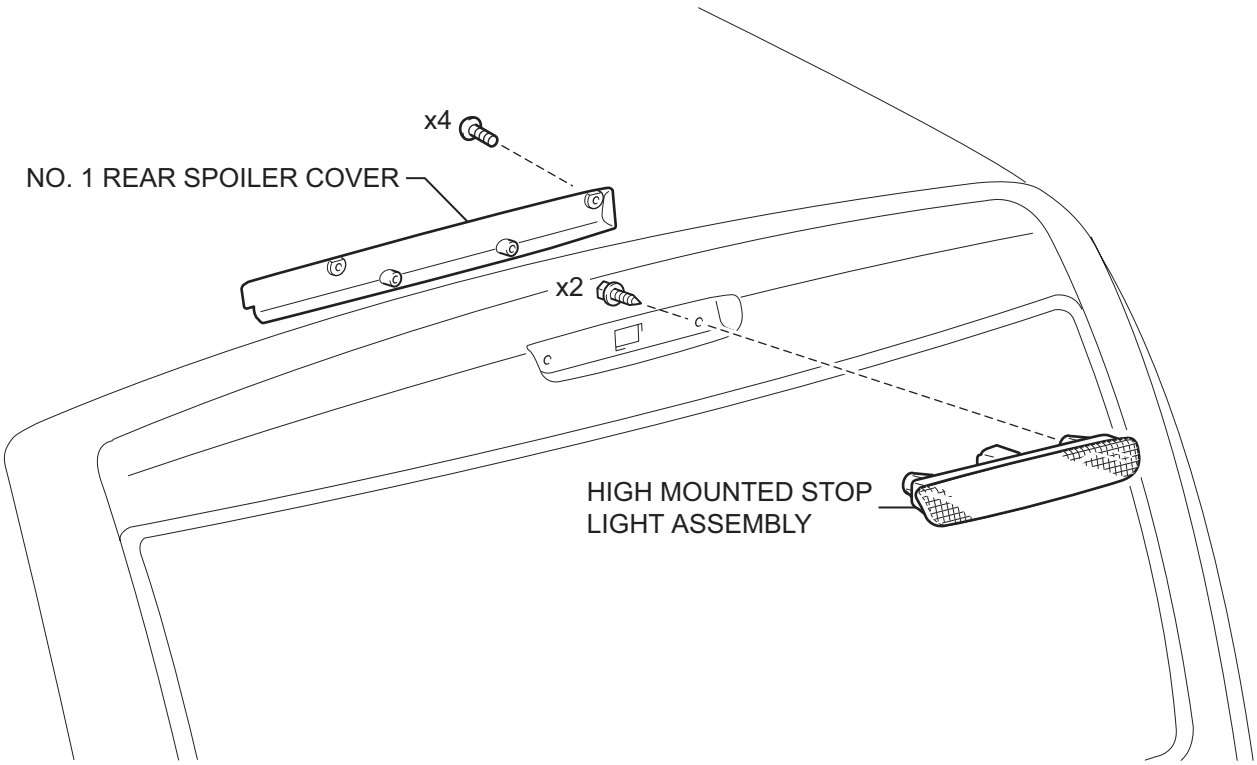

T

E127217E01

REMOVAL

1. DISCONNECT CABLE FROM NEGATIVE BATTERY TERMINAL

2. REMOVE NO. 1 REAR SPOILER COVER

(a) Remove the 4 screws and No. 1 rear spoiler cover.

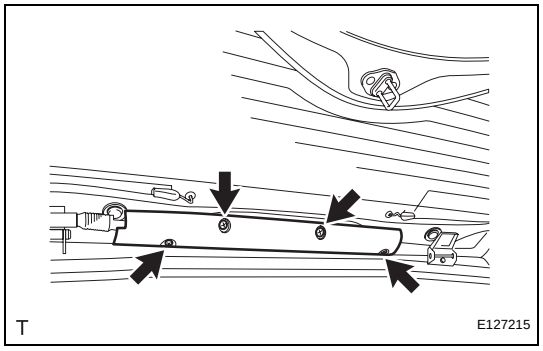

3. REMOVE HIGH MOUNTED STOP LIGHT ASSEMBLY

(a) Remove the 2 screws.

(b) Disconnect the connector and remove the high mounted stop light.

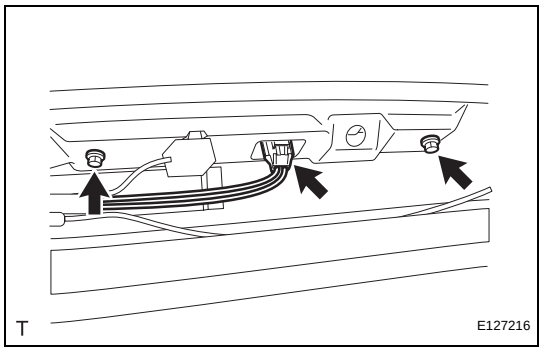

INSTALLATION

1. INSTALL HIGH MOUNTED STOP LIGHT ASSEMBLY

(a) Connect the connector.

(b) Install the high mounted stop light with the 2 screws.

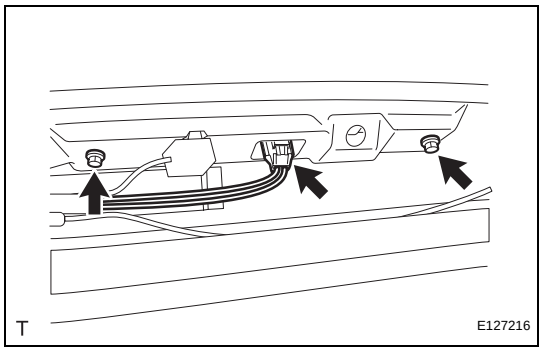

2. INSTALL NO. 1 REAR SPOILER COVER

(a) Install the No. 1 rear spoiler cover with the 4 screws.

3. CONNECT CABLE TO NEGATIVE BATTERY TERMINAL

Torque: 3.9 N*m (40 kgf*cm, 35 in.*lbf)

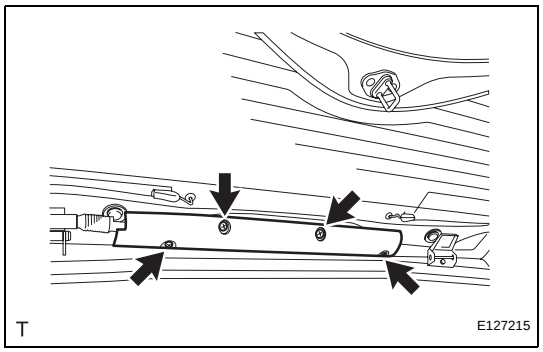

LI

ROOM LIGHT ASSEMBLY

COMPONENTS

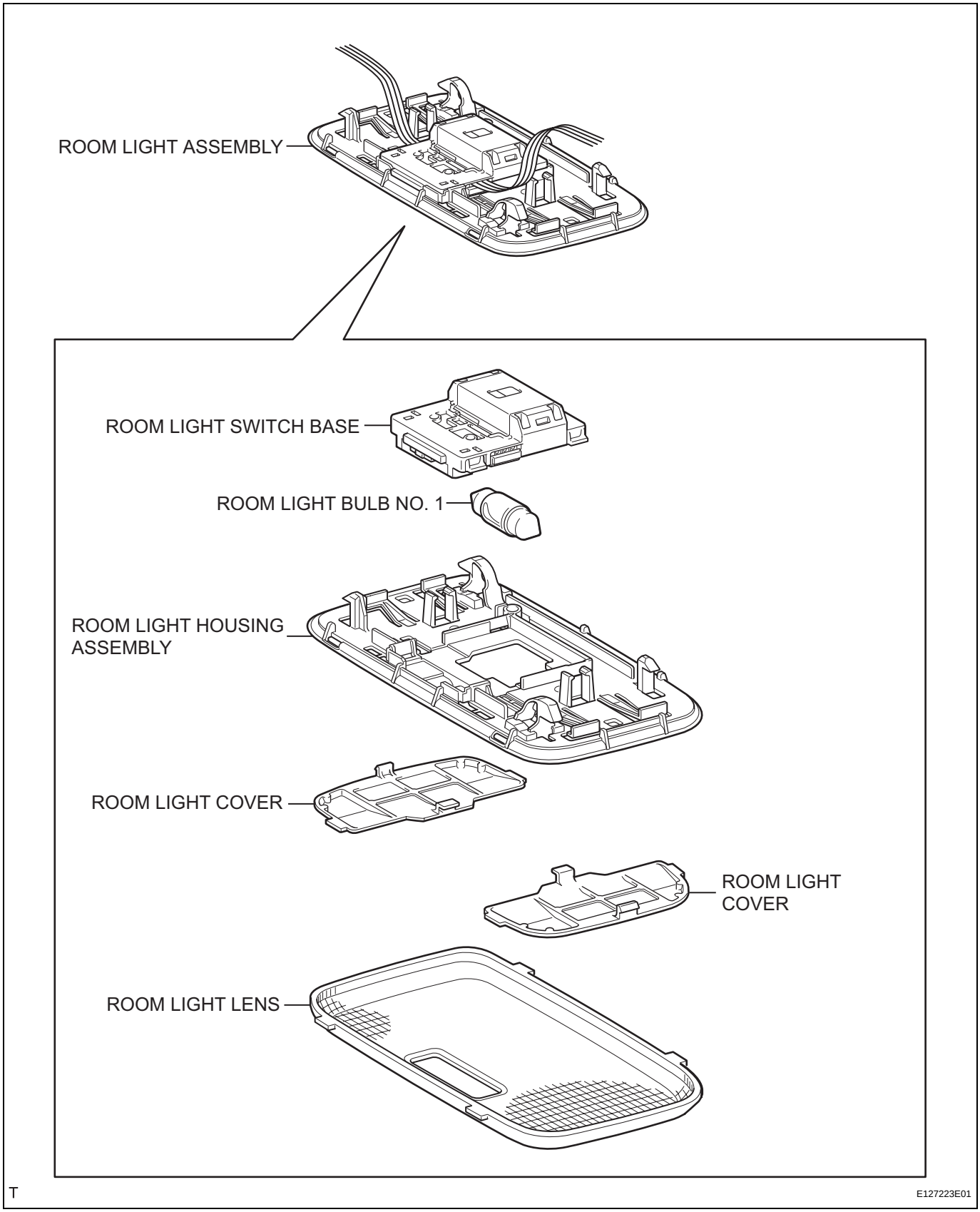

REMOVAL

1. DISCONNECT CABLE FROM NEGATIVE BATTERY TERMINAL

2. REMOVE ROOM LIGHT ASSEMBLY

(a) Using a screwdriver with its tip wrapped in protective tape, disengage the 4 claws and remove the room light lens.

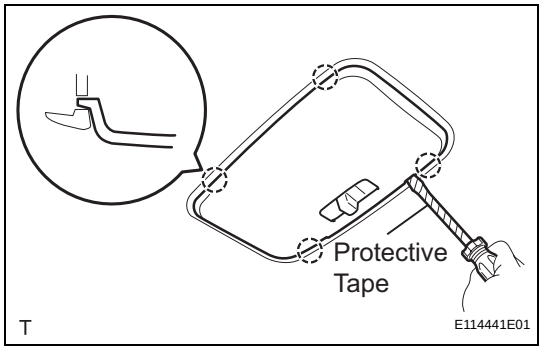

(b) Using a screwdriver with its tip wrapped in protective tape, disengage the 4 claws and remove the 2 covers.

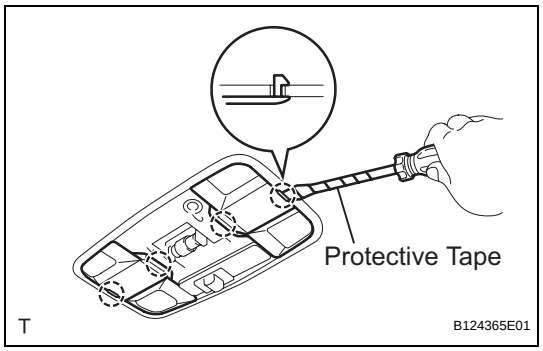

(c) Using a screwdriver with its tip wrapped in protective tape, disengage the 4 claws.

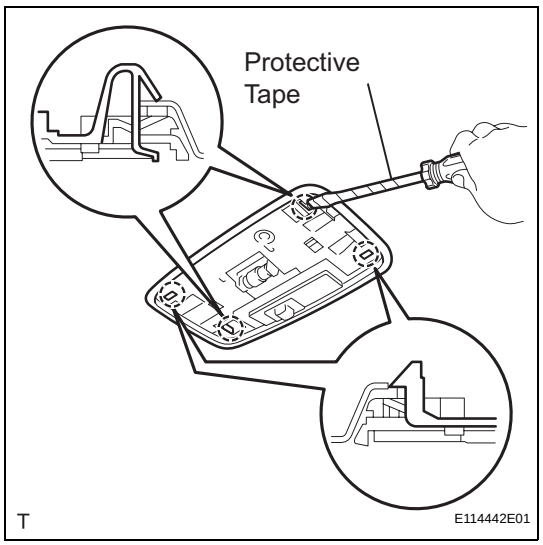

LI

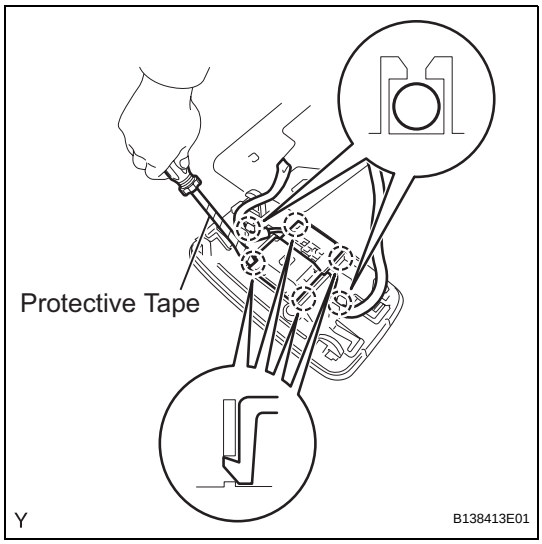

(d) Disengage the roof wire from the claw of the room light.
(e) Using a screwdriver with its tip wrapped in protective tape, disengage the 4 claws and remove the room light switch base.
(f) Remove room light bulb No. 1.

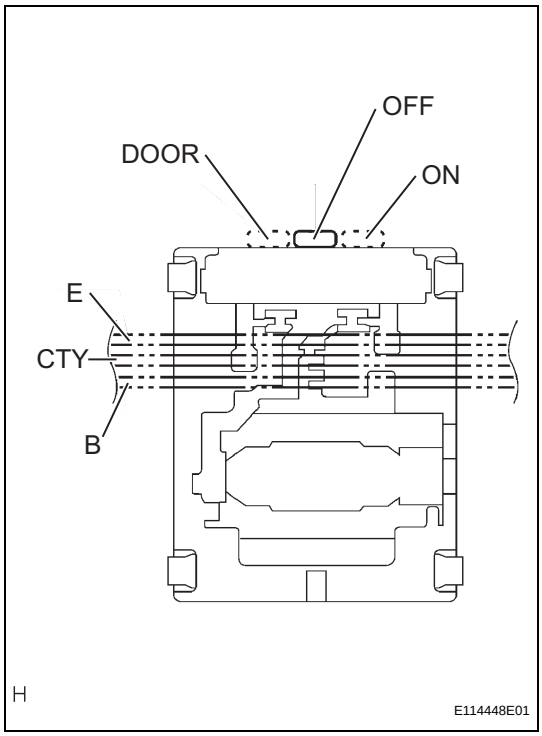

INSPECTION

1. INSPECT ROOM LIGHT ASSEMBLY

(a) Check the resistance.
(1) Using an ohmmeter, measure the resistance and check the results in accordance with the value(s) in the table below.

Standard Resistance

Tester Connection	Condition	Specified Condition
-	OFF	10 kΩ or higher
CTY - B	DOOR	Below 1 Ω
B - E	ON	Below 1 Ω

If the result is not as specified, replace the room light.

(b) Check the light operation.
(1) Connect the positive (+) battery lead to terminal B and the negative (-) battery lead to terminal CTY, then check that the light illuminates when the switch is in the DOOR position.

Standard:

Light illuminates.

If the light does not illuminate, replace the bulb.

(2) Connect the positive (+) battery lead to terminal B and the negative (-) battery lead to terminal E, then check that the light illuminates when the switch is in the ON position.

Standard:

Light illuminates.

If the light does not illuminate, replace the bulb.

INSTALLATION

1. INSTALL ROOM LIGHT ASSEMBLY

(a) Install room light bulb No. 1.

(b) Engage the 4 claws and install the room light switch base.

(c) Install the roof wire into the claw of the room light.

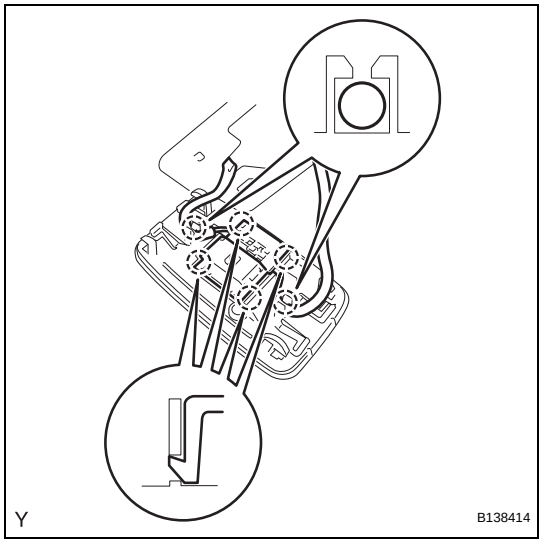

(d) Engage the 4 claws and install the room light.

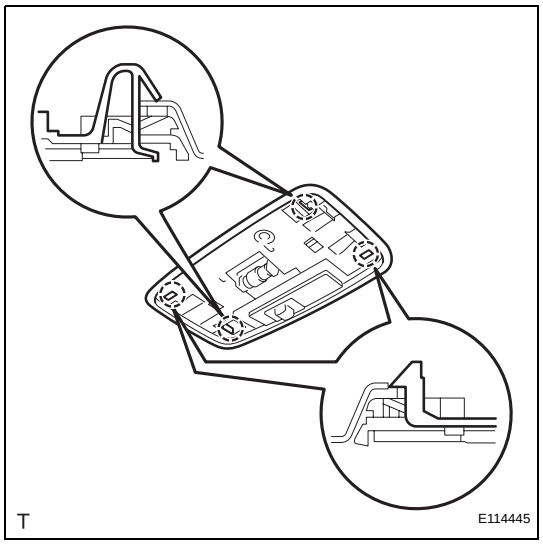

(e) Engage the 4 claws and install the 2 covers.

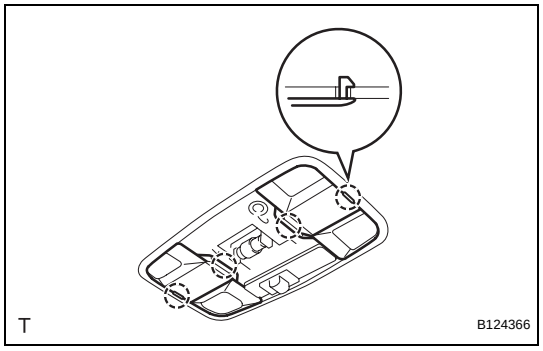

LI

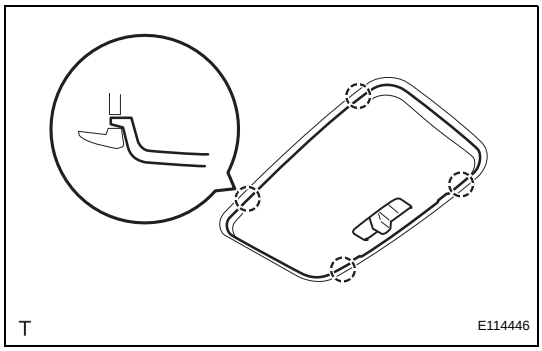

(f) Engage the 4 claws and install the room light lens.

2. CONNECT CABLE TO NEGATIVE BATTERY TERMINAL
Torque: 3.9 N*m (40 kgf*cm, 35 in.*lbf)

REAR ROOM LIGHT ASSEMBLY

COMPONENTS

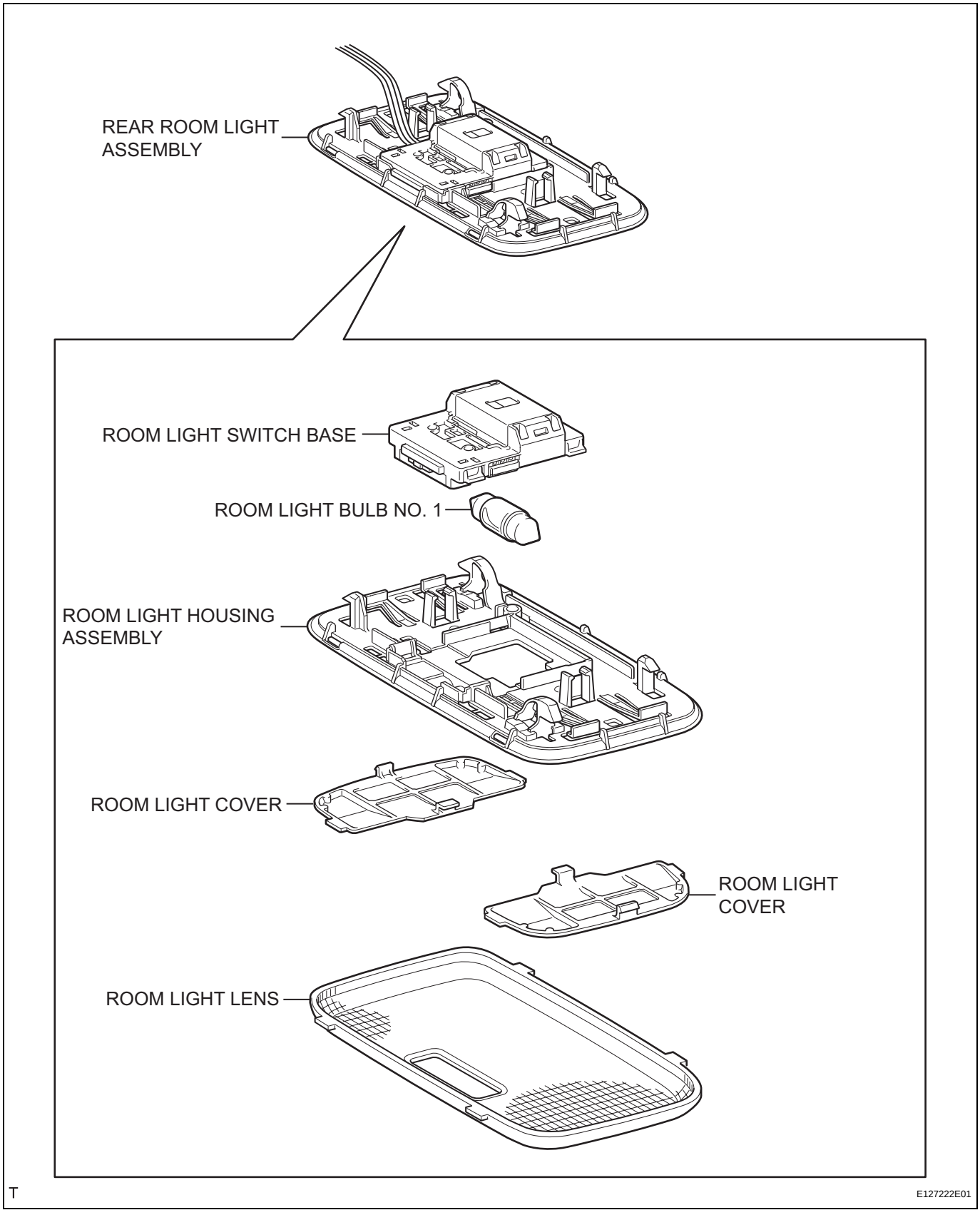

REMOVAL

1. DISCONNECT CABLE FROM NEGATIVE BATTERY TERMINAL

2. REMOVE REAR ROOM LIGHT ASSEMBLY

(a) Using a screwdriver with its tip wrapped in protective tape, disengage the 4 claws and remove the room light lens.

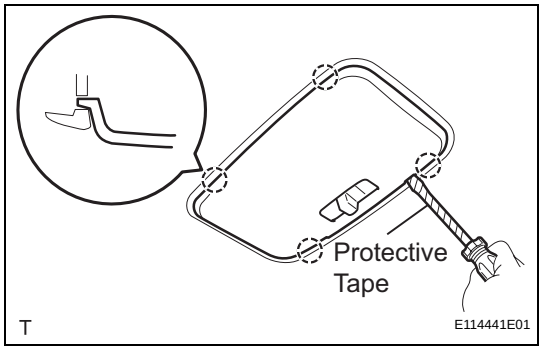

(b) Using a screwdriver with its tip wrapped in protective tape, disengage the 4 claws and remove the 2 covers.

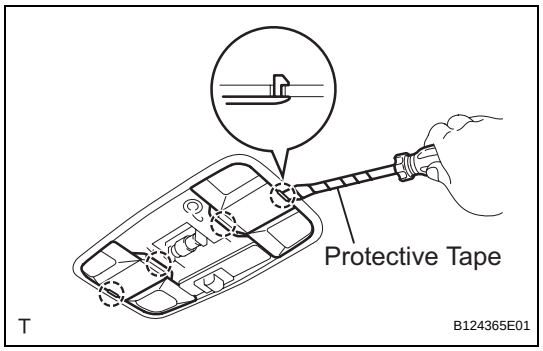

(c) Using a screwdriver with its tip wrapped in protective tape, disengage the 4 claws.

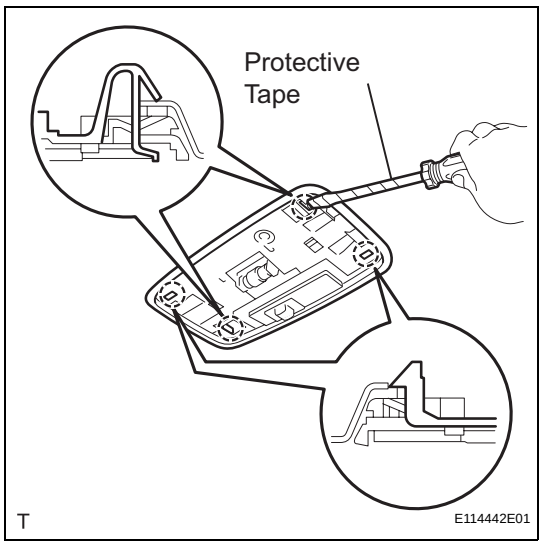

LI

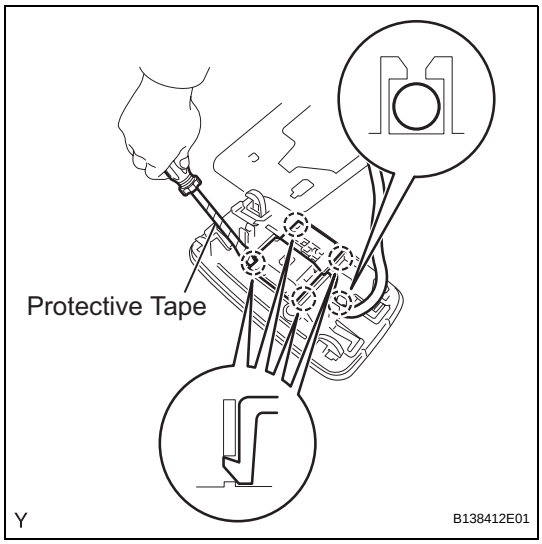

(d) Disengage the roof wire from the claw of the room light.
(e) Using a screwdriver with its tip wrapped in protective tape, disengage the 4 claws and remove the room light switch base.
(f) Remove room light bulb No. 1.

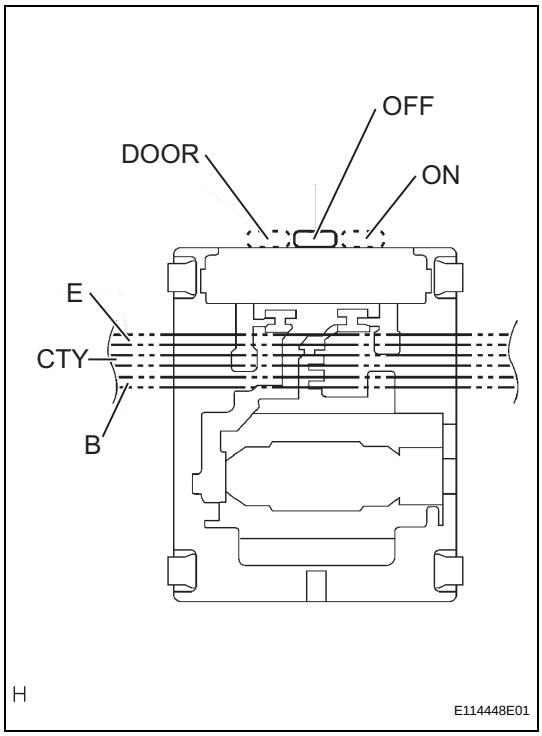

INSPECTION

1. INSPECT REAR ROOM LIGHT ASSEMBLY

(a) Check the resistance.
(1) Using an ohmmeter, measure the resistance and check the results in accordance with the value(s) in the table below.

Standard Resistance

Tester Connection	Condition	Specified Condition
-	OFF	10 kΩ or higher
CTY - B	DOOR	Below 1 Ω
B - E	ON	Below 1 Ω

If the result is not as specified, replace the room light.

(b) Check the light operation.
(1) Connect the positive (+) battery lead to terminal B and the negative (-) battery lead to terminal CTY, then check that the light illuminates when the switch is in the DOOR position.

Standard:

Light illuminates.

If the light does not illuminate, replace the bulb.

(2) Connect the positive (+) battery lead to terminal B and the negative (-) battery lead to terminal E, then check that the light illuminates when the switch is in the ON position.

Standard:

Light illuminates.

If the light does not illuminate, replace the bulb.

INSTALLATION

1. INSTALL REAR ROOM LIGHT ASSEMBLY

(a) Install room light bulb No. 1.

(b) Engage the 4 claws and install the room light switch base.

(c) Install the roof wire into the claw of the room light.

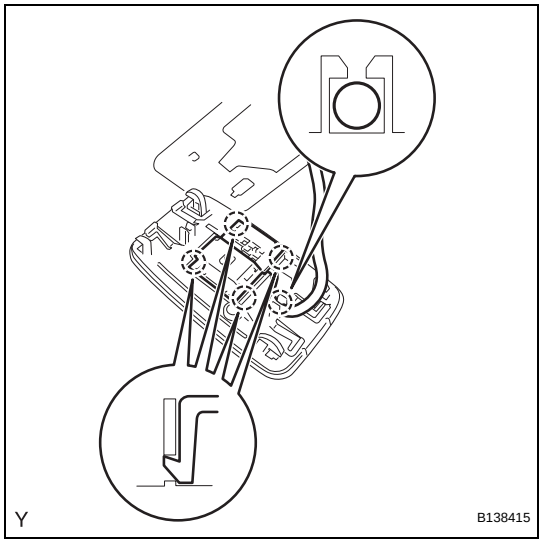

(d) Engage the 4 claws and install the room light.

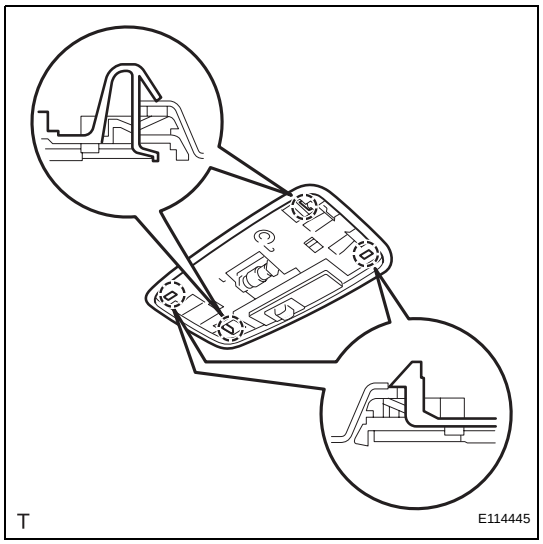

(e) Engage the 4 claws and install the 2 covers.

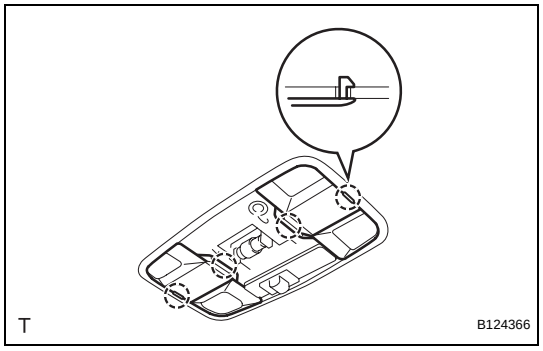

LI

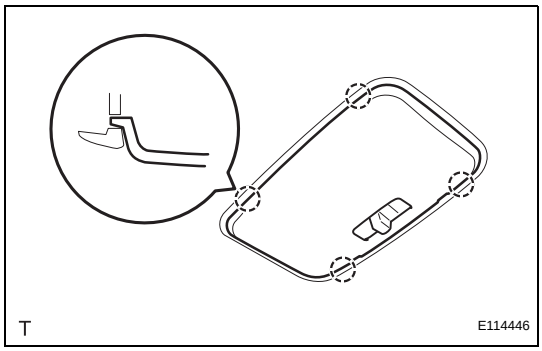

(f) Engage the 4 claws and install the room light lens.

2. CONNECT CABLE TO NEGATIVE BATTERY TERMINAL
Torque: 3.9 N*m (40 kgf*cm, 35 in.*lbf)

HEADLIGHT DIMMER SWITCH

COMPONENTS

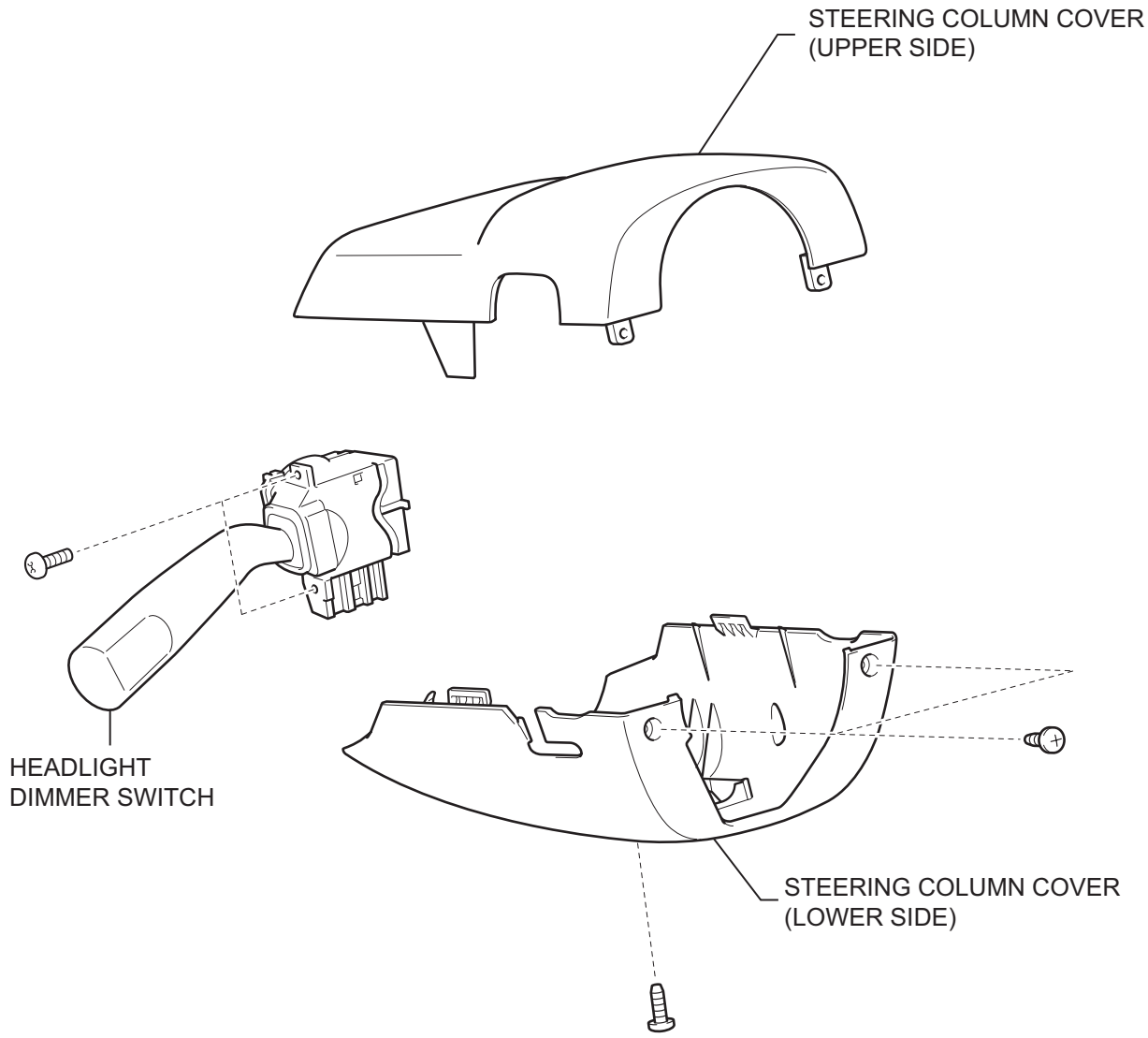

T

E127236E01

REMOVAL

1. DISCONNECT CABLE FROM NEGATIVE BATTERY TERMINAL

2. REMOVE STEERING COLUMN COVER

(a) Turn the steering wheel to the left and remove the screw indicated in the illustration.

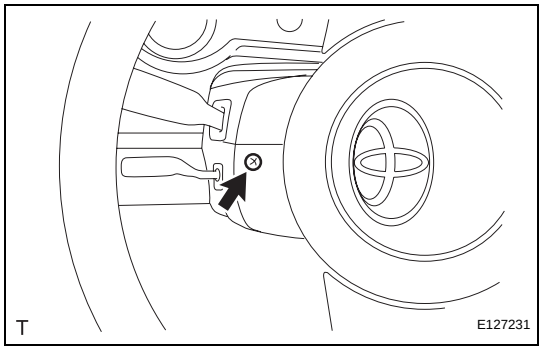

(b) Turn the steering wheel to the right and remove the screw indicated in the illustration.

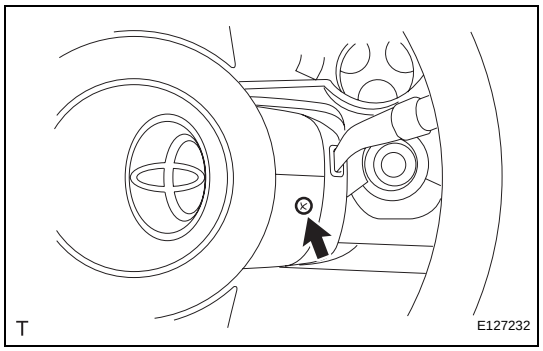

(c) Remove the screw indicated in the illustration.

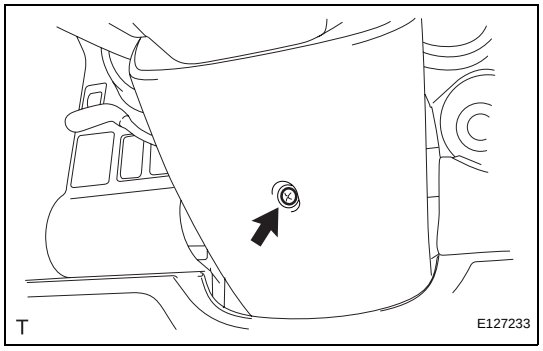

(d) Disengage the 2 claws and remove the lower steering column cover.

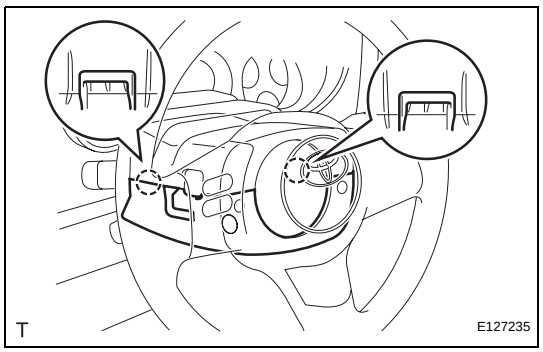

LI

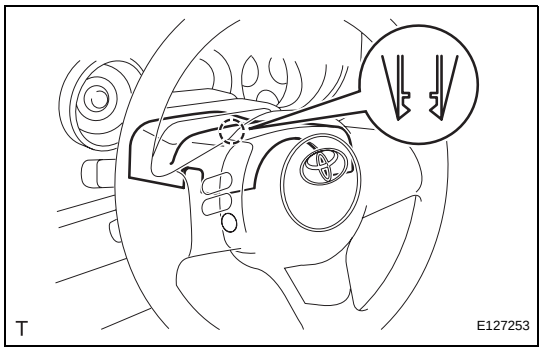

(e) Disengage the claw and remove the upper steering column cover.

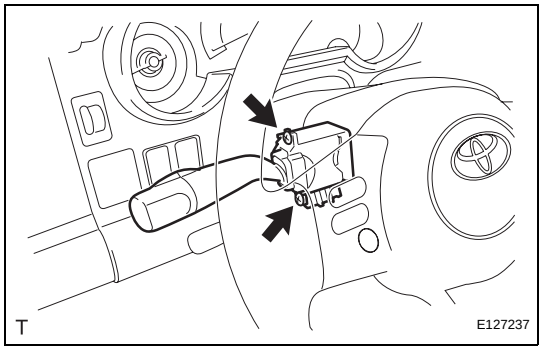

3. REMOVE HEADLIGHT DIMMER SWITCH

(a) Disconnect the connector.

(b) Remove the 2 screws and headlight dimmer switch.

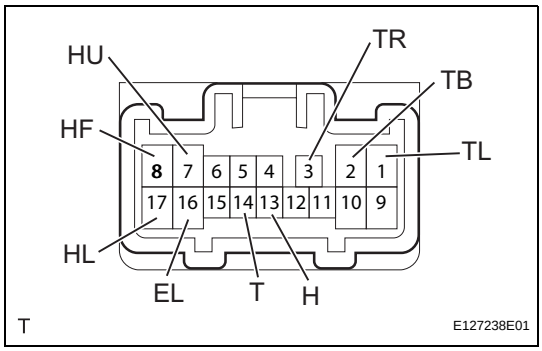

INSPECTION

1. INSPECT HEADLIGHT DIMMER SWITCH

(a) Check the resistance of the light control switch.

(1) Using an ohmmeter, measure the resistance and check the results in accordance with the value(s) in the table below.

Standard Resistance

Tester Connection	Condition	Specified Condition
14 - 16	OFF	10 kΩ or higher
13 - 16	OFF	10 kΩ or higher
14 - 16	TAIL	Below 1 Ω
14 - 16	HEAD	Below 1 Ω
13 - 16	HEAD	Below 1 Ω

If the result is not as specified, replace the headlight dimmer switch.

(b) Check the resistance of the headlight dimmer switch.

(1) Using an ohmmeter, measure the resistance and check the results in accordance with the value(s) in the table below.

Standard Resistance

Tester Connection	Condition	Specified Condition
8 - 16	FLASH	Below 1 Ω
7 - 16	FLASH	Below 1 Ω
16 - 17	LOW BEAM	Below 1 Ω
7 - 16	HI BEAM	Below 1 Ω

If the result is not as specified, replace the headlight dimmer switch.

(c) Check the resistance of the turn signal switch.
(1) Using an ohmmeter, measure the resistance and check the results in accordance with the value(s) in the table below.

Standard Resistance

Tester Connection	Condition	Specified Condition
2 - 3	Right turn	Below 1 Ω
2 - 3	Neutral	10 kΩ or higher
1 - 2	Neutral	10 kΩ or higher
1 - 2	Left turn	Below 1 Ω

If the result is not as specified, replace the headlight dimmer switch.

INSTALLATION

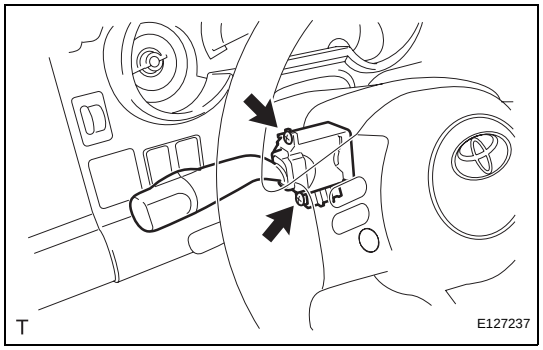

1. INSTALL HEADLIGHT DIMMER SWITCH

(a) Install the headlight dimmer switch with the 2 screws.
(b) Connect the connector.

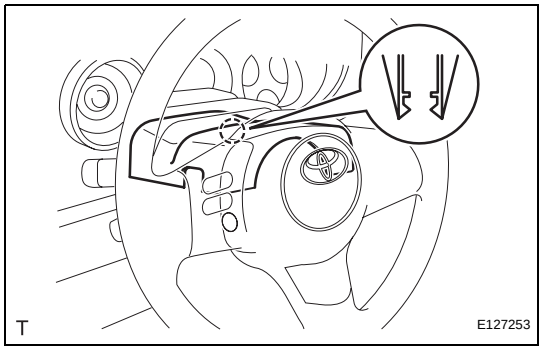

2. INSTALL STEERING COLUMN COVER

(a) Engage the claw and install the upper steering column cover.

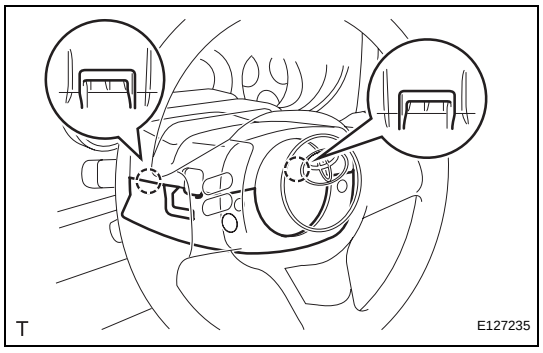

(b) Engage the 2 claws and install the lower steering column cover.

LI

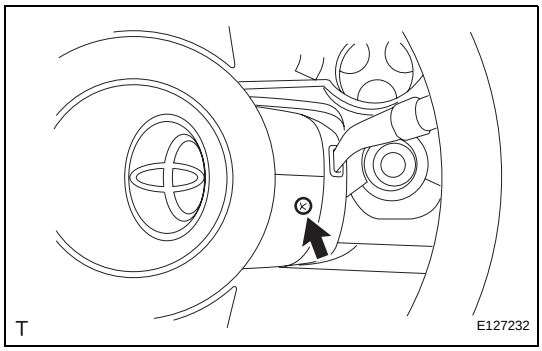

(c) Turn the steering wheel to the right and tighten the screw indicated in the illustration.

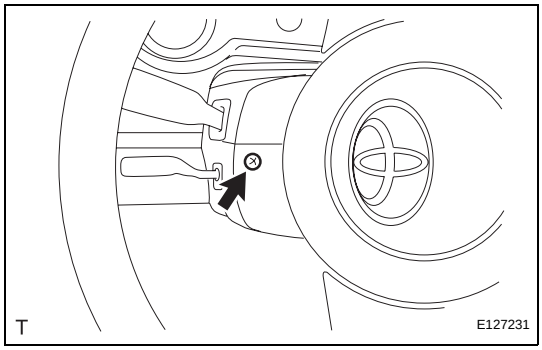

(d) Turn the steering wheel to the left and tighten the screw indicated in the illustration.

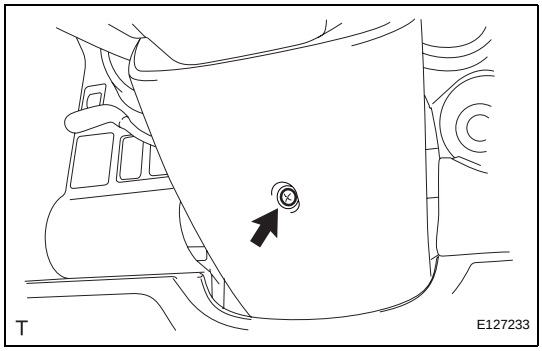

(e) Tighten the screw indicated in the illustration.

3. CONNECT CABLE TO NEGATIVE BATTERY TERMINAL
Torque: 3.9 N*m (40 kgf*cm, 35 in.*lbf)

HAZARD WARNING SWITCH

COMPONENTS

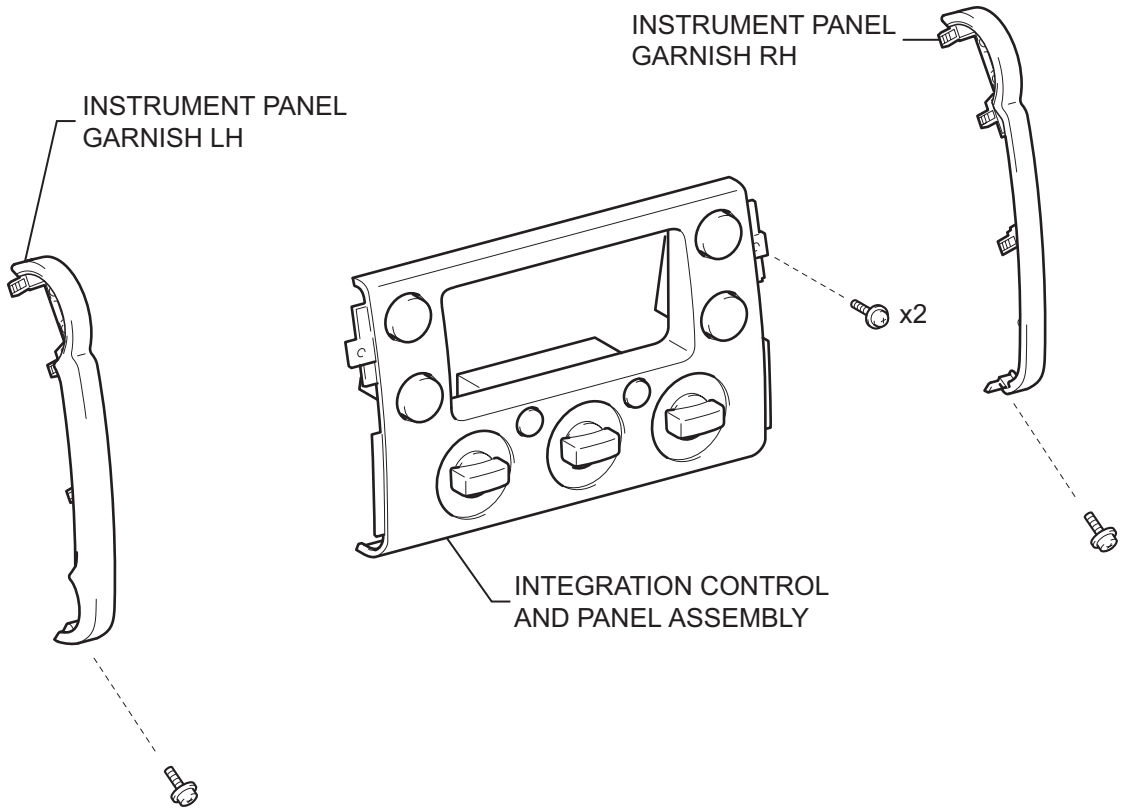

T

E127251E01

REMOVAL

1. **DISCONNECT CABLE FROM NEGATIVE BATTERY TERMINAL**
2. **REMOVE INSTRUMENT PANEL GARNISH LH (See page IP-10)**
3. **REMOVE INSTRUMENT PANEL GARNISH RH (See page IP-10)**
4. **REMOVE INTEGRATION CONTROL AND PANEL ASSEMBLY**
   (a) Remove the 2 screws.
   (b) Disengage the 4 clips and remove the integration control and panel.

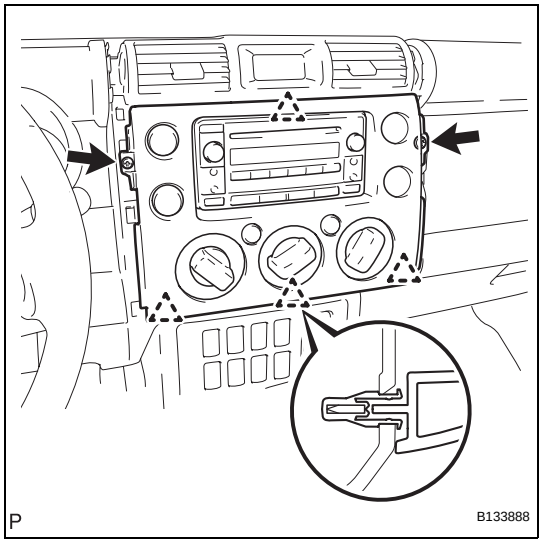

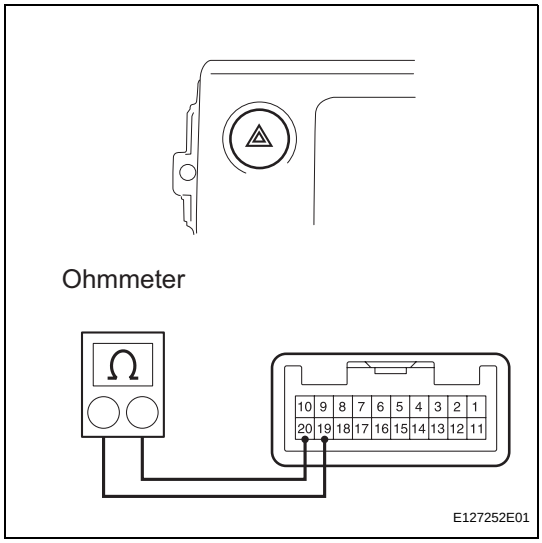

INSPECTION

1. **INSPECT INTEGRATION CONTROL AND PANEL ASSEMBLY**
   (a) Check the resistance of the hazard warning switch.
      (1) Using an ohmmeter, measure the resistance and check the results in accordance with the value(s) in the table below.
      Standard Resistance

Tester Connection	Condition	Specified Condition
19 - 20	ON	Below 3 Ω
19 - 20	OFF	10 MΩ or higher

If the result is not as specified, replace the integration control and panel.

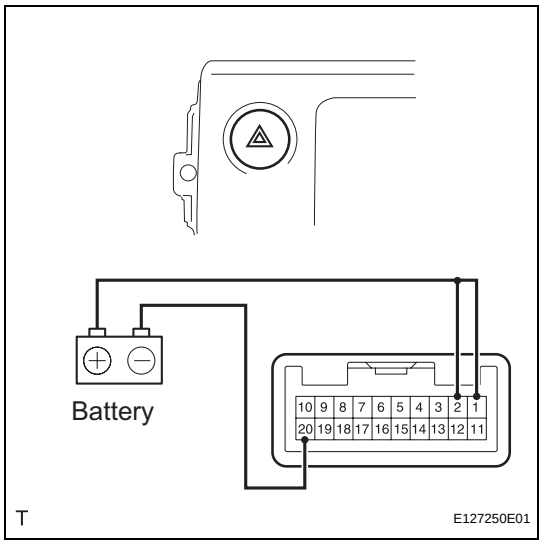

(b) Check the illumination operation.
(1) Connect the positive (+) battery lead to terminals 1 and 2, and the negative (-) battery lead to terminal 20, then check that the illumination illuminates.
Standard:
Illumination illuminates.
If the illumination does not illuminate, replace the integration control and panel.

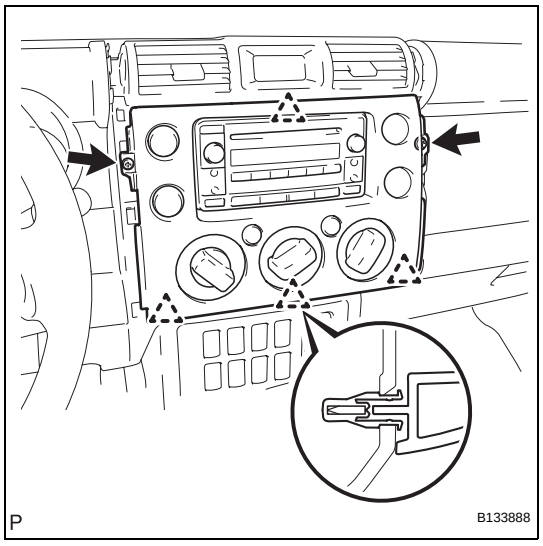

INSTALLATION

1. **INSTALL INTEGRATION CONTROL AND PANEL ASSEMBLY**
   (a) Engage the 4 clips and install the integration control and panel.
   (b) Install the 2 screws.
2. **INSTALL INSTRUMENT PANEL GARNISH LH (See page IP-33)**
3. **INSTALL INSTRUMENT PANEL GARNISH RH (See page IP-33)**
4. **CONNECT CABLE TO NEGATIVE BATTERY TERMINAL**
   Torque: 3.9 N*m (40 kgf*cm, 35 in.*lbf)

LI

STOP LIGHT SWITCH

COMPONENTS

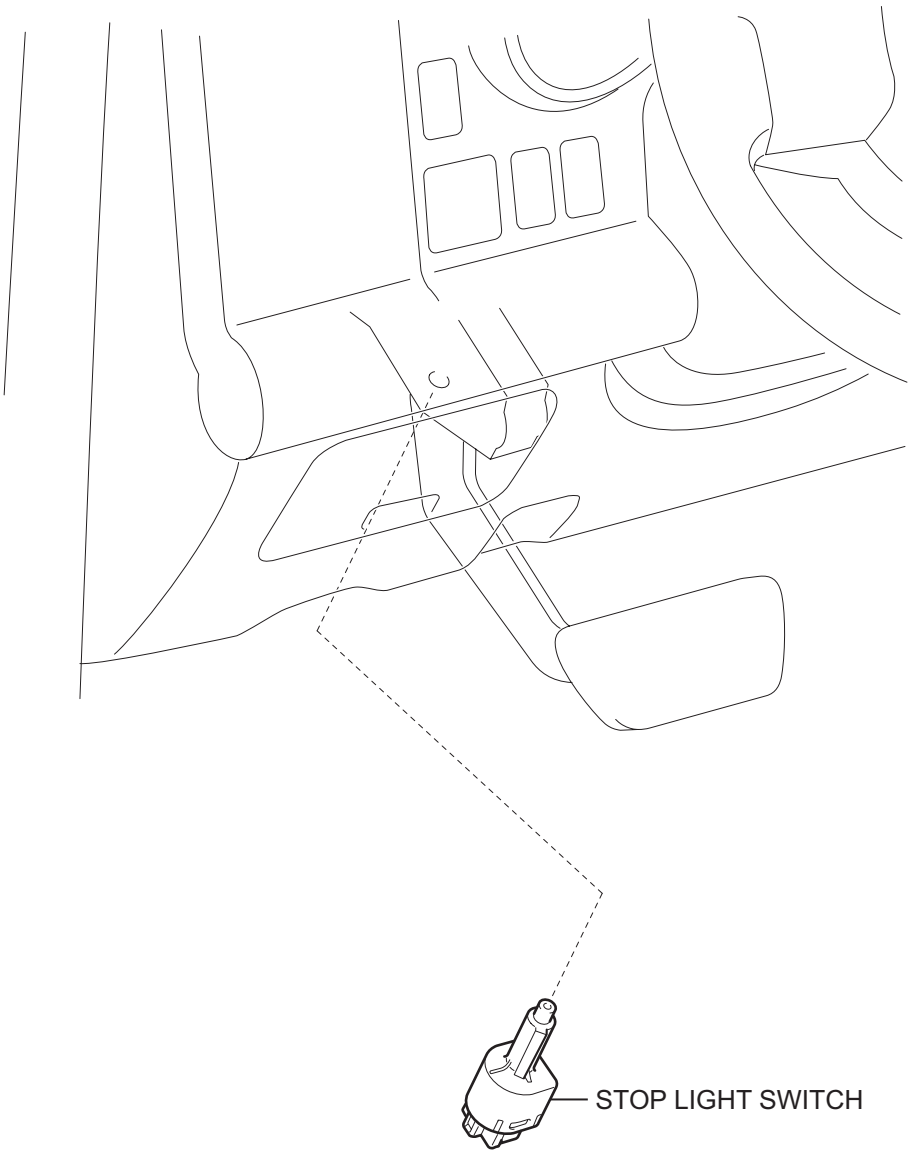

T

E127230E01

REMOVAL

1. DISCONNECT CABLE FROM NEGATIVE BATTERY TERMINAL

2. REMOVE STOP LIGHT SWITCH

(a) Remove the stop light switch connector from the stop light switch.

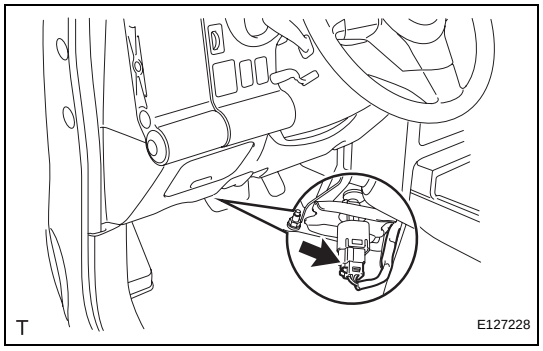

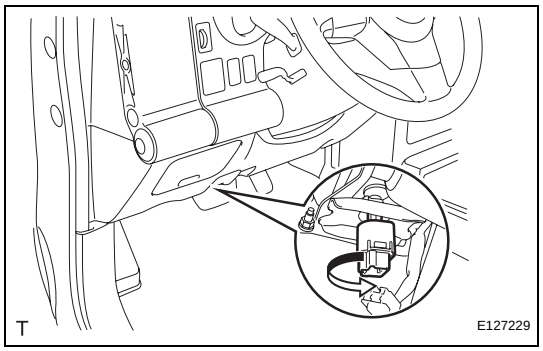

(b) Turn the stop light switch counterclockwise and remove it.

INSPECTION

1. INSPECT STOP LIGHT SWITCH

(a) Check the resistance.

(1) Using an ohmmeter, measure the resistance and check the results in accordance with the value(s) in the table below.

Standard Resistance

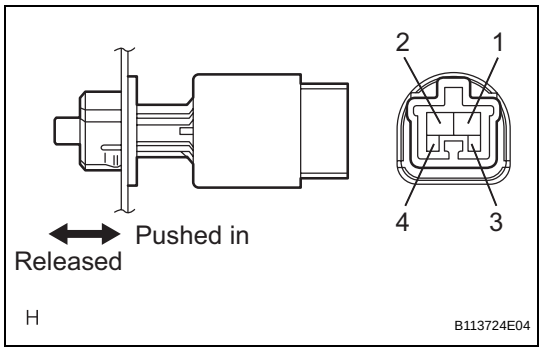

Tester Connection	Condition	Specified Condition
1 - 2	Switch pin released	Below 1 Ω
3 - 4	Switch pin released	10 kΩ or higher
1 - 2	Switch pin pushed in	10 kΩ or higher
3 - 4	Switch pin pushed in	Below 1 Ω

If the result is not as specified, replace the stop light switch.

INSTALLATION

1. INSTALL STOP LIGHT SWITCH

(a) Install the stop light switch into the adjuster until it slightly touches the brake pedal.

NOTICE:

Do not depress the brake pedal.

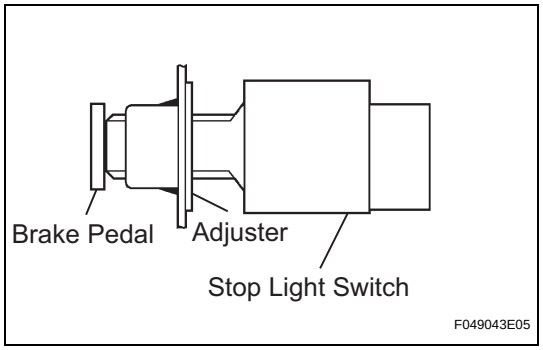

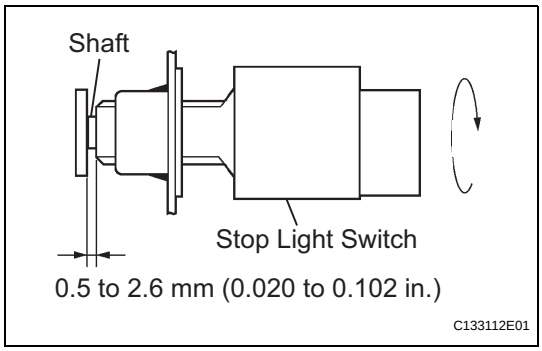

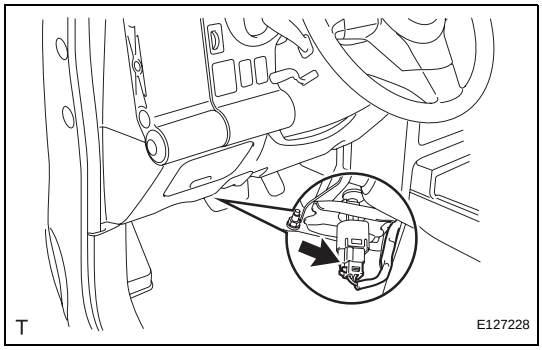

(1) Make a quarter turn clockwise to install the stop light switch.
NOTICE:
Do not depress the brake pedal.
HINT:
The turning torque for installing the stop light switch is as below.
Torque: 1.5 N*m (15 kgf*cm, 13 in.*lbf) or less

(b) Check the stop light switch clearance.
Stop light switch clearance:
0.5 to 2.6 mm (0.020 to 0.102 in.)

(c) Connect the stop light switch connector to the stop light switch.

2. CONNECT CABLE TO NEGATIVE BATTERY TERMINAL
Torque: 3.9 N*m (40 kgf*cm, 35 in.*lbf)

FRONT DOOR COURTESY SWITCH

COMPONENTS

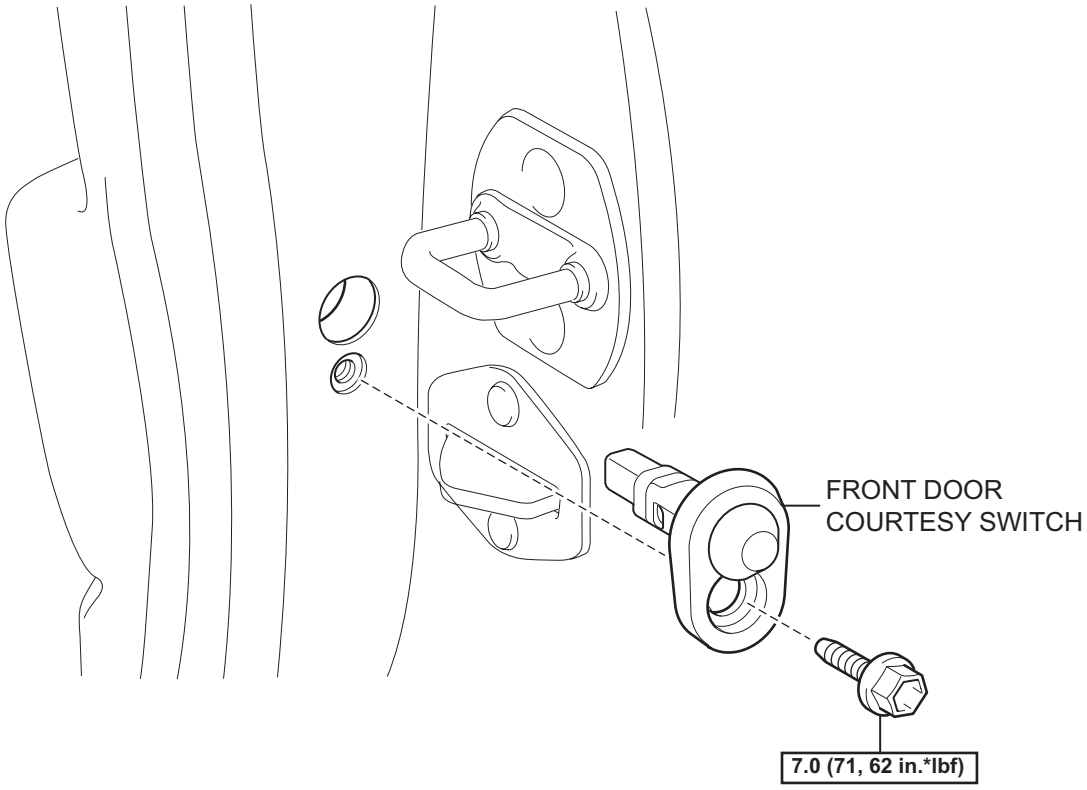

N*m (kgf*cm, ft*lbf) : Specified torque

T

E127227E01

REMOVAL

HINT:

- Use the same procedure for both the RH and LH sides.
- The procedure described below is for the LH side.

1. DISCONNECT CABLE FROM NEGATIVE BATTERY TERMINAL

2. REMOVE FRONT DOOR COURTESY SWITCH

(a) Remove the bolt and front door courtesy switch.

(b) Disconnect the connector.

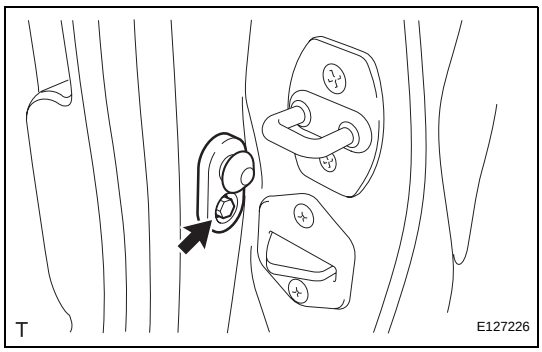

INSPECTION

1. INSPECT FRONT DOOR COURTESY SWITCH

(a) Check the resistance.

(1) Using an ohmmeter, measure the resistance and check the results in accordance with the value(s) in the table below.

Standard Resistance

Tester Connection	Condition	Specified Condition
1 - Switch body	ON (Shaft not pressed)	Below 1 Ω
1 - Switch body	OFF (Shaft pressed)	10 kΩ or higher

If the result is not as specified, replace the front door courtesy switch.

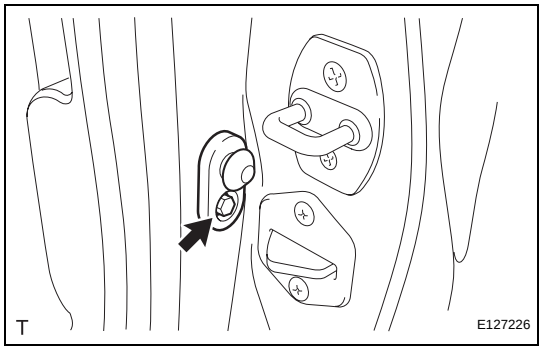

INSTALLATION

1. INSTALL FRONT DOOR COURTESY SWITCH

(a) Connect the connector.

(b) Install the front door courtesy switch with the bolt.
Torque: 7.0 N*m (71 kgf*cm, 62 in.*lbf)

2. CONNECT CABLE TO NEGATIVE BATTERY TERMINAL
Torque: 3.9 N*m (40 kgf*cm, 35 in.*lbf)

REAR DOOR COURTESY SWITCH (for Upper Side)

COMPONENTS

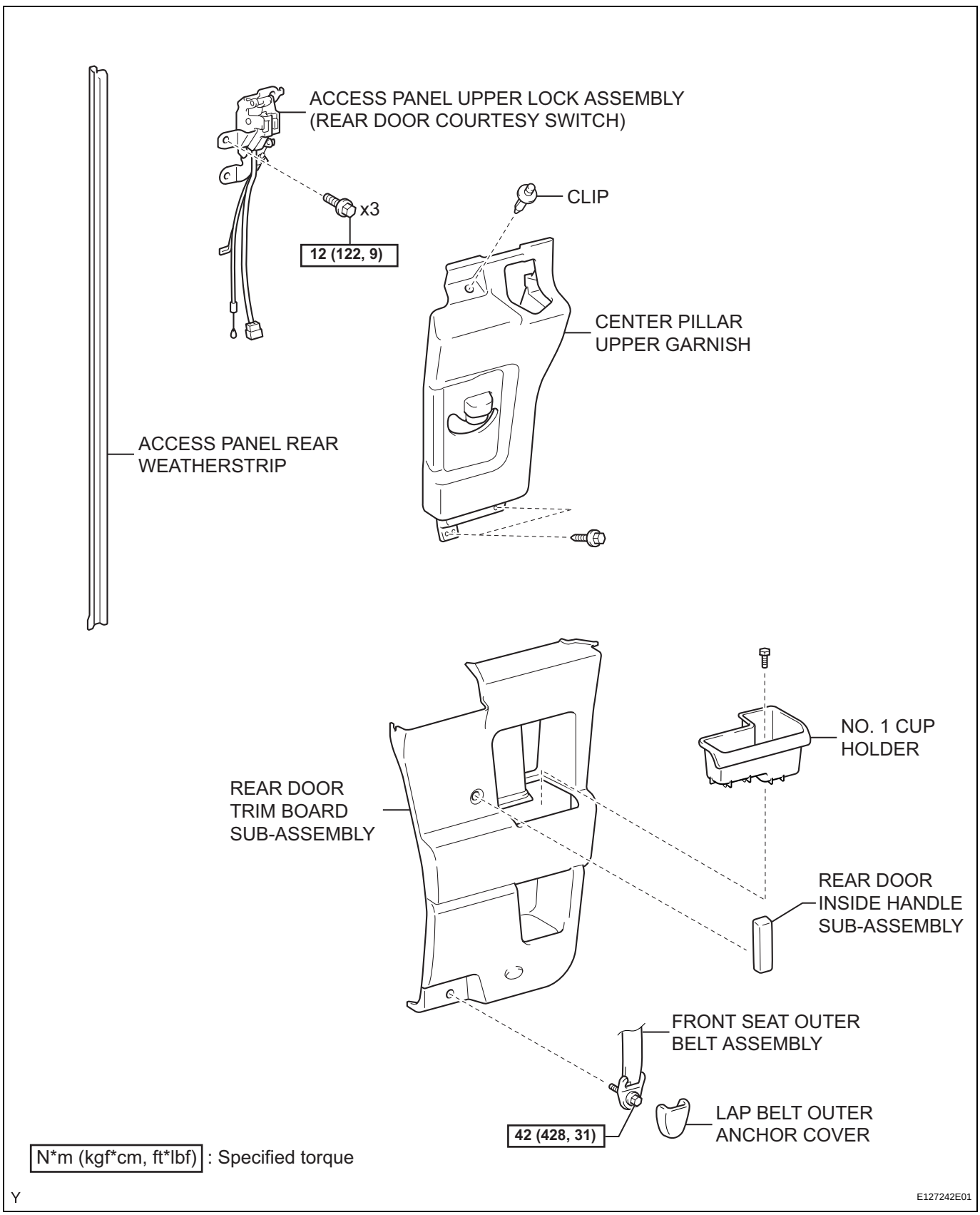

LI

REMOVAL

HINT:

- Use the same procedure for both the RH and LH sides.
- The procedure described below is for the LH side.

1. **DISCONNECT CABLE FROM NEGATIVE BATTERY TERMINAL**
2. **REMOVE ACCESS PANEL REAR WEATHERSTRIP (See page ED-29)**
3. **REMOVE LAP BELT OUTER ANCHOR COVER (See page ED-29)**
4. **REMOVE REAR DOOR INSIDE HANDLE SUB-ASSEMBLY (See page ED-29)**
5. **REMOVE NO. 1 CUP HOLDER (See page ED-29)**
6. **REMOVE REAR DOOR TRIM BOARD SUB-ASSEMBLY (See page ED-30)**
7. **REMOVE CENTER PILLAR UPPER GARNISH (See page ED-30)**
8. **REMOVE ACCESS PANEL UPPER LOCK ASSEMBLY**
   (a) Disconnect the connector, harness clamp and the access panel lock control cable.

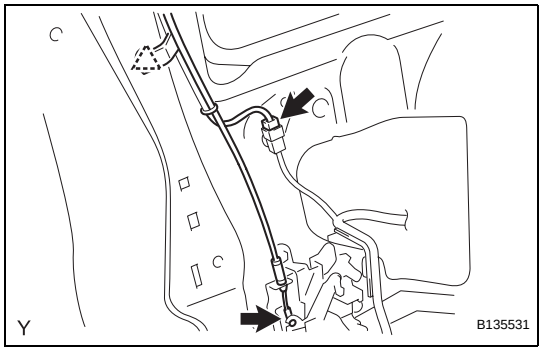

   (b) Remove the 3 bolts, then remove the access panel upper lock.

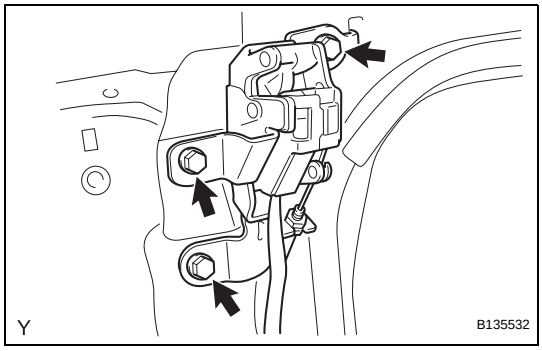

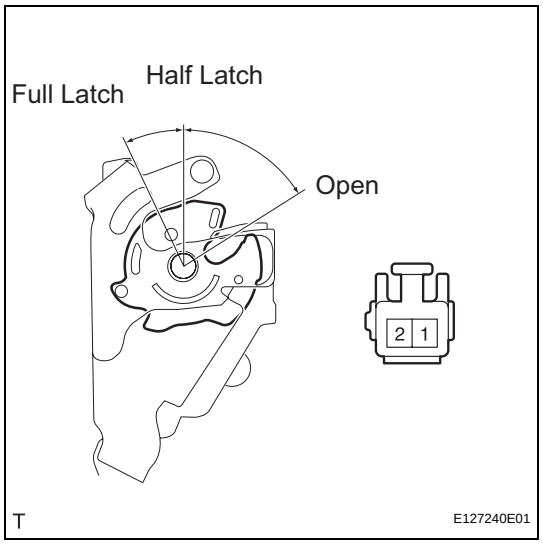

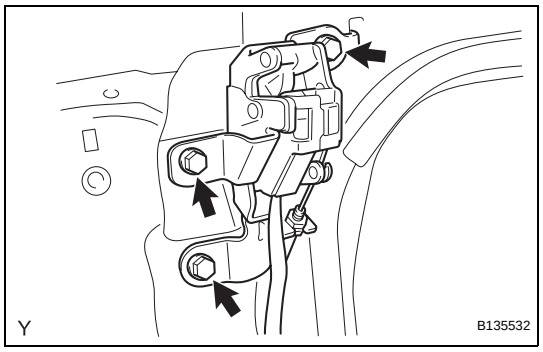

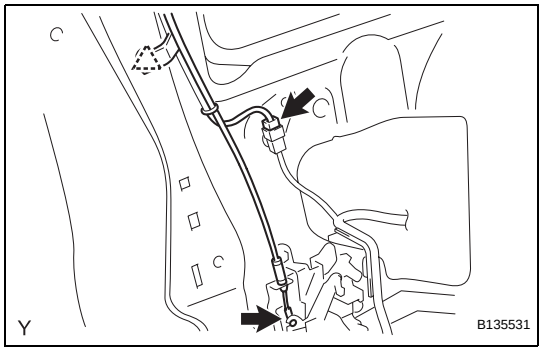

INSPECTION

1. INSPECT ACCESS PANEL UPPER LOCK ASSEMBLY

(a) Check the resistance of the rear door courtesy switch.

(1) Using an ohmmeter, measure the resistance between the terminals when the latch is operated with a screwdriver.

Standard Resistance

Tester Connection	Condition	Specified Condition
1 - 2	Open	Below 1 Ω
1 - 2	Half Latch	Below 1 Ω
1 - 2	Full Latch	10 kΩ or higher

If the result is not as specified, replace the access panel upper lock.

INSTALLATION

1. INSTALL ACCESS PANEL UPPER LOCK ASSEMBLY

(a) Install the access panel upper lock with the 3 bolts.

Torque: 12 N*m (122 kgf*cm, 9 ft.*lbf)

(b) Connect the connector, harness clamp and access panel lock control cable.

2. INSTALL CENTER PILLAR UPPER GARNISH (See page ED-40)

3. INSTALL REAR DOOR TRIM BOARD SUB-ASSEMBLY (See page ED-41)

4. INSTALL NO. 1 CUP HOLDER (See page ED-41)

5. INSTALL REAR DOOR INSIDE HANDLE SUB-ASSEMBLY (See page ED-41)

6. INSTALL LAP BELT OUTER ANCHOR COVER (See page ED-42)

7. INSTALL ACCESS PANEL REAR WEATHERSTRIP (See page ED-42)

8. CONNECT CABLE TO NEGATIVE BATTERY TERMINAL

Torque: 3.9 N*m (40 kgf*cm, 35 in.*lbf)

REAR DOOR COURTESY SWITCH (for Lower Side)

COMPONENTS

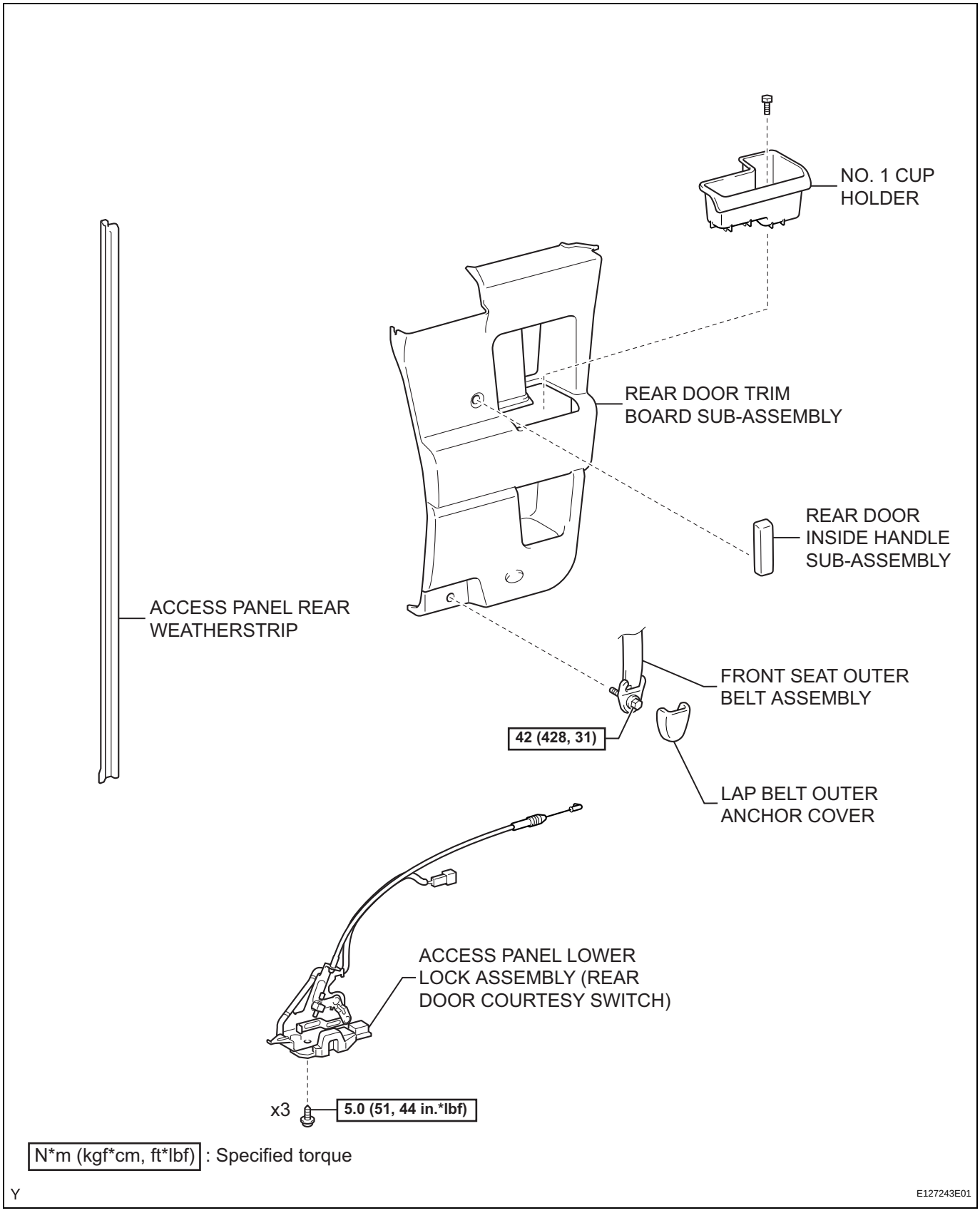

REMOVAL

HINT:

- Use the same procedure for both the RH and LH sides.
- The procedure described below is for the RH side.

1. **DISCONNECT CABLE FROM NEGATIVE BATTERY TERMINAL**
2. **REMOVE ACCESS PANEL REAR WEATHERSTRIP (See page ED-29)**
3. **REMOVE LAP BELT OUTER ANCHOR COVER (See page ED-29)**
4. **REMOVE REAR DOOR INSIDE HANDLE SUB-ASSEMBLY (See page ED-29)**
5. **REMOVE NO. 1 CUP HOLDER (See page ED-29)**
6. **REMOVE REAR DOOR TRIM BOARD SUB-ASSEMBLY (See page ED-30)**
7. **REMOVE ACCESS PANEL LOWER LOCK ASSEMBLY**
   (a) Disconnect the connector, connector clamp and access panel lock control cable.

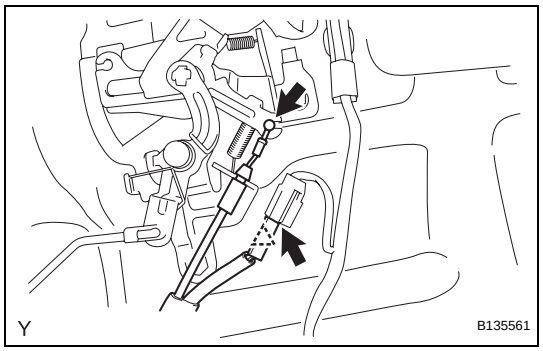

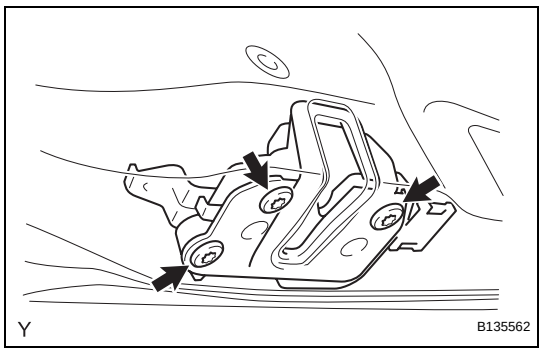

   (b) Using "Torx" socket wrench T30, remove the 3 screws.
   (c) Remove the access panel lower lock by sliding it upward.

LI

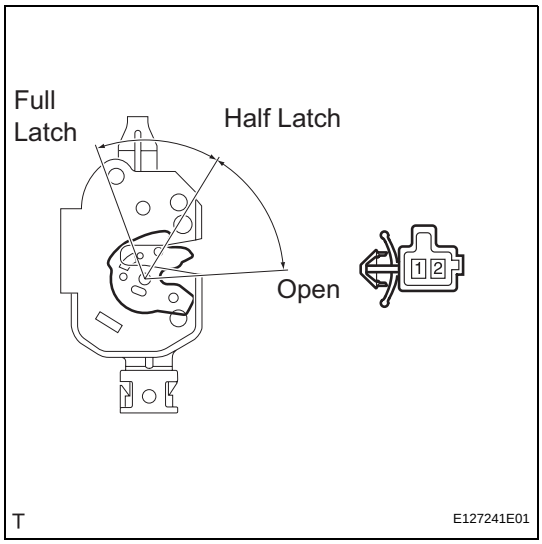

INSPECTION

1. INSPECT ACCESS PANEL LOWER LOCK ASSEMBLY

(a) Check the resistance of the rear door courtesy switch.

(1) Using an ohmmeter, measure the resistance between the terminals when the latch is operated with a screwdriver.

Standard Resistance

Tester Connection	Condition	Specified Condition
1 - 2	Open	Below 1 Ω
1 - 2	Half Latch	Below 1 Ω
1 - 2	Full Latch	10 kΩ or higher

If the result is not as specified, replace the access panel lower lock.

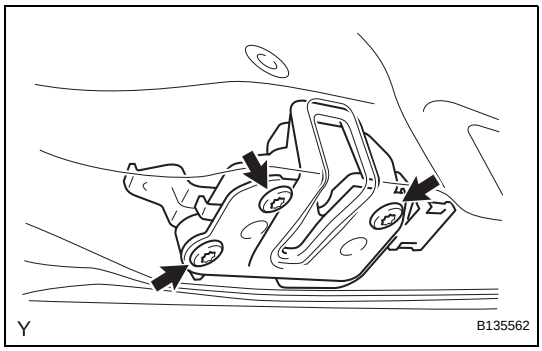

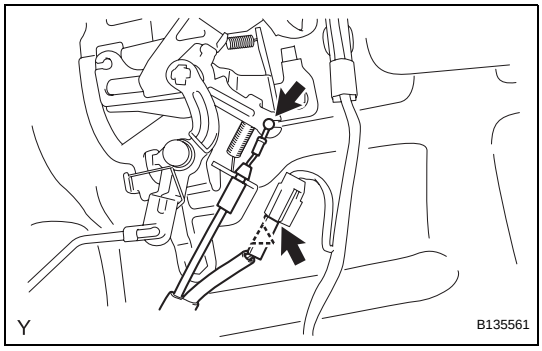

INSTALLATION

1. INSTALL ACCESS PANEL LOWER LOCK ASSEMBLY

(a) Install the access panel lower lock onto the rear door.

Torque: 5.0 N*m (51 kgf*cm, 44 in.*lbf)

(b) Connect the connector, connector clamp and access panel lock control cable.

2. INSTALL REAR DOOR TRIM BOARD SUB-ASSEMBLY (See page ED-41)

3. INSTALL NO. 1 CUP HOLDER (See page ED-41)

4. INSTALL REAR DOOR INSIDE HANDLE SUB-ASSEMBLY (See page ED-41)

5. INSTALL LAP BELT OUTER ANCHOR COVER (See page ED-42)

6. INSTALL ACCESS PANEL REAR WEATHERSTRIP (See page ED-42)

7. CONNECT CABLE TO NEGATIVE BATTERY TERMINAL

Torque: 3.9 N*m (40 kgf*cm, 35 in.*lbf)

BACK DOOR COURTESY SWITCH

COMPONENTS

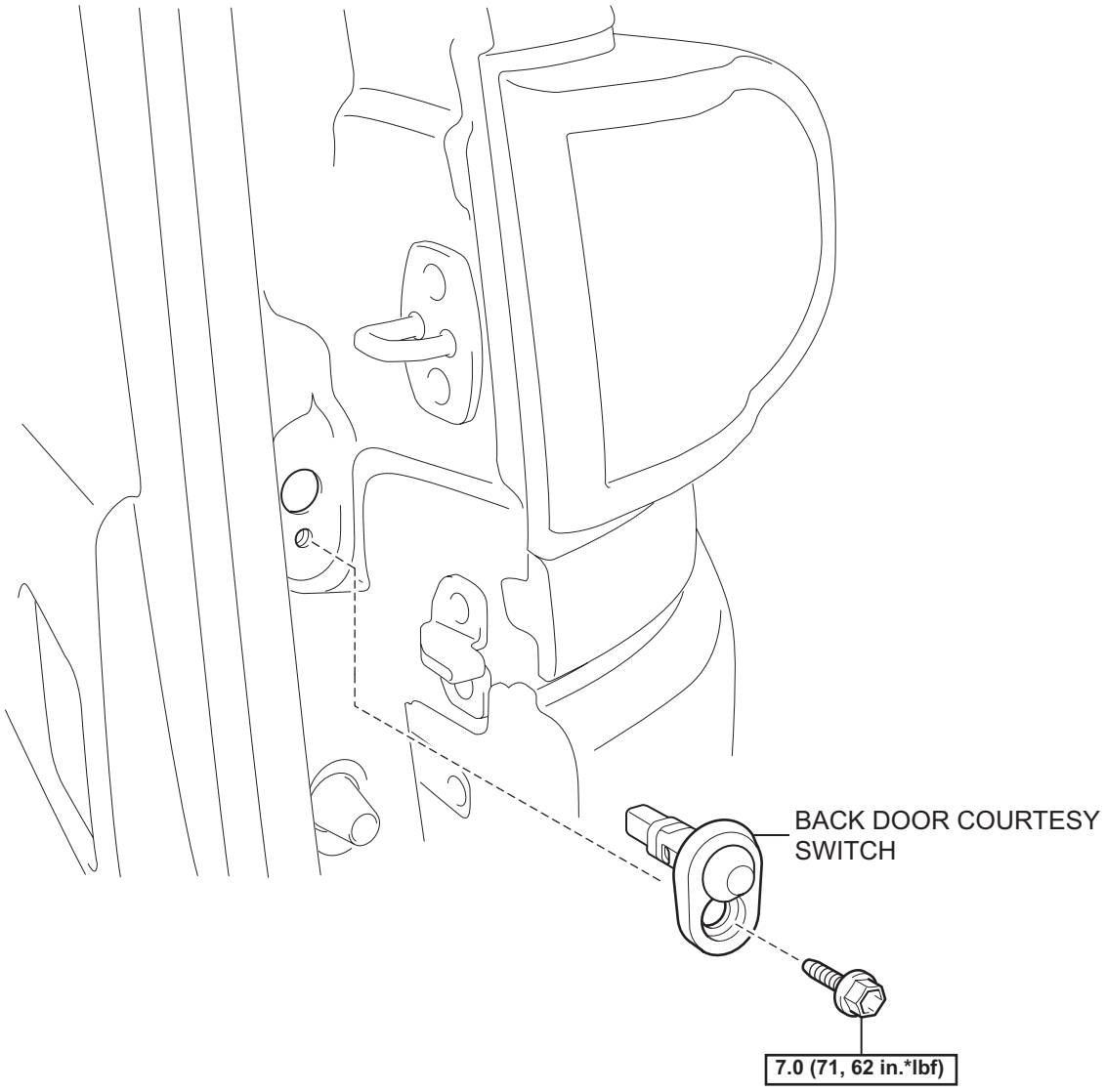

N*m (kgf*cm, ft*lbf) : Specified torque

T

E127225E01

REMOVAL

1. DISCONNECT CABLE FROM NEGATIVE BATTERY TERMINAL

2. REMOVE BACK DOOR COURTESY SWITCH

(a) Remove the bolt and back door courtesy switch.

(b) Disconnect the connector.

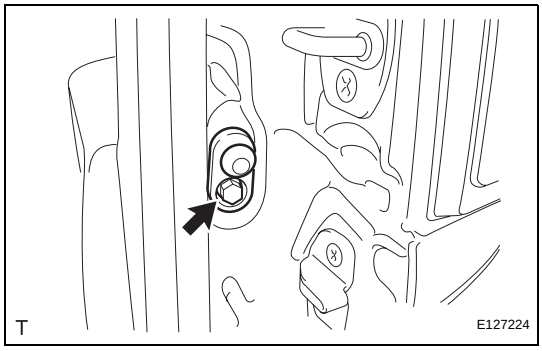

INSPECTION

1. INSPECT BACK DOOR COURTESY SWITCH

(a) Check the resistance.

(1) Using an ohmmeter, measure the resistance and check the results in accordance with the value(s) in the table below.

Standard Resistance

Tester Connection	Condition	Specified Condition
1 - Switch body	ON (Shaft not pressed)	Below 1 Ω
1 - Switch body	OFF (Shaft not pressed)	10 kΩ or higher

If the result is not as specified, replace the back door courtesy switch.

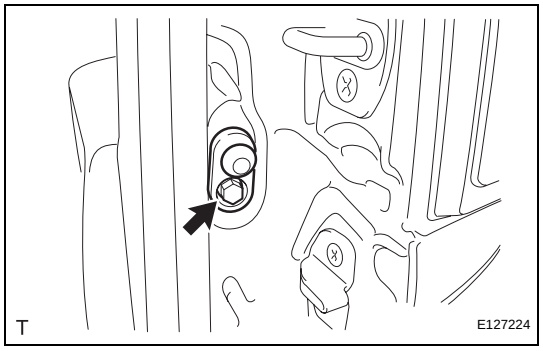

INSTALLATION

1. INSTALL BACK DOOR COURTESY SWITCH

(a) Connect the connector.

(b) Install the back door courtesy switch with the bolt.
Torque: 7.0 N*m (71 kgf*cm, 62 in.*lbf)

2. CONNECT CABLE TO NEGATIVE BATTERY TERMINAL
Torque: 3.9 N*m (40 kgf*cm, 35 in.*lbf)

Connector Front Side:

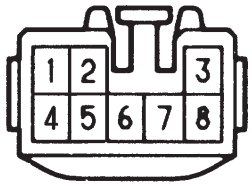

E068703E05

TURN SIGNAL FLASHER ASSEMBLY

ON-VEHICLE INSPECTION

1. INSPECT TURN SIGNAL FLASHER CIRCUIT

(a) Check the power source circuit and ground circuit.

(1) Disconnect the turn signal flasher connector.

(2) Measure the voltage and check the results in accordance with the value(s) in the table below.

Standard Voltage

Tester Connection	Condition	Specified Condition
1 - Body ground	Ignition switch off	0 V
1 - Body ground	Ignition switch ON	11 to 14 V
4 - Body ground	Always	11 to 14 V

If the result is not as specified, there may be a malfunction on the wire harness side.

(3) Measure the resistance and check the result in accordance with the value(s) in the table below.

Standard Resistance

Tester Connection	Condition	Specified Condition
7 - Body ground	Always	Below 1 Ω

If the result is not as specified, there may be a malfunction on the wire harness side.

(b) Check the output operation signal.

(1) Reconnect the turn signal flasher connector.

(2) Measure the voltage and check the results in accordance with the value(s) in the table below.

Connector Back Side:

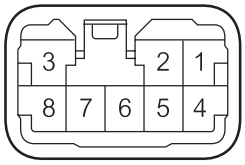

H

E101506E01

Standard Voltage

Tester Connection	Condition	Specified Condition
2 - Body ground	Hazard warning switch OFF	Below 1 V
2 - Body ground	Hazard warning switch ON	11 to 14 V (60 to 120 times per minute)
2 - Body ground	Ignition switch ON and turn signal switch (right turn) OFF	Below 1 V
2 - Body ground	Ignition switch ON and turn signal switch (right turn) ON	11 to 14 V (60 to 120 times per minute)
3 - Body ground	Hazard warning switch OFF	Below 1 V
3 - Body ground	Hazard warning switch ON	11 to 14 V (60 to 120 times per minute)
3 - Body ground	Ignition switch ON and turn signal switch (left turn) OFF	Below 1 V
3 - Body ground	Ignition switch ON and turn signal switch (left turn) ON	11 to 14 V (60 to 120 times per minute)
5 - Body ground	Ignition switch ON and turn signal switch (left turn) OFF	11 to 14 V

Tester Connection	Condition	Specified Condition
5 - Body ground	Ignition switch ON and turn signal switch (left turn) ON	Below 1 V
6 - Body ground	Ignition switch ON and turn signal switch (right turn) OFF	11 to 14 V
6 - Body ground	Ignition switch ON and turn signal switch (right turn) ON	Below 1 V
8 - Body ground	Hazard warning switch OFF	11 to 14 V
8 - Body ground	Hazard warning switch ON	Below 1 V

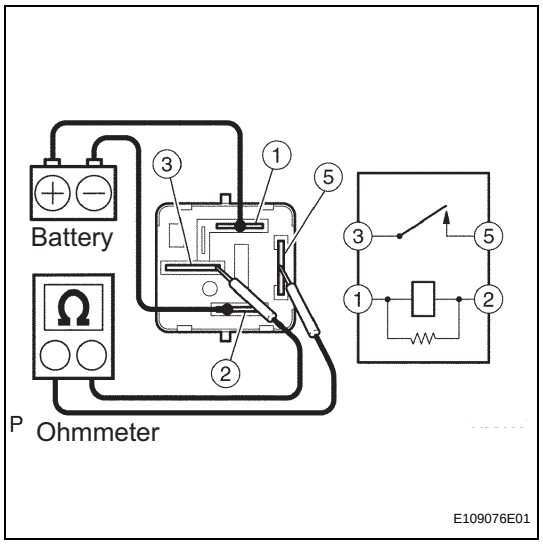

HEADLIGHT RELAY

ON-VEHICLE INSPECTION

1. INSPECT HEADLIGHT RELAY

(a) Check the resistance.

(b) Using an ohmmeter, measure the resistance between the terminals.

Standard Resistance

Tester Connection	Specified Condition
3 - 5	10 kΩ or higher
3 - 5	Below 1 Ω (Battery voltage applied to terminals 1 and 2)

If the result is not as specified, replace the headlight relay.

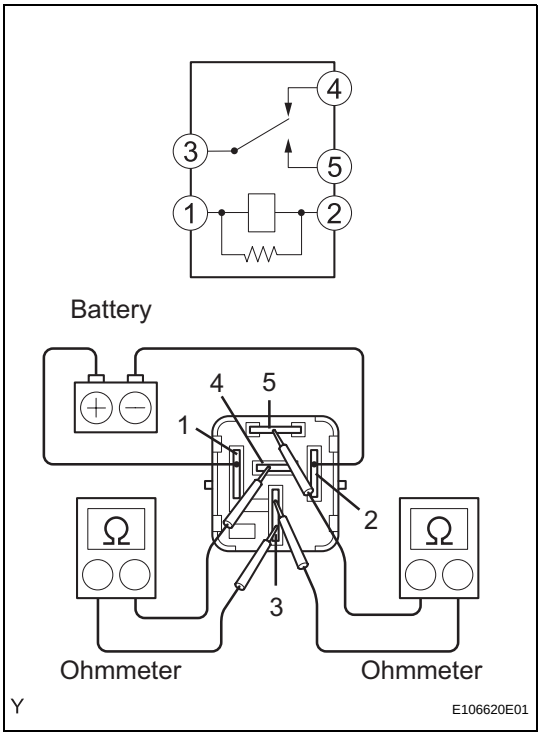

HEADLIGHT DIMMER RELAY

ON-VEHICLE INSPECTION

1. INSPECT HEADLIGHT DIMMER RELAY

(a) Check the resistance.

(1) Using an ohmmeter, measure the resistance between the terminals.

Standard Resistance

Tester Connection	Specified Condition
3 - 4	Below 1 Ω
3 - 4	10 kΩ or higher (Battery voltage applied to terminals 1 and 2)
3 - 5	10 kΩ or higher
3 - 5	Below 1 Ω (Battery voltage applied to terminals 1 and 2)

If the result is not as specified, replace the headlight dimmer relay.

TAILLIGHT RELAY

COMPONENTS

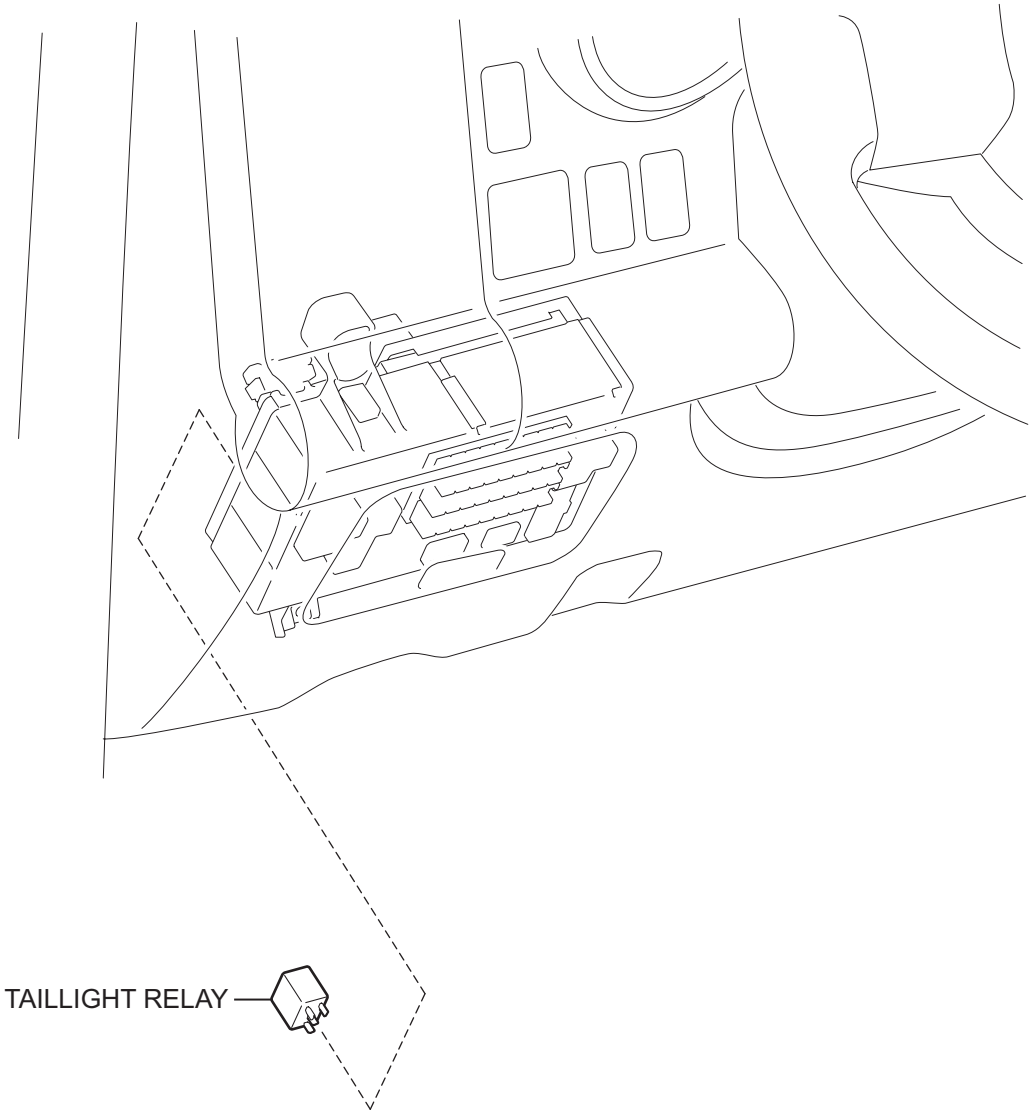

T

E127246E01

REMOVAL

1. DISCONNECT CABLE FROM NEGATIVE BATTERY TERMINAL

2. REMOVE TAILLIGHT RELAY

(a) Remove the taillight relay from the main body ECU.

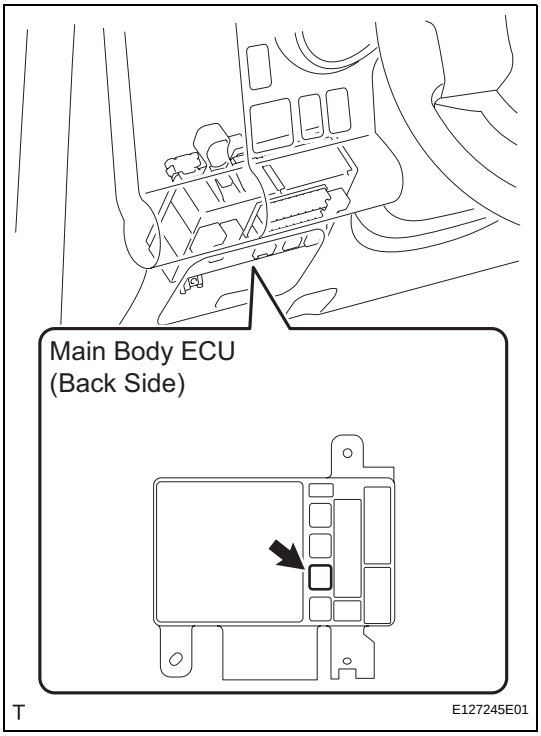

INSPECTION

1. INSPECT TAILLIGHT RELAY

(a) Check the resistance.

(1) Using an ohmmeter, measure the resistance between the terminals.

Standard Resistance

Tester Connection	Specified Condition
3 - 5	10 kΩ or higher
3 - 5	Below 1 Ω (Battery voltage applied to terminals 1 and 2)

If result is not as specified, replace the taillight relay.

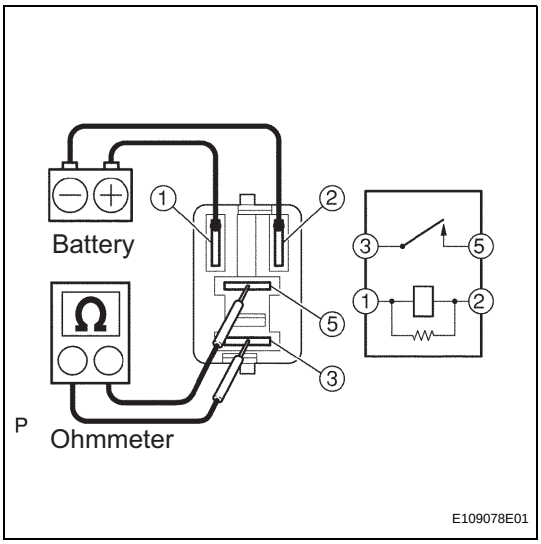

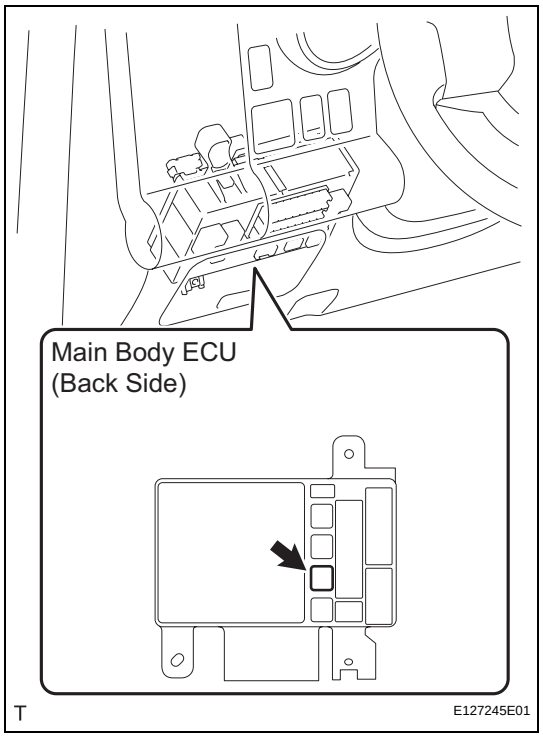

INSTALLATION

1. **INSTALL TAILLIGHT RELAY**
   (a) Install the taillight relay onto the main body ECU.
2. **CONNECT CABLE TO NEGATIVE BATTERY TERMINAL**
   Torque: 3.9 N*m (40 kgf*cm, 35 in.*lbf)

LUBRICATION SYSTEM

PARTS LOCATION

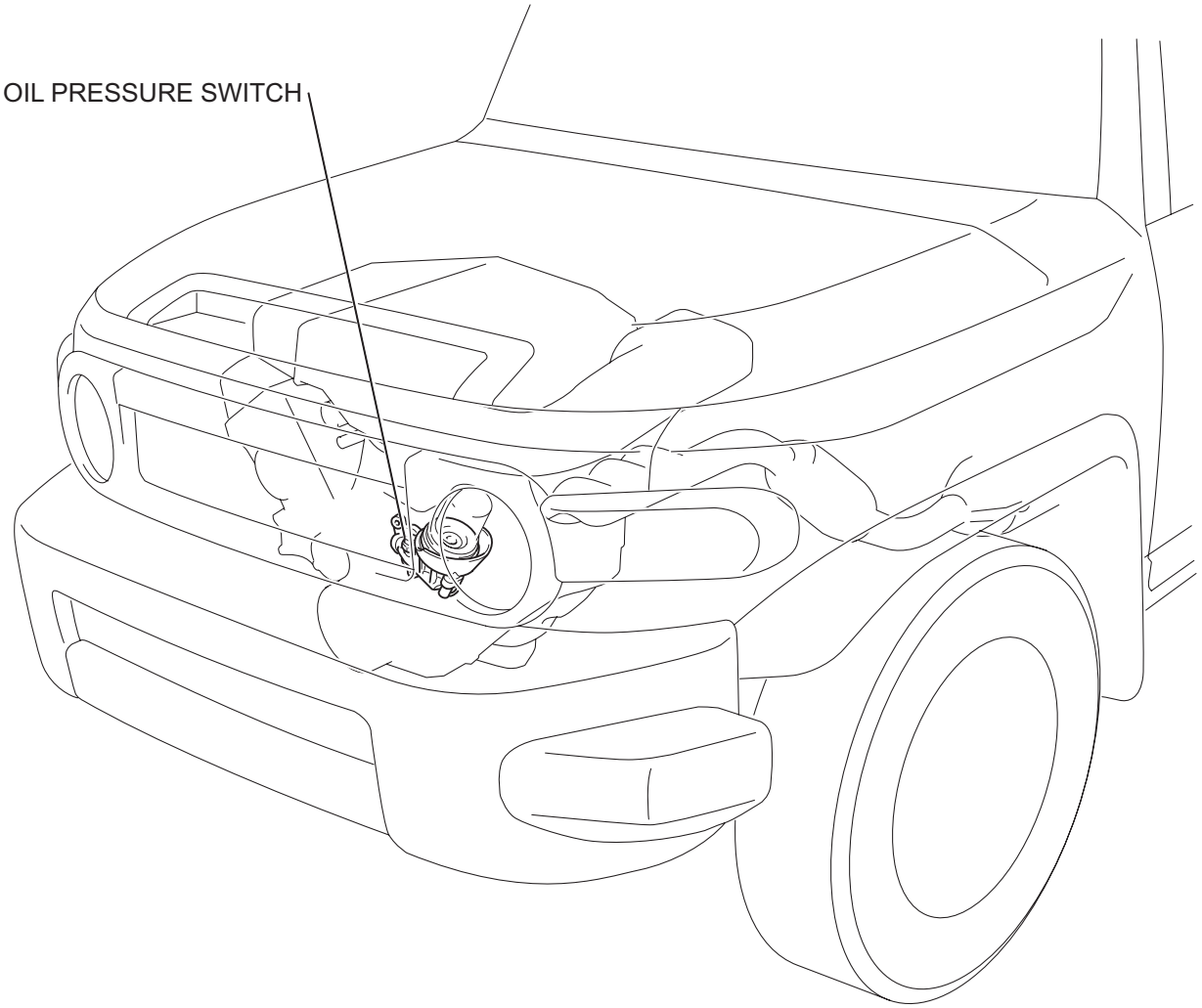

Y

A126472E01

ON-VEHICLE INSPECTION

1. CHECK ENGINE OIL LEVEL

(a) Warm up the engine, then stop the engine and wait for 5 minutes.

(b) Check that the engine oil level is between the low level and full level marks on the level gauge.
If low, check for leakage and top oil up to the full level mark.
NOTICE:
Do not fill with engine oil to above the full level mark.

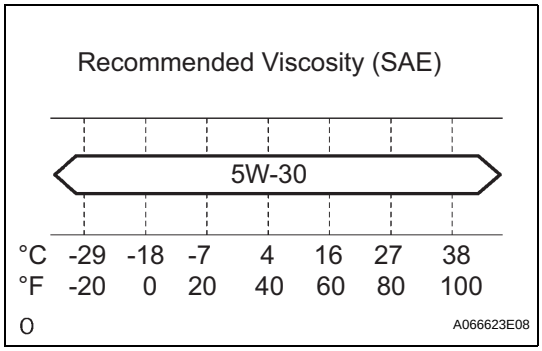

2. CHECK ENGINE OIL QUALITY

(a) Check the oil for deterioration, water intrusion, discoloration or thinning.
If the quality is visibly poor, replace the oil.
Oil grade:
Use ILSAC multigrade engine oil.
SAE 5W-30 is the best choice for good fuel economy and good starting in cold weather.
If SAE 5W-30 is not available, use SAE 10W-30.
However, it should be replaced with SAE 5W-30 at the next oil replacement.

LU

3. INSPECT OIL PRESSURE

(a) Disconnect the oil pressure switch connector.

(b) Using a 24 mm deep socket wrench, remove the oil pressure switch.

(c) Install the oil pressure gauge.

(d) Warm up the engine.

(e) Inspect the oil pressure.
Oil pressure

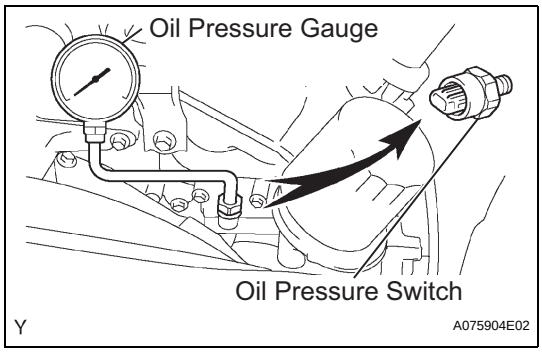

Engine condition	Specification
When Idling	29 kPa (0.3 kgf*cm^2, 4.3 psi) or more
At 3,000 rpm	294 to 588 kPa (3.0 to 6.0kgf*cm^2, 43 to 85 psi)

(f) Apply adhesive to 2 or 3 threads of the oil pressure switch.
Adhesive:
Toyota Genuine Adhesive 1344, Three Bond 1344 or the equivalent

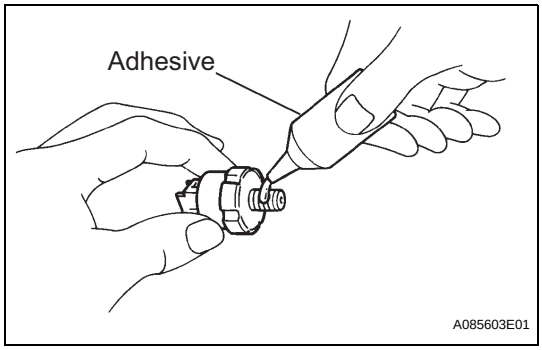

(g) Using a 24 mm deep socket wrench, install the oil pressure switch.
Torque: 15 N*m (153 kgf*cm, 11 ft.*lbf)
NOTICE:
Do not start the engine within 1 hour of the installation.

(h) Connect the oil pressure switch connector.

(i) Check for engine oil leakage.

OIL FILTER

COMPONENTS

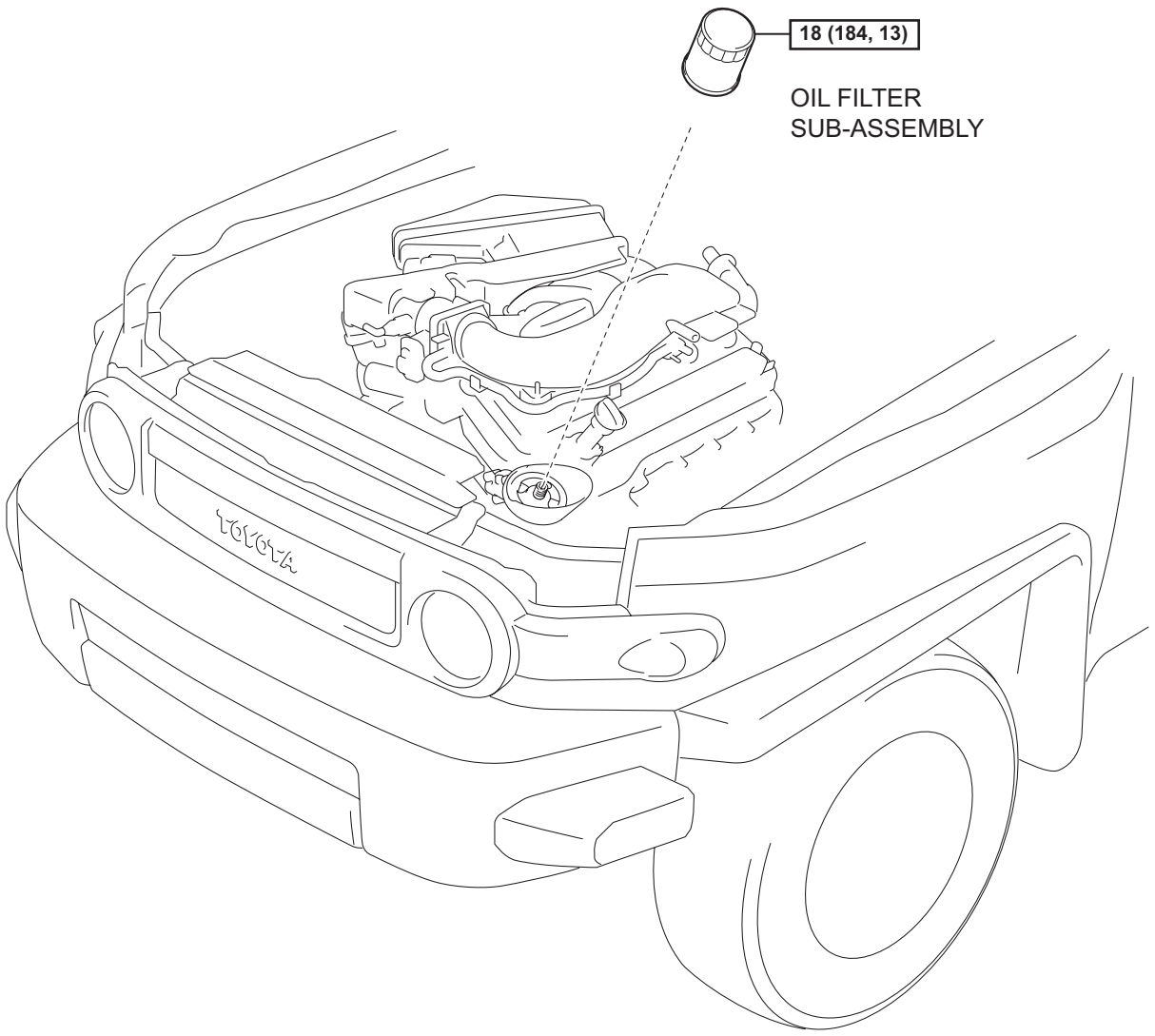

N*m (kgf*cm, ft*lbf) : Specified torque

Y

A126416E01

REPLACEMENT

CAUTION:

- **Prolonged and repeated contact with engine oil will cause the removal of natural oils from the skin, leading to dryness, irritation and dermatitis. In addition, used engine oil contains potentially harmful contaminants which may cause skin cancer.**
- **Precautions should be taken when replacing engine oil to minimize the risk of your skin making contact with used engine oil.**
- **Wash your skin thoroughly with soap and water, or use waterless hand cleaner to remove any used engine oil. Do not use gasoline, thinners, or solvents.**
- **For environmental protection, used oil and used oil filters must be disposed of only at designated disposal sites.**

1. DRAIN ENGINE OIL

(a) Remove engine under cover seal No. 3.

(b) Remove the oil pan drain plug and drain the engine oil.

(c) Clean the oil pan drain plug and install it with a new gasket.
Torque: 40 N*m (408 kgf*cm, 30 ft.*lbf)

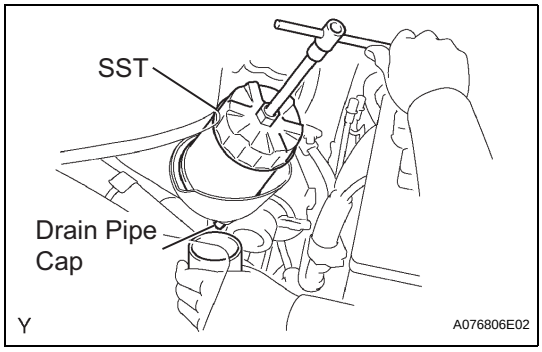

2. REMOVE OIL FILTER SUB-ASSEMBLY

(a) Remove the drain pipe cap.

(b) While removing the oil filter with SST, catch the oil from the oil filter with a container.
SST 09228-07501

(c) Install the drain pipe cap.

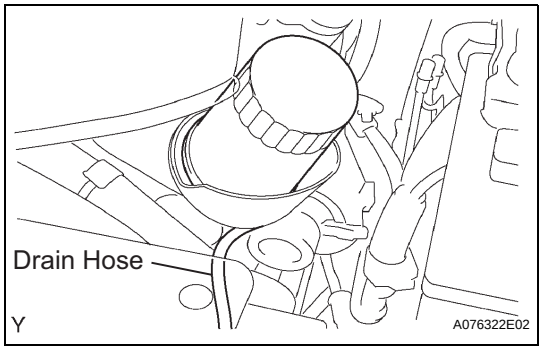

(d) Clean the oil catch plate.
HINT:
When using a drain hose, perform the following procedures.

(e) Remove the drain pipe cap.

(f) Connect a drain hose to the oil filter bracket.
HINT:
- Drain hose inside diameter: 8 mm (0.31 in.)
- Drain hose length: 900 mm (35.43 in.)

(g) Feed the drain hose down through the engine under cover, and put the drain oil container beneath the drain hose to catch the oil from the oil filter.

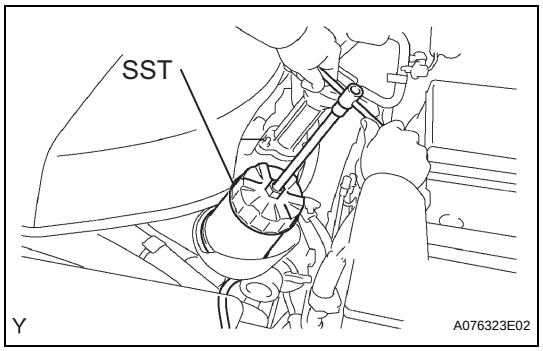

(h) Using SST, remove the oil filter.
SST 09228-07501

(i) Remove the drain hose and install the drain pipe cap.

(j) Clean the oil catch plate.

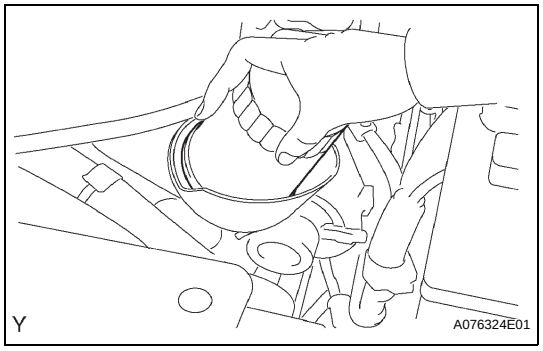

3. INSTALL OIL FILTER SUB-ASSEMBLY

(a) Clean the surface of the oil filter bracket which comes into contact with the oil filter.

(b) Apply clean engine oil to the rubber gasket of a new oil filter.

(c) Tighten the oil filter by hand until the rubber gasket comes into contact with the seat of the filter bracket.

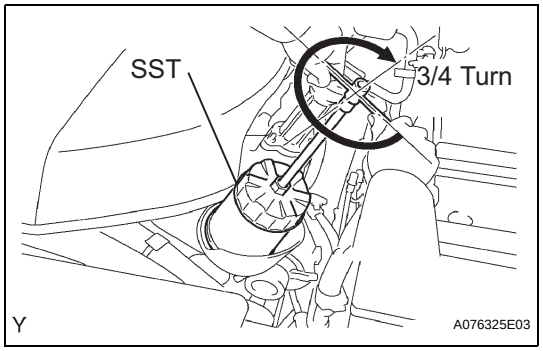

(d) Using SST, tighten it an additional 3/4 turn to set the filter.
SST 09228-07501
Torque: 18 N*m (184 kgf*cm, 13 ft.*lbf)

4. ADD ENGINE OIL

(a) Fill with fresh engine oil.
Oil Capacity

Item	Specification
With oil filter change	5.2 liters (5.5 US qts, 4.6 Imp. qts)
Without oil filter change	4.9 liters (5.2 US qts, 4.3 Imp. qts)
Dry fill	6.0 liters (6.3 US qts, 5.3 Imp. qts)

(b) Reinstall the oil filler cap.

5. CHECK FOR ENGINE OIL LEAKAGE

6. INSPECT ENGINE OIL LEVEL

LU

OIL PUMP

COMPONENTS

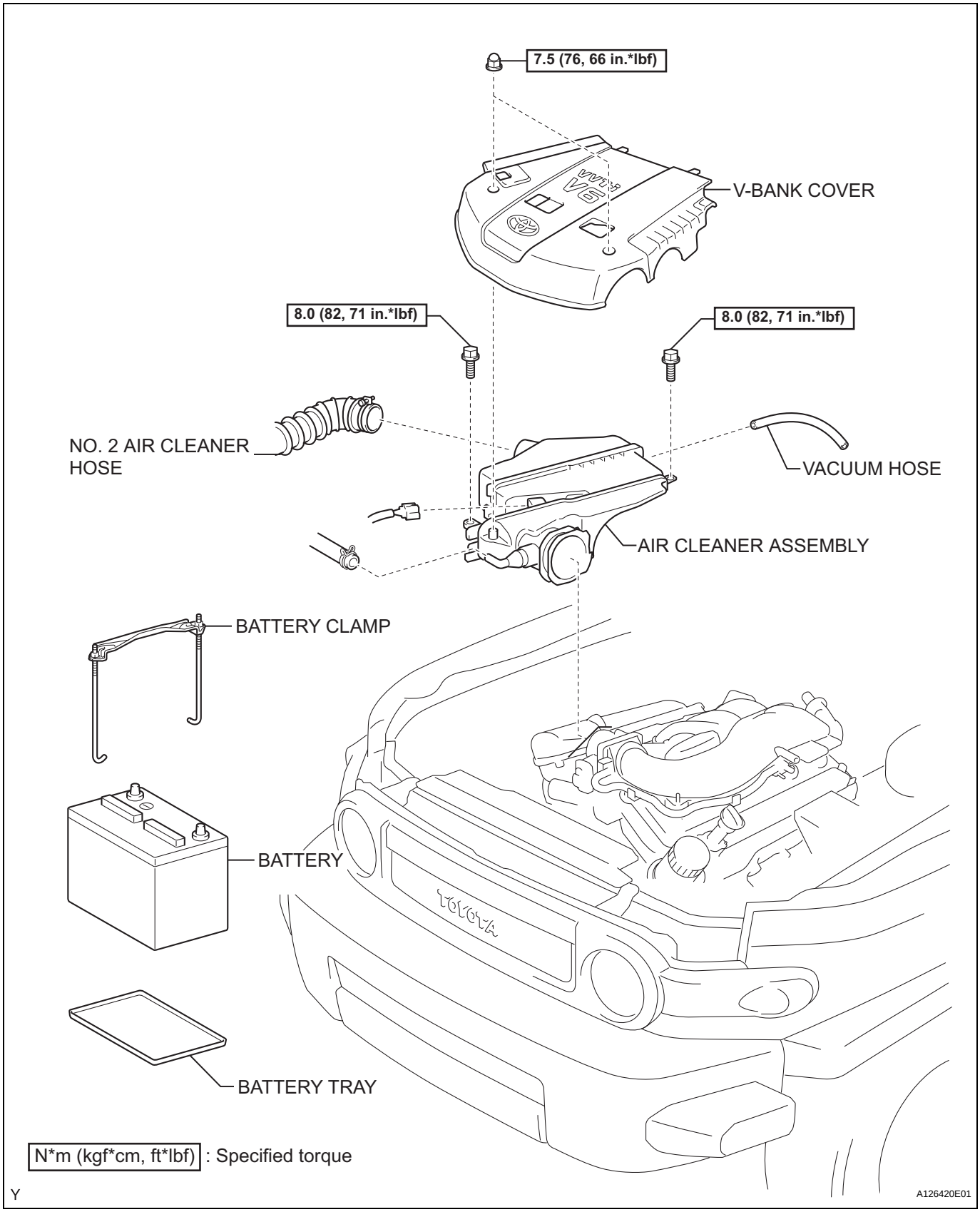

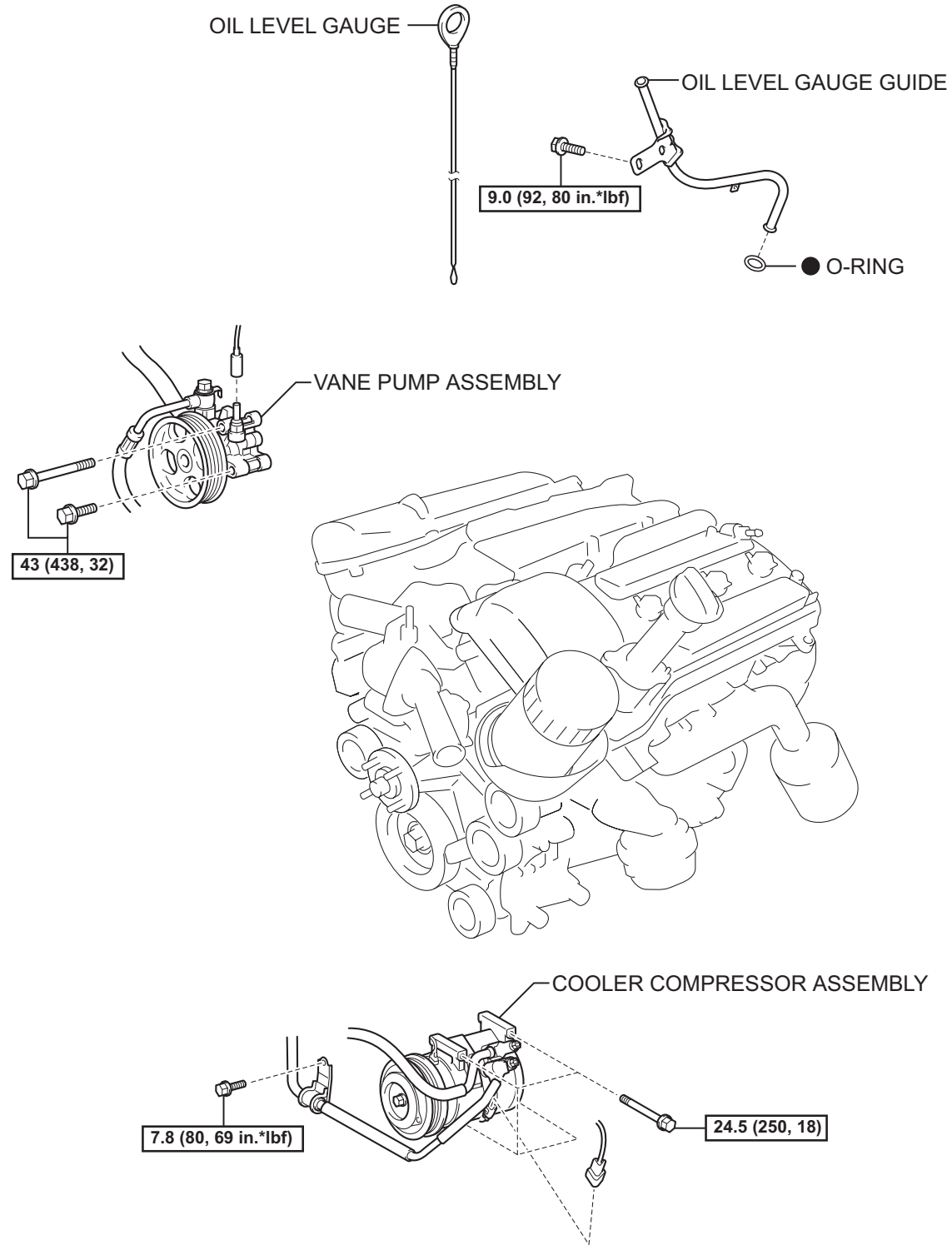

N*m (kgf*cm, ft*lbf) : Specified torque

● Non-reusable part

Y

A126421E01

LU

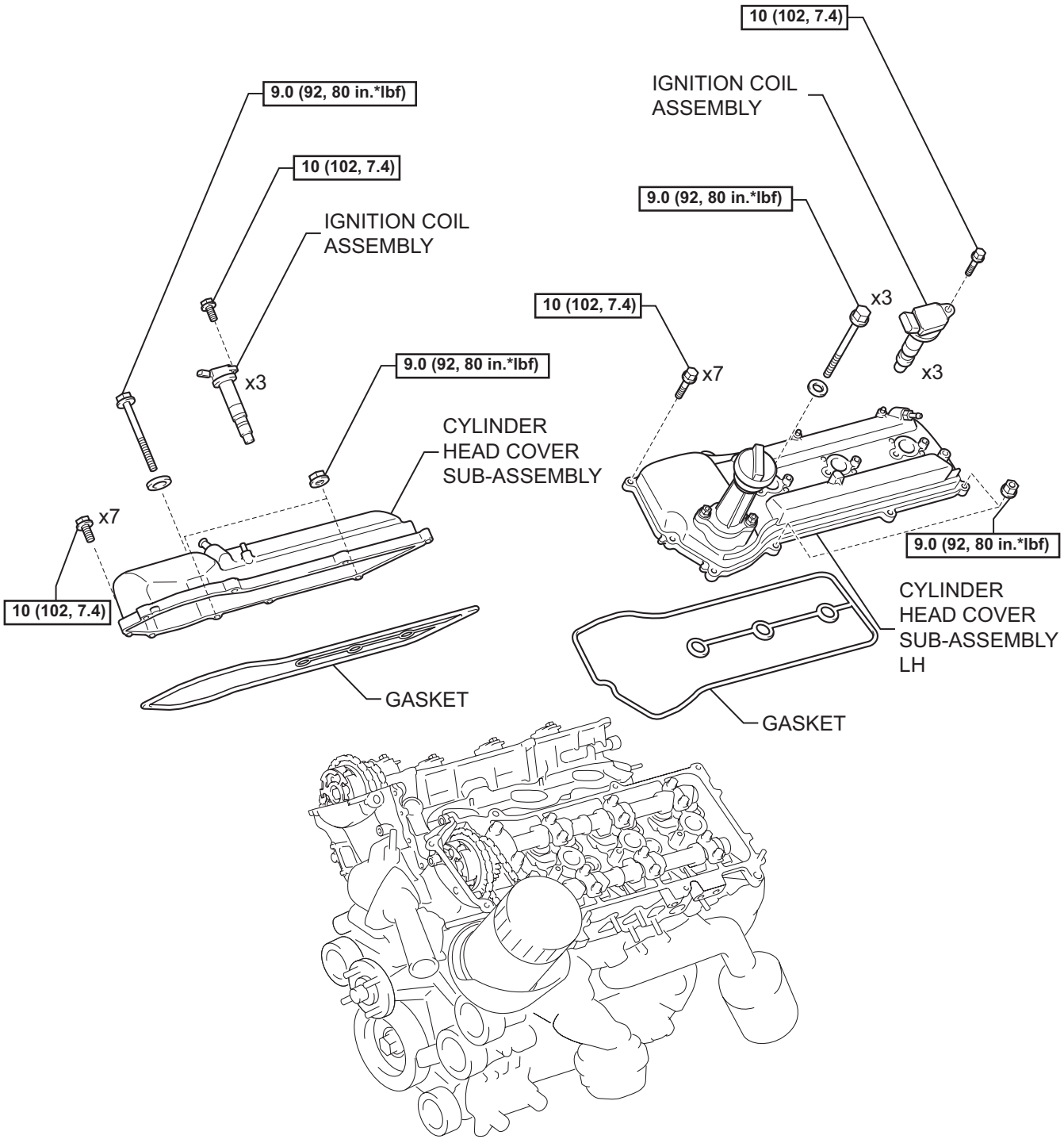

LU

N*m (kgf*cm, ft*lbf) : Specified torque

Y

A126423E01

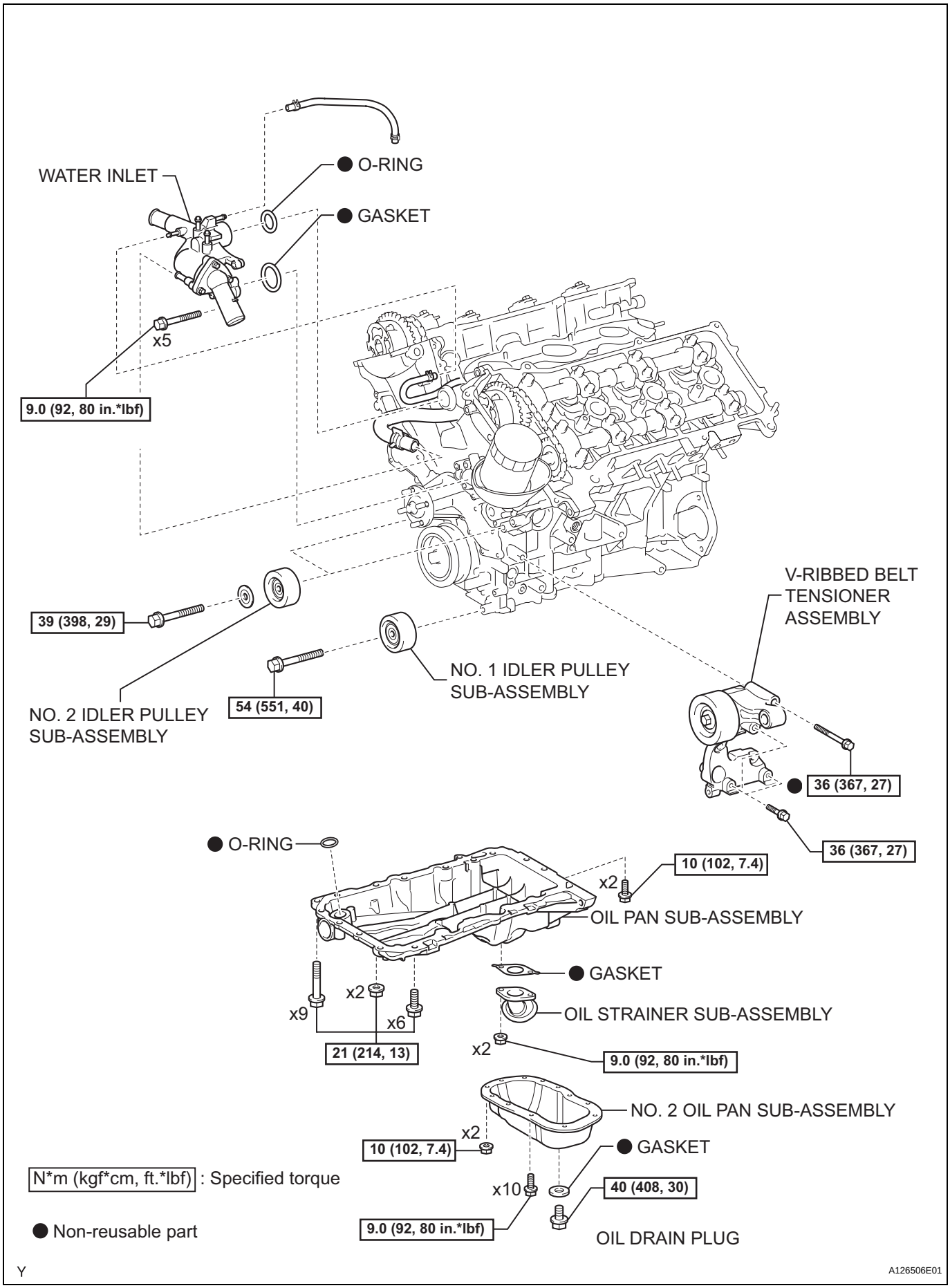
WATER INLET
O-RING
GASKET
x5
9.0 (92, 80 in.*lbf)
39 (398, 29)
NO. 2 IDLER PULLEY SUB-ASSEMBLY
54 (551, 40)
NO. 1 IDLER PULLEY SUB-ASSEMBLY
V-RIBBED BELT TENSIONER ASSEMBLY
36 (367, 27)
36 (367, 27)
O-RING
10 (102, 7.4)
x2
OIL PAN SUB-ASSEMBLY
GASKET
x9
x2
x6
21 (214, 13)
OIL STRAINER SUB-ASSEMBLY
x2
9.0 (92, 80 in.*lbf)
NO. 2 OIL PAN SUB-ASSEMBLY
x2
10 (102, 7.4)
GASKET
x10
40 (408, 30)
9.0 (92, 80 in.*lbf)
OIL DRAIN PLUG
N*m (kgf*cm, ft.*lbf) : Specified torque
Non-reusable part
Y
A126506E01

LU

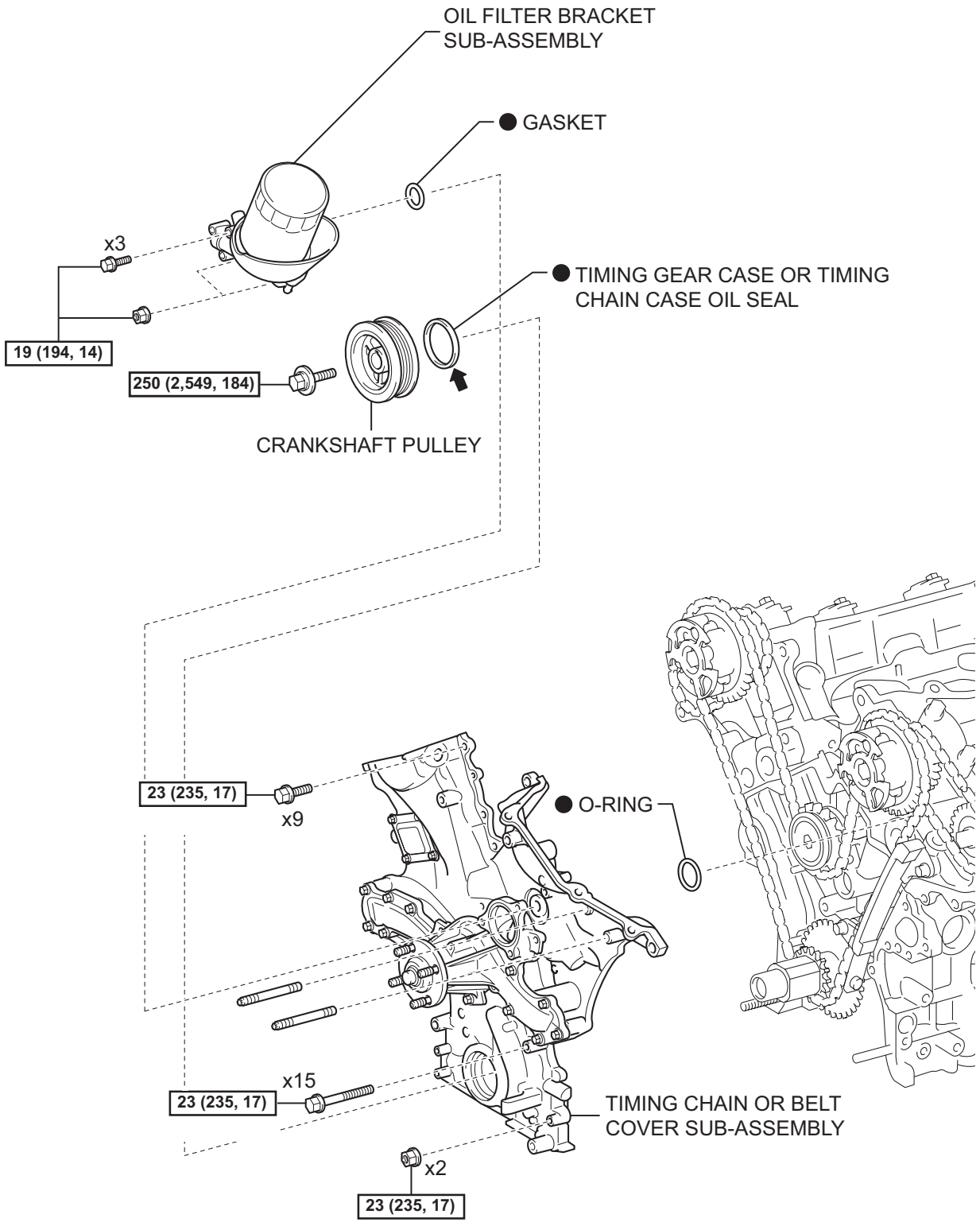

LU

N*m (kgf*cm, ft*lbf) : Specified torque

● Non-reusable part ⬅ Apply MP grease

Y

A126424E01

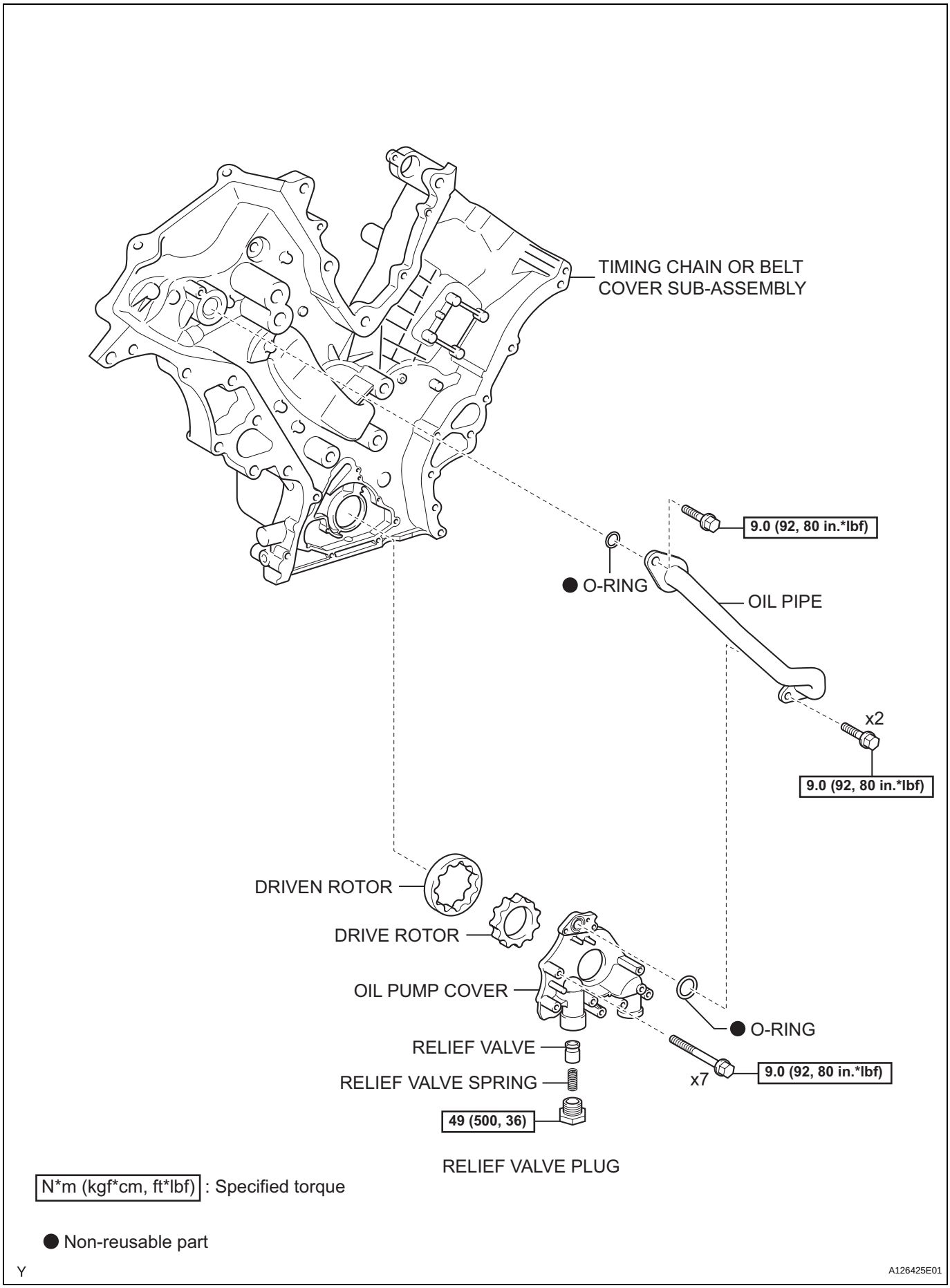
TIMING CHAIN OR BELT COVER SUB-ASSEMBLY
9.0 (92, 80 in.*lbf)
● O-RING
OIL PIPE
x2
9.0 (92, 80 in.*lbf)
DRIVEN ROTOR
DRIVE ROTOR
OIL PUMP COVER
● O-RING
RELIEF VALVE
RELIEF VALVE SPRING
x7
9.0 (92, 80 in.*lbf)
49 (500, 36)
RELIEF VALVE PLUG
N*m (kgf*cm, ft*lbf) : Specified torque
● Non-reusable part
Y
A126425E01

LU

REMOVAL

1. **REMOVE BATTERY**
2. **DRAIN ENGINE COOLANT (See page CO-3)**
3. **DRAIN ENGINE OIL (See page LU-4)**
4. **REMOVE POWER STEERING LINK ASSEMBLY (for 2WD)**
   Refer to the procedures up to "REMOVE POWER STEERING LINK ASSEMBLY" (See page PS-18).
5. **REMOVE POWER STEERING LINK ASSEMBLY (for 4WD)**
   Refer to the procedures up to "REMOVE POWER STEERING LINK ASSEMBLY" (See page PS-37).
6. **REMOVE FRONT DIFFERENTIAL CARRIER ASSEMBLY (for 4WD)**
   Refer to the procedures up to "REMOVE FRONT DIFFERENTIAL CARRIER ASSEMBLY" (See page DF-20).
7. **REMOVE FAN**
   Refer to the procedures up to "REMOVE FAN" (See page CO-17).
8. **REMOVE GENERATOR ASSEMBLY**
   Refer to the procedures up to "REMOVE GENERATOR ASSEMBLY" (See page CH-9)
9. **SEPARATE COOLER COMPRESSOR ASSEMBLY (See page ES-420)**
10. **REMOVE V-RIBBED BELT TENSIONER ASSEMBLY (See page EM-22)**
11. **REMOVE OIL LEVEL GAUGE GUIDE (See page EM-22)**
12. **SEPARATE VANE PUMP ASSEMBLY (See page EM-22)**
13. **REMOVE NO. 2 IDLER PULLEY SUB-ASSEMBLY (See page EM-23)**
14. **REMOVE NO. 1 IDLER PULLEY SUB-ASSEMBLY (See page EM-23)**
15. **REMOVE CRANKSHAFT PULLEY (See page EM-23)**
16. **REMOVE NO. 2 OIL PAN SUB-ASSEMBLY (See page EM-23)**
17. **REMOVE OIL STRAINER SUB-ASSEMBLY (See page EM-24)**
18. **REMOVE OIL PAN SUB-ASSEMBLY (See page EM-24)**
19. **REMOVE AIR CLEANER ASSEMBLY (See page ES-429)**

20. **REMOVE THROTTLE BODY BRACKET (See page FU-11)**
21. **REMOVE OIL BAFFLE PLATE (See page FU-11)**
22. **REMOVE NO. 1 SURGE TANK STAY (See page FU-11)**
23. **REMOVE NO. 2 SURGE TANK STAY (See page FU-12)**
24. **REMOVE INTAKE AIR SURGE TANK (See page FU-12)**
25. **REMOVE IGNITION COIL ASSEMBLY (See page IG-8)**
26. **REMOVE CAMSHAFT TIMING OIL CONTROL VALVE ASSEMBLY (See page ES-414)**
27. **REMOVE VVT SENSOR (See page ES-417)**
28. **REMOVE WATER INLET (See page CO-8)**
29. **REMOVE CYLINDER HEAD COVER SUB-ASSEMBLY (See page EM-40)**
30. **REMOVE CYLINDER HEAD COVER SUB-ASSEMBLY LH (See page EM-40)**
31. **REMOVE OIL FILTER BRACKET SUB-ASSEMBLY**
    (a) Remove the 3 bolts, 2 nuts, oil filter bracket and gasket.

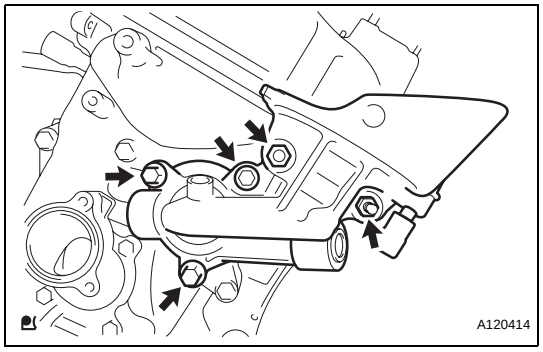

32. **REMOVE TIMING CHAIN OR BELT COVER SUB-ASSEMBLY**
    (a) Remove the 24 bolts and 2 nuts.

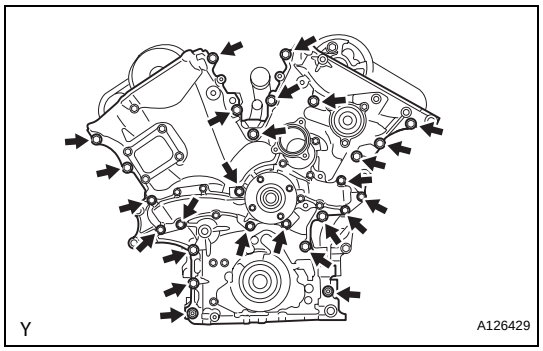

LU

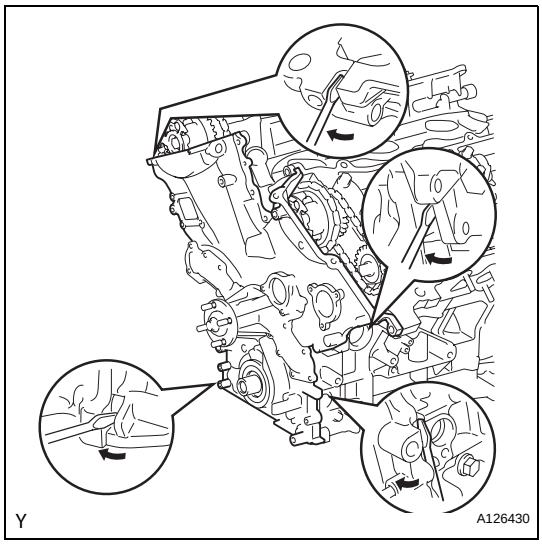

(b) Remove the timing chain cover by prying between the timing chain cover and cylinder head or cylinder block with a screwdriver.
NOTICE:
Be careful not to damage the contact surfaces of the timing chain cover, cylinder block and cylinder head.
(c) Remove the O-ring from the cylinder head LH.

33. REMOVE TIMING GEAR CASE OR TIMING CHAIN CASE OIL SEAL (See page EM-163)

DISASSEMBLY

1. REMOVE OIL PUMP COVER

(a) Remove the 3 bolts, then remove the oil pipe.
(b) Remove the 2 O-rings.

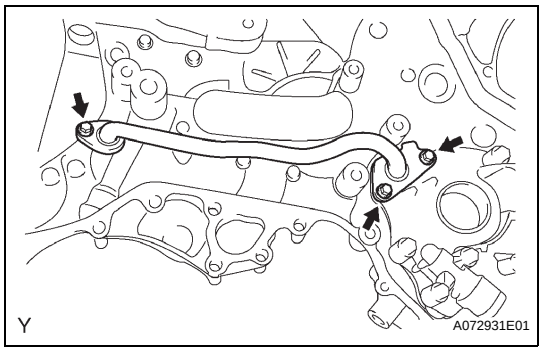

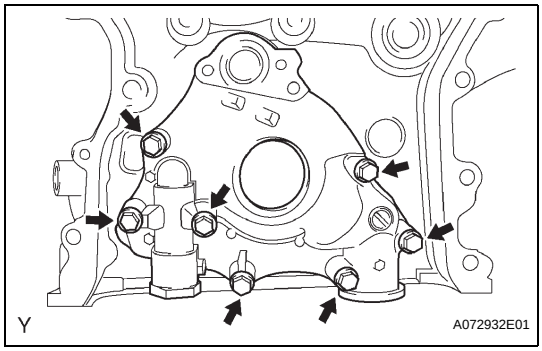

(c) Remove the 7 bolts, then remove the oil pump cover, drive rotor and driven rotor.

2. REMOVE OIL PUMP RELIEF VALVE

(a) Remove the relief valve plug.
(b) Remove the relief valve spring and relief valve.

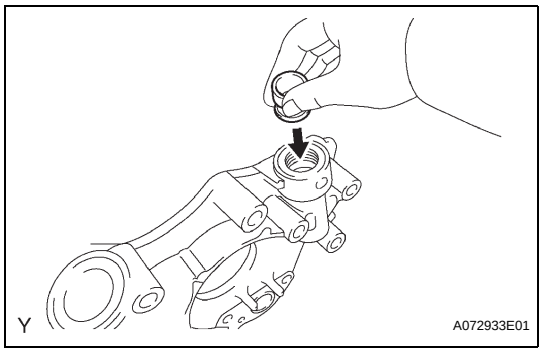

INSPECTION

1. INSPECT OIL PUMP RELIEF VALVE

(a) Coat the valve with engine oil, then check that it falls smoothly into the valve hole by its own weight.
If not, replace the relief valve. If necessary, replace the oil pump assembly.

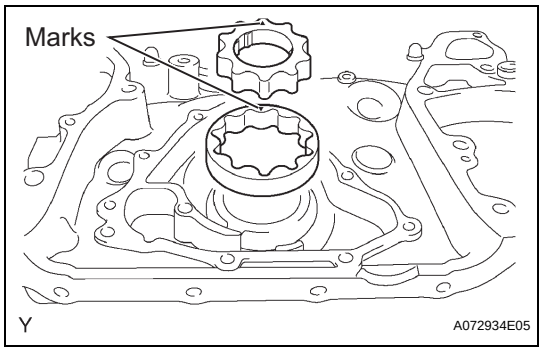

2. INSPECT OIL PUMP ROTOR SET

(a) Place the drive and driven rotors into the timing chain cover with the marks facing upward.

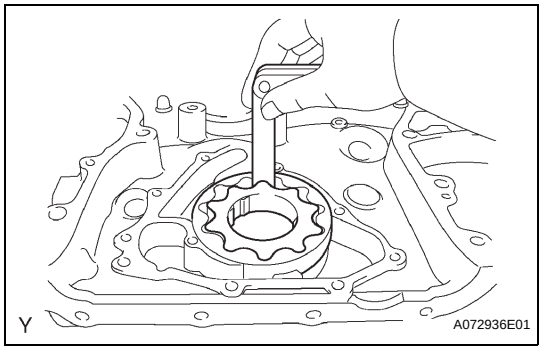

(b) Check the rotor tip clearance.

(1) Using a feeler gauge, measure the clearance between the drive and driven rotor tips.

Standard clearance:
0.06 to 0.16 mm (0.0024 to 0.0063 in.)
Maximum tip clearance:
0.16 mm (0.0063 in.)

If the clearance is greater than the maximum, replace the drive and driven rotors together.

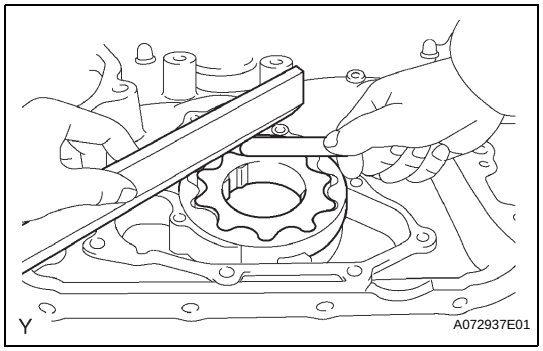

(c) Check the rotor side clearance.

(1) Using a feeler gauge and precision straight edge, measure the clearance between the rotors and precision straight edge.

Standard clearance:
0.03 to 0.09 mm (0.0012 to 0.0035 in.)
Maximum side clearance:
0.09 mm (0.0035 in.)

If the clearance is greater than the maximum, replace the drive and driven rotors. If necessary, replace the timing chain cover assembly.

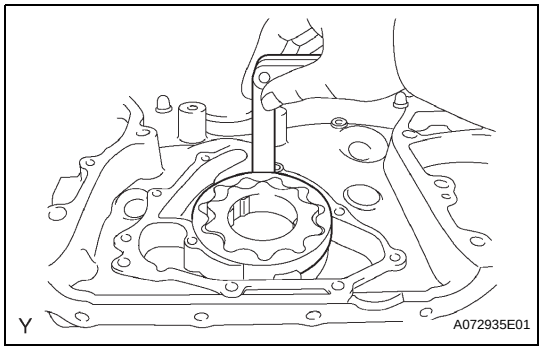

(d) Check the rotor body clearance.

(1) Using a feeler gauge, measure the clearance between the driven rotor and body.

Standard clearance:
0.250 to 0.325 mm (0.0098 to 0.0128 in.)
Maximum body clearance:
0.325 mm (0.0128 in.)

If the clearance is greater than the maximum, replace the drive and driven rotors. If necessary, replace the timing chain cover assembly.

REASSEMBLY

1. INSTALL OIL PUMP RELIEF VALVE

(a) Coat the relief valve with engine oil and insert the relief valve and spring into the valve hole.

(b) Install the relief valve plug.
Torque: 49 N*m (500 kgf*cm, 36 ft.*lbf)

2. INSTALL OIL PUMP COVER

(a) Apply fresh engine oil to the drive and driven rotors.

(b) Place the drive and driven rotors into the timing chain cover with the marks facing the oil pump cover side.

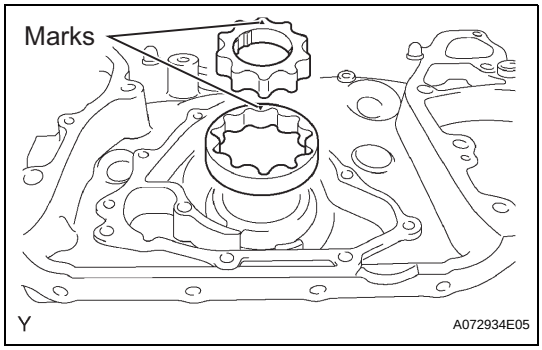

(c) Install the oil pump cover with the 7 bolts.
Torque: 9.0 N*m (92 kgf*cm, 80 in.*lbf)

(d) Install a new O-ring onto the oil pump cover.

(e) Install a new O-ring onto the oil pipe.

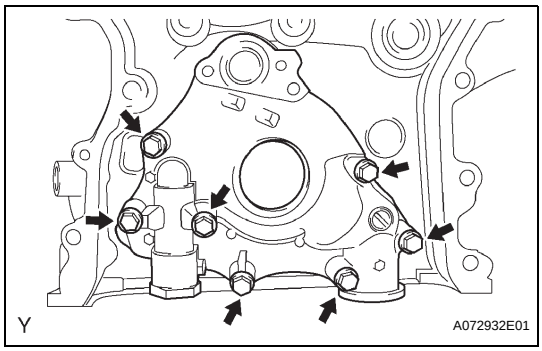

(f) Install the oil pipe with the 3 bolts.
Torque: 9.0 N*m (92 kgf*cm, 80 in.*lbf)

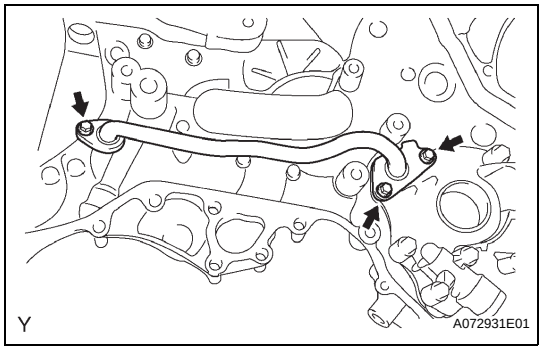

LU

INSTALLATION

1. INSTALL TIMING GEAR CASE OR TIMING CHAIN CASE OIL SEAL (See page EM-163)

2. INSTALL TIMING CHAIN OR BELT COVER SUB-ASSEMBLY

(a) Remove any old packing (FIPG) material.
HINT:
Do not drop any oil onto the contact surfaces of the timing chain cover, cylinder head or cylinder block.

(b) Install a new O-ring onto the LH cylinder head as shown in the illustration.

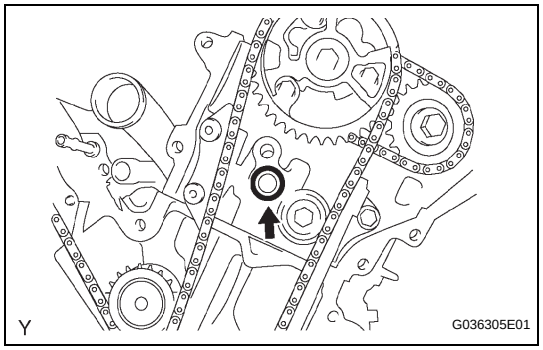

(c) Apply continuous beads of seal packing (diameter 3 to 4 mm (0.12 to 0.16 in.)) to the 4 locations shown in the illustration.
Seal packing:
Toyota Genuine Adhesive 1344, Three Bond 1344 or the equivalent

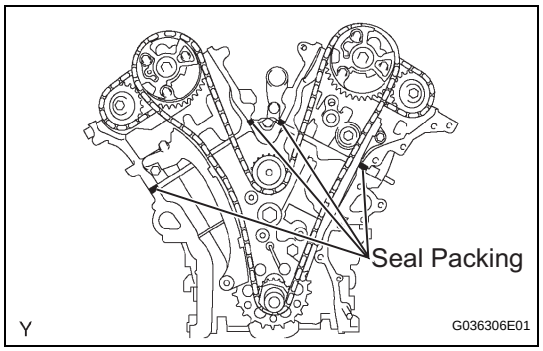

(d) Apply continuous beads of seal packing (diameter 3 to 4 mm (0.12 to 0.16 in.)) to the timing chain cover as shown in the illustration.
Seal packing:
Water pump part:
Toyota Genuine Seal Packing 1282B, Three Bond 1282B or the equivalent
Other parts:
Toyota Genuine Adhesive 1344, Three Bond 1344 or the equivalent
NOTICE:
- **Install the timing chain cover within 3 minutes of applying the seal packing. The timing chain cover bolts and nuts must be tightened within 15 minutes of the installation. Otherwise, the seal packing must be removed and reapplied.**
- **Do not apply seal packing to portion A shown in the illustration.**

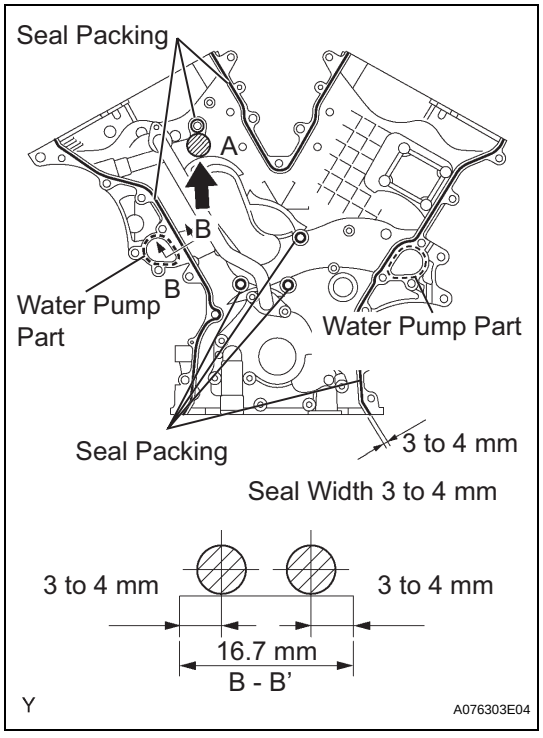

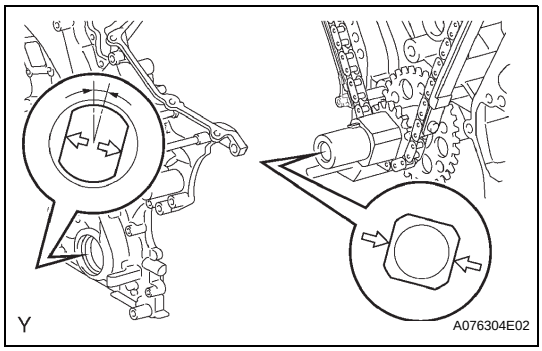

(e) Align the key way of the oil pump drive rotor with the rectangular portion of the crankshaft timing gear, and slide the timing chain cover into place.

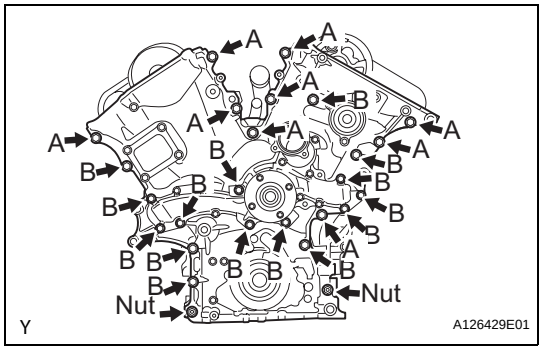

(f) Install the timing chain cover with the 24 bolts and 2 nuts. Tighten the bolts and nuts uniformly in several steps.
Torque: 23 N*m (235 kgf*cm, 17 ft.*lbf)
NOTICE:
Pay attention not to wrap the chain and slipper over the timing chain cover seal line.
Each bolt length is as follows

Bolt	Length
A	25 mm (0.98 in.)
B	55 mm (2.17 in.)

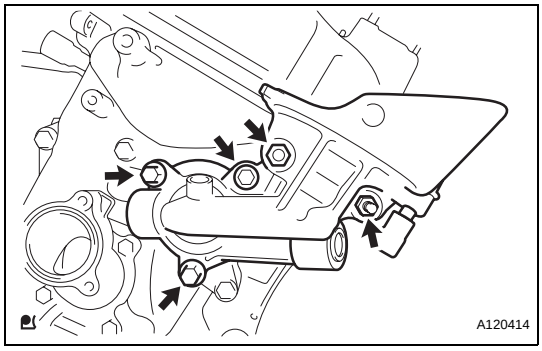

3. **INSTALL OIL FILTER BRACKET SUB-ASSEMBLY**
   (a) Install a new gasket and oil filter bracket with the 3 bolts and 2 nuts.
   Torque: 19 N*m (194 kgf*cm, 14 ft.*lbf)
4. **INSTALL CYLINDER HEAD COVER SUB-ASSEMBLY LH (See page EM-57)**
5. **INSTALL CYLINDER HEAD COVER SUB-ASSEMBLY (See page EM-58)**
6. **INSTALL WATER INLET (See page CO-9)**
7. **INSTALL VVT SENSOR (See page ES-417)**
8. **INSTALL CAMSHAFT TIMING OIL CONTROL VALVE ASSEMBLY (See page ES-415)**
9. **INSTALL IGNITION COIL ASSEMBLY (See page IG-8)**
10. **INSTALL INTAKE AIR SURGE TANK (See page FU-17)**
11. **INSTALL NO. 2 SURGE TANK STAY (See page FU-19)**
12. **INSTALL NO. 1 SURGE TANK STAY (See page FU-19)**
13. **INSTALL OIL BAFFLE PLATE (See page FU-19)**
14. **INSTALL THROTTLE BODY BRACKET (See page FU-19)**
15. **INSTALL AIR CLEANER ASSEMBLY (See page ES-431)**
16. **INSTALL OIL PAN SUB-ASSEMBLY (See page EM-30)**
17. **INSTALL OIL STRAINER SUB-ASSEMBLY (See page EM-31)**

18. **INSTALL NO. 2 OIL PAN SUB-ASSEMBLY (See page EM-31)**
19. **INSTALL CRANKSHAFT PULLEY (See page EM-32)**
20. **INSTALL NO. 1 IDLER PULLEY SUB-ASSEMBLY (See page EM-32)**
21. **INSTALL NO. 2 IDLER PULLEY DUB-ASSEMBLY (See page EM-33)**
22. **INSTALL VANE PUMP ASSEMBLY (See page EM-33)**
23. **INSTALL OIL LEVEL GAUGE GUIDE (See page EM-33)**
24. **INSTALL V-RIBBED BELT TENSIONER ASSEMBLY (See page EM-33)**
25. **INSTALL COOLER COMPRESSOR ASSEMBLY (See page ES-421)**
26. **INSTALL GENERATOR ASSEMBLY**
    Refer to the procedures up to "INSTALL GENERATOR ASSEMBLY" (See page CH-17).
27. **INSTALL FAN**
    Refer to the procedures up to "INSTALL FAN" (See page CO-17).
28. **INSTALL FRONT DIFFERENTIAL CARRIER ASSEMBLY (for 4WD)**
    Refer to the procedures up to "INSTALL FRONT DIFFERENTIAL CARRIER ASSEMBLY" (See page DF-42).
29. **INSTALL POWER STEERING LINK ASSEMBLY (for 2WD)**
    Refer to the procedures up to "INSTALL POWER STEERING LINK ASSEMBLY" (See page PS-30).
30. **INSTALL POWER STEERING LINK ASSEMBLY (for 4WD)**
    Refer to the procedures up to "INSTALL POWER STEERING LINK ASSEMBLY" (See page PS-49).
31. **INSTALL BATTERY**
32. **ADD ENGINE COOLANT (See page CO-3)**
33. **ADD ENGINE OIL (See page LU-5)**
34. **ADD POWER STEERING FLUID**
35. **BLEED POWER STEERING FLUID (See page PS-2)**
36. **ADD DIFFERENTIAL OIL (for 4WD)**
37. **INSPECT DIFFERENTIAL OIL (for 4WD) (See page DF-3)**
38. **CHECK FOR ENGINE COOLANT LEAKAGE (See page CO-4)**
39. **CHECK FOR ENGINE OIL LEAKAGE**

40. **CHECK FOR FUEL LEAKAGE**
41. **CHECK FOR EXHAUST GAS LEAKAGE**
42. **CHECK POWER STEERING FLUID LEAKAGE**
43. **INSPECT AND ADJUST FRONT WHEEL ALIGNMENT**
(See page SP-2)

OUTSIDE VEHICLE

GENERAL MAINTENANCE

Performing the following maintenance checks on the vehicle is the owner's responsibility. The owner may perform the maintenance or take the vehicle to a service center. Check the parts of the vehicle described below on a daily basis. In most cases, special tools are not required. It is recommended that the owner performs these checks. The procedures for general maintenance are as follows.

1. GENERAL NOTES

- Maintenance requirements vary depending on the country.
- Check the maintenance schedule in the owner's manual supplement.
- Following the maintenance schedule is mandatory.
- Determine the appropriate time to service the vehicle using either miles driven or months elapsed, whichever reaches the specification first.
- Maintain similar intervals between periodic maintenance, unless otherwise noted.
- Failing to check each vehicle part could lead to poor engine performance and increase exhaust emissions.

2. TIRES

(a) Check the tire inflation pressure with a gauge. Make adjustments if necessary.

(b) Check the surfaces of the tires for cuts, damage or excessive wear.

3. WHEEL NUTS

(a) Check for nuts that are loose or missing. Tighten them if necessary.

4. TIRE ROTATION (See page TW-1)

5. WINDSHIELD WIPER BLADES

(a) Check the blades for wear or cracks whenever they are unable to wipe the windshield clean. Replace them if necessary.

6. FLUID LEAKS

(a) Check under the vehicle for leaking fuel, oil, water and other fluids.
NOTICE:
If you smell gasoline fumes or notice any leaks, locate the cause and correct it.

7. DOORS AND ENGINE HOOD

(a) Check that all of the doors and the hood operate smoothly and that all the latches lock securely.

(b) When the primary latch is released, check that the engine hood secondary latch prevents the hood from opening.

INSIDE VEHICLE

GENERAL MAINTENANCE

Performing the following maintenance checks on the vehicle is the owner's responsibility. The owner may perform the maintenance or take the vehicle to a service center. Check the parts of the vehicle described below on a daily basis. In most cases, special tools are not required. It is recommended that the owner performs these checks. The procedures for general maintenance are as follows.

1. GENERAL NOTES

- Maintenance requirements vary depending on the country.
- Check the maintenance schedule in the owner's manual supplement.
- Following the maintenance schedule is mandatory.
- Determine the appropriate time to service the vehicle using either miles driven or months elapsed, whichever reaches the specification first.
- Maintain similar intervals between periodic maintenance, unless otherwise noted.
- Failing to check each vehicle part could lead to poor engine performance and increase exhaust emissions.

2. LIGHTS

(a) Check that the headlights, stop lights, taillights, turn signal lights, and other lights illuminate or blink properly. Also, check if they have enough brightness.

(b) Check that the headlights are aimed properly.

3. WARNING LIGHTS AND BUZZERS

(a) Check that all the warning lights and buzzers are working.

4. HORNS

(a) Check that the horn is working.

5. WINDSHIELD GLASS

(a) Check for scratches, pits or abrasions.

6. WINDSHIELD WIPERS AND WASHER

(a) Check that the windshield washers are aimed properly. Also, check that the center stream of washer fluid sprays on the windshield within the operating range of the wipers.

(b) Check if the wipers streak or not.

7. WINDSHIELD DEFROSTER

(a) When the heater or air conditioning is on the defroster setting, check if air comes out of the defroster outlet.

8. REAR VIEW MIRROR

(a) Check that the rear view mirror is securely mounted.

9. SUN VISORS

(a) Check that the sun visors move freely and are securely mounted.

10. STEERING WHEEL

(a) Check that the steering wheel has the proper amount of free play. Also check for steering difficulty, free play in the steering wheel and unusual noises.

11. SEATS

(a) Check that all front seat controls such as seat adjusters, seatback recliner, etc. operate smoothly.
(b) Check that all latches lock securely in any position.
(c) Check that the headrests move up and down smoothly and that the locks hold securely in any latch position.
(d) For folding-down rear seatbacks, check that the latches look securely.

12. SEAT BELTS

(a) Check that the seat belt system such as the buckles, retractors and anchors operate properly and smoothly.
(b) Check that the belt webbing is not cut, frayed, worn or damaged. Replace if necessary.

13. ACCELERATOR PEDAL

(a) Check that the accelerator pedal operates smoothly. In other words, check that the pedal does not have uneven pedal resistance or become stuck in certain positions.

14. BRAKE PEDAL

(a) Check that the brake pedal operates smoothly.
(b) Check that the pedal has the proper reserve distance and free play.
(c) Start the engine and check the brake booster function.

15. BRAKES

(a) In a safe place, check that the vehicle remains straight when applying the brakes.

16. PARKING BRAKE

(a) Check that the parking brake lever has the proper amount of travel (see page PB-4).
(b) On a safe incline, check that the vehicle is held securely with only the parking brake applied.

17. AUTOMATIC TRANSMISSION "PARK" MECHANISM

(a) Check the lock release button of the shift lever for proper and smooth operation.
(b) When the shift lever is in the P position and all brakes are released on a low incline, check that the vehicle is stable.

UNDER HOOD

GENERAL MAINTENANCE

1. GENERAL NOTES

- Maintenance requirements vary depending on the country.
- Check the maintenance schedule in the owner's manual supplement.
- Following the maintenance schedule is mandatory.
- Determine the appropriate time to service the vehicle using either miles driven or time elapsed, whichever reaches the specification first.
- Maintain similar intervals between periodic maintenance, unless otherwise noted.
- Failing to check each vehicle part could lead to poor engine performance and increase exhaust emissions.

2. WINDSHIELD WASHER FLUID

(a) Check that there is sufficient fluid in the tank.

3. ENGINE COOLANT LEVEL

(a) Check that the coolant level is between the "FULL" and "LOW" lines on the see-through reservoir.

4. RADIATOR AND HOSES

(a) Check that the front of the radiator is clean and not blocked by leaves, dirt or bugs.

(b) Check the hoses for cracks, kinks, rot or loose connections.

5. BATTERY ELECTROLYTE LEVEL

(a) Check that the electrolyte level of all the battery cells is between the upper and lower level lines on the case.

6. BRAKE FLUID LEVEL

(a) Check that the brake fluid levels are near the upper level lines on the see-through reservoirs.

7. ENGINE DRIVE BELT

(a) Check the drive belt for fraying, cracks, wear or oiliness.

8. ENGINE OIL LEVEL

(a) Check the level on the dipstick with the engine stopped.

9. INSPECT POWER STEERING FLUID LEVEL

(a) Check the level on the dipstick.
NOTICE:
The level should be in the "HOT" or "COLD" range depending on the fluid temperature.

10. AUTOMATIC TRANSMISSION FLUID LEVEL

(a) Check the level of the automatic transmission fluid.

Type	See Procedure
A750E	See page AT-141
A750F	See page AT-148

11. EXHAUST SYSTEM

(a) Visually inspect for cracks, holes or loose supports.
HINT:
If any change in the sound of the exhaust or smell of the exhaust fumes is noticed, have the cause inspected and repaired.

ENGINE

GENERAL MAINTENANCE

HINT:
Inspect these items when the engine is cold.

1. **INSPECT TIMING CHAIN (See page EM-27)**
2. **INSPECT VALVE CLEARANCE (See page EM-9)**
3. **INSPECT DRIVE BELT (See page EM-6)**
4. **REPLACE ENGINE OIL AND OIL FILTER (See page LU-4)**
5. **REPLACE ENGINE COOLANT (See page CO-3)**
6. **INSPECT EXHAUST PIPES AND MOUNTINGS**
   (a) Visually inspect the pipes, hangers and connections for severe corrosion, leaks or damage.
7. **INSPECT AIR CLEANER FILTER**
   (a) Remove the air cleaner case and air cleaner filter.
   (b) Visually check that the air cleaner filter is not excessively damaged or oily.
   If necessary, replace the air cleaner filter with a new one.
   (c) Clean the filter with compressed. First blow from the inside thoroughly, then blow off the outside of the filter.
   (d) Reinstall the air cleaner filter and air cleaner case.
8. **INSPECT FUEL LINES, CONNECTIONS AND FUEL TANK VAPOR VENT SYSTEM HOSES AND FUEL TANK BAND**
   (a) Visually inspect the fuel lines for cracks, leakage loose connections, deformation or tank band looseness.
9. **INSPECT GASKET IN FUEL TANK CAP**
   (a) Visually check if the cap and / or gasket are deformed or damaged.
   If necessary, repair or replace the cap.
10. **REPLACE SPARK PLUGS (See page IG-5)**
11. **INSPECT CHARCOAL CANISTER**
    HINT:
    For vehicles registered in California, Massachusetts and New York only.
    (a) Check the canister for cracks or damage (see page EC-10).

BRAKE

GENERAL MAINTENANCE

1. INSPECT BRAKE LINE PIPES AND HOSES

HINT:

Check in a well lighted area. Check the entire circumference and length of the brake hoses using a mirror as necessary. Turn the front wheels fully right or left before checking the front brakes.

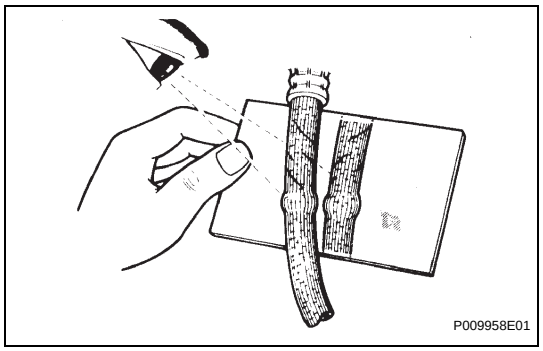

(a) Check all brake lines and hoses for:
- Damage
- Wear
- Deformation
- Cracks
- Corrosion
- Leaks
- Bends
- Twists

(b) Check all clamps for tightness and connections for leakage.

(c) Check that the hoses and lines are clear of sharp edges, moving parts and the exhaust system.

(d) Check that the lines installed in the grommets pass through the center of the grommets.

2. INSPECT FRONT BRAKE

(a) Check the front brake pads and discs (see page BR-43).

3. INSPECT REAR BRAKE

(a) Check the rear brake pads and discs (see page BR-51).

CHASSIS

GENERAL MAINTENANCE

1. INSPECT STEERING LINKAGE

(a) Check the steering linkage for looseness or damage.
  (1) Check that the tie rod ends do not have excessive play.
  (2) Check that the dust seals and boots are not damaged.
  (3) Check that the boot clamps are not loose.

(b) Inspect the dust cover for damage.

2. INSPECT STEERING GEAR HOUSING OIL

(a) Check the steering gear housing for oil leakage. If leakage is found, check for the cause and repair it.

3. INSPECT BALL JOINT AND DUST COVER

(a) Jack up the front of the vehicle and support it with stands.

(b) Make sure the front wheels are in a straight-ahead position, and depress the brake pedal.

(c) Jack up the lower suspension arm until there is about half a load on the front suspension.

(d) Inspect the dust cover for damage.

4. INSPECT DRIVE SHAFT BOOTS (for 4WD)

(a) Inspect the drive shaft boots for clamp looseness, grease leakage or damage.

5. INSPECT TRANSFER OIL (for 4WD)

(a) Remove the filler plug and feel inside the hole with your finger. Check that the oil comes to within 5 mm (0.20 in.) of the bottom edge of the hole. If the level is low, add oil until it begins to run out of the filler hole.

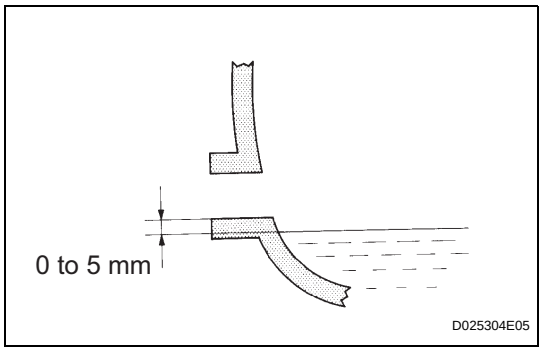

6. INSPECT DIFFERENTIAL OIL

(a) Remove the filler plug and feel inside the hole with your finger. Check that the oil comes to within 5 mm (0.20 in.) of the bottom edge of the hole. If the level is low, add oil until it begins to run out of the filler hole.

7. REPLACE AUTOMATIC TRANSMISSION FLUID LEVEL

(a) Check the level of the automatic transmission fluid.

Type	See Procedure
A750E	See page AT-141
A750F	See page AT-148

8. LUBRICATE PROPELLER SHAFT AND TIGHTEN BOLTS

(a) 4WD:

(1) Lubricate propeller shaft, referring to the lubrication chart. Before pumping in grease, wipe off any mud and dust on the grease fitting.

Grease grade:

Spider:

Lithium base chassis grease (NLGI No.2)

Slide yoke and double-cardan joint:

Molybdenum diaulphide lithium base chassis grease (NLGI No.2)

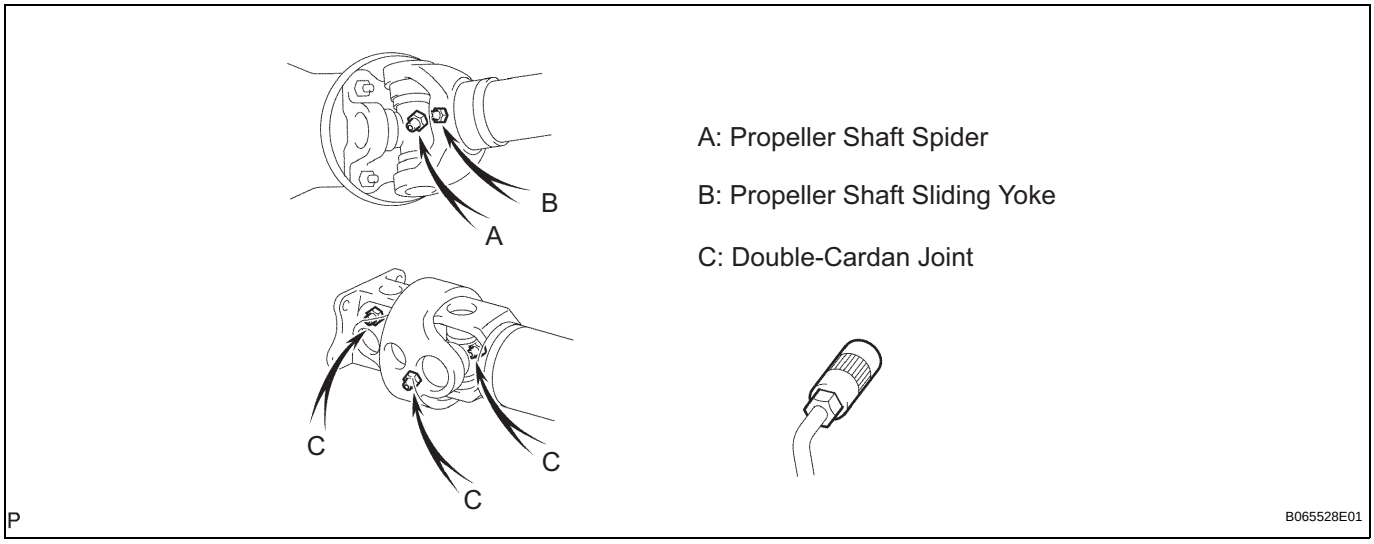

(b) Tighten the bolts of the propeller shaft.

Type	See Procedure
Front propeller shaft	See page PR-6
Rear propeller shaft (for 2WD)	See page PR-14
Rear propeller shaft (for 4WD)	See page PR-14

9. INSPECT MANUAL TRANSMISSION OIL (See page MT-2)

BODY

GENERAL MAINTENANCE

1. INSPECT BOLTS AND NUTS ON CHASSIS AND BODY

(a) In addition to the scheduled maintenance items, check for loose or missing bolts and nuts of the following.
Canada:
- Steering system
- Drive train
- Suspension system
- Fuel tank mounts
- Engine mounts, etc.

2. FINAL INSPECTION

(a) Check the operation of the body parts:
(1) Hood:
- Auxiliary catch operates properly
- Hood locks securely when closed

(2) Front and rear doors:
- Door locks operate properly
- Doors close properly

(3) Back door:
- Door lock operates properly

(4) Seats:
- Seat adjusts easily and locks securely in any position
- Front seatback locks securely in any position
- Folding down rear seatbacks lock securely.

(b) Be sure to deliver a clean car. Especially check:
- Steering wheel
- Shift lever knob
- All switch knobs
- Door handles
- Seats

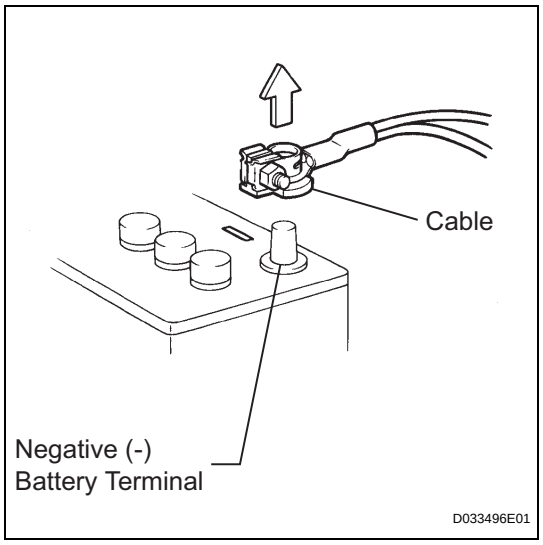

METER / GAUGE SYSTEM

PRECAUTION

1. DISCONNECT AND RECONNECT CABLE OF NEGATIVE BATTERY TERMINAL

(a) Before performing electronic work, disconnect the cable from the negative (-) battery terminal in order to prevent it from shorting and burning out.

(b) Before disconnecting and reconnecting the battery cable, turn the ignition switch OFF and the headlight dimmer switch OFF. Then loosen the terminal nut completely. Do not damage the cable or terminal.

(c) When the battery cable is disconnected, the clock and radio settings and stored DTCs are erased. Therefore, before disconnecting the battery cable, make a note of them.

NOTICE:

When the cable is disconnected from the negative (-) battery terminal, initialize the following system(s) after the cable is reconnected.

System name	See procedure
METER / GAUGE SYSTEM	ME-10

PARTS LOCATION

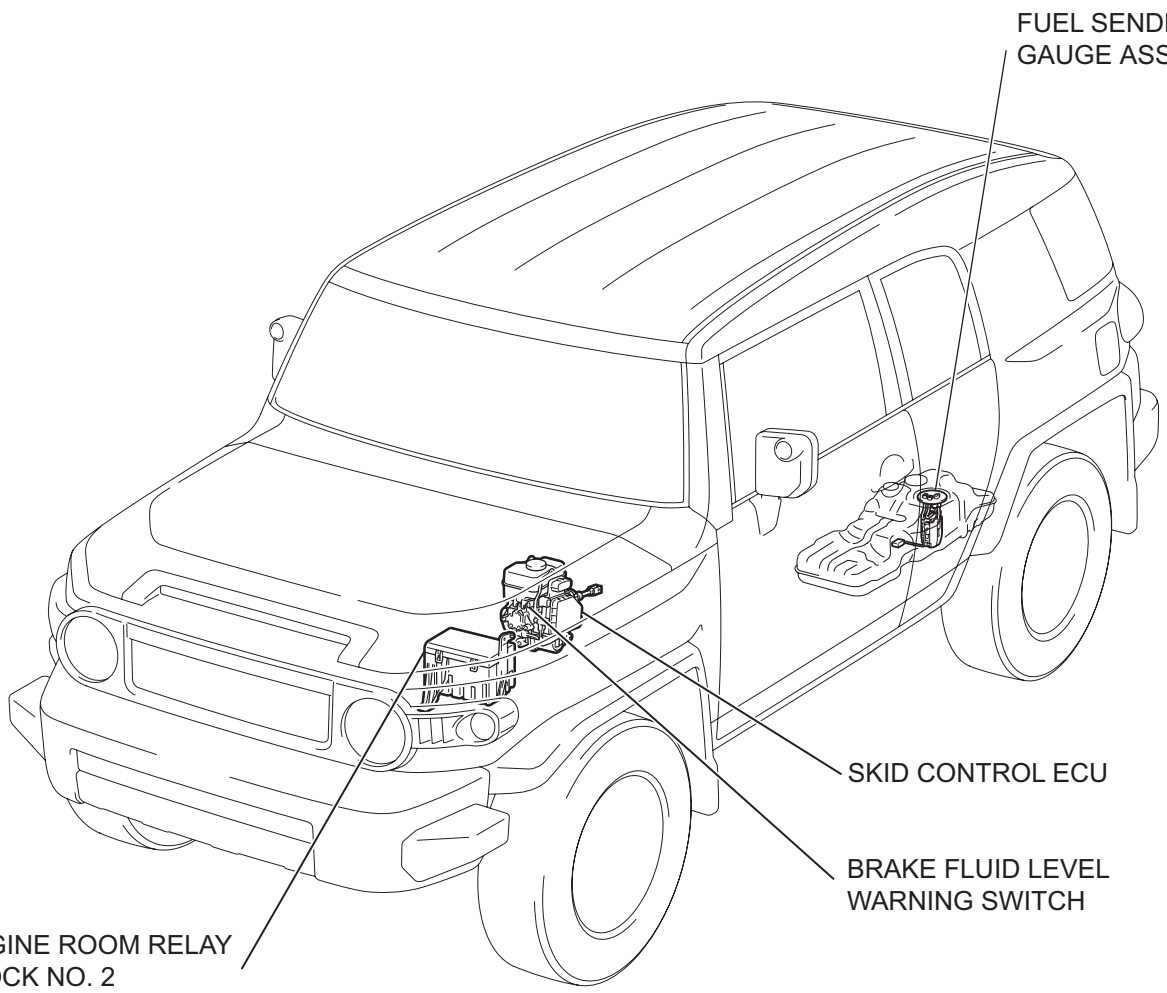

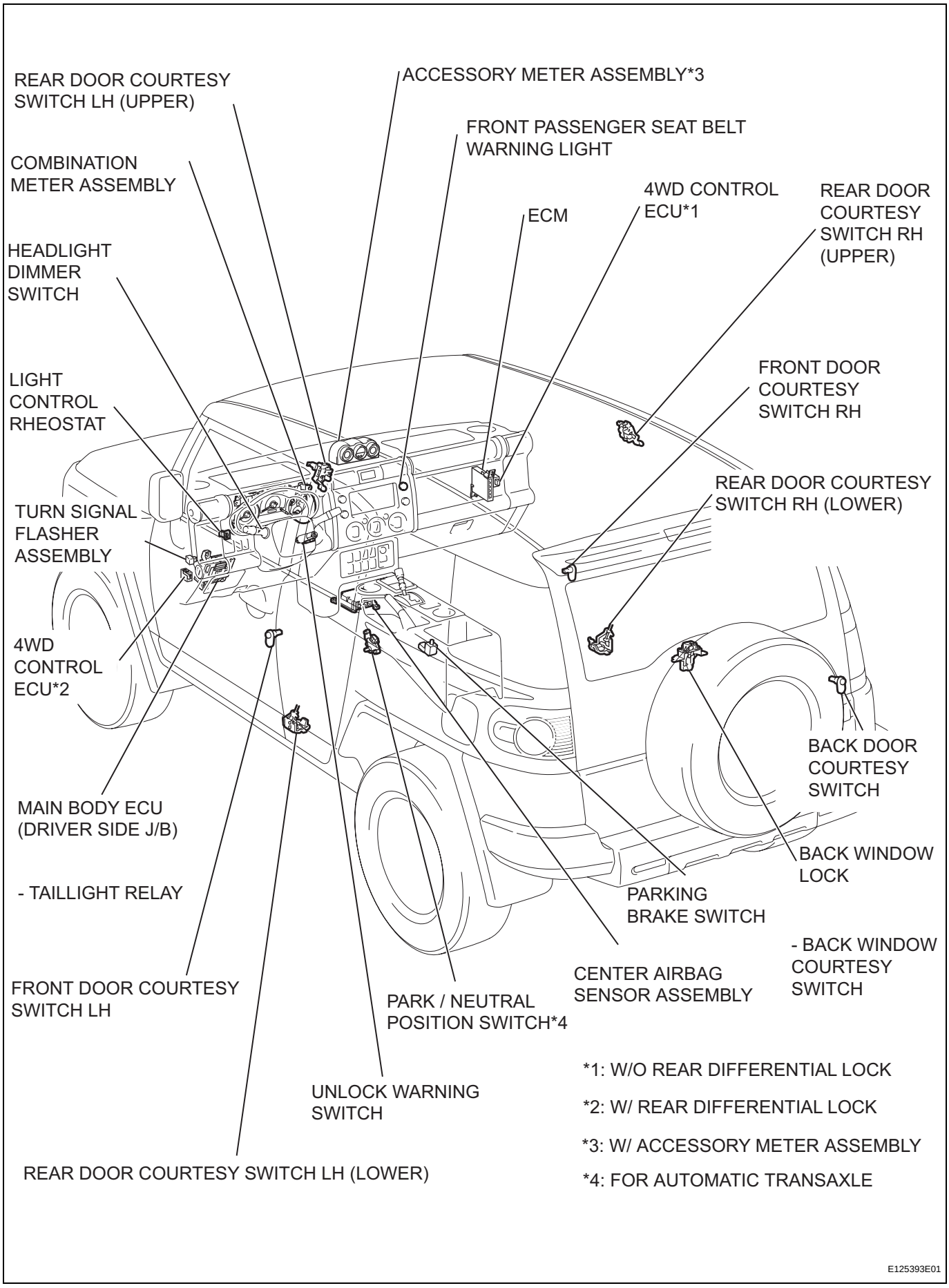
REAR DOOR COURTESY SWITCH LH (UPPER)
ACCESSORY METER ASSEMBLY*3
FRONT PASSENGER SEAT BELT WARNING LIGHT
COMBINATION METER ASSEMBLY
4WD CONTROL ECU*1
REAR DOOR COURTESY SWITCH RH (UPPER)
ECM
HEADLIGHT DIMMER SWITCH
LIGHT CONTROL RHEOSTAT
FRONT DOOR COURTESY SWITCH RH
REAR DOOR COURTESY SWITCH RH (LOWER)
TURN SIGNAL FLASHER ASSEMBLY
4WD CONTROL ECU*2
BACK DOOR COURTESY SWITCH
MAIN BODY ECU (DRIVER SIDE J/B)
BACK WINDOW LOCK
- TAILLIGHT RELAY
PARKING BRAKE SWITCH
- BACK WINDOW COURTESY SWITCH
FRONT DOOR COURTESY SWITCH LH
CENTER AIRBAG SENSOR ASSEMBLY
PARK / NEUTRAL POSITION SWITCH*4
UNLOCK WARNING SWITCH
REAR DOOR COURTESY SWITCH LH (LOWER)
*1: W/O REAR DIFFERENTIAL LOCK
*2: W/ REAR DIFFERENTIAL LOCK
*3: W/ ACCESSORY METER ASSEMBLY
*4: FOR AUTOMATIC TRANSAXLE
E125393E01

ME

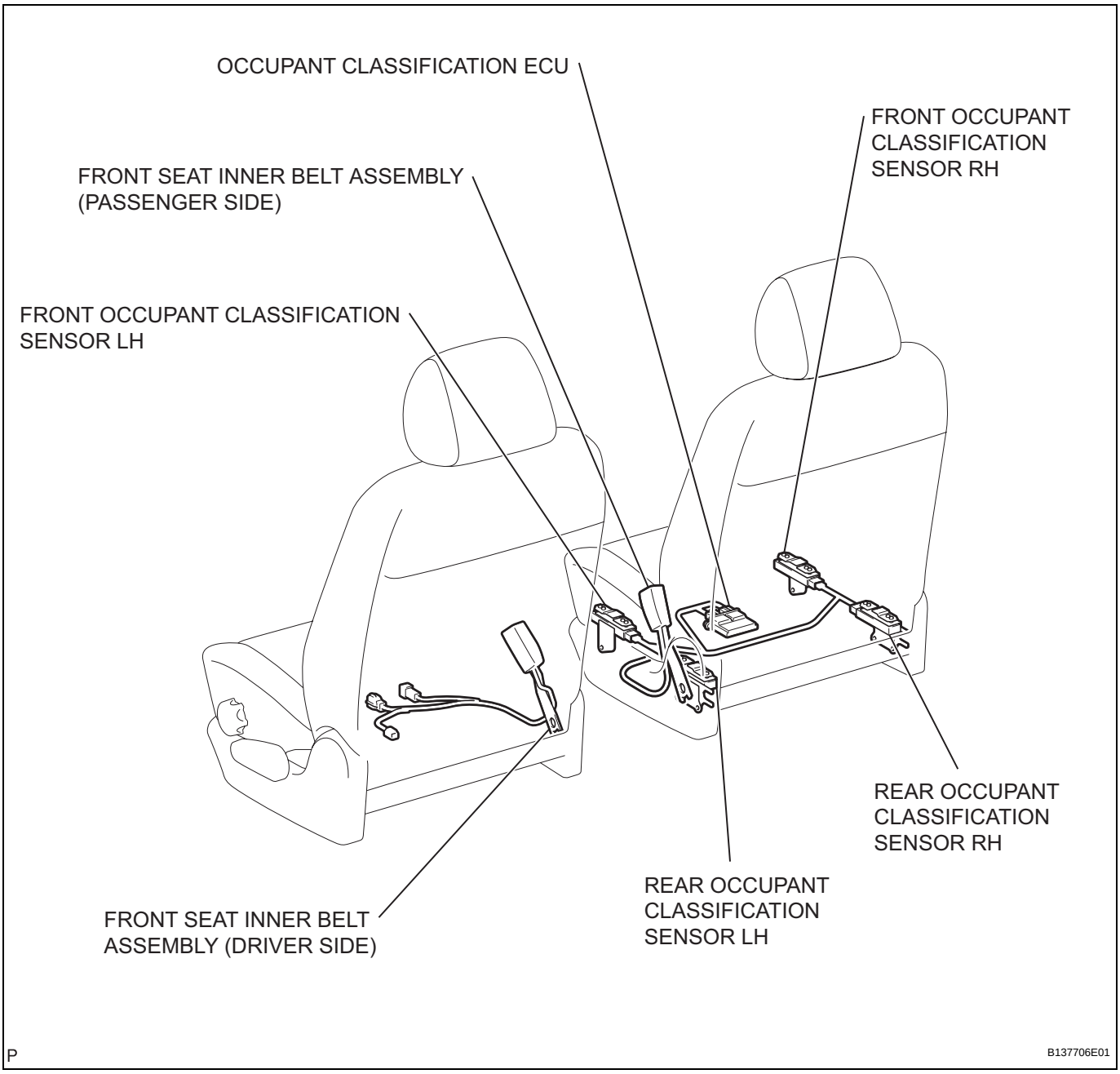
OCCUPANT CLASSIFICATION ECU
FRONT OCCUPANT CLASSIFICATION SENSOR RH
FRONT SEAT INNER BELT ASSEMBLY (PASSENGER SIDE)
FRONT OCCUPANT CLASSIFICATION SENSOR LH
REAR OCCUPANT CLASSIFICATION SENSOR RH
REAR OCCUPANT CLASSIFICATION SENSOR LH
FRONT SEAT INNER BELT ASSEMBLY (DRIVER SIDE)
P
B137706E01

ME

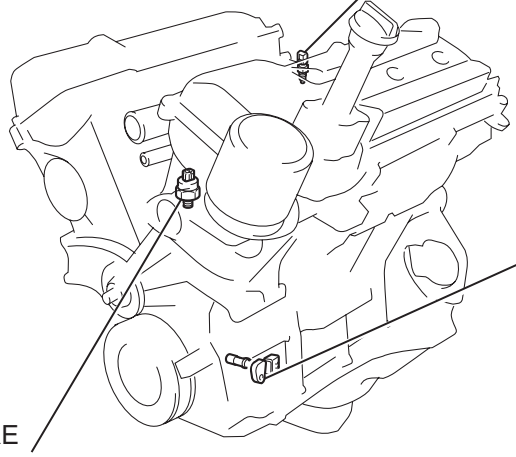

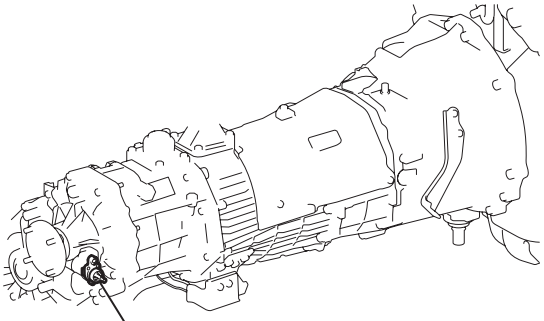

*: FOR M/T

E125395E01

SYSTEM DIAGRAM

1. COMBINATION METER ASSEMBLY

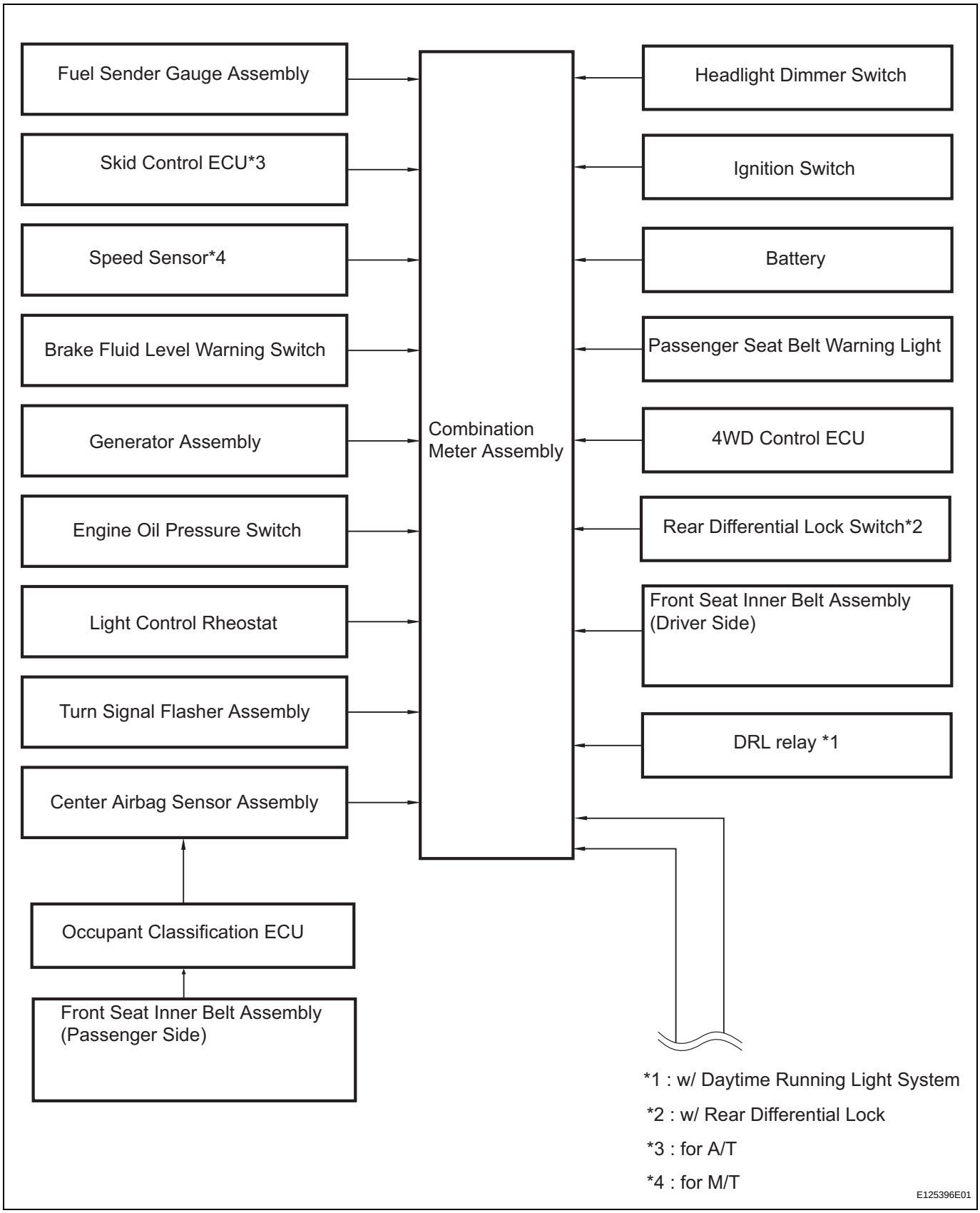

ME

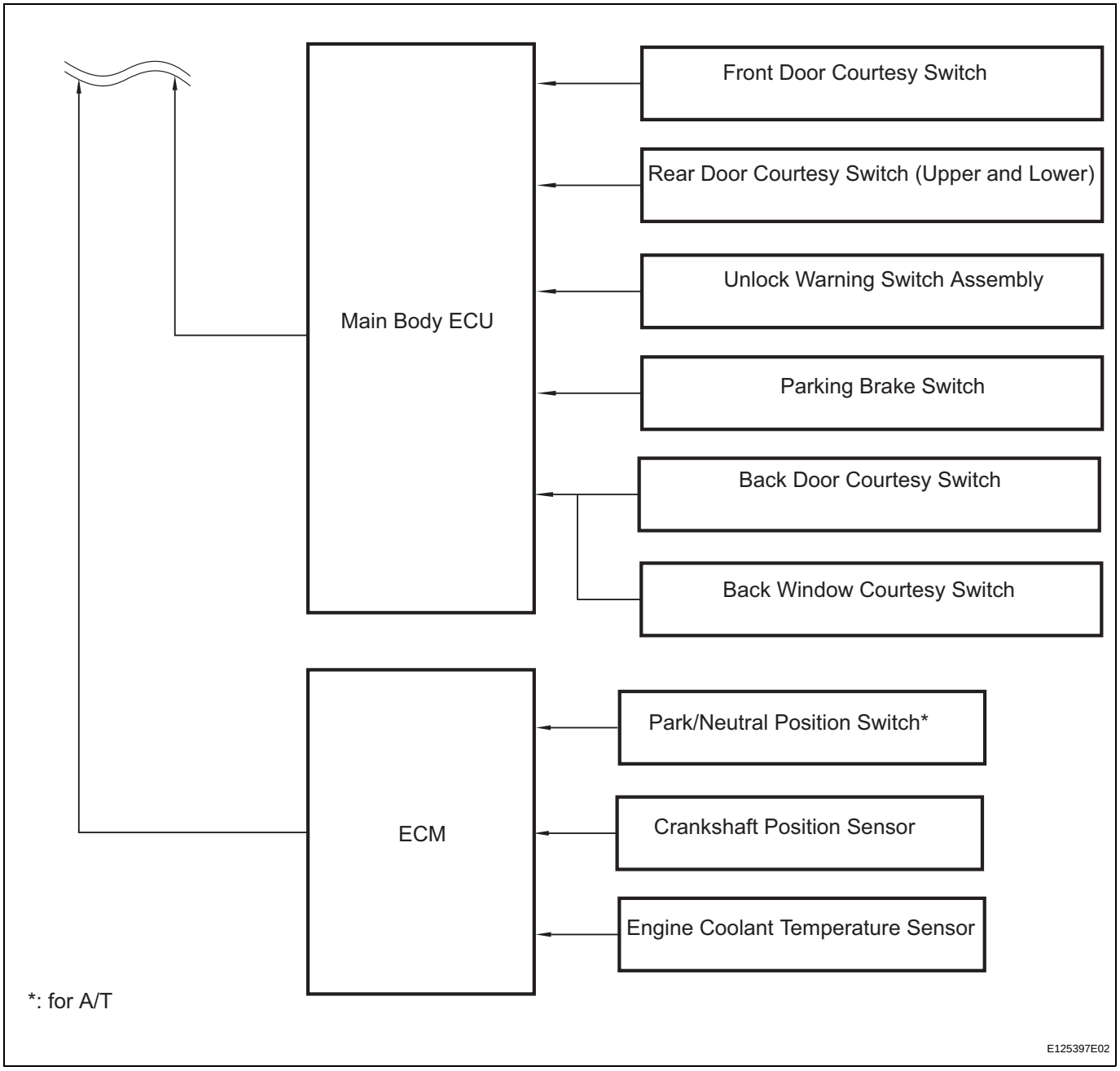

2. ACCESSORY METER ASSEMBLY

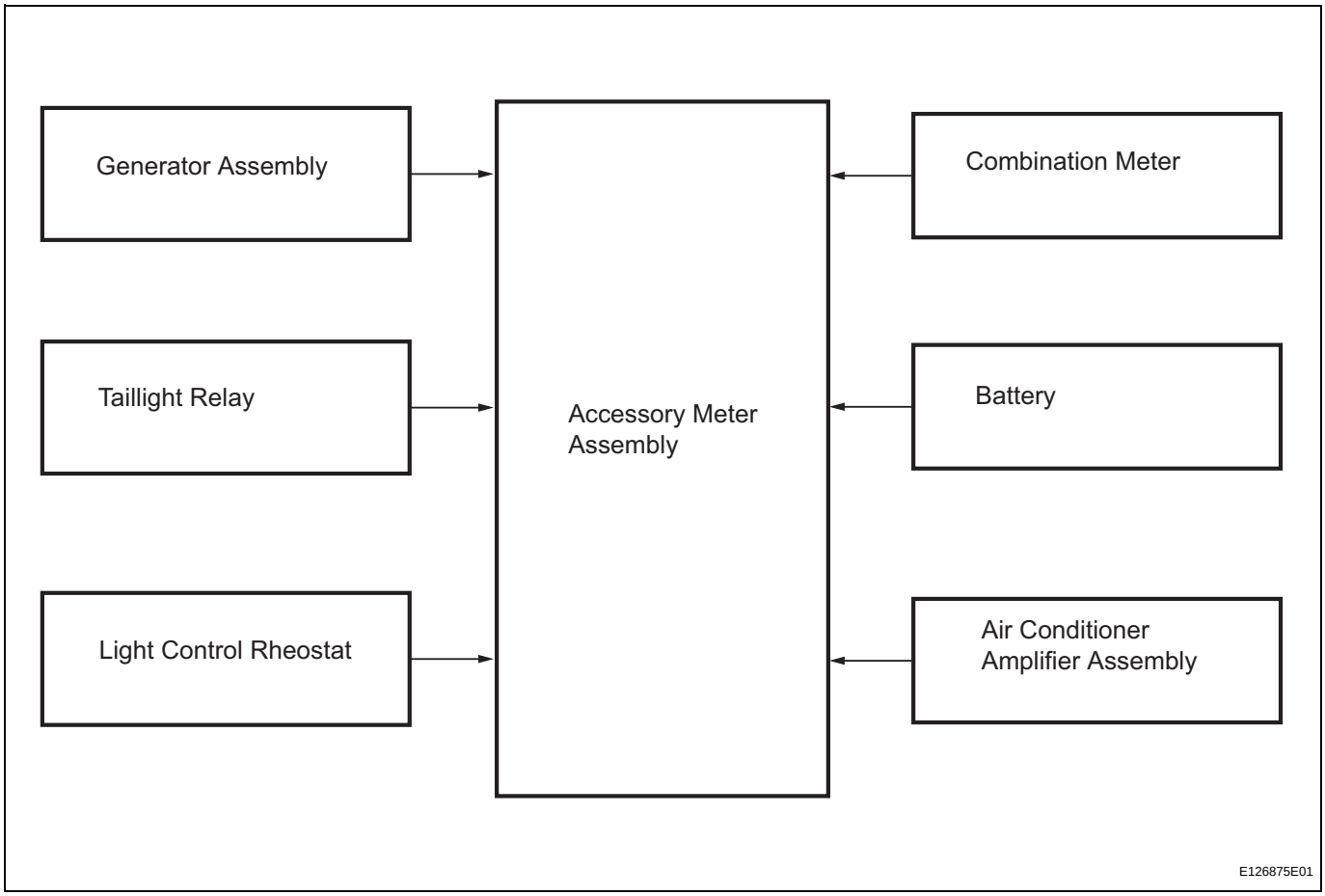
Generator Assembly
Taillight Relay
Light Control Rheostat
Accessory Meter Assembly
Combination Meter
Battery
Air Conditioner Amplifier Assembly
E126875E01

SYSTEM DESCRIPTION

1. METER GAUGE AND WARNING INDICATOR

GAUGE

Item	Signal Description
Speedometer	Indicates vehicle speed based on signals received from speed sensor (Direct line)
Tachometer	Indicates engine speed based on signals from ECM (Direct line)
ODO / TRIP meter	Calculates accumulated total vehicle travel distance and vehicle travel distance since trip meter knob pressed
Fuel Gauge	Indicates fuel level in accordance with signals received from fuel sender gauge (Direct line)
Engine Coolant Temperature Gauge	Indicates engine coolant temperature in accordance with signal from ECM (Direct line)
Volt Gauge	Indicates vehicle voltage according to voltage from IG terminal (Direct line)

WARNING / INDICATOR

Item	Signal Description
TURN SIGNAL	Receives turn signal from flasher relay (Direct line)
BEAM	Receives beam signal from headlight dimmer switch (BEAN)
CHARGE	Receives malfunction signal from generator (Direct line)
MIL	Receives malfunction check signal from ECM (Direct line)
DOOR	Open door indicator illuminates when receiving signal from main body ECU (BEAN)
D BELT	Receives driver seat belt signal (unfastened) from center airbag sensor assembly (BEAN)
BRAKE	Receives parking brake switch signal from main body ECU (Direct line) and fluid level warning signal from brake level switch (Direct line)
OIL PRESSURE	Receives malfunction signal from oil pressure switch (Direct line)
MAINT REQD*1	Blinks when about 4,500 miles driven since oil change. Illuminates when about 5,000 miles driven since oil change.
AIRBAG	Receives malfunction signal from center airbag sensor assembly (Direct line)
ABS	Receives malfunction signal from skid control ECU (Direct line)
P BELT	Blinks when front passenger seat belt switch ON (unfastened)
FUEL	Receives fuel empty signals from fuel sender gauge.
CRUISE*2	Receives malfunction signal from ECM (Direct line)
AUTO LSD*3	Receives signals from hydraulic brake booster while AUTO LSD is operating.
VSC TRAC	Receives malfunction signal from skid control ECU (Direct line)
VSC OFF*4	Receives malfunction signal from skid control ECU (Direct line)
SLIP	Receives malfunction signal from skid control ECU (Direct line)
ABS	Receives malfunction signal from skid control ECU (Direct line)
4WD*5	Receives signals from 4WD control ECU while 4WD is operating.
A-TRAC*5	Receives malfunction signal from skid control ECU (Direct line)
REAR DIFF. LOCK*4	Receives signals from 4WD control ECU while Rear Differential Lock is operating.

*1: U.S.A. only
*2: w/ Cruise Control
*3: for 2WD
*4: w/ Rear Differential Lock
*5: for 4WD

Buzzer

Item	Signal Description
Key Reminder	Buzzer ON when ignition switch OFF, key inserted and driver door open.
Manual Shift Reverse (6MT)	Buzzer ON when ignition switch ON and shift position is reverse.
Seat Belt Warning	Buzzer ON when vehicle speed exceeds 12.4mph (20km/h) and seat belt unfastened.

HOW TO PROCEED WITH TROUBLESHOOTING

HINT:

- Use these procedures to troubleshoot the combination meter.
- Use an intelligent tester in steps 3 and 5.

1 VEHICLE BROUGHT TO WORKSHOP

NEXT

2 INSPECT BATTERY VOLTAGE

Standard voltage:
11 to 14 V

If the voltage is below 11 V, recharge or replace the battery before proceeding.

NEXT

3 PROBLEM SYMPTOMS TABLE

HINT:

Refer to the Problem Symptoms Table (See page ME-15).

Result

Result	Proceed to
Fault is not listed in problem symptoms table	A
Fault is listed in problem symptoms table	B

B → **Go to step 6**

A

4 OVERALL ANALYSIS AND TROUBLESHOOTING

(a) Terminals of ECU (See page ME-17)
(b) On-vehicle Inspection (See page ME-29)

NEXT

5 ADJUST, REPAIR OR REPLACE

NEXT

ME

6	**CONFIRMATION TEST**

NEXT

END

CALIBRATION

1. DESCRIPTION

NOTICE:

Do not place magnetic or metal objects on or near the accessory meter.

HINT:

The procedures described below are for vehicles equipped with an accessory meter.

(a) The location of magnetic north differs depending on the vehicle location. Adjustment of the compass' magnetism is required to correct possible compass deviations from true north.

(b) Compass function calibration is necessary when: 1) purchasing a vehicle; 2) disconnecting and reconnecting the cable of the negative (-) battery terminal; 3) replacing the vehicle battery; 4) driving the vehicle outside the set zone (see the zone map below); or 5) placing magnetic or metal objects near the accessory meter (the direction indication on the display blinks).

2. PERFORM CALIBRATION

CAUTION:

- **Strictly observe posted speed limits, traffic laws and road conditions.**
- **Make sure no people are near the vehicle.**

NOTICE:

- **Perform the circling calibration in a spacious area that does not have artificial magnetic influence. Calibration cannot be performed in underground parking lots, areas under steel towers and areas between tall buildings.**
- **When performing the calibration, do not operate the air conditioner, power windows, or any other electrical system.**
- **The compass may become magnetized during shipping by vessels or freight cars. Be sure to calibrate the compass by correctly performing the procedure described below. If the calibration cannot be completed despite the vehicle being driven in a circle several times, the vehicle's magnetic field may be interfering with the calibration. Demagnetize the vehicle using a demagnetizer and perform calibration again.**

Accessory Meter:

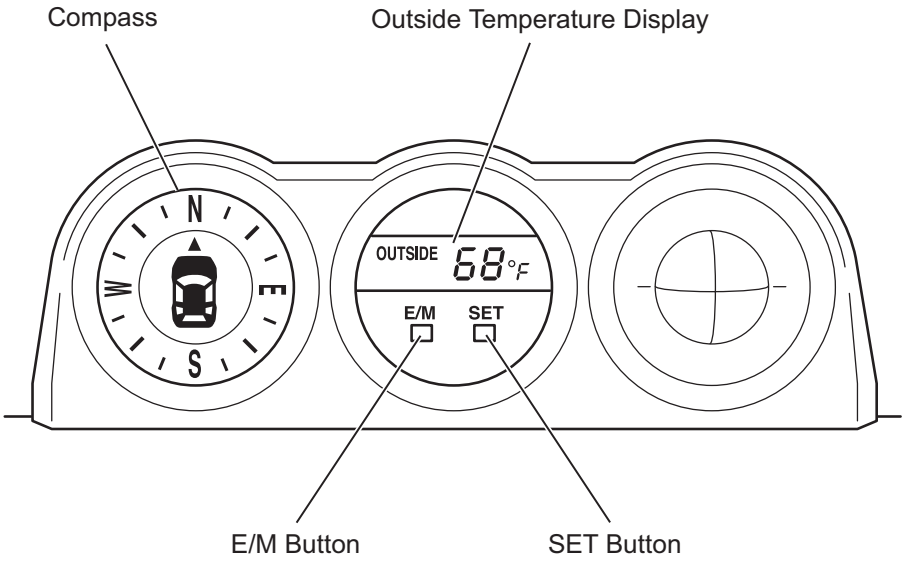

(a) DEVIATION CALIBRATION PROCEDURE:

(1) Turn the ignition switch ON.

HINT:

When the initial circling calibration has not yet been performed, the COMPASS indicator in the outside temperature display blinks.

(2) Switch the mode to compass correction mode by pushing the SET button for about 2 seconds, until the zone number appears in the outside temperature display.

HINT:

If no button operations occur for more than 6 seconds while in compass correction mode, the calibration is cancelled and the display returns to the outside temperature indication. To restart, perform the procedure from the first step again.

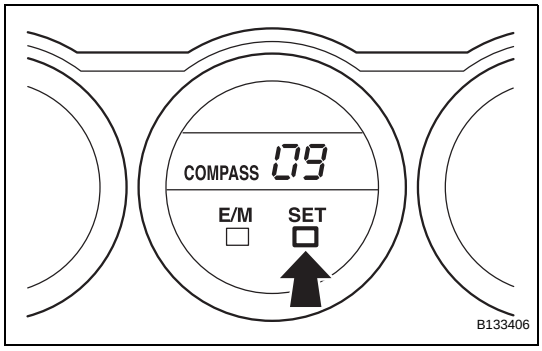

(3) Refer to the following map to determine the vehicle location and select the relevant zone number by pushing the E/M button.

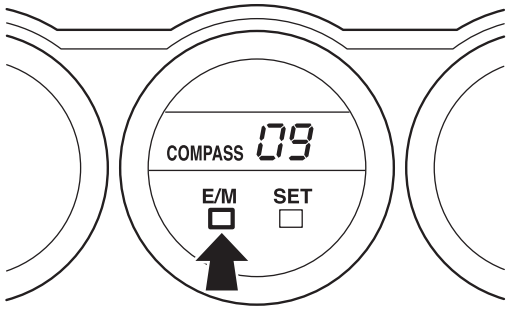

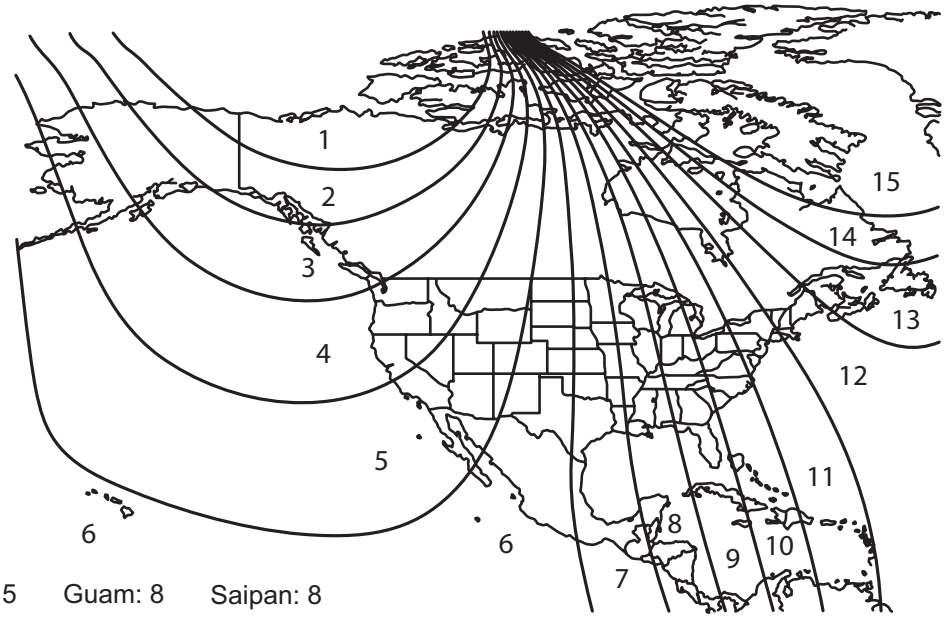

A. Samoa: 5 Guam: 8 Saipan: 8

B145641E01

HINT:
After DEVIATION CALIBRATION, leave the system for 6 seconds or push and hold the SET button for about 2 seconds. The display returns to the outside temperature display.

(b) CIRCLING CALIBRATION PROCEDURE:
(1) Start the engine.
HINT:
When the initial circling calibration has not yet been performed, the COMPASS indicator in the outside temperature display blinks.

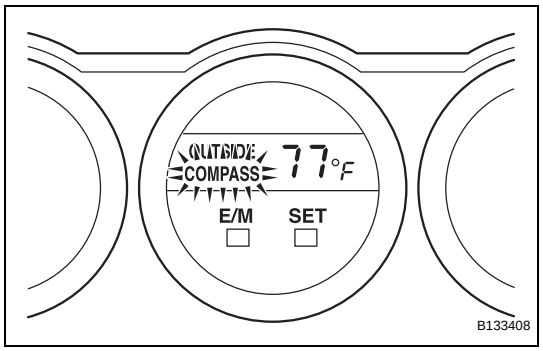

B133408

ME

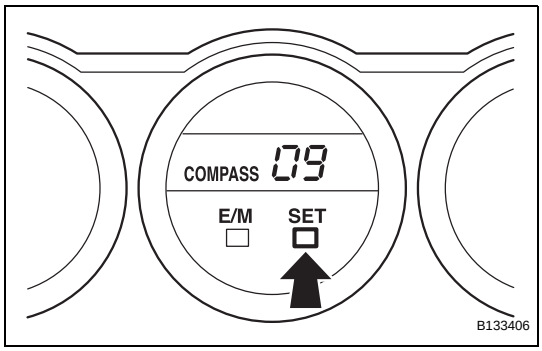

(2) Switch the mode to compass correction mode by pushing the SET button for about 2 seconds, until the zone number appears in the outside temperature display.
HINT:
If no button operations occur for more than 6 seconds while in compass correction mode, calibration is cancelled and the display returns to the outside temperature indication. To restart, perform the procedure from the first step again.

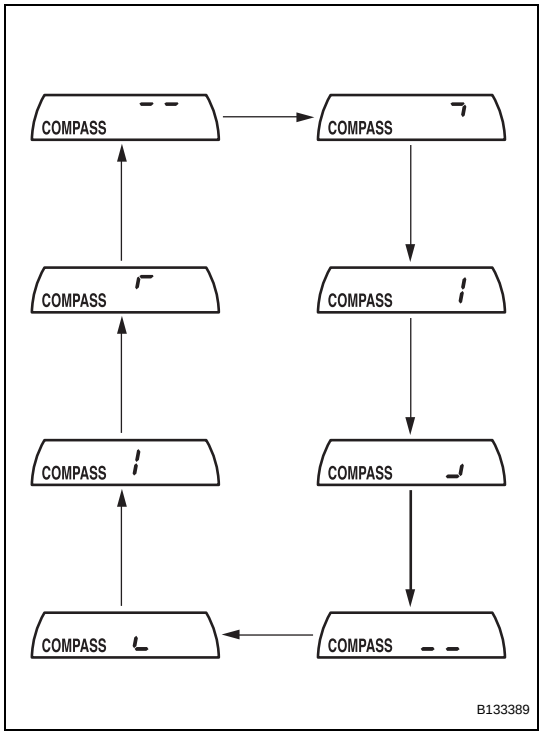

(3) Push the SET button again to change the mode to turn correction mode.
HINT:
While in correction mode, the indication bars move as shown in the illustration.

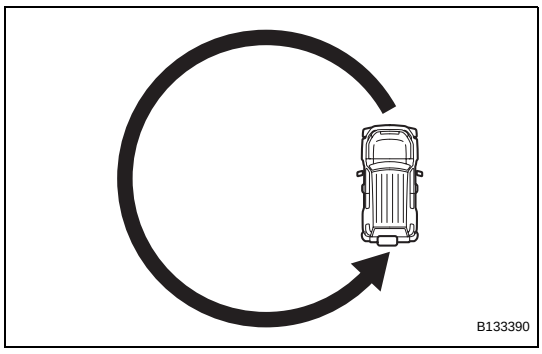

(4) If there is sufficient space to drive the vehicle in a circle, perform the following procedure:
1. Drive the vehicle in a full circle within 2 minutes, at a vehicle speed of 5mph (8km/h) or lower, as shown in the illustration.

NOTICE:

- **Do not perform the circling calibration of the compass in a place where the earth's magnetic field is subject to interference by artificial magnetic fields (underground parking, under a steel tower, between buildings, roof parking, near a crossing, near a large vehicle, etc.).**
- **During the calibration, do not operate any electric systems (power window, etc.) as they may interfere with the calibration.**

ME

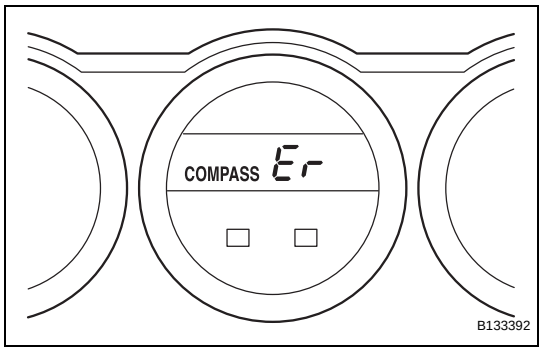

HINT:

- When the compass display returns to the outside temperature display, the calibration is complete.
- When the circling calibration fails, "Er" is displayed for about 2 seconds and then the COMPASS indicator flashes.
- If the correct direction is not displayed after driving the vehicle as specified, change the vehicle location.
- To cancel the calibration before completion, push the SET button for about 2 seconds.

(5) If enough space is not available to drive in a circle, perform the following:

1. Perform a four-point turn within 2 minutes, as shown in the illustration.

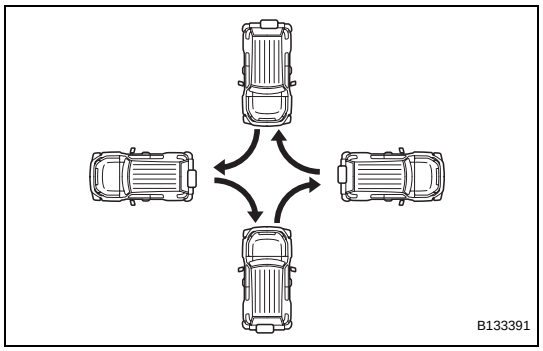

NOTICE:

- **Do not perform the circling calibration of the compass in a place where the earth's magnetic field is subject to interference by artificial magnetic fields (underground parking, under a steel tower, between buildings, roof parking, near a crossing, near a large vehicle, etc.).**
- **During the calibration, do not operate any electric systems (power window, etc.) as they may interfere with the calibration.**

HINT:

- When the compass display returns to the outside temperature display, the calibration is complete.
- When the circling calibration fails, "Er" is displayed for about 2 seconds and then the COMPASS indicator flashes.
- If the correct direction is not displayed after driving the vehicle as specified, change the vehicle location.
- To cancel the calibration before completion, push the SET button for about 2 seconds.

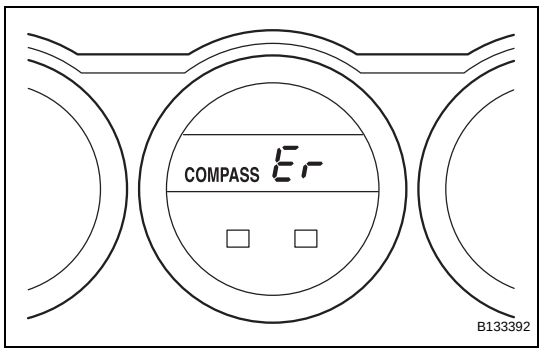

(6) Check that the COMPASS indicator is not blinking and that the compass is displayed normally.

ME

PROBLEM SYMPTOMS TABLE

HINT:
Use the table below to help determine the causes of the problem symptom. The potential causes of the symptoms are listed in order of probability in the "Suspected Area" column of the table. Check each symptom by checking the suspected area in the order they are listed. Replace parts as necessary.

MALFUNCTION SYSTEM

Symptom	Suspected area	See page
Entire combination meter assembly does not operate	Refer to troubleshooting	ME-34
Operating light control rheostat does not change light brightness	Refer to troubleshooting	ME-54

METER GAUGES

Symptom	Suspected area	See page
Speedometer malfunction	Refer to troubleshooting	ME-37
Tachometer malfunction	Refer to troubleshooting	ME-42
Fuel gauge malfunction	Refer to troubleshooting	ME-44
Engine coolant temperature gauge malfunction	Refer to troubleshooting	ME-47

WARNING/INDICATOR LIGHT

Symptom	Suspected area	See page
MIL does not come on	ECM	ES-404
	Wire harness or connector	-
	Combination meter assembly	ME-17
Charge warning light does not come on	Generator (alternator)	CH-13
	ECM	ES-29
	Wire harness or connector	-
	Combination meter assembly	ME-17
Brake warning light does not come on	Brake fluid level warning switch	BC-165
	Parking brake switch assembly	PB-24
	Main body ECU	ME-17
	Wire harness or connector	-
	Combination meter assembly	ME-29
ABS warning light does not come on	Skid Control ECU	BC-154
	Combination meter assembly	ME-29
Airbag waning light does not come on	Center airbag sensor assembly	RS-234
	Combination meter assembly	ME-29
Engine oil pressure warning light does not come on	Engine oil pressure switch assembly	-
	Wire harness or connector	-
	Combination meter assembly	ME-29
Driver side seat belt warning light does not operate	Front seat inner belt assembly LH	SB-32
	Wire harness or connector	-
	Combination meter assembly	ME-29
Turn indicator light does not come on	Turn signal flasher assembly	LI-123
	Wire harness or connector	-
	Combination meter assembly	ME-17
Beam indicator light does not come on	Headlight dimmer switch	LI-104
	Wire harness or connector	-
	Combination meter assembly	ME-17
MAINT REQD indicator light blinks or remains illuminated*1	Resetting procedure	ME-32
	Combination meter assembly	ME-17

ME

Symptom	Suspected area	See page
Open door warning light does not come on	Door courtesy switch	LI-114
	Main body ECU	ME-17
	Wire harness or connector	-
	Combination meter assembly	ME-29
Fuel level warning light does not come on	Wire harness or connector	-
	Combination meter assembly	ME-17
A/T oil temperature warning light does not come on*2	ECM	ES-6
	Wire harness or connector	-
	Combination meter assembly	ME-17
CRUISE indicator light does not come on*3	ECM	ES-6
	Cruise control main switch	CC-7
	Wire harness or connector	-
	Combination meter assembly	ME-17
Rear differential lock indicator light does not come on*4	4WD control ECU	BC-6
	Wire harness or connector	-
	Combination meter assembly	ME-17
4WD indicator light does not come on*5	4WD control ECU	BC-6
	Wire harness or connector	-
	Combination meter assembly	ME-17
SLIP indicator light does not come on	Skid Control ECU	BC-175
	Wire harness or connector	-
	Combination meter assembly	ME-17
VSC OFF indicator light does not come on*4	Skid control ECU	BC-171
	Wire harness or connector	-
	Combination meter assembly	ME-17
VSC TRAC warning light does not come on	Skid control ECU	BC-159
	Wire harness or connector	-
	Combination meter assembly	ME-17
AUTO LSD indicator light does not come on*6	Skid control ECU	BC-180
	Wire harness or connector	-
	Combination meter assembly	ME-17
A-TRAC indicator light does not come on*5	Skid control ECU	BC-185
	Wire harness or connector	-
	Combination meter assembly	ME-17

*1: U.S.A. only
*2: for A/T
*3: w/ cruise control
*4: w/ rear differential lock
*5: for 4WD
*6: for 2WD

BUZZER

Symptom	Suspected area	See page
No buzzers sound	Wire harness or connector	-
	Combination meter assembly	ME-49
Seat belt warning buzzer does not sound	Front seat inner belt assembly	SB-32
	Center airbag sensor assembly	RS-27
	Occupant classification sensor	RS-250
	Wire harness or connector	-
	Combination meter assembly	ME-17

Symptom	Suspected area	See page
Key reminder warning buzzer does not sound	Unlock warning switch assembly	DL-102
	Main body ECU	ME-17
	Wire harness or connector	-
	Combination meter assembly	ME-17
Manual shift reverse warning does not sound*	Combination Meter Assembly	ME-17

*: for M/T

ACCESSORY METER ASSEMBLY

Symptom	Suspected area	See page
Illumination does not come on	Wire harness or connector	-
	Accessory meter assembly	-
Accessory meter does not operate	Wire harness or connector	-
	Accessory meter assembly	-
Ambient temperature does not display	Air conditioning amplifier	AC-5
	Wire harness or connector	-
	Accessory meter assembly	-
Compass does not operate	Accessory meter assembly	-
Clinometer does not operate	Accessory meter assembly	-

TERMINALS OF ECU

1. COMBINATION METER ASSEMBLY

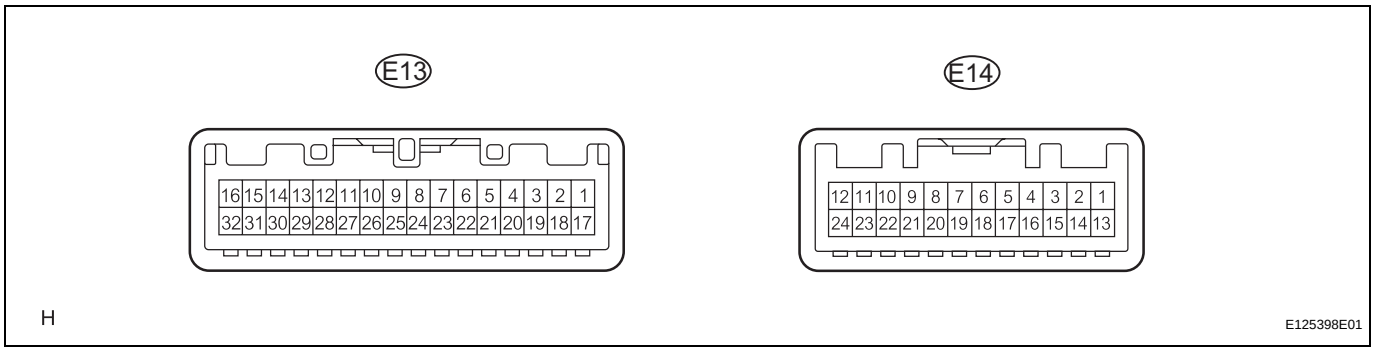

(a) Disconnect the E13 combination meter assembly connector.
(b) Measure the voltage and resistance of the wire harness side connector.

Standard:

Symbols (Terminals No.)	Wiring Color	Terminal Description	Condition	Specified Condition
IG+ (E13-2) - Body ground	R-L - Body ground	Ignition switch signal	Ignition switch OFF → ON	Below 1 V → 11 to 14 V
B (E13-1) - Body ground	R - Body ground	Battery	Always	11 to 14 V
ES (E13-21) - Body ground	W-B - Body ground	Ground	Always	Below 1 Ω

If the result is not as specified, there may be a malfunction in the wire harness.
(c) Disconnect the E14 combination meter assembly connector.
(d) Measure the voltage of the wire harness side connector.

Standard voltage:

Symbols (Terminals No.)	Wiring Color	Terminal Description	Condition	Specified Condition
SE *1 (E13-4) - Body ground	W - Body ground	Vehicle speed signal (Output)	Driving at approx. 12 mph (20 km/h)	Pulse generation (See waveform 2)
E3 (E13-5) - Body ground	Y-B - Body ground	Fuel level signal	Ignition switch ON	11 to 14 V
SW (E13-6) - Body ground	B-Y - Body ground	Airbag signal	Airbag warning light ON → OFF	Below 1 V → 11 to 14 V
WRNP (E13-7) - Body ground	LG - Body ground	Passenger side seat belt warning light signal (Output)	Ignition switch ON Front passenger seat is occupied and its seat belt is unfastened	11 to 14 V → Below 1 V
			Ignition switch ON Front passenger seat is occupied and its seat belt is fastened	Below 1 V
L (E13-8) - Body ground	G-Y - Body ground	Seat belt condition signal (Driver side)	D-BELT indicator light ON	Below 1 V
			D-BELT indicator light OFF	11 to 14 V
KSW (E13-9) - Body ground	V-G - Body ground	Key switch condition signal	Key inserted	Below 1 V
			Key removed	11 to 14 V
PBKL (E13-10) - Body ground	L-R - Body ground	Front seat inner belt signal (Front passenger side)	Ignition switch ON Front seat belt is unfastened or fastened (Front passenger side)	Pulse generation
ILL- (E13-11) - Body ground	BR-W - Body ground	Light control rheostat signal	Ignition switch OFF → ON	Pulse generation (See waveform 1)

ME

Symbols (Terminals No.)	Wiring Color	Terminal Description	Condition	Specified Condition
S (E13-12) - Body ground	B-W - Body ground	Tachometer signal	Idling	Pulse generation (See waveform 2)
SI (E13-13) - Body ground	R-Y*1 - Body ground	Vehicle speed signal (Input)	Driving at approx. 12 mph (20 km/h)	Pulse generation (See waveform 2)
	GR-R*2 - Body ground			
+S (E13-14) - Body ground	V-R - Body ground	Vehicle Speed signal (Input)	Ignition switch ON and wheel turning slowly	Pulse generation (See waveform 2)
TEMP (E13-15) - Body ground	BR-B - Body ground	Engine coolant temperature	Ignition switch ON Engine coolant temperature 90°C(194°F)	Pulse generation (See waveform 3)
L (E13-16) - Body ground	V-W - Body ground	Fuel level signal	Ignition switch ON	11 to 14 V
ESC (E13-17) - Body ground	LG-R - Body ground	ABS signal	ABS warning light ON → OFF	Below 1 V → 11 to 14 V
B (E13-18) - Body ground	P - Body ground	Turn signal RH signal	Ignition switch ON Turn signal RH indicator light OFF → ON → OFF	Below 1 V → 11 to 14 V → Below 1 V
B (E13-20) - Body ground	L-W - Body ground	Turn signal LH signal	Ignition switch ON Turn signal LH indicator light OFF → ON → OFF	Below 1 V → 11 to 14 V → Below 1 V
SW (E13-23) - Body ground	V-Y - Body ground	All door condition signal	All doors open → closed	Below 1 V → 11 to 14 V
+ (E13-26) - Body ground	R-W - Body ground	HEAD light signal	Light control switch OFF → ON	Below 1 V → 11 to 14 V
DOOR (E13-29) - Body ground	W-L - Body ground	Driver side door open	Driver side door open → closed	Below 1 V → 11 to 14 V
PKB (E13-31) - Body ground	B-L - Body ground	Brake fluid level warning light signal	Ignition switch ON Brake fluid level warning light ON → OFF	Below 1 V → 11 to 14 V
PRSW*8 (E14-1) - Body ground	L-Y - Body ground	Rear differential lock signal	Rear differential lock warning light ON → OFF	Below 1 V → 11 to 14 V
SW*4 (E14-2) - Body ground	R-L*3 - Body ground	4WD signal	4WD indicator OFF → ON	Below 1 V → 11 to 14 V
	GR*1 - Body ground			
CHG- (E14-3) - Body ground	GR - Body ground	Change signal	Ignition switch ON → OFF	11 to 14 V → Below 1 V
A/D*6 (E14-4) - Body ground	P-G - Body ground	Cruise signal	Cruise indicator ON → OFF	Below 1 V → 11 to 14 V
TROF*8 (E14-5) - Body ground	L-W - Body ground	VSC OFF signal	VSC OFF indicator ON → OFF	Below 1 V → 11 to 14 V
VSCW (E14-6) - Body ground	Y-R - Body ground	VSC TRAC signal	VSC TRAC indicator ON → OFF	Below 1 V → 11 to 14 V
SLIP (E14-7) - Body ground	R - Body ground	SLIP signal	SLIP warning light ON → OFF	Below 1 V → 11 to 14 V
CHK (E14-8) - Body ground	R-B - Body ground	Check engine warning light signal	Check engine warning light signal ON → OFF	Below 1V→11 to 14 V
ATRA*7 (E14-9) - Body ground	Y-V - Body ground	A-TRAC signal	A-TRAC indicator light ON → OFF	Below 1V→11 to 14 V
ALSD*5 (E14-10) - Body ground	BR-Y - Body ground	AUTO LSD signal	AUTO LSD indicator light ON → OFF	Below 1 V → 11 to 14 V
OILW*2 (E14-11) - Body ground	P - Body ground	A/T oil temperature signal	A/T OIL TEMP warning light ON → OFF	Below 1 V → 11 to 14 V
S (E14-12) - Body ground	LG-B - Body ground	Oil pressure signal	Oil pressure warning light ON → OFF	Below 1 V → 11 to 14 V
ILL+ (E14-13) - Body ground	G - Body ground	Taillight signal	Light control switch OFF → ON	Below 1 V→11 to 14 V
L*2 (E14-14) - Body ground	B-L - Body ground	A/T shift position signal (L)	A/T L indicator OFF → ON	Below 1 V→11 to 14 V
2*2 (E14-15) - Body ground	P-L - Body ground	A/T shift position signal (2)	A/T 2 indicator OFF → ON	Below 1 V→11 to 14 V

Symbols (Terminals No.)	Wiring Color	Terminal Description	Condition	Specified Condition
3*2 (E14-16) - Body ground	W-R - Body ground	A/T shift position signal (3)	A/T 3 indicator OFF → ON	Below 1 V→11 to 14 V
4*2 (E14-17) - Body ground	B-O - Body ground	A/T shift position signal (4)	A/T 4 indicator OFF → ON	Below 1 V→11 to 14 V
D*2 (E14-18) - Body ground	R-G - Body ground	A/T shift position signal (D)	A/T D indicator OFF → ON	Below 1 V→11 to 14 V
N*2 (E14-19) - Body ground	G-W - Body ground	A/T shift position signal (N)	A/T N indicator OFF → ON	Below 1 V→11 to 14 V
R*2 (E14-20) - Body ground	R-Y - Body ground	A/T shift position signal (R)	A/T R indicator OFF → ON	Below 1 V→11 to 14 V
R*1 (E14-20) - Body ground	R-Y - Body ground	M/T shift position signal (R)	M/T shift warning buzzer OFF → ON	Below 1 V→11 to 14 V
P*2 (E14-21) - Body ground	Y-B - Body ground	A/T shift position signal (P)	A/T P indicator OFF → ON	Below 1 V→11 to 14 V
ATP*3 (E14-22) - Body ground	W - Body ground	Transfer indicator switch neutral position signal	A/T P indicator OFF → ON	Below 1 V→11 to 14 V

*1: for M/T
*2: for A/T (2WD and 4WD)
*3: for A/T (4WD only)
*4: for 4WD
*5: for 2WD
*6: w/ cruise control
*7: w/ active traction control (4WD only)
*8: w/ rear differential lock

HINT:
If the result is not as specified, the combination meter assembly may be malfunctioning.

ME

(1) Waveform 1: Using an oscilloscope

Terminal Connections	ILL- (E13-11) - Body Ground
Tool Setting	5V / DIV, 50 ms / DIV
Condition	Ignition switch ON

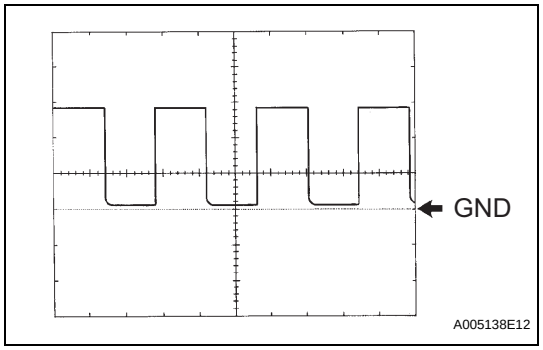

(2) Waveform 2: Using an oscilloscope

Terminal Connections	SE (E13-4) - Body Ground S (E13-12) - Body Ground SI (E13-13) - Body Ground +S (E13-14) - Body Ground
Tool Setting	5V / DIV, 20ms / DIV
Condition	Driving at approximately 12mph (20km/h)

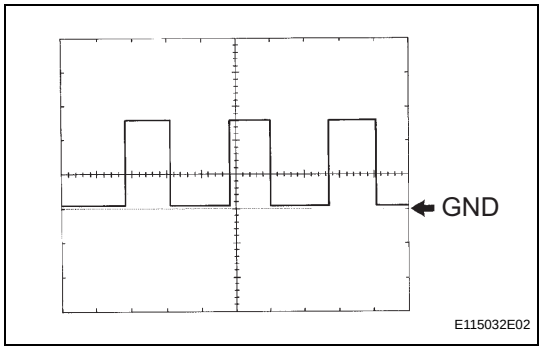

HINT:
As the vehicle speed increases, the cycle of the signal waveform narrows.

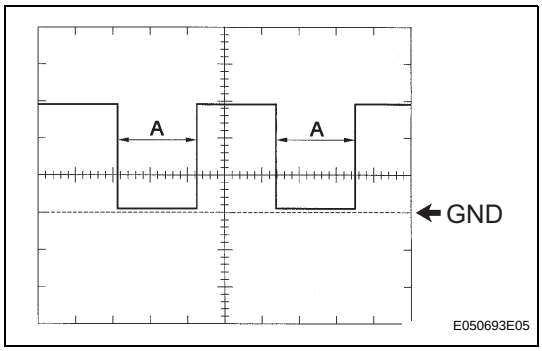

(e) Waveform 3: Using an oscilloscope

Tool setting	5 V/DIV., 0.1 sec./DIV
Vehicle condition	Ignition switch ON

HINT:
A changes in accordance with the engine coolant temperature.

Coolant temperature	Below 30°	Approximately 75°C	Above 90°
A	Approximately 16 ms	Approximately 204 ms	Approximately 262 ms

2. ACCESSORY METER ASSEMBLY

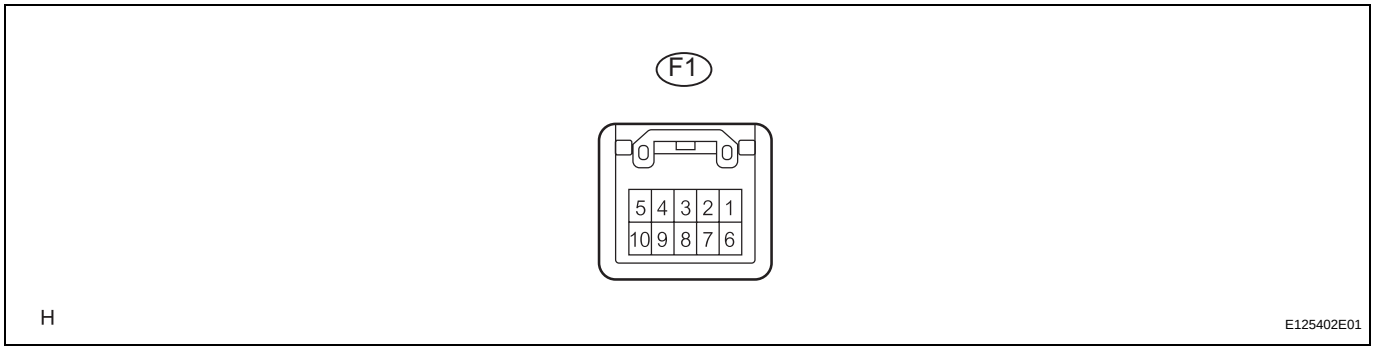

(a) Disconnect the F1 accessory meter assembly connector.
(b) Measure the voltage and resistance of the wire harness side connector.

Standard:

Symbols (Terminals No.)	Wiring Color	Terminal Description	Condition	Specified Condition
+B (F1-1) - Body ground	R - Body ground	Battery	Always	11 to 14 V
ACC (F1-2) - Body ground	GR - Body ground	ACC	Ignition switch OFF → ACC	Below 1 V → 11 to 14 V
IG+ (F1-3) - Body ground	Y-R - Body ground	Ignition switch signal	Ignition switch OFF → ON	Below 1 V → 11 to 14 V
DMIN (F1-4) - Body ground	R-L - Body ground	Air conditioning amplifier signal	Ignition switch OFF → ON	Below 1 V → 11 to 14 V
ILL+ (F1-6) - Body ground	G - Body ground	Taillight signal	Light control switch OFF → ON	Below 1 V → 11 to 14 V
ILL- (F1-7) - Body ground	BR-W - Body ground	Light control rheostat signal	Ignition switch OFF → ON	Pulse generation (See waveform 1)
SI (F1-8) - Body ground	V-R - Body ground	Combination meter signal	Driving at approx. 3.1 mph (5 km/h)	1 V → 9 V → 1 V
E (F1-9) - Body ground	W-B - Body ground	Ground	Always	Below 1 Ω

HINT:
If the result is not as specified, the accessory meter assembly may be malfunctioning.

ME

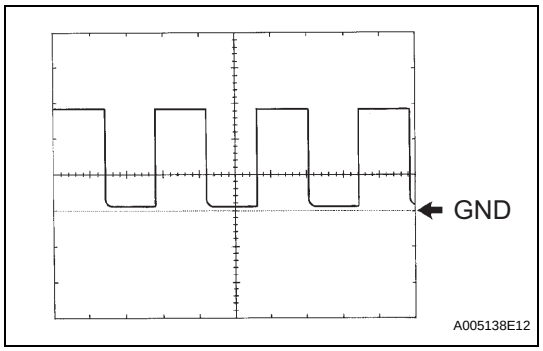

(1) Waveform 1: Using an oscilloscope

Terminal Connections	ILL- (F1-7) -Body Ground
Tool Setting	5V / DIV, 50 ms / DIV
Condition	Ignition switch ON

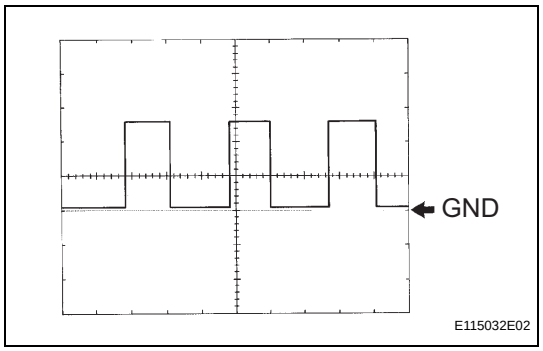

(2) Waveform 2: Using an oscilloscope

Terminal Connections	SI (F1-8) - Body Ground
Tool Setting	5V / DIV, 20 ms / DIV
Condition	Driving at approx. 3.1 mph (5 km/h)

3. CHECK MAIN BODY ECU

Main Body ECU:

Left View:

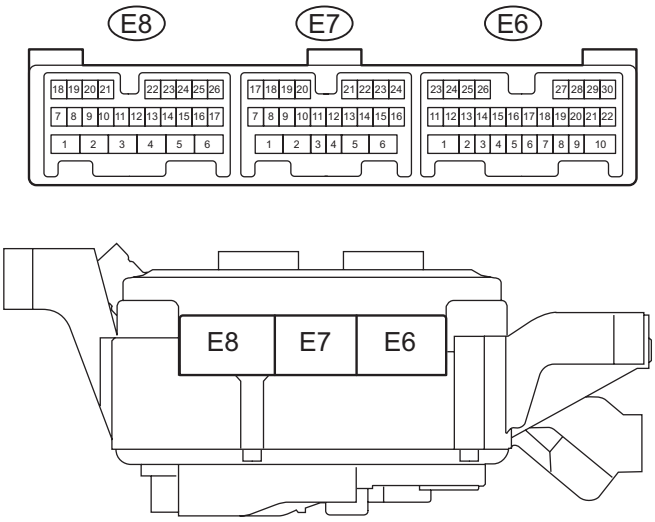

Rear View:

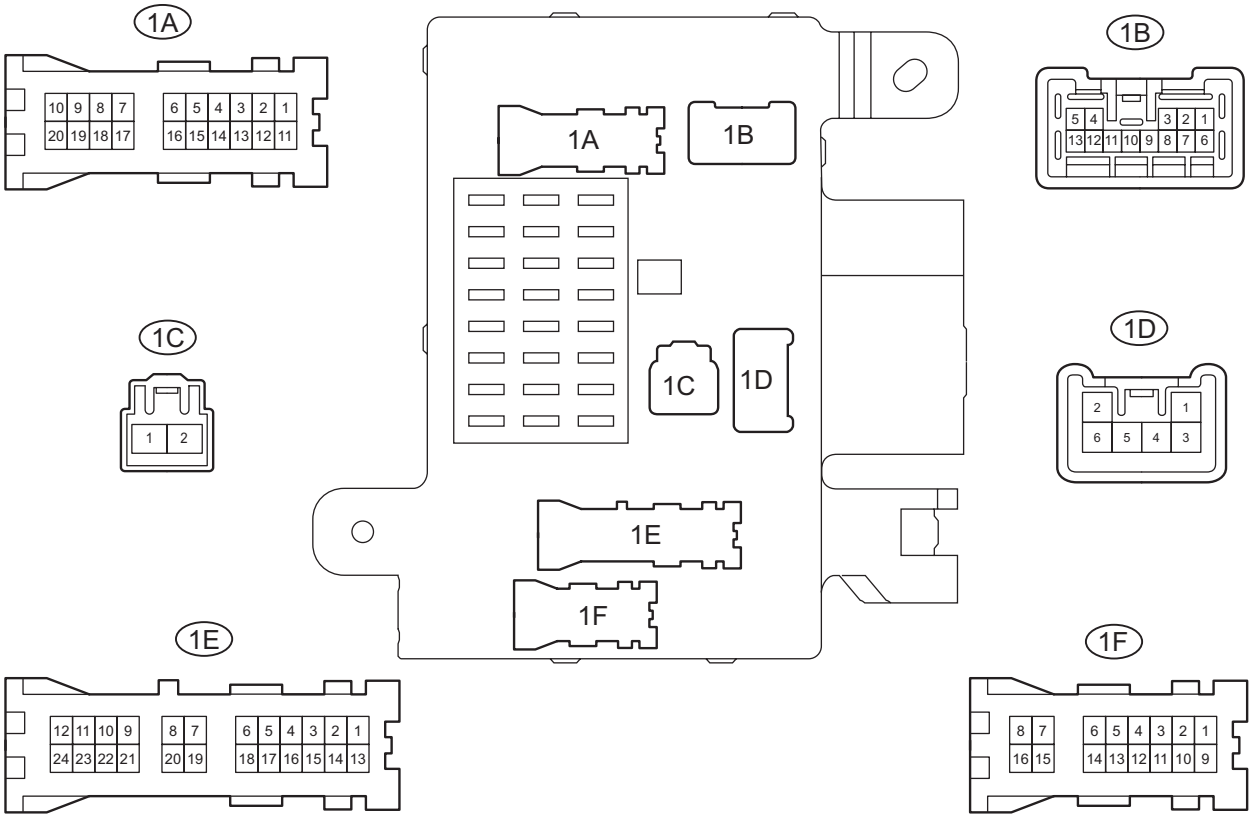

Y

B136051E01

(a) Disconnect the E7, E8 and 1A main body ECU connectors.

(b) Measure the voltage of the wire harness side connectors.

Standard voltage

Symbols (Terminals No.)	Wiring Color	Terminal Description	Condition	Specified Condition
PKB (E7-2) - Body ground	W-R* - Body ground	Parking brake signal	Parking brake warning light ON → OFF	Below 1 V → 11 to 14 V
BCTY (E7-7) - Body ground	W - Body ground	Back door courtesy switch and back window courtesy switch input	Back door CLOSED → OPEN	11 to 14 V → Below 1 V
RLCY (E7-11) - Body ground	P-B - Body ground	Rear door courtesy switch signal (LH)	Rear door (Driver side) CLOSED → OPEN	11 to 14 V → Below 1 V
RRCY (E7-12) - Body ground	P-L - Body ground	Rear door courtesy switch signal (RH)	Rear door (Front passenger side) CLOSED → OPEN	11 to 14 V → Below 1 V
DCTY (E7-23) - Body ground	R-B - Body ground	Front door courtesy switch signal (Driver side)	Driver door CLOSED → OPEN	11 to 14 V → Below 1 V
PCTY (E7-24) - Body ground	G-Y - Body ground	Front door courtesy switch signal (Passenger side)	Front passenger door CLOSED → OPEN	11 to 14 V → Below 1 V
KSW (E8-14) - Body ground	G-Y - Body ground	Key unlock switch condition signal	Key inserted → Removed	Below 1 V → 11 to 14 V
GND2 (1H-2) - Body ground)	W - Body ground	Ground	Always	Below 1 V

*: w/ daytime running light

HINT:

If the result is not as specified, there may be a malfunction in the wire harness.

4. COMBINATION METER INTERNAL CIRCUIT

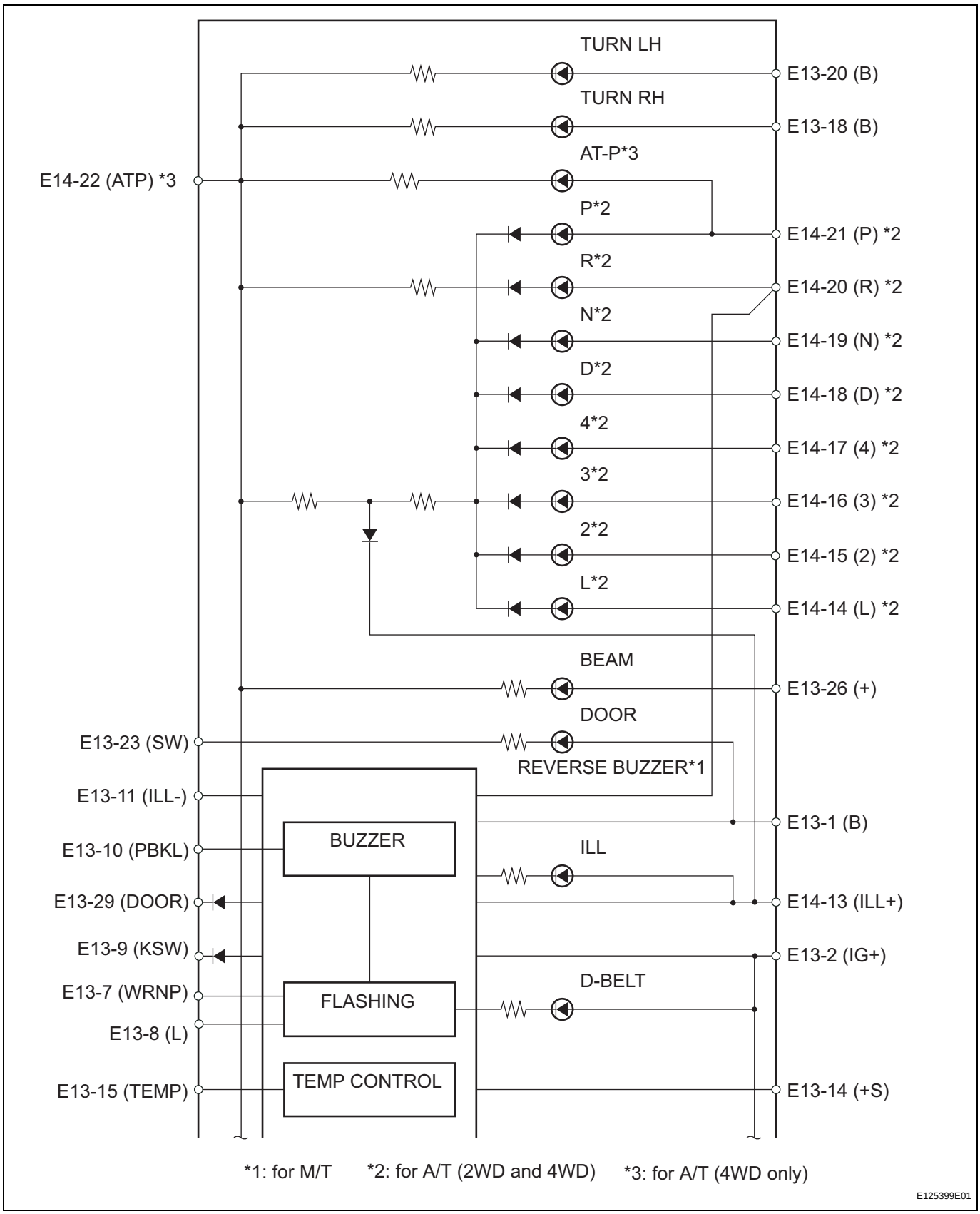

ME

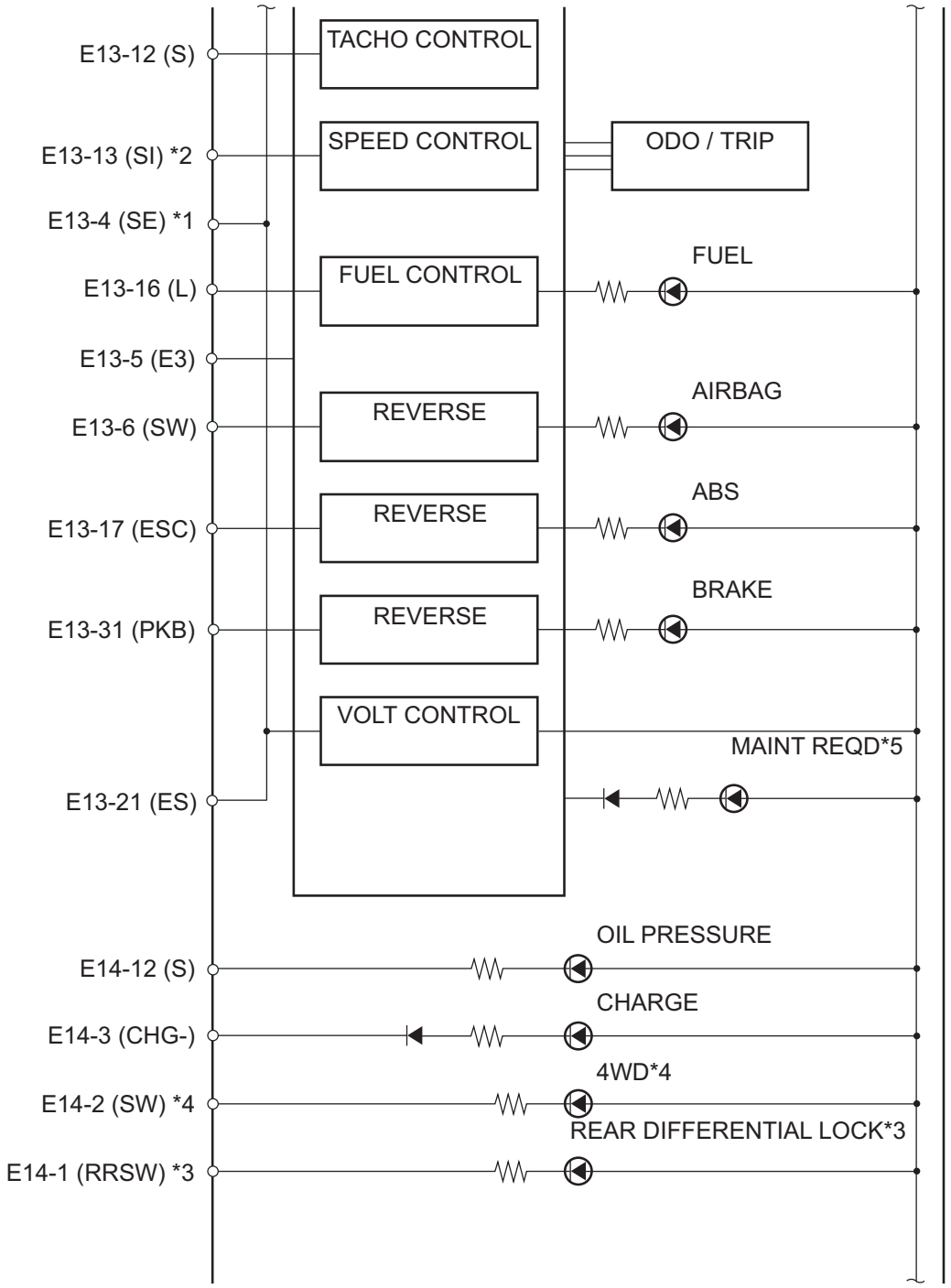

*1: for M/T

*2: for A/T (2WD and 4WD)

*3: w/ Rear Differential Lock

*4: for 4WD

*5: U.S.A. only

E125400E01

ME

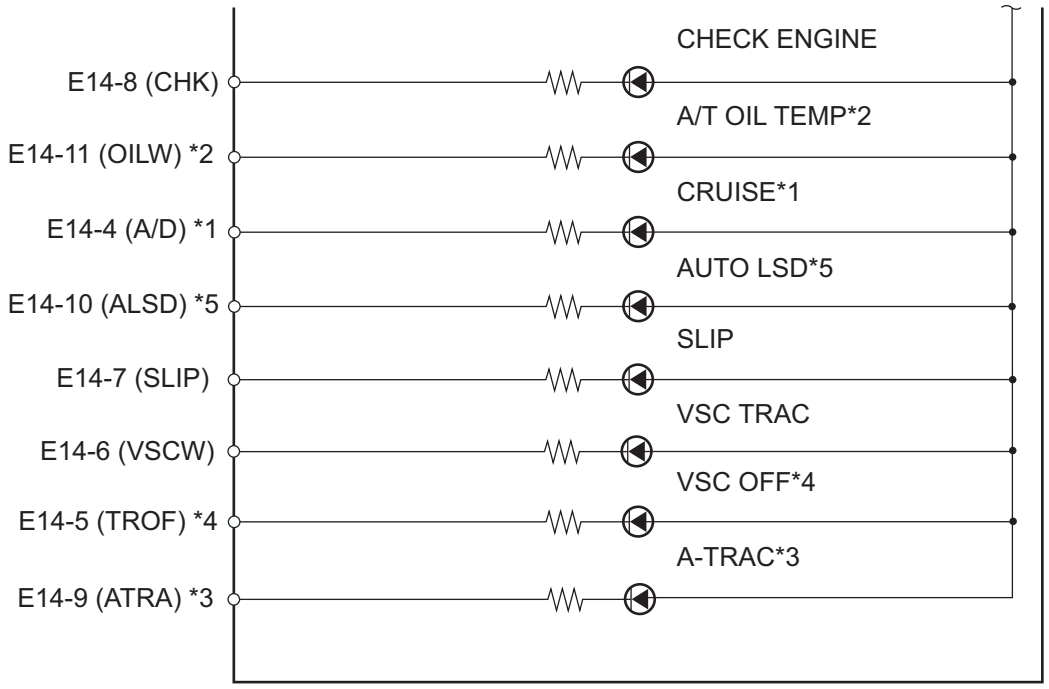

*1: w/ Cruise Control

*2: for A/T (2WD and 4WD)

*3: w/ Active Traction Control (4WD only)

*4: w/ Rear Differential Lock

*5: for 2WD

E125401E01

ME

Connectors

Terminal No.		Wire Harness Side
E13	1	Battery
	2	Ignition Switch
	4	Speed Sensor *1
	5	Fuel Suction Pump and Gauge Assembly
	6	Center Airbag Sensor Assembly
	7	Passenger Seat Belt Warning Light
	8	Driver Seat Buckle Switch
	9	Key Unlock Warning Switch
	10	Center Airbag Sensor Assembly
	11	Light Control Rheostat
	12	Air Conditioning Amplifier
	13	Speed Sensor *1
		Skid Control ECU *2
	14	4P-OUT (Other Parts)
	15	ECM
	16	Fuel Suction Pump and Gauge Assembly
	17	Skid Control ECU
	18	Turn Signal Flasher Assembly
	20	Turn Signal Flasher Assembly
	21	Body Ground
	23	Main Body ECU
	26	Main Body ECU *3
		Headlight Relay *4
	29	Main Body ECU
	31	Skid Control ECU
E14	1	Rear Differential Lock Switch *8
	2	4WD Control ECU *1
		Transfer Indicator Switch *2
	3	Generator (Alternator)
	4	ECM *6
	5	Skid Control ECU *8
	6	Skid Control ECU
	7	Skid Control ECU
	8	ECM
	9	Skid Control ECU *7
	10	Skid Control ECU *5
	11	ECM *2
	12	Engine Oil Pressure Switch
	13	TAIL Fuse
	14	Transmission Control Switch *2
	15	Transmission Control Switch *2
	16	Transmission Control Switch *2
	17	Transmission Control Switch *2
	18	Transmission Control Switch *2
	19	Transmission Control Switch *2
	20	Back up Light Switch *1
	21	Park/Neutral Position Switch *2
	22	Transfer Indicator Switch (Neutral Position) *3

*1: for M/T
*2: for A/T
*3: w/ Daytime Running Light
*4: w/o Daytime Running Light
*5: for 2WD
*6: w/ Cruise Control
*7: w/ Active Traction Control (4WD only)
*8: w/ Rear Differential Lock

DATA LIST / ACTIVE TEST

1. DATA LIST

By reading the DATA LIST displayed on the intelligent tester, you can check values, including those of the switches, sensors, actuators without removing any parts. Reading the DATA LIST as the first step of troubleshooting is one method of shortening diagnostic time.

(a) Warm up the engine.
(b) Turn the ignition switch OFF.
(c) Connect the intelligent tester to the DLC3.
(d) Turn the ignition switch to the ON position.
(e) Operate the intelligent tester according to the display on the tester screen and select DATA LIST.

ECM:

Item	Measurement Item: Range (Display)	Normal Condition	Diagnostic Note
Vehicle SPD	Vehicle speed: Minimum: 0 mph (0km/h), Maximum: 153 mph (255 km/h)	Approximately equal to actual vehicle speed (When driving)	-
Engine SPD	Engine speed: Minimum: 0 rpm, Maximum: 16,383 rpm	Approximately equal to actual engine speed (With engine running)	-
Coolant Temp.	Coolant temperature: Minimum: -40°C (-40°F), Maximum: 140°C (284°F)	After warming up: 80° to 95 °C (176°F to 203°F)	If value -40°C (-40°F) or 140°C (284°F), sensor circuit open or shorted.

ON-VEHICLE INSPECTION

1. INSPECT SPEEDOMETER

(a) Check the operation.

(1) Using a speedometer tester, inspect the speedometer and confirm that the speedometer readings are within the acceptable range. Also check the odometer operation.

Reference:

km/h (Canada)

Standard Indication	Acceptable Range
20 km/h	17.5 to 21.5 km/h
40 km/h	38 to 42 km/h
60 km/h	58 to 63 km/h
80 km/h	78 to 84 km/h
100 km/h	98.5 to 104.5 km/h
120 km/h	119 to 125 km/h
140 km/h	139 to 146 km/h
160 km/h	159 to 167 km/h
180 km/h	179 to 188 km/h
200 km/h	199 to 209 km/h

mph (U.S.A.)

Standard Indication	Acceptable Range
20 mph	19 to 22 mph
40 mph	39 to 42.5 mph
60 mph	59.5 to 63.5 mph
80 mph	79.5 to 84 mph
100 mph	100 to 105 mph
120 mph	121 to 126.5 mph

NOTICE:

Tire wear and excessively high or low tire pressure affect speedometer indications.

(2) Check the deflection of the speedometer indicator.

Reference:

Below 0.3 mph (0.5 km/h)

ME

Combination Meter Assembly Connector:

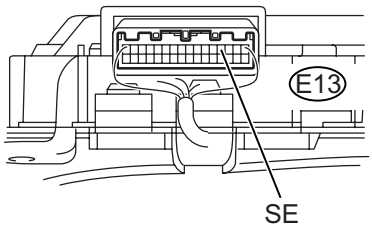

Waveform:

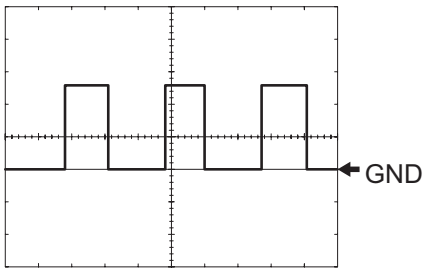

E125403E01

2. INSPECT SPEED SENSOR

(a) Check the output signal waveform.

(1) Remove the combination meter assembly, but do not disconnect the connector.

(2) Connect an oscilloscope to terminal E13-4 and to the body ground.

(3) Start the engine.

(4) Check the signal waveform according to the conditions in the table below.

Item	Contents
Terminal Connection	SE (E13-4) and Body Ground
Tool Setting	5V / DIV, 20ms / DIV
Condition	Driving at approximately 12mph (20km / h)

OK:

As shown in the illustration.

NOTICE:

As the vehicle speed increases, the cycle of the signal waveform narrows.

(5) Reinstall the combination meter assembly.

3. INSPECT TACHOMETER

(a) Check the operation.

(1) Connect the tune-up test tachometer and start the engine.

NOTICE:

- **Reversing the connection of the tachometer will damage the transistors and the insides of the diodes.**
- **When removing or installing the tachometer, be careful not to drop or strike it.**

(2) Compare the result of the test with the standard indication.

DC 13.5 V, at 25°C (77°F)

Reference

Standard Indication (USA) (RPM) Standard Indication (CANADA) (r/min) Data in ( ) are for reference	Acceptable Range (USA) (RPM) Acceptable Range (CANADA) (r/min) Data in ( ) are for reference
700	630 to 770
1,000	(900 to 1,100)
2,000	(1,850 to 2,150)
3,000	2,800 to 3,200
4,000	(3,800 to 4,200)
5,000	4,800 to 5,100
(6,000)	(5,750 to 6,250)

ME

Wire Harness Side:

Fuel Sender Gauge Connector

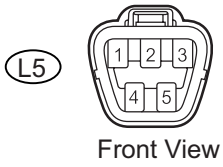

Front View

E126857E01

4. INSPECT FUEL RECEIVER GAUGE

(a) Disconnect the L5 fuel sender gauge connector.

(b) Check the fuel receiver gauge operation when the ignition switch is turned to the ON position.

OK:

Needle position is on EMPTY.

(c) Connect terminals 2 and 3 on the wire harness side connector of the fuel sender gauge.

(d) Check the fuel receiver gauge operation when the ignition switch is turned from OFF to ON.

OK:

Needle position is on FULL.

(e) Reconnect the fuel sender gauge connector.

5. INSPECT FUEL LEVEL WARNING LIGHT

(a) Disconnect the fuel sender gauge connector.

(b) Turn the ignition switch to the ON position, then check that the fuel level needle indicates EMPTY and the fuel level warning light comes on.

OK:

Fuel level warning light comes on.

(c) Reconnect the fuel sender gauge connector.

6. INSPECT ENGINE OIL PRESSURE WARNING LIGHT

(a) Disconnect the engine oil pressure switch connector.

(b) Turn the ignition switch to the ON position.

(c) Ground the terminal of the wire harness side connector, then check the engine oil pressure warning light.

OK:

Engine oil pressure warning light illuminates.

(d) Reconnect the engine oil pressure switch connector.

7. INSPECT BRAKE WARNING LIGHT

(a) Inspect the parking brake warning light.

(1) Disconnect the parking brake switch connector.

(2) Turn the ignition switch to the ON position.

(3) Ground the terminal of the wire harness side connector, then check the parking brake warning light.

OK:

Brake warning light illuminates.

(4) Reconnect the parking brake switch connector.

(b) Inspect the brake fluid level warning light.

(1) Disconnect the brake fluid level warning switch connector.

(2) Turn the ignition switch to the ON position.

(3) Connect a terminal to the other terminal of the wire harness side connector, then check the brake fluid level warning switch.

OK:

Brake warning light illuminates.

(4) Reconnect the brake fluid level warning switch connector.

8. INSPECT BRAKE FLUID LEVEL WARNING SWITCH

(a) Remove the reservoir tank cap and strainer.
(b) Disconnect the brake fluid level warning switch connector.
(c) Measure the resistance between the terminals.
Standard resistance:
Float inside reservoir tank is in high position (switch OFF): 10 k Ω or higher
(d) Use a syphon or a similar tool to drain fluid out of the reservoir tank.
(e) Measure the resistance between the terminals.
Standard resistance:
Float inside reservoir tank is in low position (switch ON): Below 1 Ω
(f) Pour the fluid back into the reservoir tank.
(g) Reconnect the brake fluid level warning switch connector.
(h) Reinstall the reservoir tank cap and strainer.

9. OIL MAINTENANCE INDICATOR RESETTING PROCEDURE (U.S.A. only)

Oil Maintenance Indicator	Condition	Specified State
Blinks	Vehicle has run 4,500 miles since previous setting	Indicator blinks for 15 seconds after ignition switch is turned ON (including 3 seconds for valve check)
Illuminates	Vehicle has run 5,000 miles since previous setting	Indicator illuminates after ignition switch is turned ON.

(a) Set the window display located inside the combination meter to the Trip A indication.
(b) Turn the ignition switch OFF.
(c) While pressing the ODO/TRIP display change switch (reset switch) (for at least 5 seconds), turn the ignition switch ON.
(d) When the reset procedure has been completed successfully, the MAINT REQD indicator light turns off and the ODO/TRIP meter indicates 0 (zero) and then returns to its regular display.
HINT:
If the reset fails, the MAINT REQD indicator light remains illuminated. Perform the procedure again.

Entire Combination Meter does not Operate

DESCRIPTION

This circuit provides power to the combination meter assembly.

WIRING DIAGRAM

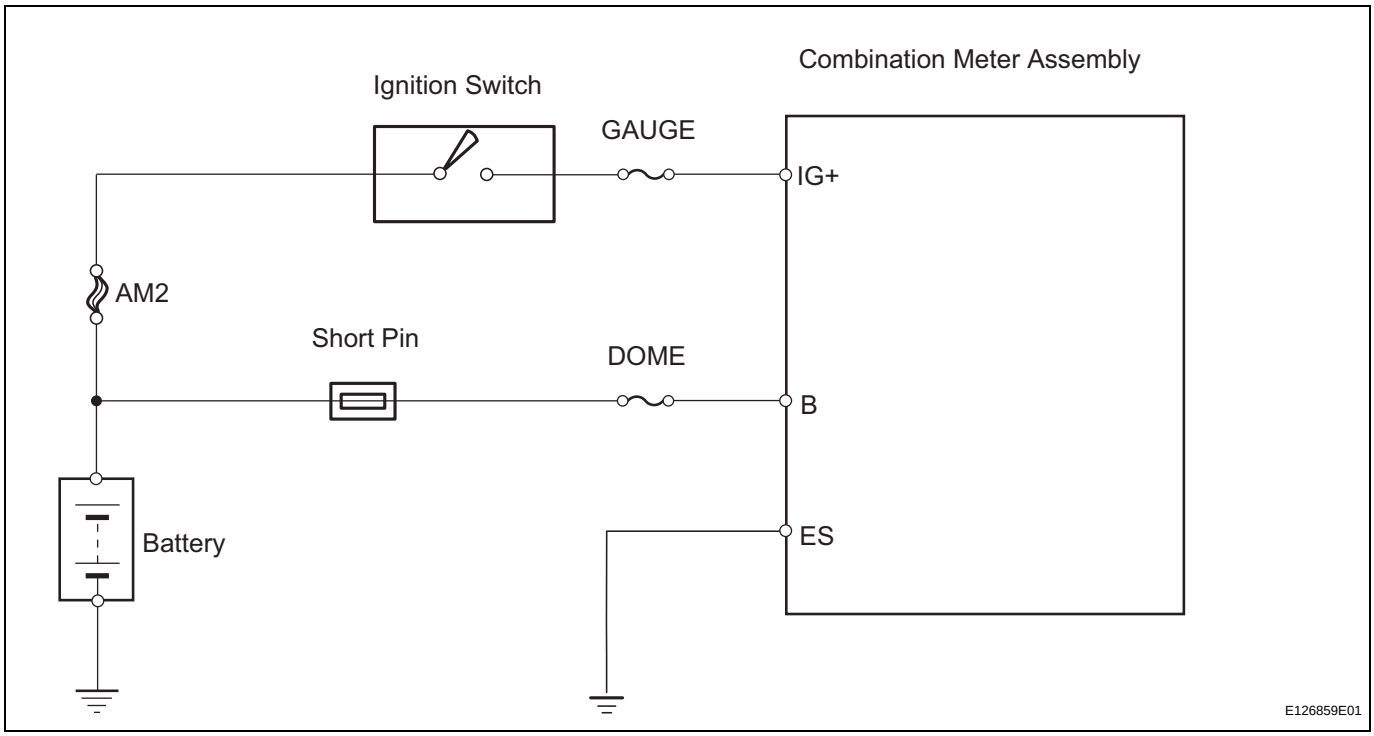

INSPECTION PROCEDURE

1 CHECK FUSE (DOME, GAUGE)

Engine Room R/B No.2:

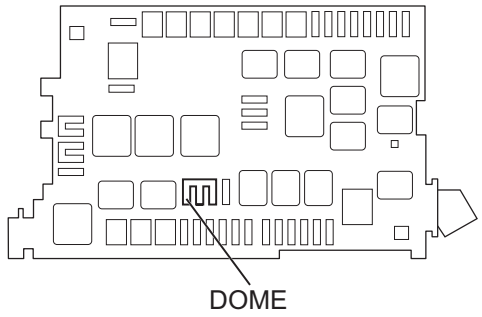

Main Body ECU:

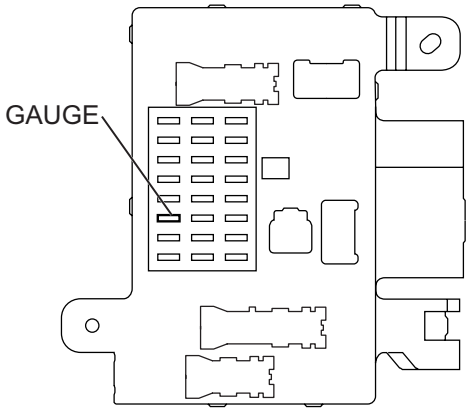

E126883E01

(a) Remove the DOME fuse from engine room relay block No. 2.
(b) Remove the GAUGE fuse from the main body ECU.
(c) Measure the resistance.
Standard Resistance:
Below 1Ω
(d) Reinstall the fuse.

NG → **CHECK SHORT CIRCUIT IN COMPONENTS AND WIRES CONNECTED TO FUSE**

OK

2 INSPECT COMBINATION METER ASSEMBLY

Wire Harness Side:

Combination Meter Assembly Connector

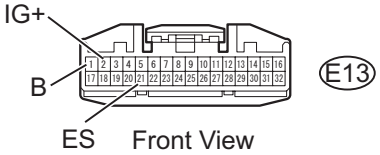

E126858E01

(a) Disconnect the E13 combination meter connector.
(b) Measure the resistance.
Standard resistance

Terminal No.	Condition	Specified Condition
E13-21 (ES) - Body ground	Always	Below 1 Ω

(c) Measure the voltage.
Standard voltage

Terminal No.	Condition	Specified Condition
E13-2 (IG+) - Body ground	Ignition switch ON	11 to 14V

ME

Terminal No.	Condition	Specified Condition
E13-1 (B) - Body ground	Always	11 to 14V

(d) Reconnect the combination meter connector.

NG → **REPAIR OR REPLACE HARNESS AND CONNECTOR**

OK

REPLACE COMBINATION METER ASSEMBLY

Speedometer Malfunction

DESCRIPTION

The combination meter assembly controls the speedometer in accordance with vehicle speed signals from the speed sensor or skid control ECU.

WIRING DIAGRAM

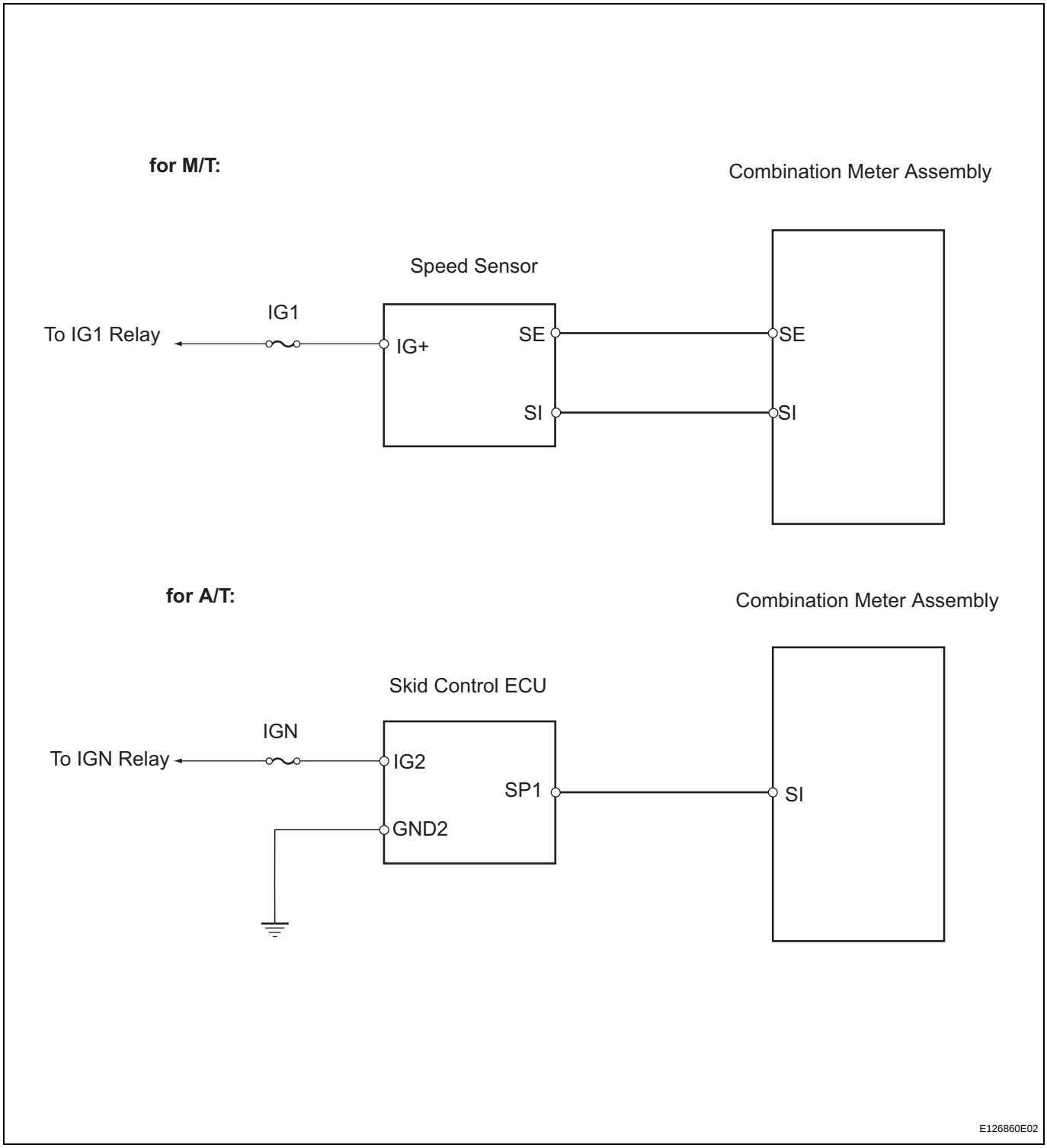

INSPECTION PROCEDURE

1	INSPECT COMBINATION METER ASSEMBLY

Combination Meter Assembly Connector:

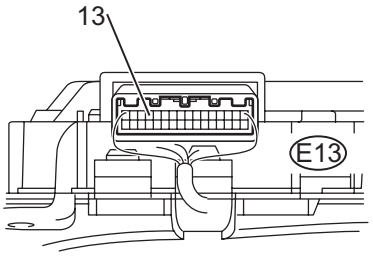

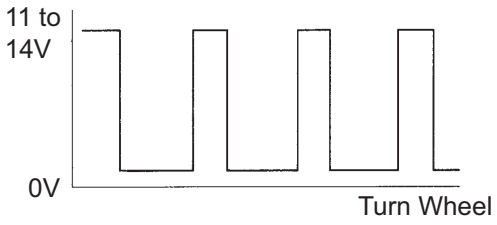

E126867E01

(a) Shift the shift lever (M/T) or transmission gear selector lever (A/T) to the neutral position.
(b) Jack up the vehicle.
(c) Turn the ignition switch to ON.
(d) Check the voltage while turning the wheel slowly.

Standard

Tester Connection	Specified Condition
E13-13 (SI) - Body ground	Voltage generated intermittently

HINT:
The output voltage should fluctuate up and down as shown in the diagram on the left when the wheel is turning slowly.

OK → **REPLACE COMBINATION METER ASSEMBLY**

ME

NG

2	CHECK TRANSAXLE TYPE

(a) Check the vehicle's transaxle type.

Result

Transaxle Type	Proceed to
M/T	A
A/T	B

B → **Go to step 5**

A

3	INSPECT SPEED SENSOR

Component Side:

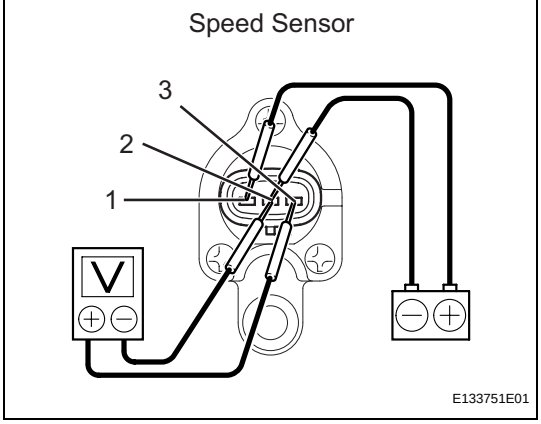

(a) Remove the speed sensor.
(b) Connect the positive (+) lead from the battery to terminal 1 and the negative(-) lead to terminal 2.
(c) Connect the positive (+) lead from the tester to terminal 3 and the negative (-) lead to terminal 2.
(d) Rotate the shaft.
(e) Check that the voltage output between terminals 2 and 3 varies between 0V and 11V.
(f) Reinstall the speed sensor.

NG → **REPLACE SPEED SENSOR**

OK

4	CHECK HARNESS AND CONNECTOR (SPEED SENSOR - COMBINATION METER ASSEMBLY)

Wire Harness Side:

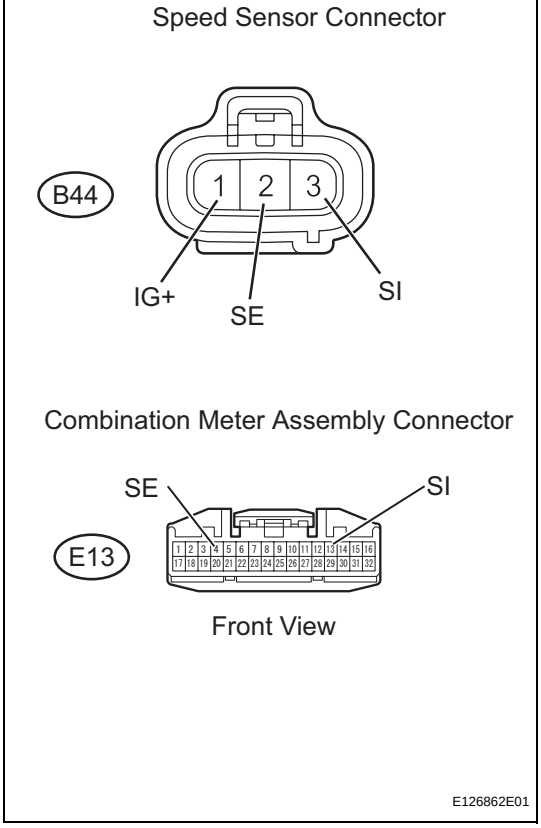

(a) Disconnect the E13 combination meter assembly connector.
(b) Disconnect the B44 speed sensor connector.
(c) Measure the resistance
Standard resistance

Tester Connection	Specified Condition
E13-13 (SI) - B44-3 (SI)	Below 1 Ω
B44-2 (SE) - E13-4 (SE)	Below 1 Ω

(d) Reconnect the combination meter assembly connector.
(e) Measure the voltage
Standard voltage

Tester Connection	Condition	Specified Condition
B44-1 (IG+) - Body ground	Ignition switch ON	11 to 14V

(f) Reconnect the speed sensor connector.

NG → **REPAIR OR REPLACE HARNESS OR CONNECTOR**

ME

OK

REPLACE COMBINATION METER ASSEMBLY

5	READ VALUE OF INTELLIGENT TESTER (SPEED METER)

(a) Connect the intelligent tester to the DLC3.
(b) Turn the ignition switch ON and the tester ON.
(c) Select the item below from the Data List, and read the value displayed on the intelligent tester.

METER

Item	Measurement Item / Range(Display)	Normal Condition	Diagnostic Note
SPEED METER	Vehicle speed / Min.: 0 mph (0 km/h), Max.: 158mph (255 km/h)	Approximately same as actual vehicle speed (When vehicle is driven)	-

OK:
Vehicle speed displayed on the tester is approximately the same as the actual vehicle speed.

NG → **GO TO BRAKE SYSTEM**

OK

ME

6	CHECK HARNESS AND CONNECTOR (SKID CONTROL ECU - COMBINATION METER ASSEMBLY)

(a) Disconnect the E13 combination meter assembly connector.
(b) Disconnect the A4 skid control ECU connector.

Wire Harness Side:

Skid Control ECU Connector

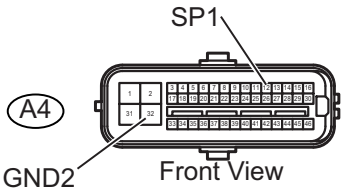

Combination Meter Assembly Connector

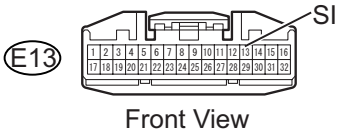

E126869E01

(c) Measure the resistance.
Standard resistance

Tester Connection	Specified Condition
E13-E13 (SI) - A4-12 (SP1)	Below 1 Ω
A4-32 (GND2) - Body ground	Below 1 Ω

NG → **REPAIR OR REPLACE HARNESS OR CONNECTOR**

OK

REPLACE COMBINATION METER ASSEMBLY

ME

Tachometer Malfunction

DESCRIPTION

The combination meter assembly controls the tachometer in accordance with engine speed signals from the ECM.

WIRING DIAGRAM

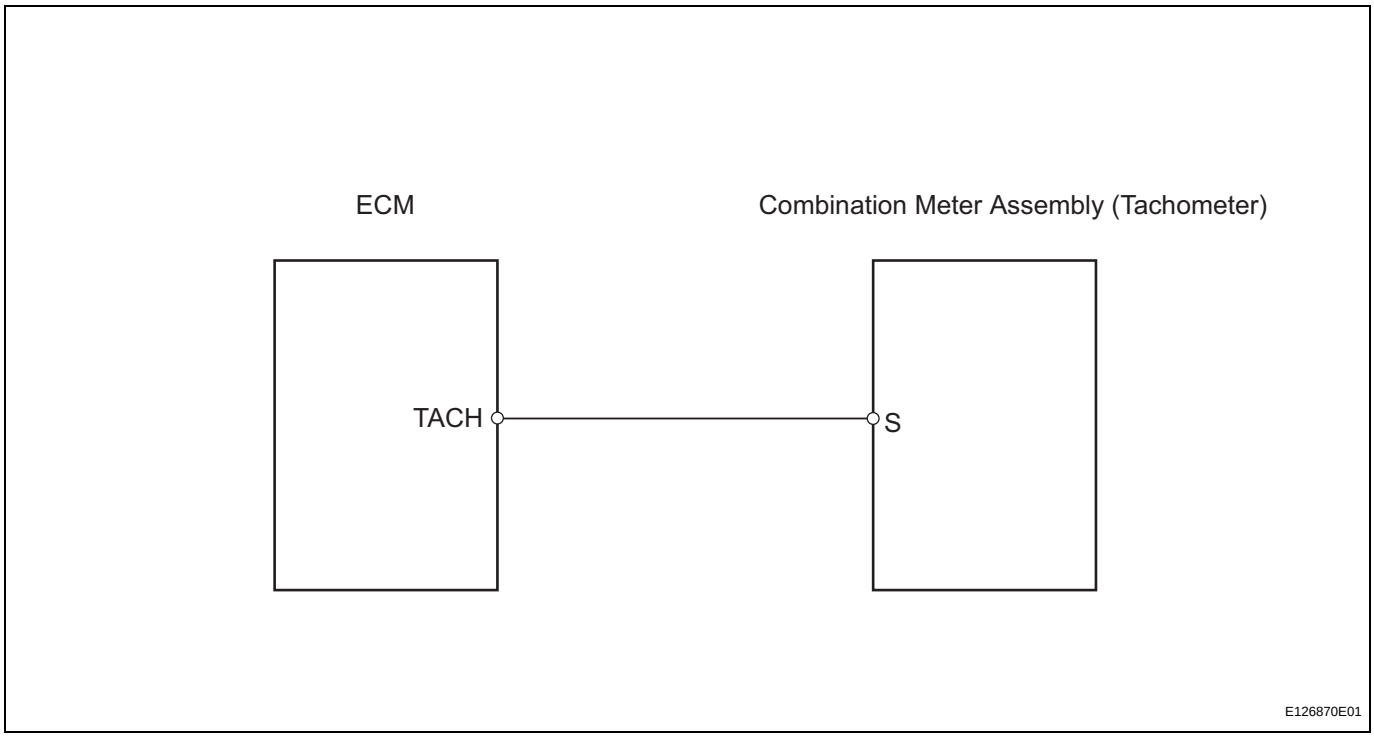

ME

INSPECTION PROCEDURE

1	READ VALUE OF INTELLIGENT TESTER (TACHOMETER)

(a) Connect the intelligent tester to the DLC3.
(b) Turn the ignition switch ON and turn the tester ON.
(c) Select the item below from the Data List, and read the value displayed on the intelligent tester.

METER

Item	Measurement Item/Range (Display)	Normal Condition	Diagnostic Note
TACHOMETER	Engine speed/Min.: 0 rpm, Max.: 12,750 rpm	Approximately same as actual engine speed (When engine is running)	-

OK:
Engine speed displayed on the tester is approximately the same as the actual engine speed.

NG → **GO TO SFI SYSTEM**

OK

2	CHECK WIRE HARNESS AND CONNECTOR (COMBINATION METER ASSEMBLY - ECM)

Wire Harness Side:

Combination Meter Assembly Connector

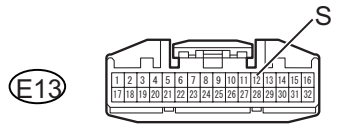

Front View:

ECM Connector

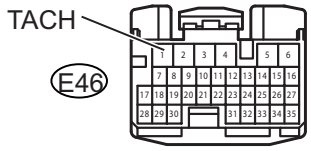

Front View:

E126864E01

(a) Disconnect the E13 combination meter connector.
(b) Disconnect the E46 ECM connector.
(c) Measure the resistance.

Standard resistance

Tester Connection	Specified Condition
E13-12 (S) - E46-1 (TACH)	Below 1 Ω
E13-12 (S) or E46-1 (TACH) - Body ground	10 kΩ or higher

(d) Reconnect the ECM connector.
(e) Reconnect the combination meter connector.

NG → **REPAIR OR REPLACE HARNESS OR CONNECTOR**

OK

REPLACE COMBINATION METER ASSEMBLY

ME

Fuel Gauge Malfunction

DESCRIPTION

The combination meter assembly controls the fuel receiver gauge in accordance with the resistance of the fuel sender gauge that varies depending on the fuel remaining amount in the fuel tank.

WIRING DIAGRAM

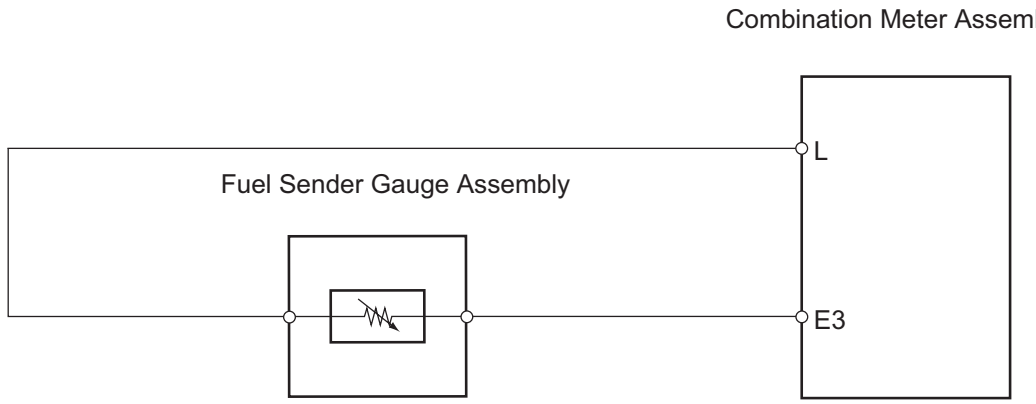

E126871E01

ME

INSPECTION PROCEDURE

1	INSPECT HARNESS AND CONNECTOR

Wire Harness Side:

Fuel Sender Gauge Assembly Connector

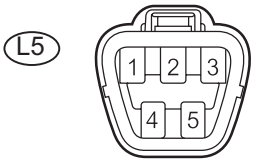

Front View

E126865E01

(a) Disconnect the L5 fuel sender gauge assembly connector.

(b) Check the meter indicator conditions.

Standard

Tester Connection	Condition	Specified Condition
L5-2 - L5-3	Short circuit (Ignition switch ON)	Fuel gauge indicates "F" or more (Combination meter)

HINT:

This inspection creates an intentional short circuit between the connector terminals, to check the meter indicator operation.

NOTICE:

Perform the check quickly (within less than 10 seconds).

(c) Measure the voltage.

Standard Voltage

Tester Connection	Condition	Specified Condition
L5-2 - Body ground	Ignition switch ON	4 to 7V

(d) Reconnect the fuel sender gauge assembly connector.

NG → REPAIR OR REPLACE HARNESS OR CONNECTOR

OK

2 INSPECT FUEL SENDER GAUGE ASSEMBLY

(a) Remove the fuel sender gauge assembly.

Fuel Sender Gauge Assembly:

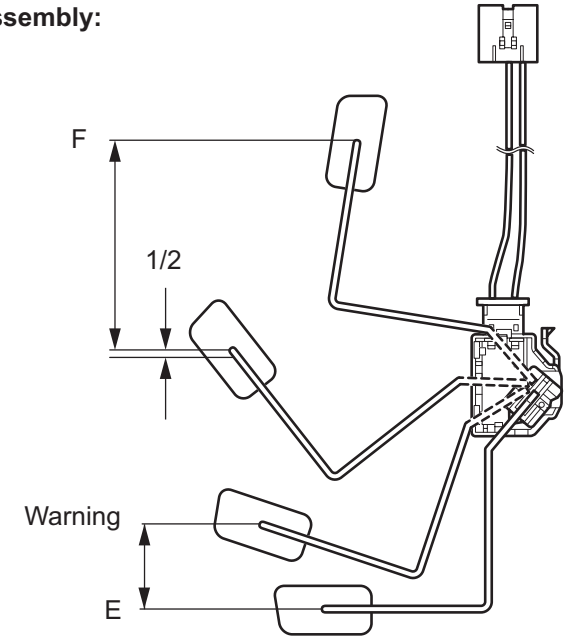

E126882E01

(b) Check that the float position is between E and F.

(c) Measure the resistance between terminals 2 and 3 of the fuel sender gauge connector.

Standard resistance

Float Level	Float Position (mm (in.))	Specified Condition
F	77.3 (3.04) to 79.3 (3.12)	14.7 Ω to 15.3 Ω
1/2	1.6 (0.05)	212.5 Ω
Warning	34.8 (1.37)	375.4 Ω
E	75.0 (2.95) to 77.0 (3.03)	405 Ω to 415 Ω

Wire Harness Side:

Fuel Sender Gauge Assembly Connector

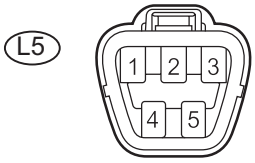

Front View

E126865E01

(d) Reinstall the fuel sender gauge assembly.

NG → REPLACE FUEL SENDER GAUGE ASSEMBLY

OK

ME

3	CHECK WIRE HARNESS AND CONNECTOR (COMBINATION METER ASSEMBLY - FUEL SENDER GAUGE ASSEMBLY)

Wire Harness Side:

Combination Meter Assembly Connector

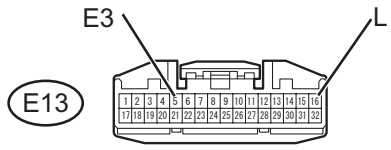

Front View

Fuel Sender Gauge Assembly Connector

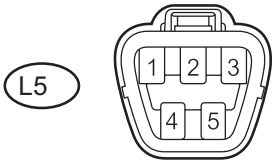

Front View

E126866E01

(a) Disconnect the E13 combination meter assembly connector.
(b) Disconnect the L5 fuel sender gauge assembly connector.
(c) Measure the resistance.
Standard resistance

Tester Connection	Specified Condition
E13-16 (L) - L5-2	Below 1Ω
E13-5 (E3) - L5-3	Below 1Ω
E13-16 (L) or L5-2 - Body ground	10kΩ or higher
E13-5 (E3) or L5-3 - Body ground	10kΩ or higher

(d) Reconnect the combination meter assembly and fuel sender gauge assembly connectors.

NG → **REPAIR OR REPLACE HARNESS OR CONNECTOR**

OK

REPLACE COMBINATION METER ASSEMBLY

ME

Malfunction in Water Temperature Warning Light

DESCRIPTION

The combination meter assembly controls the engine coolant temperature gauge in accordance with engine coolant temperature signals from the ECM.

WIRING DIAGRAM

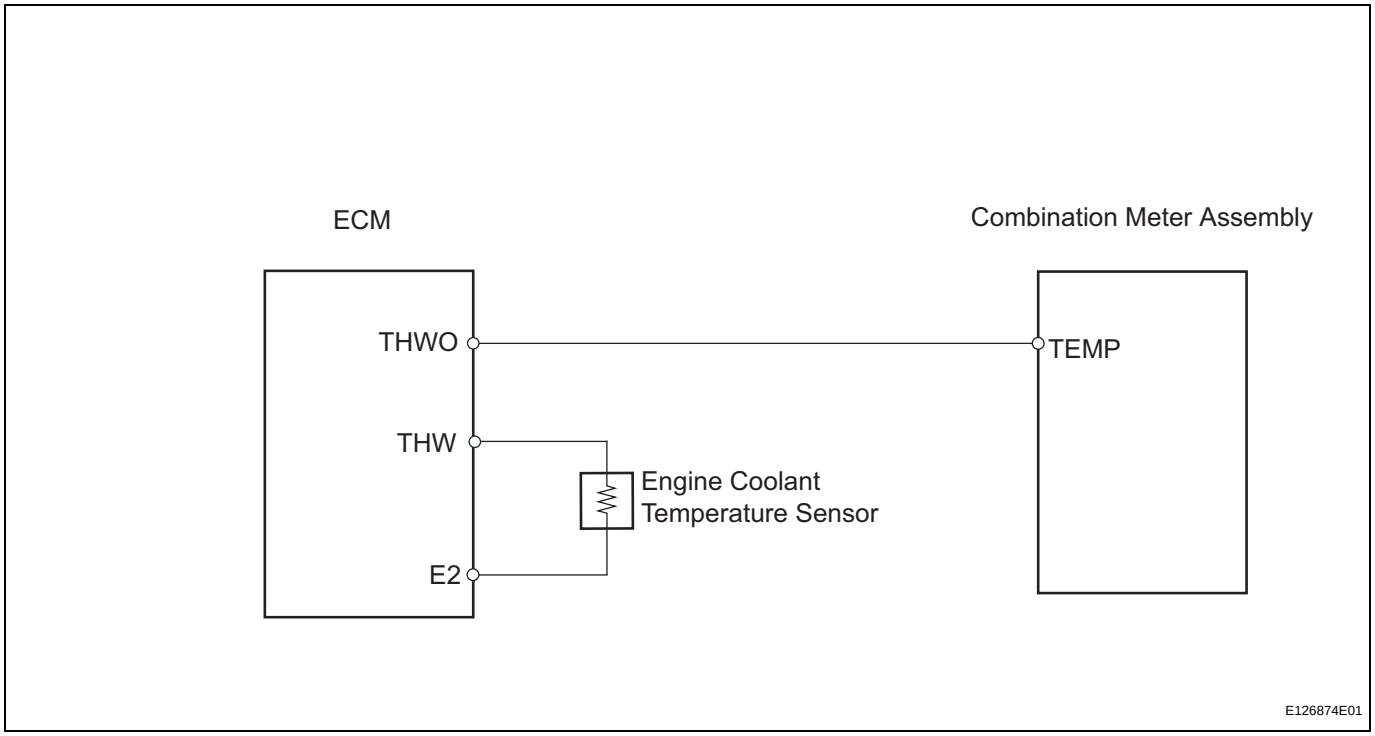

ME

INSPECTION PROCEDURE

1	READ VALUE OF INTELLIGENT TESTER (ENGINE COOLANT TEMPERATURE)

(a) Connect the intelligent tester to the DLC3.
(b) Turn the ignition switch ON and turn the tester ON.
(c) Select the item below from the Data List, and read the value displayed on the intelligent tester.

METER

Item	Measurement Item/Range (Display)	Normal Condition	Diagnostic Note
COOLANT TEMP	Engine coolant temperature / Min.: 0°C,Max.: 127.5°C	After warming up: 75 to 105°C (167 to 221°F)	-

HINT:
- If the value is 0°C (32°F), the sensor circuit is open.
- If the value is 127.5°C (262°F), the sensor circuit is shorted.

OK:

Coolant temperature displayed on the tester is between 75°C (167°F) and 105°C (221°F) after warming up.

NG → **GO TO SFI SYSTEM**

OK

2	CHECK HARNESS AND CONNECTOR (COMBINATION METER ASSEMBLY - ECM)

(a) Disconnect the E13 combination meter connector.
(b) Disconnect the E46 ECM connector.
(c) Measure the resistance.

Standard resistance

Tester Connection	Specified Condition
E13-15 (TEMP) - E46-14 (THWO)	Below 1 Ω
E13-15 (TEMP) or E46-14 (THWO) - Body ground	10kΩ or higher

(d) Reconnect the ECM connector.
(e) Reconnect the combination meter connector.

NG → **REPAIR OR REPLACE HARNESS AND CONNECTOR**

Wire Harness Side:

Combination Meter Assembly Connector

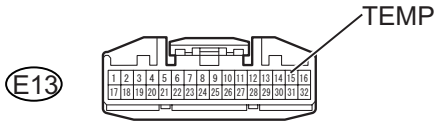

Front View:

ECM Connector

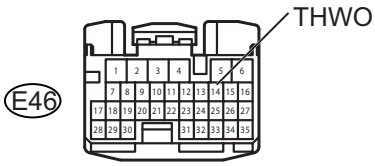

Front View:

E126864E02

OK

REPLACE COMBINATION METER ASSEMBLY

ME

Warning Buzzer does not Sound

DESCRIPTION

The combination meter assembly controls the buzzers in accordance with signals from the front seat inner belt assembly LH, center airbag sensor assembly and the main body ECU.

WIRING DIAGRAM

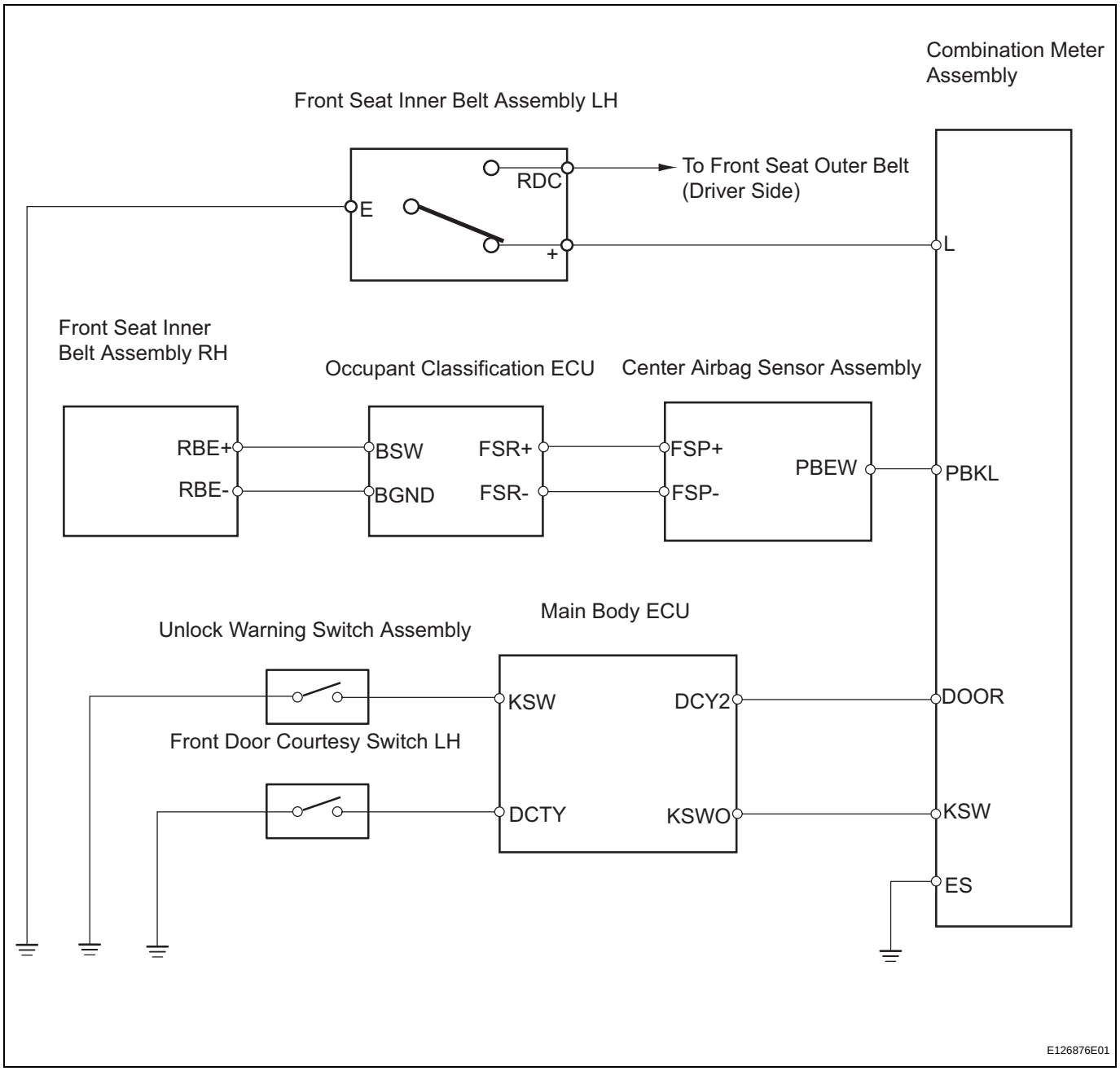

INSPECTION PROCEDURE

1	CHECK BUZZER (SEAT BELT, KEY REMINDER)

(a) Check that the seat belt and key reminder buzzers sound.

Result

Result	Proceed to
Seat belt warning buzzer does not sound (Driver side)	A
Seat belt warning buzzer does not sound (Passenger side)	B
Key reminder warning buzzer does not sound	C
No warning buzzers sound	D

HINT:
- Seat belt warning buzzer on: Ignition switch is ON, driver or front passenger seat belt is unfastened, and vehicle speed is 12.4mph (20 km/h) or more.
- Key reminder warning buzzer on: Ignition switch is OFF, key is in ignition key cylinder, and driver side door is open.

B → **Go to step 5**

C → **GO TO KEY REMINDER WARNING SYSTEM**

D → **REPLACE COMBINATION METER ASSEMBLY**

A

2 INSPECT FRONT SEAT INNER BELT ASSEMBLY (DRIVER SIDE)

(a) Disconnect the L19 front seat inner belt assembly (driver side) connector.
(b) Measure the resistance.
Standard resistance

Tester Connection	Condition	Specified Condition
+ - E	Tongue plate fastened	10 k Ω or higher
+ - E	Tongue plate unfastened	Below 1 Ω

(c) Reconnect the front seat inner belt assembly (driver side) connector.

NG → **REPLACE FRONT SEAT INNER BELT ASSEMBLY LH**

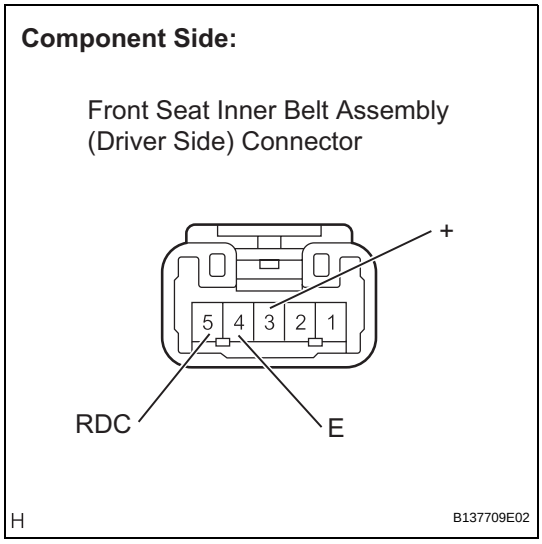

OK

3 CHECK HARNESS AND CONNECTOR (COMBINATION METER ASSEMBLY - FRONT SEAT INNER BELT ASSEMBLY)

(a) Disconnect the E13 combination meter assembly connector.
(b) Disconnect the L19 front seat inner belt assembly (driver side) connector.

Wire Harness Side:

Front Seat Inner Belt Assembly
(Driver Side) Connector

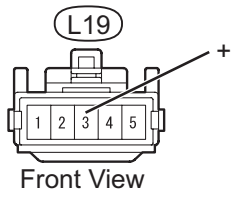

Front View

Combination Meter Assembly Connector

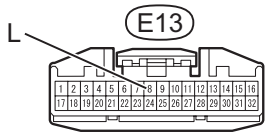

Front View

B137678E02

(c) Measure the resistance.
Standard resistance

Tester Connection	Specified Condition
E13-8 (L) - L19-3 (+)	Below 1 Ω

(d) Reconnect the combination meter assembly connector.
(e) Reconnect the front seat inner belt assembly (driver side) connector.

NG → **REPAIR OR REPLACE HARNESS OR CONNECTOR**

OK

4 CHECK HARNESS AND CONNECTOR (FRONT SEAT INNER BELT ASSEMBLY - BODY GROUND)

Wire Harness Side:

Front Seat Inner Belt Assembly
(Driver Side) Connector

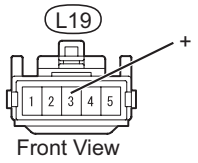

Front View

E133659E01

(a) Disconnect the L19 front seat inner belt assembly (driver side) connector.
(b) Measure the resistance.
Standard resistance

Tester Connection	Specified Condition
L19-3 (+) - Body ground	Below 1 Ω

(c) Reconnect the front seat inner belt assembly (driver side) connector.

NG → **REPAIR OR REPLACE HARNESS OR CONNECTOR**

OK

REPLACE COMBINATION METER ASSEMBLY

5 CHECK SUPPLEMENTAL RESTRAINT SYSTEM

(a) Connect the intelligent tester to the DLC3.
(b) Turn the ignition switch ON and turn the tester ON.
(c) Enter the following menus: DIAGNOSIS / SRS AIRBAG/ DTC INFO.

ME

Result

Result	Proceed to
No SRS DTCs are output	A
SRS DTCs are output	B

B → **GO TO SUPPLEMENTAL RESTRAINT SYSTEM**

A

6	CHECK OCCUPANT CLASSIFICATION SYSTEM

(a) Connect the intelligent tester to the DLC3.
(b) Turn the ignition switch ON and turn the tester ON.
(c) Enter the following menus: DIAGNOSIS / OCCUPANT DETECT /DTC INFO.

Result

Result	Proceed to
No occupant classification system DTCs are output	A
Occupant classification system DTCs are output	B

B → **GO TO OCCUPANT CLASSIFICATION SYSTEM**

ME

A

7	CHECK HARNESS AND CONNECTOR (CENTER AIRBAG SENSOR ASSEMBLY - COMBINATION METER ASSEMBLY)

(a) Disconnect the E29 center airbag sensor assembly connector.
(b) Disconnect the E13 combination meter assembly connector.

Wire Harness Side:

Center Airbag Sensor Assembly Connector

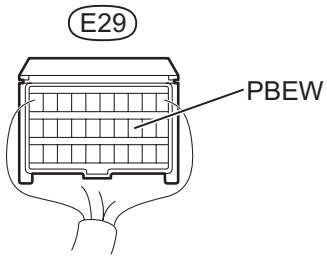

Combination Meter Assembly Connector

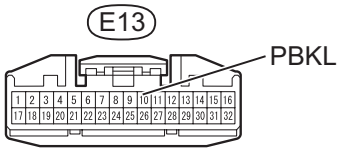

Front View

B137690E01

(c) Measure the resistance.
Standard resistance

Tester Connection	Specified Condition
E29-13 (PBEW) - E13-10 (PBKL)	Below 1 Ω

(d) Reconnect the center airbag sensor assembly connector.
(e) Reconnect the combination meter assembly connector.

NG → **REPAIR OR REPLACE HARNESS OR CONNECTOR**

OK

REPLACE COMBINATION METER ASSEMBLY

ME

Operating Light Control Rheostat does not Change Light Brightness

DESCRIPTION

The combination meter assembly controls the combination meter illumination in accordance with the light control signals from the light control rheostat.

WIRING DIAGRAM

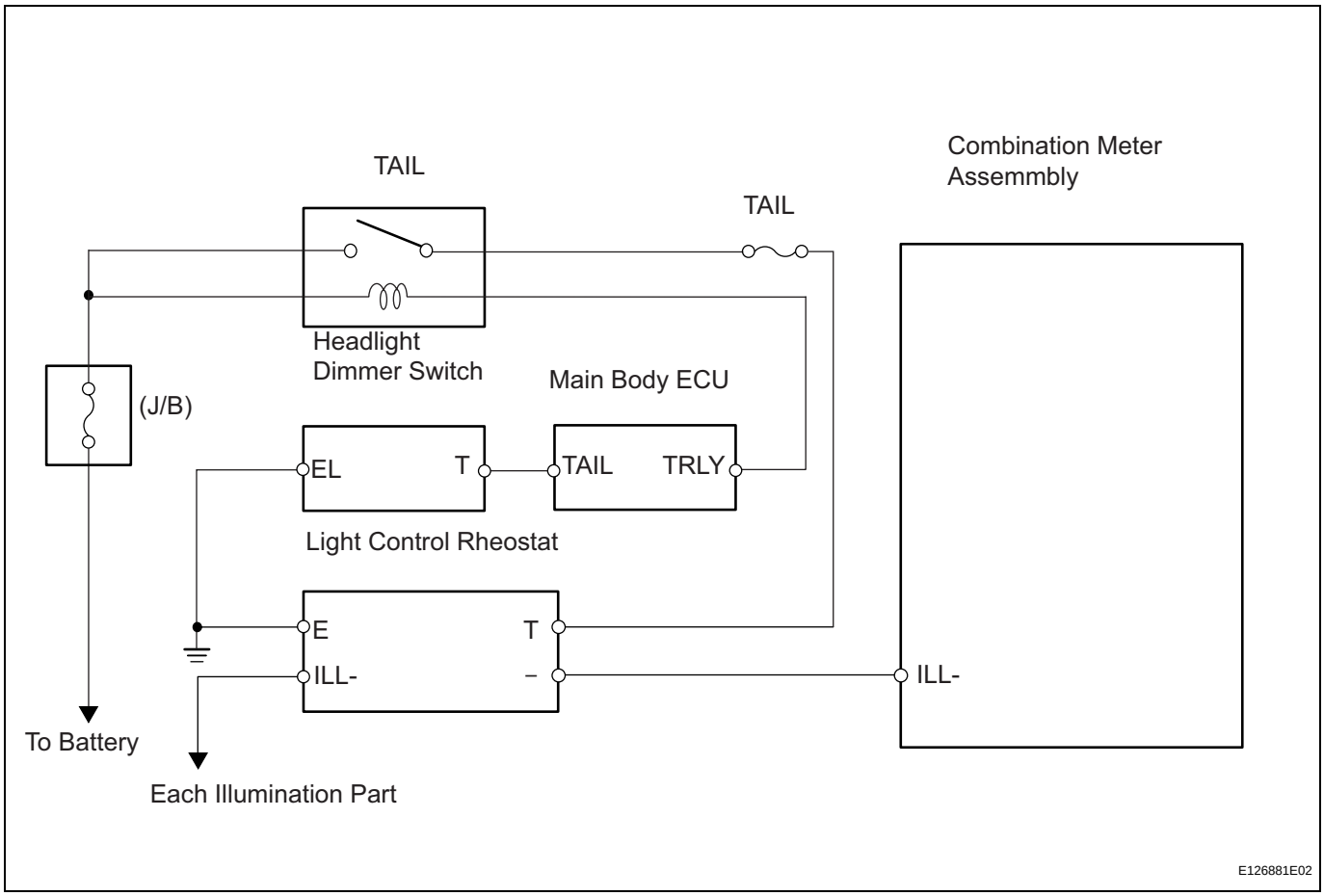

INSPECTION PROCEDURE

1	INSPECT FUSE (TAIL)

(a) Remove the TAIL fuse from the main body ECU.
(b) Measure the resistance.
Standard resistance:
Below 1 Ω
(c) Reinstall the TAIL fuse.

NG → **REPLACE FUSE**

OK

2 CHECK HARNESS AND CONNECTOR (FUSE (TAIL) - RHEOSTAT, RHEOSTAT - BODY GROUND)

Wire Harness Side:

Light Control Rheostat Connector

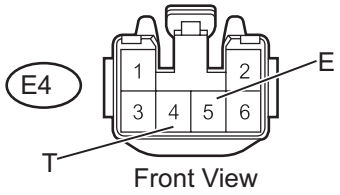

E126877E01

(a) Disconnect the E4 light control rheostat connector.
(b) Measure the voltage and resistance.

Standard

Tester Connection	Condition	Specified Condition
E4-4 (T) - Body ground	Tail light ON	11 to 14V
E4-5 (E) - Body ground	Always	Below 1 Ω

(c) Reconnect the light control rheostat connector.

NG → **REPAIR OR REPLACE HARNESS OR CONNECTOR**

OK

3 INSPECT LIGHT CONTROL RHEOSTAT

Component Side:

Light Control Rheostat

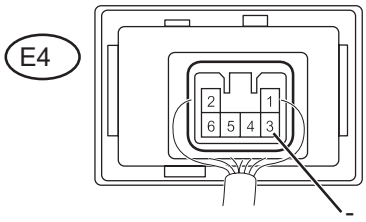

Waveform :

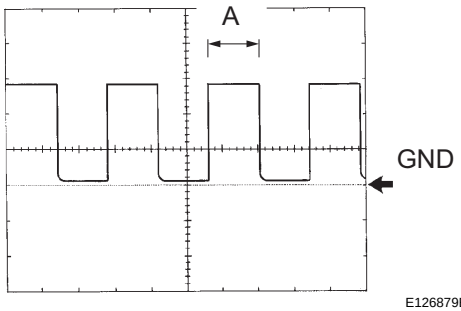

E126879E01

(a) Remove the light control rheostat but without disconnecting the connector.
(b) Turn the ignition switch ON.
(c) Using an oscilloscope, check the signal waveform of the light control rheostat.

Item	Contents
Terminal connection	E4-3 (-) - Body ground
Tool setting	5V / DIV, 50ms / DIV
Vehicle condition	Ignition switch ON

OK:

Waveform is as shown in the illustration.

HINT:

Duty ratio changes as the illumination dims. (A becomes longer)

(d) Reinstall the light control rheostat.

NG → **REPLACE LIGHT CONTROL RHEOSTAT**

OK

ME

4	CHECK HARNESS AND CONNECTOR (COMBINATION METER ASSEMBLY -Å@LIGHT CONTROL RHEOSTAT)

Wire Harness Side:

Combination Meter Assembly Connector

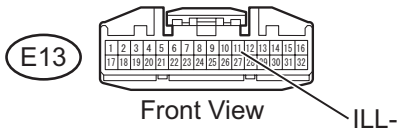

Light Control Rheostat Connector

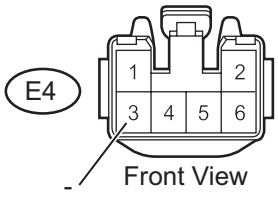

E126880E01

(a) Disconnect the E13 combination meter assembly connector.
(b) Disconnect the E4 light control rheostat connector.
(c) Measure the resistance.
Standard resistance

Tester Connection	Specified Condition
E13-11 (ILL-) - E4-3 (-)	Below 1 Ω

(d) Reconnect the combination meter assembly connector.
(e) Reconnect the light control rheostat connector.

NG → **REPAIR OR REPLACE HARNESS OR CONNECTOR**

OK

REPLACE COMBINATION METER ASSEMBLY

ME

COMBINATION METER

COMPONENTS

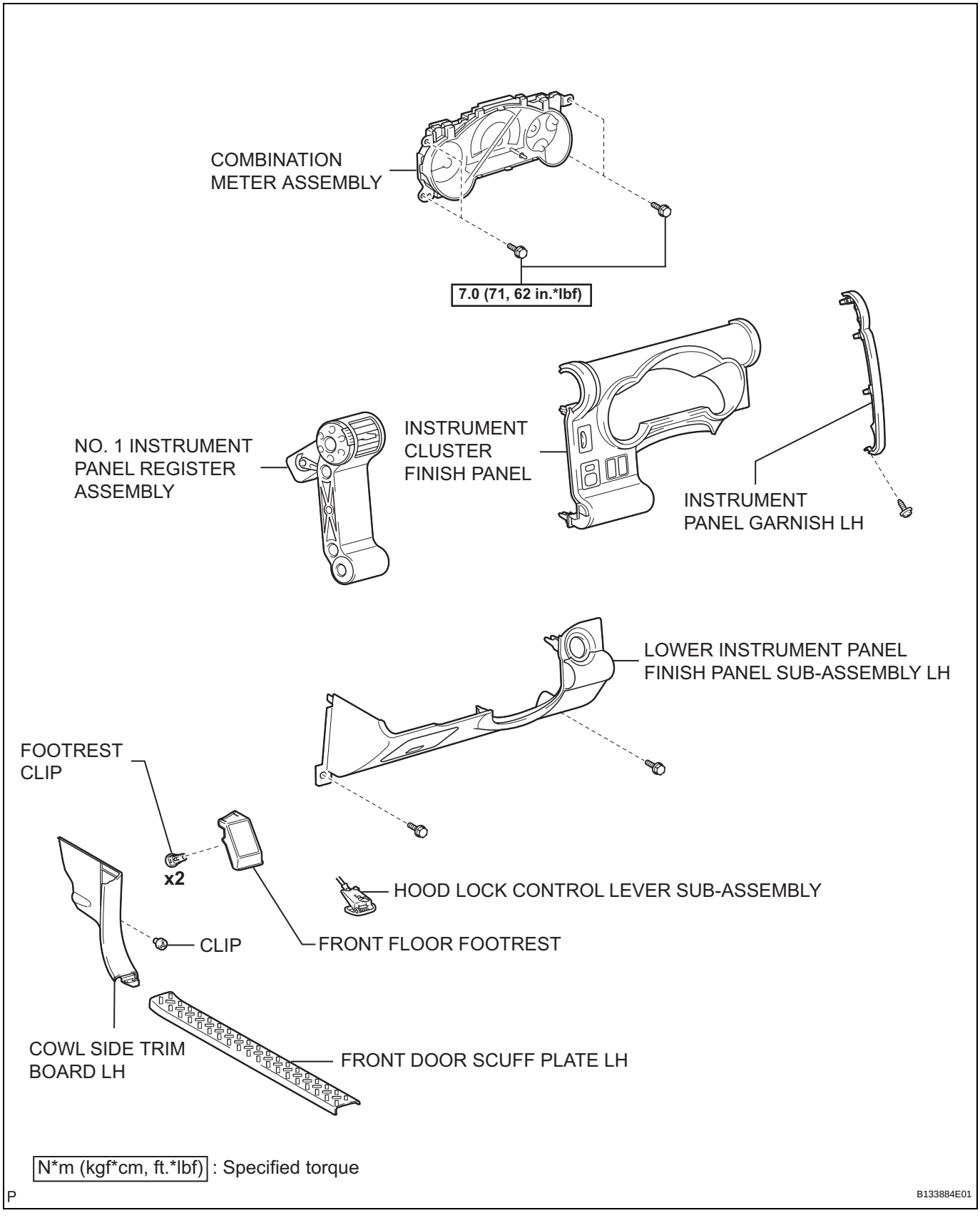

ME

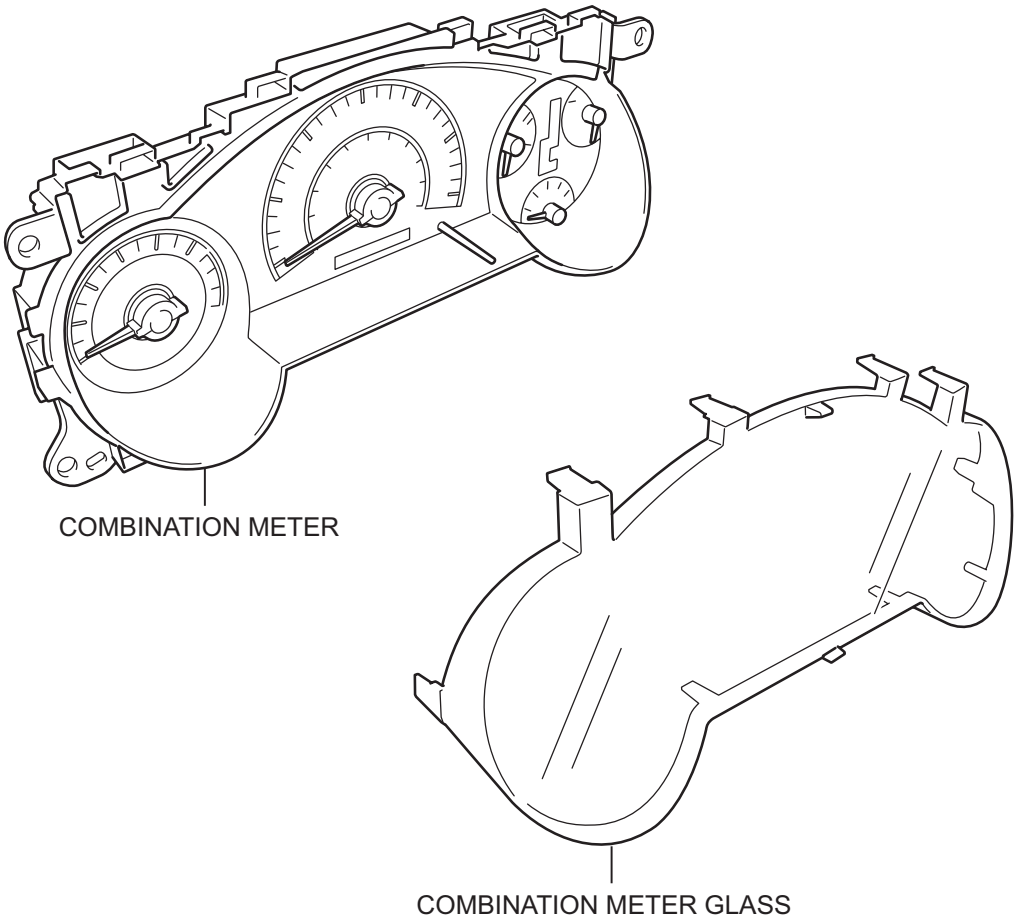

E127928E01

REMOVAL

1. **DISCONNECT CABLE FROM NEGATIVE BATTERY TERMINAL**

2. **REMOVE FRONT DOOR SCUFF PLATE LH**
   (a) Disengage the 14 claws and remove the front door scuff plate.

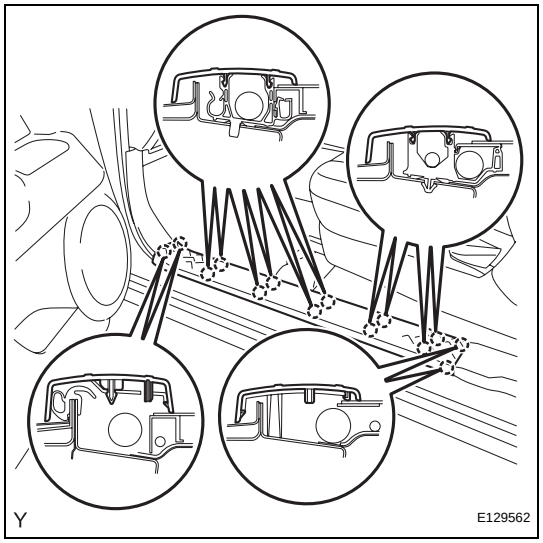

3. **REMOVE FRONT FLOOR FOOTREST (See page IR-2)**

4. **REMOVE FOOTREST CLIP (See page IR-2)**

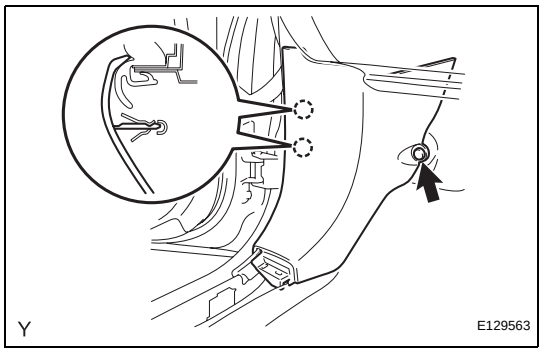

5. **REMOVE COWL SIDE TRIM BOARD LH**
   (a) Remove the clip.
   (b) Disengage the 2 claws and remove the cowl side trim board.

6. **REMOVE INSTRUMENT PANEL GARNISH LH (See page IP-10)**

7. **REMOVE NO. 1 INSTRUMENT PANEL REGISTER ASSEMBLY (See page IP-13)**

8. **REMOVE HOOD LOCK CONTROL LEVER SUB-ASSEMBLY (See page IP-13)**

9. **REMOVE LOWER INSTRUMENT PANEL FINISH PANEL SUB-ASSEMBLY LH (See page IP-14)**

10. **REMOVE INSTRUMENT CLUSTER FINISH PANEL (See page IP-14)**

11. **REMOVE COMBINATION METER ASSEMBLY**
    (a) Remove the 4 screws.

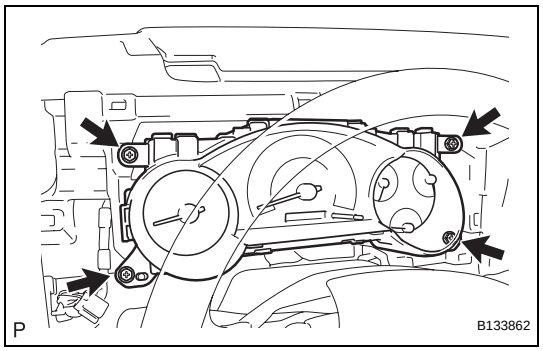

ME

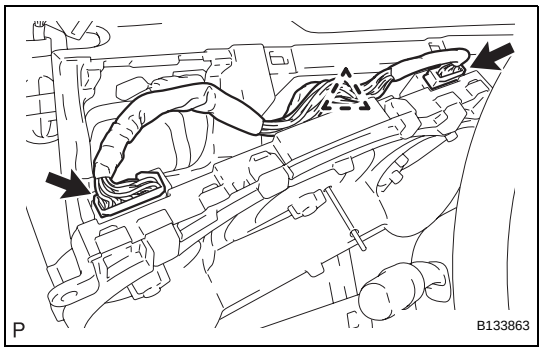

(b) Disconnect the 2 connectors and clamp and remove the combination meter.

DISASSEMBLY

1. REMOVE COMBINATION METER GLASS

(a) Disengage the 8 claws and remove the combination meter glass.

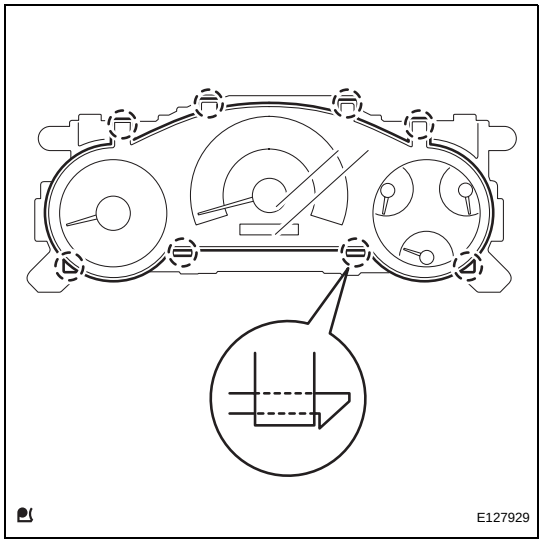

REASSEMBLY

1. INSTALL COMBINATION METER GLASS

(a) Engage the 8 claws and install the combination meter glass.

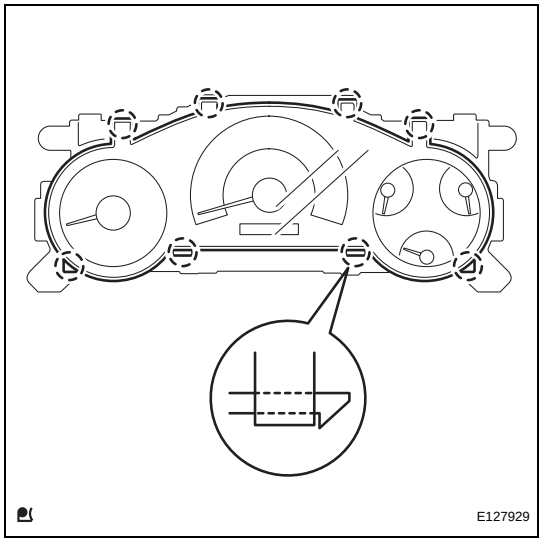

INSTALLATION

1. INSTALL COMBINATION METER ASSEMBLY

(a) Connect the 2 connectors and the clamp.

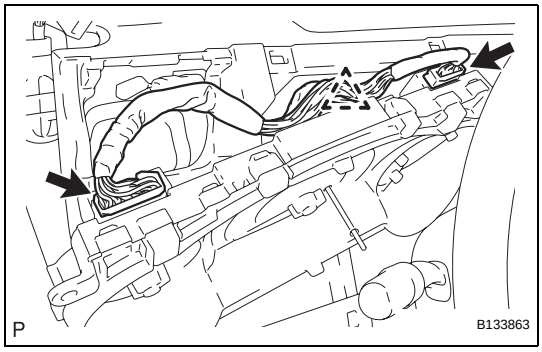

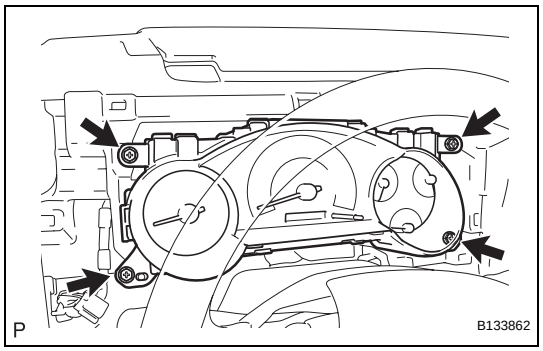

(b) Install the combination meter assembly with the 4 screws.
Torque: 7.0 N*m (71 kgf*cm, 62 in.*lbf)

2. **INSTALL INSTRUMENT CLUSTER FINISH PANEL (See page IP-29)**
3. **INSTALL LOWER INSTRUMENT FINISH PANEL SUB-ASSEMBLY LH (See page IP-29)**
4. **INSTALL HOOD LOCK CONTROL LEVER SUB-ASSEMBLY (See page IP-30)**
5. **INSTALL NO. 1 INSTRUMENT PANEL REGISTER ASSEMBLY (See page IP-30)**
6. **INSTALL INSTRUMENT PANEL GARNISH LH (See page IP-33)**

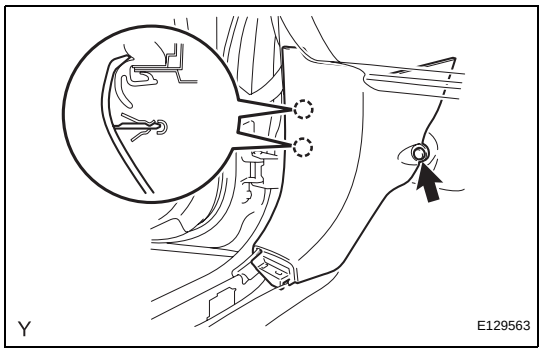

7. **INSTALL COWL SIDE TRIM BOARD LH**
   (a) Engage the 2 claws and install the cowl side trim board.
   (b) Install the clip.
8. **INSTALL FOOTREST CLIP (See page IR-2)**
9. **INSTALL FRONT FLOOR FOOTREST (See page IR-2)**

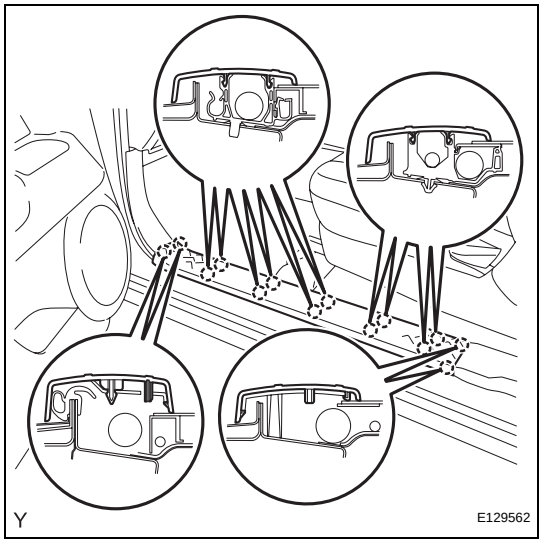

10. **INSTALL FRONT DOOR SCUFF PLATE LH**
    (a) Engage the 14 claws and install the door scuff plate.
11. **CONNECT CABLE TO NEGATIVE BATTERY TERMINAL**
    Torque: 3.9 N*m (40 kgf*cm, 35 in.*lbf)

ME

ACCESSORY METER

COMPONENTS

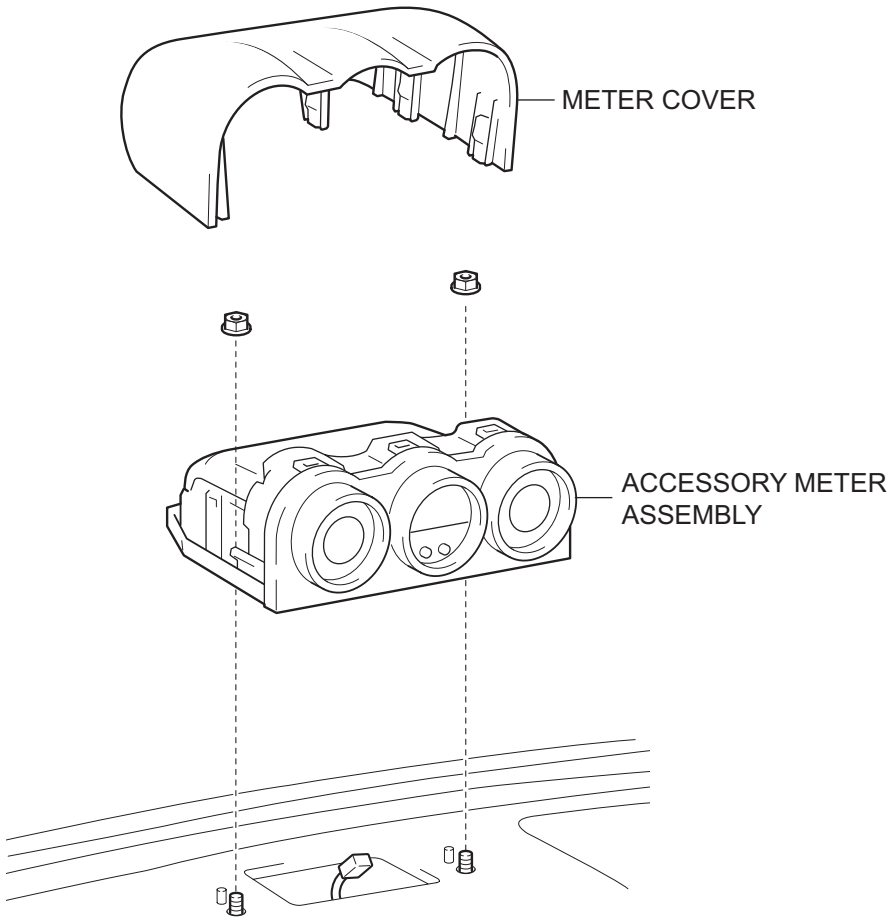

P

B133883E01

REMOVAL

1. DISCONNECT CABLE FROM NEGATIVE BATTERY TERMINAL

2. REMOVE METER COVER

(a) Disengage the 6 clips and remove the meter cover.

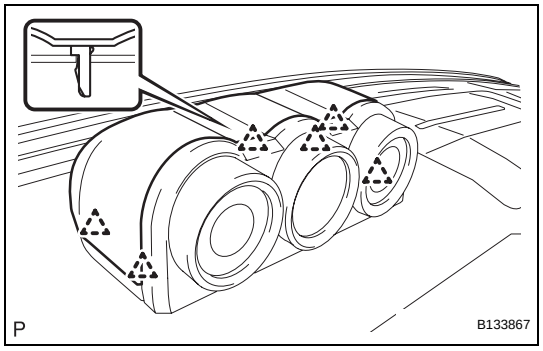

3. REMOVE ACCESSORY METER ASSEMBLY

(a) Remove the 2 nuts and remove the accessory meter.

(b) Disconnect the connector.

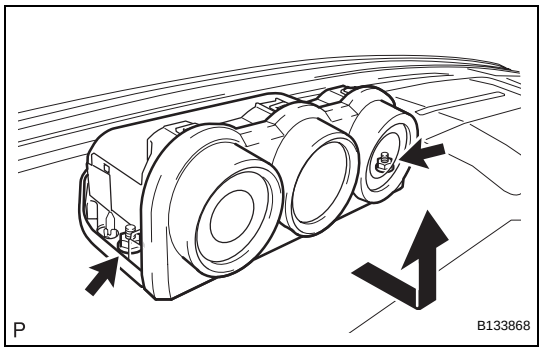

INSTALLATION

1. INSTALL ACCESSORY METER ASSEMBLY

(a) Connect the connector.

(b) Install the accessory meter with the 2 nuts.

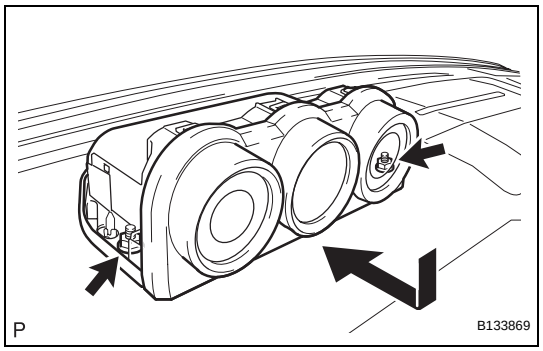

2. INSTALL METER COVER

(a) Engage the 6 clips and install the meter cover.

3. CONNECT CABLE TO NEGATIVE BATTERY TERMINAL

Torque: 3.9 N*m (40 kgf*cm, 35 in.*lbf)

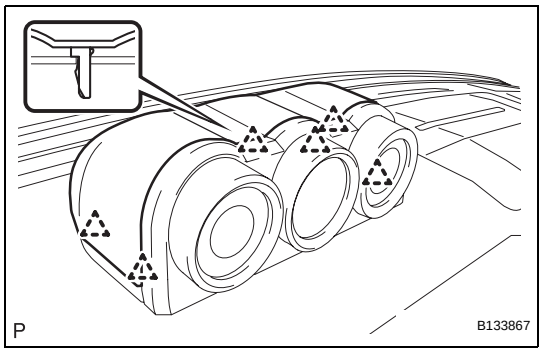

ME

FUEL SENDER GAUGE ASSEMBLY

COMPONENTS

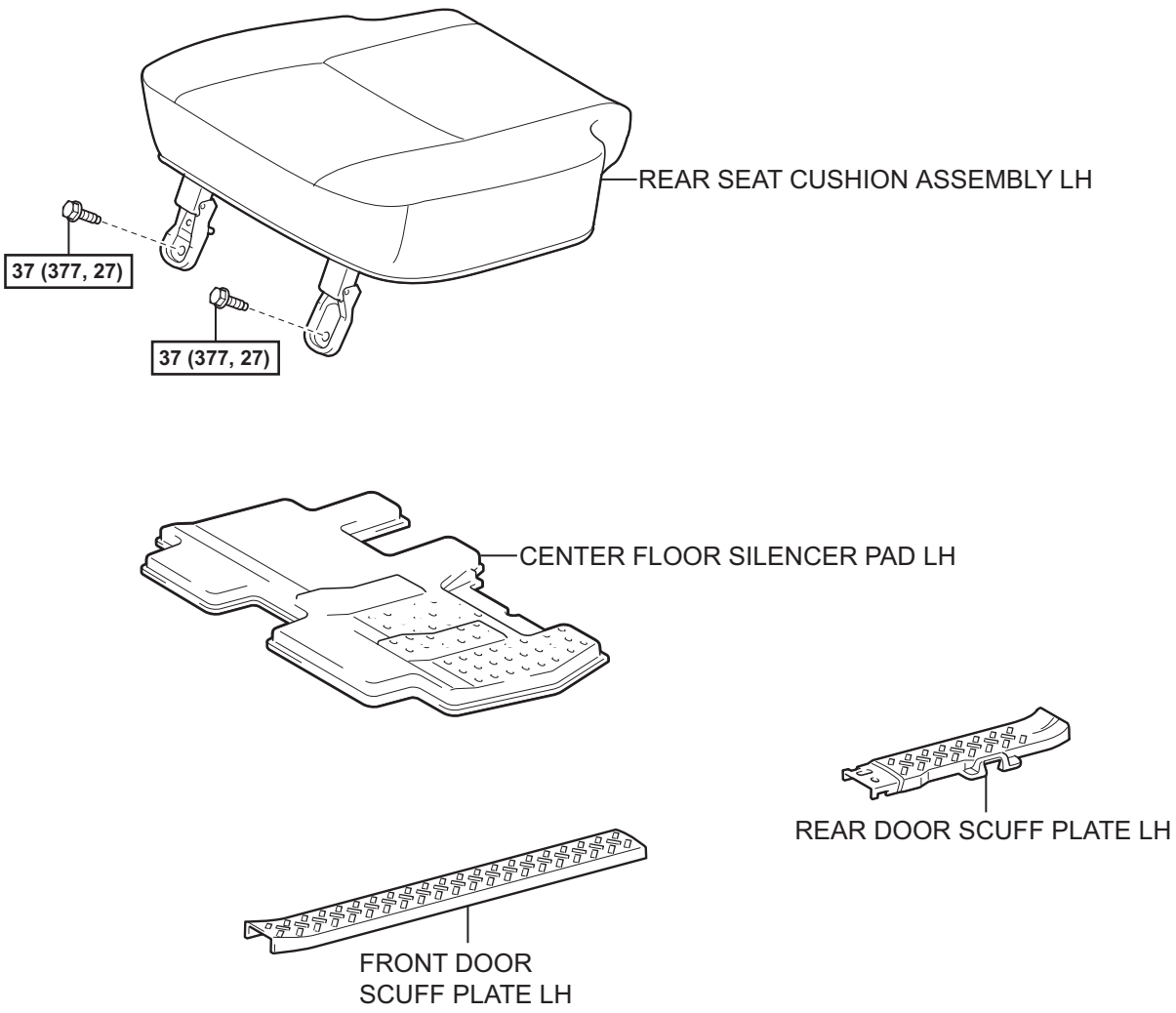

ME

N*m (kgf*cm, ft*lbf) : Specified torque

P

A129922E01

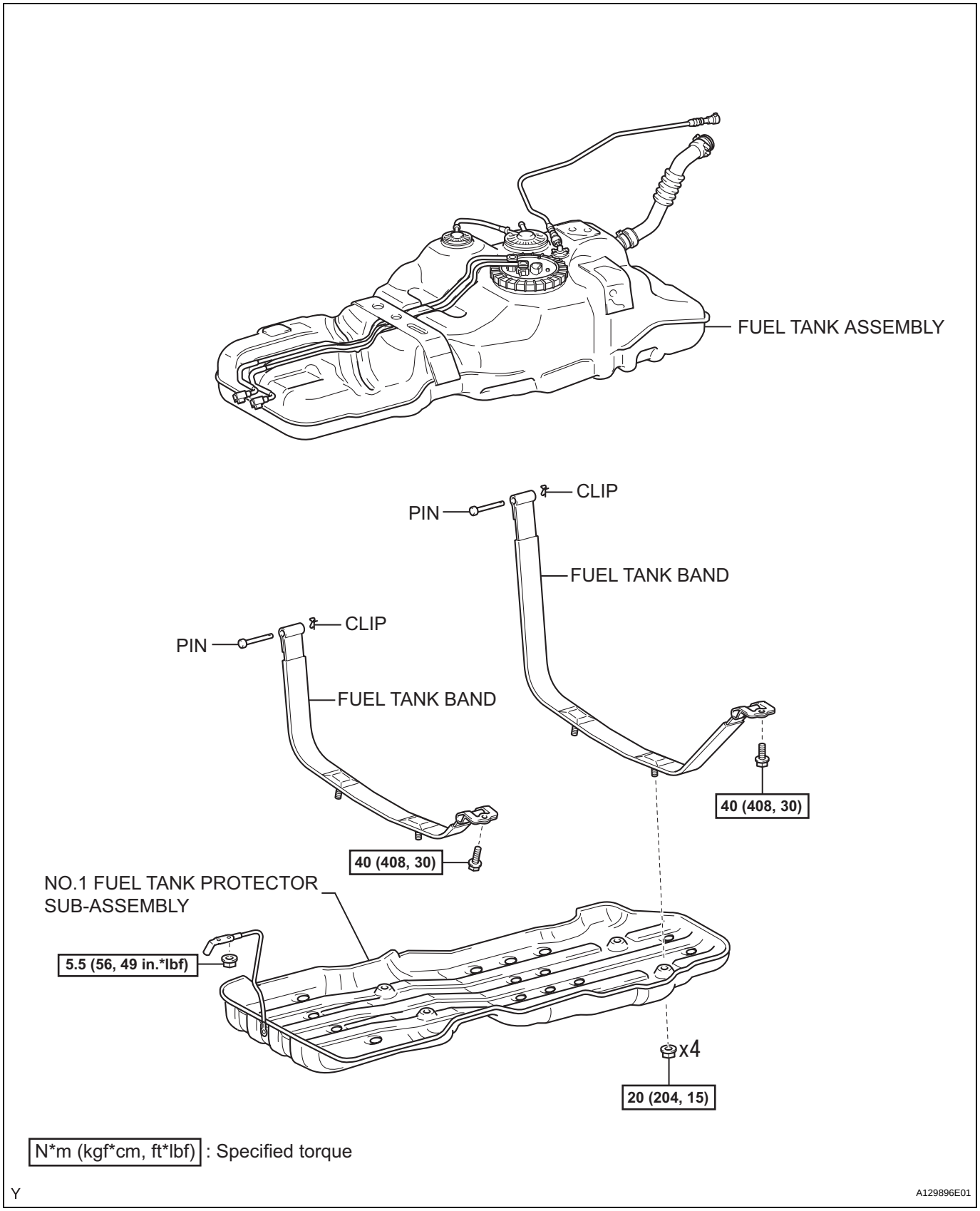

N*m (kgf*cm, ft*lbf) : Specified torque

Y

A129896E01

ME

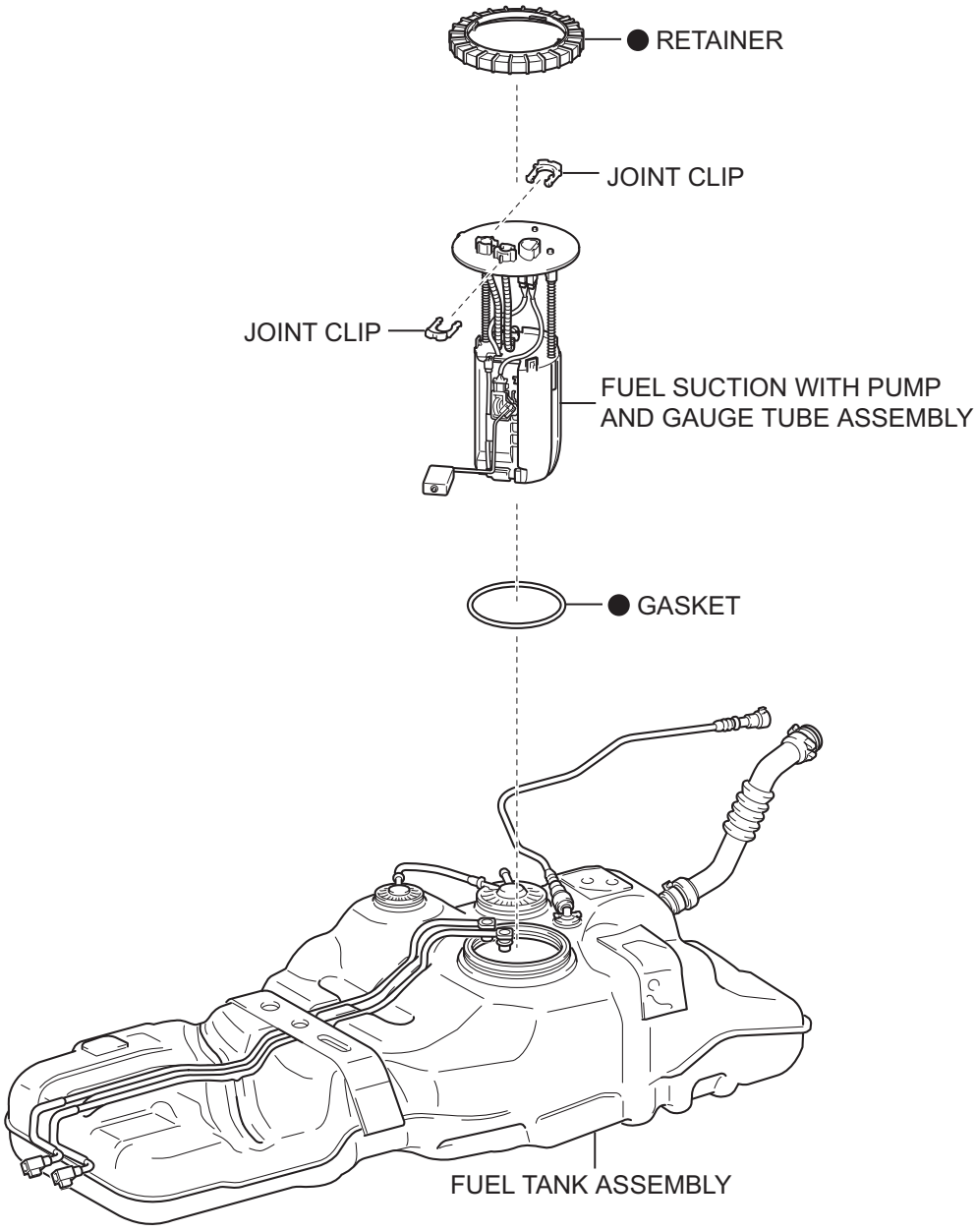

ME

● Non-reusable part

Y

A130150E02

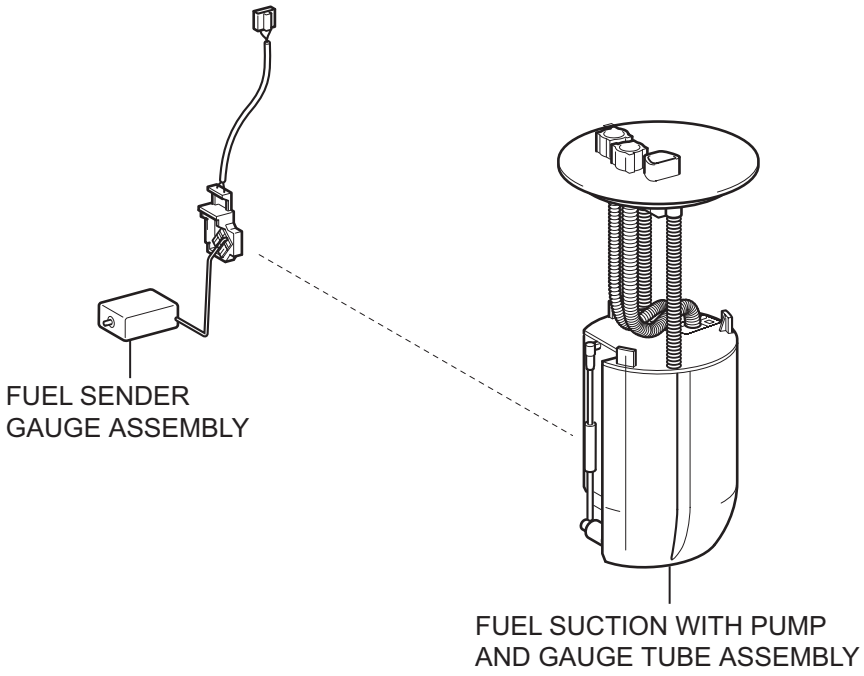

ME

T

E127930E01

REMOVAL

1. **DISCHARGE FUEL SYSTEM PRESSURE (See page FU-28)**
2. **DISCONNECT CABLE FROM NEGATIVE BATTERY TERMINAL**
3. **REMOVE FRONT DOOR SCUFF PLATE LH (See page FU-42)**
4. **REMOVE REAR DOOR SCUFF PLATE LH (See page FU-42)**
5. **REMOVE REAR SEAT CUSHION ASSEMBLY LH (See page FU-42)**
6. **REMOVE REAR FLOOR SERVICE HOLE COVER (See page FU-42)**
7. **DISCONNECT FUEL TANK TO FILLER PIPE HOSE (See page FU-43)**
8. **DISCONNECT FUEL TANK BREATHER TUBE SUB-ASSEMBLY (See page FU-44)**
9. **REMOVE NO. 1 FUEL TANK PROTECTOR SUB-ASSEMBLY (See page FU-44)**
10. **DISCONNECT FUEL TANK MAIN TUBE AND FUEL TANK RETURN TUBE (See page FU-45)**
11. **DISCONNECT FUEL TANK VENT HOSE (See page FU-45)**
12. **REMOVE FUEL TANK ASSEMBLY (See page FU-45)**
13. **REMOVE FUEL TANK MAIN TUBE AND FUEL TANK RETURN TUBE (See page FU-47)**
14. **REMOVE FUEL SUCTION WITH PUMP AND GAUGE TUBE ASSEMBLY (See page FU-29)**
15. **REMOVE FUEL SENDER GAUGE ASSEMBLY**
    (a) Disconnect the fuel sender gauge connector.

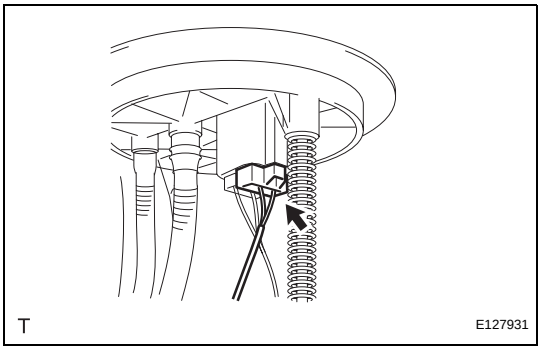

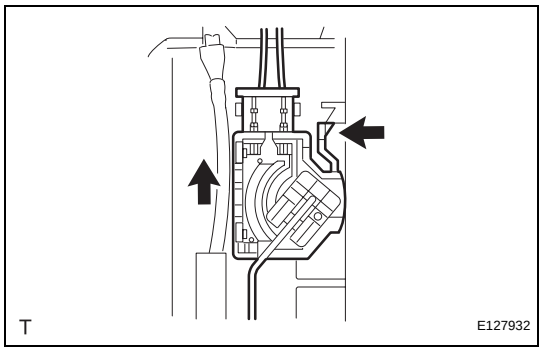

(b) Unlock the fuel sender gauge, and slide and remove it.

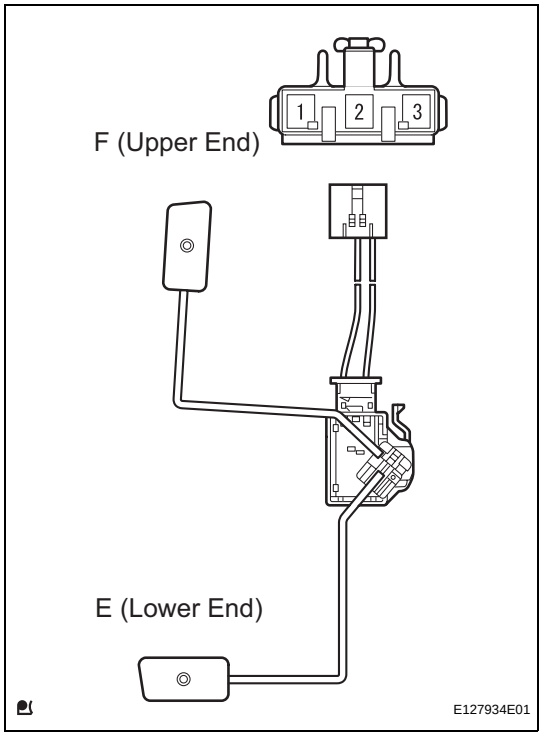

INSPECTION

1. INSPECT FUEL SENDER GAUGE ASSEMBLY

(a) Check the fuel sender gauge resistance.

(1) Check that the float moves smoothly between the F level (upper end) and E level (lower end).

(2) Using an ohmmeter, measure the resistance.

Standard resistance

Tester Condition	Condition	Specified Condition
1 - 2	F (Upper End)	12.0 to 18.0 Ω
1 - 2	E (Lower End)	405.0 to 415.0 Ω

If the result is not as specified, replace the fuel sender gauge assembly.

ME

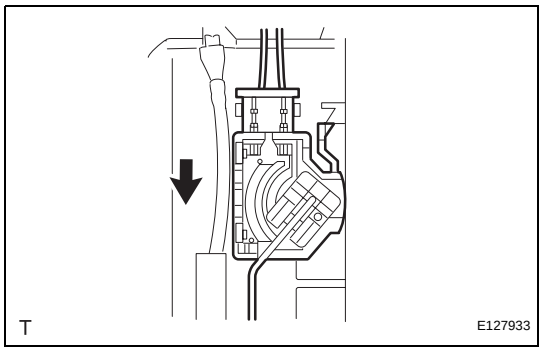

INSTALLATION

1. INSTALL FUEL SENDER GAUGE ASSEMBLY

(a) Install the fuel sender gauge onto the fuel suction with pump and gauge tube.

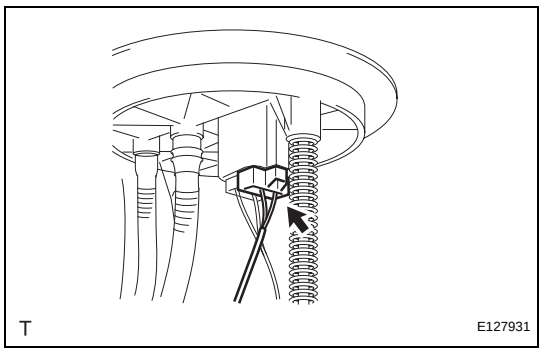

(b) Connect the fuel sender gauge connector.

2. INSTALL FUEL SUCTION WITH PUMP AND GAUGE TUBE ASSEMBLY (See page FU-34)

3. INSTALL FUEL TANK MAIN TUBE AND FUEL TANK RETURN TUBE (See page FU-49)

4. INSTALL FUEL TANK ASSEMBLY (See page FU-50)

5. CONNECT FUEL TANK VENT HOSE (See page FU-50)

6. **CONNECT FUEL TANK MAIN TUBE AND FUEL TANK RETURN TUBE (See page FU-49)**
7. **CONNECT FUEL TANK BREATHER TUBE SUB-ASSEMBLY (See page FU-51)**
8. **CONNECT FUEL TANK TO FILLER PIPE HOSE (See page FU-51)**
9. **INSTALL NO. 1 FUEL TANK PROTECTOR SUB-ASSEMBLY (See page FU-51)**
10. **INSTALL REAR FLOOR SERVICE HOLE COVER (See page FU-52)**
11. **INSTALL REAR SEAT CUSHION ASSEMBLY LH (See page FU-53)**
12. **INSTALL REAR DOOR SCUFF PLATE LH (See page FU-52)**
13. **INSTALL FRONT DOOR SCUFF PLATE LH (See page FU-53)**
14. **CONNECT CABLE TO NEGATIVE BATTERY TERMINAL**
    Torque: 3.9 N*m (40 kgf*cm, 35 in.*lbf)
15. **CHECK FOR FUEL LEAKAGE (See page FU-7)**

LIGHT CONTROL RHEOSTAT

COMPONENTS

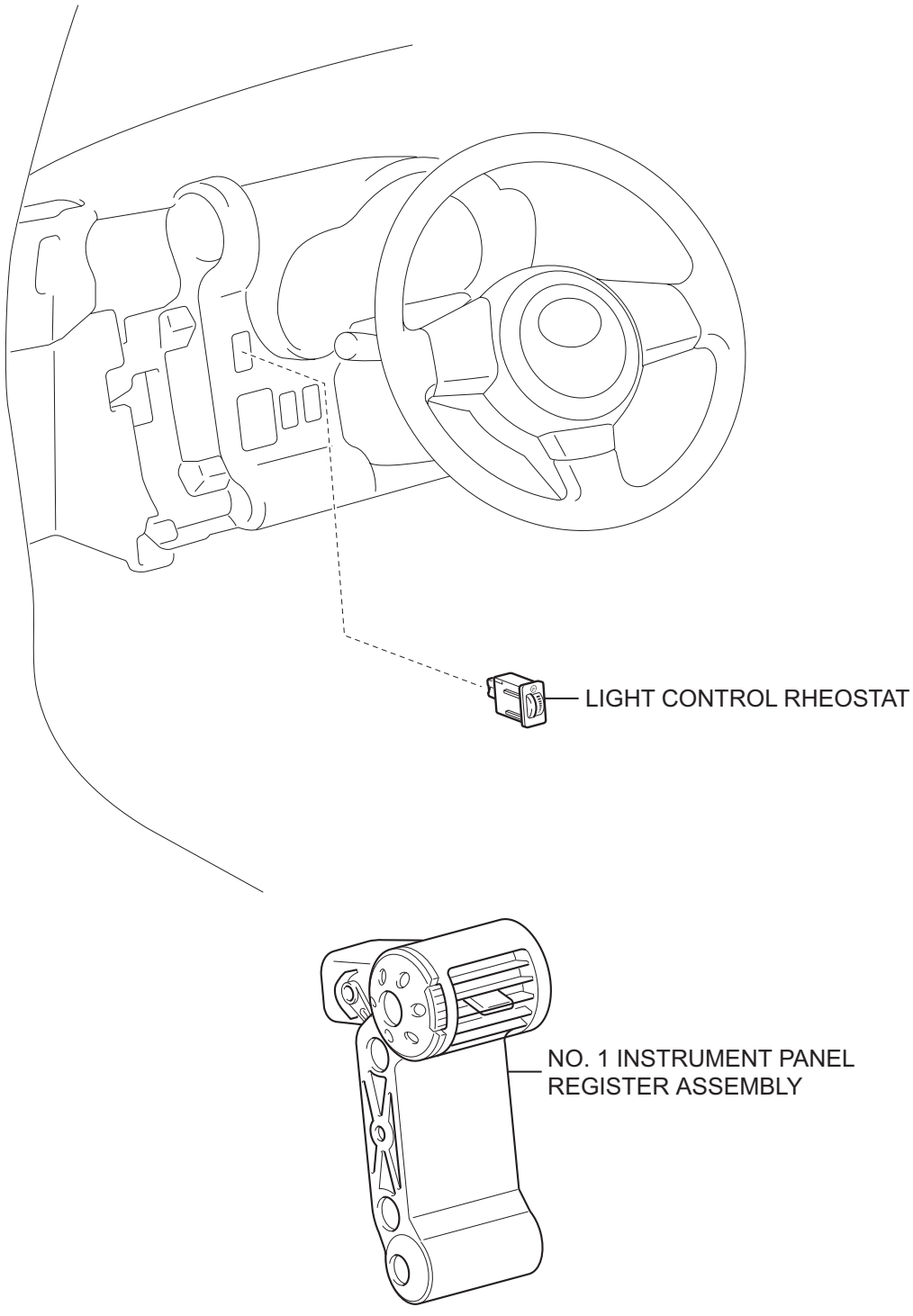

T

E127935E01

REMOVAL

1. **DISCONNECT CABLE FROM NEGATIVE BATTERY TERMINAL**
2. **REMOVE NO. 1 INSTRUMENT PANEL REGISTER ASSEMBLY (See page IP-13)**
3. **REMOVE LIGHT CONTROL RHEOSTAT**
   (a) Disconnect the connector.
   (b) Disengage the 2 claws and remove the light control rheostat.

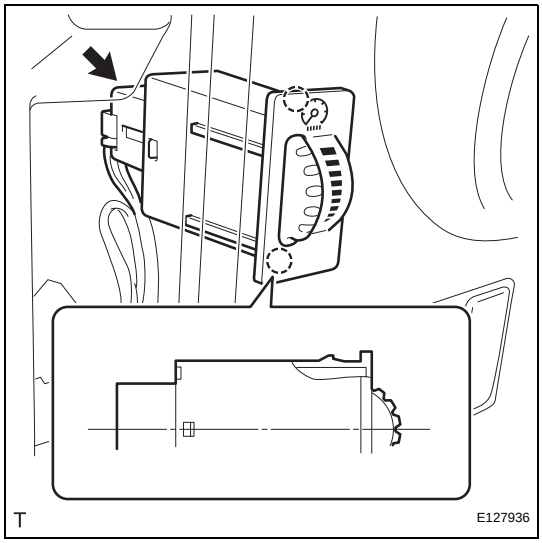

INSTALLATION

1. **INSTALL LIGHT CONTROL RHEOSTAT**
   (a) Engage the 2 claws and install the light control rheostat.
   (b) Connect the connector.
2. **INSTALL NO. 1 INSTRUMENT PANEL REGISTER ASSEMBLY (See page IP-30)**
3. **CONNECT CABLE TO NEGATIVE BATTERY TERMINAL**
   Torque: 3.9 N*m (40 kgf*cm, 35 in.*lbf)

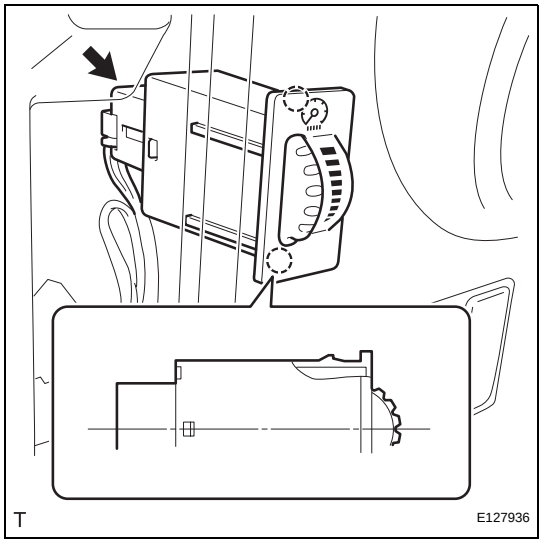

POWER MIRROR CONTROL SYSTEM

PRECAUTION

1. DISCONNECT AND RECONNECT CABLE OF NEGATIVE BATTERY TERMINAL

NOTICE:

When disconnecting the cable from the negative (-) battery terminal, initialize the following systems after the cable is reconnected.

System Name	See procedure
METER / GAUGE SYSTEM	See page ME-10

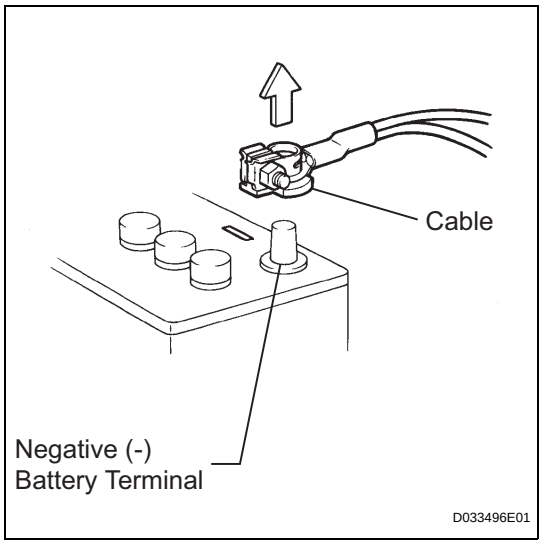

(a) Before performing electronic work, disconnect the cable from the negative (-) battery terminal in order to prevent it from shorting and burning out.

(b) Before disconnecting and reconnecting the battery cable, turn the ignition switch OFF and the headlight dimmer switch OFF. Then loosen the terminal nut completely. Do not damage the cable or terminal.

(c) When the battery cable is disconnected, the clock and radio settings and stored DTCs are erased. Therefore, before disconnecting the battery cable, make a notes of them.

PARTS LOCATION

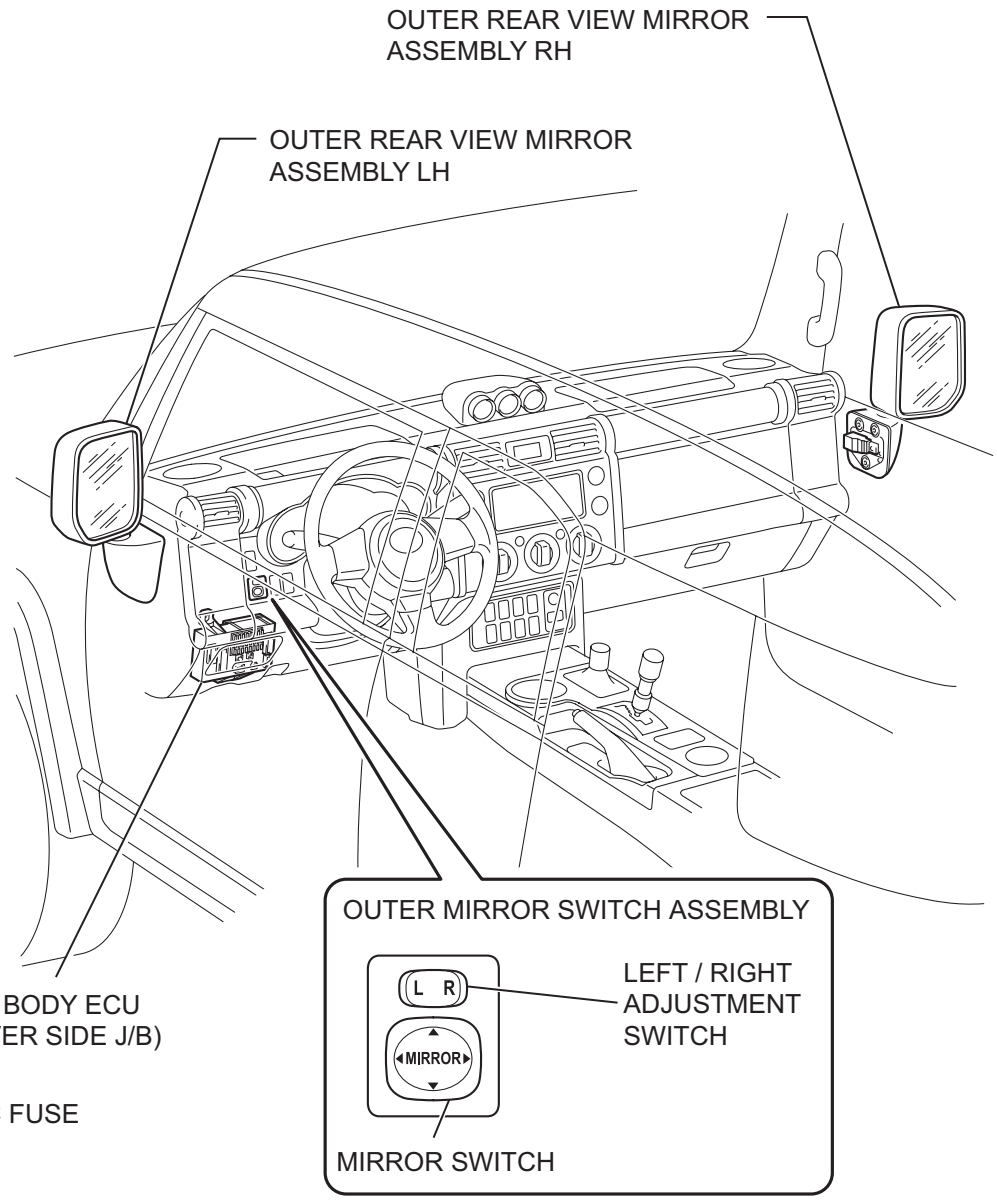

MI

Y

B136057E01

SYSTEM DIAGRAM

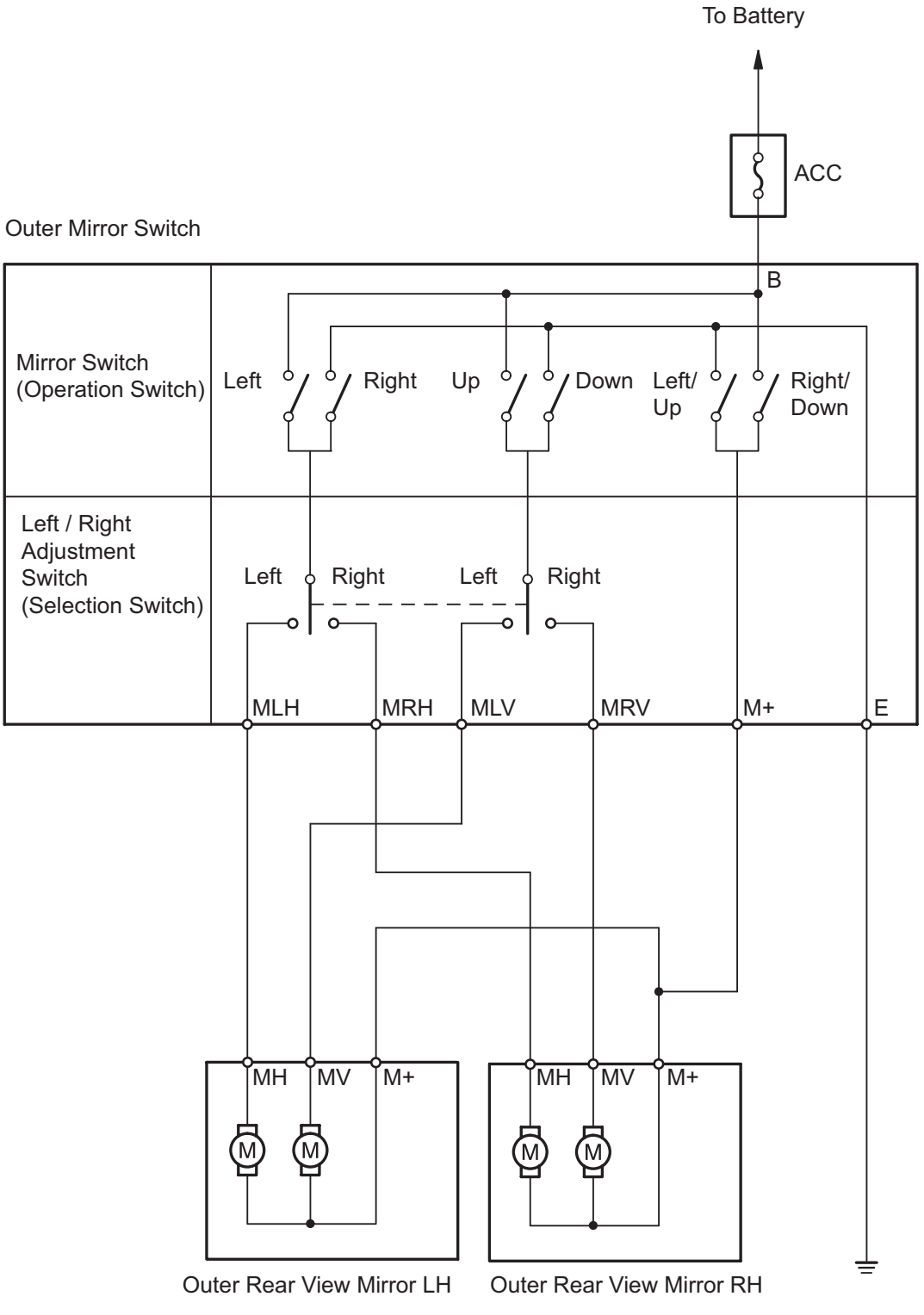

PROBLEM SYMPTOMS TABLE

HINT:
Use the table below to help determine the causes of the problem symptom. The potential causes of the symptoms are listed in order of probability in the "Suspected Area" column of the table. Check each symptom by checking the suspected areas in the order they are listed. Replace parts as necessary.

Power mirror control system

Symptom	Suspected area	See page
Mirror does not operate	ACC fuse	MI-2
	Outer mirror switch assembly	MI-14
	Outer rear view mirror assembly	MI-10
	Wire harness	-
Mirror operates abnormally	Outer mirror switch assembly	MI-14
	Outer rear view mirror assembly	MI-10
	Wire harness	-

INNER REAR VIEW MIRROR

COMPONENTS

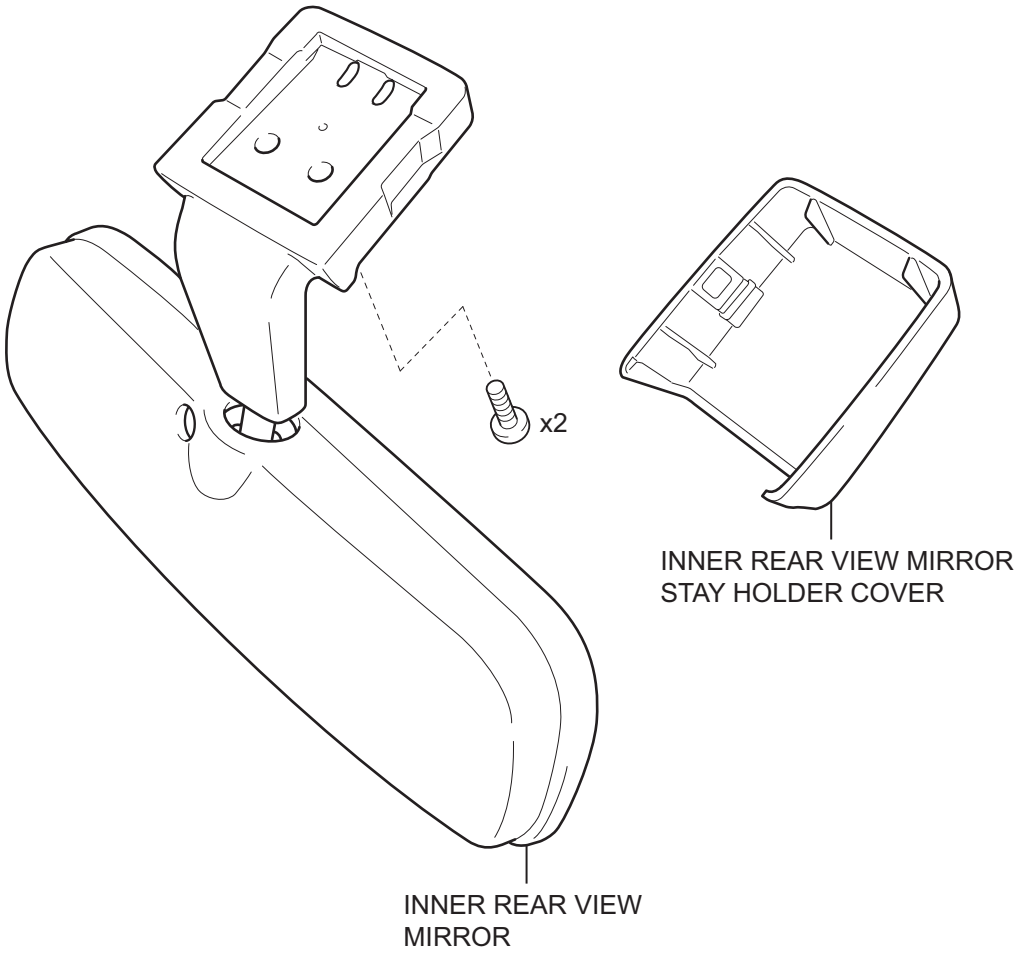

T

B135955E01

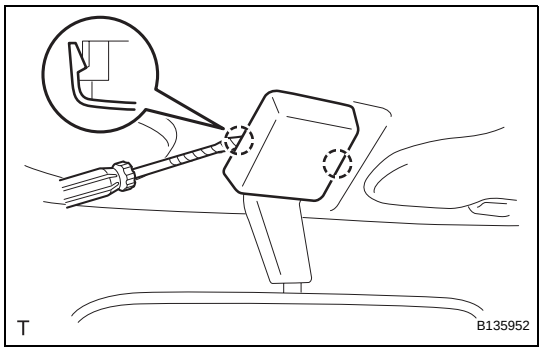

REMOVAL

1. REMOVE INNER REAR VIEW MIRROR STAY HOLDER COVER

(a) Using a screwdriver with its tip wrapped in protective tape, disengage the 2 claws and remove the inner rear view mirror stay holder cover.

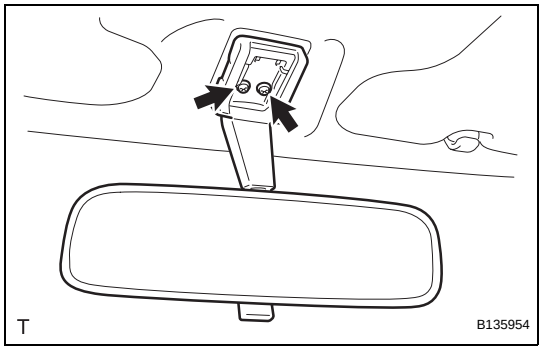

2. REMOVE INNER REAR VIEW MIRROR

(a) Remove the 2 screws and remove the inner rear view mirror.

INSTALLATION

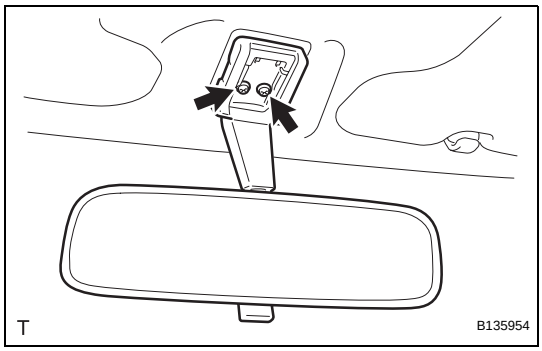

1. INSTALL INNER REAR VIEW MIRROR

(a) Install the inner rear view mirror with the 2 screws.

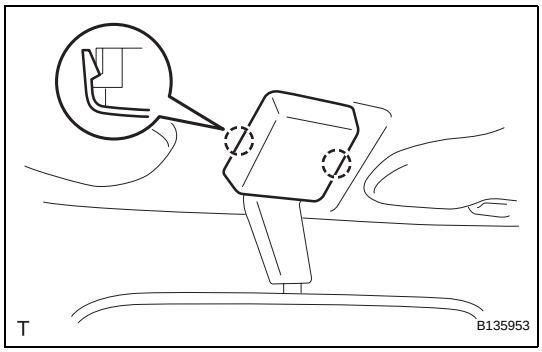

2. INSTALL INNER REAR VIEW MIRROR STAY HOLDER COVER

(a) Engage the 2 claws and install the inner rear view mirror stay holder cover.

OUTER REAR VIEW MIRROR

COMPONENTS

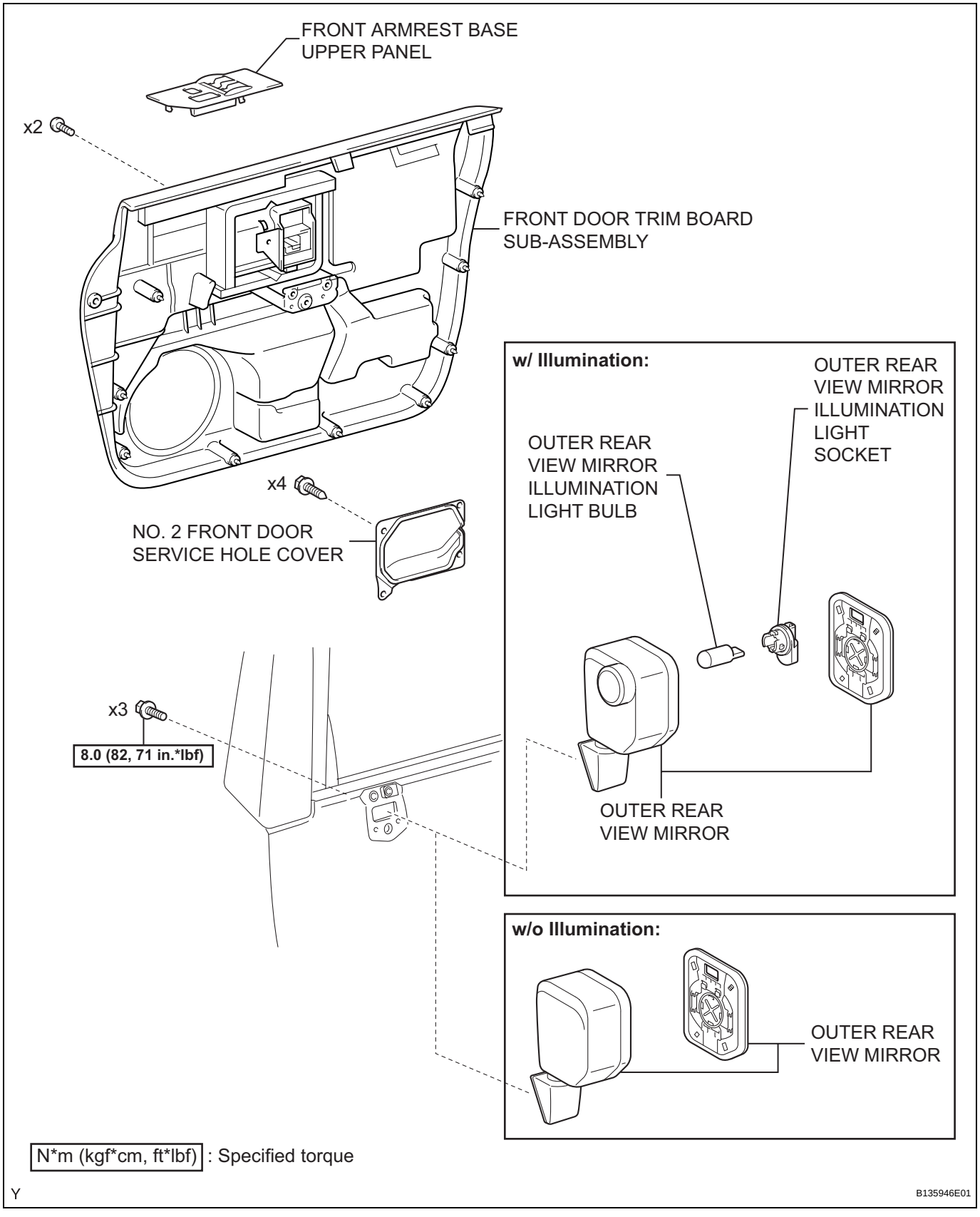

MI

REMOVAL

HINT:

- Use the same procedure for both the RH and LH sides.
- The procedure described below is for the LH side.

1. **DISCONNECT CABLE FROM NEGATIVE BATTERY TERMINAL**
2. **REMOVE FRONT ARMREST BASE UPPER PANEL (See page WS-25)**
3. **REMOVE FRONT DOOR TRIM BOARD SUB-ASSEMBLY**
   HINT:
   Use the same procedure as for the RH side (see page ED-9).
4. **REMOVE NO. 2 FRONT DOOR SERVICE HOLE COVER**
   HINT:
   Use the same procedure as for the RH side (see page ED-10).
5. **REMOVE OUTER REAR VIEW MIRROR**
   (a) Driver side:
   Provisionally install the power window regulator master switch.
   (b) Passenger side:
   Provisionally install the power window regulator switch.
   (c) Close the door glass.
   (d) Disconnect the connector.
   (e) Remove the 3 bolts and the outer rear view mirror.
   NOTICE:
   Do not drop or damage the outer rear view mirror when removing the bolts.

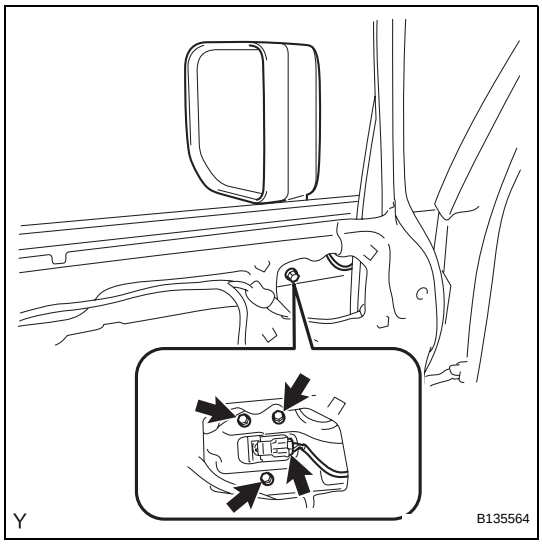

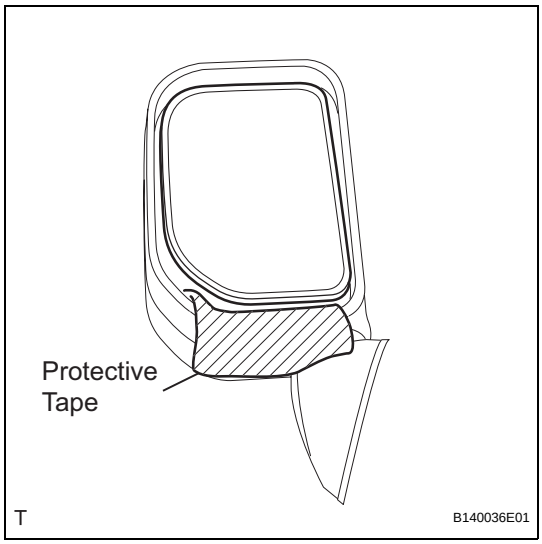

   (f) Apply protective tape to the lower part of the mirror body.
   (g) Press down the upper part of the mirror and tilt the mirror.

MI

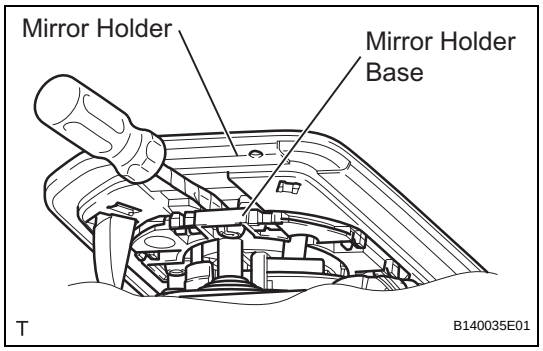

(h) Using a screwdriver with its tip wrapped in protective tape, insert it between the mirror holder and the mirror holder base.

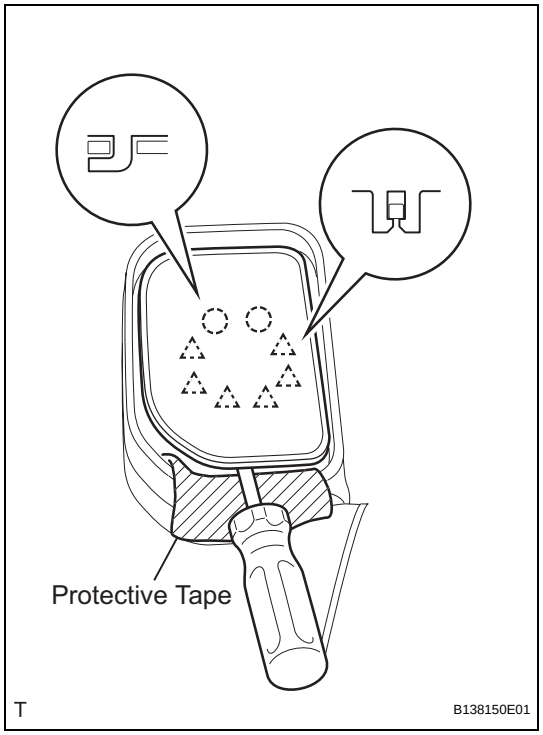

(i) Twist and disengage the 2 clips on the lower side of the mirror.
HINT:
Heating the mirror holder with a domestic dryer before this procedure makes the work easier.
(j) While holding the mirror with the screwdriver, disengage the 4 clips and 2 claws on the upper side of the mirror and remove the mirror.
(k) Driver side:
Remove the power window regulator master switch.
(l) Passenger side:
Remove the power window regulator switch.

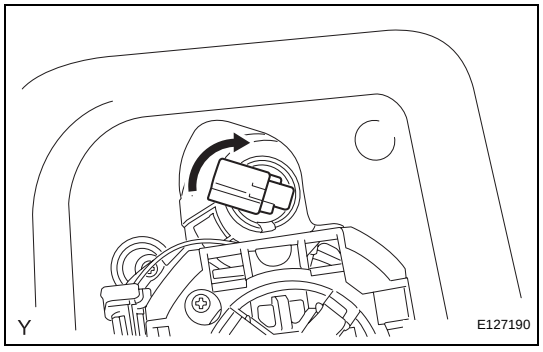

6. REMOVE OUTER REAR VIEW MIRROR ILLUMINATION LIGHT BULB (w/ Illumination)

(a) Turn the outer rear view mirror illumination light socket and bulb, in the direction indicated by the allow in the illustration, to remove them.
(b) Remove the outer rear view mirror illumination light bulb from the light socket.

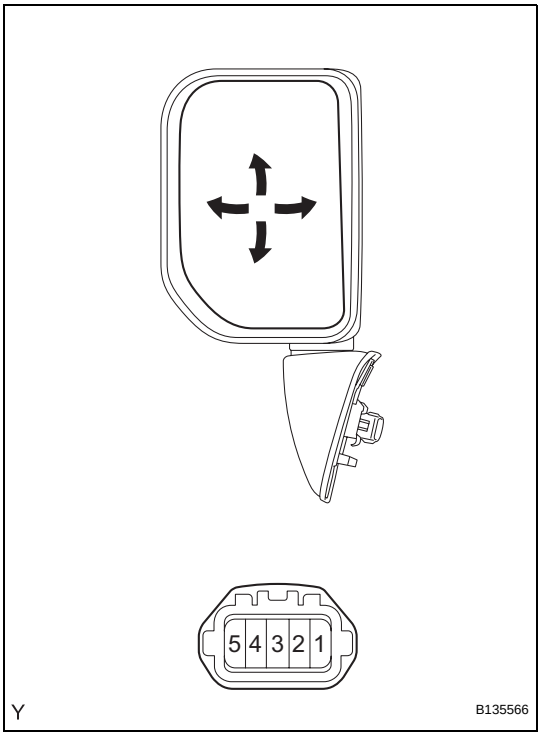

INSPECTION

1. INSPECT OUTER REAR VIEW MIRROR ASSEMBLY LH

(a) Check the operation.

(1) Apply battery voltage to the outer rear view mirror and check the operation of the outer rear view mirror.

Standard

Measurement Condition	Mirror Assembly Operation
Battery positive (+) - Terminal 3 (MV) Battery negative (-) - Terminal 4 (COM)	Turns upward
Battery positive (+) - Terminal 4 (COM) Battery negative (-) - Terminal 3 (MV)	Turns downward
Battery positive (+) - Terminal 5 (MH) Battery negative (-) - Terminal 4 (COM)	Turns left
Battery positive (+) - Terminal 4 (COM) Battery negative (-) - Terminal 5 (MH)	Turns right

If the result is not as specified, replace the outer rear view mirror.

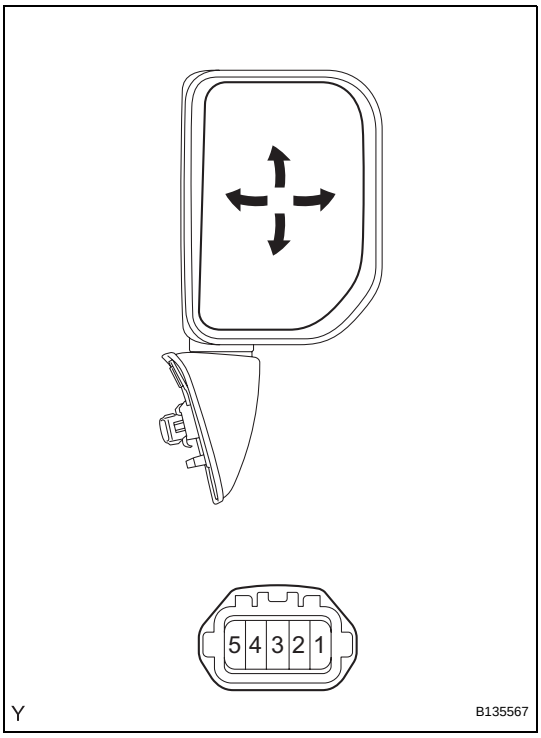

2. INSPECT OUTER REAR VIEW MIRROR ASSEMBLY RH

(a) Check the operation.

(1) Apply battery voltage to the outer rear view mirror and check the operation of the outer rear view mirror.

Standard

Measurement Condition	Mirror Assembly Operation
Battery positive (+) - Terminal 3 (MV) Battery negative (-) - Terminal 4 (COM)	Turns upward
Battery positive (+) - Terminal 4 (COM) Battery negative (-) - Terminal 3 (MV)	Turns downward
Battery positive (+) - Terminal 5 (MH) Battery negative (-) - Terminal 4 (COM)	Turns left
Battery positive (+) - Terminal 4 (COM) Battery negative (-) - Terminal 5 (MH)	Turns right

If the result is not as specified, replace the outer rear view mirror.

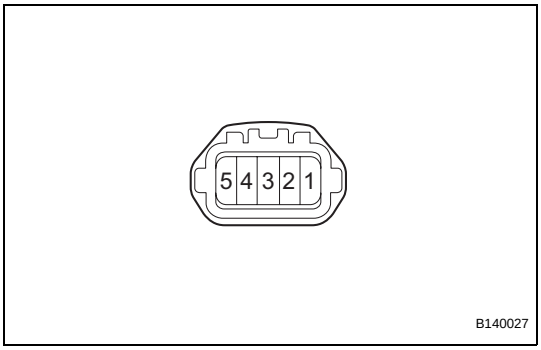

3. INSPECT OUTER REAR VIEW MIRROR ILLUMINATION LIGHT

(a) Check the illumination operation.

(1) Connect the positive (+) battery lead to terminal 2 and the negative (-) battery lead to terminal 1, then check that the illumination illuminates.

Standard:

Illumination illuminates.

If the illumination does not illuminate, check the faulty bulb.

MI

(b) Inspect the bulb.
(1) Inspect continuity of the bulb by connecting the tester.
Standard:
Continuity.
If continuity exists, replace the outer rear view mirror.
If no continuity exists, replace the bulb.

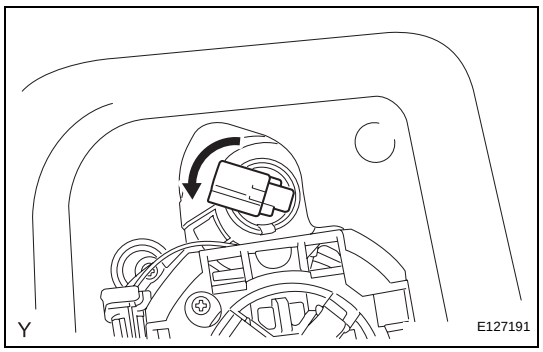

INSTALLATION

1. INSTALL OUTER REAR VIEW MIRROR ILLUMINATION LIGHT BULB (w/ Illumination)
(a) Install the outer rear view mirror illumination light bulb into the light socket.
(b) Turn the outer rear view mirror illumination light socket and bulb, in the direction indicated by the arrow in the illustration, to install them.

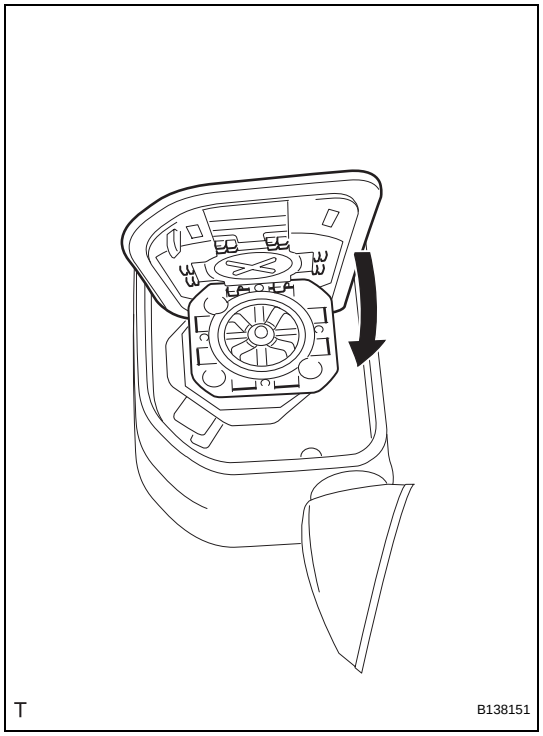

2. INSTALL OUTER REAR VIEW MIRROR
(a) Engage the 2 claws on the upper side of the mirror and the 6 clips and install the mirror.
HINT:
Heating the mirror holder with a domestic dryer before this procedure makes the work easier.

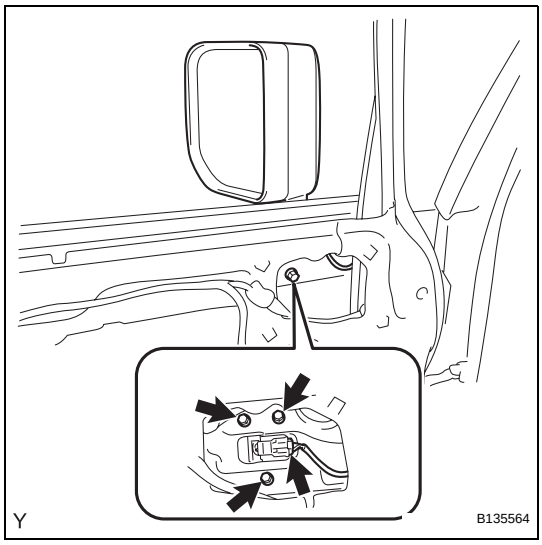

(b) Install the outer rear view mirror with the 3 bolts.
Torque: 8.0 N*m (82 kgf*cm, 71 in.*lbf)
(c) Connect the connector.

3. **INSTALL NO. 2 FRONT DOOR SERVICE HOLE COVER**
HINT:
Use the same procedure as for the RH side (see page ED-24).

4. **INSTALL FRONT DOOR TRIM BOARD SUB-ASSEMBLY**
HINT:
Use the same procedure as for the RH side (see page ED-24).

5. **INSTALL FRONT ARMREST BASE UPPER PANEL (See page WS-27)**

6. **CONNECT CABLE TO NEGATIVE BATTERY TERMINAL**
Torque: 3.9 N*m (40 kgf*cm, 35 in.*lbf)

OUTER MIRROR SWITCH

COMPONENTS

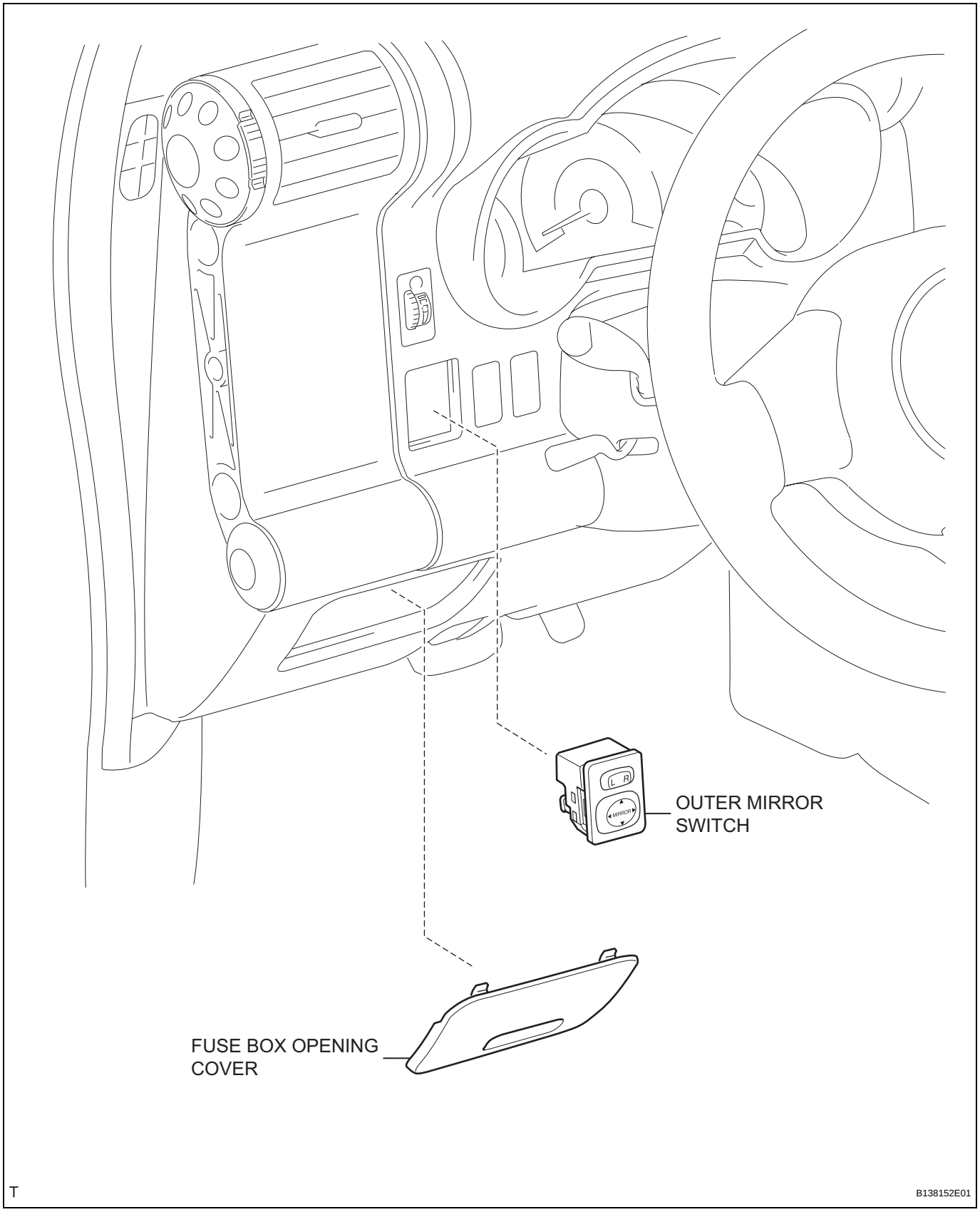

REMOVAL

1. DISCONNECT CABLE FROM NEGATIVE BATTERY TERMINAL

2. REMOVE FUSE BOX OPENING COVER

(a) Disengage the 4 claws and remove the fuse box opening cover.

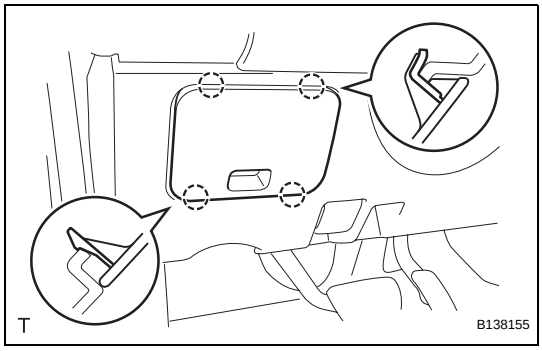

3. REMOVE OUTER MIRROR SWITCH

(a) Using a screwdriver with its tip wrapped in protective tape, disengage the 2 claws and remove the outer mirror switch.

(b) Disconnect the connector.

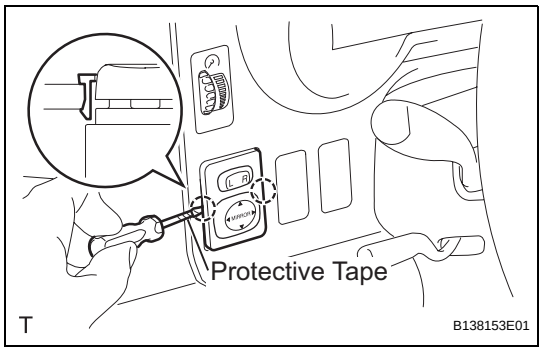

INSPECTION

1. INSPECT OUTER MIRROR SWITCH

(a) Check the resistance.

(1) Select L on the left/right adjustment switch.

(2) Using an ohmmeter, measure the resistance and check the results in accordance with the value(s) in the table below.

Standard Resistance

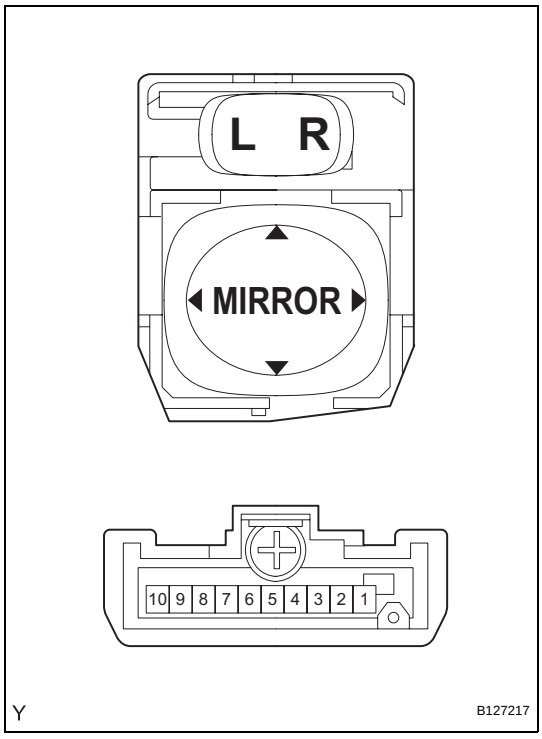

Tester Connection	Condition	Specified Condition
4 (VL) - 7 (E) 4 (VL) - 8 (B) 5 (HL) - 7 (E) 5 (HL) - 8 (B) 6 (M+) - 7 (E) 6 (M+) - 8 (B)	OFF	10 kΩ or higher
4 (VL) - 8 (B) 6 (M+) - 7 (E)	UP	Below 1 Ω
4 (VL) - 7 (E) 6 (M+) - 8 (B)	DOWN	Below 1 Ω
5 (HL) - 8 (B) 6 (M+) - 7 (E)	LEFT	Below 1 Ω
5 (HL) - 7 (E) 6 (M+) - 8 (B)	RIGHT	Below 1 Ω

If the result is not as specified, replace the outer mirror switch.

(3) Select R on the left/right adjustment switch.

MI

(4) Using an ohmmeter, measure the resistance and check the results in accordance with the value(s) in the table below.

Standard Resistance

Tester Connection	Condition	Specified Condition
2 (HR) - 7 (E) 4 (HR) - 8 (B) 3 (VR) - 7 (E) 3 (VR) - 8 (B) 6 (M+) - 7 (E) 6 (M+) - 8 (B)	OFF	10 kΩ or higher
3 (VR) - 8 (B) 6 (M+) - 7 (E)	UP	Below 1 Ω
3 (VR) - 7 (E) 6 (M+) - 8 (B)	DOWN	Below 1 Ω
2 (HR) - 8 (B) 6 (M+) - 7 (E)	LEFT	Below 1 Ω
2 (HR) - 7 (E) 6 (M+) - 8 (B)	RIGHT	Below 1 Ω

If the result is not as specified, replace the outer mirror switch.

INSTALLATION

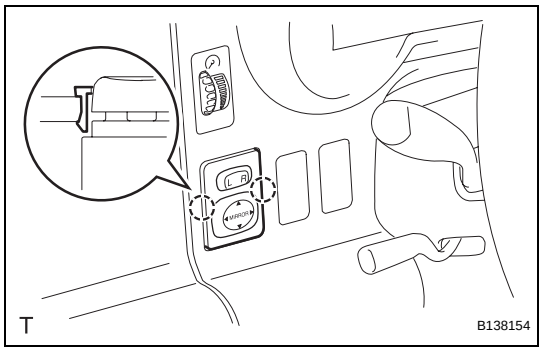

1. INSTALL OUTER MIRROR SWITCH

(a) Connect the connector.

(b) Engage the 2 claws and install the outer mirror switch.

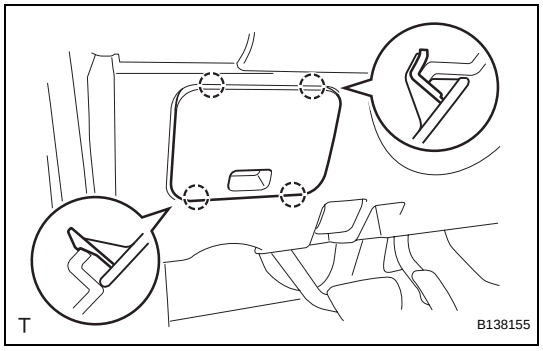

2. INSTALL FUSE BOX OPENING COVER

(a) Engage the 4 claws and install the fuse box opening cover.

3. CONNECT CABLE TO NEGATIVE BATTERY TERMINAL

Torque: 3.9 N*m (40 kgf*cm, 35 in.*lbf)

MULTIPLEX COMMUNICATION SYSTEM

PRECAUTION

1. DISCONNECT AND RECONNECT CABLE OF NEGATIVE BATTERY TERMINAL

NOTICE:

When disconnecting the cable from the negative (-) battery terminal, initialize the following systems after the cable is reconnected.

System Name	See procedure
METER / GAUGE SYSTEM	See page ME-10

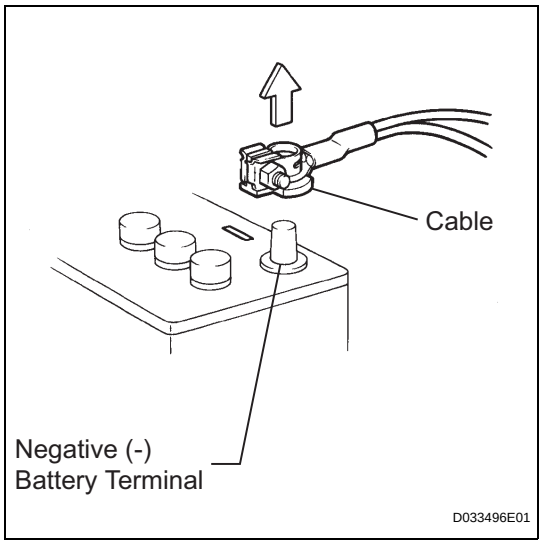

(a) Before performing electronic work, disconnect the cable from the negative (-) battery terminal in order to prevent it from shorting and burning out.

(b) Before disconnecting and reconnecting the battery cable, turn the ignition switch OFF and the headlight dimmer switch OFF. Then loosen the terminal nut completely. Do not damage the cable or terminal.

(c) When the battery cable is disconnected, the clock and radio settings and stored DTCs are erased. Therefore, before disconnecting the battery cable, make a notes of them.

PARTS LOCATION

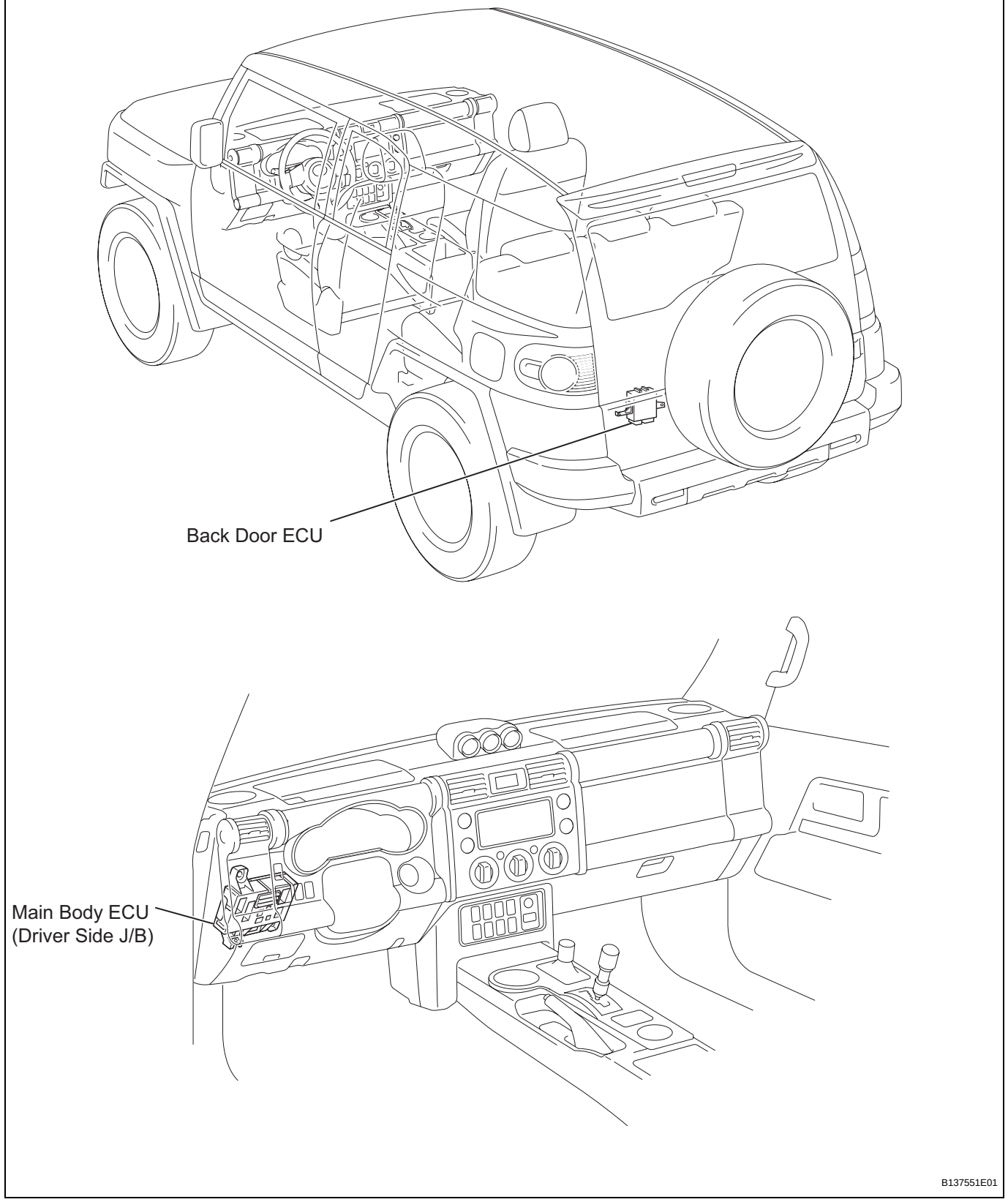

SYSTEM DIAGRAM

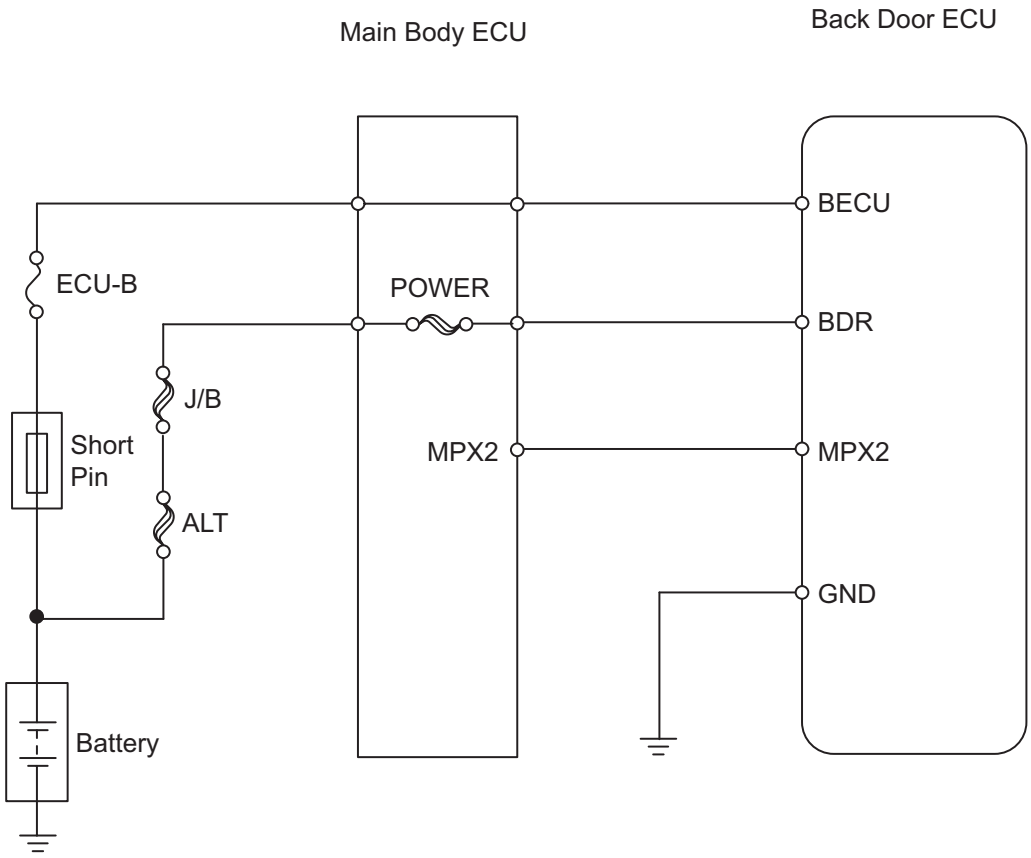

SYSTEM DESCRIPTION

1. MULTIPLEX COMMUNICATION SYSTEM (BEAN)

(a) The BEAN communication line consists of 2 systems: One is a system with a loop-shaped line that links the back door ECU with the main body ECU, which is located in the center of the line. Since the line for the back door ECU is loop-shaped, communication can be maintained by the line that is not open even if part of the line becomes open for some reason. In the case that there is a short-circuit (bus-down) in the line, however, all the BEAN communication becomes impossible in the system and some DTCs are output.
HINT:
- When bus-down occurs, communication from the related ECU stops. Therefore, DTCs cannot be output, so perform a DTC (SAE code) inspection using the intelligent tester.
- The back door ECU has a single communication line. Therefore, if the line has a short-circuit (bus-down), the BEAN communication will be impossible and DTCs will not be output, either.

2. CHECK COMMUNICATION FUNCTION

(a) Check the battery voltage.
Standard voltage:
11 to 14 V

(b) Inspect the DTC output.
(1) Check for DTCs concerning the main body ECU by connecting the intelligent tester to the DLC3 and turning the ignition switch ON.
(2) When the display shows DTCs concerning the ECU being unconnected and the communication bus defective, perform the inspection depending on the troubleshooting procedures.
HINT:
When other DTCs are output, refer to the DTC table and check the applicable section.

HOW TO PROCEED WITH TROUBLESHOOTING

HINT:

- Use this procedure to troubleshoot the multiplex communication system.
- The intelligent tester should be used in step 2.

1 VEHICLE BROUGHT TO WORKSHOP

NEXT

2 CHECK FOR DTC

(a) Check for DTCs and note any codes that are output.
(b) Delete the DTC.
(c) Recheck for DTCs. Try to prompt the DTC by simulating the original activity that the DTC suggests.

Result

Result	Proceed to
DTC does not recur	A
DTC recurs	B

B → **GO TO DTC CHART**

A

3 OVERALL ANALYSIS AND TROUBLESHOOTING

(a) Terminals of ECU (See page MP-6).

NEXT

4 ADJUST, REPAIR OR REPLACE

NEXT

5 CONFIRMATION TEST

NEXT

END

TERMINALS OF ECU

1. CHECK MAIN BODY ECU

(a) Disconnect the 1B, 1E, 1F, 1L and E6 main body ECU connectors.

Main Body ECU:

Left View:

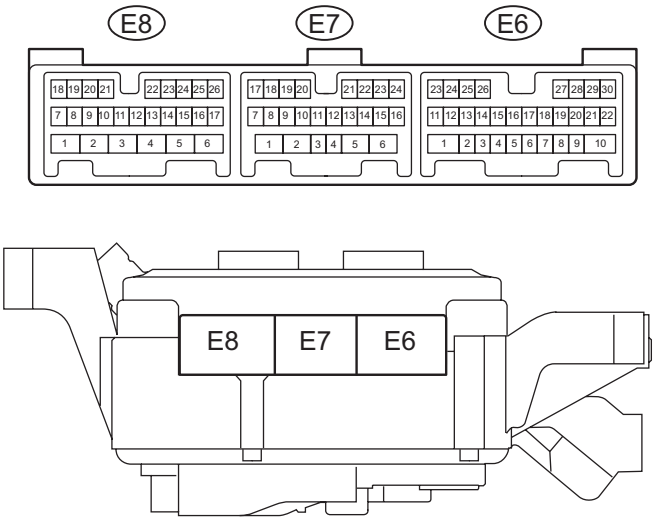

Rear View:

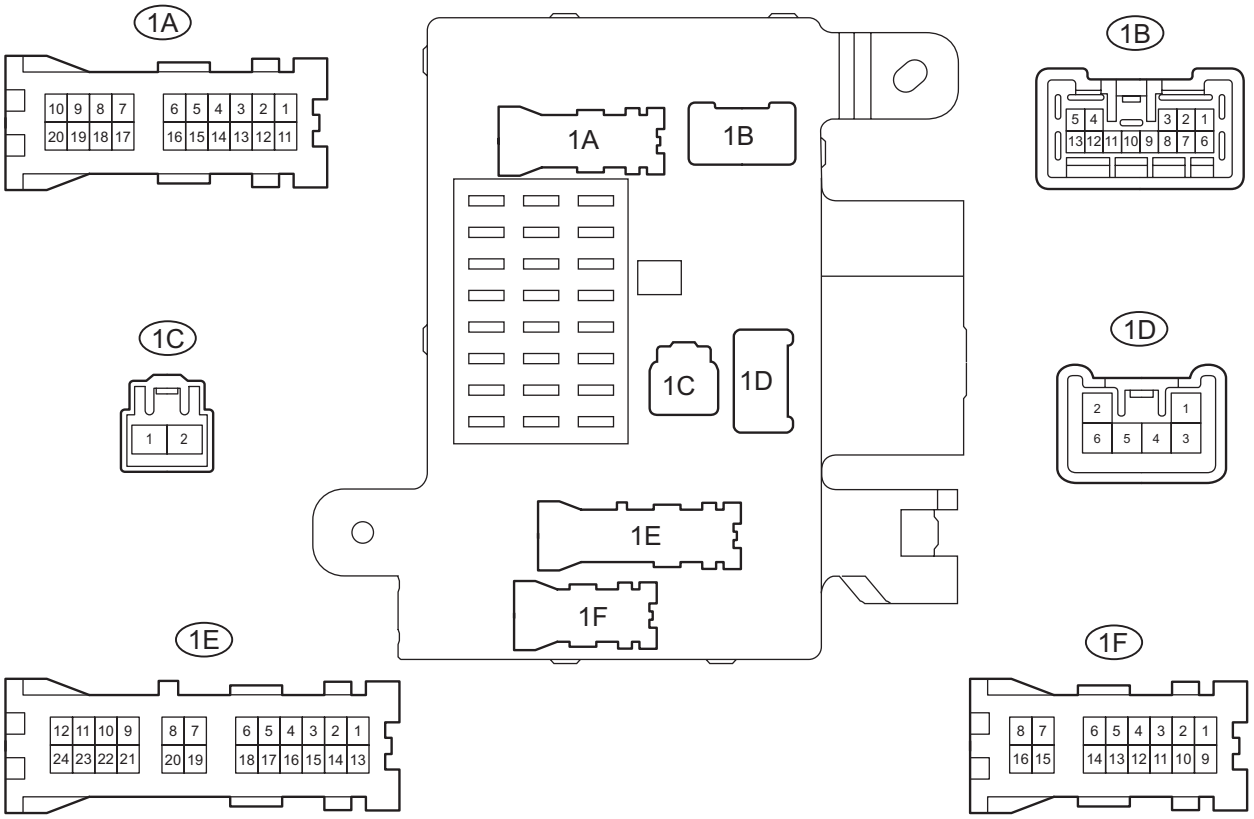

Y

B136051E02

Main Body ECU: **Front View:**

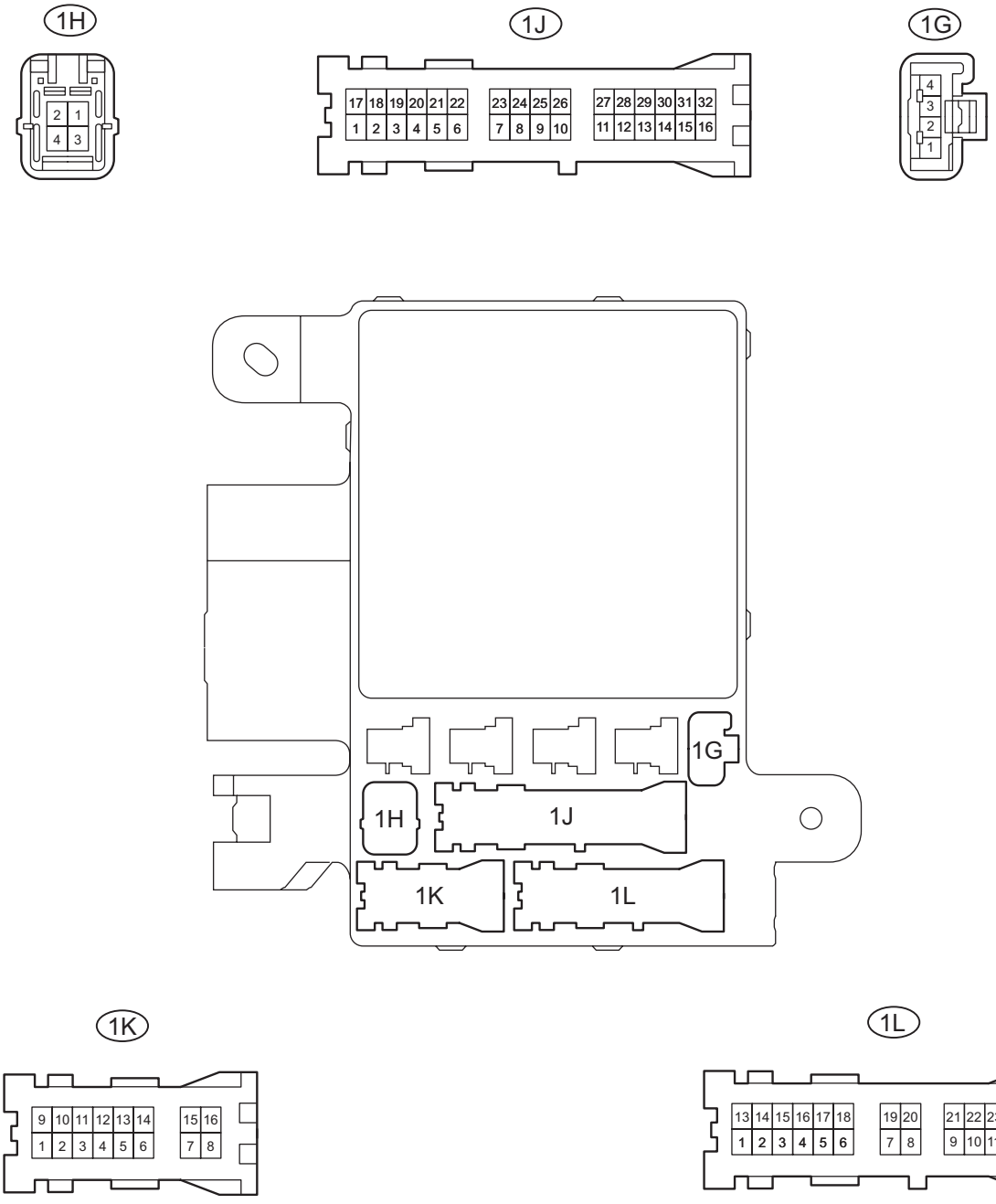

Y

B136052E02

MP

(b) Measure the voltage of the wire harness side connectors.

Standard voltage:

Symbols (Terminals No.)	Wiring Color	Terminal Description	Condition	Specified Condition
BECU (1B-4) - Body ground	W-R - Body ground	Power source (+B)	Always	11 to 14 V
BECU (1L-4) - Body ground	W-R - Body ground	Power source (+B)	Always	11 to 14 V
BECU (1F-12) - Body ground	W-R - Body ground	Power source (+B)	Always	11 to 14 V
BDR1 (1E-9) - Body ground	B-Y - Body ground	Power source (+B)	Always	11 to 14 V
MPX2 (E6-23) - Body ground	BR-R - Body ground	Multiplex communication signal	During communication	Signal waveform

If the result is not as specified, there may be a malfunction on the wire harness side.

2. CHECK BACK DOOR ECU

(a) Disconnect the S2 ECU connector.

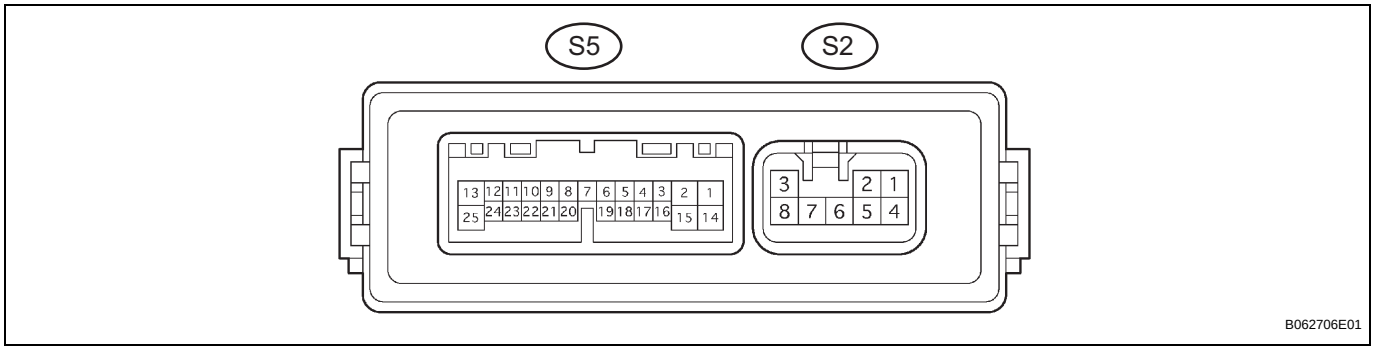

(b) Measure the voltage of the wire harness side connector.

Standard voltage:

Symbols (Terminals No.)	Wiring Color	Terminal Description	Condition	Specified Condition
GND (S2-3) - Body ground	W-B - Body ground	Ground for main power supply	Ground for main power supply	Below 1 V
BECU (S2-5) - GND (S2-3)	W-R - W-B	Power source (+B)	Always	11 to 14 V
BDR (S2-4) - GND (S2-3)	L-O - W-B	Power source (+B)	Always	11 to 14 V
MPX2 (S2-1) - Body ground	BR-R - Body ground	Multiplex communication signal	During communication	Signal waveform
SIG (S2-6) - Body ground	B-R - Body ground	Power source (IG)	Ignition switch ON	11 to 14 V

If the result is not as specified, there may be a malfunction on the wire harness side.

DIAGNOSIS SYSTEM

1. DESCRIPTION

(a) The main body ECU controls the functions of the multiplex communication system on the vehicle. Data of the multiplex communication system and the Diagnostic Trouble Codes (DTC) can be read through the Data Link Connector 3 (DLC3) of the vehicle.

2. CHECK DLC3

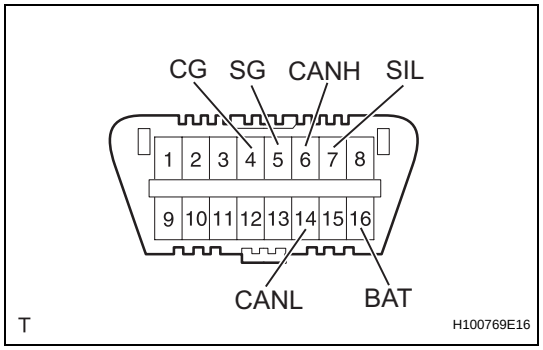

(a) The ECU uses ISO 15765-4 for communication. The terminal arrangement of the DLC3 complies with ISO 15031-3 and matches the ISO 15765-4 format.

Symbols (Terminal No.)	Terminal Description	Condition	Specified Condition
SIL (7) - SG (5)	Bus "+" line	During transmission	Pulse generation
CG (4) - Body ground	Chassis ground	Always	Below 1 Ω
SG (5) - Body ground	Signal ground	Always	Below 1 Ω
BAT (16) - Body ground	Battery positive	Always	11 to 14 V
CANH (6) - CANL (14)	HIGH-level CAN bus line	Ignition switch OFF*	54 to 69 Ω
CANH (6) - CG (4)	HIGH-level CAN bus line	Ignition switch OFF*	200 Ω or more
CANL (14) - CG (4)	LOW-level CAN bus line	Ignition switch OFF*	200 Ω or more
CANH (6) - BAT (16)	HIGH-level CAN bus line	Ignition switch OFF*	6 kΩ or more
CANL (14) - BAT (16)	LOW-level CAN bus line	Ignition switch OFF*	6 kΩ or more

CAUTION:

***: Before measuring the resistance, leave the vehicle as is for at least 1 minute and do not operate the ignition switch, any other switches or the doors.**

If the result is not as specified, the DLC3 may have a malfunction. Repair or replace the harness and connector.

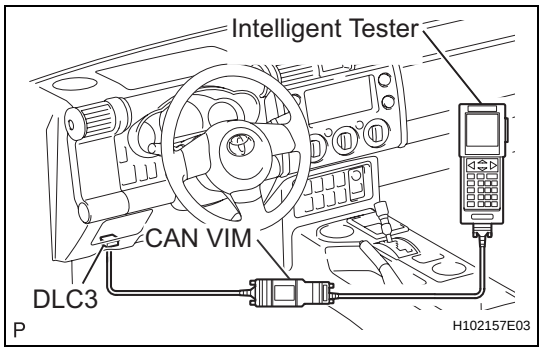

(b) Intelligent tester

HINT:

Connect the cable of the intelligent tester to the CAN VIM, connect the CAN VIM to the DLC3, turn the ignition switch ON and attempt to use the tester. If the display indicates that a communication error has occurred, there is a problem either with the vehicle or with the tester.

- If communication is normal when the tester is connected to another vehicle, inspect the DLC3 of the original vehicle.

- If communication is still not possible when the tester is connected to another vehicle, the problem may be in the tester itself. Consult the Service Department listed in the tester's instruction manual.

3. INSPECT BATTERY VOLTAGE

Standard voltage:

11 to 14 V

If the voltage is below 11 V, recharge or replace the battery before proceeding.

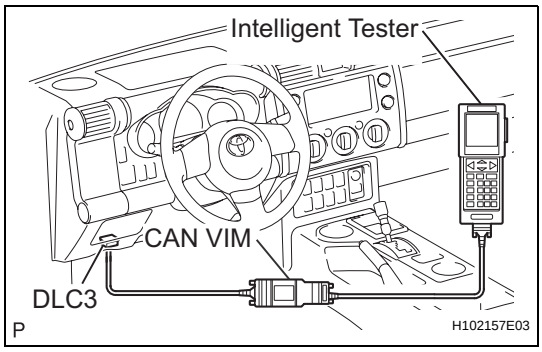

DTC CHECK / CLEAR

1. CHECK DTC

(a) Connect the intelligent tester to the DLC3.
(b) Turn the ignition switch ON.
(c) Enter the following menus: DIAGNOSIS/OBD/MOBD/BODY/DTC INFO.
(d) Check the DTCs on the tester screen.
HINT:
Refer to the intelligent tester operator's manual for further details.

2. CLEAR DTC

(a) Connect the intelligent tester to the DLC3.
(b) Turn the ignition switch ON.
(c) Erase the DTCs by following the prompts on the tester screen.
(d) Enter the following menus: DIAGNOSIS/OBD/MOBD/BODY/DTC INFO.
HINT:
Refer to the intelligent tester operator's manual for further details.

DIAGNOSTIC TROUBLE CODE CHART

HINT:
If a malfunction code is displayed during the DTC check, check the circuit corresponding to the code in the table below. Proceed to the page given for the circuit.

MULTIPLEX COMMUNICATION SYSTEM

DTC No.	Detection Item	Trouble area	See page
B1214	Short to B+ in Door System Communication Bus Malfunction	1. Back door ECU 2. Main Body ECU 3. Wire Harness	MP-11
B1215	Short to GND in Door System Communication Bus Malfunction	1. Back door ECU 2. Main Body ECU 3. Wire Harness	MP-11
B1287	Back Door ECU Communication Stop	1. Back door ECU 2. Wire Harness	MP-14

DTC	B1214	Short to B+ in Door System Communication Bus Malfunction

DTC	B1215	Short to GND in Door System Communication Bus Malfunction

DESCRIPTION

When a +B short circuit or body ground short circuit is detected on the communication bus (BEAN), BEAN is disabled and a DTC is output.

DTC No.	DTC Detection Condition	Trouble Area
B1214	Communication circuit and +B battery system short	• Back door ECU • Main body ECU • Wire harness
B1215	Door system communication circuit and body ground short	• Back door ECU • Main body ECU • Wire harness

WIRING DIAGRAM

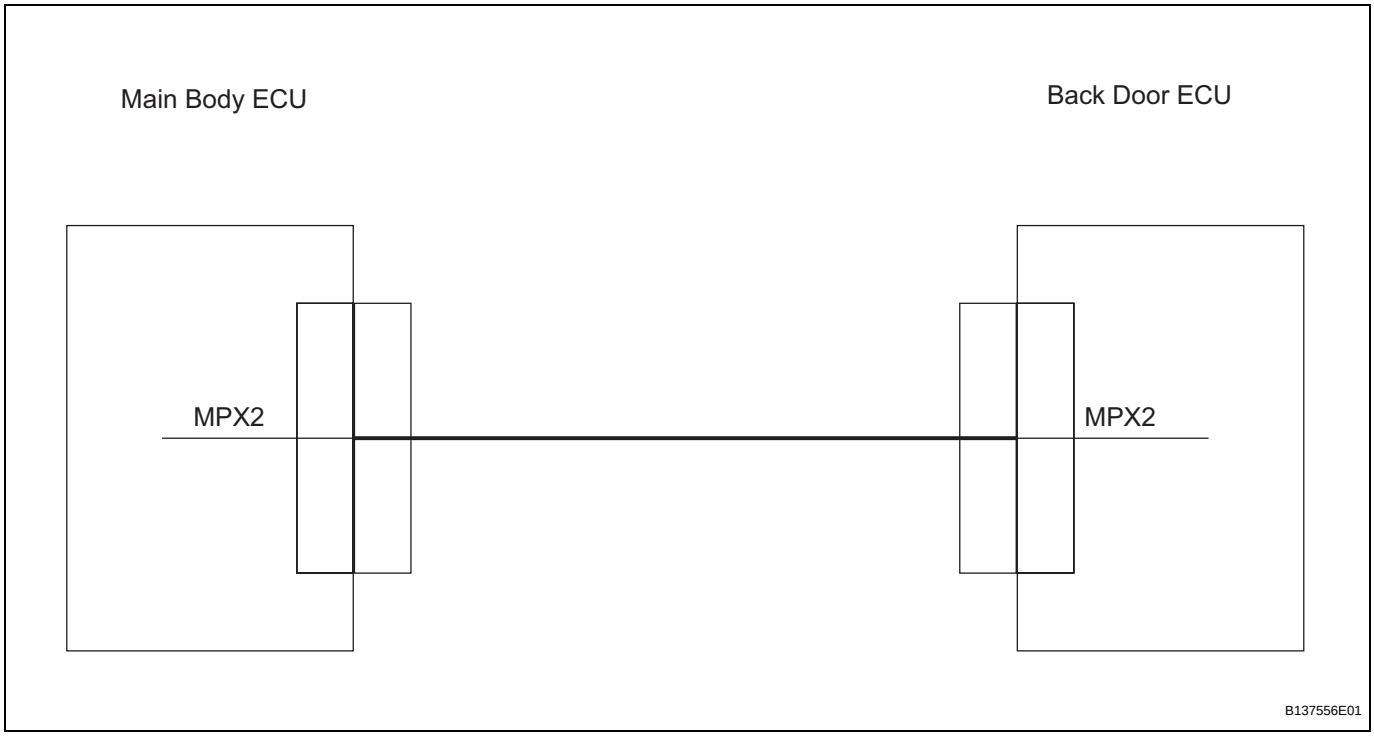

INSPECTION PROCEDURE

1	CHECK DIAGNOSTIC TROUBLE CODE (BACK DOOR ECU)

(a) Disconnect the back door ECU connector and check for DTCs B1214 and B1215.

MP

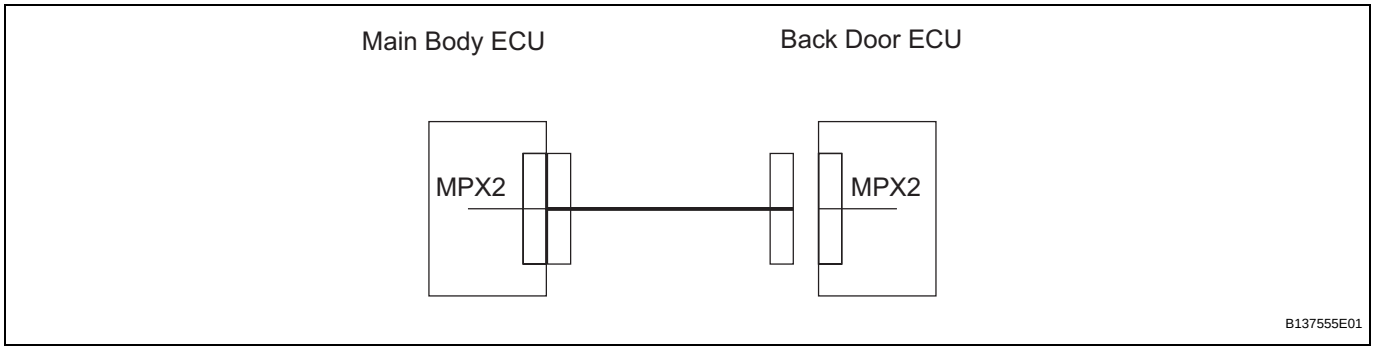

OK:
Neither DTC B1214 nor DTC B1215 is output.
NOTICE:
Disconnect the connector in the operational sequence, and start the next step after the connector is reconnected.

OK → **REPLACE BACK DOOR ECU**

NG

2	CHECK HARNESS AND CONNECTOR (MAIN BODY ECU - BACK DOOR ECU)

(a) Check for a short-circuit in B+ or body ground.

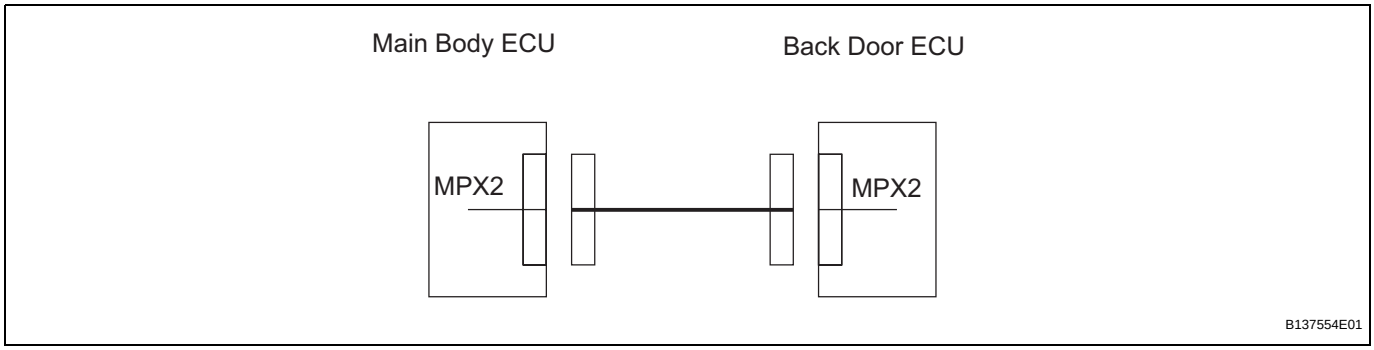

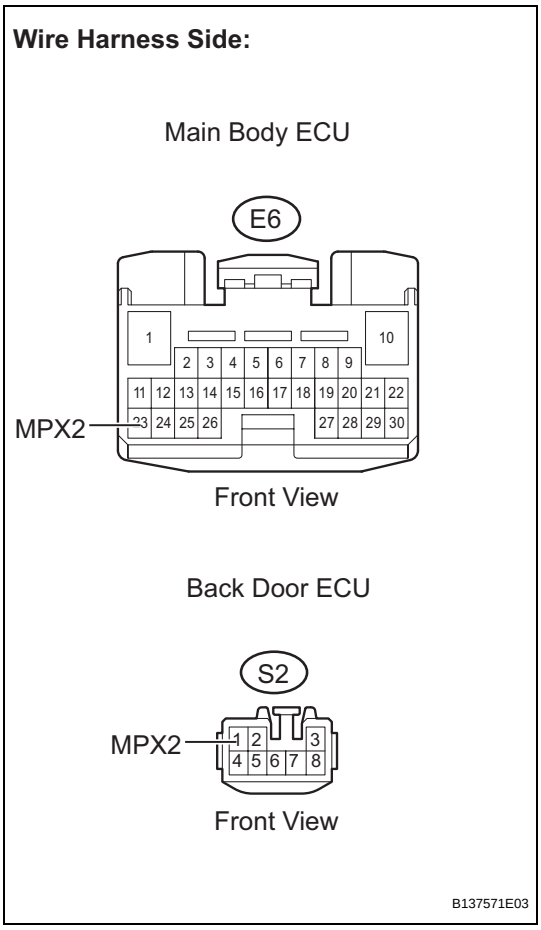

(b) Disconnect the S2 back door ECU connector and E6 main body ECU connector.

(1) Measure the voltage between the terminals of the S2 back door ECU or E6 main body ECU connector and body ground.

Standard voltage

Tester Connection	Condition	Specified Condition
E6-23 (MPX2) or S2-1 (MPX2) - Body ground	Ignition switch ON	Below 1 V

(2) Check the resistance.

Standard resistance

Tester Connection	Specified Condition
E6-23 (MPX2) or S2-1 (MPX2) - Body ground	10 kΩ or higher

(c) Reconnect the back door ECU connector and main body ECU connector.

NG → **REPAIR OR REPLACE WIRE HARNESS BETWEEN MAIN BODY ECU AND BACK DOOR ECU**

OK

REPLACE MAIN BODY ECU

DTC	B1287	Back Door ECU Communication Stop

DESCRIPTION

DTC B1287 is output when communication between the back door ECU and the main body ECU stops for more than 10 seconds.

DTC No.	DTC Detection Condition	Trouble Area
B1287	Back door ECU communication stops	• Back door ECU • Wire harness

WIRING DIAGRAM

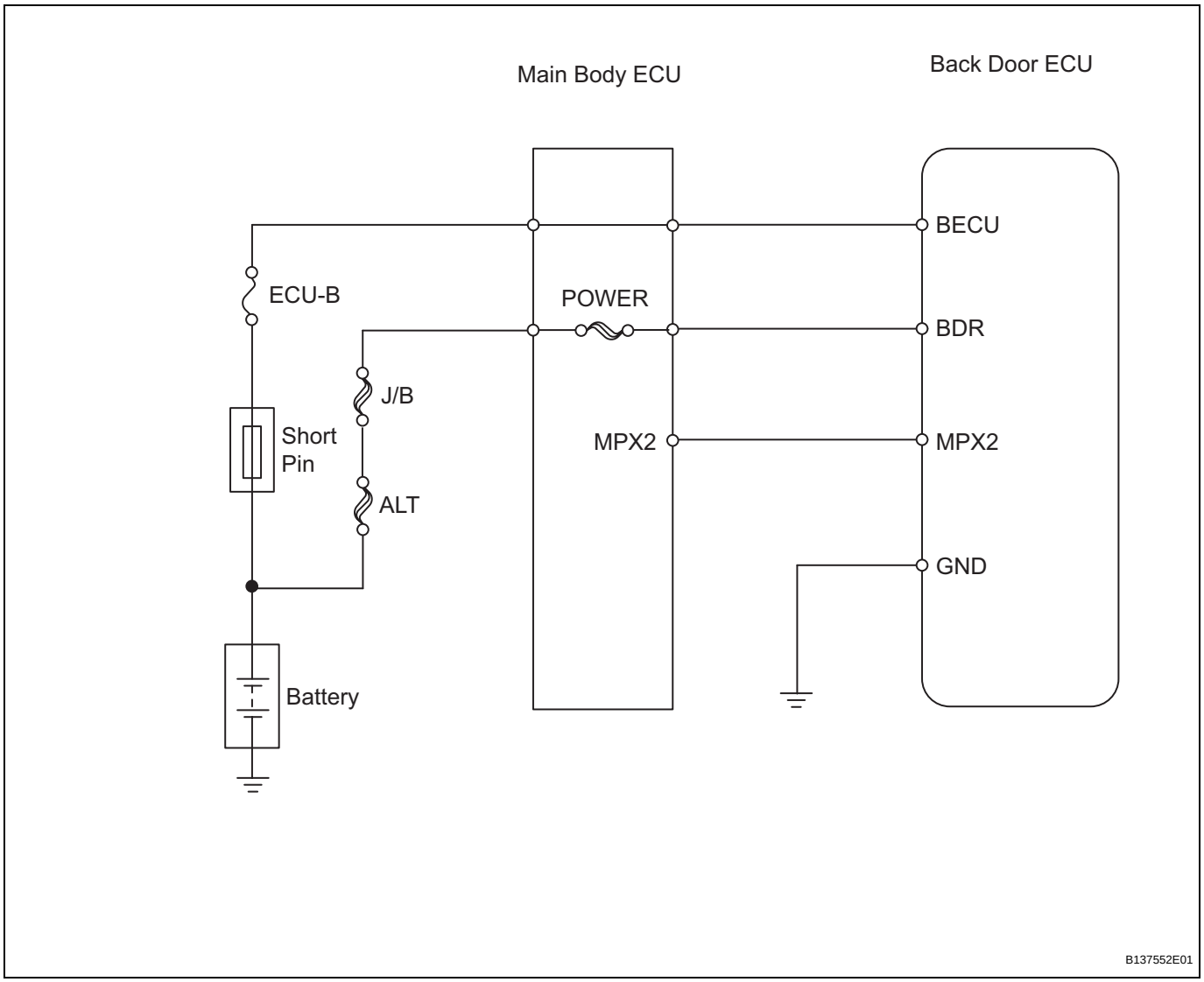

INSPECTION PROCEDURE

1 CHECK COMMUNICATION LINE

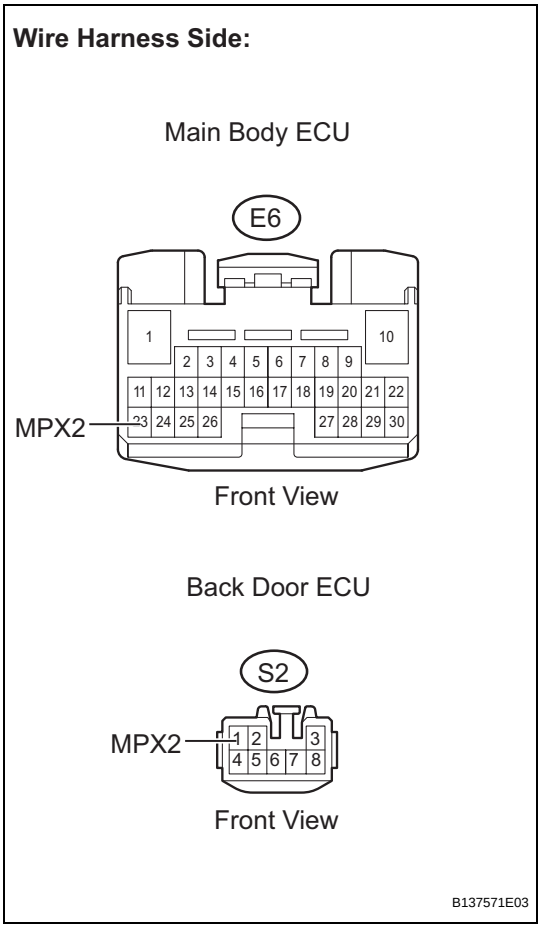

(a) Disconnect the E6 main body ECU and S2 back door ECU connectors.
(b) Check the resistance.
Standard resistance

Tester Connection	Specified Condition
E6-23 (MPX2) - S2-1 (MPX2)	Below 1 Ω

(c) Reconnect the main body ECU and back door ECU connectors.

NG → **REPAIR OR REPLACE HARNESS OR CONNECTOR**

OK

2 CHECK BACK DOOR ECU (POWER SOURCE)

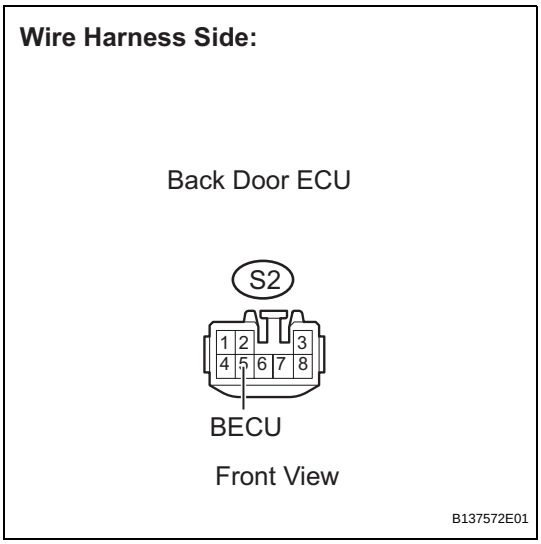

(a) Disconnect the S2 back door ECU connector.
(b) Measure the voltage between the terminals of the S2 back door ECU connector and body ground.
Standard voltage

Tester Connection	Specified Condition
S2-5 (BECU) - Body ground	11 to 14 V

(c) Reconnect the ECU connector.

NG → **REPAIR OR REPLACE HARNESS OR CONNECTOR**

OK

3	CHECK BACK DOOR ECU (GROUND)

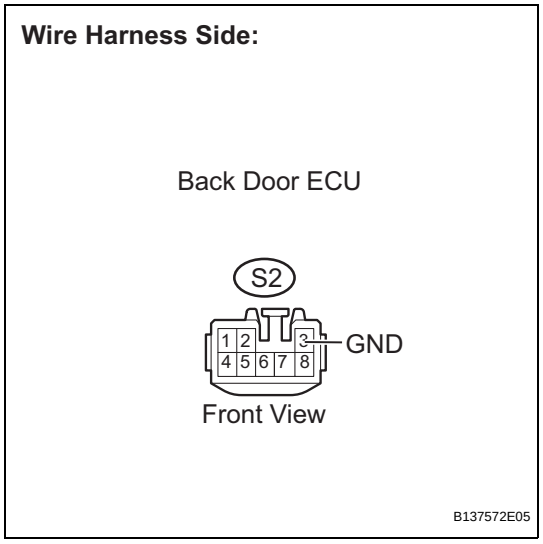

(a) Disconnect the S2 back door ECU connector.
(b) Check the resistance.
Standard resistance

Tester Connection	Specified Condition
S2-3 (GND) - Body ground	Below 1 Ω

(c) Reconnect the ECU connector.

NG → **REPAIR OR REPLACE HARNESS OR CONNECTOR**

OK

REPLACE BACK DOOR ECU

CLEARANCE SONAR SYSTEM

PRECAUTION

1. DISCONNECT AND RECONNECT CABLE OF NEGATIVE BATTERY TERMINAL

NOTICE:

When disconnecting the cable from the negative (-) battery terminal, initialize the following systems after the cable is reconnected.

System Name	See procedure
METER / GAUGE SYSTEM	See page ME-10

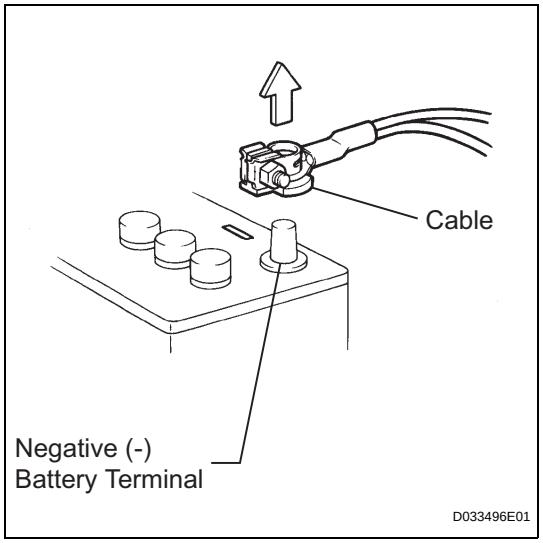

(a) Before performing electronic work, disconnect the cable from the negative (-) battery terminal in order to prevent it from shorting and burning out.

(b) Before disconnecting and reconnecting the battery cable, turn the ignition switch OFF and the headlight dimmer switch OFF. Then loosen the terminal nut completely. Do not damage the cable or terminal.

(c) When the battery cable is disconnected, the clock and radio settings and stored DTCs are erased. Therefore, before disconnecting the battery cable, make a notes of them.

PARTS LOCATION

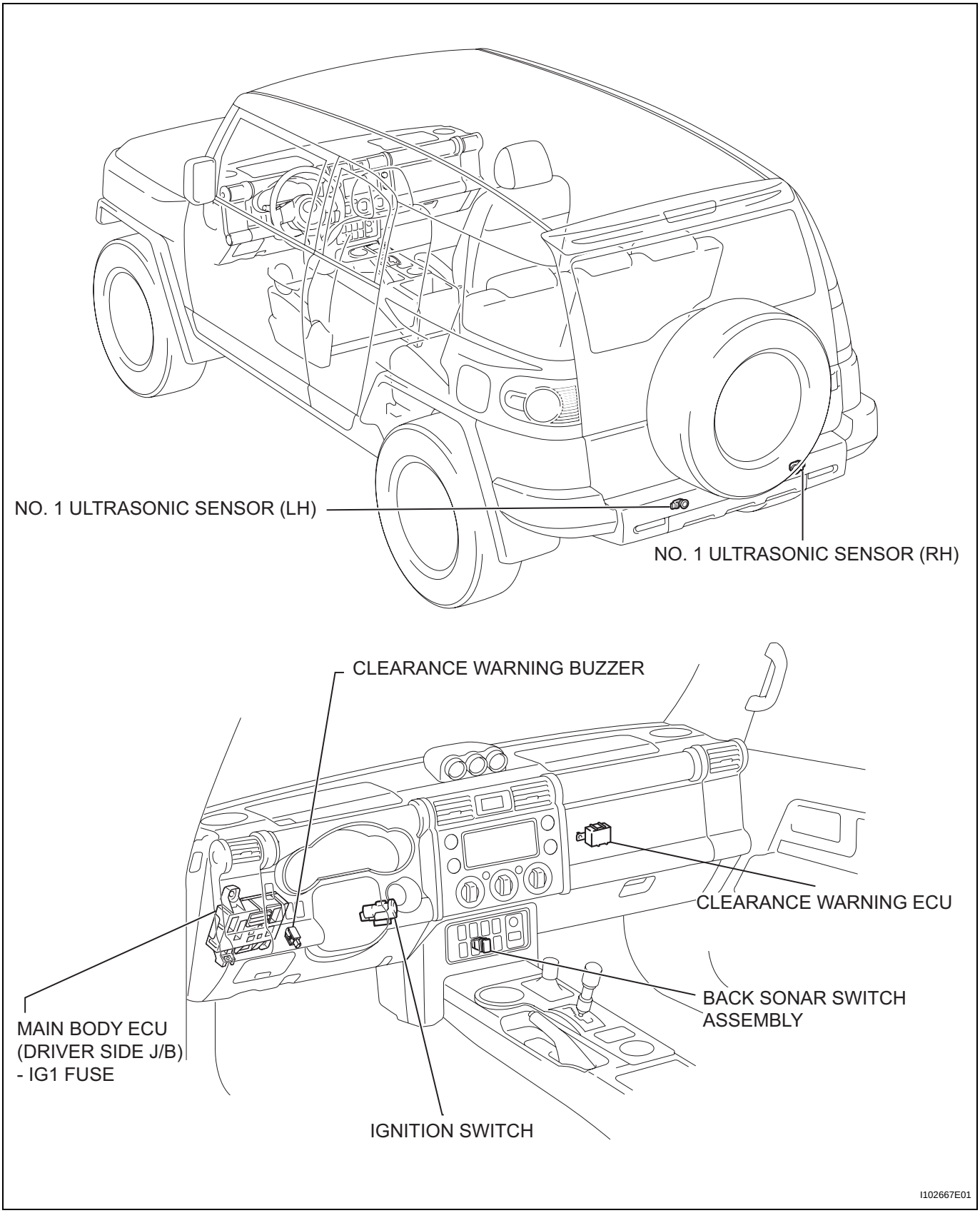

PM

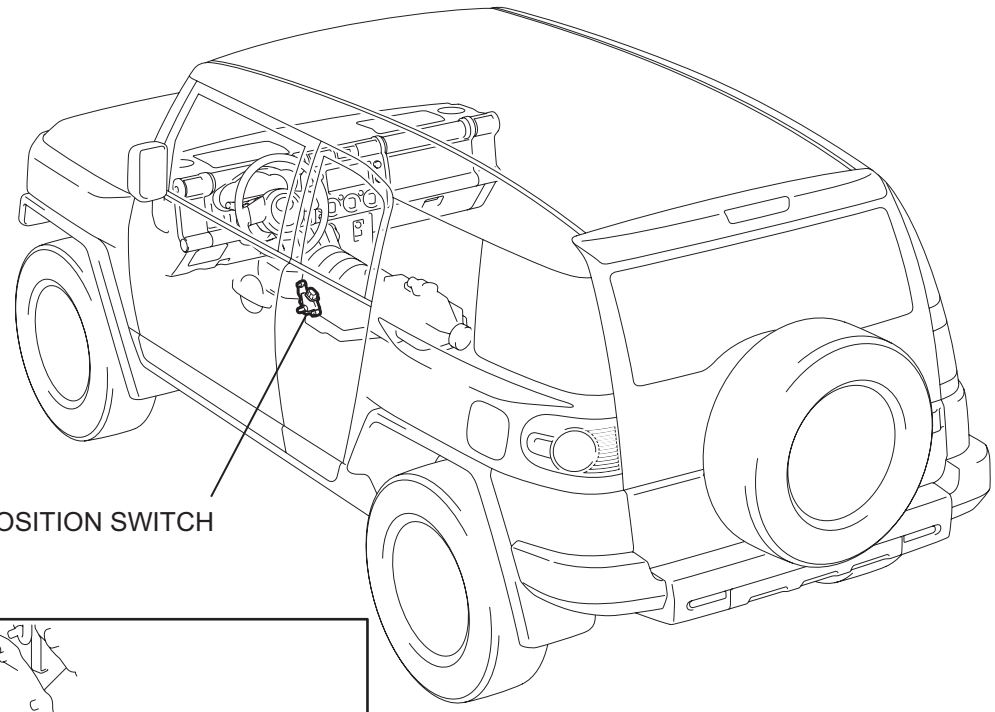

FOR A/T:

PARK / NEUTRAL POSITION SWITCH

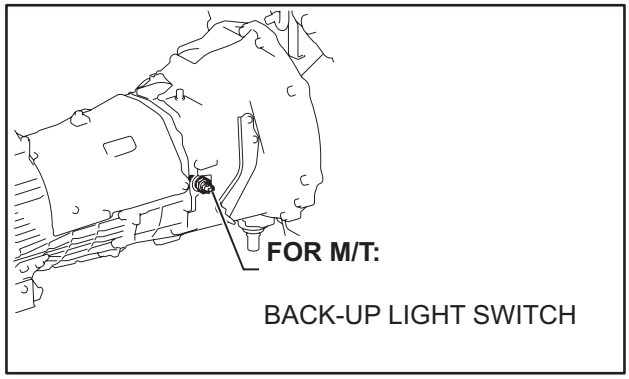

FOR M/T:

BACK-UP LIGHT SWITCH

B140771E01

SYSTEM DIAGRAM

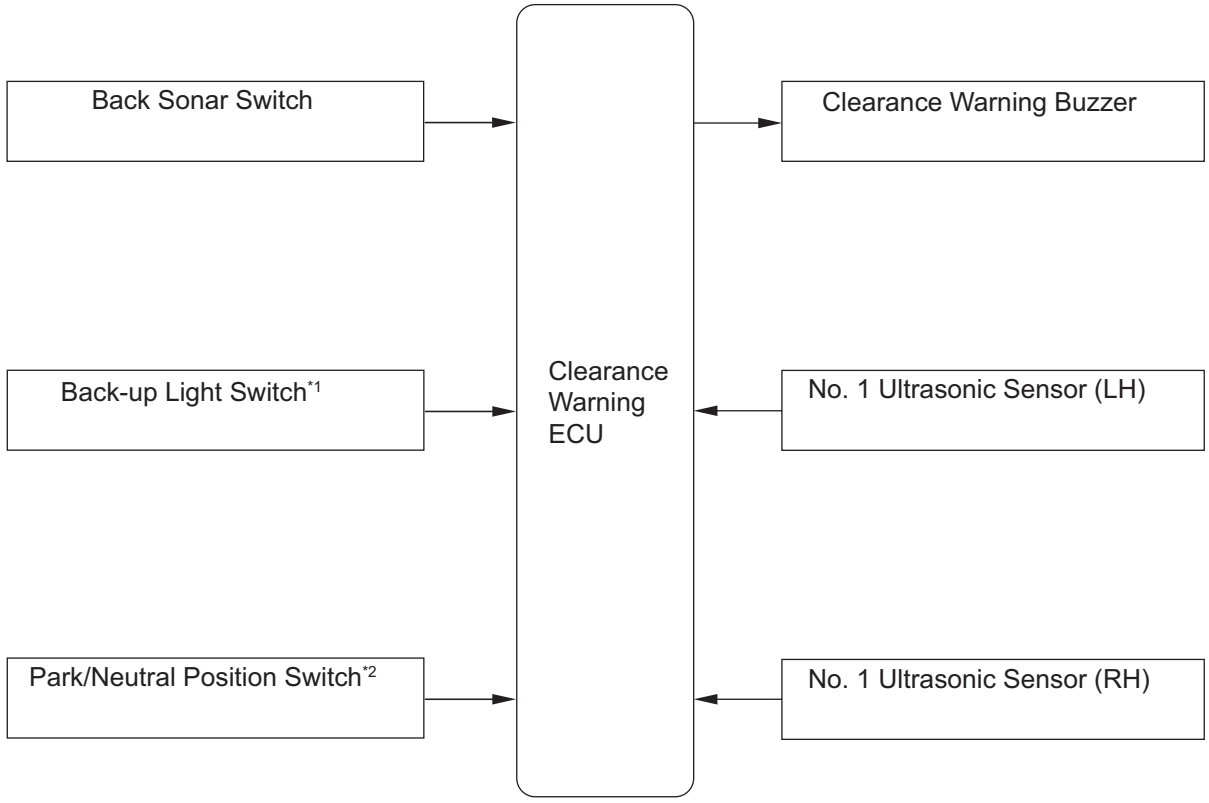

PM

SYSTEM DESCRIPTION

1. GENERAL

(a) This system uses ultrasonic sensors to detect obstacles at the rear of the vehicle. The system then informs the driver of the approximately distance between the sensors and the obstacles by sounding a buzzer.

2. FUNCTIONS OF COMPONENTS

Components	Function
Ultrasonic Sensor	Detects distance between vehicle and obstacle
Back Sonar Switch	Turns the clearance sonar system on and off
Clearance Warning Buzzer	Emits an intermittent sound to inform the driver that the ECU has detected an obstacle within prescribed ranges
Clearance Warning ECU	• Judges approximate distance between vehicle and obstacle • ECU has buzzer sound volume adjusting knob
Park / Neutral Position Switch (A/T)	Sends a signal that activates the clearance sonar system when the shift lever is moved to the R position
Back-up Light Switch (M/T)	Transmits reverse shift position signal to clearance warning ECU

3. OPERATION EXPLANATION

(a) The clearance warning ECU determines whether the clearance sonar system should operate or not based on the back sonar switch on/off status and the shift lever position.

(b) When the system operates, the clearance warning ECU transmits ultrasonic waves from the ultrasonic sensor. If an obstacle is detected within a sensor's detection range, the waves are reflected back to the sensors. The sensor then transmits a signal to the clearance warning ECU. Based on this information, the clearance warning ECU sends signals to the clearance warning buzzer. The approximate distance between the vehicle and the obstacle is then communicated through different types of buzzer sounds.
HINT:
Refer to "OPERATION CHECK" for detailed operation (See page PM-7).

4. NOTE FOR CLEARANCE SONAR SYSTEM

(a) Under the following conditions, the ultrasonic sensor may not operate properly.
(1) Foreign matter such as snow or mud is on sensor (the detection function returns to normal if foreign matter is cleared away).
(2) The sensor is frozen (the detection function returns to normal if defrosted).
HINT:
Especially in cold weather, the sensor may not be able to detect obstacles if it is frozen or otherwise affected by the weather.

(b) The detection range of the ultrasonic sensor may be affected by the following condition:
(1) Foreign matter such as snow or mud is on the sensor.

(2) In very hot or cold weather.

(c) Under the following conditions, the clearance sonar system may detect an error.
  (1) Another vehicle's horn, motorcycle engine sounds, an approaching vehicle's air brake sound, or other things that generate ultrasonic waves are near the vehicle.
  (2) The vehicle gets caught in a downpour, or mud or water splashes onto the vehicle's body.
  (3) The vehicle is severely tilted.
  (4) The vehicle is equipped with a commercial fender pole.
  (5) Foreign matter such as snow or mud is on the sensor.
  (6) A vehicle equipped with a sonar system is in the vicinity.
  (7) The vehicle is equipped with a towing hook.

(d) The clearance sonar system cannot detect the following objects:
  (1) Thin objects like wires, ropes or poles.
  (2) Materials that easily absorb the ultrasonic waves such as cotton, snow, etc.
  (3) Objects with sharp edges.
  (4) Short objects.
  (5) Tall objects with a protruding or overhanging upper part.

(e) Other conditions
  (1) The sensor cannot detect an object under the bumper. Also, the sensor may detect an object and then lose track of the object if: 1) the object starts out in the detection range and then ends up below the sensor, or 2) the object is a thin pole, such as a picket.
  (2) The sensor may be unable to detect objects when the sensor is too close to the objects.
  (3) The sensor may not operate properly if it is dropped or subjected to a strong impact.

HOW TO PROCEED WITH TROUBLESHOOTING

1	VEHICLE BROUGHT TO WORKSHOP

NEXT

2	INSPECT BATTERY VOLTAGE

Standard voltage:
11 to 14 V
If the voltage is below 11 V, recharge or replace the battery before proceeding.

NEXT

3	PROBLEM SYMPTOMS TABLE

Result

Result	Proceed to
Fault is not listed in problem symptoms table	A
Fault is listed in problem symptoms table	B

B → **Go to step 5**

A

4	OVERALL ANALYSIS AND TROUBLESHOOTING

(a) Operation check (See page PM-7).
(b) Terminals of ECU (See page PM-11).

NEXT

5	ADJUST, REPAIR OR REPLACE

NEXT

6	CONFIRMATION TEST

NEXT

END

OPERATION CHECK

1. DETECTION RANGE MEASUREMENT AND INDICATOR CHECK

(a) Turn the ignition switch ON.

(b) Move the shift lever to the reverse position (when the back sonar is checked).
NOTICE:
Apply the parking brake securely so that the vehicle does not move.

(c) Turn the back sonar switch ON.

(d) Move a ϕ 60 mm (2.36 in.) pole around the sensor to measure the detection ranges of the sensor.
NOTICE:
The measured detection ranges are for a ϕ 60 mm (2.36in.) pole. The detection ranges for walls and other obstacles are different.

Ultrasonic Sensor Detection Range:

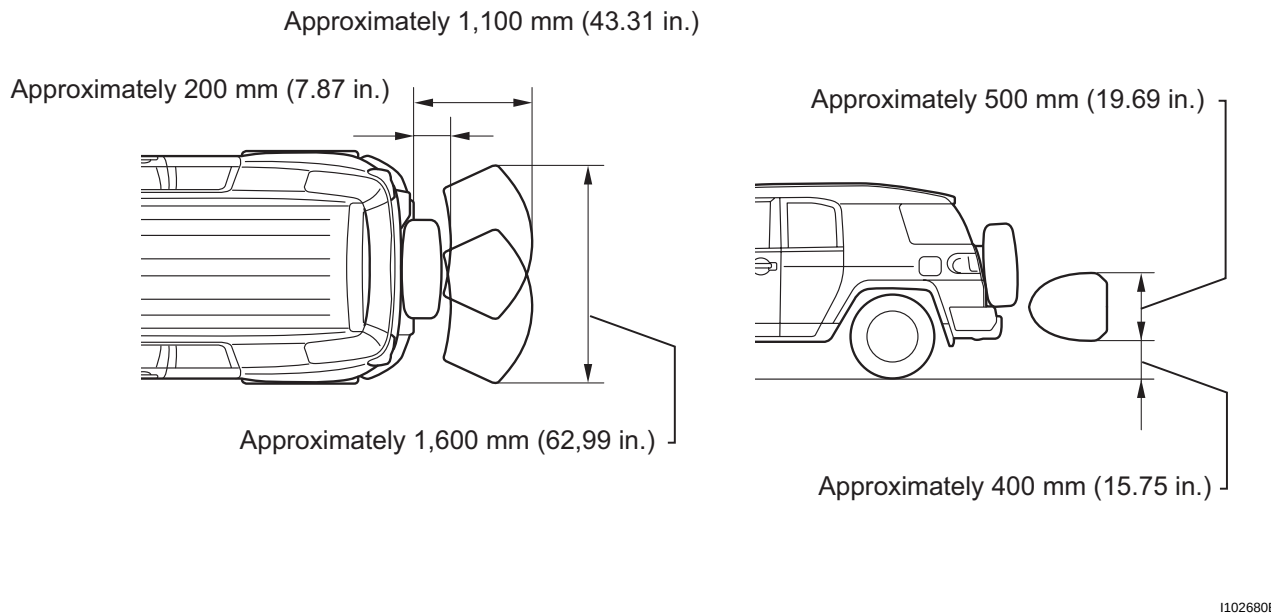

(e) Check the buzzer sounding condition when the ultrasonic sensor detects an obstacle.

Operation condition

Ignition switch	Clearance sonar main switch	Shift position
ON	ON	Reverse Position

HINT:
Since sound waves are used for the detection range measurement, the detection range may vary a little due to the outside air temperature.

PM

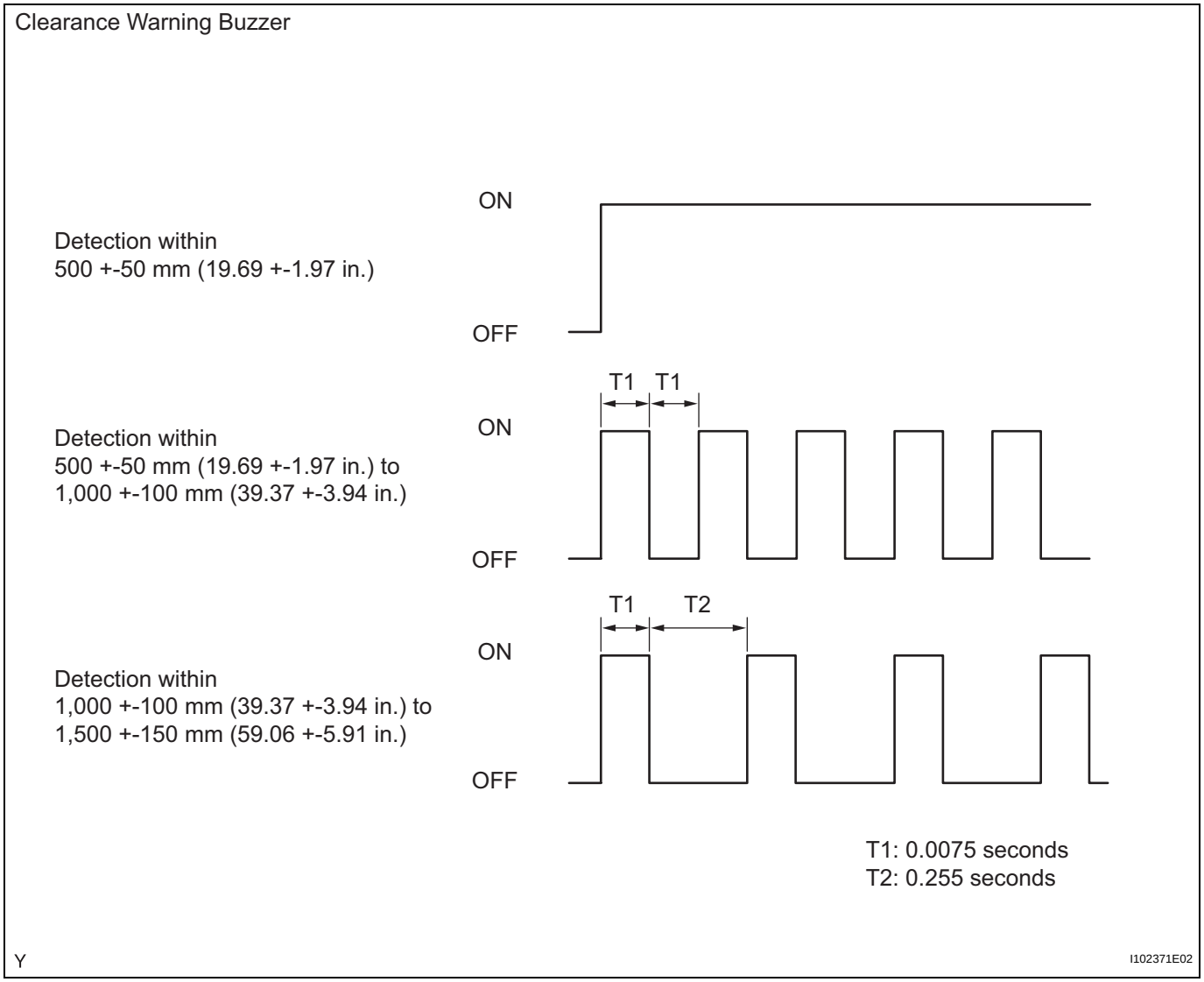

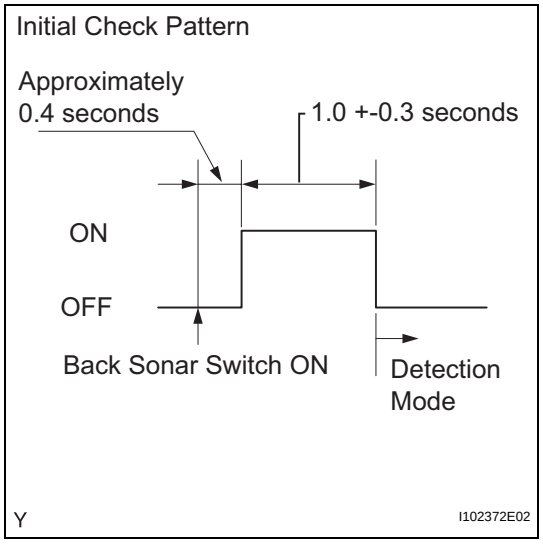

2. CHECK INITIAL CHECK FUNCTION

(a) Check the initial check function for the buzzer. Turn the ignition switch ON and turn the back sonar switch ON. Regardless of shift lever position, the buzzer will sound after approximately 0.4 seconds. The buzzer sound will continue for approximately 1.0 +- 0.3 seconds. If the buzzer's initial check pattern does not sound, there may be a malfunction in the ignition switch, back sonar switch, clearance warning buzzer and/or clearance warning ECU.

PM

(b) After checking the initial check function, check that the buzzer fault pattern does not sound. If the buzzer fault pattern sounds, there may be a problem with the sensor and/or sensor wire harness. The fault pattern will continue sounding until the problem is fixed.

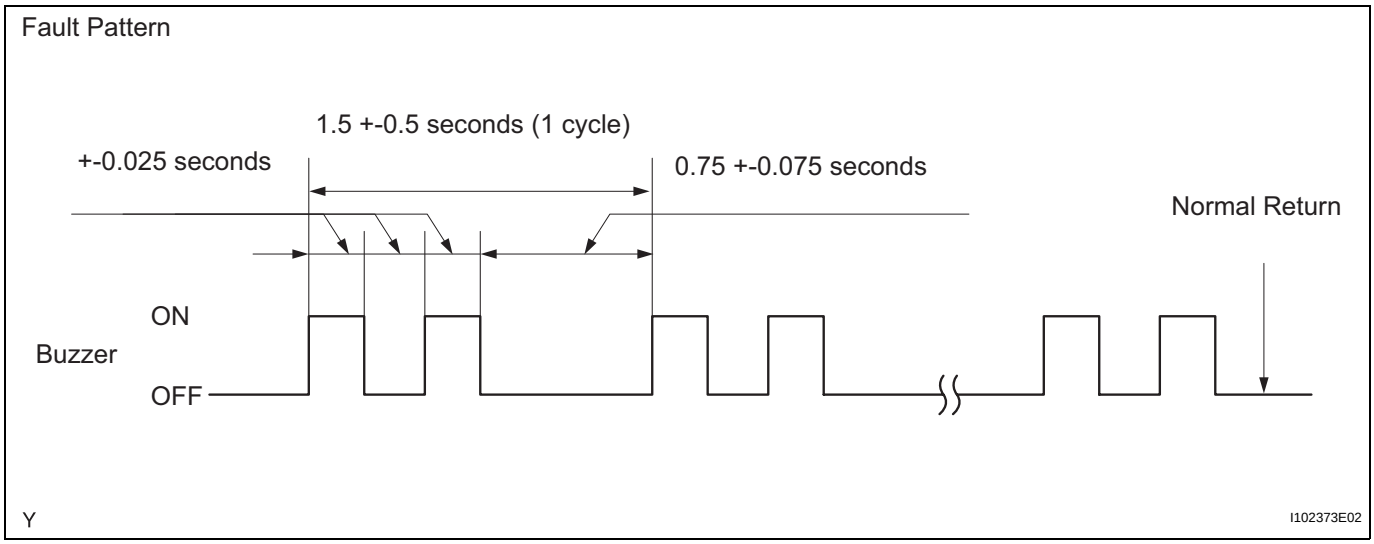

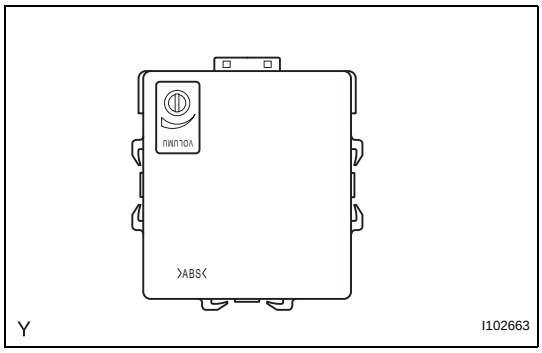

3. ADJUST BUZZER VOLUME

(a) Turn the knob on the clearance warning ECU to adjust the volume.

PM

PROBLEM SYMPTOMS TABLE

HINT:

- Use the table below to help determine the cause of the problem symptom. The potential causes of the symptoms are listed in order of probability in the "Suspected area" column of the table. Check each symptom by checking the suspected areas in the order they are listed. Replace parts as necessary.
- Inspect the fuses and relays related to this system before inspecting the suspected areas below.

Clearance sonar system

Symptom	Suspected area	See page
Initial check does not function	1. Clearance sonar main switch circuit	PM-19
	2. Clearance sonar buzzer circuit	PM-21
	3. Clearance warning buzzer	PM-21
	4. Wire harness	-
	5. Clearance warning ECU	PM-11
Clearance sonar system does not function (Initial check functions normally)	1. Initial check	-
	2. Back sonar sensor LH circuit	PM-15
	3. Back sonar sensor RH circuit	PM-17
	4. Back-up light switch circuit	PM-12
	5. Wire harness	-
	6. Clearance warning ECU	PM-11
Buzzer volume is too low	1. Adjust buzzer volume	PM-7

TERMINALS OF ECU

1. CLEARANCE WARNING ECU

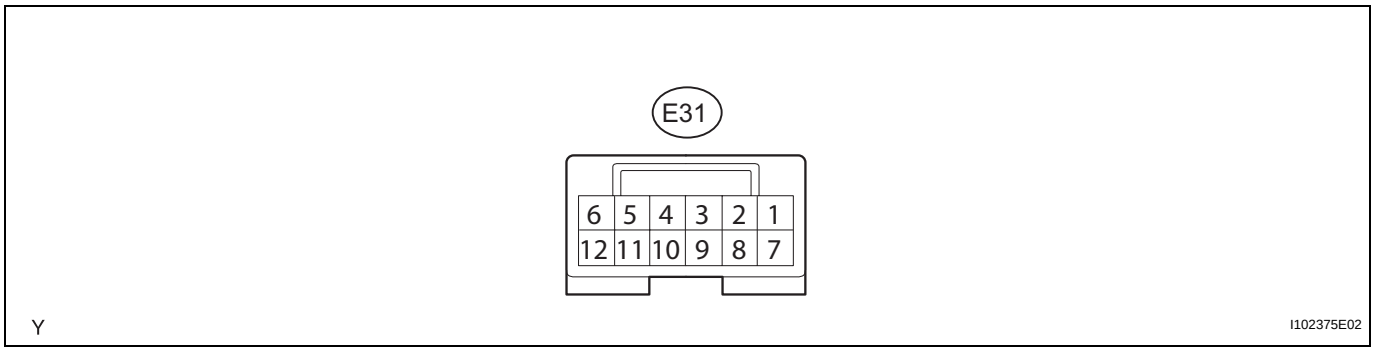

(a) Disconnect the E31 ECU connector.
(b) Measure the voltage of the wire harness side connector.

Standard voltage:

Symbols (Terminal No.)	Wiring Color	Terminal Description	Condition	Specified Condition
+B (E31-3) - Body ground	LG - Body ground	+B power supply	Ignition switch ON, back sonar switch ON	11 to 14 V
			Ignition switch ON, back sonar switch OFF	Below 1 V
E (E31-10) - Body ground	W-B - Body ground	Body ground	Always	Below 1 V

If the result is not as specified, there may be a malfunction on the wire harness side.

(c) Reconnect the ECU connector.
(d) Measure the voltage of the connector.

Standard voltage:

Symbols (Terminal No.)	Wiring Color	Terminal Description	Condition	Specified Condition
BBZ (E31-2) - E (E 31-10)	L-B - W-B	Buzzer input	Ignition switch ON, back sonar switch ON	Pulse generation
			Ignition switch ON, back sonar switch OFF	Below 1 V
S6 (E31-12) - E1 (E31-11)	P - Y	No. 1 ultrasonic sensor (LH)	When signal transmitted from ECU to No. 1 ultrasonic sensor (LH)	Pulse generation
S5 (E31-6) - E2 (E31-5)	B - W	No. 1 ultrasonic sensor (RH)	When signal transmitted from ECU to No. 1 ultrasonic sensor (RH)	
RL (E31-8) - Body ground	R-Y - Body ground	Back-up light switch signal input	Ignition switch ON, shift lever in reverse position	11 to 14 V
			Ignition switch ON, shift lever except reverse position	Below 1 V

If the result is not as specified, the ECU may have a malfunction.

PM

Back-up Light Circuit

DESCRIPTION

This circuit sends a signal of the back-up light switch or park/neutral position switch to the clearance warning ECU.

WIRING DIAGRAM

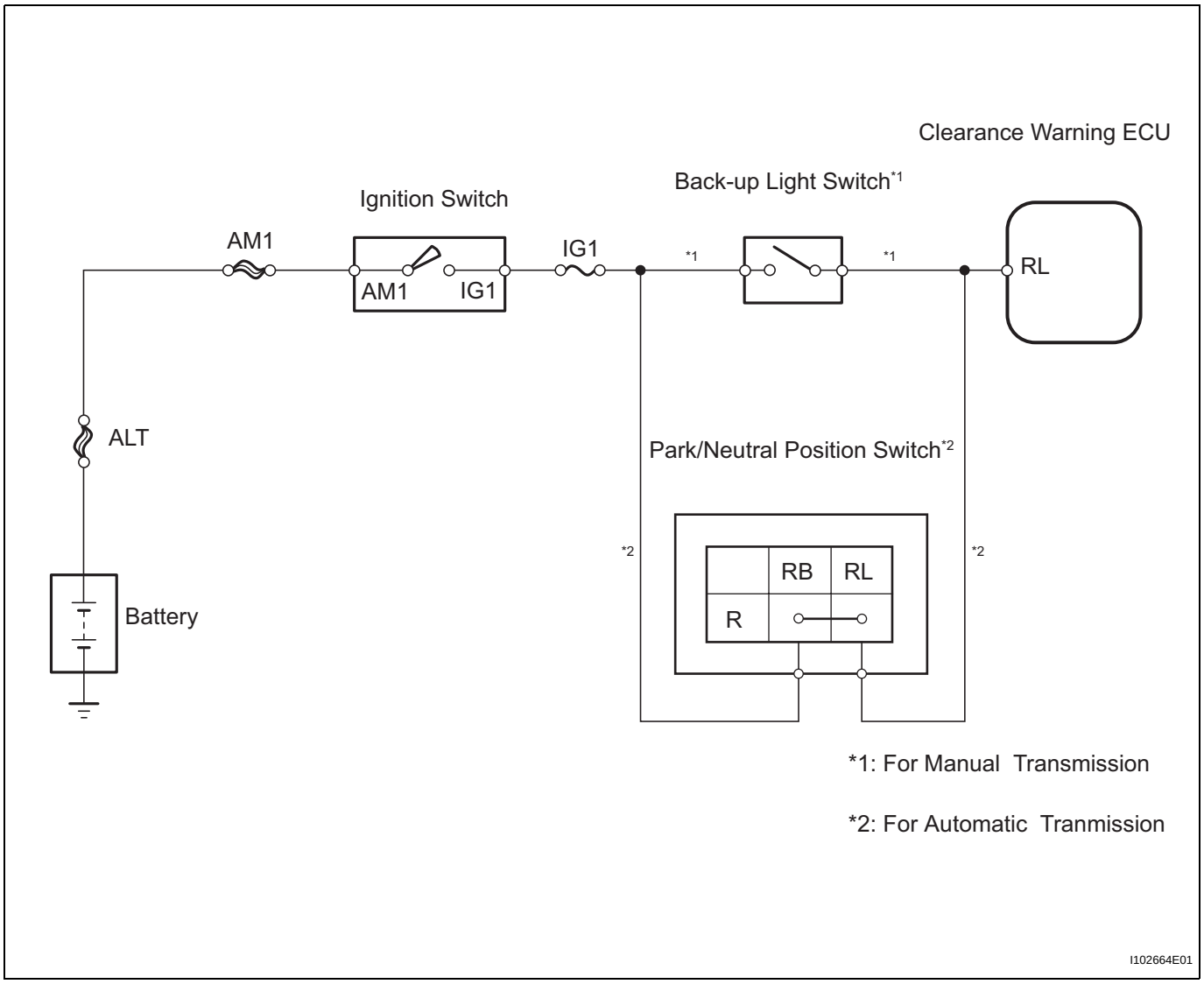

PM

INSPECTION PROCEDURE

1	INSPECT BACK-UP LIGHT SWITCH OR PARK/NEUTRAL POSITION SWITCH

Component Side:

Back-up Light Switch

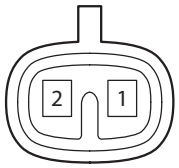

Y

I102381E01

(a) For manual transmission.
(1) Remove the back-up light switch.
(2) Measure the resistance of the switch.
Standard resistance

Tester Connection	Switch Condition	Specified Condition
1 - 2	Pushed	Below 1 Ω
	Not pushed	10 kΩ or higher

(3) Reinstall the back-up light switch.

Component Side:

Park / Neutral Position Switch

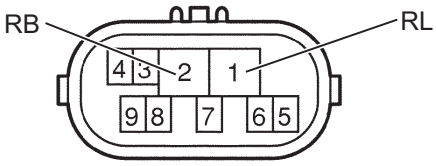

C110340E31

(b) For automatic transmission.
(1) Disconnect the B35 park / neutral position switch connector.
(2) Measure the resistance.
Standard resistance

Tester Connection	Shift Position	Specified Condition
B35-2 (RB) - B35-1 (RL)	R	Below 1 Ω
B35-2 (RB) - B35-1 (RL)	Except R	10 kΩ or higher

(3) Reconnect the park / neutral position switch connector.

NG → **REPLACE BACK-UP LIGHT SWITCH OR PARK/NEUTRAL POSITION SWITCH**

OK

PM

2	CHECK HARNESS AND CONNECTOR (SWITCH - CLEARANCE WARNING ECU AND BATTERY)

Wire Harness Side:

Back-up Light Switch Connector
(For M/T)

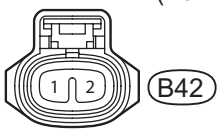

Front View

Park / Neutral Position Switch Connector
(For A/T)

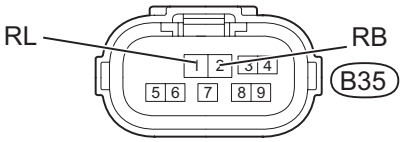

Front View

Clearance Warning ECU Connector

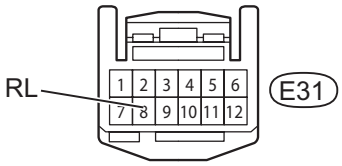

Front View

I102665E01

(a) Disconnect the B35 or B42 switch connector.
(b) Disconnect the E31clearance warning ECU connector.
(c) Measure the voltage of the wire harness side connector.

Standard voltage

For manual transmission:

Tester Connection	Switch Condition	Specified Condition
B42-2 - Body ground	Ignition switch ON	11 to 14 V

For automatic transmission:

Tester Connection	Switch Condition	Specified Condition
B35-2 (RB) - Body ground	Ignition switch ON	11 to 14 V

(d) Measure the resistance of the wire harness side connectors.

Standard resistance

For manual transmission:

Tester Connection	Specified Condition
B42-1 - E31-8 (RL)	Below 1 Ω

For automatic transmission:

Tester Connection	Specified Condition
B35-1 (RL) - E31-8 (RL)	Below 1 Ω

(e) Reconnect the switch connector.
(f) Reconnect the ECU connector.

NG → **REPAIR OR REPLACE HARNESS OR CONNECTOR**

OK

PROCEED TO NEXT CIRCUIT INSPECTION SHOWN IN PROBLEM SYMPTOMS TABLE

Back Sonar Sensor LH Circuit

DESCRIPTION

An ultrasonic sensor consists of a sensor portion that transmits and receives ultrasonic waves and a pre-amplifier that amplifies them. The ultrasonic sensor outputs the ultrasonic waves and sends the received signals to the clearance warning ECU.

WIRING DIAGRAM

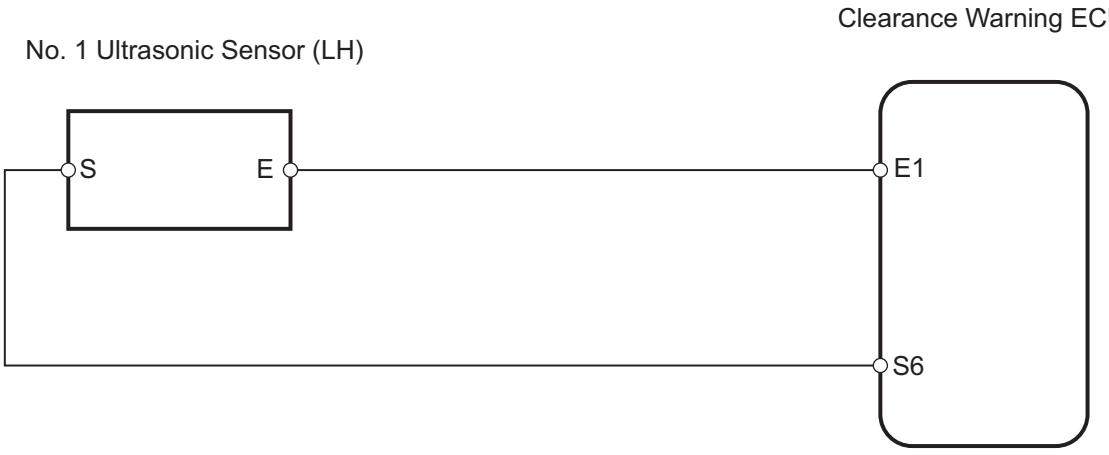

PM

INSPECTION PROCEDURE

1	INSPECT NO.1 ULTRASONIC SENSOR

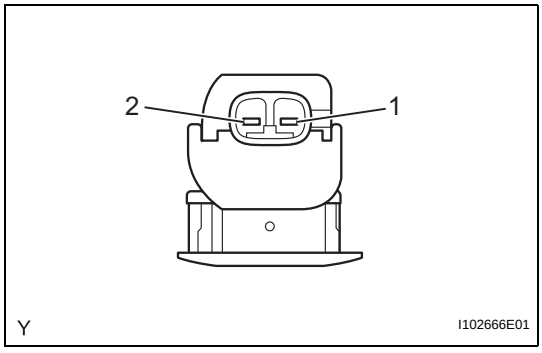

(a) Remove the No. 1 ultrasonic sensor.
(b) Measure the resistance.
Standard resistance

Tester connection	Specified condition
1 - 2	8 to 12 kΩ

(c) Reinstall the sensor.

NG → **REPLACE NO. 1 ULTRASONIC SENSOR**

OK

2	CHECK HARNESS AND CONNECTOR (CLEARANCE WARNING ECU - NO. 1 ULTRASONIC SENSOR)

Wire Harness Side:

Clearance Warning ECU

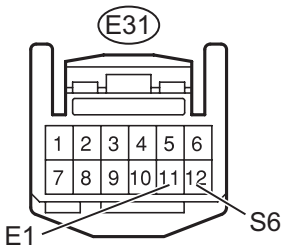

No. 1 Ultrasonic Sensor (LH)

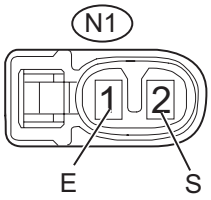

B132712E03

(a) Disconnect the E31 clearance warning ECU connector.
(b) Disconnect the N1 connector from the No. 1 ultrasonic sensor.
(c) Measure the resistance .

Standard resistance

Tester connection	Specified condition
S6 (E31-12) - S (N1-2)	Below 1 Ω
E1 (E31-11) - E (N1-1)	Below 1 Ω
S6 (E31-12) - Body ground	10 kΩ or higher
E1 (E31-11) - Body ground	10 kΩ or higher

(d) Reconnect the ECU connector.
(e) Reconnect the sensor connector.

NG → **REPAIR OR REPLACE HARNESS OR CONNECTOR**

OK

PROCEED TO NEXT CIRCUIT INSPECTION SHOWN IN PROBLEM SYMPTOMS TABLE

Back Sonar Sensor RH Circuit

DESCRIPTION

An ultrasonic sensor consists of a sensor portion that transmits and receives ultrasonic waves and a pre-amplifier that amplifies them. The ultrasonic sensor outputs the ultrasonic waves and sends the received signals to the clearance warning ECU.

WIRING DIAGRAM

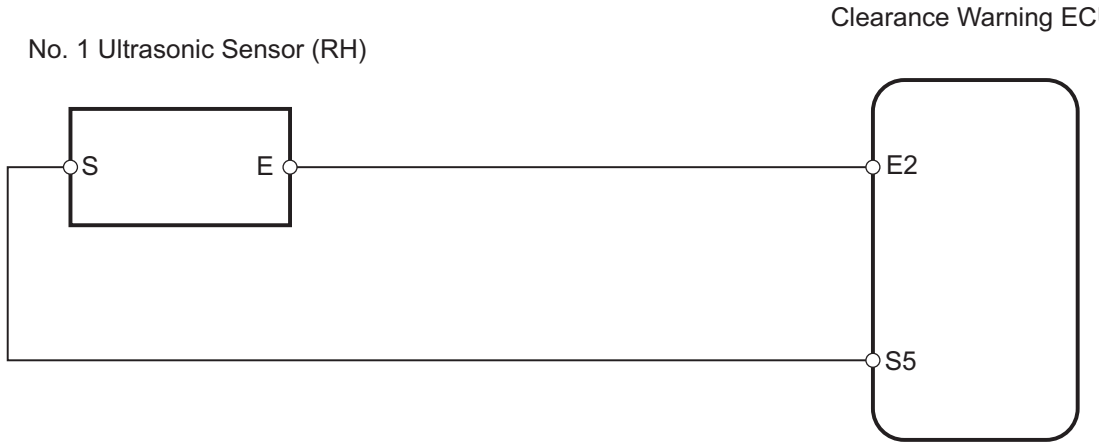

INSPECTION PROCEDURE

PM

1	INSPECT NO. 1 ULTRASONIC SENSOR

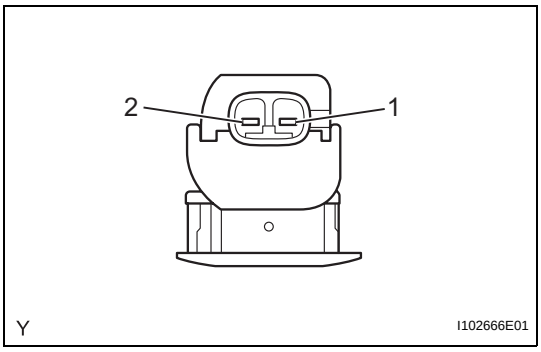

(a) Remove the No. 1 ultrasonic sensor.
(b) Measure the resistance.

Standard resistance

Tester connection	Specified condition
1 - 2	8 to 12 kΩ

(c) Reinstall the sensor.

NG → **REPLACE NO. 1 ULTRASONIC SENSOR**

OK

2	CHECK HARNESS AND CONNECTOR (CLEARANCE WARNING ECU - NO. 1 ULTRASONIC SENSOR)

Wire Harness Side:

Clearance Warning ECU

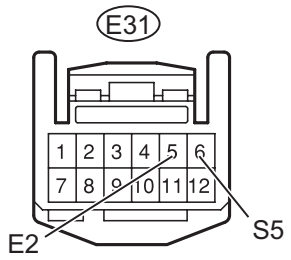

No. 1 Ultrasonic Sensor (RH)

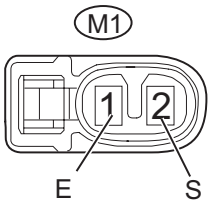

B132712E04

(a) Disconnect the E31 clearance warning ECU connector.
(b) Disconnect the M1 No. 1 ultrasonic sensor connector.
(c) Measure the resistance.

Standard resistance

Tester connection	Specified condition
S5 (E31-6) - S (M1-2)	Below 1 Ω
E2 (E31-5) - E (M1-1)	Below 1 Ω
S5 (E31-6) - Body ground	10 kΩ or higher
E2 (E31-5) - Body ground	10 kΩ or higher

(d) Reconnect the ECU connector.
(e) Reconnect the sensor connector.

NG → **REPAIR OR REPLACE HARNESS OR CONNECTOR**

OK

PROCEED TO NEXT CIRCUIT INSPECTION SHOWN IN PROBLEM SYMPTOMS TABLE

Clearance Sonar Main Switch Circuit

DESCRIPTION

Turning this switch on activates the clearance sonar system.

WIRING DIAGRAM

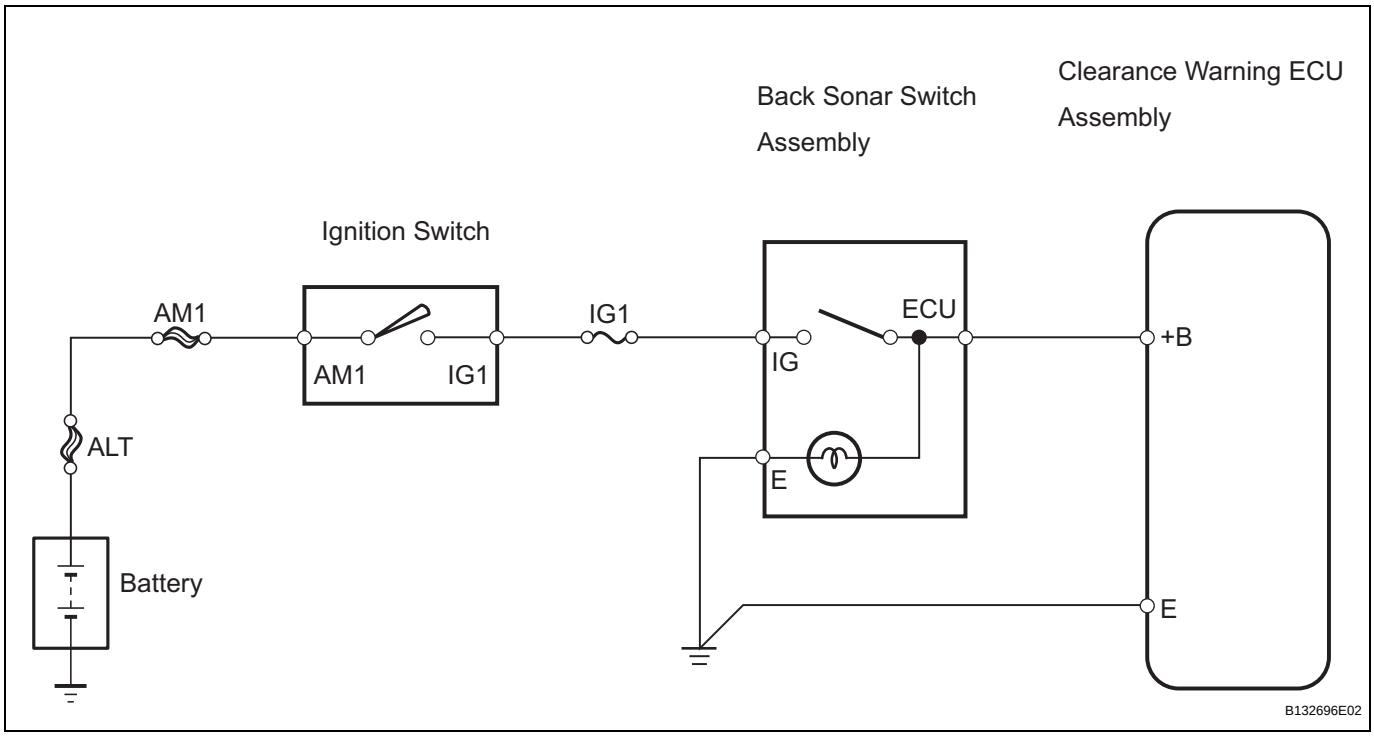

PM

INSPECTION PROCEDURE

1	INSPECT BACK SONAR SWITCH ASSEMBLY

Back Sonar Switch:

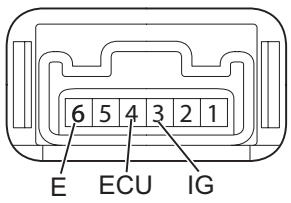

(a) Remove the back sonar switch.
(b) Check the resistance.

Standard resistance

Tester Connection	Switch Condition	Specified Condition
3 (IG) - 4 (ECU)	Back sonar switch ON	Below 1 Ω
	Back sonar switch OFF	1 MΩ or higher
3 (IG) - 6 (E)	Back sonar switch ON	Below 30 Ω
	Back sonar switch OFF	10 kΩ or higher

(c) Reinstall the back sonar switch.

NG → REPLACE BACK SONAR SWITCH ASSEMBLY

OK

2 CHECK HARNESS AND CONNECTOR (SWITCH - ECU, BATTERY AND BODY GROUND)

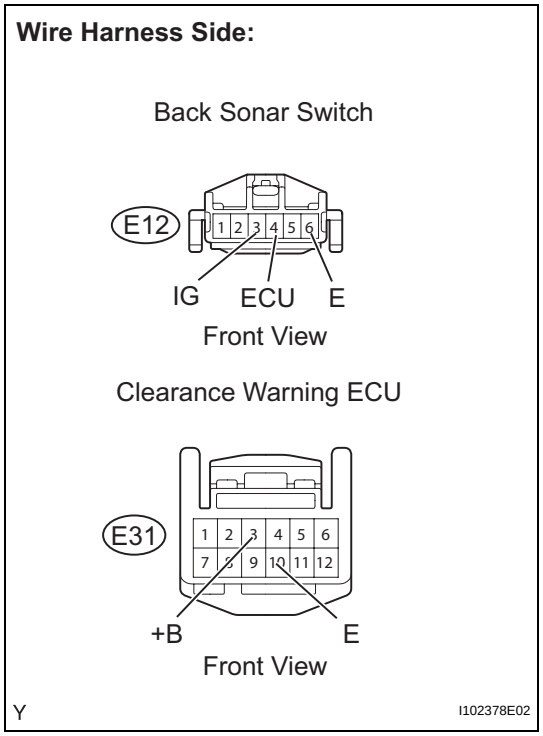

(a) Disconnect the E12 back sonar switch connector.
(b) Disconnect the E31 clearance warning ECU connector.
(c) Measure the voltage of the wire harness side connector.
Standard voltage

Tester Connection	Switch Condition	Specified Condition
E12-3 (IG) - Body ground	Ignition switch ON	11 to 14 V

(d) Check the resistance.
Standard resistance

Tester Connection	Specified Condition
E12-4 (ECU) - E31-3 (+B)	Below 1 Ω
E12-6 (E) - Body ground	
E31-10 (E) - Body ground	

(e) Reconnect the switch connector.
(f) Reconnect the ECU connector.

NG → **REPAIR OR REPLACE HARNESS OR CONNECTOR**

OK

3 CHECK CLEARANCE WARNING ECU ASSEMBLY

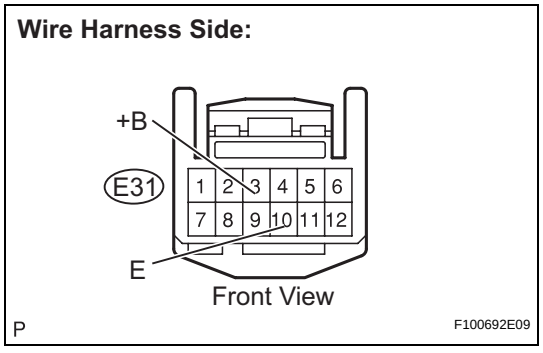

(a) Disconnect the E31 clearance warning ECU connector.
(b) Measure the voltage of the wire harness side connector.
Standard voltage

Tester Connection	Switch Condition	Specified Condition
E31-3 (+B) - E31-10 (E)	Ignition switch ON, back sonar switch ON	11 to 14 V

(c) Reconnect the ECU connector.

OK → **REPLACE CLEARANCE WARNING ECU ASSEMBLY**

NG

PROCEED TO NEXT CIRCUIT INSPECTION SHOWN IN PROBLEM SYMPTOMS TABLE

PM

Clearance Warning Buzzer Circuit

DESCRIPTION

The clearance warning ECU receives the ultrasonic sensor signal to sound the clearance warning buzzer.

WIRING DIAGRAM

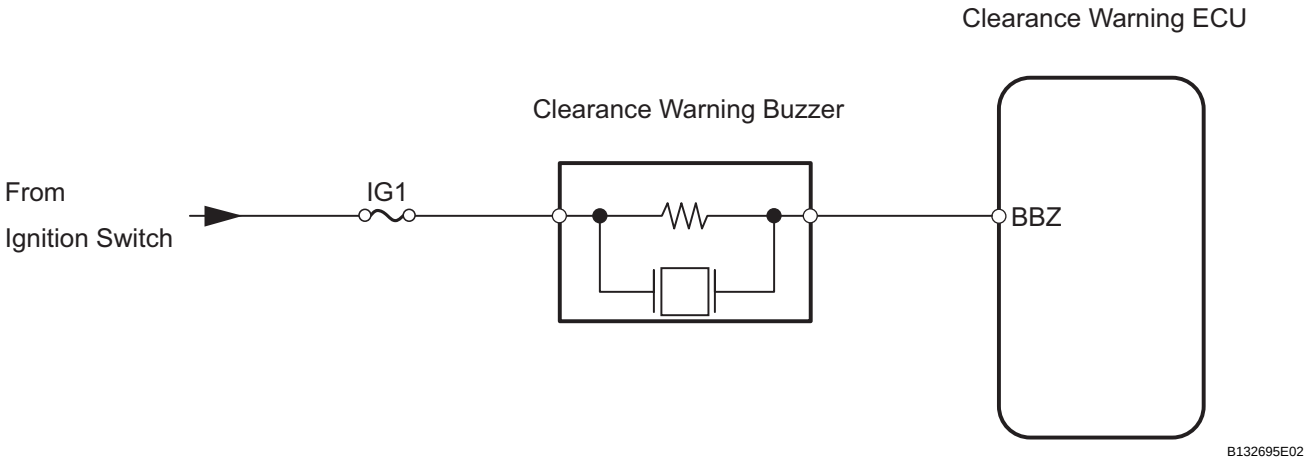

INSPECTION PROCEDURE

1	CHECK HARNESS AND CONNECTOR (BUZZER - ECU AND BATTERY)

PM

Wire Harness Side:

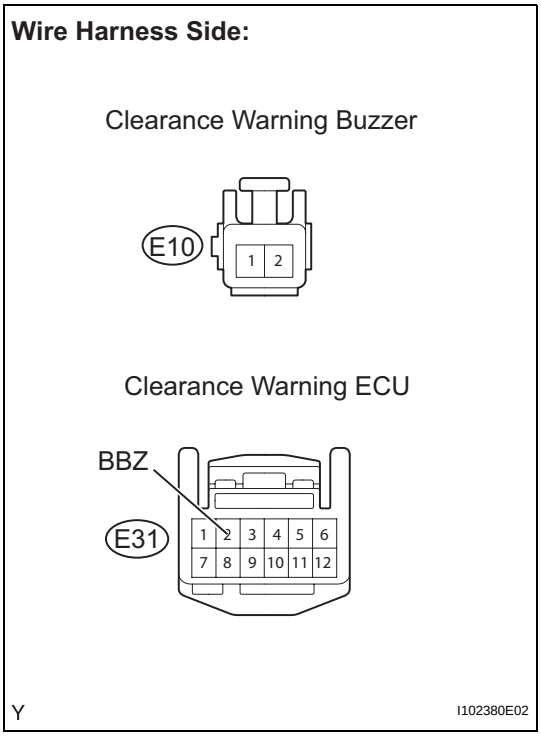

(a) Disconnect the E10 clearance warning buzzer connector.
(b) Disconnect the E31 clearance warning ECU connector.
(c) Measure the voltage of the wire harness side connector.
Standard voltage

Tester Connection	Switch Condition	Specified Condition
E10-1 - Body ground	Ignition switch ON	11 to 14 V

(d) Check the resistance.
Standard resistance

Tester Connection	Specified Condition
E10-2 - E31-2 (BBZ)	Below 1 Ω

(e) Reconnect the buzzer connector.
(f) Reconnect the ECU connector.

NG → **REPAIR OR REPLACE HARNESS OR CONNECTOR**

OK

PROCEED TO NEXT CIRCUIT INSPECTION SHOWN IN PROBLEM SYMPTOMS TABLE

CLEARANCE WARNING ECU

COMPONENTS

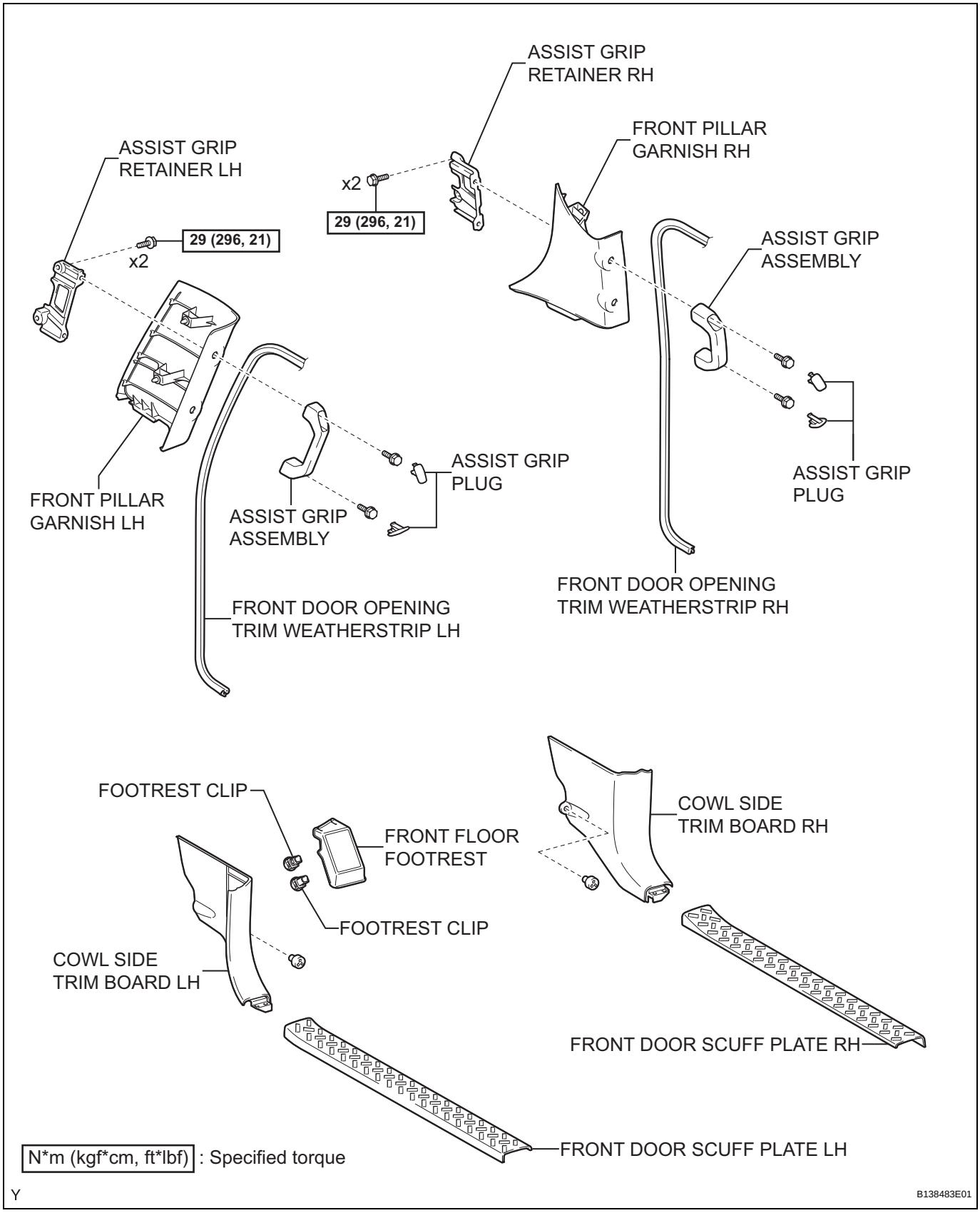

PM

for Automatic Transmission 4WD:	for Manual Transmission:
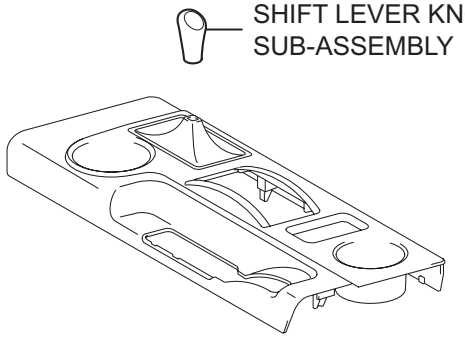	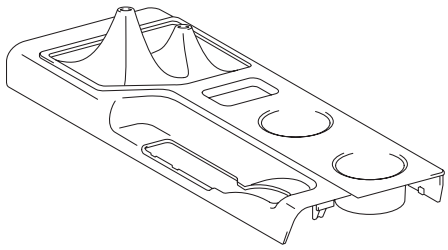

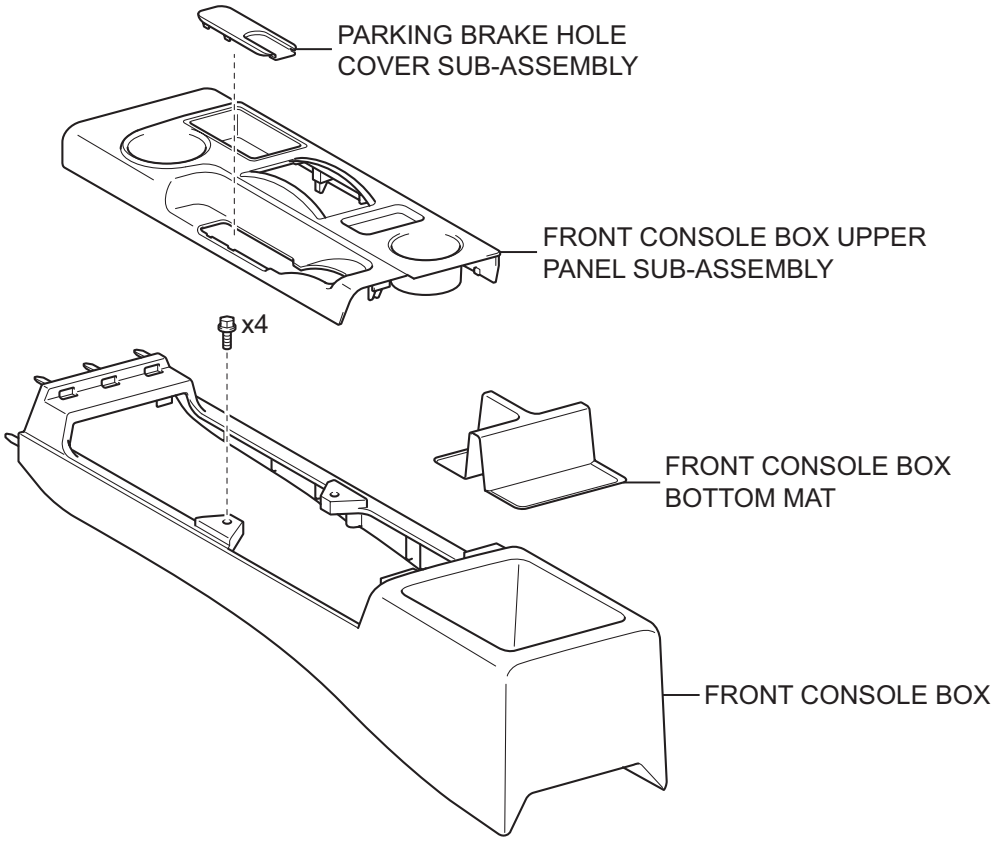

PM

Y

B138638E01

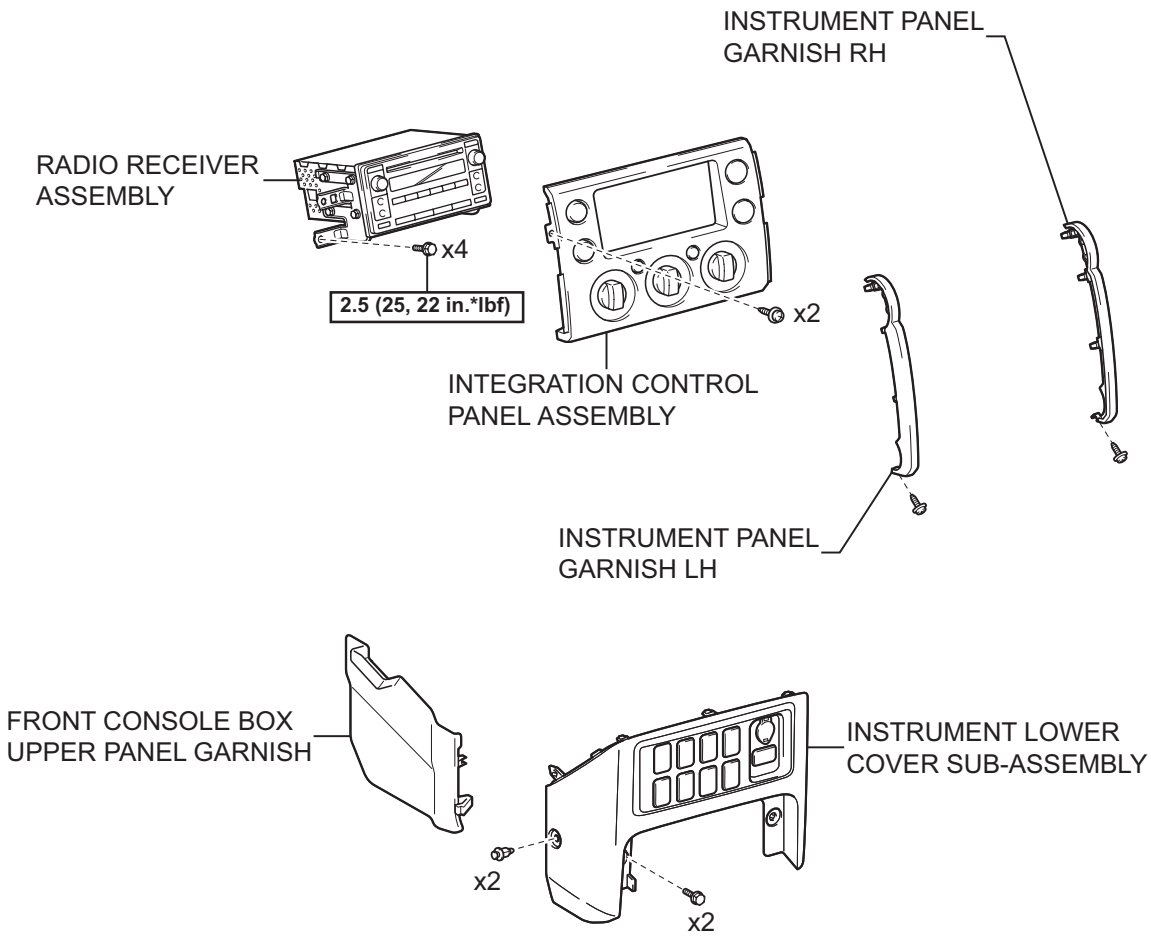

N*m (kgf*cm, ft*lbf) : Specified torque

P

B138484E01

PM

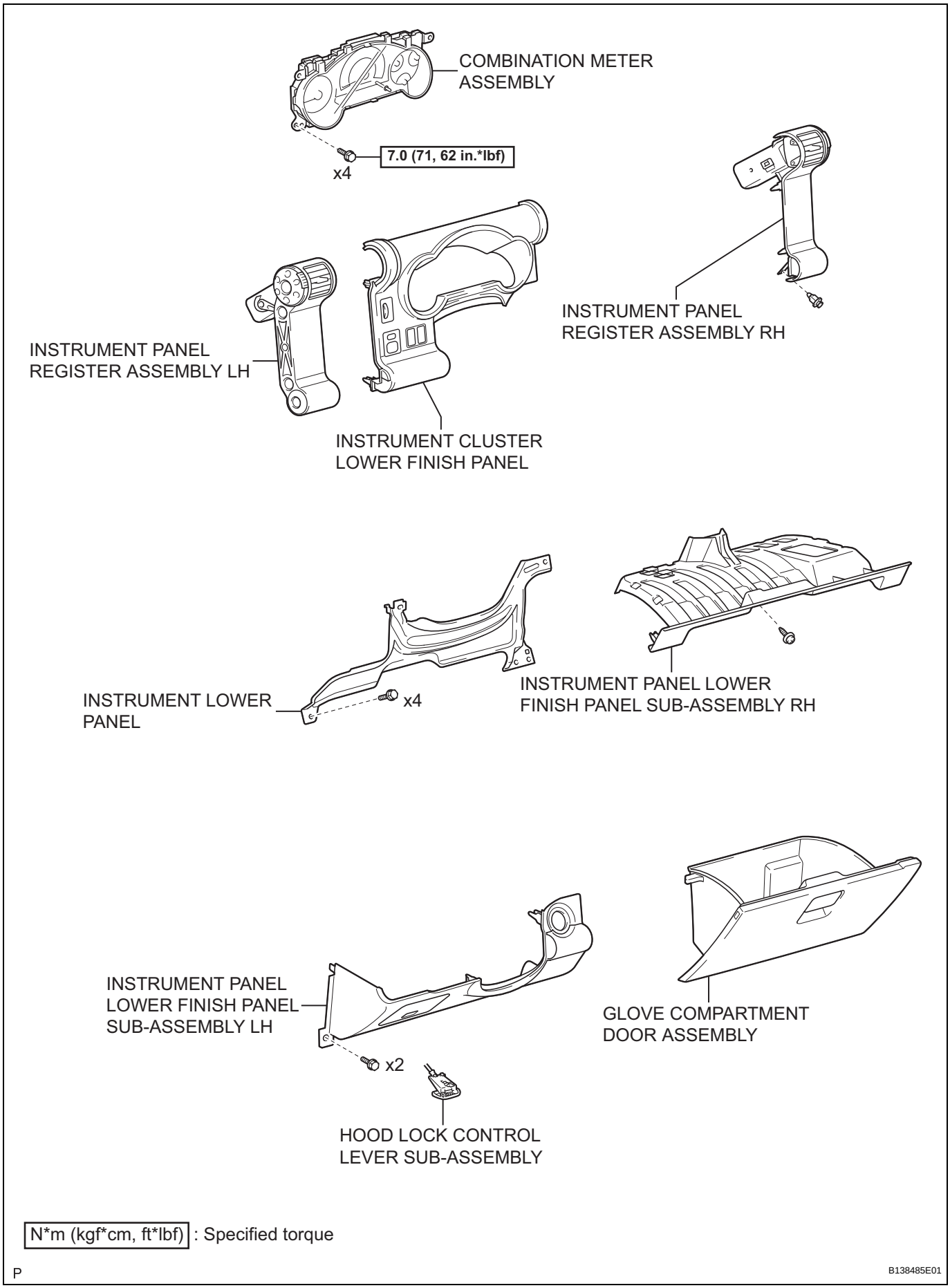

PM

N*m (kgf*cm, ft*lbf) : Specified torque

P

B138485E01

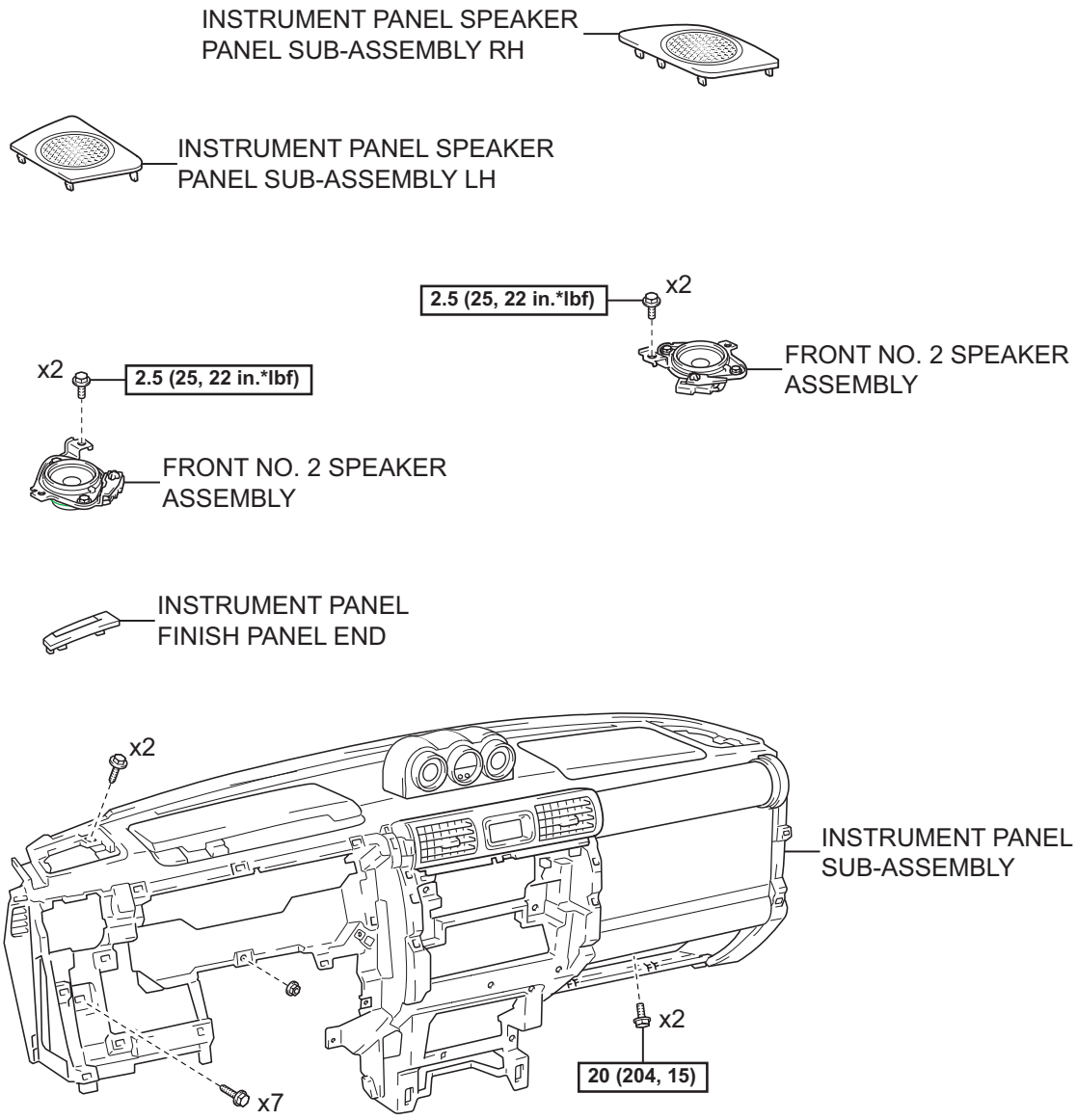

PM

N*m (kgf*cm, ft*lbf) : Specified torque

P

B138486E01

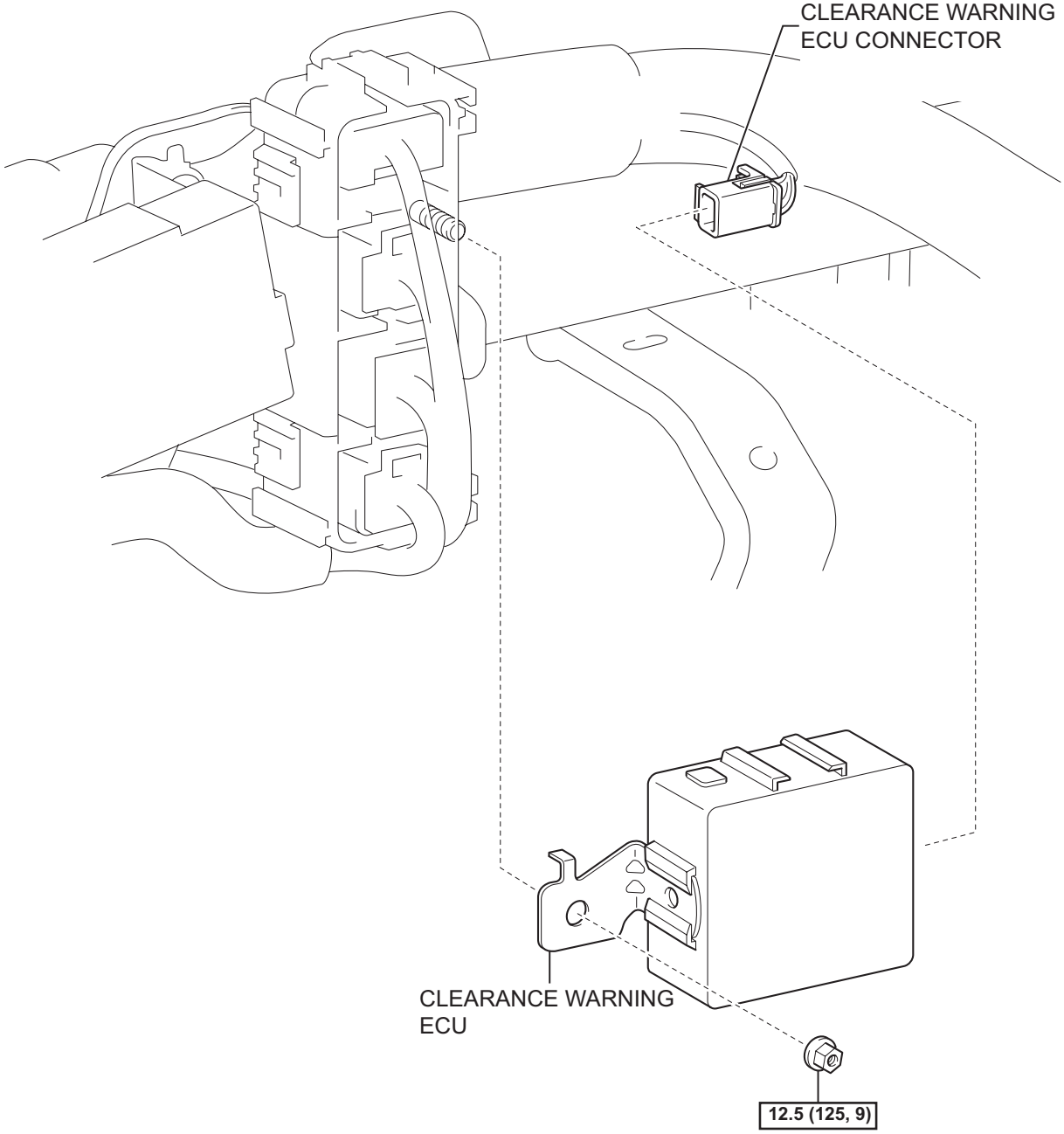

N*m (kgf*cm, ft*lbf) : Specified torque

Y

B135077E01

PM

REMOVAL

CAUTION:
Some of these service operations affect the SRS airbag system. Read the precautionary notices concerning the SRS airbag system before servicing (See page RS-1).

1. **DISCONNECT CABLE FROM NEGATIVE BATTERY TERMINAL**
   CAUTION:
   Wait for at least 90 seconds after disconnecting the cable to prevent the airbag from working.
2. **REMOVE FRONT DOOR SCUFF PLATE RH (See page IR-15)**
3. **REMOVE FRONT DOOR SCUFF PLATE LH (See page IR-15)**
4. **REMOVE FRONT FLOOR FOOTREST (See page IR-2)**
5. **REMOVE FOOTREST CLIP (See page IR-2)**
6. **REMOVE COWL SIDE TRIM BOARD RH (See page IR-15)**
7. **REMOVE COWL SIDE TRIM BOARD LH (See page IR-15)**
8. **SEPARATE FRONT DOOR OPENING TRIM WEATHERSTRIP RH (See page AV-98)**
9. **SEPARATE FRONT DOOR OPENING TRIM WEATHERSTRIP LH (See page AV-98)**
10. **REMOVE ASSIST GRIP PLUG (See page AV-99)**
11. **REMOVE ASSIST GRIP ASSEMBLY (See page AV-99)**
12. **REMOVE FRONT PILLAR GARNISH RH (See page IR-18)**
13. **REMOVE FRONT PILLAR GARNISH LH (See page IR-18)**
14. **REMOVE ASSIST GRIP RETAINER RH (See page IP-16)**
15. **REMOVE ASSIST GRIP RETAINER LH (See page IP-16)**
16. **REMOVE INSTRUMENT PANEL GARNISH LH (See page IP-10)**
17. **REMOVE INSTRUMENT PANEL GARNISH RH (See page IP-10)**
18. **REMOVE INTEGRATION CONTROL PANEL ASSEMBLY (See page IP-11)**
19. **REMOVE RADIO RECEIVER ASSEMBLY (See page AV-55)**
20. **REMOVE PARKING BRAKE HOLE COVER SUB-ASSEMBLY (See page IP-11)**

21. REMOVE SHIFT LEVER KNOB SUB-ASSEMBLY (for Manual Transmission) (See page IP-11)
22. REMOVE SHIFT LEVER KNOB SUB-ASSEMBLY (for 4WD) (See page IP-11)
23. REMOVE FRONT CONSOLE BOX UPPER PANEL SUB-ASSEMBLY (See page IP-12)
24. REMOVE FRONT CONSOLE BOX BOTTOM MAT (See page IP-12)
25. REMOVE FRONT CONSOLE BOX (See page IP-12)
26. REMOVE FRONT CONSOLE BOX PANEL GARNISH (See page IP-12)
27. REMOVE INSTRUMENT LOWER COVER SUB-ASSEMBLY (See page IP-13)
28. REMOVE INSTRUMENT PANEL REGISTER ASSEMBLY LH (See page IP-13)
29. REMOVE HOOD LOCK CONTROL LEVER SUB-ASSEMBLY (See page IP-13)
30. REMOVE INSTRUMENT PANEL LOWER FINISH PANEL SUB-ASSEMBLY LH (See page IP-14)
31. REMOVE INSTRUMENT LOWER PANEL (See page IP-14)
32. REMOVE INSTRUMENT CLUSTER LOWER FINISH PANEL (See page IP-14)
33. REMOVE COMBINATION METER ASSEMBLY (See page IP-14)
34. REMOVE GLOVE COMPARTMENT DOOR ASSEMBLY (See page IP-15)
35. REMOVE INSTRUMENT PANEL LOWER FINISH PANEL SUB-ASSEMBLY RH (See page IP-15)
36. REMOVE INSTRUMENT PANEL REGISTER ASSEMBLY RH (See page IP-16)
37. REMOVE INSTRUMENT PANEL SPEAKER PANEL SUB-ASSEMBLY RH (See page IP-16)
38. REMOVE INSTRUMENT PANEL SPEAKER PANEL SUB-ASSEMBLY LH (See page IP-16)
39. REMOVE FRONT NO. 2 SPEAKER ASSEMBLY (See page AV-101)
40. DISCONNECT PASSENGER AIRBAG CONNECTOR (See page IP-16)
41. REMOVE INSTRUMENT PANEL SUB-ASSEMBLY (See page IP-16)
42. REMOVE INSTRUMENT PANEL FINISH PANEL END (See page IP-21)

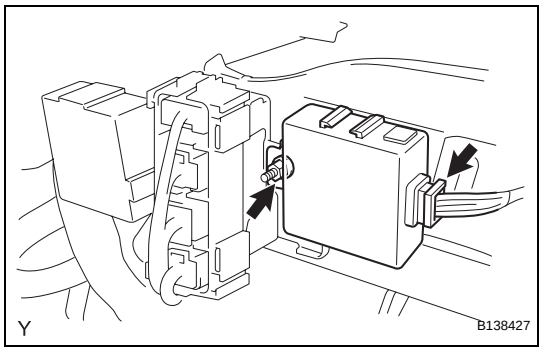

43. REMOVE CLEARANCE WARNING ECU ASSEMBLY

(a) Disconnect the clearance warning ECU connector.

(b) Remove the bolt and the clearance warning ECU.

INSTALLATION

CAUTION:
Some of these service operations affect the SRS airbag system. Read the precautionary notices concerning the SRS airbag system before servicing (See page RS-1).

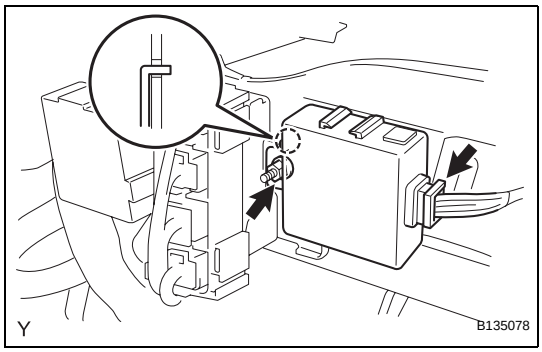

1. **INSTALL CLEARANCE WARNING ECU ASSEMBLY**
   (a) Insert the hook into the instrument panel reinforcement hole and install the clearance warning ECU with the nut.
   Torque: 12.5 N*m (125 kgf*cm, 9 ft.*lbf)
   (b) Connect the clearance warning ECU connector.
2. **INSTALL INSTRUMENT PANEL SUB-ASSEMBLY (See page IP-26)**
3. **CONNECT PASSENGER AIRBAG CONNECTOR (See page IP-26)**
4. **INSTALL INSTRUMENT PANEL FINISH PANEL END (See page IP-27)**
5. **INSTALL FRONT NO. 2 SPEAKER ASSEMBLY (See page AV-102)**
6. **INSTALL INSTRUMENT PANEL SPEAKER PANEL SUB-ASSEMBLY RH (See page IP-27)**
7. **INSTALL INSTRUMENT PANEL SPEAKER PANEL SUB-ASSEMBLY LH (See page IP-27)**
8. **INSTALL INSTRUMENT PANEL REGISTER ASSEMBLY RH (See page IP-27)**
9. **INSTALL INSTRUMENT PANEL LOWER FINISH PANEL SUB-ASSEMBLY RH (See page IP-28)**
10. **INSTALL GLOVE COMPARTMENT DOOR ASSEMBLY (See page IP-28)**
11. **INSTALL COMBINATION METER ASSEMBLY (See page IP-28)**
12. **INSTALL INSTRUMENT CLUSTER LOWER FINISH PANEL (See page IP-29)**
13. **INSTALL INSTRUMENT LOWER PANEL (See page IP-29)**
14. **INSTALL INSTRUMENT PANEL LOWER FINISH PANEL SUB-ASSEMBLY LH (See page IP-29)**
15. **INSTALL HOOD LOCK CONTROL LEVER SUB-ASSEMBLY (See page IP-30)**
16. **INSTALL INSTRUMENT PANEL REGISTER ASSEMBLY LH (See page IP-30)**
17. **INSTALL INSTRUMENT LOWER COVER SUB-ASSEMBLY (See page IP-30)**
18. **INSTALL FRONT CONSOLE BOX UPPER PANEL GARNISH (See page IP-31)**

19. INSTALL FRONT CONSOLE BOX (See page IP-31)
20. INSTALL FRONT CONSOLE BOX BOTTOM MAT (See page IP-31)
21. INSTALL FRONT CONSOLE BOX UPPER PANEL SUB-ASSEMBLY (See page IP-31)
22. INSTALL SHIFT LEVER KNOB SUB-ASSEMBLY (for 4WD) (See page IP-32)
23. INSTALL SHIFT LEVER KNOB SUB-ASSEMBLY (for Manual Transmission) (See page IP-32)
24. INSTALL PARKING BRAKE HOLE COVER SUB-ASSEMBLY (See page IP-32)
25. INSTALL RADIO RECEIVER ASSEMBLY (See page AV-56)
26. INSTALL INTEGRATION CONTROL PANEL ASSEMBLY (See page IP-32)
27. INSTALL INSTRUMENT PANEL GARNISH LH (See page IP-33)
28. INSTALL INSTRUMENT PANEL GARNISH RH (See page IR-43)
29. INSTALL ASSIST GRIP RETAINER RH (See page IP-27)
30. INSTALL ASSIST GRIP RETAINER LH (See page IP-27)
31. INSTALL FRONT PILLAR GARNISH RH (See page IR-43)
32. INSTALL FRONT PILLAR GARNISH LH (See page IR-43)
33. INSTALL ASSIST GRIP ASSEMBLY (See page AV-103)
34. INSTALL ASSIST GRIP PLUG (See page AV-104)
35. INSTALL FRONT DOOR OPENING TRIM WEATHERSTRIP RH (See page AV-104)
36. INSTALL FRONT DOOR OPENING TRIM WEATHERSTRIP LH (See page AV-104)
37. INSTALL COWL SIDE TRIM BOARD RH (See page IR-45)
38. INSTALL COWL SIDE TRIM BOARD LH (See page IR-45)
39. INSTALL FOOTREST CLIP (See page IR-2)
40. INSTALL FRONT FLOOR FOOTREST (See page IR-2)
41. INSTALL FRONT DOOR SCUFF PLATE RH (See page IR-45)
42. INSTALL FRONT DOOR SCUFF PLATE LH (See page IR-45)

43. **CONNECT CABLE TO NEGATIVE BATTERY TERMINAL**
Torque: 3.9 N*m (40 kgf*cm, 35 in.*lbf)

44. **INSPECT SRS WARNING LIGHT**
(See page RS-29)

CLEARANCE WARNING BUZZER

COMPONENTS



PM

REMOVAL

1. DISCONNECT CABLE FROM NEGATIVE BATTERY TERMINAL

2. REMOVE CLEARANCE WARNING BUZZER

(a) Disconnect the clearance warning buzzer connector.

(b) Disengage the clamp and remove the clearance warning buzzer.

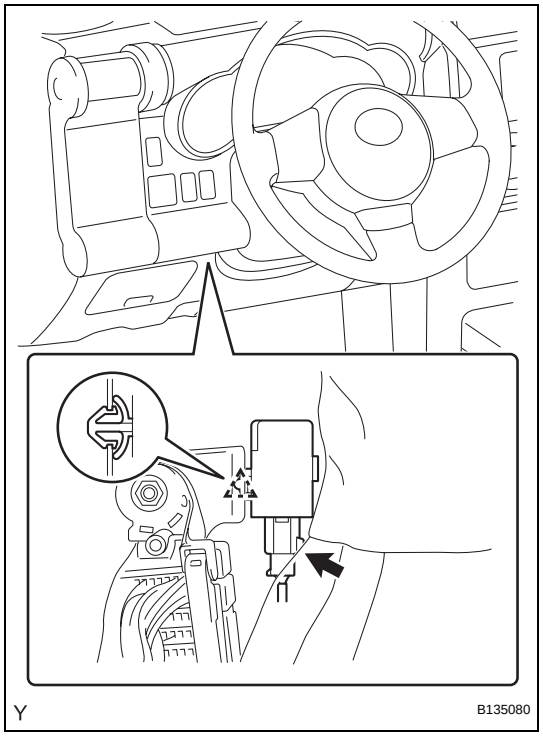

INSPECTION

1. INSPECT CLEARANCE WARNING BUZZER

(a) Check the resistance.

(1) Using an ohmmeter, measure the resistance between the terminals.

Standard resistance

Tester Connection	Specified Condition
1 - 2	Approximately 1 kΩ

If the result is not as specified, replace the clearance warning buzzer.

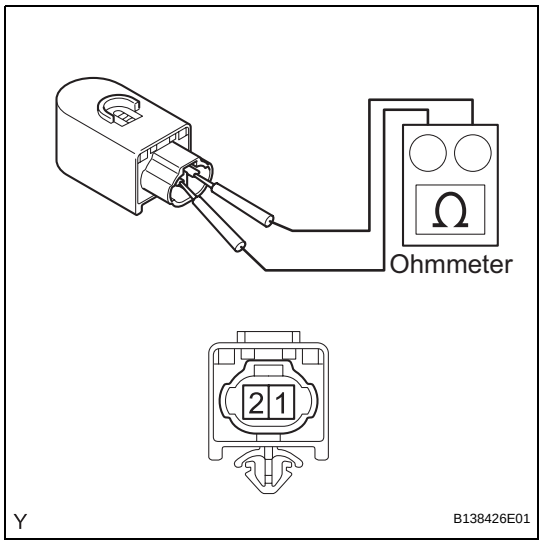

PM

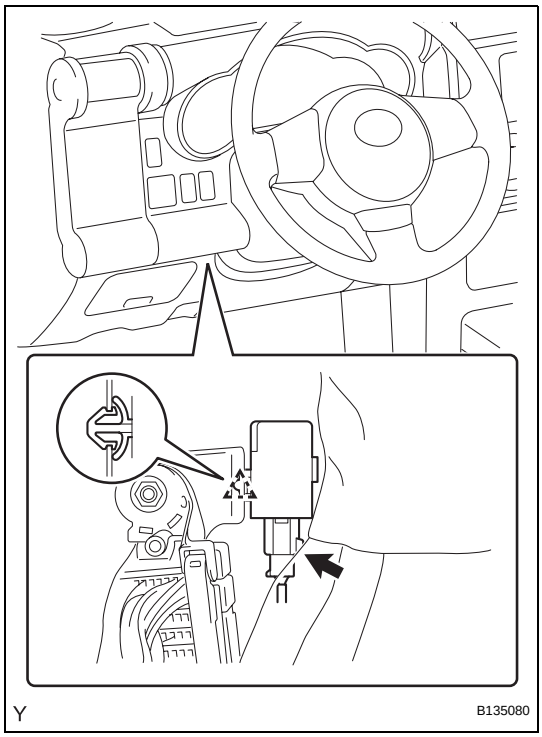

INSTALLATION

1. **INSTALL CLEARANCE WARNING BUZZER**
   (a) Engage the clamp and install the clearance warning buzzer.
   (b) Connect the clearance warning buzzer connector.

2. **CONNECT CABLE TO NEGATIVE BATTERY TERMINAL**
   Torque: 3.9 N*m (40 kgf*cm, 35 in.*lbf)

ULTRASONIC SENSOR

COMPONENTS

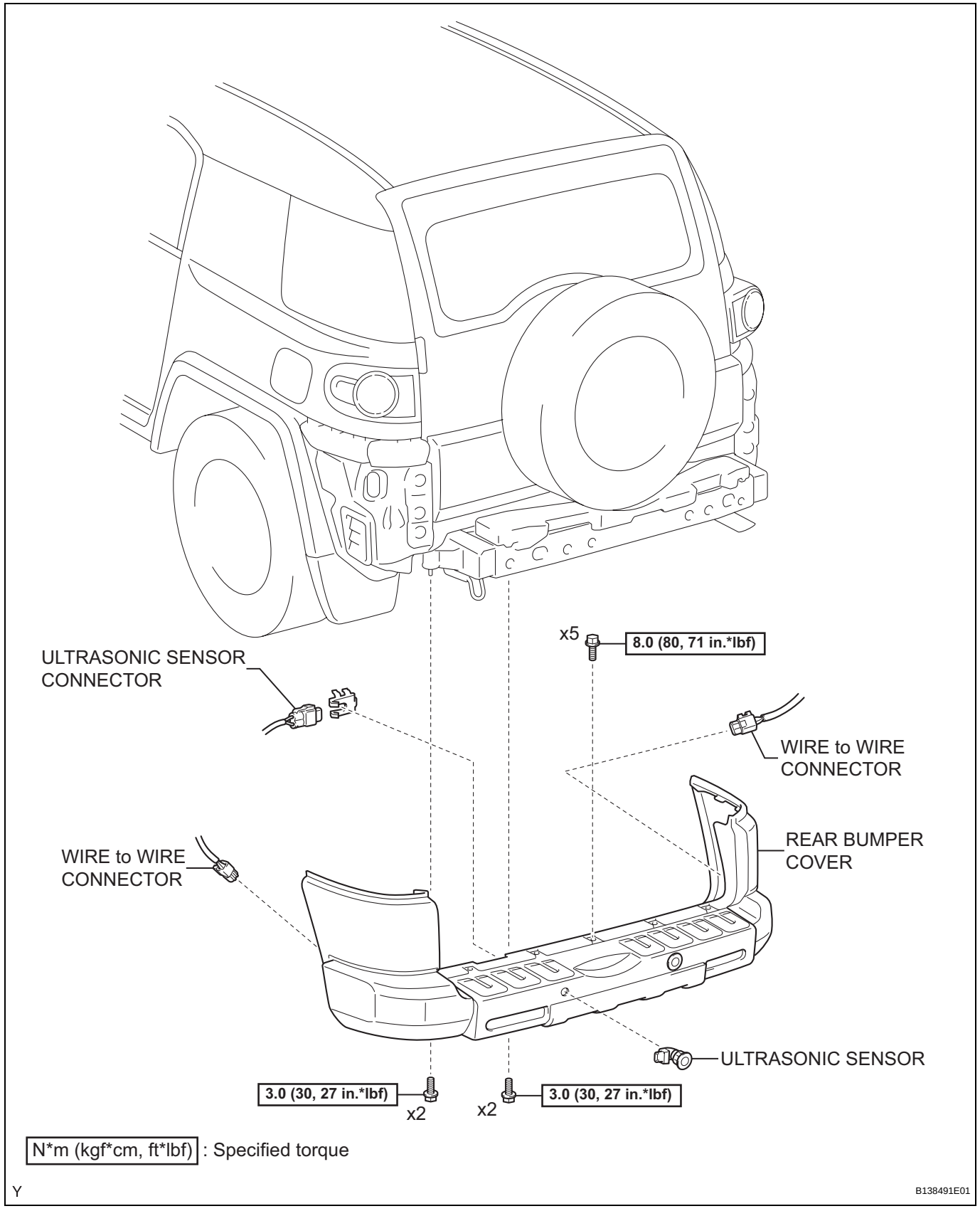

PM

REMOVAL

1. **DISCONNECT CABLE FROM NEGATIVE BATTERY TERMINAL**
2. **REMOVE REAR BUMPER COVER (See page ET-17)**
3. **REMOVE ULTRASONIC SENSOR**
   (a) Disconnect the ultrasonic sensor connector.
   (b) Remove the retainer and the ultrasonic sensor as shown in the illustration.

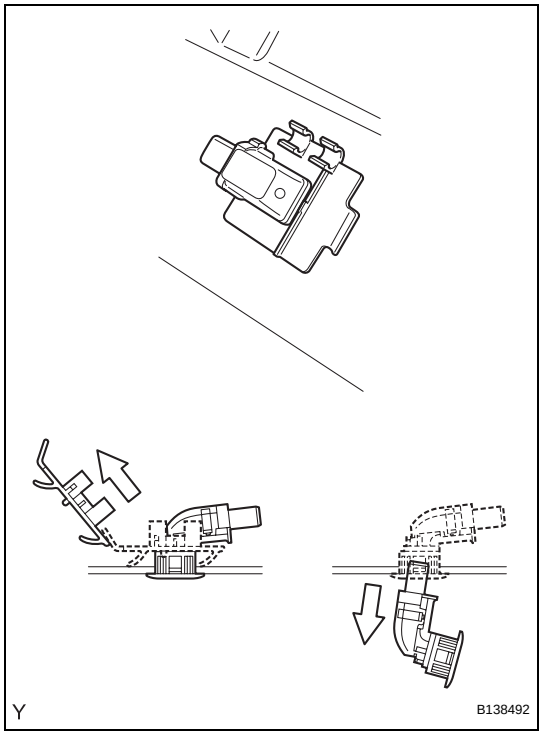

INSPECTION

1. **INSPECT ULTRASONIC SENSOR**
   (a) Check the resistance.
      (1) Using an ohmmeter, measure the resistance between the terminals.
      Standard resistance

Tester Connection	Specified Condition
1 (E) - 2 (S)	8 to 12 kΩ

If the result is not as specified, replace the ultrasonic sensor.

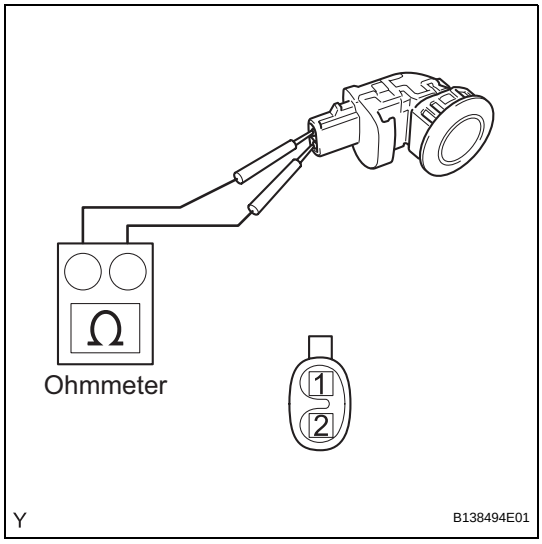

PM

INSTALLATION

HINT:
The procedure described below is for the LH side. Use the same procedure for both the RH and LH sides, unless otherwise specified.

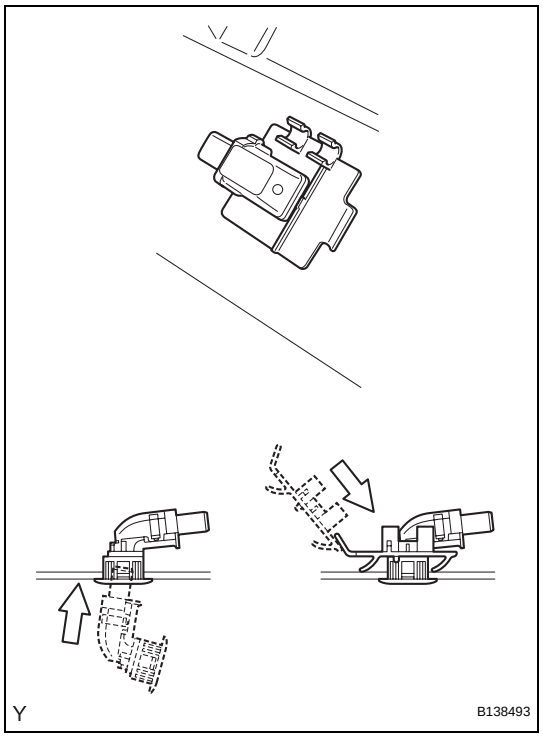

1. **INSTALL ULTRASONIC SENSOR**
   (a) Install the ultrasonic sensor with the retainer as shown in the illustration.
   (b) Connect the ultrasonic sensor connector.
2. **INSTALL REAR BUMPER COVER (See page ET-25)**
3. **CONNECT CABLE TO NEGATIVE BATTERY TERMINAL**
   Torque: 3.9 N*m (40 kgf*cm, 35 in.*lbf)

BACK SONAR SWITCH ASSEMBLY

COMPONENTS

for Automatic Transmission 4WD:

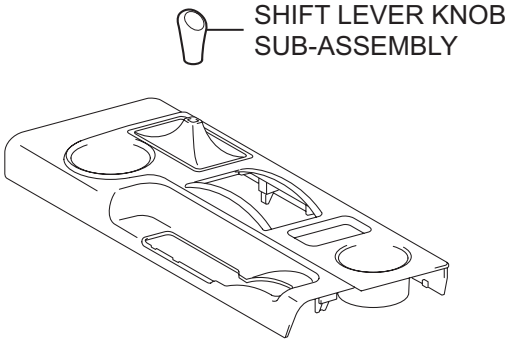

for Manual Transmission:

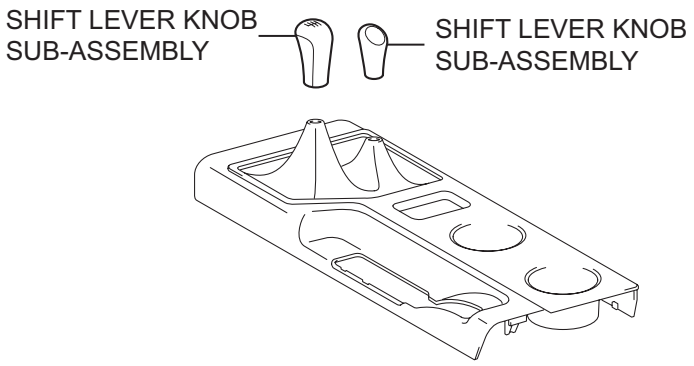

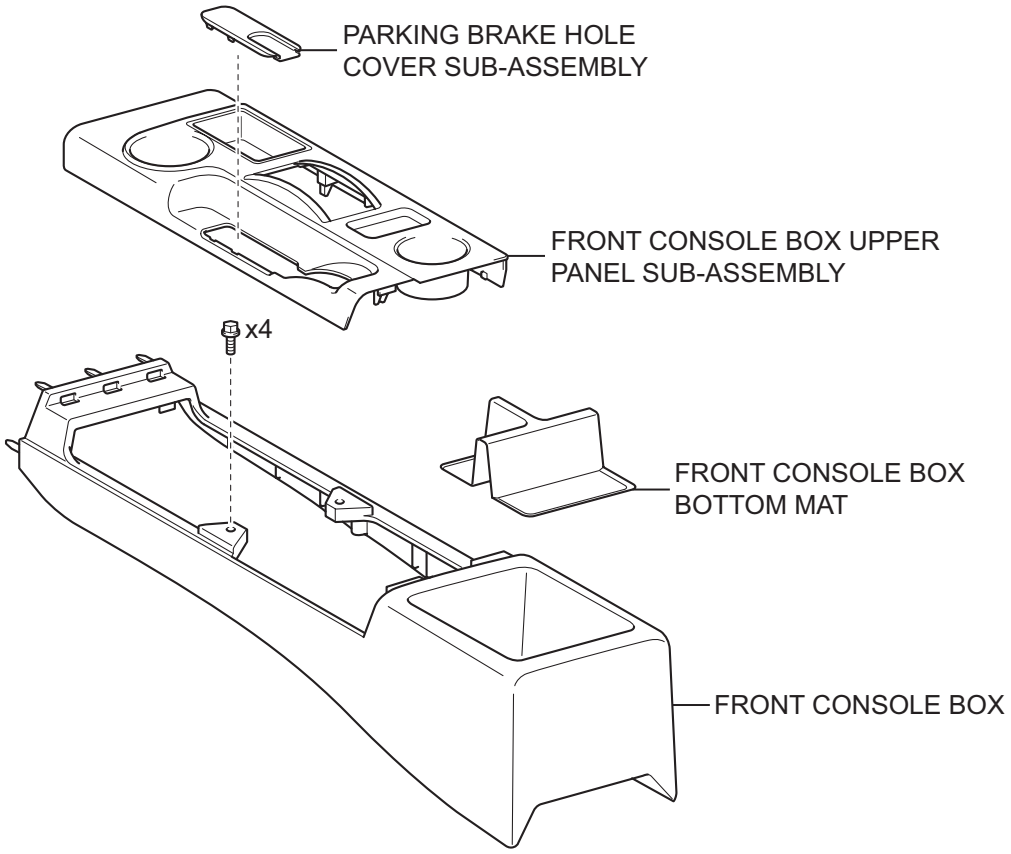

Y

B135184E01

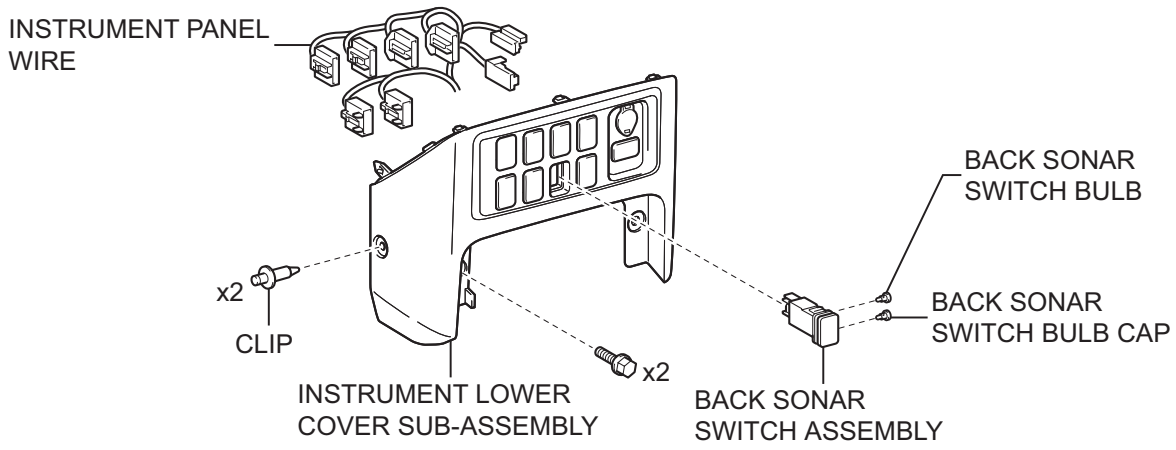

Y

B138461E01

REMOVAL

1. **DISCONNECT CABLE FROM NEGATIVE BATTERY TERMINAL**
2. **REMOVE SHIFT LEVER KNOB SUB-ASSEMBLY (for Manual Transmission) (See page IP-11)**
3. **REMOVE SHIFT LEVER KNOB SUB-ASSEMBLY (for 4WD) (See page IP-11)**
4. **REMOVE PARKING BRAKE HOLE COVER SUB-ASSEMBLY (See page IP-11)**
5. **REMOVE FRONT CONSOLE BOX UPPER PANEL SUB-ASSEMBLY (See page IP-12)**
6. **REMOVE FRONT CONSOLE BOX BOTTOM MAT (See page IP-12)**
7. **REMOVE FRONT CONSOLE BOX (See page IP-12)**
8. **REMOVE INSTRUMENT LOWER COVER SUB-ASSEMBLY (See page IP-13)**
9. **REMOVE BACK SONAR SWITCH ASSEMBLY**
   (a) Disengage the 2 claws and remove the back sonar switch.

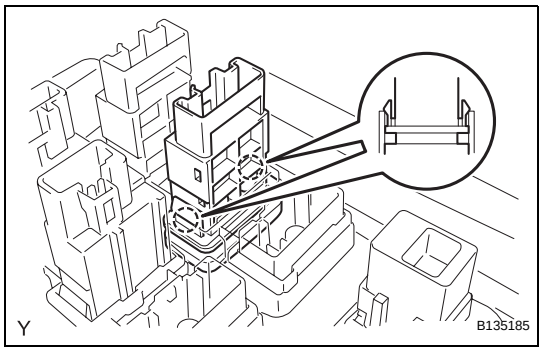

PM

10. **REMOVE BACK SONAR SWITCH BULB**
    (a) Remove the back sonar switch bulb.

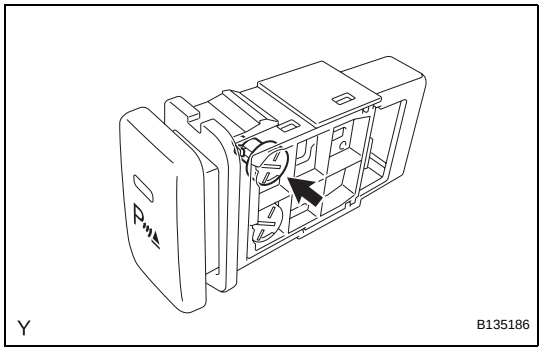

11. **REMOVE BACK SONAR SWITCH BULB CAP**
    (a) Remove the back sonar switch bulb cap.

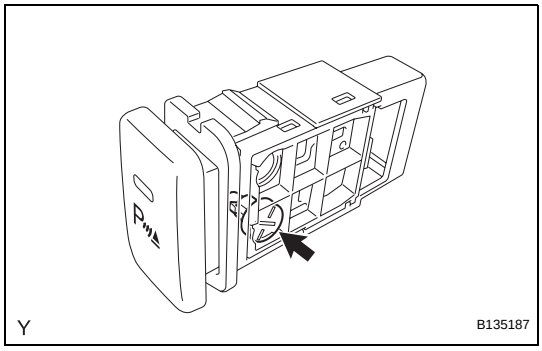

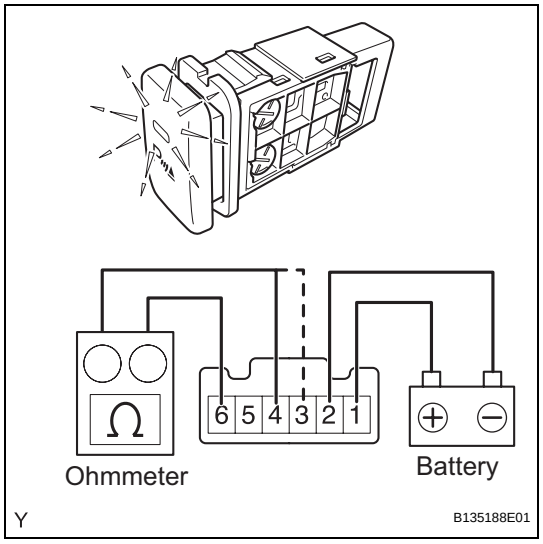

INSPECTION

1. INSPECT BACK SONAR SWITCH ASSEMBLY

(a) Check the resistance.

(1) Using an ohmmeter, measure the resistance between the terminals.

Standard resistance

Tester Connection	Condition	Specified Condition
4 (ECU) - 6 (E)	OFF	Below 1 Ω
3 (IG) - 6 (E)	ON	Below 1 Ω
4 (ECU) - 6 (E)		Below 1 Ω

If the result is not as specified, replace the back sonar switch.

(b) Check the operation.

(1) Apply battery voltage to the terminals and check that the indicator illuminates.

Standard

Condition	Standard
Positive battery - Terminal 1 (ILL+) Negative battery - Terminal 2 (ILL-)	Illuminates

If the result is not as specified, check the back sonar switch bulb.

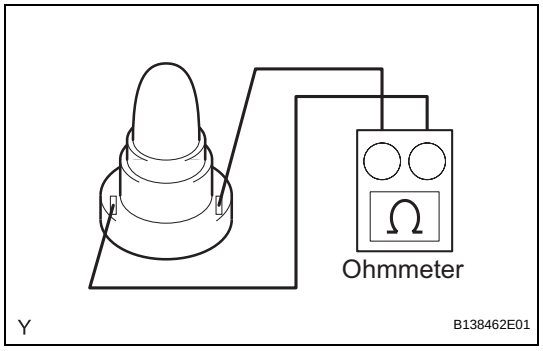

2. INSPECT BACK SONAR SWITCH BULB

(a) Check the resistance.

(1) Using an ohmmeter, measure the resistance between the terminals.

Standard resistance:

7 to 11 Ω at 20°C (68°F)

If the result is not as specified, replace the back sonar switch bulb.

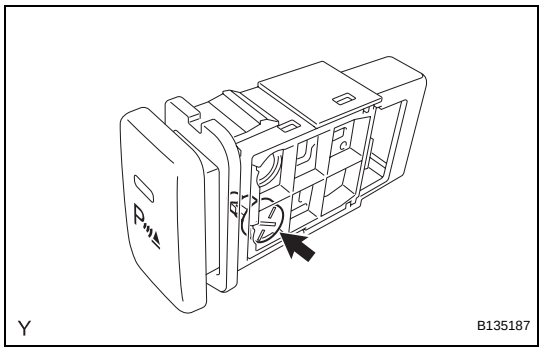

INSTALLATION

1. INSTALL BACK SONAR SWITCH BULB CAP

(a) Install the back sonar switch bulb cap.

PM

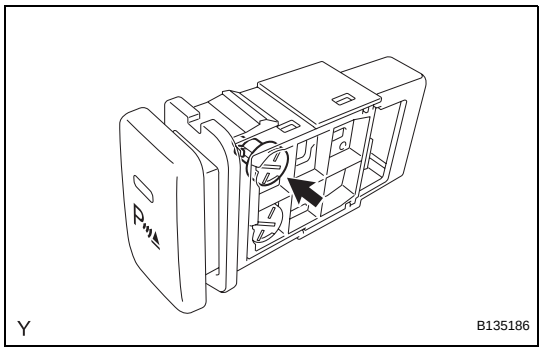

2. **INSTALL BACK SONAR SWITCH BULB**
   (a) Install the back sonar switch bulb.

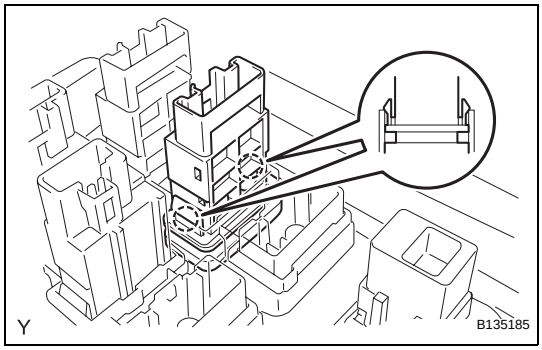

3. **INSTALL BACK SONAR SWITCH ASSEMBLY**
   (a) Engage the 2 claws and install the back sonar switch.
4. **INSTALL INSTRUMENT LOWER COVER SUB-ASSEMBLY (See page IP-30)**
5. **INSTALL FRONT CONSOLE BOX (See page IP-31)**
6. **INSTALL FRONT CONSOLE BOX BOTTOM MAT (See page IP-31)**
7. **INSTALL FRONT CONSOLE UPPER PANEL SUB-ASSEMBLY (See page IP-31)**
8. **INSTALL PARKING BRAKE HOLE COVER SUB-ASSEMBLY (See page IP-32)**
9. **INSTALL SHIFT LEVER KNOB SUB-ASSEMBLY (for 4WD) (See page IP-32)**
10. **INSTALL SHIFT LEVER KNOB SUB-ASSEMBLY (for Manual Transmission) (See page IP-32)**
11. **CONNECT CABLE TO NEGATIVE BATTERY TERMINAL**
    Torque: 3.9 N*m (40 kgf*cm, 35 in.*lbf)

PARKING BRAKE SYSTEM

PROBLEM SYMPTOMS TABLE

HINT:
Use the table below to help you find the cause of the problem. The numbers indicate the ranked order of probability of each of the possible causes. Check each part in the order suggested. If necessary, replace these parts.

Symptom	Suspected area	See page
Brake drag	1. Parking brake lever travel (Out of adjustment)	PB-4
	2. Parking brake wire (Sticking)	PB-11
	3. Parking brake shoe clearance (Out of adjustment)	PB-20
	4. Parking brake shoe lining (Cracked or distorted)	PB-18
	5. Tension or return spring (Damaged)	PB-17

PARKING BRAKE LEVER

COMPONENTS

PB

for Automatic Transmission 2WD:

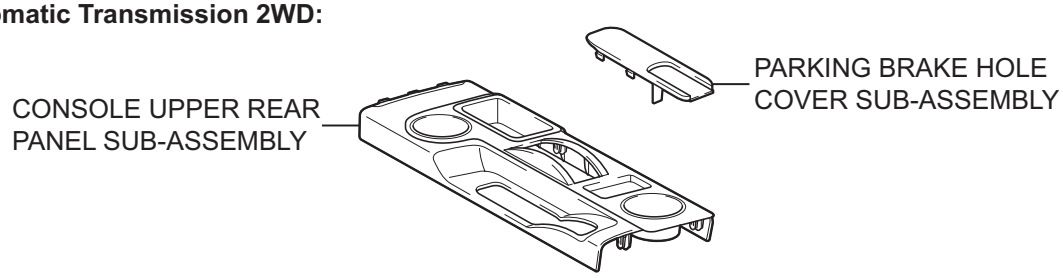

for Automatic Transmission 4WD:

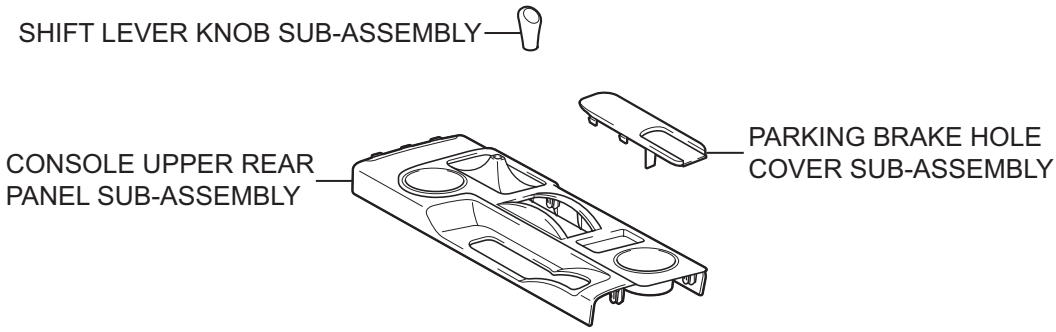

for Manual Transmission 4WD:

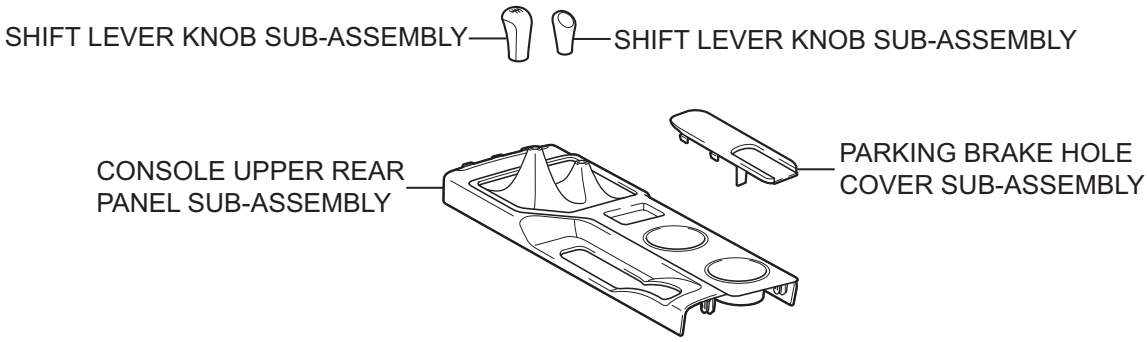

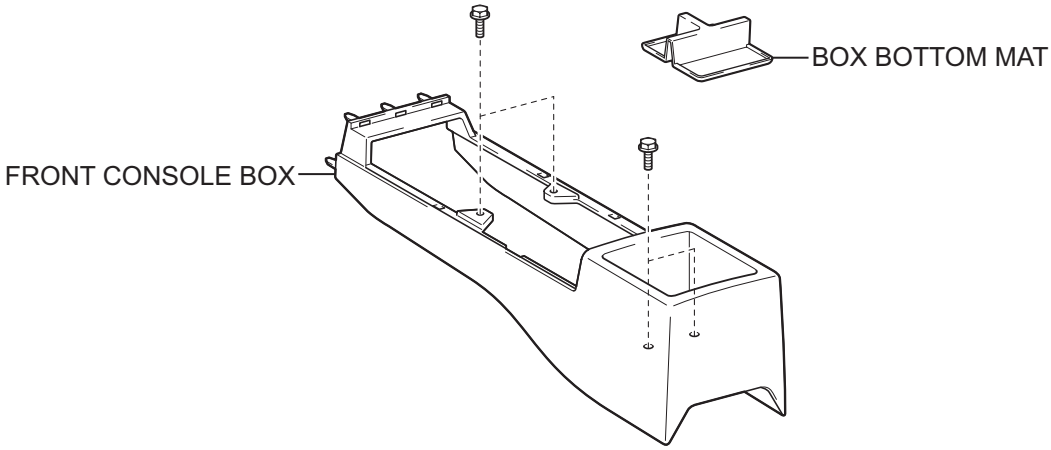

P

C133109E01

PB

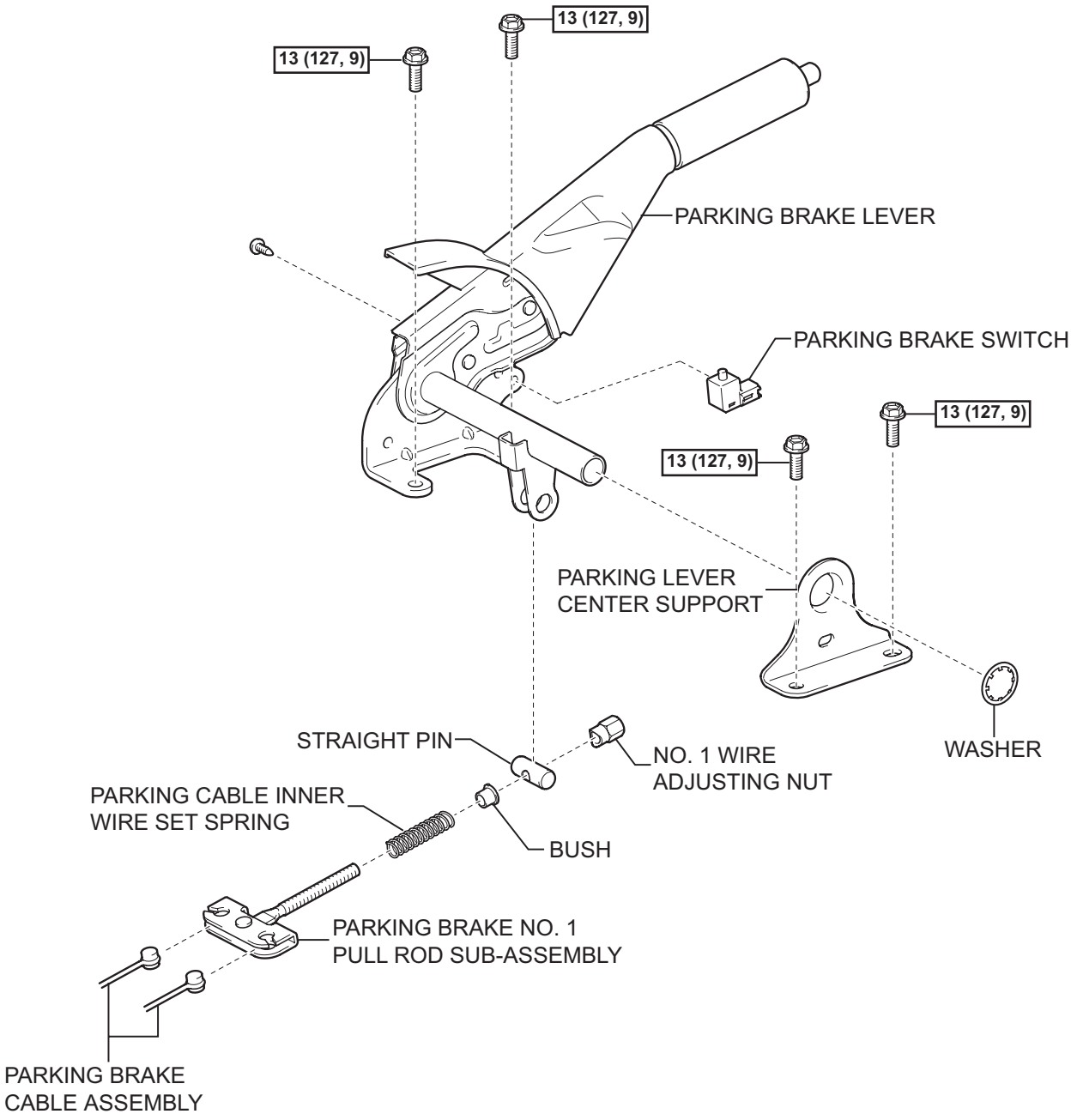

N*m (kgf*cm, ft*lbf) : Specified torque

P

C133092E01

PB

ON-VEHICLE INSPECTION

1. **REMOVE REAR WHEEL**
2. **ADJUST PARKING BRAKE SHOE CLEARANCE (See page PB-20)**
3. **INSTALL REAR WHEEL**
   Torque: 112 N*m (1,137 kgf*cm, 82 ft.*lbf)
4. **INSPECT PARKING BRAKE LEVER TRAVEL**
   (a) Slowly pull the parking brake lever to the fully applied position, counting the number of clicks.
   Parking brake lever travel:
   5 to 7 clicks at 200 N (20 kgf, 45 lbf)
5. **REMOVE PARKING BRAKE HOLE COVER SUB-ASSEMBLY (See page IP-11)**
6. **REMOVE SHIFT LEVER KNOB SUB-ASSEMBLY (for Manual Transmission) (See page IP-11)**
7. **REMOVE SHIFT LEVER KNOB SUB-ASSEMBLY (for 4WD) (See page IP-11)**
8. **REMOVE CONSOLE UPPER REAR PANEL SUB-ASSEMBLY (See page IP-12)**
9. **ADJUST PARKING BRAKE LEVER TRAVEL**
   (a) Turn the adjusting nut until the parking brake lever travel is corrected to within the specified range.
   Parking brake lever travel:
   5 to 7 clicks at 200 N (20 kgf, 45 lbf)
   (b) Operate the parking brake lever 3 to 4 times, and check the parking brake lever travel.
   (c) Check whether the parking brake drags or not.
   (d) When operating the parking brake lever, check that the brake warning light illuminates.
   Standard:
   Brake warning light always illuminates at the first click.
10. **INSTALL CONSOLE UPPER REAR PANEL SUB-ASSEMBLY (See page IP-31)**
11. **INSTALL SHIFT LEVER KNOB SUB-ASSEMBLY (for 4WD) (See page IP-32)**
12. **INSTALL SHIFT LEVER KNOB SUB-ASSEMBLY (for Manual Transmission) (See page IP-32)**
13. **INSTALL PARKING BRAKE HOLE COVER SUB-ASSEMBLY (See page IP-32)**

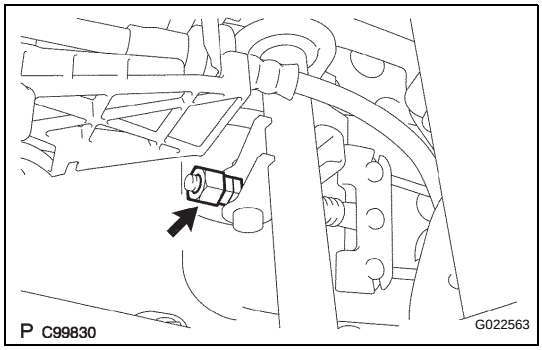

REMOVAL

1. **DISCONNECT CABLE FROM NEGATIVE BATTERY TERMINAL**
2. **REMOVE PARKING BRAKE HOLE COVER SUB-ASSEMBLY (See page IP-11)**
3. **REMOVE SHIFT LEVER KNOB SUB-ASSEMBLY (for Manual Transmission) (See page IP-11)**
4. **REMOVE SHIFT LEVER KNOB SUB-ASSEMBLY (for 4WD) (See page IP-11)**
5. **REMOVE CONSOLE UPPER REAR PANEL SUB-ASSEMBLY (See page IP-12)**
6. **REMOVE BOX BOTTOM MAT (See page IP-12)**
7. **REMOVE FRONT CONSOLE BOX (See page IP-13)**
8. **REMOVE PARKING BRAKE LEVER**
   (a) Release the parking brake lever.
   (b) Disconnect the parking brake switch connector.
   (c) Remove the adjusting nut.

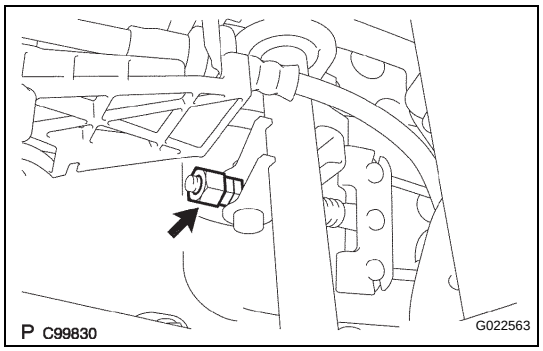

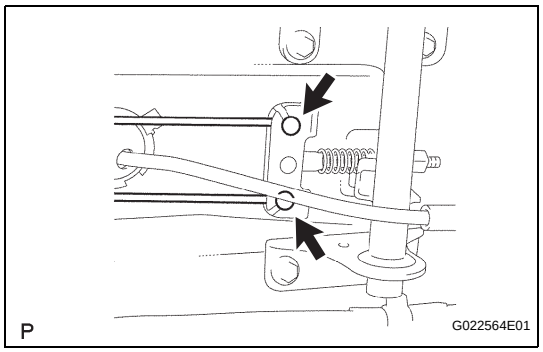

   (d) Disconnect parking brake cables No. 2 and No. 3 from the parking brake pull rod.
   (e) Remove the parking brake pull rod, bush and set spring.
   (f) Remove the straight pin from the parking brake lever.

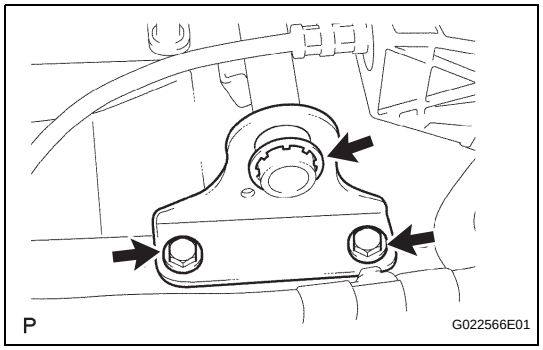

   (g) Remove the washer.
   (h) Remove the 2 bolts and center support from the parking brake lever.

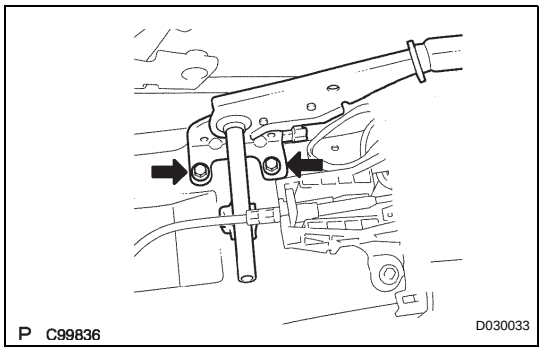

(i) Remove the 2 bolts and parking brake lever.

9. REMOVE PARKING BRAKE SWITCH

(a) Remove the screw and parking brake switch from the parking brake lever.

INSTALLATION

1. INSTALL PARKING BRAKE SWITCH

(a) Install the parking brake switch with the screw.

2. INSTALL PARKING BRAKE LEVER

(a) Install the parking brake lever and provisionally tighten the 2 bolts.

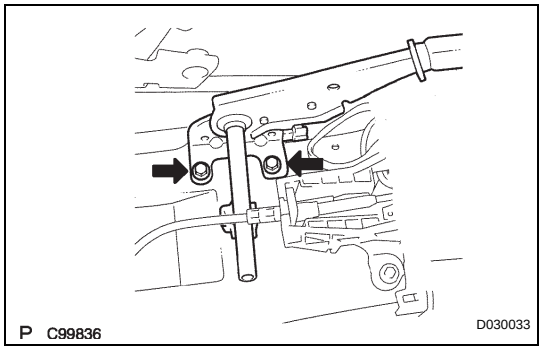

(b) Install the center support and washer onto the parking brake lever.

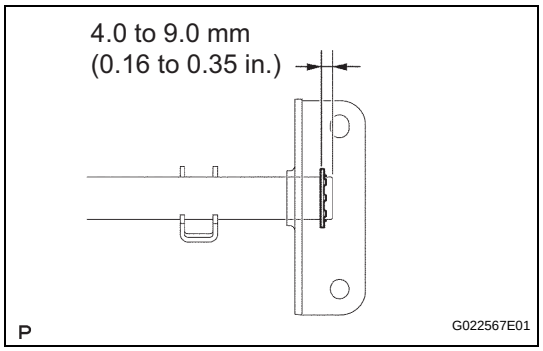

(c) Install the parking brake lever with the 4 bolts.
Torque: 13 N*m (127 kgf*cm, 9 ft.*lbf)

(d) Install the straight pin into the parking brake lever.

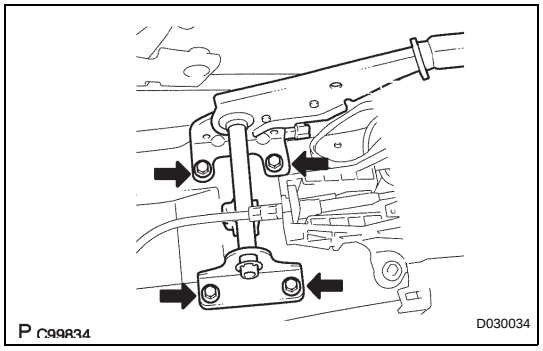

(e) Connect parking brake cables No. 2 and No. 3 to the parking brake pull rod.

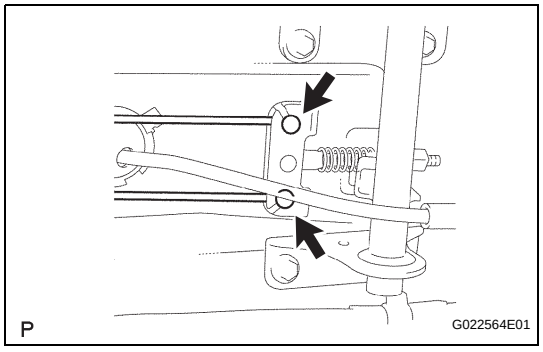

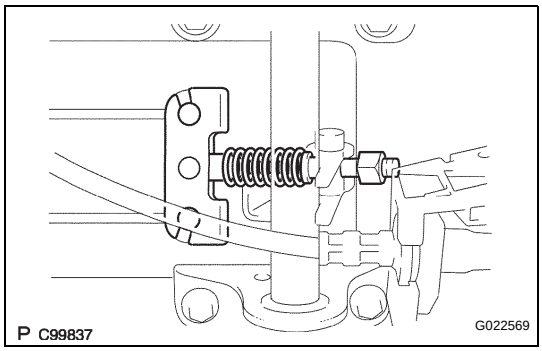

(f) Install the set spring, bush and parking brake pull rod with the adjusting nut.
(g) Connect the parking brake switch connector.

3. **INSPECT PARKING BRAKE LEVER TRAVEL (See page PB-4)**
4. **ADJUST PARKING BRAKE LEVER TRAVEL (See page PB-4)**
5. **INSTALL FRONT CONSOLE BOX (See page IP-30)**
6. **INSTALL BOX BOTTOM MAT (See page IP-31)**
7. **INSTALL CONSOLE UPPER REAR PANEL SUB-ASSEMBLY (See page IP-31)**
8. **INSTALL SHIFT LEVER KNOB SUB-ASSEMBLY (for 4WD) (See page IP-32)**
9. **INSTALL SHIFT LEVER KNOB SUB-ASSEMBLY (for Manual Transmission) (See page IP-32)**
10. **INSTALL PARKING BRAKE HOLE COVER SUB-ASSEMBLY (See page IP-32)**
11. **CONNECT CABLE TO NEGATIVE BATTERY TERMINAL**
    Torque: 3.9 N*m (40 kgf*cm, 35 in.*lbf)

PARKING BRAKE CABLE

COMPONENTS

for Automatic Transmission 2WD:

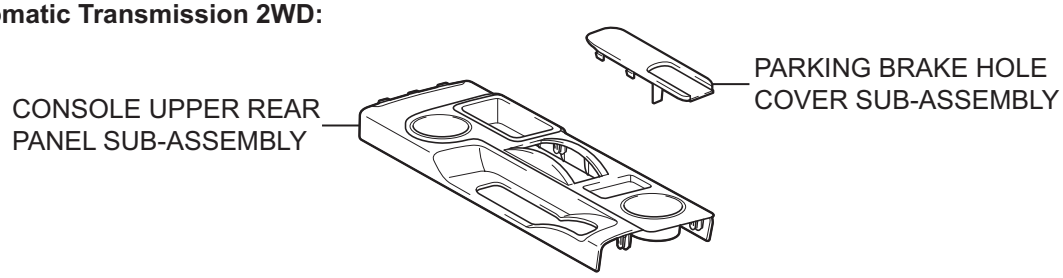

for Automatic Transmission 4WD:

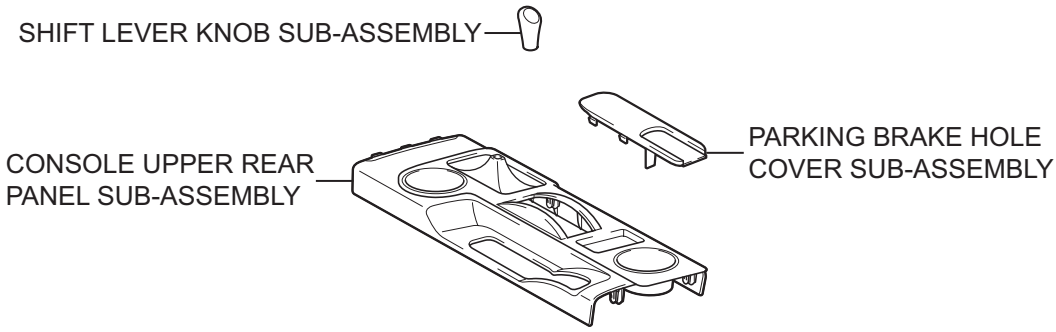

for Manual Transmission 4WD:

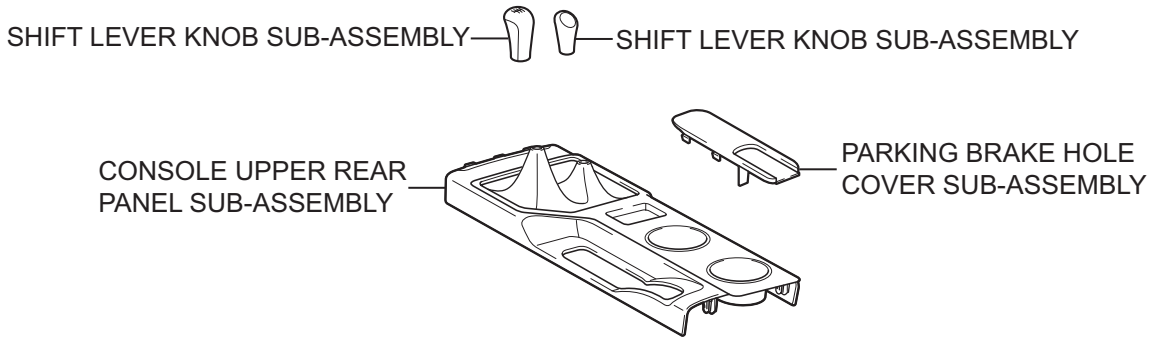

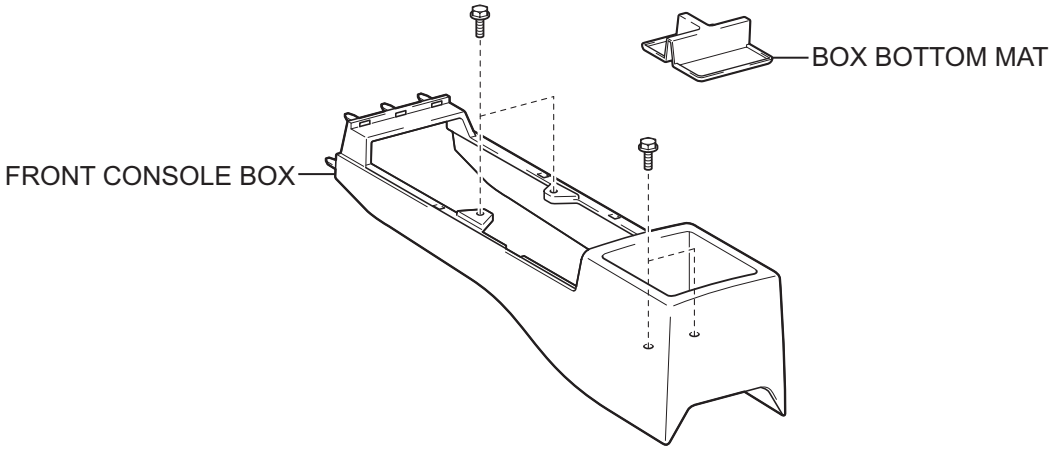

P

C133109E01

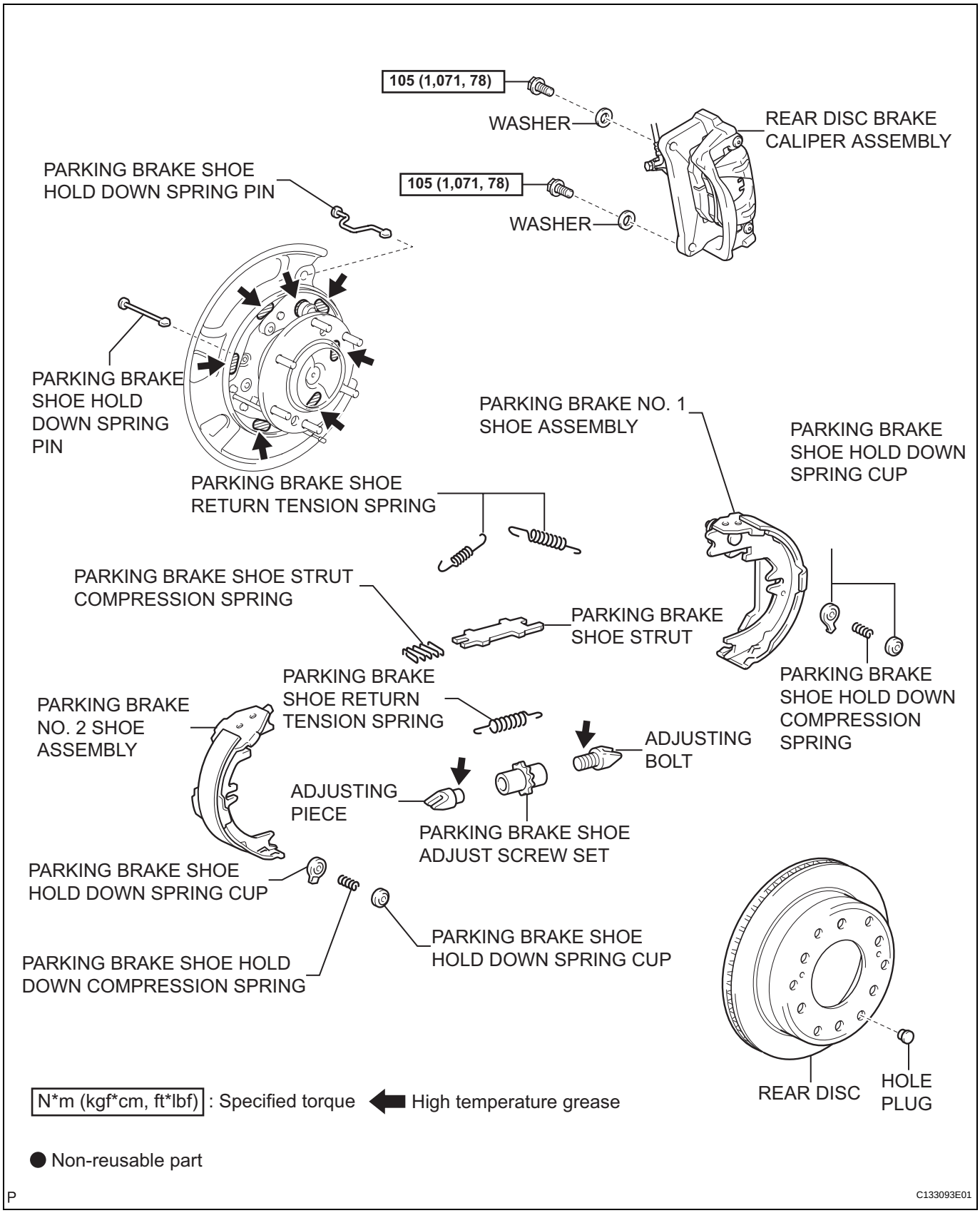
105 (1,071, 78)
WASHER
REAR DISC BRAKE CALIPER ASSEMBLY
105 (1,071, 78)
WASHER
PARKING BRAKE SHOE HOLD DOWN SPRING PIN
PARKING BRAKE SHOE HOLD DOWN SPRING PIN
PARKING BRAKE NO. 1 SHOE ASSEMBLY
PARKING BRAKE SHOE HOLD DOWN SPRING CUP
PARKING BRAKE SHOE RETURN TENSION SPRING
PARKING BRAKE SHOE STRUT COMPRESSION SPRING
PARKING BRAKE SHOE STRUT
PARKING BRAKE SHOE HOLD DOWN COMPRESSION SPRING
PARKING BRAKE SHOE RETURN TENSION SPRING
PARKING BRAKE NO. 2 SHOE ASSEMBLY
ADJUSTING BOLT
ADJUSTING PIECE
PARKING BRAKE SHOE ADJUST SCREW SET
PARKING BRAKE SHOE HOLD DOWN SPRING CUP
PARKING BRAKE SHOE HOLD DOWN SPRING CUP
PARKING BRAKE SHOE HOLD DOWN COMPRESSION SPRING
REAR DISC
HOLE PLUG
N*m (kgf*cm, ft*lbf) : Specified torque
High temperature grease
● Non-reusable part
P
C133093E01

PB

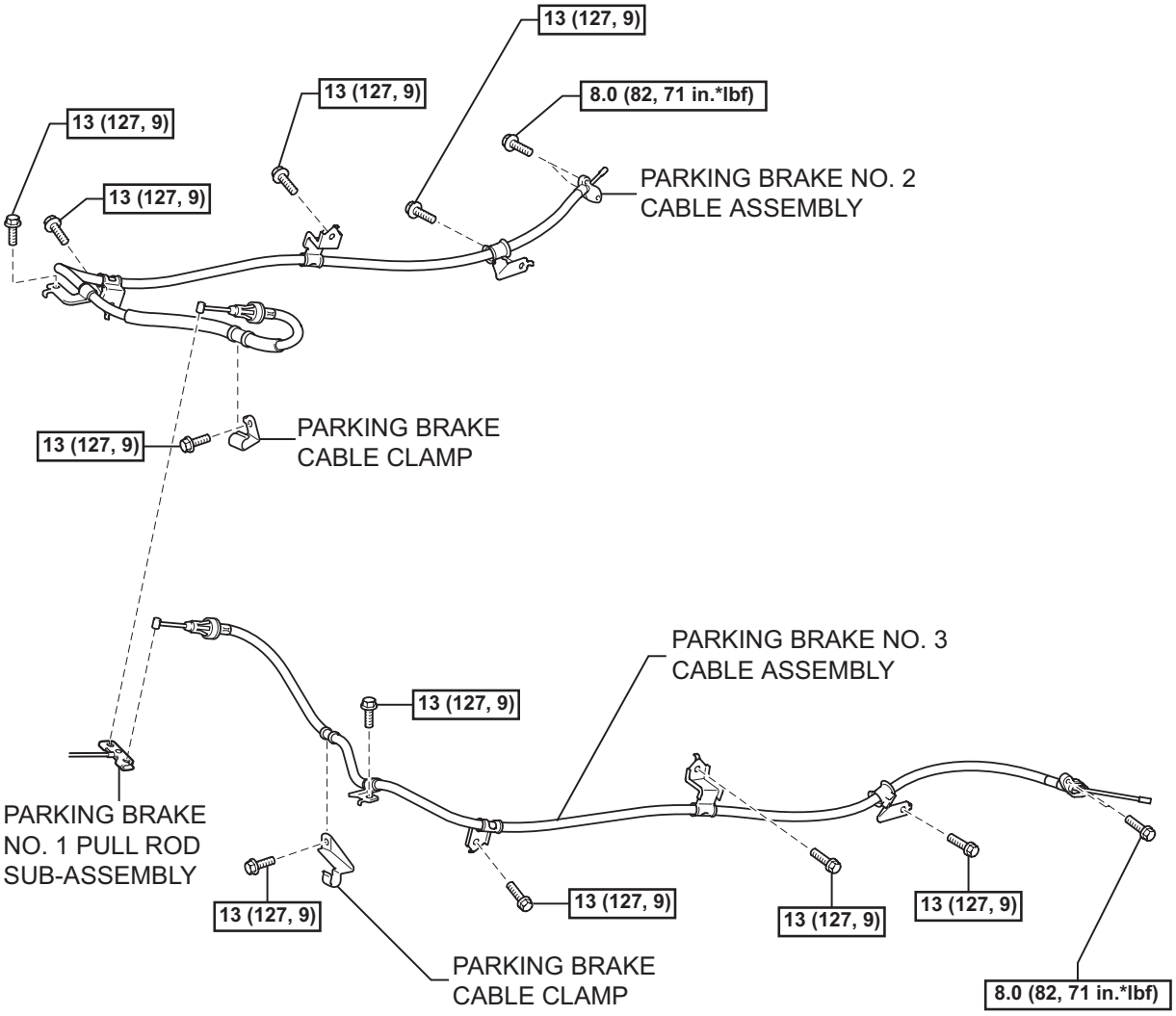

for RH Side:

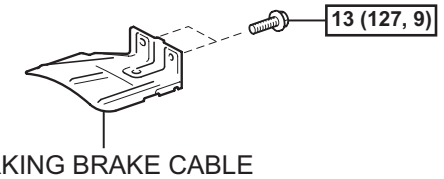

N*m (kgf*cm, ft*lbf) : Specified torque

P

C133094E01

REMOVAL

1. **REMOVE PARKING BRAKE HOLE COVER SUB-ASSEMBLY (See page IP-11)**
2. **REMOVE SHIFT LEVER KNOB SUB-ASSEMBLY (for Manual Transmission) (See page IP-11)**
3. **REMOVE SHIFT LEVER KNOB SUB-ASSEMBLY (for 4WD) (See page IP-11)**
4. **REMOVE CONSOLE UPPER REAR PANEL SUB-ASSEMBLY (See page IP-12)**
5. **REMOVE BOX BOTTOM MAT (See page IP-12)**
6. **REMOVE FRONT CONSOLE BOX (See page IP-13)**
7. **REMOVE REAR WHEEL**
8. **SEPARATE REAR DISC BRAKE CALIPER ASSEMBLY (See page PB-17)**
9. **REMOVE REAR DISC (See page PB-17)**
10. **REMOVE PARKING BRAKE SHOE RETURN TENSION SPRING (See page PB-17)**
11. **REMOVE PARKING BRAKE SHOE STRUT (See page PB-17)**
12. **REMOVE PARKING BRAKE SHOE (See page PB-17)**
13. **REMOVE PARKING BRAKE CABLE HEAT INSULATOR (for RH Side)**
    (a) Remove the 2 bolts and the heat insulator.

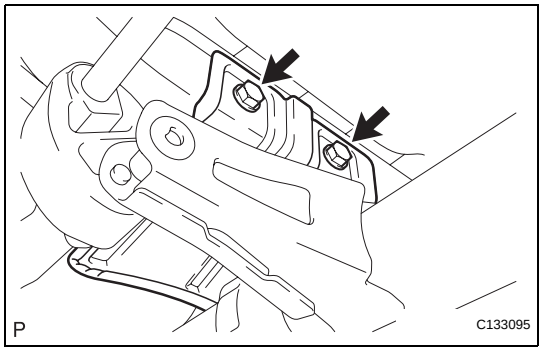

14. **REMOVE PARKING BRAKE CABLE**
    (a) Loosen the adjusting nut.

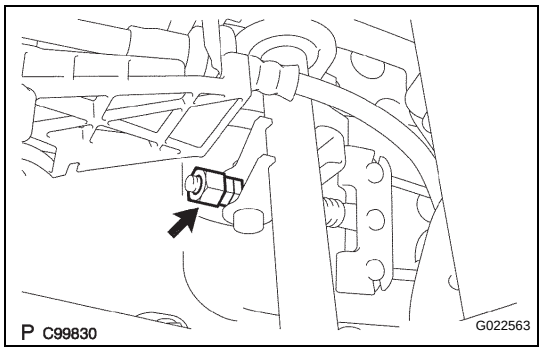

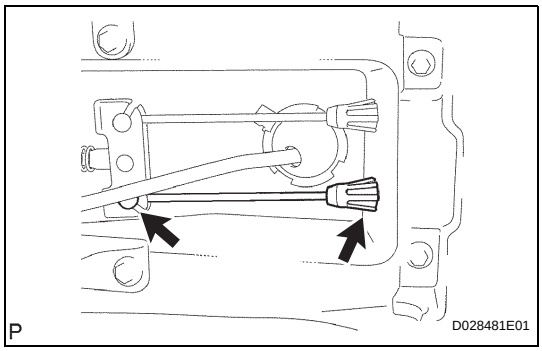

(b) Disconnect the cable end from the parking brake pull rod.
(c) Contract the claws of the spring cap and push the parking brake cable slightly out of the vehicle.

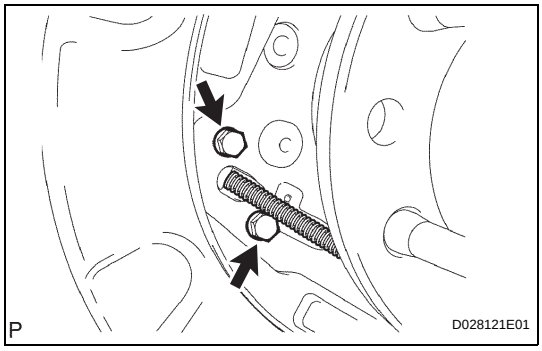

(d) Remove the 2 bolts and separate the parking brake cable from the parking brake plate.

(e) Remove the 5 bolts and the parking brake cable.

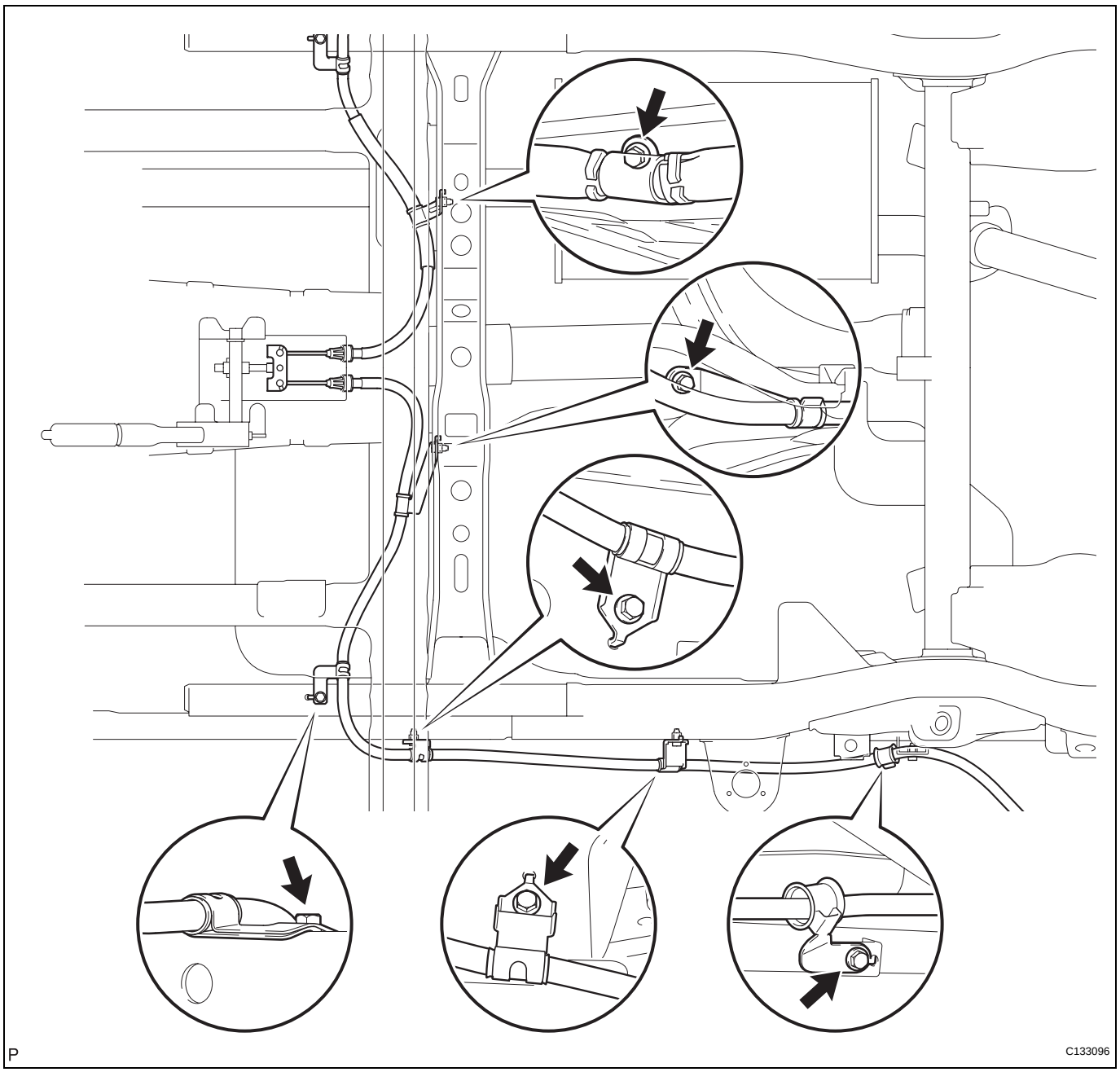

15. REMOVE PARKING BRAKE CABLE CLAMP

(a) Remove the parking brake cable clamp from the parking brake cable.

INSTALLATION

1. INSTALL PARKING BRAKE CABLE CLAMP

(a) Install the parking brake cable clamp onto the parking brake cable.

2. INSTALL PARKING BRAKE CABLE

(a) Install the parking brake cable with the 5 bolts.
Torque: 13 N*m (127 kgf*cm, 9 ft.*lbf)

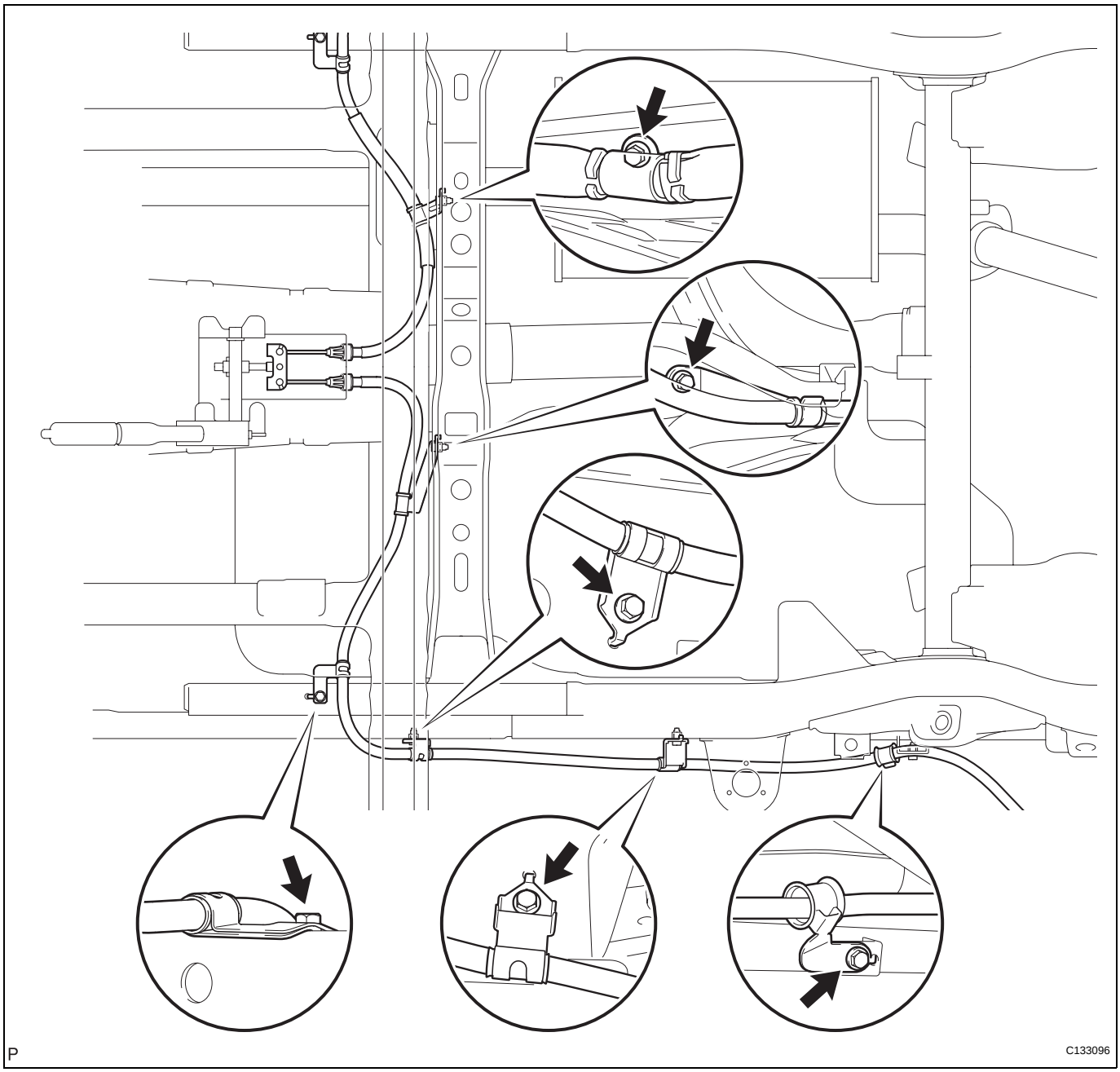

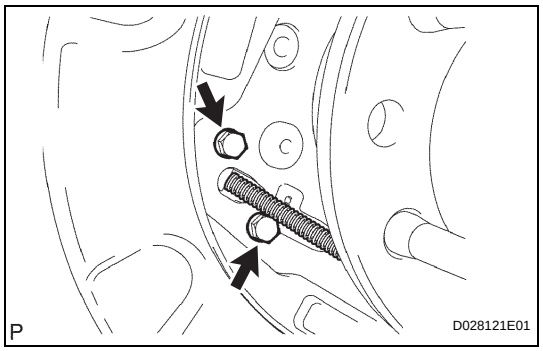

(b) Install the parking brake cable to the parking brake plate with the 2 bolts.
Torque: 8.0 N*m (82 kgf*cm, 71 in.*lbf)

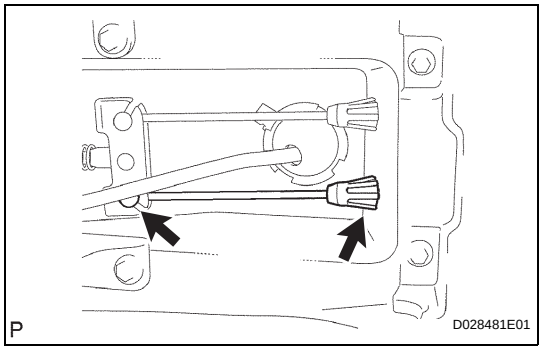

(c) Install the spring cap into the body.
(d) Connect the cable end to the parking brake pull rod.

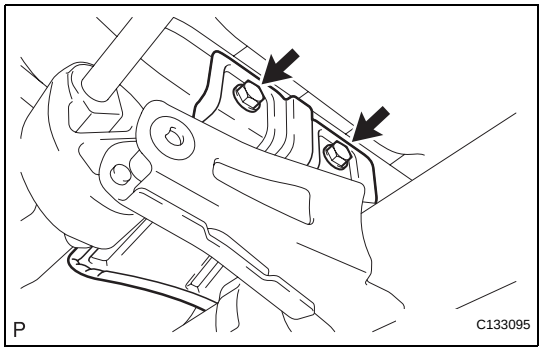

3. **INSTALL PARKING BRAKE CABLE HEAT INSULATOR (for RH Side)**
   (a) Install the heat insulator with the 2 bolts.
   Torque: 13 N*m (127 kgf*cm, 9 ft.*lbf)
4. **APPLY HIGH TEMPERATURE GREASE (See page PB-19)**
5. **INSTALL PARKING BRAKE SHOE (See page PB-19)**
6. **INSTALL PARKING BRAKE SHOE STRUT (See page PB-19)**
7. **INSTALL PARKING BRAKE SHOE RETURN TENSION SPRING (See page PB-19)**
8. **CHECK PARKING BRAKE INSTALLATION (See page PB-20)**
9. **INSTALL REAR DISC (See page PB-20)**
10. **ADJUST PARKING BRAKE SHOE CLEARANCE (See page PB-20)**
11. **INSTALL REAR DISC BRAKE CALIPER ASSEMBLY (See page PB-20)**
12. **INSTALL REAR WHEEL**
    Torque: 112 N*m (1,137 kgf*cm, 82 ft.*lbf)
13. **INSPECT PARKING BRAKE LEVER TRAVEL (See page PB-4)**
14. **ADJUST PARKING BRAKE LEVER TRAVEL (See page PB-4)**
15. **INSTALL FRONT CONSOLE BOX (See page IP-30)**
16. **INSTALL BOX BOTTOM MAT (See page IP-31)**

17. **INSTALL CONSOLE UPPER REAR PANEL SUB-ASSEMBLY (See page IP-31)**
18. **INSTALL SHIFT LEVER KNOB SUB-ASSEMBLY (for 4WD) (See page IP-32)**
19. **INSTALL SHIFT LEVER KNOB SUB-ASSEMBLY (for Manual Transmission) (See page IP-32)**
20. **INSTALL PARKING BRAKE HOLE COVER SUB-ASSEMBLY (See page IP-32)**

PARKING BRAKE ASSEMBLY

COMPONENTS

PB

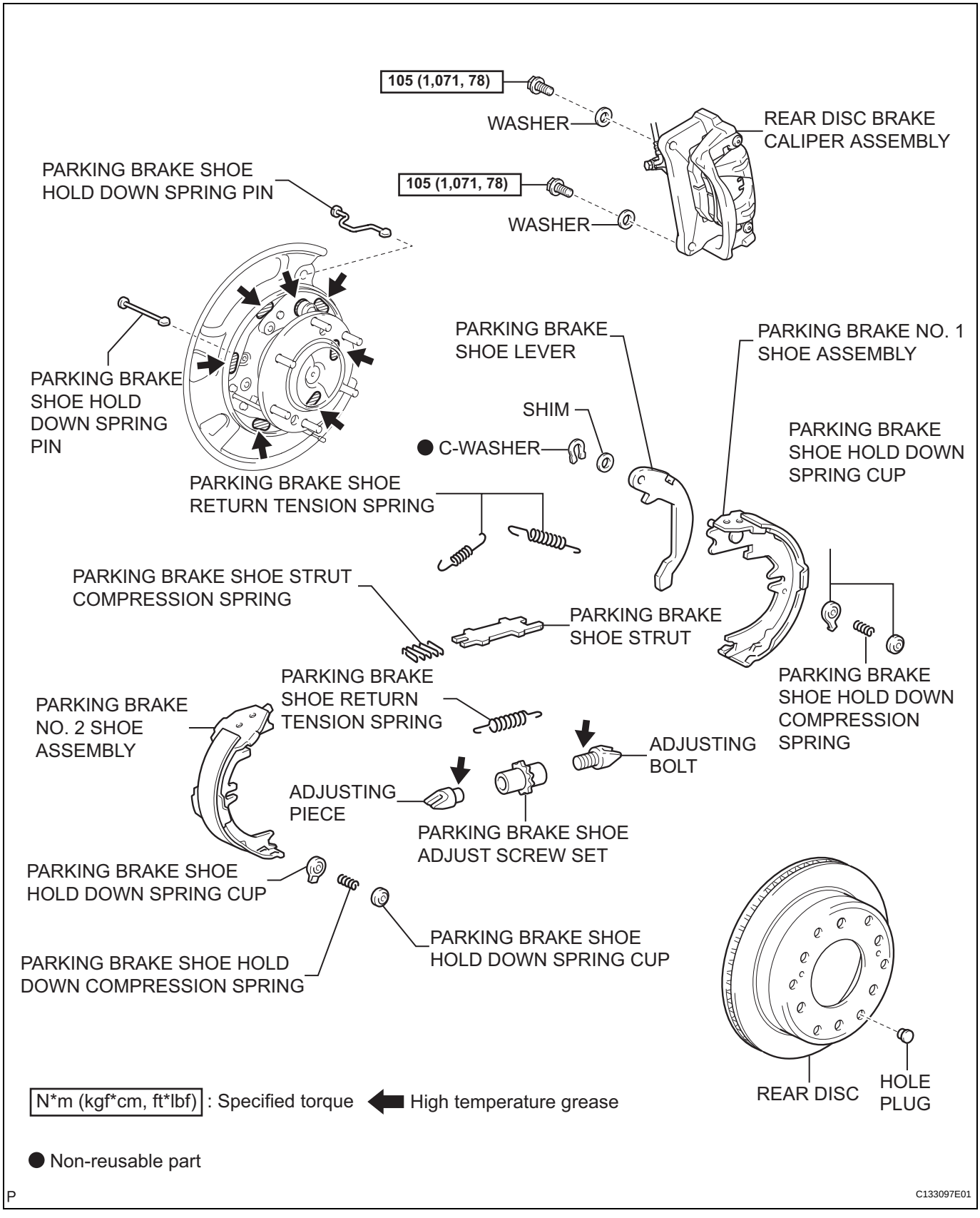

REMOVAL

1. REMOVE REAR WHEEL

2. SEPARATE REAR DISC BRAKE CALIPER ASSEMBLY

(a) Remove the 2 bolts and 2 washers and separate the disc brake caliper assembly.

NOTICE:
Suspend the disc brake caliper assembly with a piece of rope.

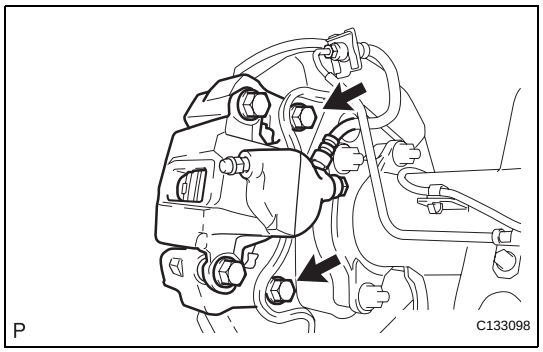

3. REMOVE REAR DISC

(a) Release the parking brake lever.

(b) Place matchmarks on the disc and axle hub and remove the disc.

HINT:
If the disc cannot be removed easily, turn the shoe adjuster until the wheel turns freely.

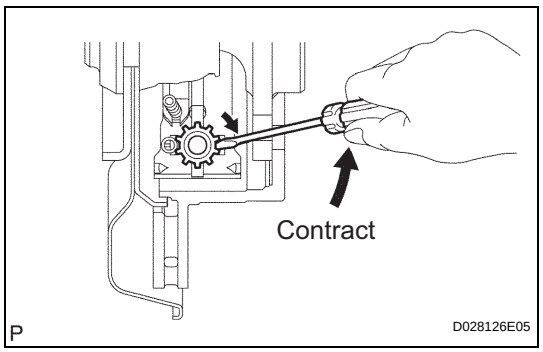

DISASSEMBLY

1. REMOVE PARKING BRAKE SHOE RETURN TENSION SPRING

(a) Using needle-nose pliers, remove the 2 return tension springs.

2. REMOVE PARKING BRAKE SHOE STRUT

(a) Remove the parking brake shoe strut and compression spring.

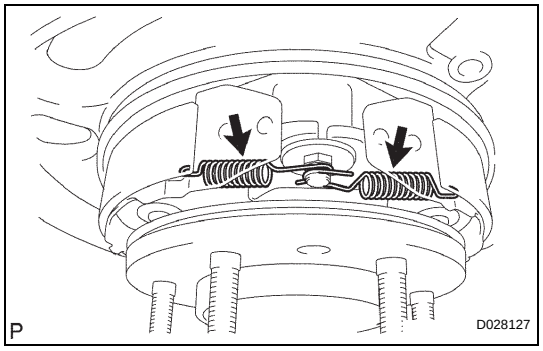

3. REMOVE PARKING BRAKE SHOE

(a) Remove the 2 hold down spring cups, hold down compression spring and hold down spring pin.

(b) Disconnect the return tension spring and remove the No. 2 shoe.

(c) Remove the shoe adjusting screw set and return tension spring.

(d) Remove the 2 hold down spring cups, hold down compression spring and hold down spring pin.

(e) Using needle-nose pliers, disconnect the parking brake cable and remove the No. 1 shoe.

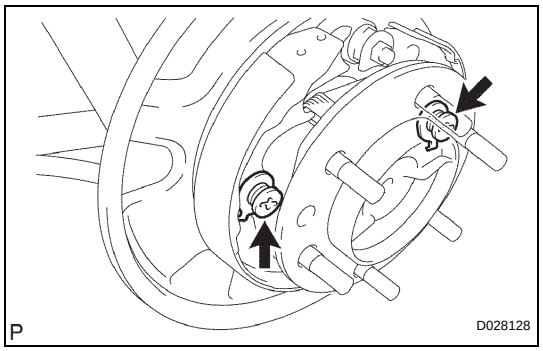

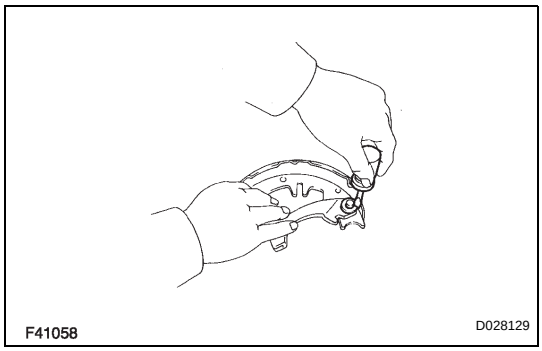

4. REMOVE PARKING BRAKE SHOE LEVER

(a) Using a screwdriver, remove the C-washer.

(b) Remove the shim and parking brake shoe lever from the No. 1 shoe.

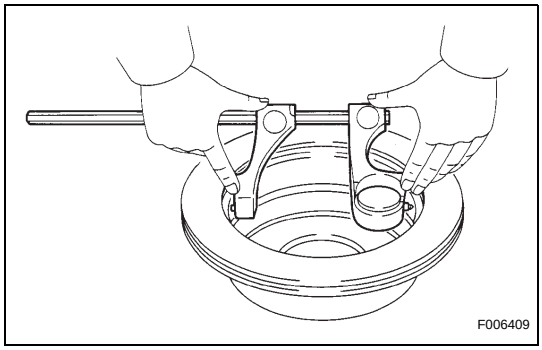

INSPECTION

1. INSPECT BRAKE DISC INSIDE DIAMETER

(a) Using a brake drum gauge or the equivalent, measure the inside diameter of the rear disc.

Standard inside diameter:
210 mm (8.268 in.)
Maximum inside diameter:
211 mm (8.307 in.)

If the inside diameter is greater than the maximum, replace the rear disc.

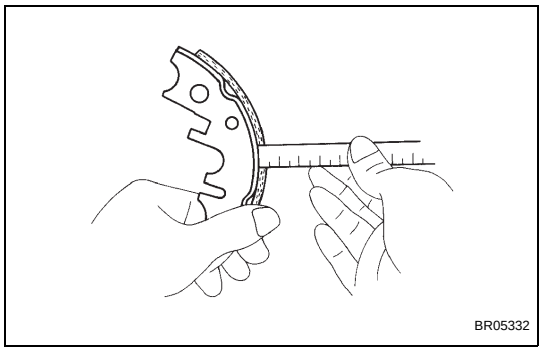

2. INSPECT PARKING BRAKE SHOE LINING THICKNESS

(a) Using a ruler, measure the thickness of the shoe lining.

Standard thickness:
4.0 mm (0.157 in.)
Minimum thickness:
1.0 mm (0.039 in.)

If the lining thickness is equal to or less than the minimum value, or if there is any severe or uneven wear, replace the brake shoe.

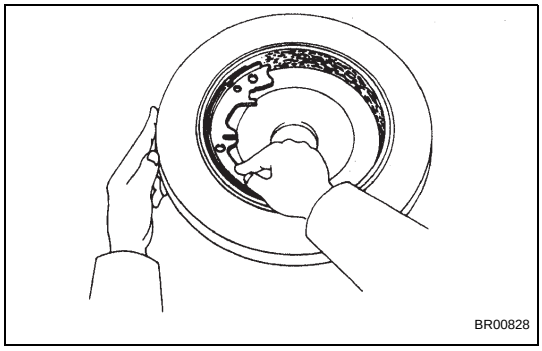

3. INSPECT BRAKE DISC AND PARKING BRAKE SHOE LINING FOR PROPER CONTACT

(a) Apply chalk to the inside surface of the disc, then grind the brake shoe lining so that they fit together properly.

If the contact between the disc and the shoe lining is improper, repair it using a brake shoe grinder or replace the brake shoe assembly.

REASSEMBLY

1. INSTALL PARKING BRAKE SHOE LEVER

(a) Using a feeler gauge, measure the clearance.

Standard clearance:
Less than 0.25 mm (0.0098 in.)

If the clearance is not within the specifications, replace the shim with one of the correct size.

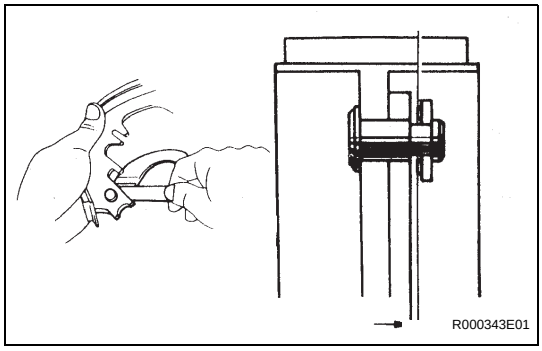

Part No.	Shim Thickness
90564-09184	0.3 mm (0.012 in.)
90564-09002	0.4 mm (0.016 in.)

Part No.	Shim Thickness
90564-09003	0.5 mm (0.020 in.)
90564-09185	0.6 mm (0.024 in.)
90564-09186	0.9 mm (0.035 in.)

(b) Using pliers, install the parking brake shoe lever and the shim with a new C-washer.

2. APPLY HIGH TEMPERATURE GREASE

(a) Apply high temperature grease to the surface of the backing plate which is in contact with the shoe.

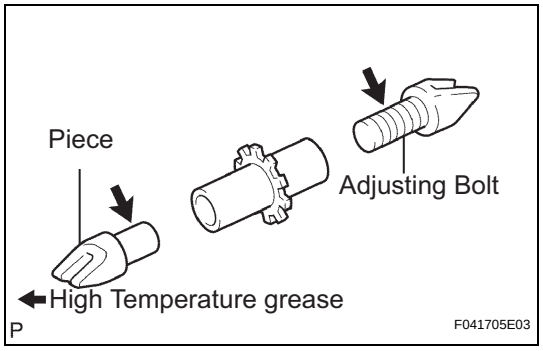

3. INSTALL PARKING BRAKE SHOE

(a) Apply high temperature grease to the adjusting bolt and piece.

(b) Using needle-nose pliers, connect the parking brake cable to the parking brake shoe lever.

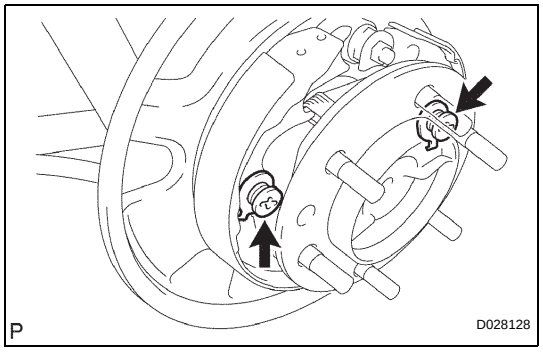

(c) Install the No. 1 shoe, hold down spring pin, hold down compression spring and 2 hold down spring cups.

(d) Install the return tension spring and shoe adjusting screw set.

(e) Install the No. 2 shoe, hold down spring pin, hold down compression spring and 2 hold down spring cups.

4. INSTALL PARKING BRAKE SHOE STRUT

(a) Attach the compression spring and parking brake shoe strut to the No. 2 and No. 1 shoes.

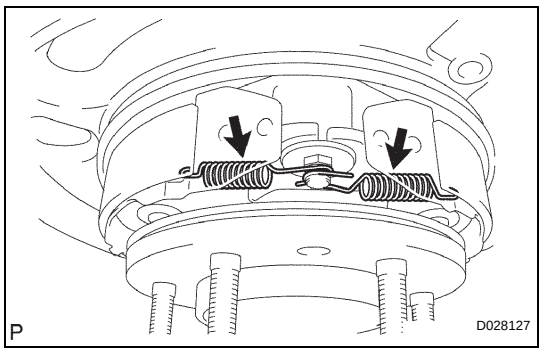

5. INSTALL PARKING BRAKE SHOE RETURN TENSION SPRING

(a) Using needle-nose pliers, install the 2 return tension springs.

HINT:

First install the front side spring then install the rear side spring.

6. CHECK PARKING BRAKE INSTALLATION

(a) Check that each part is installed properly.

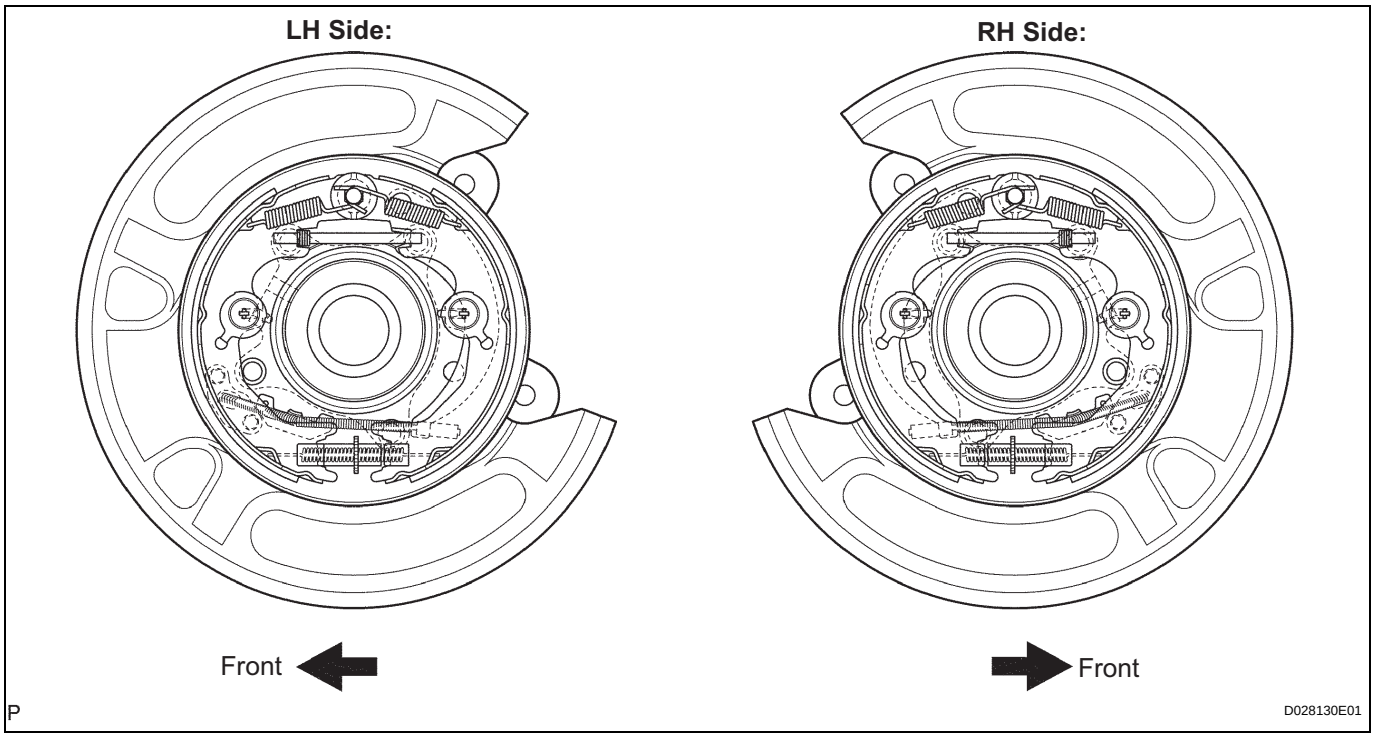

NOTICE:
There should be no oil or grease adhering to the friction surfaces of the shoe lining or the disc.

INSTALLATION

1. INSTALL REAR DISC

(a) Align the matchmarks of the disc and axle hub and install the disc.

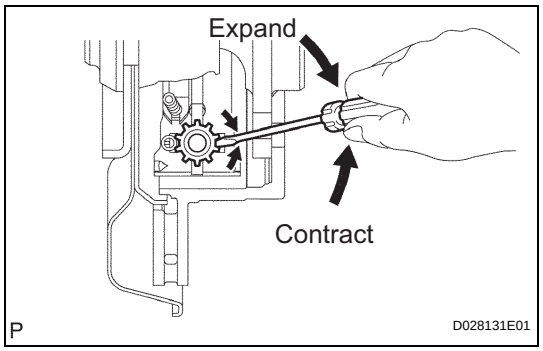

2. ADJUST PARKING BRAKE SHOE CLEARANCE

(a) Provisionally install the 2 hub nuts.

(b) Remove the hole plug, and turn the adjuster to expand the shoe until the disc locks.

(c) Contract the shoe adjuster until the disc rotates smoothly.

Standard:

Return 8 notches

(d) Install the hole plug.

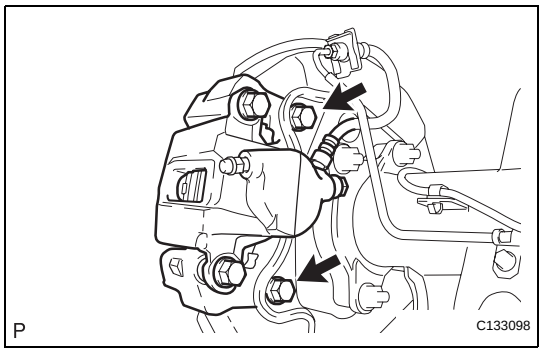

3. INSTALL REAR DISC BRAKE CALIPER ASSEMBLY

(a) Install the disc brake caliper with the 2 bolts and 2 washers.

Torque: 105 N*m (1,071 kgf*cm, 78 ft.*lbf)

4. INSTALL REAR WHEEL

Torque: 112 N*m (1,137 kgf*cm, 82 ft.*lbf)

5. INSPECT PARKING BRAKE LEVER TRAVEL (See page PB-4)

6. ADJUST PARKING BRAKE LEVER TRAVEL (See page PB-4)

PARKING BRAKE SWITCH

COMPONENTS

for Automatic Transmission 2WD:

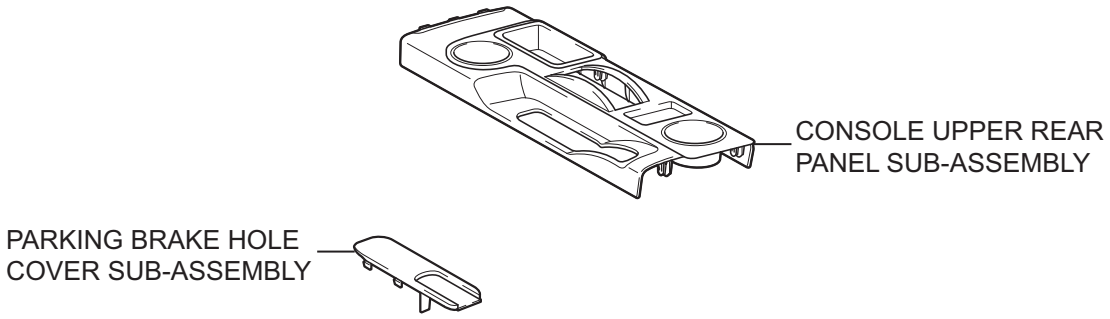

for Automatic Transmission 4WD:

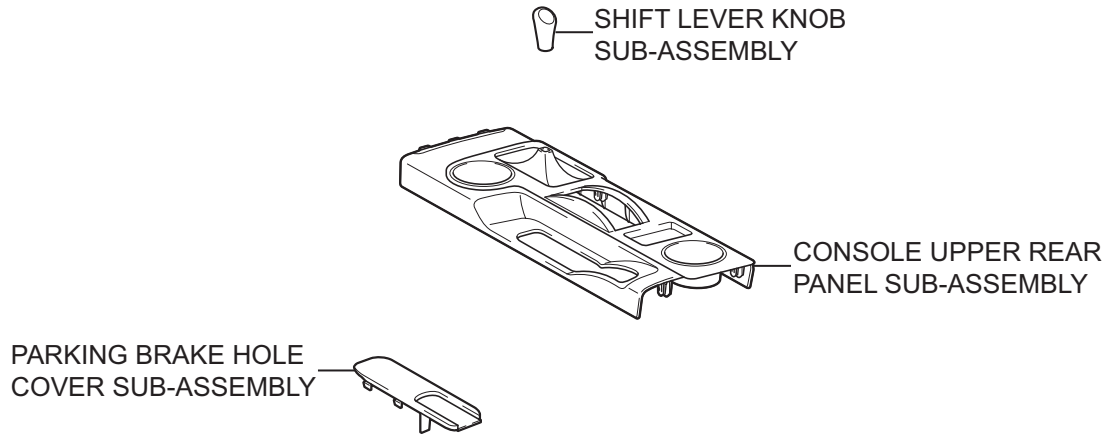

for Manual Transmission 4WD:

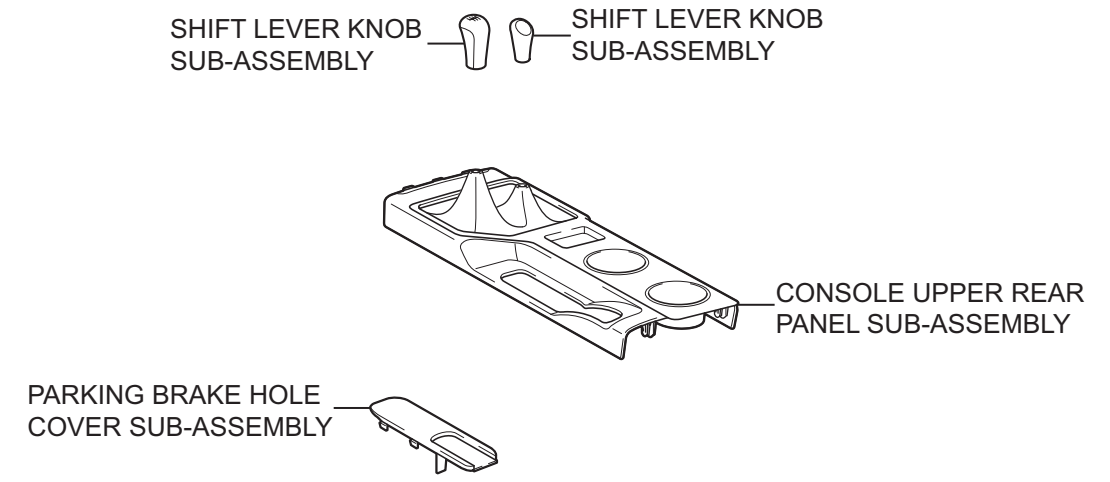

P

C133108E01

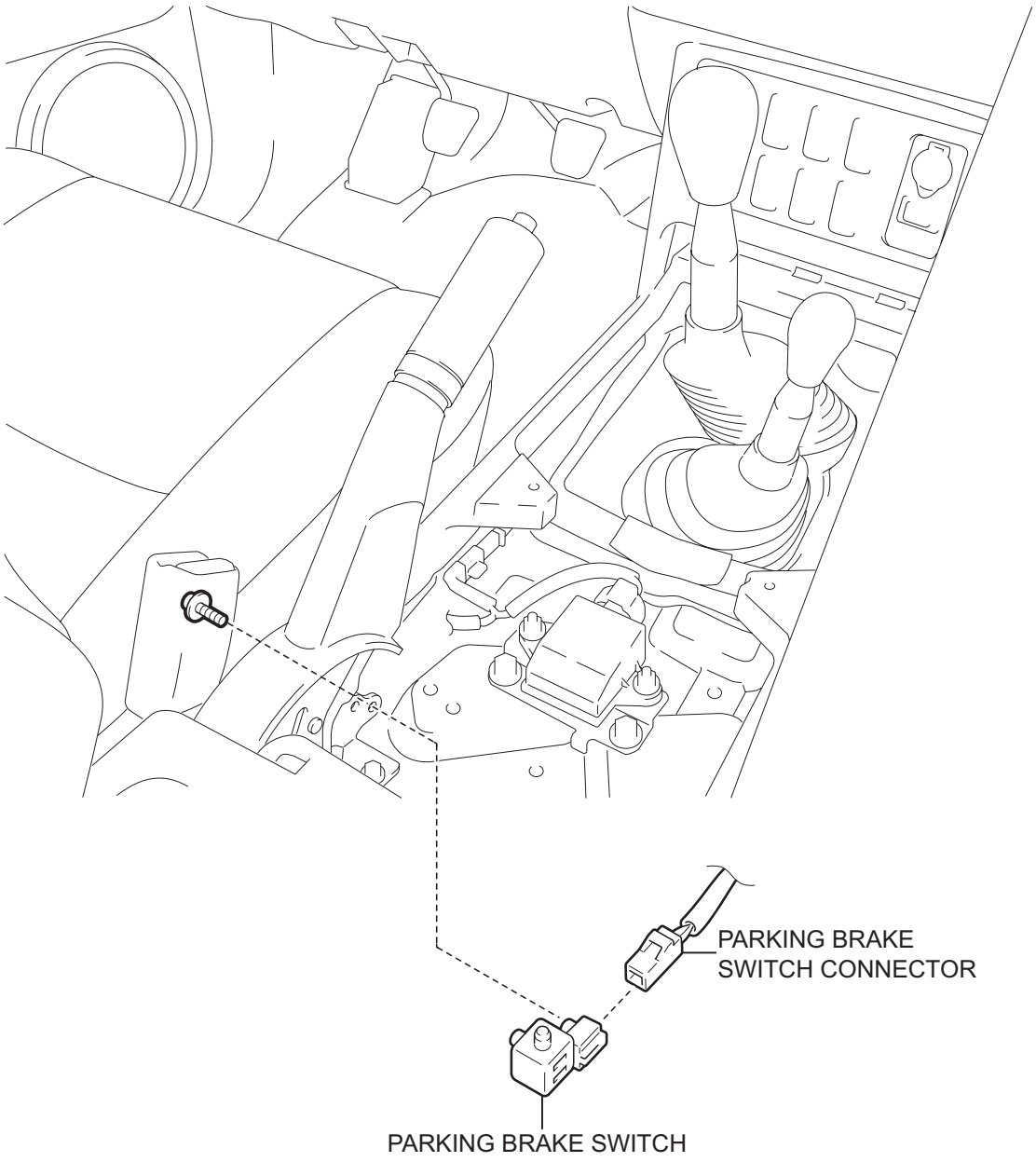

P

C133099E01

PB

REMOVAL

1. **DISCONNECT CABLE FROM NEGATIVE BATTERY TERMINAL**
2. **REMOVE PARKING BRAKE HOLE COVER SUB-ASSEMBLY (See page IP-11)**
3. **REMOVE SHIFT LEVER KNOB SUB-ASSEMBLY (for Manual Transmission) (See page IP-11)**
4. **REMOVE SHIFT LEVER KNOB SUB-ASSEMBLY (for 4WD) (See page IP-11)**
5. **REMOVE CONSOLE UPPER REAR PANEL SUB-ASSEMBLY (See page IP-12)**
6. **REMOVE PARKING BRAKE SWITCH**
   (a) Disconnect the parking brake switch connector.
   (b) Remove the screw and parking brake switch.

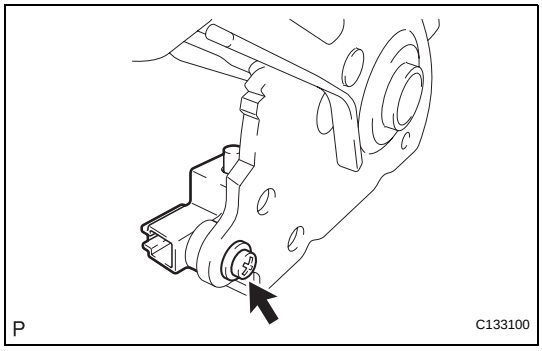

INSPECTION

1. INSPECT PARKING BRAKE SWITCH

(a) Check the resistance.

(1) Using an ohmmeter, measure the resistance between the terminals.

Standard resistance

Tester Connection	Switch Condition	Specified Condition
1 - Ground	Released	Below 1 Ω
1 - Ground	Pushed in	10 kΩ or higher

If the result is not as specified, replace the parking brake switch.

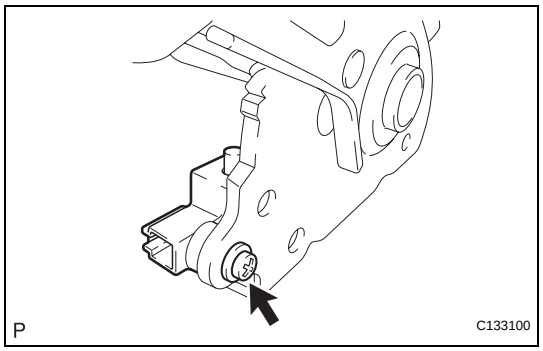

INSTALLATION

1. INSTALL PARKING BRAKE SWITCH

(a) Install the parking brake switch with the screw.

(b) Connect the parking brake switch connector.

2. INSTALL CONSOLE UPPER REAR PANEL SUB-ASSEMBLY (See page IP-31)

3. INSTALL SHIFT LEVER KNOB SUB-ASSEMBLY (for 4WD) (See page IP-32)

4. INSTALL SHIFT LEVER KNOB SUB-ASSEMBLY (for Manual Transmission) (See page IP-32)

5. INSTALL PARKING BRAKE HOLE COVER SUB-ASSEMBLY (See page IP-32)

6. CONNECT CABLE TO NEGATIVE BATTERY TERMINAL
Torque: 3.9 N*m (40 kgf*cm, 35 in.*lbf)

POWER STEERING SYSTEM

PRECAUTION

1. HANDLING PRECAUTIONS FOR STEERING SYSTEM

(a) Care must be taken when replacing parts. Incorrect replacement could affect the performance of the steering system and result in driving hazards.

2. HANDLING PRECAUTIONS FOR SRS AIRBAG SYSTEM

(a) The vehicle is equipped with SRS (Supplemental Restraint System), such as airbags. If service operation is not carried out properly in the correct sequence, the airbag may suddenly deploy and this may result in serious injury. Before servicing (including inspection, replacement, removal and inspection of parts), be sure to read the precautionary notices for the supplemental restraint system (See page RS-1).

PROBLEM SYMPTOMS TABLE

Symptom	Suspected area	See page
Hard steering	Tires (Improperly inflated)	TW-1
	Power steering fluid level (Low)	PS-3
	Drive belt (Loose)	PS-2
	Front wheel alignment (Incorrect) (2WD)	TW-1
	Front wheel alignment (Incorrect) (4WD)	TW-1
	Steering system joints (Worn)	-
	Suspension arm ball joints (Worn) (2WD)	SP-22
	Suspension arm ball joints (Worn) (4WD)	SP-22
	Steering column (Binding)	-
	Vane pump	PS-10
	Power steering link (2WD)	PS-18
	Power steering link (4WD)	PS-23
Poor return	Tires (Improperly inflated)	TW-1
	Front wheel alignment (Incorrect) (2WD)	TW-1
	Front wheel alignment (Incorrect) (4WD)	SP-2
	Steering column (Binding)	-
	Power steering link (2WD)	PS-18
	Power steering link (4WD)	PS-23
Excessive play	Steering system joints (Worn)	-
	Suspension arm ball joints (Worn) (2WD)	SP-22
	Suspension arm ball joints (Worn) (4WD)	SP-22
	Intermediate shaft, Sliding yoke (Worn)	-
	Front wheel bearing (Worn)	-
	Power steering link (2WD)	PS-18
	Power steering link (4WD)	PS-23
Abnormal noise	Power steering fluid level (Low)	PS-3
	Steering system joints (Worn)	-
	Vane pump	PS-10
	Power steering link (2WD)	PS-18
	Power steering link (4WD)	PS-23

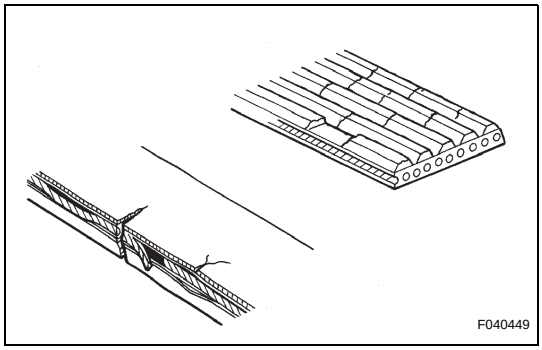

ON-VEHICLE INSPECTION

1. INSPECT DRIVE BELT

(a) Visually check the belt for defects, such as excessive wear and frayed cords.
If any defects are found, replace the drive belt.
HINT:
Cracks on the rib side of a belt are considered acceptable. Replace the belt if there are any missing ribs.

2. BLEED POWER STEERING SYSTEM

(a) Check the fluid level.
(b) Jack up the front of the vehicle and support it with stands.
(c) Turn the steering wheel.
  (1) With the engine stopped, turn the wheel slowly from lock to lock several times.
(d) Lower the vehicle.

(e) Start the engine.
  (1) Run the engine at idle for a few minutes.
(f) Turn the steering wheel.
  (1) With the engine idling, turn the wheel to the left or right full lock position and keep it there for 2 to 3 seconds. Then turn the wheel to the opposite full lock position and keep it there for 2 to 3 seconds (step A).
  (2) Repeat step A several times.
(g) Stop the engine.

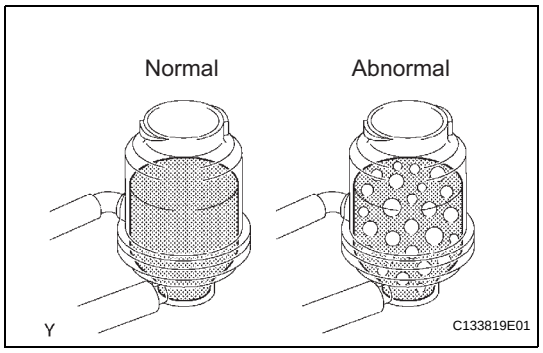

(h) Check for foaming or emulsification.
Especially, if the system has to be bled twice because of foaming or emulsification, check for fluid leakage in the system.
(i) Check the fluid level.

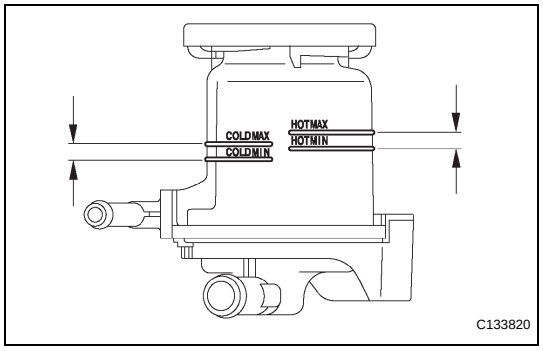

3. INSPECT FLUID LEVEL

(a) Keep the vehicle level.
(b) With the engine stopped, check the fluid level in the oil reservoir.
If necessary, add fluid.
Fluid:
ATF "DEXRON" II or III
HINT:
Check that the fluid level is within the HOT level range in the reservoir tank. If the fluid is cold, check that it is within the COLD level range.
(c) Start the engine and let it idle.
(d) Turn the steering wheel from lock to lock several times to raise fluid temperature.
Fluid temperature:
75 to 80°C (167 to 176°F)

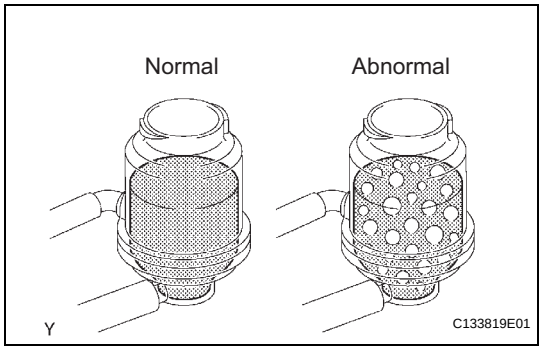

(e) Check for foaming or emulsification.
If any foaming or emulsification is identified, bleed the power steering system.

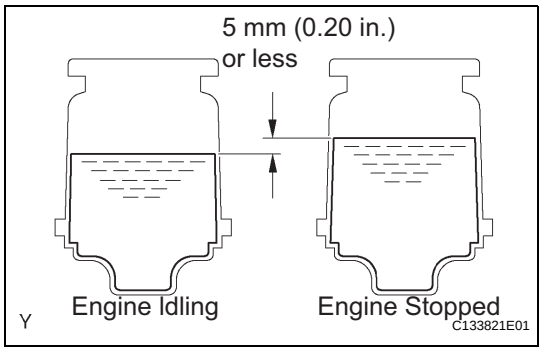

(f) With the engine idling, measure the fluid level in the oil reservoir.
(g) Stop the engine.
(h) Wait a few minutes and measure the fluid level in the oil reservoir again.
Maximum fluid level rise:
5 mm (0.20 in.)
If any problems are found, bleed the power steering system again.
(i) Check the fluid level.

4. INSPECT STEERING FLUID PRESSURE

(a) Disconnect the pressure feed tube from the vane pump (See page PS-8).
(b) Connect SST as shown in the illustration.
SST 09640-10010 (09641-01010, 09641-01030, 09641-01060)
NOTICE:
Check that the valve of SST is in the open position.
(c) Bleed the power steering system.
(d) Start the engine and let it idle.
(e) Turn the steering wheel from lock to lock several times to raise the fluid temperature.
Fluid temperature:
75 to 80 °C (167 to 176 °F)

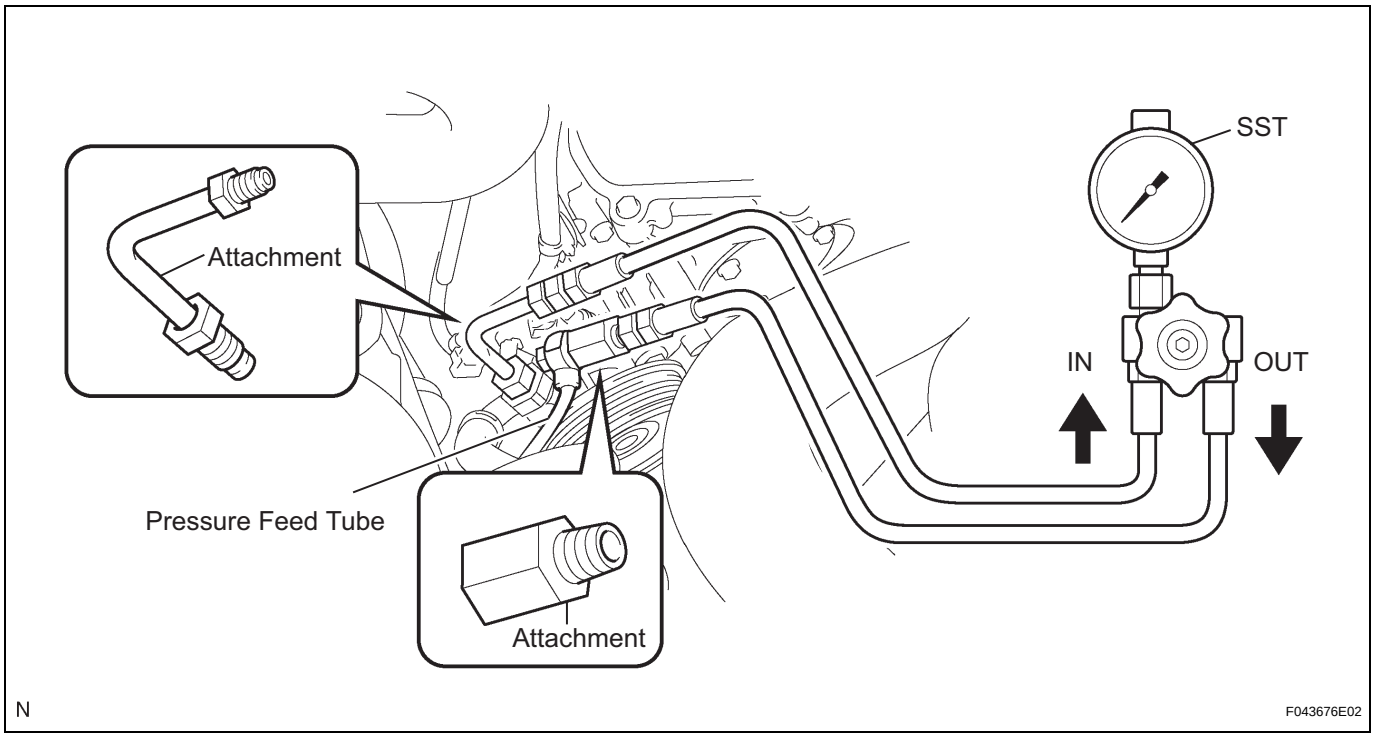

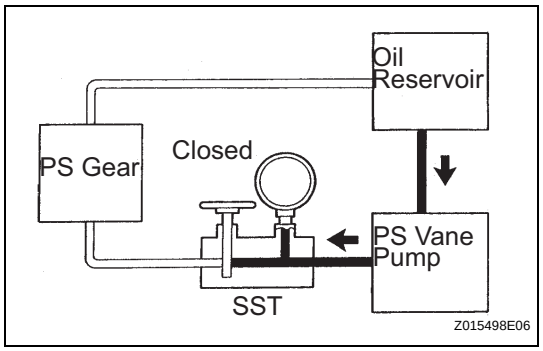

(f) With the engine idling, close the valve of SST and check the reading on SST.
Fluid pressure:
8,300 to 8,800 kPa (85 to 90 kgf/cm^2, 1,209 to 1,280 psi)
NOTICE:
- **Do not keep the valve closed for more than 10 seconds.**
- **Do not let the fluid temperature become too high.**

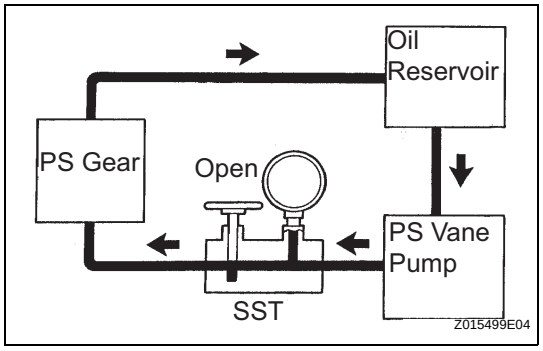

(g) With the engine idling, fully open the valve.
(h) Measure the fluid pressure at the engine speeds of 1,000 rpm and 3,000 rpm.
Fluid pressure difference:
490 kPa (5 kgf/cm^2, 71 psi) or less
NOTICE:
Do not turn the steering wheel.

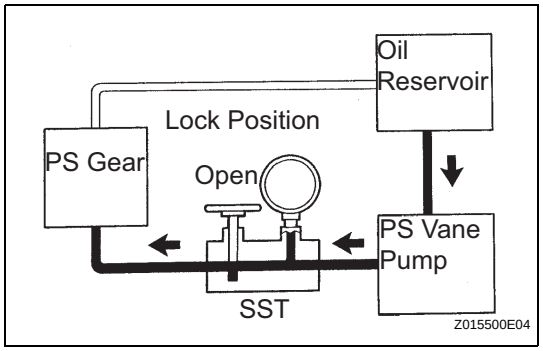

(i) With the engine idling and valve fully open, turn the steering wheel to the full lock position.
Fluid pressure:
8,300 to 8,800 kPa (85 to 90 kgf/cm^2, 1,209 to 1,280 psi)
NOTICE:
- **Do not keep the steering wheel in the full lock position for more than 10 seconds.**
- **Do not let the fluid temperature become too high.**

(j) Disconnect SST.
(k) Connect the pressure feed tube to the vane pump (See page PS-14).
(l) Bleed the power steering system.

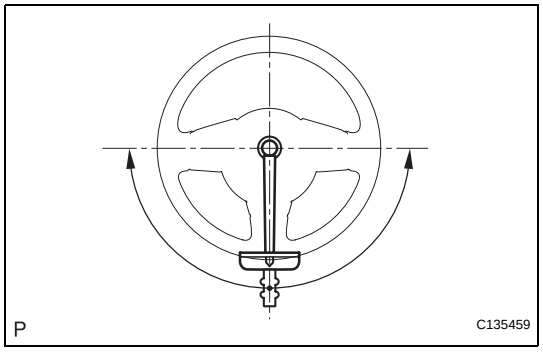

5. INSPECT STEERING EFFORT
(a) Center the steering wheel assembly.
(b) Remove the steering pad (See page RS-345).
(c) Start the engine and let it idle.
(d) Measure the steering effort in both directions.
Steering effort (Reference):
6.0 N*m (60 kgf*cm, 53 in.*lbf) or less
HINT:
Check the tire type, pressure and contact surfaces before making a diagnosis.
(e) Install the steering wheel assembly set nut.
Torque: 50 N*m (510 kgf*cm, 37 ft.*lbf)
(f) Install the steering pad (RS-346).

PS

VANE PUMP

COMPONENTS

PS

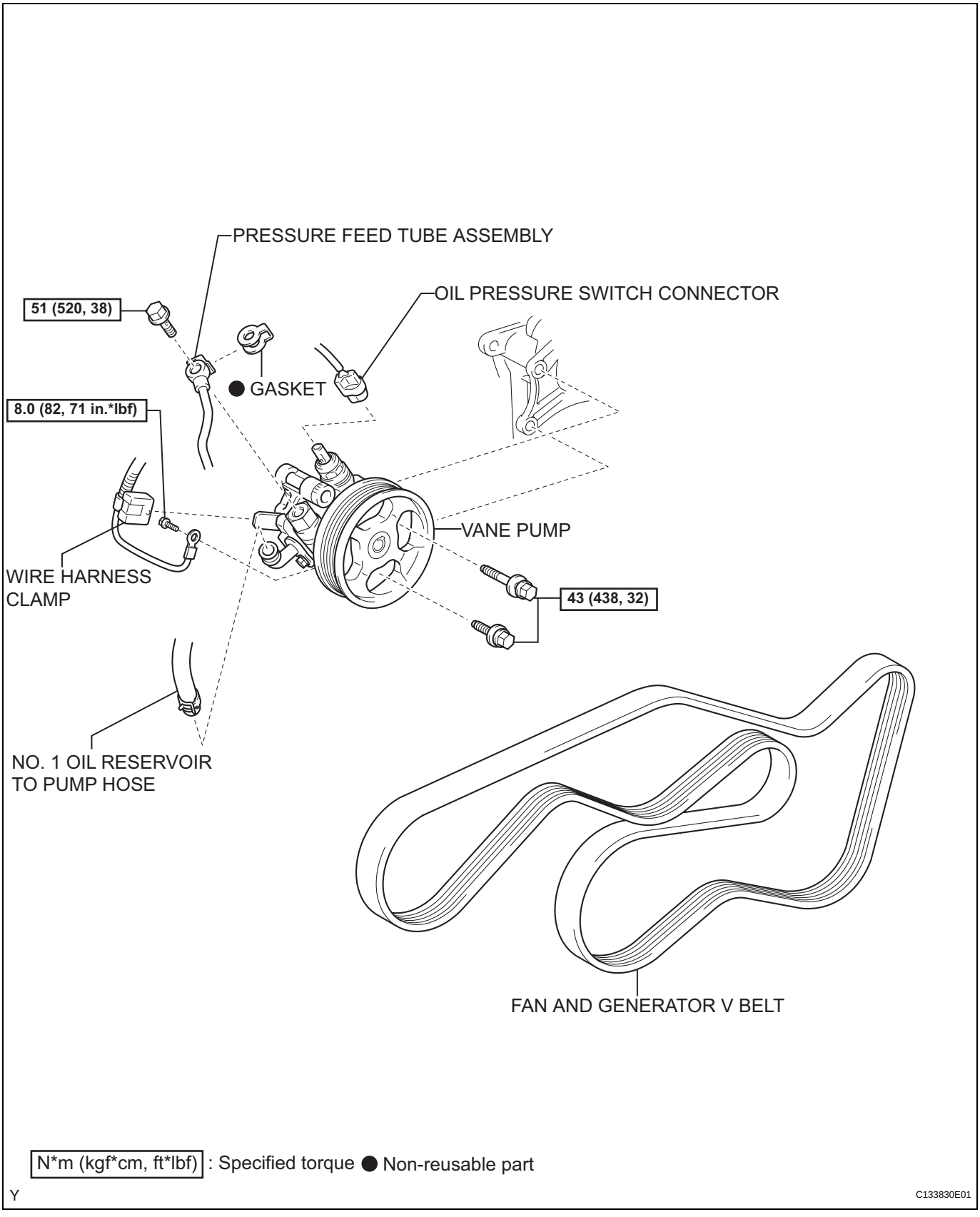

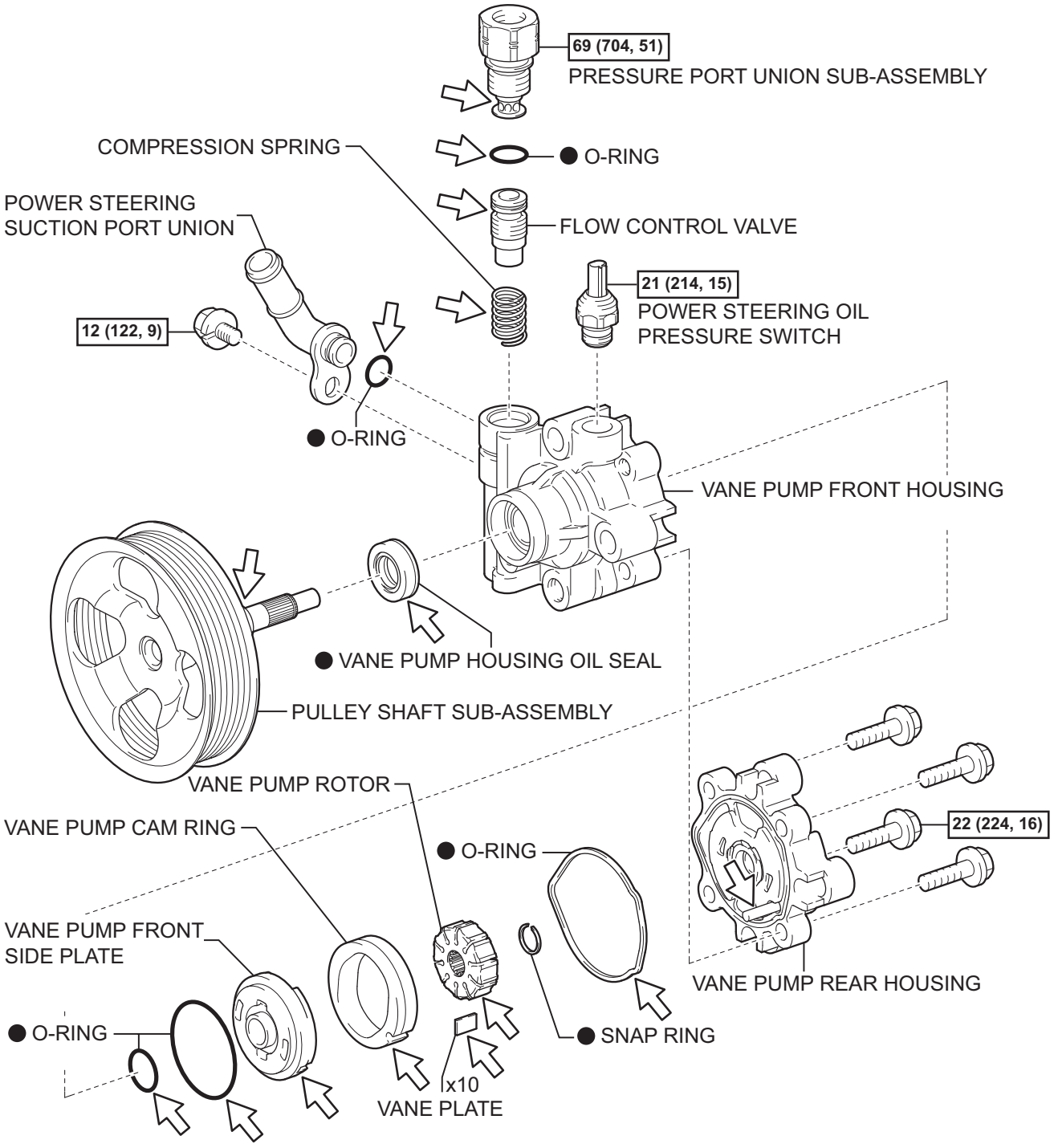

N*m (kgf*cm, ft*lbf) : Specified torque

● Non-reusable part ⇦ Power steering fluid

P

C114127E02

PS

REMOVAL

1. **DISCONNECT CABLE FROM NEGATIVE BATTERY TERMINAL**
2. **REMOVE NO. 1 ENGINE UNDER COVER SUB-ASSEMBLY (See page EM-6)**
3. **REMOVE FAN AND GENERATOR V BELT (See page EM-6)**
4. **DRAIN POWER STEERING FLUID**
5. **DISCONNECT NO. 1 OIL RESERVOIR TO PUMP HOSE**
   (a) Disengage the clip and disconnect the No. 1 oil reservoir to pump hose.

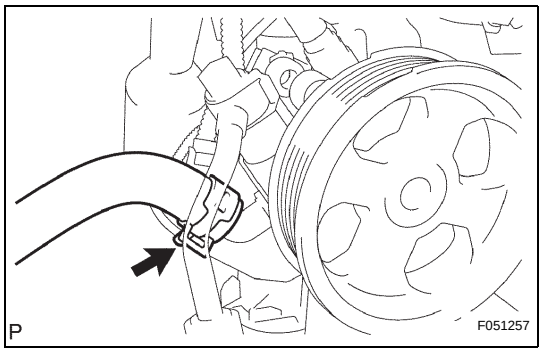

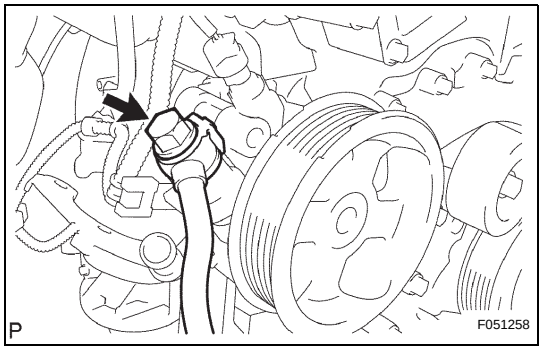

6. **DISCONNECT PRESSURE FEED TUBE ASSEMBLY**
   (a) Remove the union bolt, then disconnect the pressure feed tube.
   (b) Remove the gasket from the pressure feed tube.

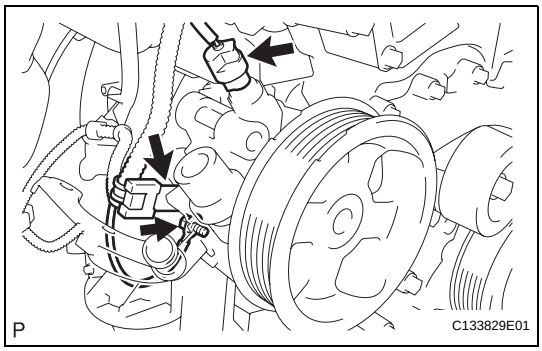

7. **REMOVE VANE PUMP**
   (a) Disconnect the oil pressure switch connector.
   (b) Remove the bolt and the wire harness clamp bracket.

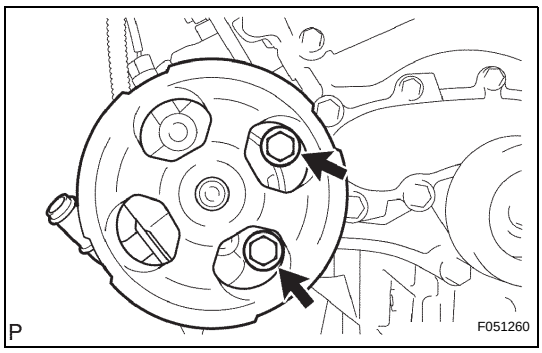

   (c) Remove the 2 bolts and the vane pump assembly.

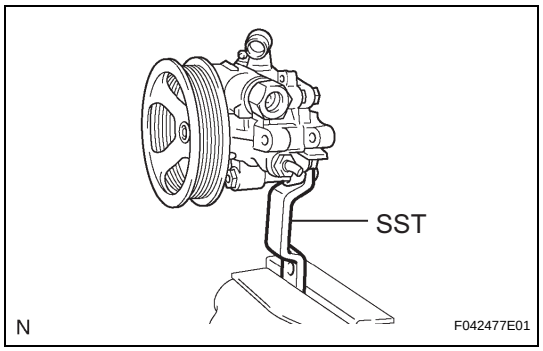

DISASSEMBLY

1. FIX VANE PUMP

(a) Using SST, fix the vane pump assembly in a vise.
SST 09630-00014 (09631-00132)
NOTICE:
Do not over tighten the vise.

2. REMOVE POWER STEERING SUCTION PORT UNION

(a) Remove the bolt and suction port union.
(b) Remove the O-ring from the suction port union.

3. REMOVE FLOW CONTROL VALVE

(a) Remove the pressure port union.
(b) Remove the O-ring from the pressure port union.
(c) Remove the flow control valve and compression spring.

4. REMOVE POWER STEERING OIL PRESSURE SWITCH
NOTICE:
Be careful not to drop or badly damage the oil pressure switch. If damaged, replace it with a new one.

5. REMOVE VANE PUMP REAR HOUSING

(a) Remove the 4 bolts and vane pump housing rear from the vane pump housing front.
(b) Remove the O-ring from the vane pump housing front.

6. REMOVE PULLEY SHAFT SUB-ASSEMBLY
NOTICE:
Be careful not to drop or badly damage the pulley shaft. If damaged, replace it with a new one.

(a) Using a screwdriver, remove the snap ring from the pulley shaft.
(b) Remove the pulley shaft.

7. REMOVE VANE PUMP ROTOR

(a) Remove the 10 vane plates.
(b) Remove the vane pump rotor.

8. REMOVE VANE PUMP CAM RING

9. REMOVE VANE PUMP FRONT SIDE PLATE

(a) Remove the side plate from the vane pump housing front.
(b) Remove the O-ring from the side plate.

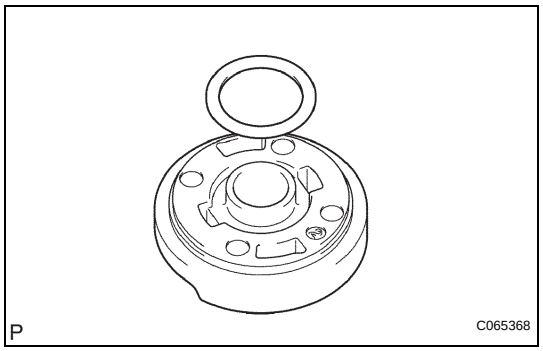

PS

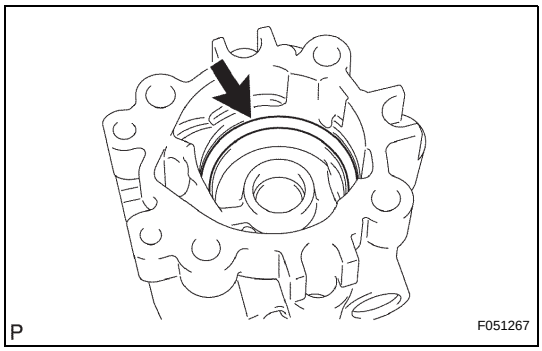

(c) Remove the O-ring from the vane pump housing front.

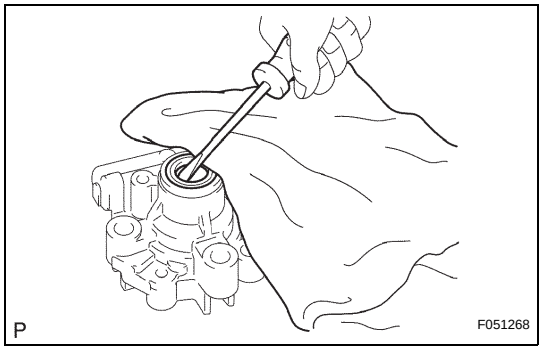

10. REMOVE VANE PUMP HOUSING OIL SEAL

(a) Using screwdriver, remove the oil seal.

NOTICE:
Be careful not to damage the vane pump housing front.

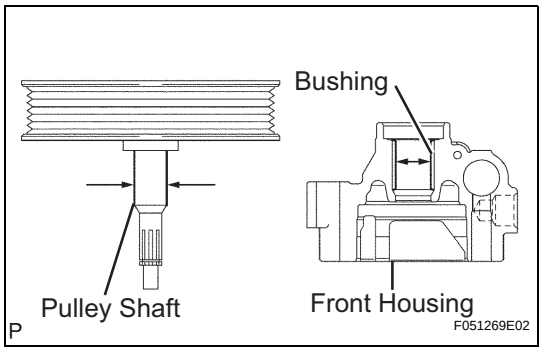

INSPECTION

1. INSPECT OIL CLEARANCE

(a) Using a micrometer and caliper gauge, measure the oil seal clearance.

Standard clearance:
0.021 to 0.043 mm (0.0008 to 0.0017 in.)
Maximum clearance:
0.07 mm (0.0028 in.)
If it is greater than the maximum, replace the vane pump assembly.

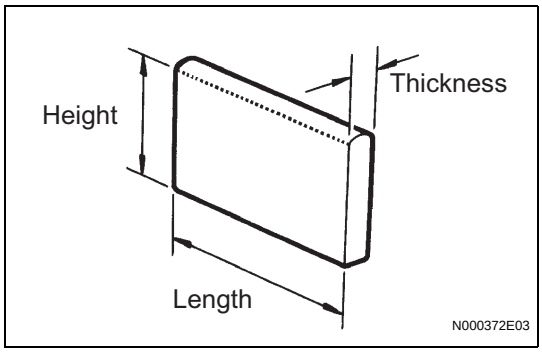

2. INSPECT VANE PUMP ROTOR AND VANE PUMP PLATE

(a) Using a micrometer, measure the height, thickness and length of the vane plates.

Minimum height:
7.6 mm (0.299 in.)
Minimum thickness:
1.405 mm (0.0553 in.)
Minimum length:
11.993 mm (0.4722 in.)

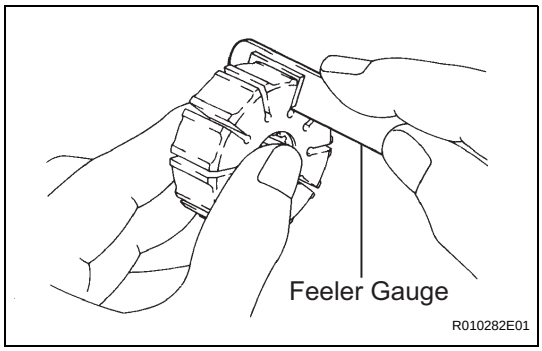

(b) Using a feeler gauge, measure the clearance between a side face of the vane pump rotor groove and vane plate.

Maximum clearance:
0.025 mm (0.0010 in.)
If it is greater than the maximum, replace the vane pump assembly.

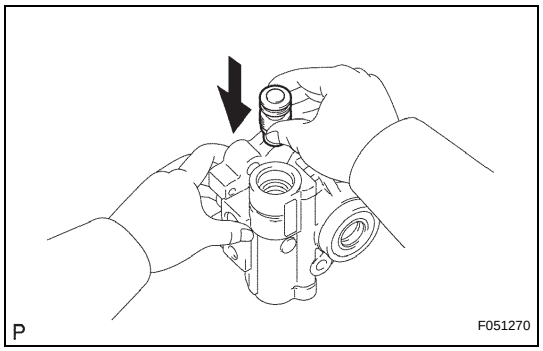

3. INSPECT FLOW CONTROL VALVE

(a) Coat the flow control valve with power steering fluid and check that it falls smoothly into the flow control valve hole under its own weight.

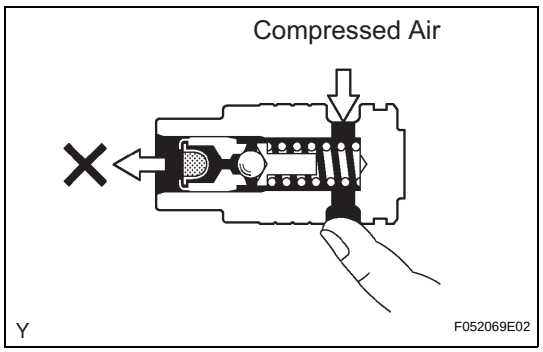

(b) Check the flow control valve for leakage. Close one of the holes and apply compressed air of 392 to 490 kPa (4 to 5 kgf/cm^2, 57 to 71 psi) to the hole on the opposite side. Confirm that the air does not flow out from the end holes.
If necessary, replace the vane pump assembly.

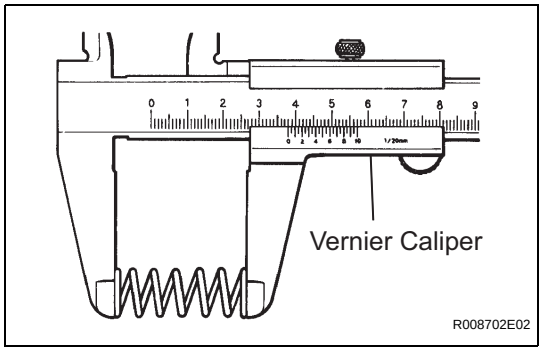

4. INSPECT COMPRESSION SPRING

(a) Using vernier calipers, measure the free length of the spring.
Minimum free length:
29.2 mm (1.150 in.)
If it is not within the specification, replace the vane pump assembly.

5. INSPECT PRESSURE PORT UNION SUB-ASSEMBLY

(a) If the union seat in the pressure port union is badly damaged, it could cause fluid leakage, so replace the vane pump assembly.

REASSEMBLY

NOTICE:
When installing, coat the parts indicated by the arrows with power steering fluid (See page PS-3).

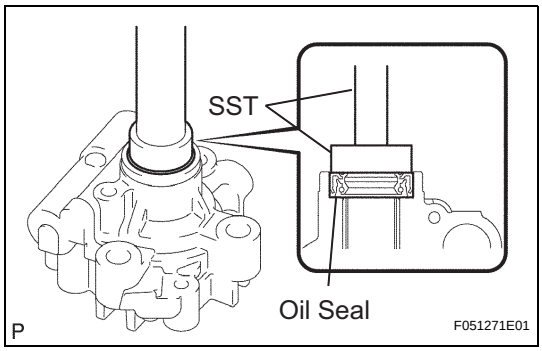

1. INSTALL VANE PUMP HOUSING OIL SEAL

(a) Coat a new vane pump housing oil seal lip with power steering fluid.

(b) Using SST and a press, install a new oil seal.

SST 09950-60010 (09951-00280), 09950-70010 (09951-07100)

NOTICE:
Make sure that the oil seal is installed facing in the correct direction.

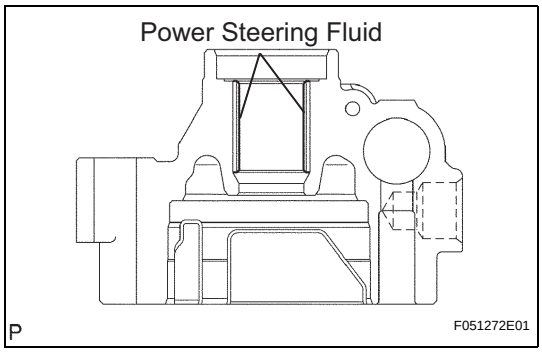

2. INSTALL PULLEY SHAFT SUB-ASSEMBLY

(a) Coat the bushing inner surface of the vane pump housing front with power steering fluid.

(b) Gradually insert the vane pump shaft.

NOTICE:
Do not damage the vane pump housing oil seal lip in the vane pump housing front.

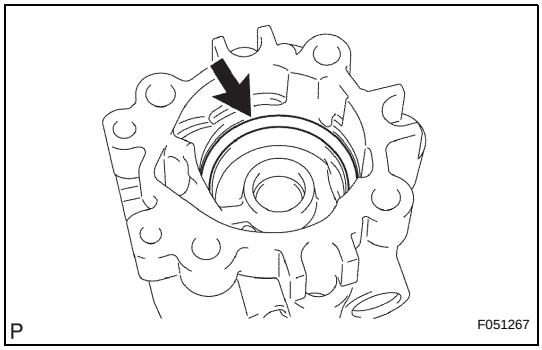

3. INSTALL VANE PUMP FRONT SIDE PLATE

(a) Coat a new O-ring with power steering fluid and install it onto the vane pump housing front.

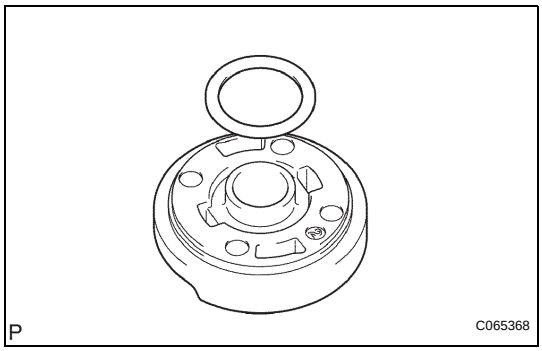

(b) Coat a new O-ring with power steering fluid and install it onto the side plate.

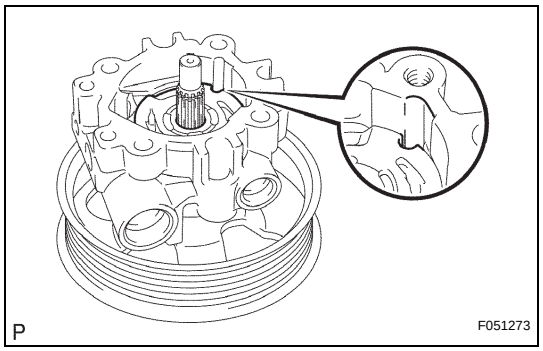

(c) Align the dent of the side plate with that of the vane pump housing front and install the side plate.
NOTICE:
Make sure that the side plate is installed facing the correct direction.

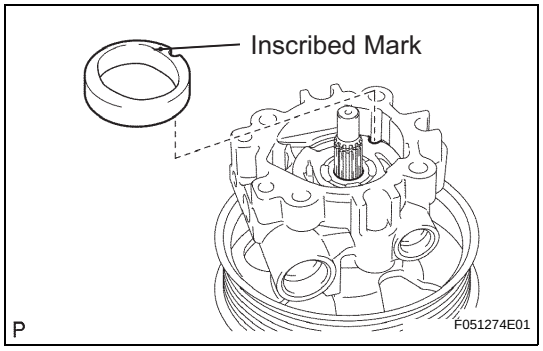

4. INSTALL VANE PUMP CAM RING

(a) Align the dent of the cam ring with that of the side plate and install the cam ring with the inscribed mark facing outward.

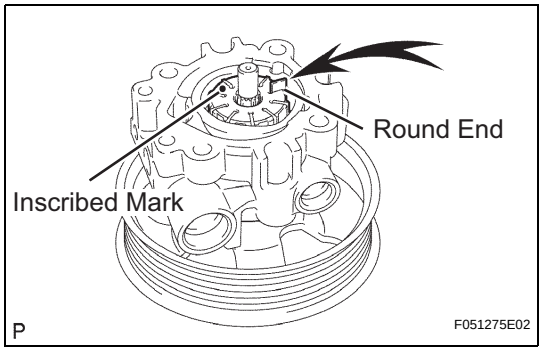

5. INSTALL VANE PUMP ROTOR

(a) Install the vane pump rotor with the inscribed mark facing outward.
(b) Coat the 10 vane plates with power steering fluid.
(c) Install the vane plates with the round ends facing outward.

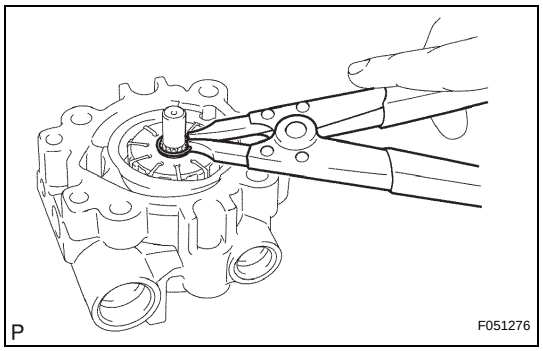

(d) Using a snap ring expander, install a new snap ring onto the pulley shaft.

6. INSTALL VANE PUMP REAR HOUSING

(a) Coat a new O-ring with power steering fluid and install it onto the vane pump housing rear.
(b) Align the straight pin of the vane pump housing rear with the dents of the cam ring, side plate and vane pump housing front, and install the vane pump housing rear with the 4 bolts.
Torque: 22 N*m (224 kgf*cm, 16 ft.*lbf)

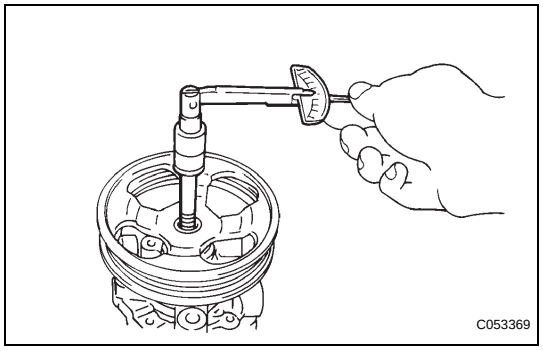

7. INSPECT PRELOAD

(a) Check that the pump rotates smoothly without making any abnormal noises.
(b) Provisionally install the service bolt.
Recommended service bolt:
Thread diameter:
10 mm (0.3937 in.)
Thread pitch:
1.25 mm (0.0492 in.)
Bolt length:
50 mm (1.9685 in.)

(c) Using a torque wrench, check the pump rotating torque.
Torque: 0.27 N*m (2.8 kgf*cm, 2.4 in.*lbf)

8. INSTALL POWER STEERING OIL PRESSURE SWITCH

(a) Coat the O-ring with power steering fluid and install it onto the power steering oil pressure switch.
(b) Install the power steering oil pressure switch onto the vane pump.
Torque: 21 N*m (214 kgf*cm, 15 ft.*lbf)

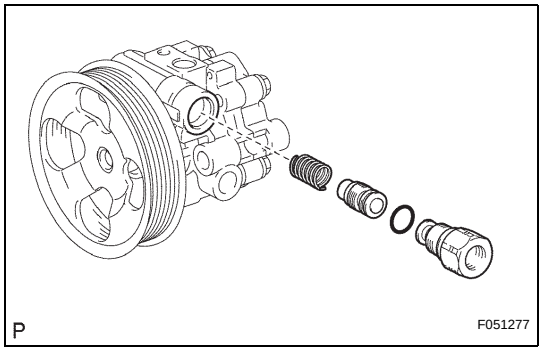

9. INSTALL FLOW CONTROL VALVE

(a) Coat the compression spring and flow control valve with power steering fluid.
(b) Install the compression spring and flow control valve.
(c) Coat a new O-ring with power steering fluid and install it onto the pressure port union.
(d) Install the pressure port union.
Torque: 69 N*m (704 kgf*cm, 51 ft.*lbf)

10. INSTALL POWER STEERING SUCTION PORT UNION

(a) Coat a new O-ring with power steering fluid, and install it onto the suction port union.
(b) Install the suction port union with the bolt.
Torque: 12 N*m (122 kgf*cm, 9 ft.*lbf)

INSTALLATION

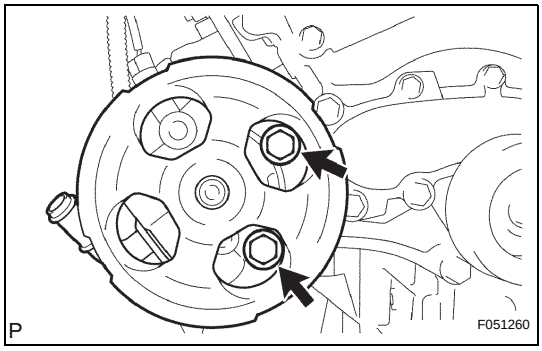

1. INSTALL VANE PUMP

(a) Install the vane pump assembly with the 2 bolts.
Torque: 43 N*m (438 kgf*cm, 32 ft.*lbf)

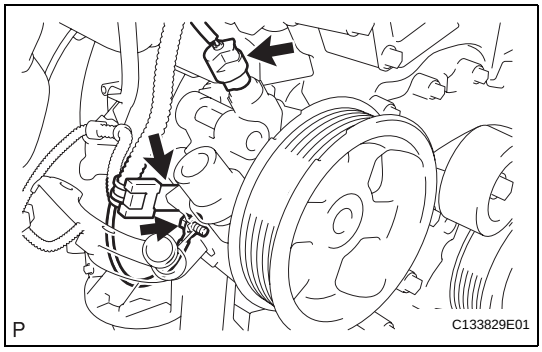

(b) Install the wire harness clamp bracket with the bolt.
Torque: 8.0 N*m (82 kgf*cm, 71 in.*lbf)
(c) Connect the oil pressure switch connector.
NOTICE:
Make sure that no oil adheres to the connector.

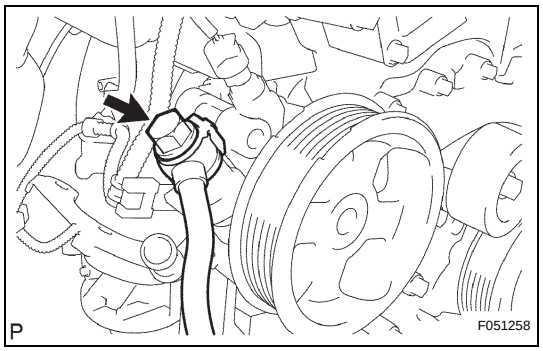

2. **CONNECT PRESSURE FEED TUBE ASSEMBLY**
   (a) Install a new gasket onto the pressure feed tube.
   (b) Install the pressure feed tube with the union bolt.
   Torque: 51 N*m (520 kgf*cm, 38 ft.*lbf)

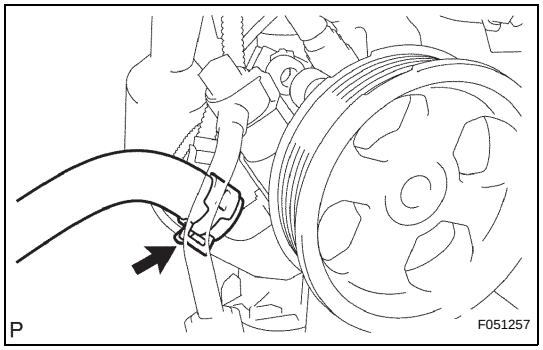

3. **CONNECT NO. 1 OIL RESERVOIR TO PUMP HOSE**
   (a) Connect the No. 1 oil reservoir to pump hose with the clip.

4. **INSTALL FAN AND GENERATOR V BELT (See page EM-6)**

5. **CONNECT CABLE TO NEGATIVE BATTERY TERMINAL**
   Torque: 3.9 N*m (40 kgf*cm, 35 in.*lbf)

6. **ADD POWER STEERING FLUID**

7. **BLEED POWER STEERING FLUID (See page PS-2)**

8. **CHECK FOR POWER STEERING FLUID LEAKAGE**

9. **INSTALL NO. 1 ENGINE UNDER COVER SUB-ASSEMBLY (See page EM-7)**

PS

POWER STEERING LINK (for 2WD)

COMPONENTS

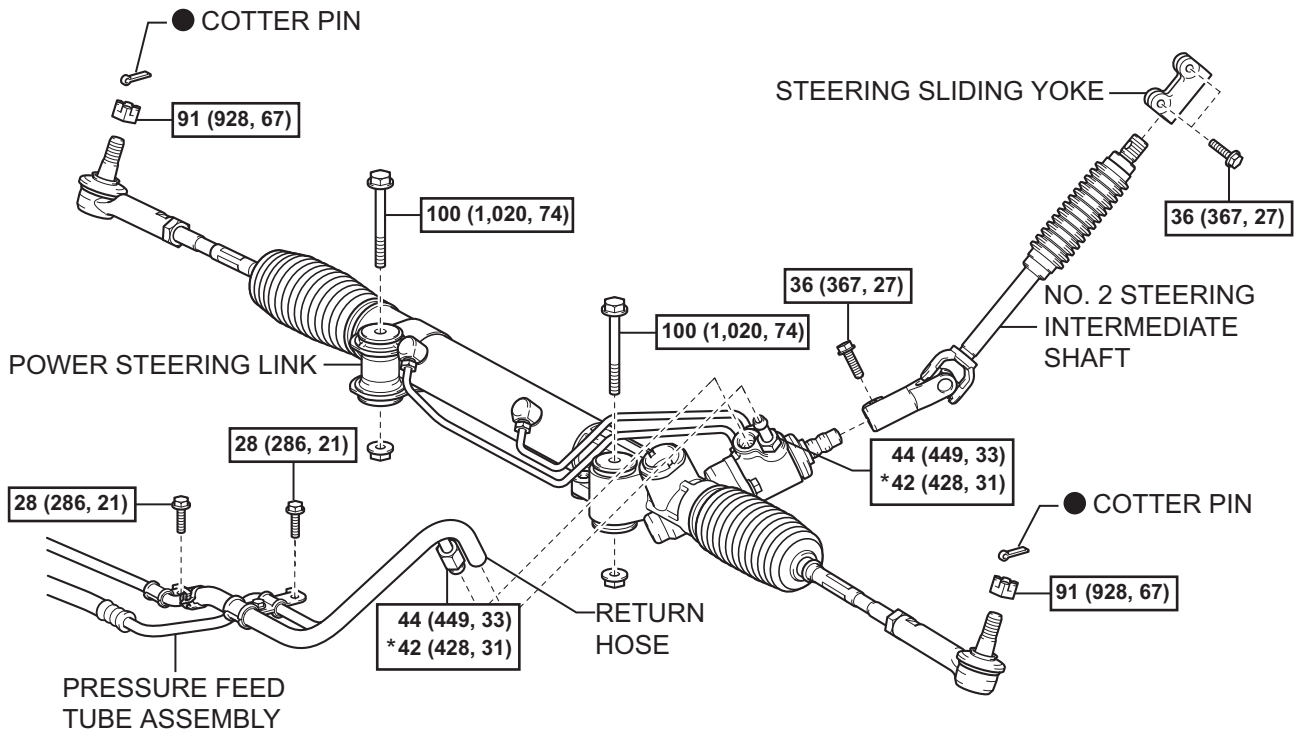

N*m (kgf*cm, ft*lbf) : Specified torque ● Non-reusable part * For use with SST

P

C133818E01

PS

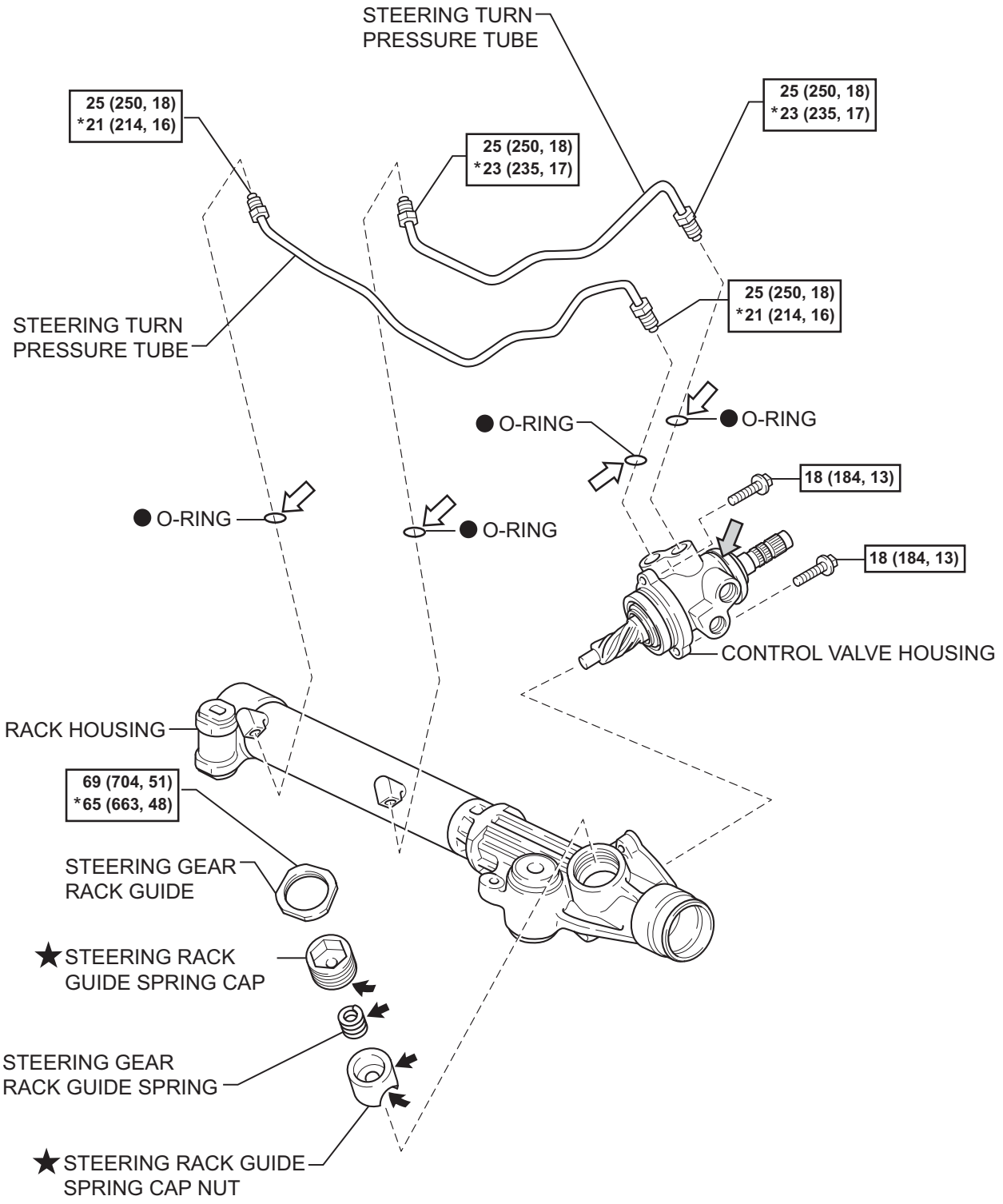

N*m (kgf*cm, ft*lbf) : Specified torque

● Non-reusable part

★ Precoated part

Molybdenum disulfide lithium base grease * For use with SST

Power steering fluid

MP grease

N

C137989E01

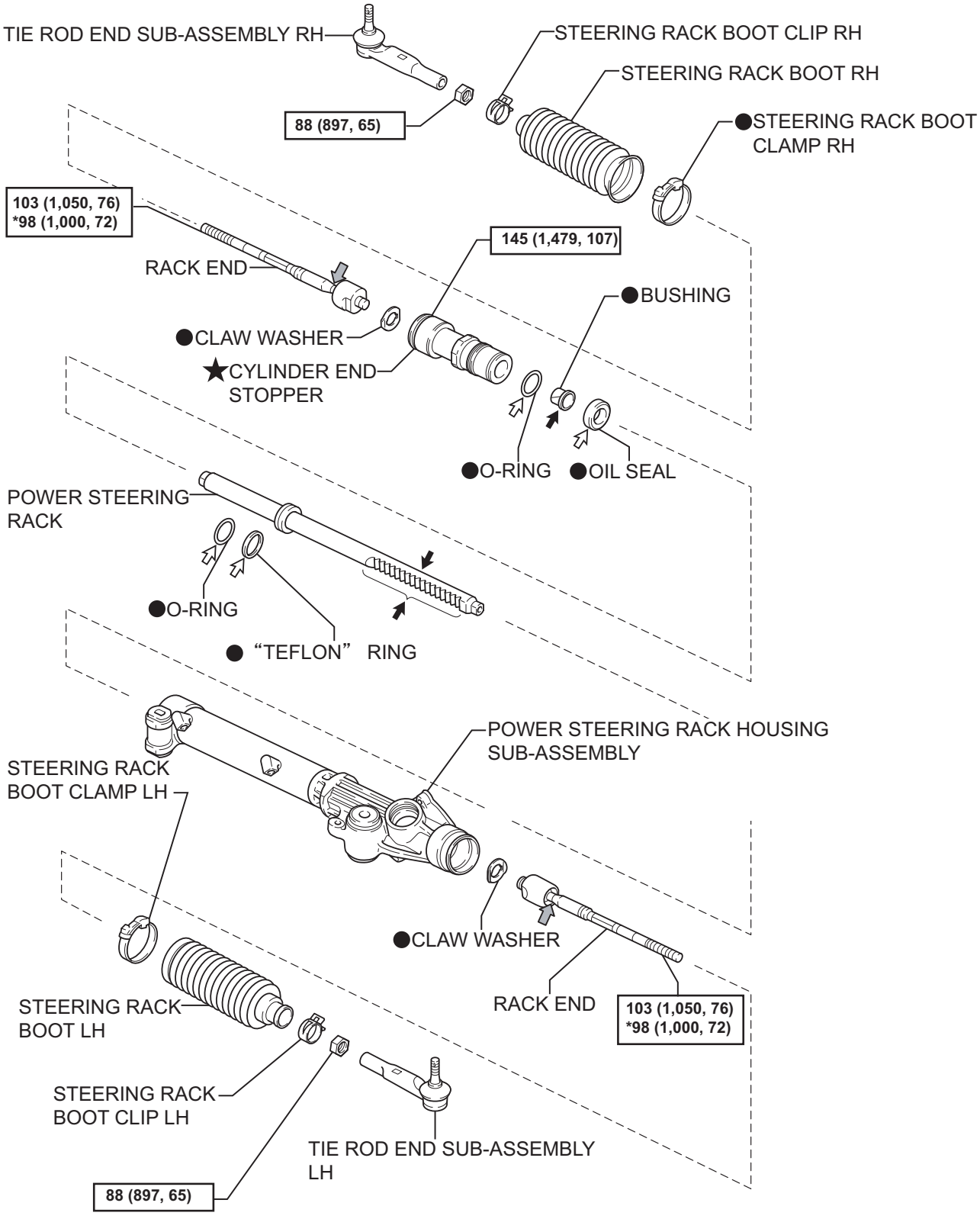

N*m (kgf*cm, ft.*lbf) ; Specified torque

●Non-reusable part

★ Liquid sealant

⬅ Molybdenum disulfide lithium base grease

⇦ Power steering fluid ⇦ MP grease

* For use with SST

N

C137988E01

PS

PS

REMOVAL

1. **DISCONNECT CABLE FROM NEGATIVE BATTERY TERMINAL**
2. **PLACE FRONT WHEELS FACING STRAIGHT AHEAD**
3. **REMOVE NO.1 ENGINE UNDER COVER SUB-ASSEMBLY (See page EM-6)**
4. **REMOVE FAN AND GENERATOR V BELT (See page EM-6)**
5. **REMOVE FRONT WHEELS**
6. **REMOVE NO.2 STEERING INTERMEDIATE SHAFT SUB-ASSEMBLY**
   (a) Fix the steering wheel with the seat belt in order to prevent it from rotating.
   HINT:
   The operation is effective for preventing any damage to the spiral cable.

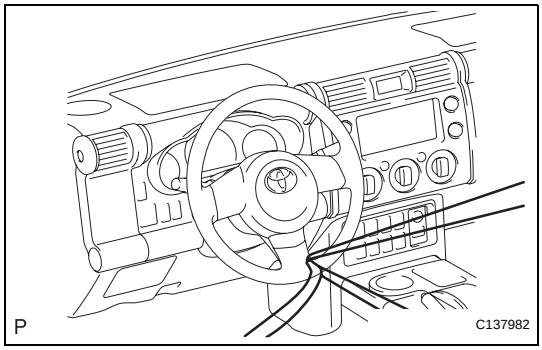

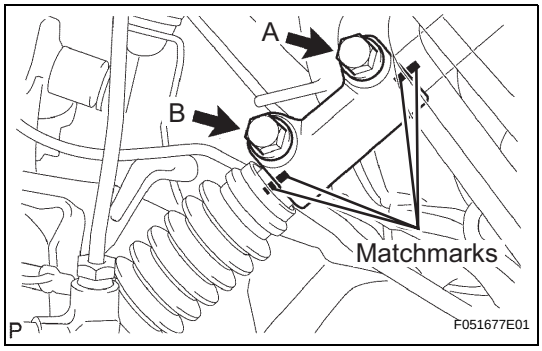

   (b) Place matchmarks on the steering sliding yoke, No. 2 steering intermediate shaft and steering intermediate shaft.
   (c) Remove bolts A and B from the steering sliding yoke.
   (d) Slide the steering sliding yoke up and separate it from the No. 2 steering intermediate shaft.
   (e) Pull down the steering sliding yoke from the steering intermediate shaft to remove it.

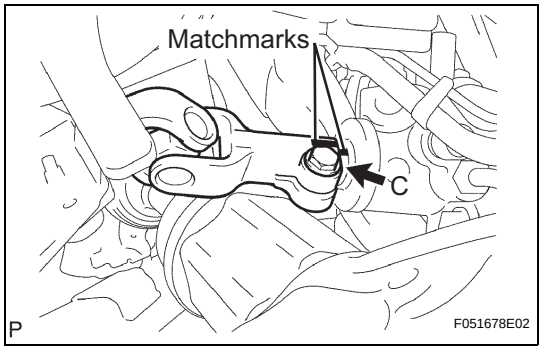

   (f) Place matchmarks on the No. 2 steering intermediate shaft and power steering link.
   (g) Remove bolt C from the No. 2 steering intermediate shaft.
   (h) Slide the No. 2 steering intermediate shaft up and remove it from the power steering link.
7. **SEPARATE TIE ROD END SUB-ASSEMBLY LH**
   (a) Remove the cotter pin and nut.

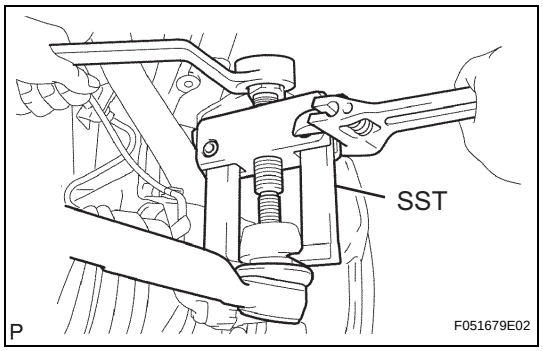

(b) Using SST, separate the tie rod end from the steering knuckle arm.
SST 09628-62011

8. SEPARATE TIE ROD END SUB-ASSEMBLY RH
HINT:
The removal procedure for the RH side is the same as that for the LH side.

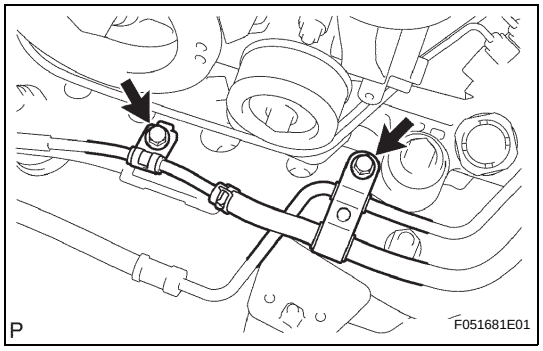

9. SEPARATE PRESSURE FEED TUBE ASSEMBLY
(a) Remove the 2 bolts and separate the tube support brackets.

PS

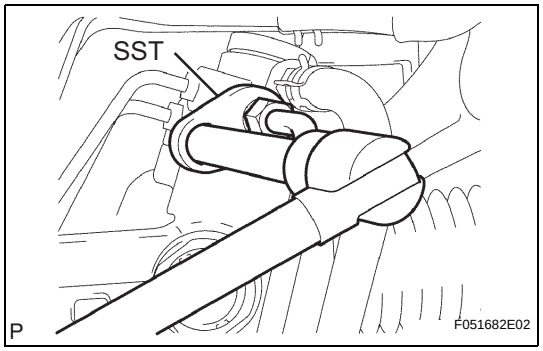

(b) Using SST, loosen the flare nut and separate the pressure feed tube.
SST 09023-12701

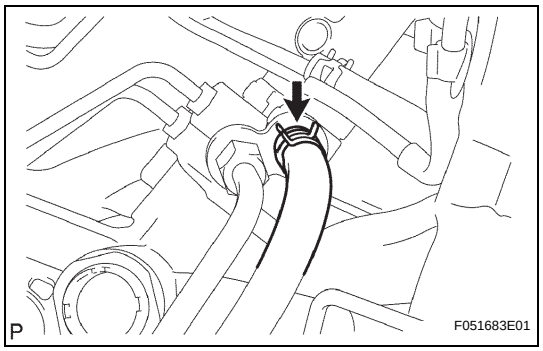

(c) Disengage the clip and disconnect the return hose.

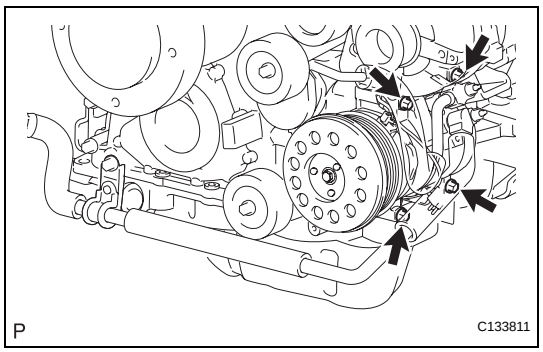

10. SEPARATE COOLER COMPRESSOR ASSEMBLY
(a) Remove the 4 bolts and remove the cooler compressor and magnetic clutch.

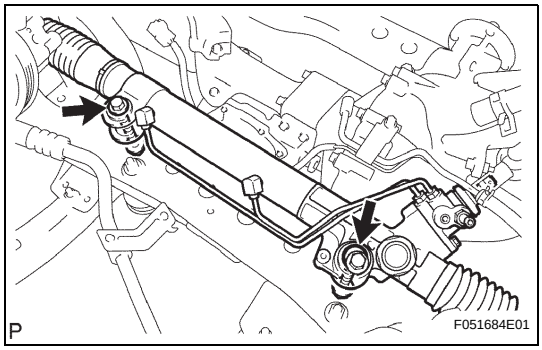

11. REMOVE POWER STEERING LINK

(a) Remove the 2 bolts and 2 nuts.
NOTICE:
The nut has a detent, so never turn the nut. Be sure to turn only the bolt.

(b) Tilt the transmission and remove the power steering link.

DISASSEMBLY

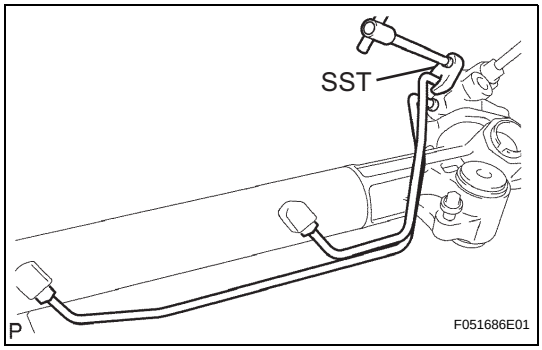

1. FIX POWER STEERING LINK

(a) Using SST, remove the 2 turn pressure tubes.
SST 09023-38201

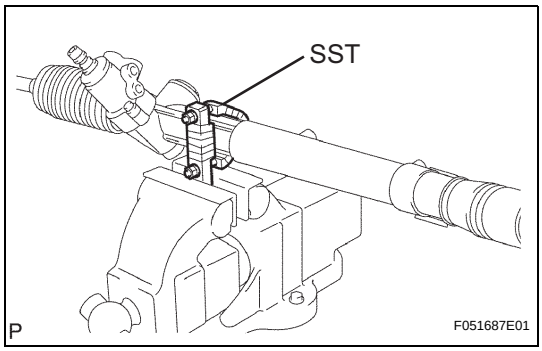

(b) Using SST, fix the steering link between aluminum plates in a vise, as shown in the illustration.
SST 09612-00012

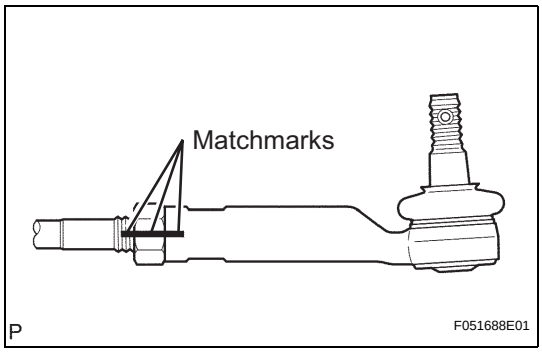

2. REMOVE TIE ROD END SUB-ASSEMBLY LH

(a) Place matchmarks on the tie rod end, lock nut and rack end.

(b) Loosen the lock nut and remove the tie rod end and lock nut.

3. REMOVE TIE ROD END SUB-ASSEMBLY RH

HINT:
Use the same procedures described for the LH side.

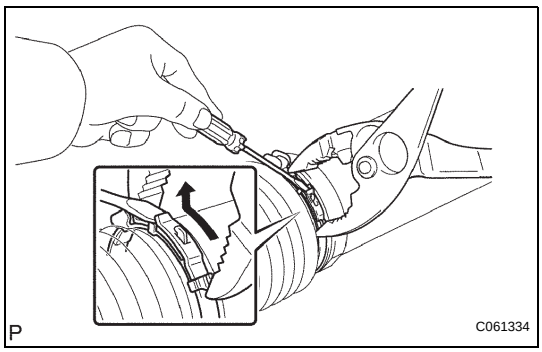

4. REMOVE STEERING RACK BOOT CLAMP LH

(a) Using pliers and a screwdriver, loosen the clamp.
HINT:
Mark the RH and LH boots.
NOTICE:
Be careful not to damage the boot.

5. REMOVE STEERING RACK BOOT CLAMP RH

HINT:
Use the same procedures described for the LH side.

6. REMOVE STEERING RACK BOOT CLIP LH

(a) Using pliers, remove the clip.

NOTICE:
Be careful not to damage the boot.

7. REMOVE STEERING RACK BOOT CLIP RH

HINT:
Use the same procedures described for the LH side.

8. REMOVE STEERING RACK BOOT LH

9. REMOVE STEERING RACK BOOT RH

10. REMOVE STEERING RACK END SUB-ASSEMBLY

(a) Using a screwdriver and hammer, stake back the 2 washers (LH and RH sides).

NOTICE:
Do not strike the steering rack.

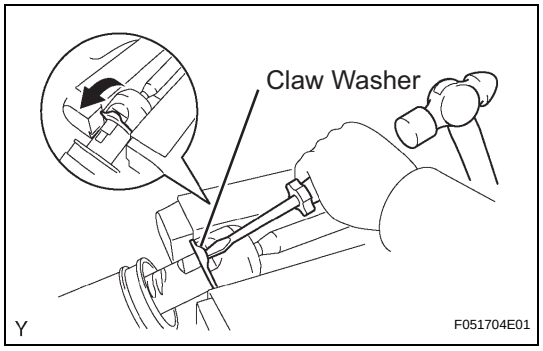

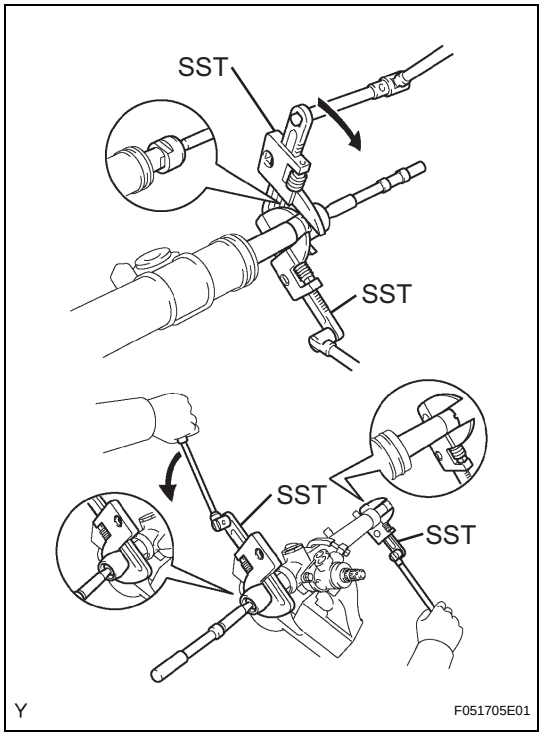

(b) Using a wrench, hold the steering rack (LH side).

(c) Using SST, remove the steering rack end (LH side) from the power steering rack.

SST 09922-10010

NOTICE:
Rotate SST in the direction shown in the illustration.

(d) Using SST, remove the steering rack end (RH side) from the power steering rack.

SST 09922-10010

NOTICE:
Rotate SST in the direction shown in the illustration.

(e) Remove the 2 claw washers.

11. REMOVE RACK GUIDE

(a) Using SST, remove the lock nut.

SST 09922-10010

(b) Remove the claw washer.

NOTICE:
Rotate SST in the direction shown in the illustration.

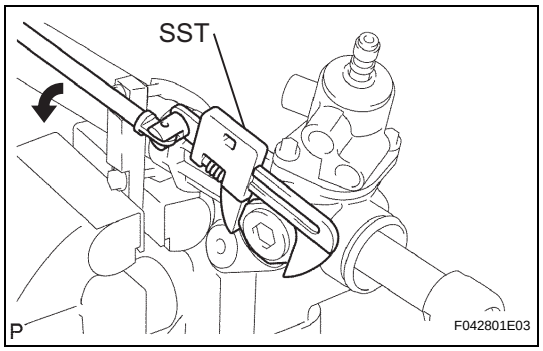

PS

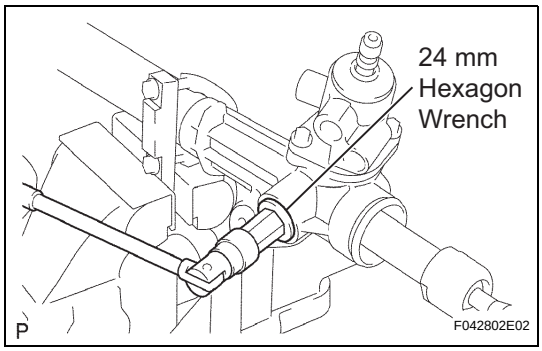

(c) Using a 24 mm hexagon wrench, remove the rack guide spring cap.
(d) Remove the spring and rack guide.

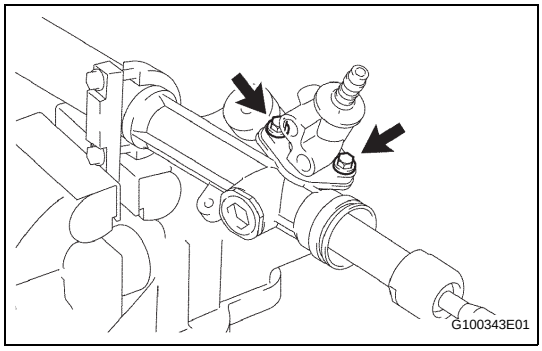

12. REMOVE POWER STEERING CONTROL VALVE
(a) Remove the 2 bolts.
(b) Pull out the control valve off the rack housing.

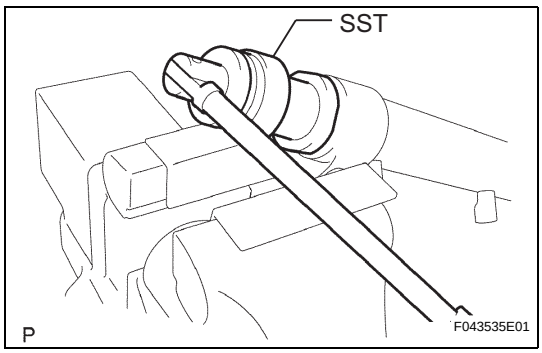

13. REMOVE CYLINDER END STOPPER
(a) Using SST, remove the stopper.
SST 09631-20120

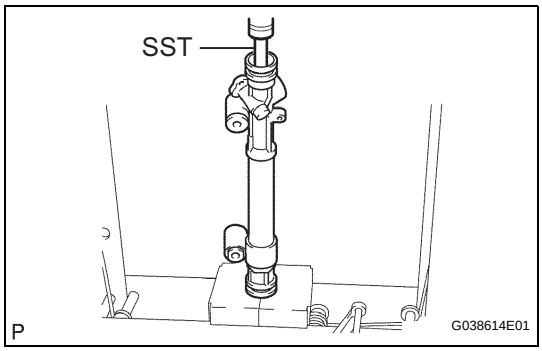

14. REMOVE STEERING RACK AND OIL SEAL
(a) Using SST, press out the steering rack and oil seal.
SST 09950-70010 (09951-07200)
NOTICE:
Take care not to drop the steering rack.
(b) Remove the oil seal from the steering rack.

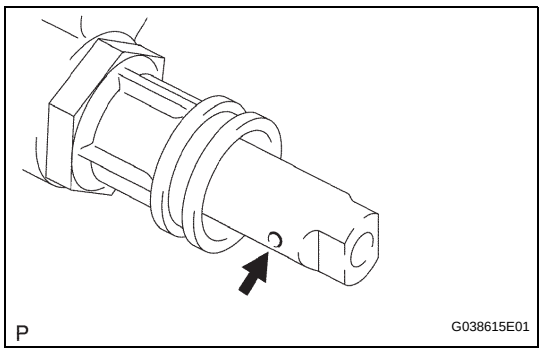

15. INSPECT POWER STEERING RACK
(a) Insert a wire 20 mm (0.79 in.) into the vent hole of the steering rack and ensure that the vent hole is not clogged with grease.
NOTICE:
If the hole is clogged, the pressure inside the boot will change after it is assembled and the steering wheel is turned.

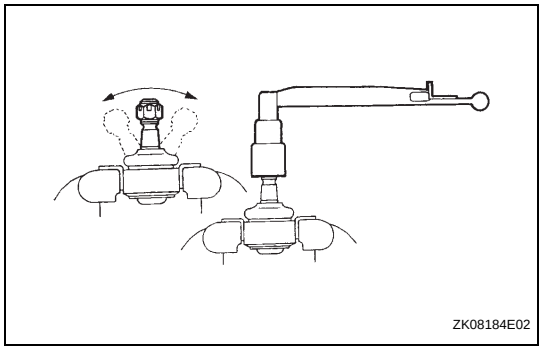
ZK08184E02

16. INSPECT TIE ROD END SUB-ASSEMBLY LH

(a) Flip the ball joint stud back and forth 5 times as shown in the illustration, before installing the nut.

(b) Using a torque wrench, turn the nut continuously at a rate of 2 to 4 seconds per turn and take the torque reading on the 5th turn.

Torque: (turning)
0.29 to 1.96 N*m (2.96 to 20 kgf*cm, 2.56 to 17.35 in.*lbf)

17. INSPECT TIE ROD END SUB-ASSEMBLY RH

HINT:
Use the same procedures described for the LH side.

18. REMOVE STEERING RACK PISTON RING

(a) Using a screwdriver, remove the "Teflon" ring and O-ring from the steering rack.

NOTICE:
Be careful not to damage the groove of the ring.

INSPECTION

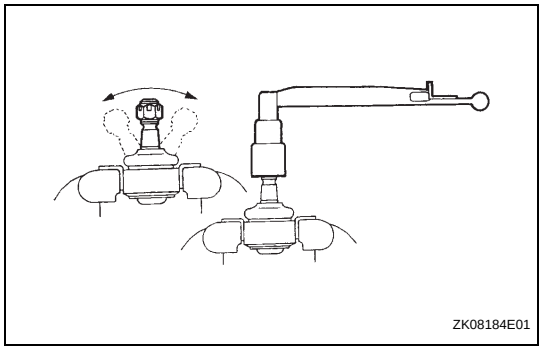
ZK08184E01

1. INSPECT TIE ROD END SUB-ASSEMBLY

(a) Flip the ball joint stud back and forth 5 times as shown in the illustration before installing the nut.

(b) Using a torque wrench, turn the nut continuously at a rate of 2 to 4 seconds per turn and check the torque reading on the 5th turn.

Torque: 0.29 to 1.96 N*m (2.96 to 20 kgf*cm, 2.56 to 17.35 in.*lbf)

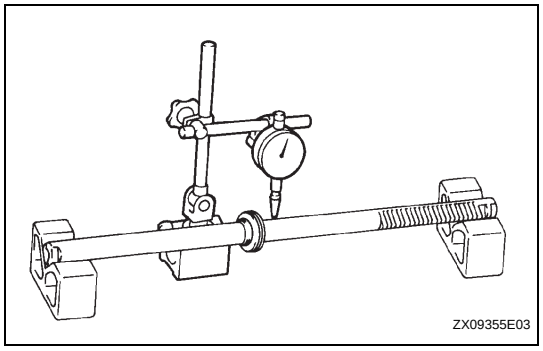
ZX09355E03

2. INSPECT POWER STEERING RACK

(a) Using a dial indicator, check the power steering rack for runout, teeth wear and damage.

Maximum runout:
0.3 mm (0.012 in.)

If necessary, replace the power steering link assembly.

(b) Check the back surface for wear and damage.
If necessary, replace the power steering link assembly.

REASSEMBLY

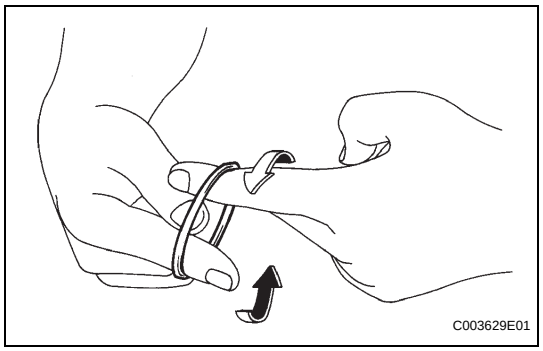
C003629E01

1. INSTALL STEERING RACK PISTON RING

(a) Coat a new O-ring with power steering fluid and install it on the steering rack.

(b) Stretch a new "Teflon" ring with your fingers.

NOTICE:
Be careful not to overstretch the teflon ring.

(c) Coat the "Teflon" ring with power steering fluid.

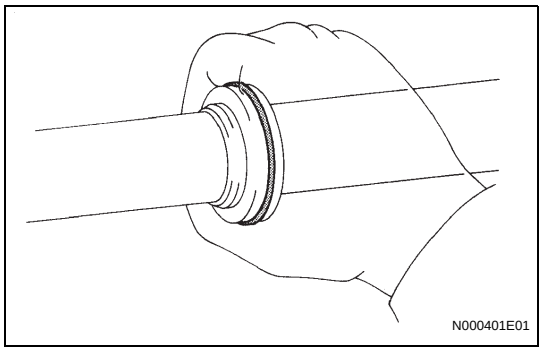
N000401E01

(d) Install the "Teflon" ring into the steering rack's groove. Grip the ring to press it into the groove.

PS

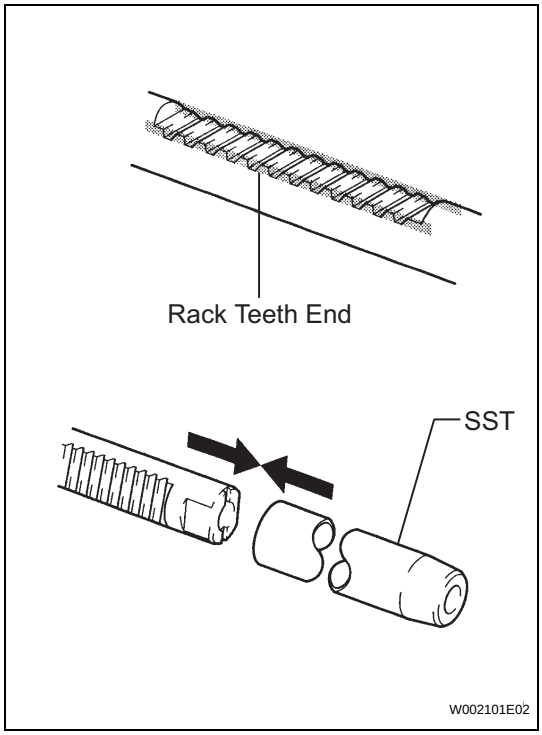

W002101E02

2. INSTALL POWER STEERING RACK

(a) Apply grease onto the rack teeth ends.
(b) Install SST onto the steering rack.
SST 09631-00350
HINT:
If necessary, scrape the burrs off the rack teeth end and burnish.
(c) Coat SST and the power piston oil seal with power steering fluid.
(d) Install the steering rack onto the rack housing.
(e) Remove SST.

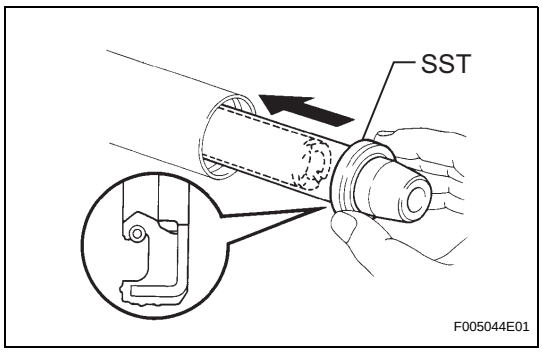

F005044E01

(f) Coat SST with power steering fluid.
SST 09631-00350
(g) Install SST onto the steering rack opposite end.
(h) Coat the lip of a new oil seal with power steering fluid. Using SST, install the oil seal onto the steering rack.
NOTICE:
- **Slide SST and the oil seal straight without tilting them.**
- **Install the oil seal facing in the correct direction.**
- **Be careful not to damage the lip of the oil seal.**

(i) Remove SST.

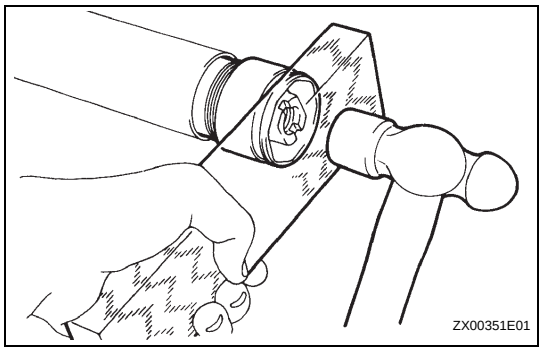

3. INSTALL CYLINDER END STOPPER

(a) Apply sealant to the stopper.

(b) Using a wooden block and hammer, tap in the stopper until it is tightly installed.

Sealant:
Part No. 08833-00080, THREE BOND 1344, LOCTITE 242 or the equivalent

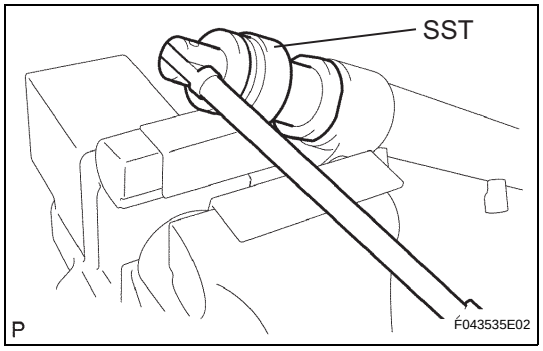

(c) Using SST, tighten the stopper.
SST 09631-20120
Torque: 145 N*m (1,479 kgf*cm, 107 ft.*lbf)

PS

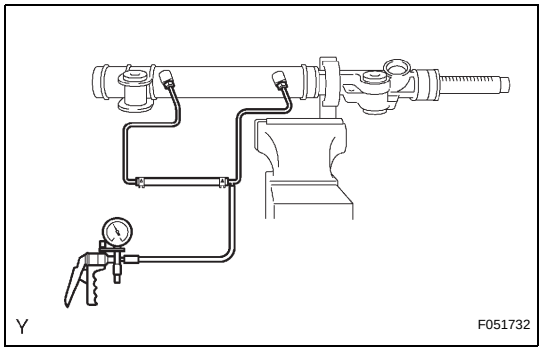

4. TEST AIR TIGHTNESS

(a) Install SST onto the unions of the rack housing.
SST 09631-12071 (09633-00010)

(b) Apply 53.33 kPa (400 mmHg, 15.75 in.Hg) of vacuum for about 30 seconds.

(c) Check that there is no change in the vacuum.
If there is a change in the vacuum, check the installation of the oil seals.

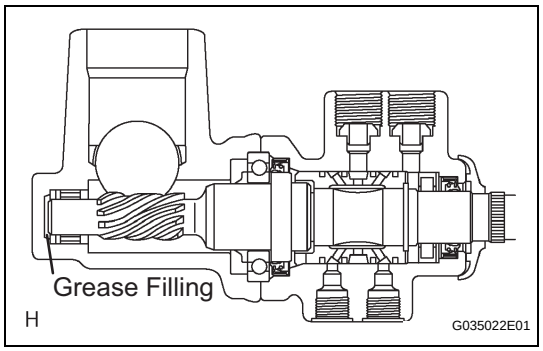

5. INSTALL POWER STEERING CONTROL VALVE

(a) Apply molybdenum disulfide base grease to the needle roller bearing inside the rack housing shown in the illustration.
Volume of grease applied:
Approximately 2 g (0.07 oz)

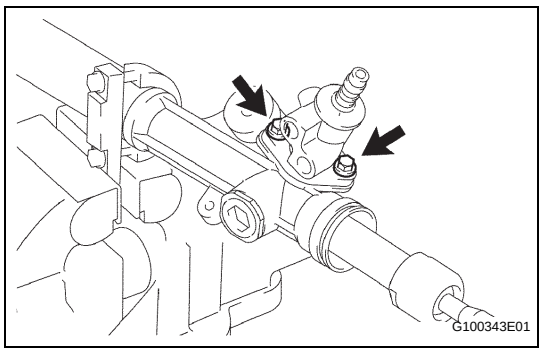

(b) Install the control valve with the 2 bolts.
Torque: 18 N*m (185 kgf*cm, 13 ft.*lbf)

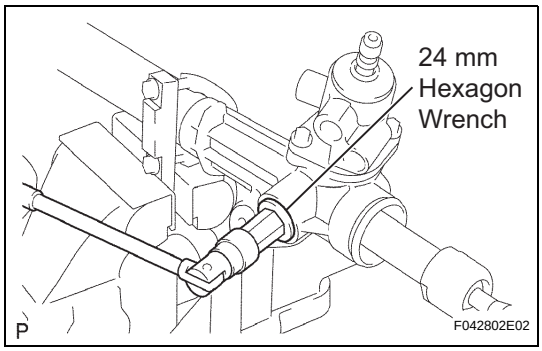

6. INSTALL RACK GUIDE

(a) Install the rack guide and spring.

(b) Apply sealant to 2 or 3 threads of the rack guide spring cap.
Sealant:
Part No. 08833-00080, THREE BOND 1344, LOCTITE 242 or the equivalent

(c) Using a 24 mm hexagon wrench, temporarily install the spring cap.

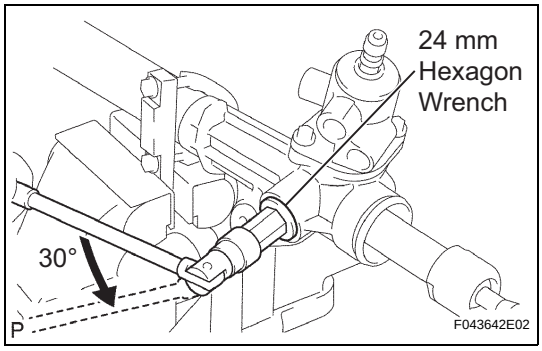

7. ADJUST TOTAL PRELOAD

(a) To prevent the steering rack teeth from damaging the lip of the oil seal, temporarily install the RH and LH rack ends.

(b) Using a 24 mm hexagon wrench, tighten the rack guide spring cap.
Torque: 25 N*m (250 kgf*cm, 18 ft.*lbf)

(c) Loosen the cap 30°.

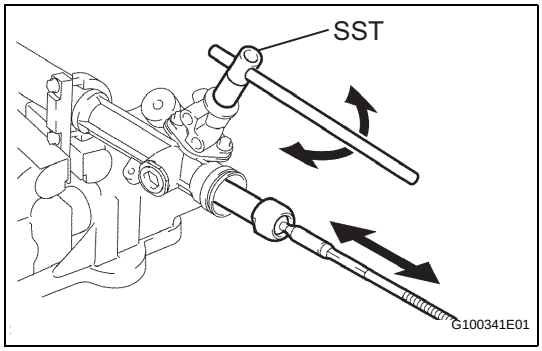

(d) Using SST, turn the control valve shaft right and left 1 or 2 times. The rack end will move in and out.
SST 09616-00011

(e) Using a 24 mm hexagon wrench, loosen the cap until the rack guide spring does not function.

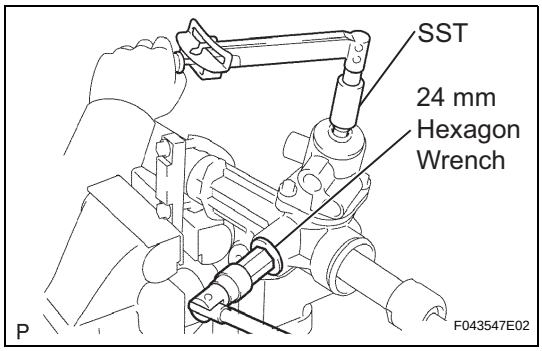

(f) Using SST, a torque wrench and 24 mm hexagon wrench, tighten the cap until the preload is within the specification.
SST 09616-00011
Torque: Preload (turning)
0.8 to 1.6 N*m (8.2 to 16.3 kgf*cm, 7.1 to 14.2 in.*lbf)
NOTICE:
Perform adjustments in the tightening direction of the spring cap.

(g) Apply sealant to 2 or 3 threads of the lock nut.
Sealant:
Part No. 08833-00080, THREE BOND 1344, LOCTITE 242 or the equivalent.

(h) Temporarily install the lock nut.

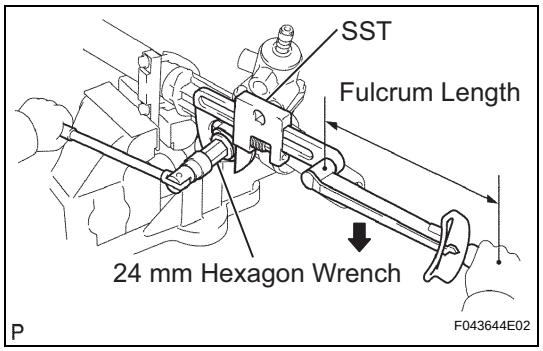

(i) Using a 24 mm hexagon wrench, hold the rack guide spring cap. Using SST, torque the nut.
SST 09922-10010
Torque: 69 N*m (704 kgf*cm, 51 ft.*lbf) for use without SST
65 N*m (660 kgf*cm, 48 ft.*lbf) for use with SST
NOTICE:
Rotate SST in the direction shown in the illustration.
HINT:
Use a torque wrench with a fulcrum length of 345 mm (13.58 in.).

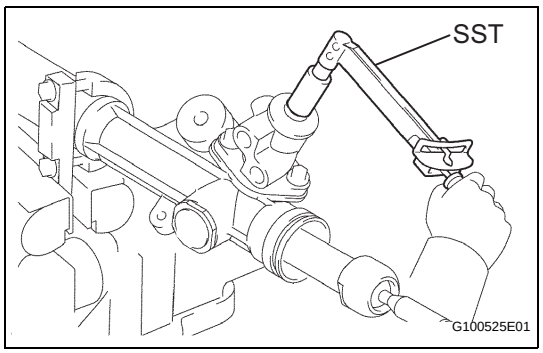

(j) Using SST, recheck the total preload.
Torque: Preload (turning)
0.8 to 1.6 N*m (8.2 to 1.6 kgf*cm, 1.1 to 14.2 in.*lbf)
SST 09616-00011

(k) Remove the RH and LH rack ends.

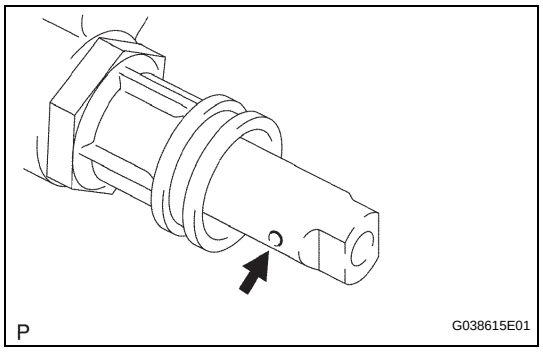

8. INSPECT POWER STEERING RACK

(a) Insert a wire 20 mm (0.79 in.) into the vent hole of the steering rack, and ensure that the vent hole is not clogged with grease.
NOTICE:
If the hole is clogged, the pressure inside the boot will change after it is assembled and the steering wheel is turned.

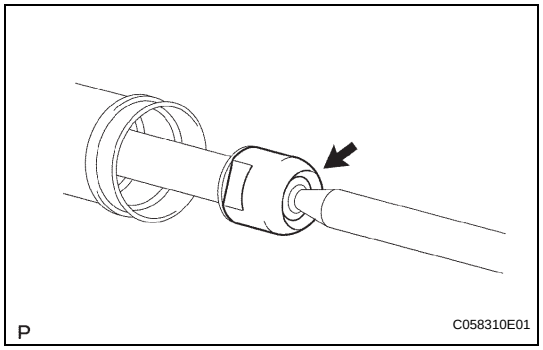

9. INSTALL STEERING RACK END SUB-ASSEMBLY

(a) Install 2 new claw washers onto the power steering rack while aligning the notch on the steering rack end with the claw.

(b) Temporarily install the 2 steering rack ends onto the power steering rack.

(c) Fill up the ball joint of the steering rack ends with MP grease.

PS

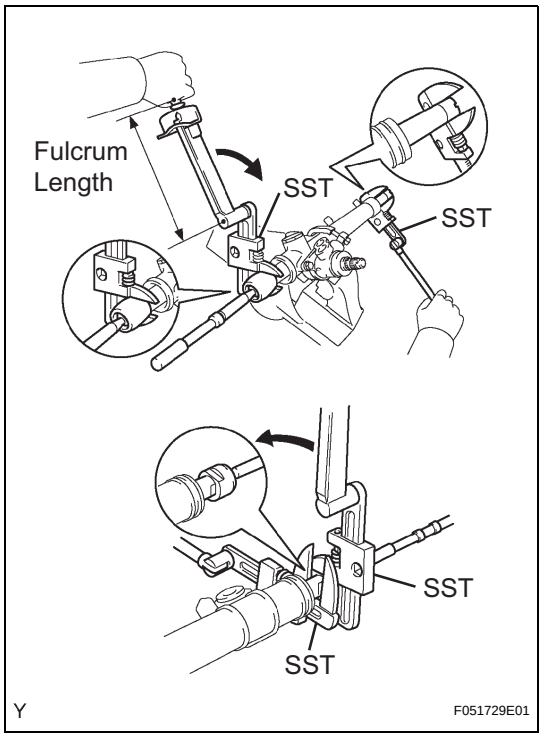

(d) Using SST, install the power steering rack end (LH side) onto the power steering rack.
SST 09922-10010
Torque: 103 N*m (1,050 kgf*cm, 76 ft.*lbf) for use without SST
98 N*m (1,000 kgf*cm, 72 ft.*lbf) for use with SST
NOTICE:
- **Rotate SST in the direction shown in the illustration.**
- **Use a torque wrench with a fulcrum length of 345 mm (13.58 in.).**

(e) Using SST and a wrench, install the power steering rack (LH side).
SST 09922-10010
Torque: 103 N*m (1,050 kgf*cm, 76 ft.*lbf) for use without SST
98 N*m (1,000 kgf*cm, 72 ft.*lbf) for use with SST
NOTICE:
- **Rotate SST in the direction shown in the illustration.**
- **Use a torque wrench with a fulcrum length of 345 mm (13.58 in.).**

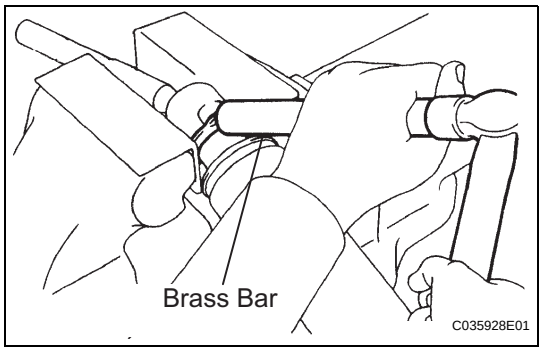

(f) Using a brass bar and hammer, stake the 2 claw washers (LH and RH sides).
NOTICE:
Do not strike the steering rack.

10. INSTALL STEERING RACK BOOT LH

(a) Install the boot.
NOTICE:
Be careful not to damage or twist the boot.

11. INSTALL STEERING RACK BOOT RH

HINT:
Use the same procedures described for the LH side.

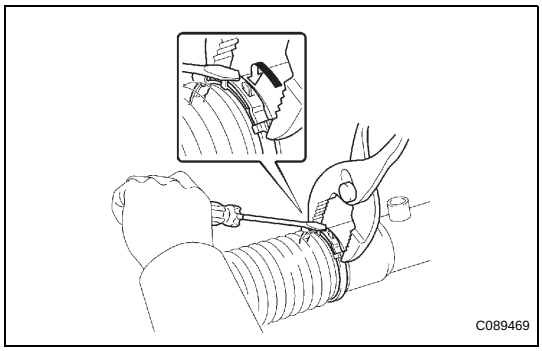

12. INSTALL STEERING RACK BOOT CLAMP LH

(a) Using the pliers and screwdriver, install the rack boot clamp, as shown in the illustration.

13. INSTALL STEERING RACK BOOT CLAMP RH

HINT:
Use the same procedures described for the LH side.

14. INSTALL STEERING RACK BOOT CLIP LH

(a) Using pliers, install the clip.

15. INSTALL STEERING RACK BOOT CLIP RH

HINT:
Use the same procedures described for the LH side.

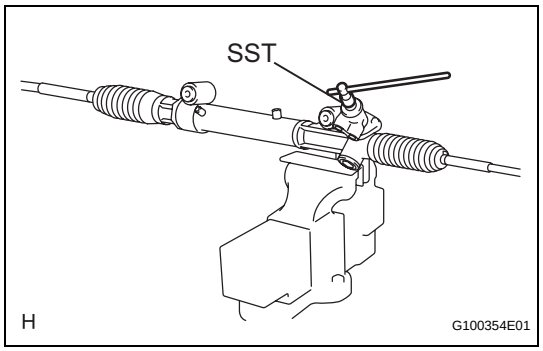

16. INSTALL POWER STEERING LINK

(a) Using SST, check that the rack boot stretches smoothly when the control valve shaft is being rotated.
SST 09616-00011

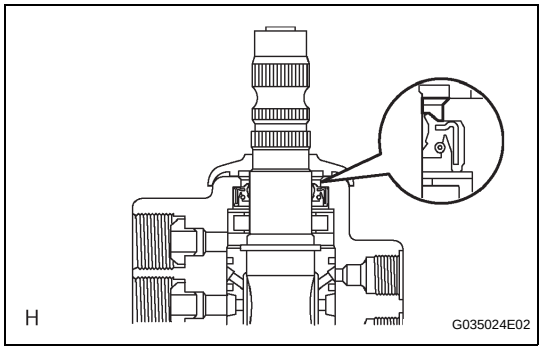

(b) Apply MP grease as shown in the illustration.
(c) Install the dust cover.

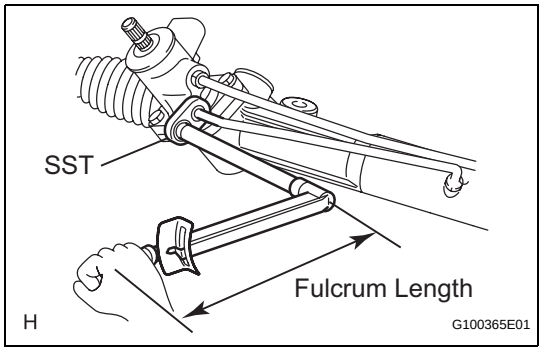

17. INSTALL STEERING TURN PRESSURE TUBE

(a) Apply power steering fluid to 2 new O-rings. Using SST, install the 2 O-rings and the LH steering turn pressure tube.
SST 09023-38201
Torque: 25 N*m (250 kgf*cm, 18 ft.*lbf) for use without SST
23 N*m (230 kgf*cm, 17 ft.*lbf) for use with SST
HINT:
- Use a torque wrench with a fulcrum length of 345 mm (13.58 in.).
- This torque value is effective when SST is parallel to the torque wrench.

(b) Apply power steering fluid to 2 new O-rings. Using SST, install the 2 O-rings and the RH steering turn pressure tube.
SST 09023-38201
Torque: 25 N*m (250 kgf*cm, 18 ft.*lbf) for use without SST
23 N*m (235 kgf*cm, 17 ft.*lbf) for use with SST
HINT:
- Use a torque wrench with a fulcrum length of 345 mm (13.58 in.).
- This torque value is effective when SST is parallel to the torque wrench.

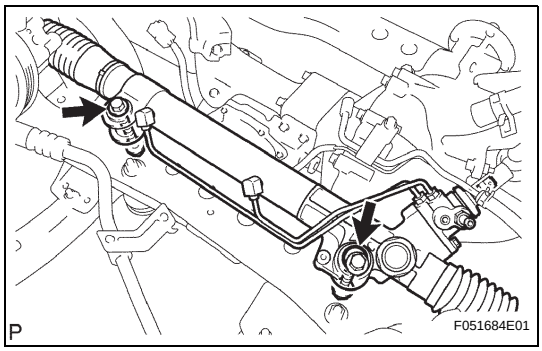

INSTALLATION

1. INSTALL POWER STEERING LINK

(a) Install the power steering link with the 2 bolts and 2 nuts.
Torque: 100 N*m (1,020 kgf*cm, 74 ft.*lbf)
NOTICE:
Never turn the nut since it has a detent. Be sure to turn only the bolt.

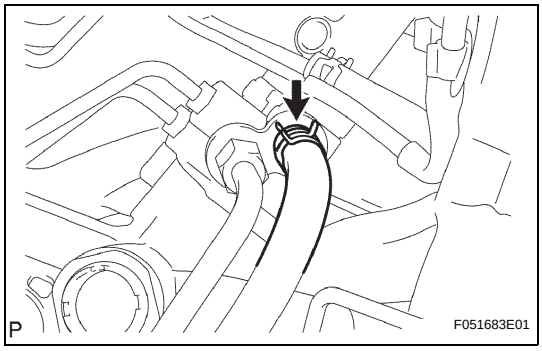

2. INSTALL PRESSURE FEED TUBE ASSEMBLY

(a) Connect the return hose with the clip.

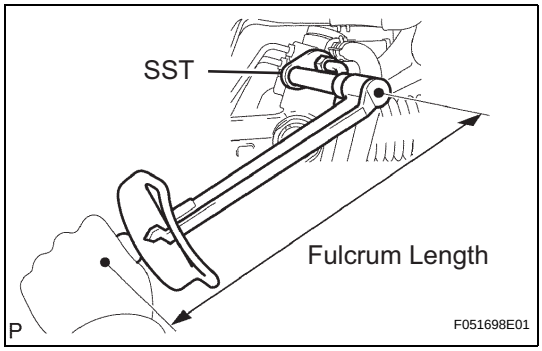

(b) Using SST, tighten the flare nut and connect the pressure feed tube.
SST 09023-12701
Torque: for use without SST
44 N*m (449 kgf*cm, 33 ft.*lbf)
for use with SST
42 N*m (420 kgf*cm, 31 ft.*lbf)
HINT:
- Use a torque wrench with a fulcrum length of 300 mm (11.81 in.).
- This torque value is effective when SST is parallel to the torque wrench.

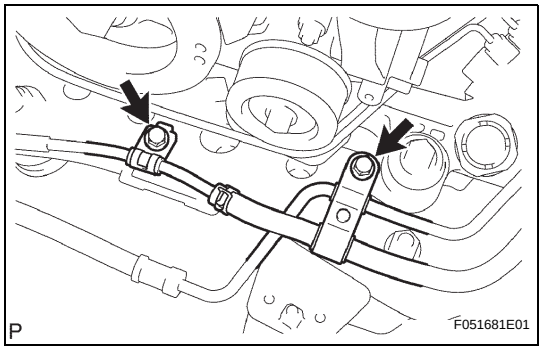

(c) Install the tube support brackets with the 2 bolts.
Torque: 28 N*m (286 kgf*cm, 21 ft.*lbf)

PS

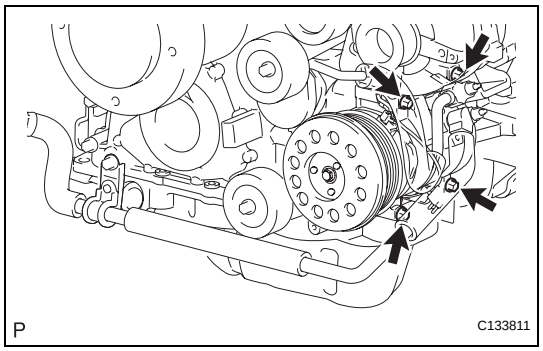

3. INSTALL COOLER COMPRESSOR ASSEMBLY

(a) Install the cooler compressor and magnetic clutch with the 4 bolts.

4. INSTALL TIE ROD END SUB-ASSEMBLY LH

(a) Install the tie rod end onto the steering knuckle arm.

(b) Install the nut.
Torque: 91 N*m (928 kgf*cm, 67 ft.*lbf)

(c) Install a new cotter pin.

5. INSTALL TIE ROD END SUB-ASSEMBLY RH

HINT:
The installation procedure for the RH side is the same as that for the LH side.

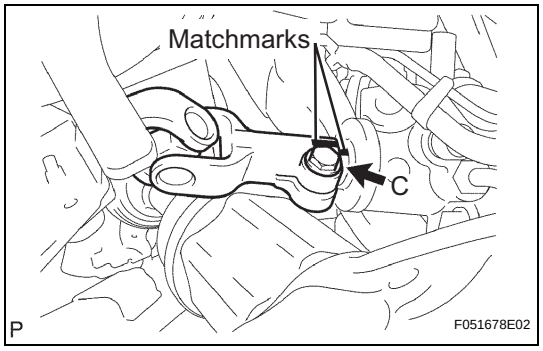

6. INSTALL NO. 2 STEERING INTERMEDIATE SHAFT

(a) Align the matchmarks on the No. 2 steering intermediate shaft and power steering link.

(b) Install the No. 2 steering intermediate shaft onto the power steering link with bolt C.
Torque: 36 N*m (367 kgf*cm, 27 ft.*lbf)

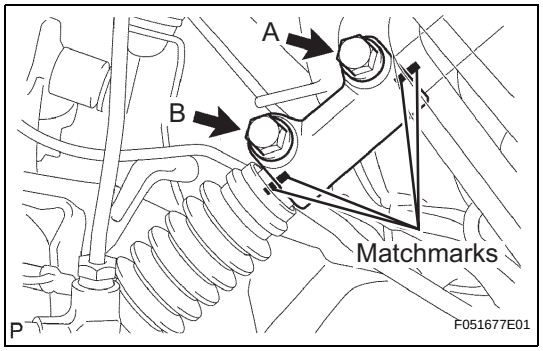

(c) Align the matchmarks on the steering intermediate shaft and steering sliding yoke.

(d) Install the steering sliding yoke onto the steering intermediate shaft and slide it upward.

(e) Align the matchmarks on the steering sliding yoke and No. 2 steering intermediate shaft.

(f) Install the steering sliding yoke with bolts A and B.
Torque: 36 N*m (367 kgf*cm, 27 ft.*lbf)

7. REMOVE FAN AND GENERATOR V BELT (See page EM-6)

8. INSTALL FRONT WHEELS
Torque: 113 N*m (1,152 kgf*cm, 83 ft.*lbf)

9. PLACE FRONT WHEELS FACING STRAIGHT AHEAD

10. INSPECT STEERING WHEEL CENTER POINT

11. CONNECT CABLE TO NEGATIVE BATTERY TERMINAL
Torque: 3.9 N*m (40 kgf*cm, 35 in.*lbf)

12. ADD POWER STEERING FLUID

13. BLEED POWER STEERING FLUID (See page PS-2)

14. CHECK FOR POWER STEERING FLUID LEAKAGE

15. INSPECT AND ADJUST FRONT WHEEL ALIGNMENT (See page SP-2)

16. INSTALL NO. 1 ENGINE UNDER COVER SUB-ASSEMBLY (See page EM-7)

PS

POWER STEERING LINK (for 4WD)

COMPONENTS

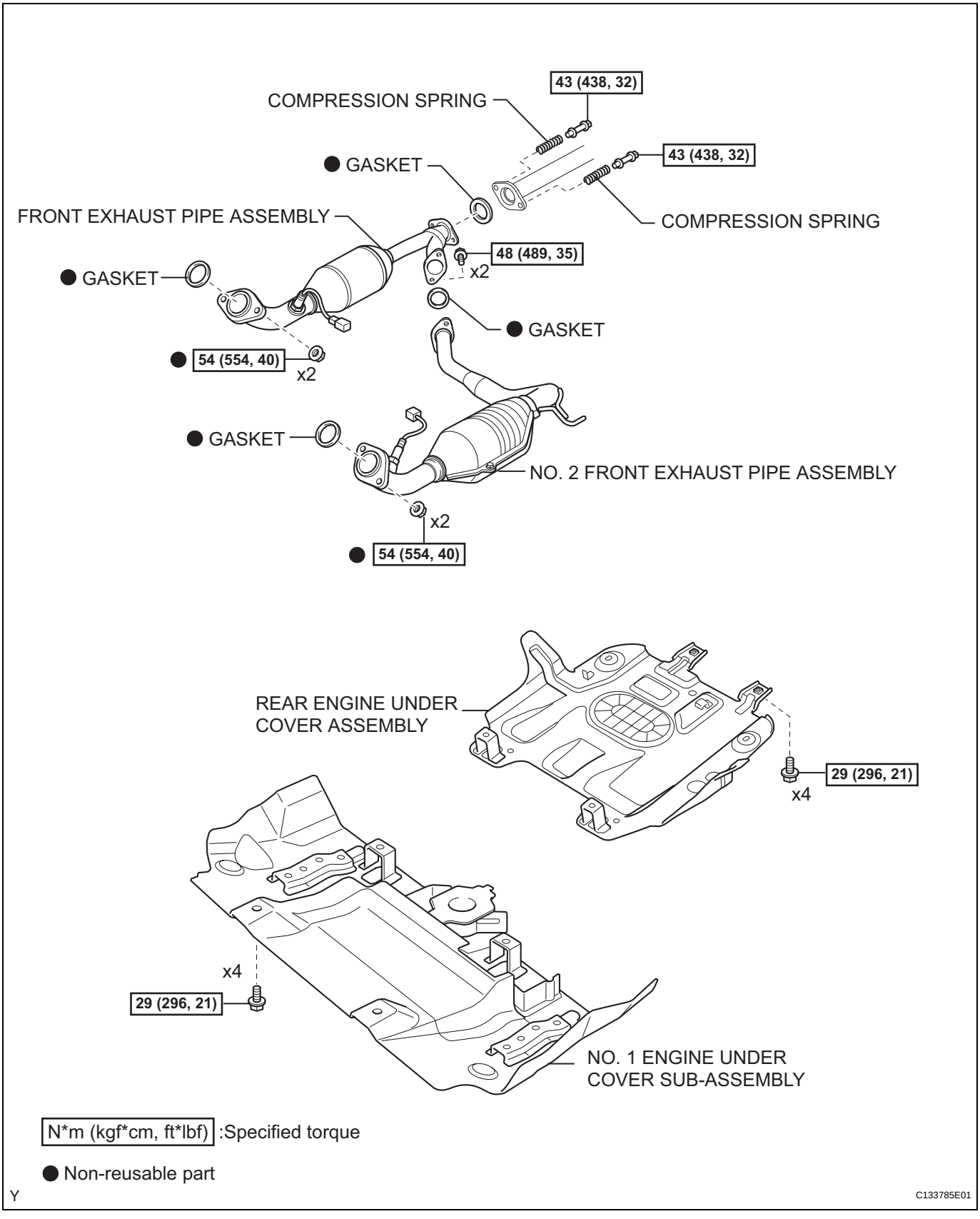

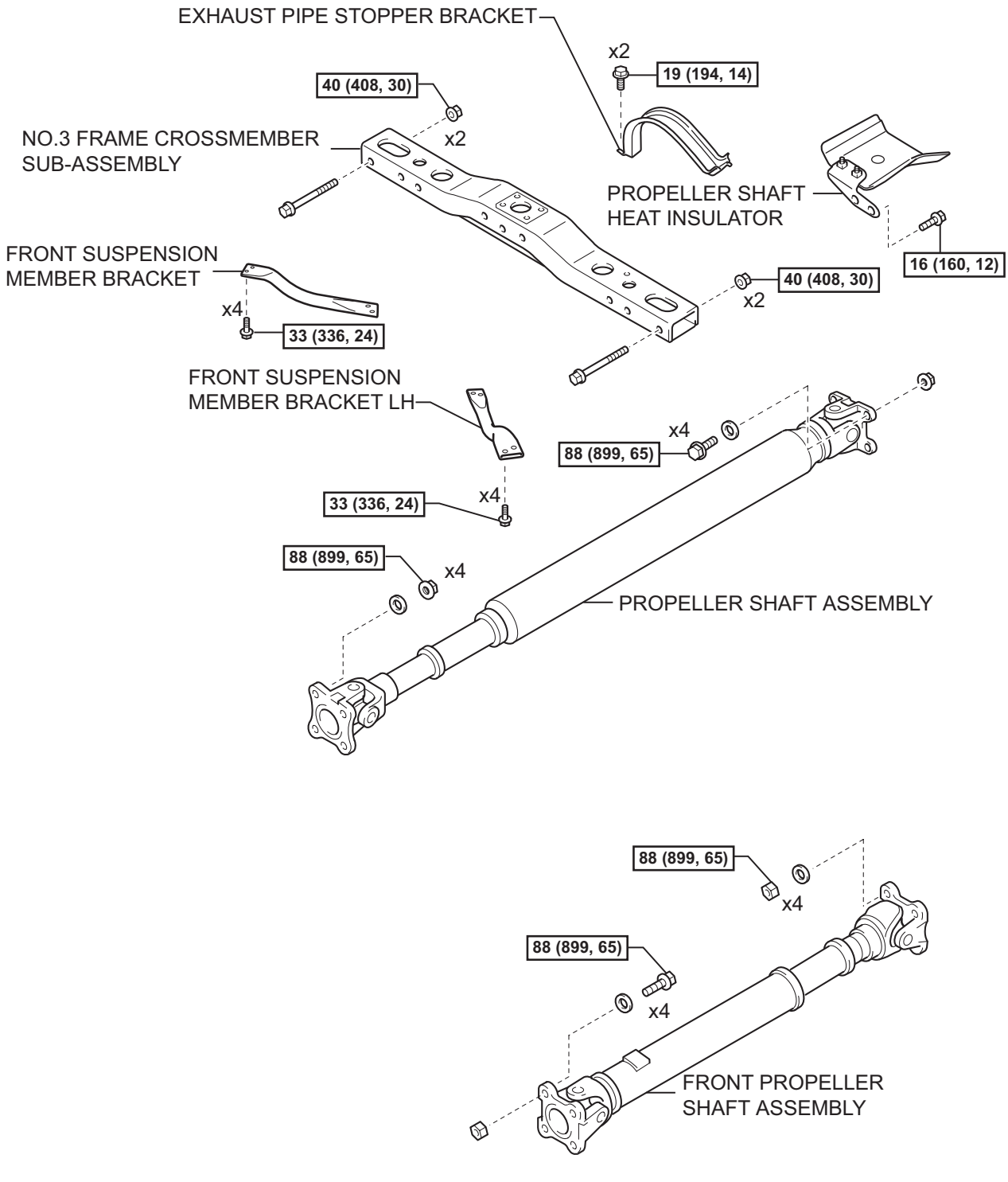

N*m (kgf*cm, ft*lbf) :Specified torque

Y

C137987E01

PS

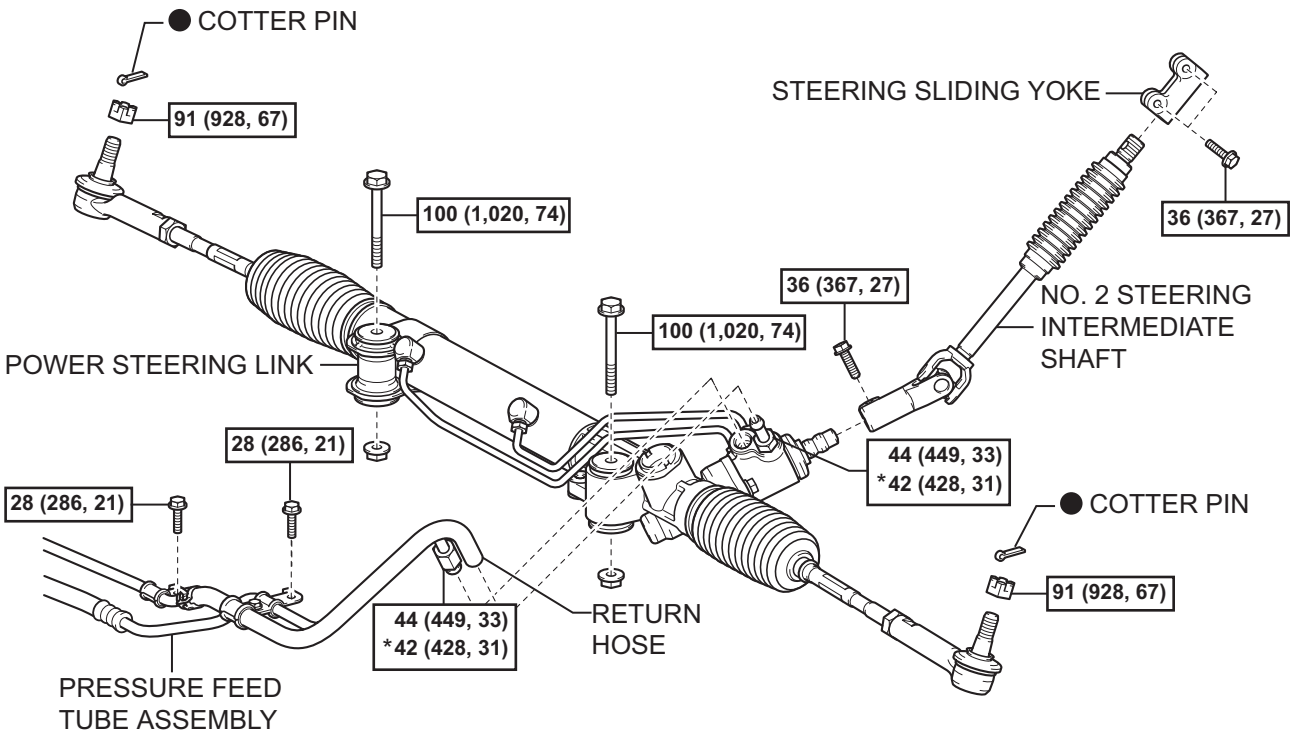

[N*m (kgf*cm, ft*lbf)] : Specified torque ● Non-reusable part * For use with SST

P

C133818E01

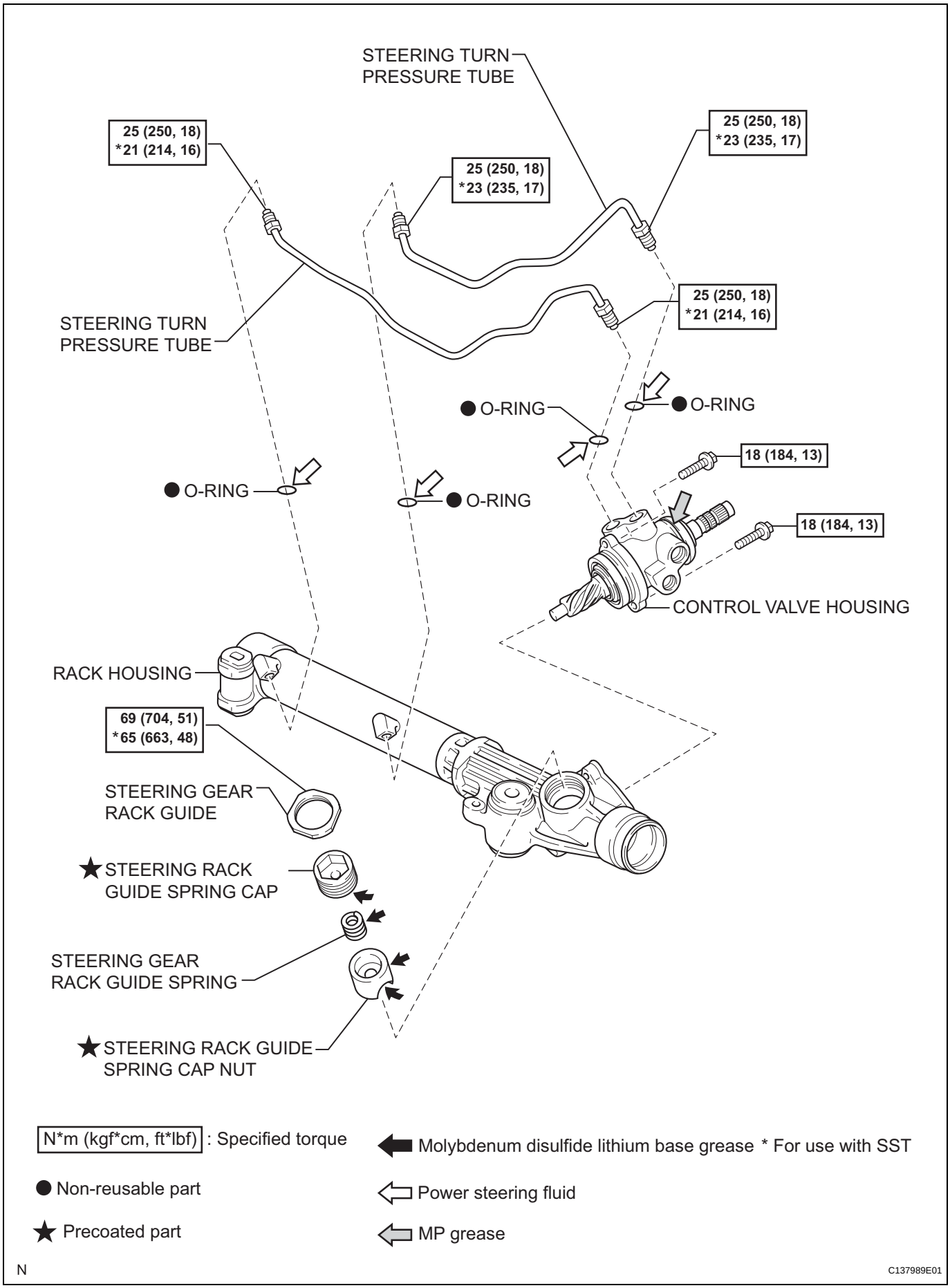
STEERING TURN PRESSURE TUBE
25 (250, 18) *21 (214, 16)
25 (250, 18) *23 (235, 17)
25 (250, 18) *23 (235, 17)
25 (250, 18) *21 (214, 16)
STEERING TURN PRESSURE TUBE
● O-RING
● O-RING
● O-RING
● O-RING
18 (184, 13)
18 (184, 13)
CONTROL VALVE HOUSING
RACK HOUSING
69 (704, 51) *65 (663, 48)
STEERING GEAR RACK GUIDE
★ STEERING RACK GUIDE SPRING CAP
STEERING GEAR RACK GUIDE SPRING
★ STEERING RACK GUIDE SPRING CAP NUT
N*m (kgf*cm, ft*lbf) : Specified torque
● Non-reusable part
★ Precoated part
Molybdenum disulfide lithium base grease * For use with SST
Power steering fluid
MP grease
N
C137989E01

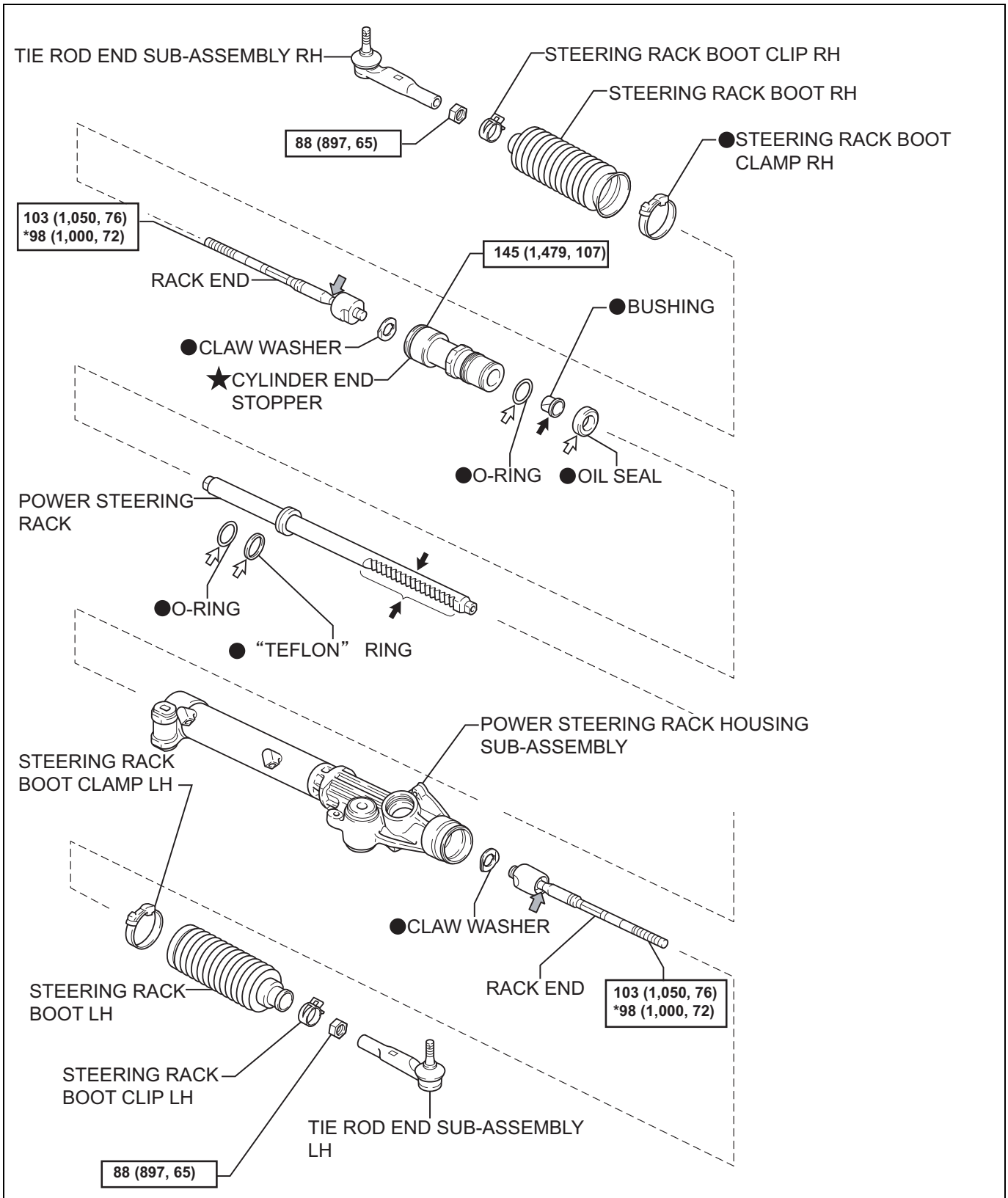

N*m (kgf*cm, ft.*lbf) ; Specified torque

●Non-reusable part

★ Liquid sealant

⬅ Molybdenum disulfide lithium base grease

⇦ Power steering fluid ⇦ MP grease

* For use with SST

N

C137988E01

REMOVAL

1. **DISCONNECT CABLE FROM NEGATIVE BATTERY TERMINAL**
2. **PLACE FRONT WHEELS FACING STRAIGHT AHEAD**
3. **REMOVE FRONT WHEELS**
4. **REMOVE NO. 1 ENGINE UNDER COVER SUB-ASSEMBLY (See page EM-6)**
5. **REMOVE REAR ENGINE UNDER COVER ASSEMBLY**
   (a) Remove the 4 bolts, then remove the rear engine under cover.
6. **REMOVE NO. 2 EXHAUST FRONT PIPE ASSEMBLY (See page EX-4)**
7. **REMOVE FRONT EXHAUST PIPE ASSEMBLY (See page EX-4)**
8. **REMOVE PROPELLER SHAFT HEAT INSULATOR (See page AT-178)**
9. **REMOVE FRONT PROPELLER SHAFT ASSEMBLY (See page PR-2)**
10. **REMOVE PROPELLER SHAFT ASSEMBLY (See page PR-9)**
11. **REMOVE AUTOMATIC TRANSMISSION WITH TRANSFER (See page AT-180)**
12. **REMOVE FRONT SUSPENSION MEMBER BRACKET LH (See page AT-180)**
13. **REMOVE FRONT SUSPENSION MEMBER BRACKET (See page AT-180)**
14. **REMOVE NO. 3 FRAME CROSSMEMBER SUB-ASSEMBLY (See page MT-11)**
15. **REMOVE NO.2 STEERING INTERMEDIATE SHAFT SUB-ASSEMBLY**
    (a) Fix the steering wheel with the seat belt in order to prevent it from rotating.
    HINT:
    The operation is effective for preventing any damage to the spiral cable.

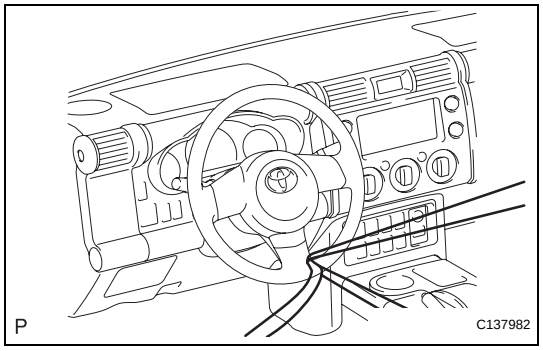

PS

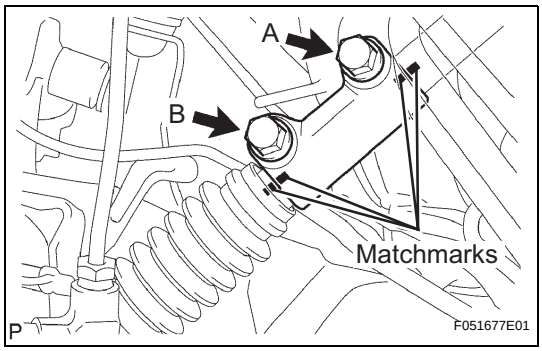

(b) Place matchmarks on the steering sliding yoke, No. 2 steering intermediate shaft and steering intermediate shaft.
(c) Remove bolts A and B from the steering sliding yoke.
(d) Slide the steering sliding yoke up and separate it from the No. 2 steering intermediate shaft.
(e) Pull down the steering sliding yoke from the steering intermediate shaft to remove it.

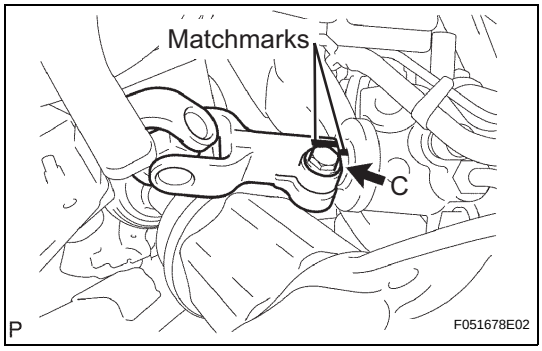

(f) Place matchmarks on the No. 2 steering intermediate shaft and power steering link.
(g) Remove bolt C from the No. 2 steering intermediate shaft.
(h) Slide the No. 2 steering intermediate shaft up and remove it from the power steering link.

16. SEPARATE TIE ROD END SUB-ASSEMBLY LH

(a) Remove the cotter pin and nut.

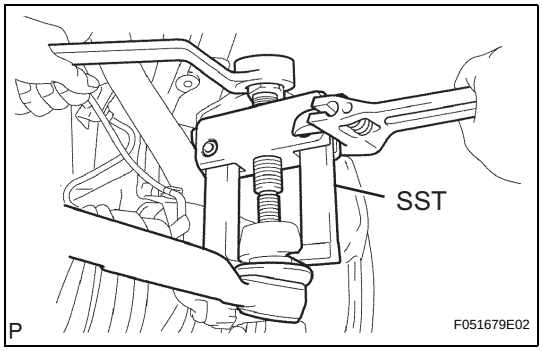

(b) Using SST, separate the tie rod end from the steering knuckle arm.
SST 09628-62011

17. SEPARATE TIE ROD END SUB-ASSEMBLY RH

HINT:
The removal procedure for the RH side is the same as that for the LH side.

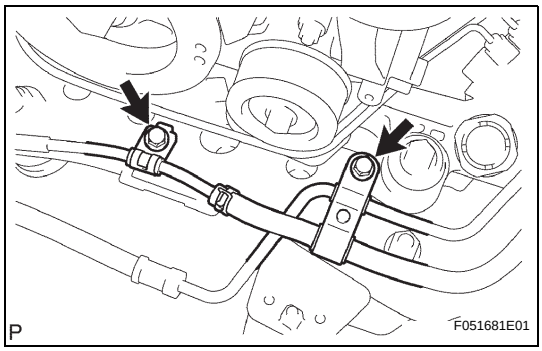

18. SEPARATE PRESSURE FEED TUBE ASSEMBLY

(a) Remove the 2 bolts and separate the tube support brackets.

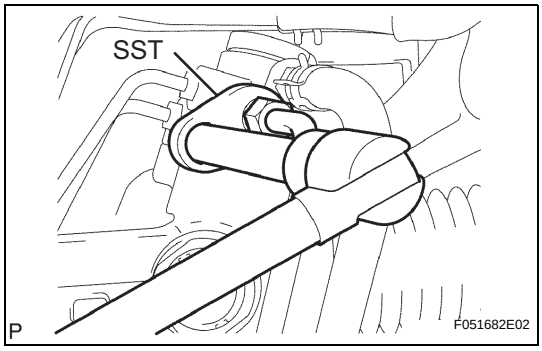

(b) Using SST, loosen the flare nut and separate the pressure feed tube.
SST 09023-12701

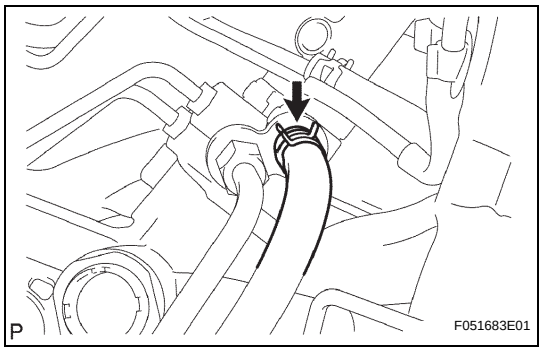

(c) Disengage the clip and disconnect the return hose.

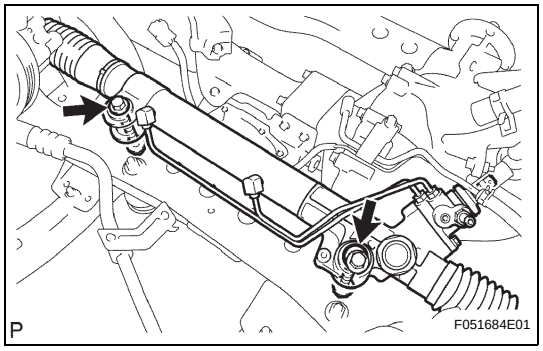

19. REMOVE POWER STEERING LINK

(a) Remove the 2 bolts and 2 nuts.
NOTICE:
The nut has a detent, so never turn the nut. Be sure to turn only the bolt.

(b) Tilt the transmission and remove the power steering link.

PS

DISASSEMBLY

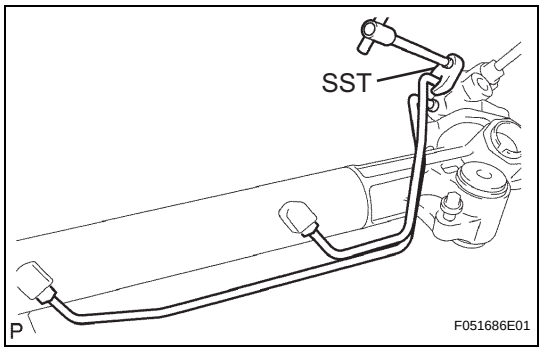

1. FIX POWER STEERING LINK

(a) Using SST, remove the 2 turn pressure tubes.
SST 09023-38201

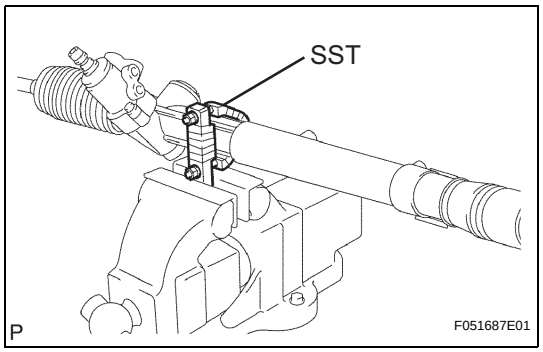

(b) Using SST, fix the steering link between aluminum plates in a vise, as shown in the illustration.
SST 09612-00012

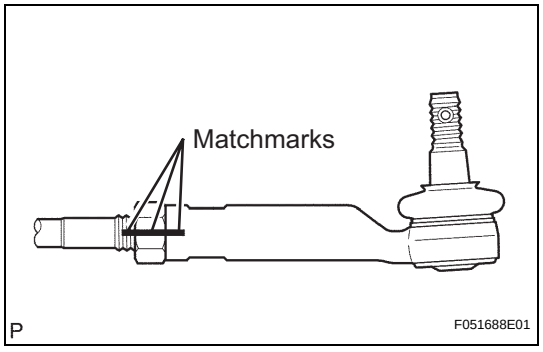

2. REMOVE TIE ROD END SUB-ASSEMBLY LH

(a) Place matchmarks on the tie rod end, lock nut and rack end.

(b) Loosen the lock nut and remove the tie rod end and lock nut.

3. REMOVE TIE ROD END SUB-ASSEMBLY RH

HINT:
Use the same procedures described for the LH side.

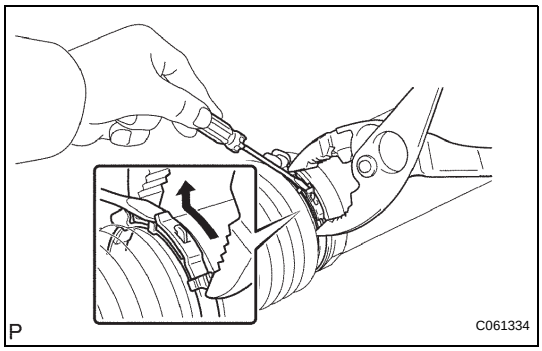

4. REMOVE STEERING RACK BOOT CLAMP LH

(a) Using pliers and a screwdriver, loosen the clamp.
HINT:
Mark the RH and LH boots.
NOTICE:
Be careful not to damage the boot.

5. REMOVE STEERING RACK BOOT CLAMP RH

HINT:
Use the same procedures described for the LH side.

6. REMOVE STEERING RACK BOOT CLIP LH

(a) Using pliers, remove the clip.
NOTICE:
Be careful not to damage the boot.

7. REMOVE STEERING RACK BOOT CLIP RH

HINT:
Use the same procedures described for the LH side.

8. REMOVE STEERING RACK BOOT LH

9. REMOVE STEERING RACK BOOT RH

10. REMOVE STEERING RACK END SUB-ASSEMBLY

(a) Using a screwdriver and hammer, stake back the 2 washers (LH and RH sides).
NOTICE:
Do not strike the steering rack.

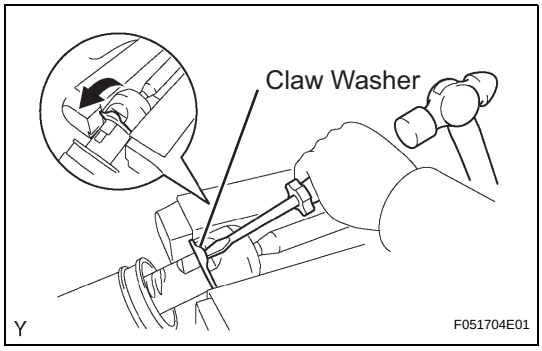

(b) Using a wrench, hold the steering rack (LH side).

(c) Using SST, remove the steering rack end (LH side) from the power steering rack.
SST 09922-10010
NOTICE:
Rotate SST in the direction shown in the illustration.

(d) Using SST, remove the steering rack end (RH side) from the power steering rack.
SST 09922-10010
NOTICE:
Rotate SST in the direction shown in the illustration.

(e) Remove the 2 claw washers.

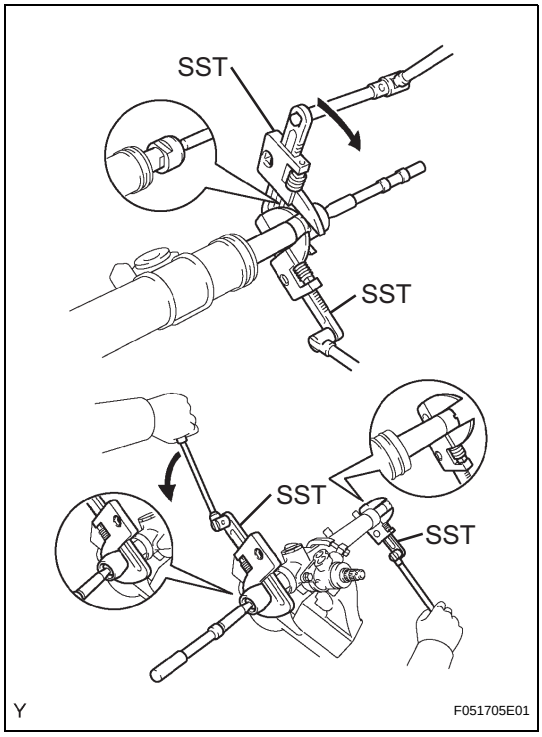

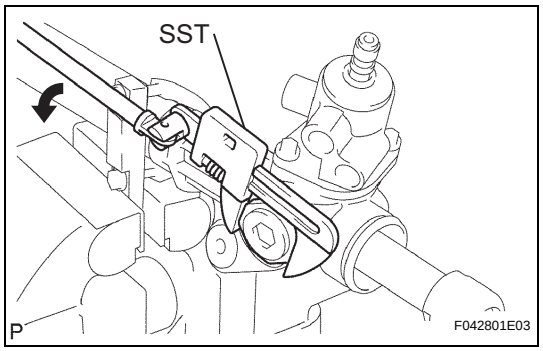

11. REMOVE RACK GUIDE

(a) Using SST, remove the lock nut.
SST 09922-10010

(b) Remove the claw washer.
NOTICE:
Rotate SST in the direction shown in the illustration.

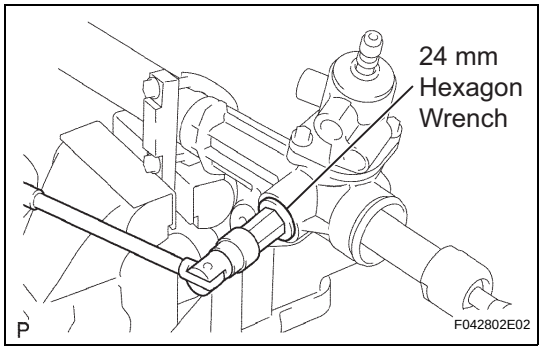

(c) Using a 24 mm hexagon wrench, remove the rack guide spring cap.

(d) Remove the spring and rack guide.

PS

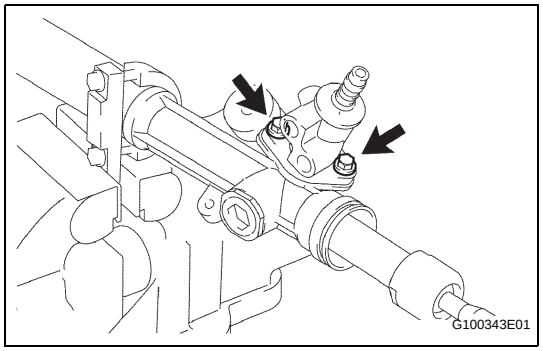

12. REMOVE POWER STEERING CONTROL VALVE

(a) Remove the 2 bolts.

(b) Pull out the control valve from the rack housing.

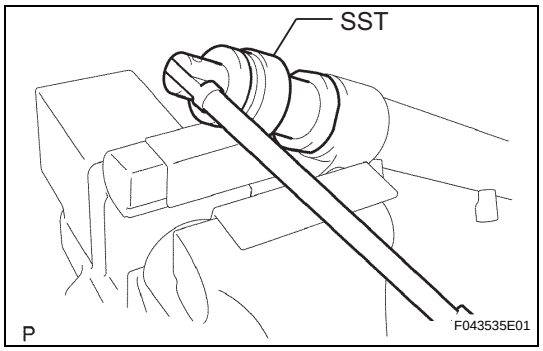

13. REMOVE CYLINDER END STOPPER

(a) Using SST, remove the stopper.
SST 09631-20120

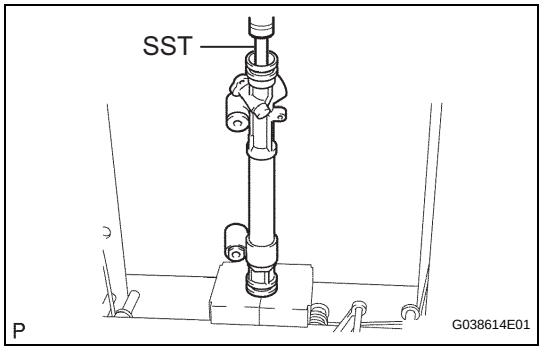

14. REMOVE STEERING RACK AND OIL SEAL

(a) Using SST, press out the steering rack and oil seal.
SST 09950-70010 (09951-07200)
NOTICE:
Take care not to drop the steering rack.

(b) Remove the oil seal from the steering rack.

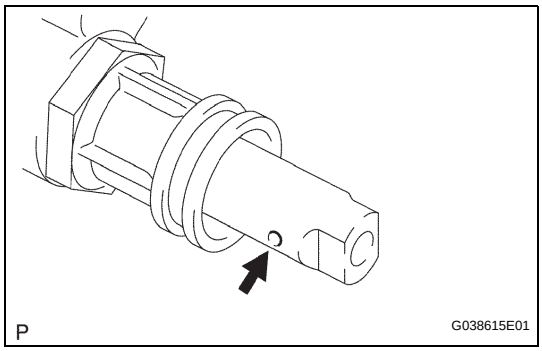

15. INSPECT POWER STEERING RACK

(a) Insert a wire 20 mm (0.79 in.) into the vent hole of the steering rack and ensure that the vent hole is not clogged with grease.

NOTICE:

If the hole is clogged, the pressure inside the boot will change after it is assembled and the steering wheel is turned.

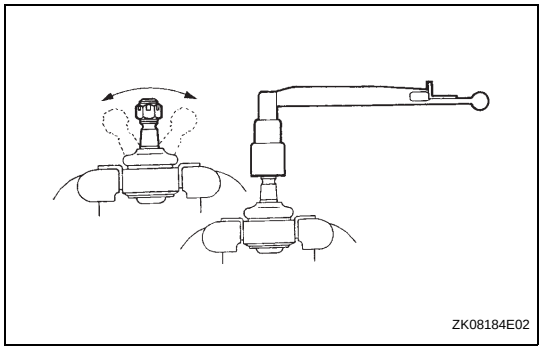

16. INSPECT TIE ROD END SUB-ASSEMBLY LH

(a) Flip the ball joint stud back and forth 5 times as shown in the illustration, before installing the nut.

(b) Using a torque wrench, turn the nut continuously at a rate of 2 to 4 seconds per turn and take the torque reading on the 5th turn.

Torque: (turning)

0.29 to 1.96 N*m (2.96 to 20 kgf*cm, 2.56 to 17.35 in.*lbf)

17. INSPECT TIE ROD END SUB-ASSEMBLY RH

HINT:

Use the same procedures described for the LH side.

18. REMOVE STEERING RACK PISTON RING

(a) Using a screwdriver, remove the "Teflon" ring and O-ring from the steering rack.

NOTICE:

Be careful not to damage the groove of the ring.

INSPECTION

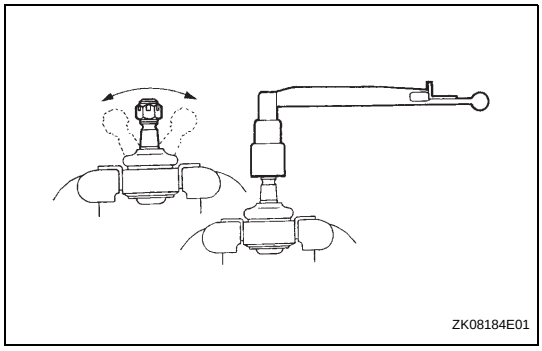

1. INSPECT TIE ROD END SUB-ASSEMBLY

(a) Flip the ball joint stud back and forth 5 times as shown in the illustration before installing the nut.

(b) Using a torque wrench, turn the nut continuously at a rate of 2 to 4 seconds per turn and check the torque reading on the 5th turn.

Torque: 0.29 to 1.96 N*m (2.96 to 20 kgf*cm, 2.56 to 17.35 in.*lbf)

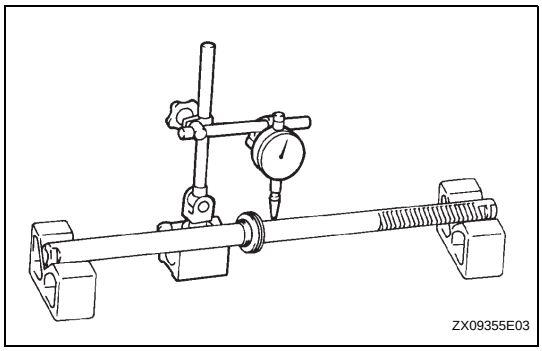

2. INSPECT POWER STEERING RACK

(a) Using a dial indicator, check the power steering rack for runout, teeth wear and damage.

Maximum runout:

0.3 mm (0.012 in.)

If necessary, replace the power steering link assembly.

(b) Check the back surface for wear and damage.

If necessary, replace the power steering link assembly.

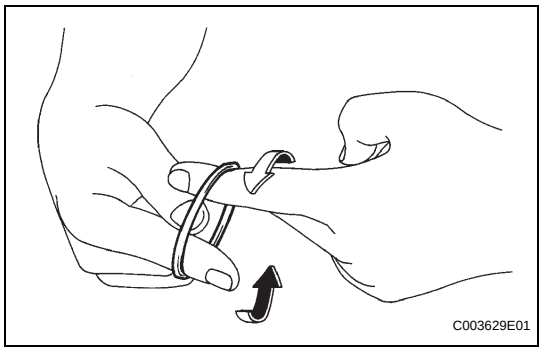
C003629E01

REASSEMBLY

1. INSTALL STEERING RACK PISTON RING

(a) Coat a new O-ring with power steering fluid and install it onto the steering rack.

(b) Stretch a new "Teflon" ring with your fingers.
NOTICE:
Be careful not to overstretch the "Teflon" ring.

(c) Coat the "Teflon" ring with power steering fluid.

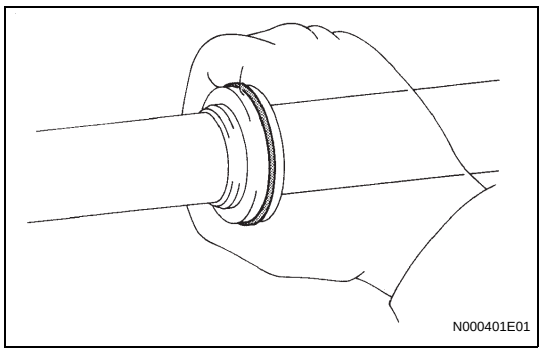
N000401E01

(d) Install the "Teflon" ring onto the steering rack groove. Grip the ring to press it into the groove.

PS

2. INSTALL POWER STEERING RACK

(a) Apply grease onto the rack teeth ends.

(b) Install SST onto the steering rack.
SST 09631-00350
HINT:
If necessary, scrape the burrs off the rack teeth end and burnish.

(c) Coat SST and the power piston oil seal with power steering fluid.

(d) Install the steering rack onto the rack housing.

(e) Remove SST.

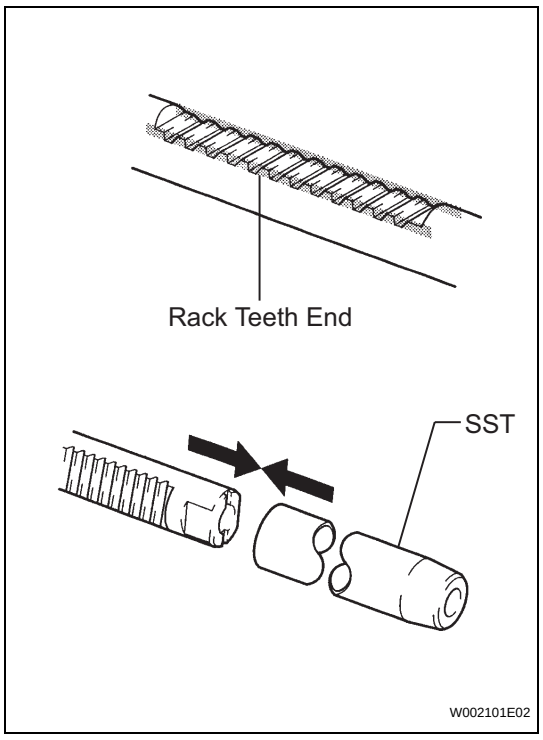

W002101E02

(f) Coat SST with power steering fluid.
SST 09631-00350

(g) Install SST onto the steering rack opposite end.

(h) Coat the lip of a new oil seal with power steering fluid. Using SST, install the oil seal onto the steering rack.
NOTICE:
- **Slide SST and the oil seal straight without tilting them.**
- **Install the oil seal facing in the correct direction.**

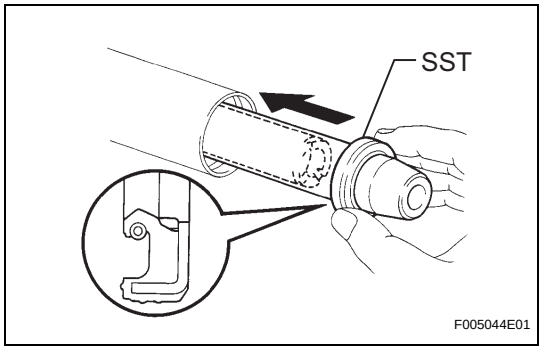

F005044E01

- **Be careful not to damage the lip of the oil seal.**

(i) Remove SST.

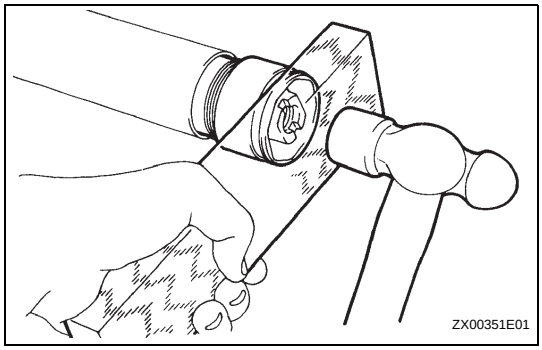

3. INSTALL CYLINDER END STOPPER

(a) Apply sealant to the stopper.

(b) Using a wooden block and hammer, tap in the stopper until it is tightly installed.

Sealant:
Part No. 08833-00080, THREE BOND 1344, LOCTITE 242 or the equivalent

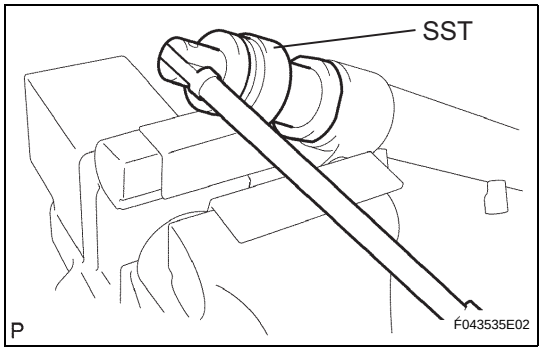

(c) Using SST, tighten the stopper.
SST 09631-20120
Torque: 145 N*m (1,479 kgf*cm, 107 ft.*lbf)

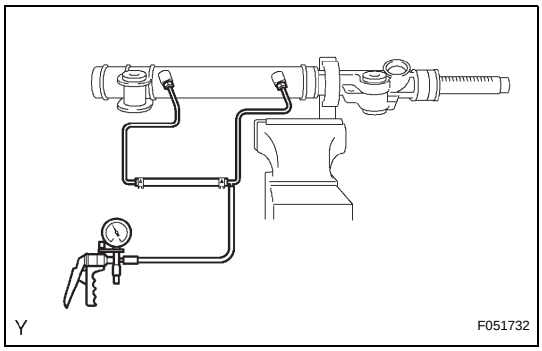

4. TEST AIR TIGHTNESS

(a) Install SST to the unions of the rack housing.
SST 09631-12071 (09633-00010)

(b) Apply 53.33 kPa (400 mmHg, 15.75 in.Hg) of vacuum for about 30 seconds.

(c) Check that there is no change in the vacuum.
If there is a change in the vacuum, check the installation of the oil seals.

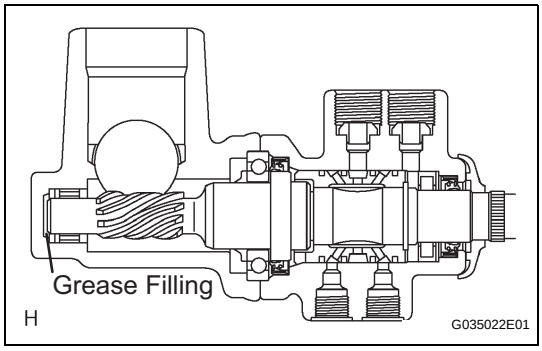

5. INSTALL POWER STEERING CONTROL VALVE

(a) Apply molybdenum disulfide base grease to the needle roller bearing inside the rack housing shown in the illustration.

Volume of grease applied:
Approximately 2 g (0.07 oz)

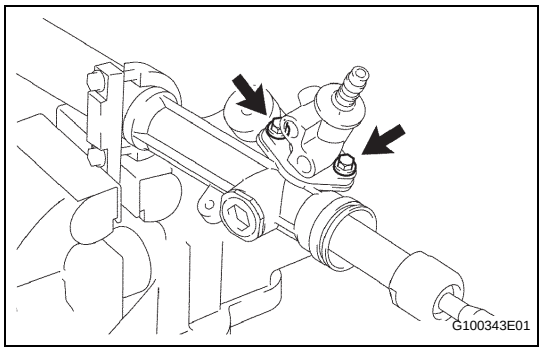

(b) Install the control valve with the 2 bolts.
Torque: 18 N*m (185 kgf*cm, 13 ft.*lbf)

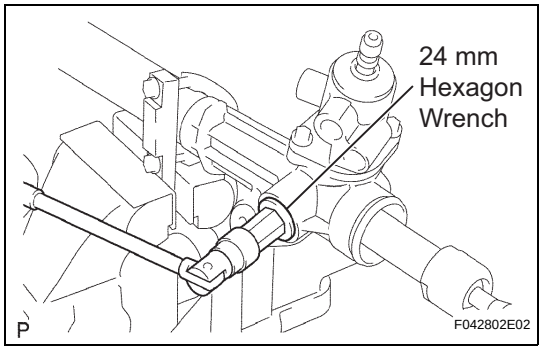

6. INSTALL RACK GUIDE

(a) Install the rack guide and spring.

(b) Apply sealant to 2 or 3 threads of the rack guide spring cap.
Sealant:
Part No. 08833-00080, THREE BOND 1344, LOCTITE 242 or the equivalent

(c) Using a 24 mm hexagon wrench, temporarily install the spring cap.

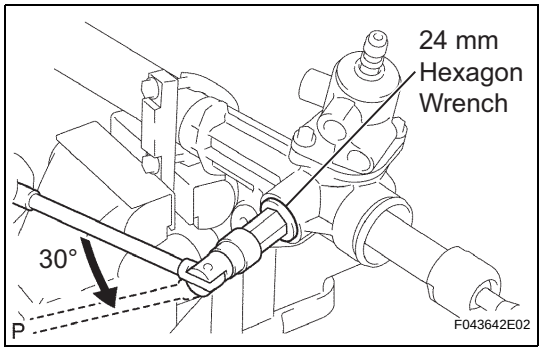

7. ADJUST TOTAL PRELOAD

(a) To prevent the steering rack teeth from damaging the lip of the oil seal, temporarily install the RH and LH rack ends.

(b) 2WD:
Using a 24 mm hexagon wrench, tighten the rack guide spring cap.
Torque: 25 N*m (250 kgf*cm, 18 ft.*lbf)

(c) Loosen the cap 30°.

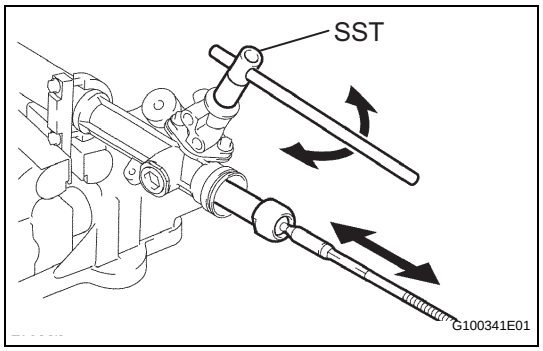

(d) Using SST, turn the control valve shaft right and left 1 or 2 times. The rack end will move in and out.
SST 09616-00011

(e) Using a 24 mm hexagon wrench, loosen the cap until the rack guide spring does not function.

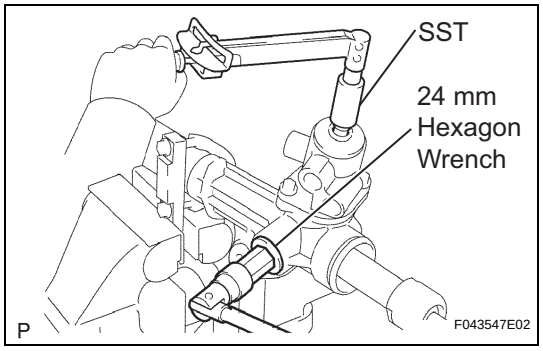

(f) Using SST, a torque wrench and 24 mm hexagon wrench, tighten the cap until the preload is within the specification.
SST 09616-00011
Torque: Preload (turning)
0.8 to 1.6 N*m (8.2 to 16.3 kgf*cm, 7.1 to 14.2 in.*lbf)
NOTICE:
Perform adjustments in the tightening direction of the spring cap.

PS

(g) Apply sealant to 2 or 3 threads of the lock nut.
Sealant:
Part No. 08833-00080, THREE BOND 1344, LOCTITE 242 or the equivalent.

(h) Temporarily install the lock nut.

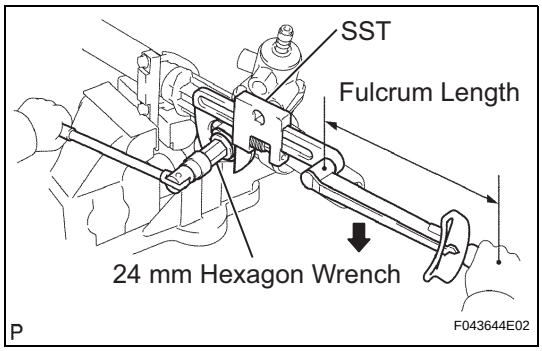

(i) Using a 24 mm hexagon wrench, hold the rack guide spring cap. Using SST, torque the nut.
SST 09922-10010
Torque: 69 N*m (704 kgf*cm, 51 ft.*lbf) for use without SST
65 N*m (660 kgf*cm, 48 ft.*lbf) for use with SST
NOTICE:
Rotate SST in the direction shown in the illustration.
HINT:
Use a torque wrench with a fulcrum length of 345 mm (13.58 in.).

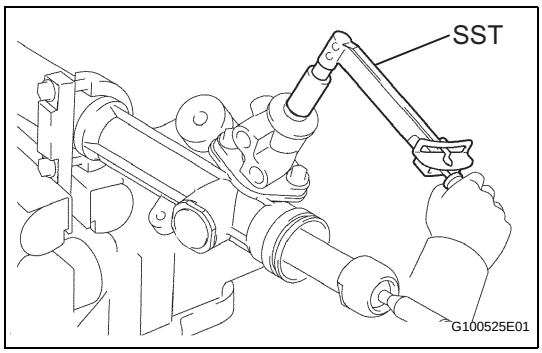

(j) Using SST, recheck the total preload.
Torque: Preload for (turning)
0.8 to 1.6 N*m (8.2 to 16.3 kgf*cm, 1.1 to 14.2 in.*lbf)
SST 09616-00011

(k) Remove the RH and LH rack ends.

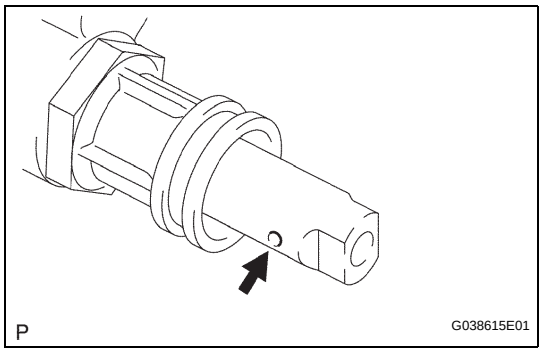

8. INSPECT POWER STEERING RACK

(a) Insert a wire 20 mm (0.79 in.) into the vent hole of the steering rack, and ensure that the vent hole is not clogged with grease.
NOTICE:
If the hole is clogged, the pressure inside the boot will change after it is assembled and the steering wheel is turned.

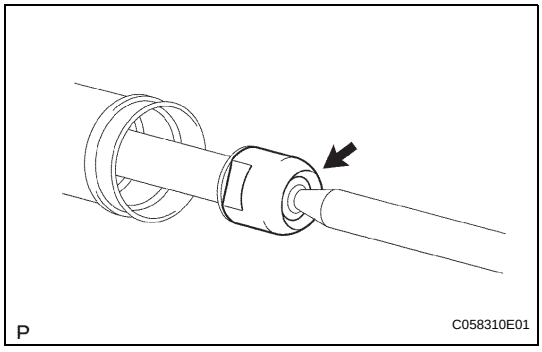

9. INSTALL STEERING RACK END SUB-ASSEMBLY

(a) Install 2 new claw washers onto the power steering rack while aligning the notch on the steering rack end with the claw.

(b) Temporarily install the 2 steering rack ends onto the power steering rack.

(c) Fill up the ball joint of the steering rack ends with MP grease.

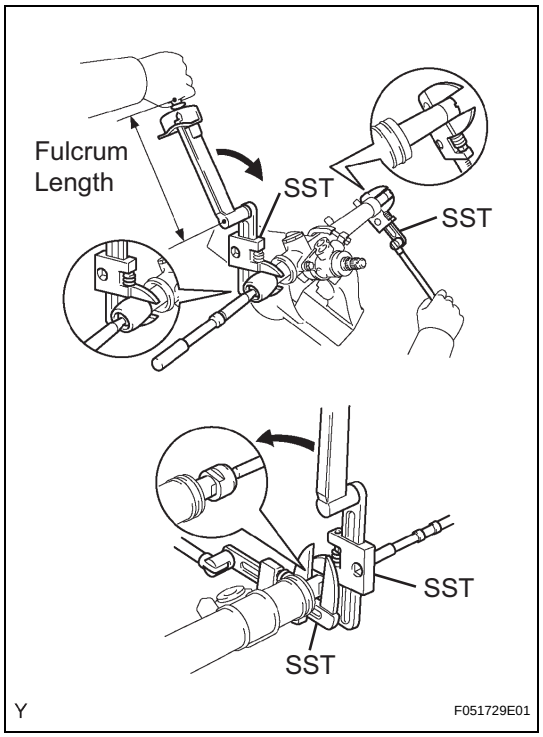

(d) Using SST, install the power steering rack end (LH side) onto the power steering rack.
SST 09922-10010
Torque: 103 N*m (1,050 kgf*cm, 76 ft.*lbf) for use without SST
98 N*m (1,000 kgf*cm, 72 ft.*lbf) for use with SST
NOTICE:
- **Rotate SST in the direction shown in the illustration.**
- **Use a torque wrench with a fulcrum length of 345 mm (13.58 in.).**

(e) Using SST and a wrench, install the power steering rack (LH side).
SST 09922-10010
Torque: 103 N*m (1,050 kgf*cm, 76 ft.*lbf) for use without SST
98 N*m (1,000 kgf*cm, 72 ft.*lbf) for use with SST
NOTICE:
- **Rotate SST in the direction shown in the illustration.**
- **Use a torque wrench with a fulcrum length of 345 mm (13.58 in.).**

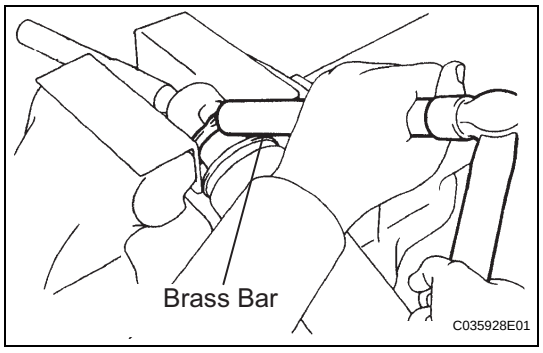

(f) Using a brass bar and hammer, stake the 2 claw washers (LH and RH sides).
NOTICE:
Do not strike the steering rack.

10. INSTALL STEERING RACK BOOT LH

(a) Install the boot.
NOTICE:
Be careful not to damage or twist the boot.

11. INSTALL STEERING RACK BOOT RH

HINT:
Use the same procedures described for the LH side.

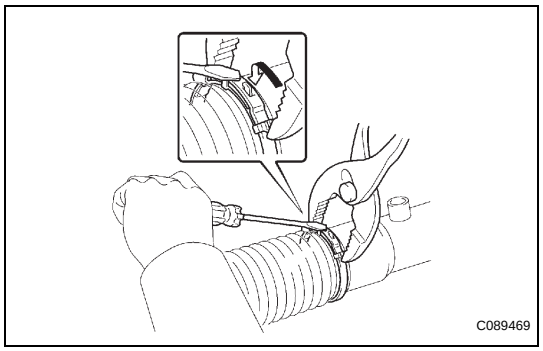

12. INSTALL STEERING RACK BOOT CLAMP LH

(a) Using the pliers and a screwdriver, install the rack boot clamp, as shown in the illustration.

13. INSTALL STEERING RACK BOOT CLAMP RH

HINT:
Use the same procedures described for the LH side.

14. INSTALL STEERING RACK BOOT CLIP LH

(a) Using pliers, install the clip.

15. INSTALL STEERING RACK BOOT CLIP RH

HINT:
Use the same procedures described for the LH side.

PS

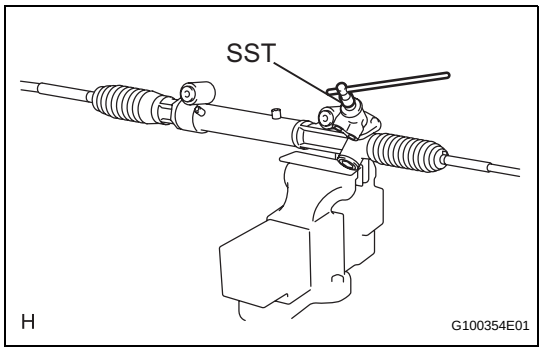

16. INSTALL POWER STEERING LINK

(a) Using SST, check that the rack boot stretches smoothly when the control valve shaft is being rotated.
SST 09616-00011

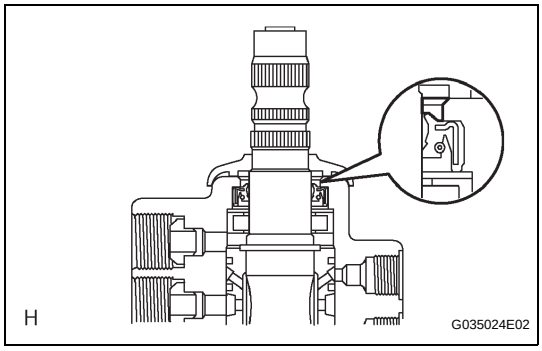

(b) Apply MP grease as shown in the illustration.
(c) Install the dust cover.

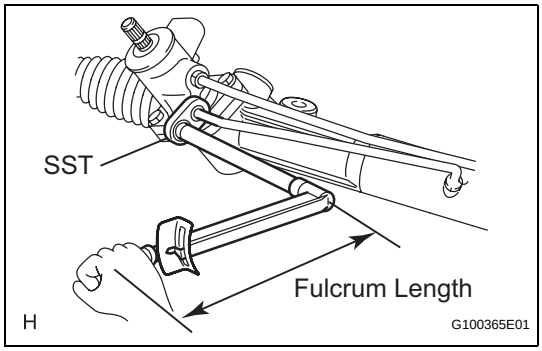

17. INSTALL STEERING TURN PRESSURE TUBE

(a) Apply power steering fluid to 2 new O-rings. Using SST, install the 2 O-rings and the LH turn pressure tube.
SST 09023-38201
Torque: 25 N*m (250 kgf*cm, 18 ft.*lbf) for use without SST
23 N*m (230 kgf*cm, 17 ft.*lbf) for use with SST
HINT:
- Use a torque wrench with a fulcrum length of 345 mm (13.58 in.).
- This torque value is effective when SST is parallel to the torque wrench.

(b) Apply power steering fluid to 2 new O-rings. Using SST, install the 2 O-rings and the RH turn pressure tube.
SST 09023-38201
Torque: 25 N*m (250 kgf*cm, 18 ft.*lbf) for use without SST
23 N*m (230 kgf*cm, 17 ft.*lbf) for use with SST
HINT:
- Use a torque wrench with a fulcrum length of 345 mm (13.58 in.).
- This torque value is effective when SST is parallel to the torque wrench.

PS

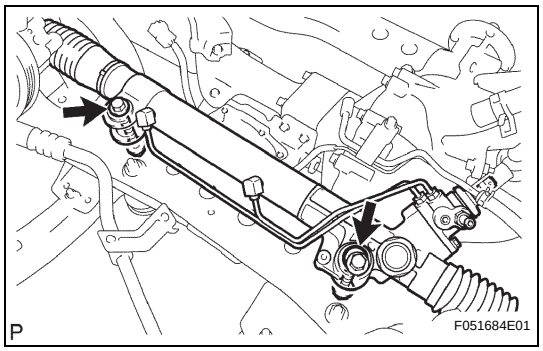

INSTALLATION

1. INSTALL POWER STEERING LINK

(a) Install the power steering link with the 2 bolts and 2 nuts.

Torque: 100 N*m (1,020 kgf*cm, 74 ft.*lbf)

NOTICE:

Never turn the nut since it has a detent. Be sure to turn only the bolt.

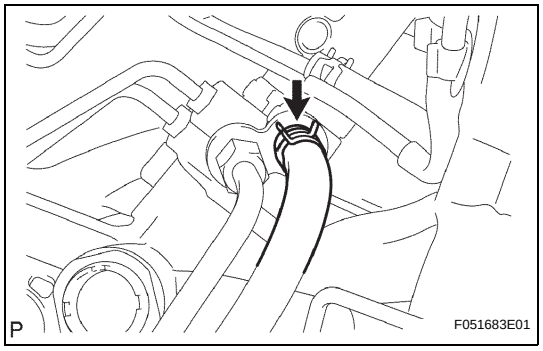

2. INSTALL PRESSURE FEED TUBE ASSEMBLY

(a) Connect the return hose with the clip.

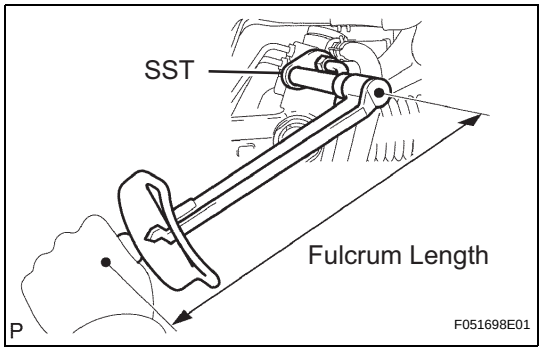

(b) Using SST, tighten the flare nut and connect the pressure feed tube.

SST 09023-12701

Torque: for use without SST

44 N*m (449 kgf*cm, 33 ft.*lbf)

for use with SST

42 N*m (420 kgf*cm, 31 ft.*lbf)

HINT:

- Use a torque wrench with a fulcrum length of 300 mm (11.81 in.).
- This torque value is effective when SST is parallel to a torque wrench.

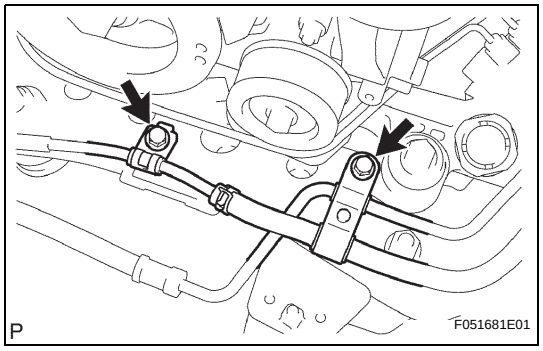

(c) Install the tube support brackets with the 2 bolts.

Torque: 28 N*m (286 kgf*cm, 21 ft.*lbf)

3. INSTALL TIE ROD END SUB-ASSEMBLY LH

(a) Install the tie rod end onto the steering knuckle arm.

(b) Install the nut.

Torque: 91 N*m (928 kgf*cm, 67 ft.*lbf)

(c) Install a new cotter pin.

4. INSTALL TIE ROD END SUB-ASSEMBLY RH

HINT:

The installation procedure for the RH side is the same as that for the LH side.

PS

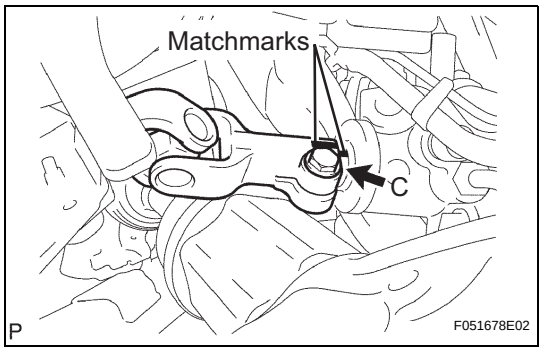

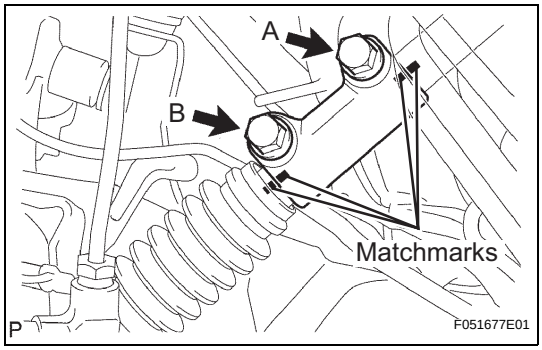

PS

5. **INSTALL NO.2 STEERING INTERMEDIATE SHAFT SUB-ASSEMBLY**
   (a) Align the matchmarks on the No. 2 steering intermediate shaft and power steering link.
   (b) Install the No. 2 steering intermediate shaft onto the power steering link with bolt C.
   Torque: 36 N*m (367 kgf*cm, 27 ft.*lbf)
   (c) Align the matchmarks on the steering intermediate shaft and steering sliding yoke.
   (d) Install the steering sliding yoke onto the steering intermediate shaft and slide it upward.
   (e) Align the matchmarks on the steering sliding yoke and No. 2 steering intermediate shaft.
   (f) Install the steering sliding yoke with bolts A and B.
   Torque: 36 N*m (367 kgf*cm, 27 ft.*lbf)
6. **INSTALL NO. 3 FRAME CROSSMEMBER SUB-ASSEMBLY (See page MT-12)**
7. **INSTALL FRONT SUSPENSION MEMBER BRACKET LH (See page AT-183)**
8. **INSTALL FRONT SUSPENSION MEMBER BRACKET (See page AT-183)**
9. **INSTALL PROPELLER SHAFT ASSEMBLY (See page PR-14)**
10. **INSTALL FRONT PROPELLER SHAFT ASSEMBLY (See page PR-6)**
11. **INSTALL PROPELLER SHAFT HEAT INSULATOR (See page AT-185)**
12. **INSTALL FRONT EXHAUST PIPE ASSEMBLY (See page EX-4)**
13. **INSTALL NO. 2 EXHAUST FRONT PIPE ASSEMBLY (See page EX-5)**
14. **INSTALL FRONT WHEELS**
    Torque: 113 N*m (1,152 kgf*cm, 83 ft.*lbf)
15. **PLACE FRONT WHEELS FACING STRAIGHT AHEAD**
16. **INSPECT STEERING WHEEL CENTER POINT**
17. **CONNECT CABLE TO NEGATIVE BATTERY TERMINAL**
    Torque: 3.9 N*m (40 kgf*cm, 35 in.*lbf)
18. **ADD POWER STEERING FLUID**
19. **BLEED POWER STEERING FLUID (See page PS-2)**
20. **CHECK FOR POWER STEERING FLUID LEAKAGE**
21. **CHECK FOR EXHAUST GAS LEAKAGE**

22. **INSPECT AND ADJUST FRONT WHEEL ALIGNMENT**
(See page SP-2)

23. **INSTALL REAR ENGINE UNDER COVER ASSEMBLY**
(a) Install the rear engine under cover with the 4 bolts.
Torque: 29 N*m (296 kgf*cm, 21 ft.*lbf)

24. **INSTALL NO. 1 ENGINE UNDER COVER SUB-ASSEMBLY (See page EM-7)**

1GR-FE ENGINE CONTROL SYSTEM

RECOMMENDED TOOLS

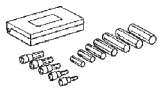	09040-00011	Hexagon Wrench Set	
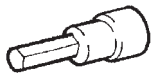	(09043-20080)	Socket Hexagon Wrench 8	
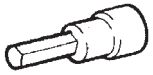	(09043-20100)	Socket Hexagon Wrench 10	
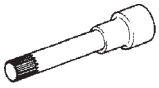	09043-50100	Bi-hexagon Wrench 10 mm	
	09082-00040	TOYOTA Electrical Tester	
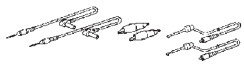	(09083-00150)	Test Lead Set	

PP

EQUIPMENT

Bar	
Ohmmeter	
Torque wrench	
Vernier caliper	
Voltmeter	
Dial indicator	
Wooden block	
Adhesive 1344	
Seal Packing 1282B	
Seal Packing Black	

1GR-FE ENGINE MECHANICAL

RECOMMENDED TOOLS

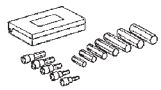	09040-00011	Hexagon Wrench Set	
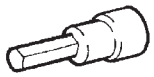	(09043-20080)	Socket Hexagon Wrench 8	
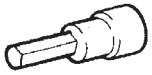	(09043-20100)	Socket Hexagon Wrench 10	
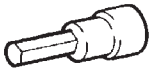	(09043-20120)	Socket Hexagon Wrench 12	
	(09043-30140)	Straight Hexagon Wrench 14	
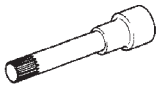	09043-50100	Bi-hexagon Wrench 10 mm	

EQUIPMENT

Abrasive compound	
Brush	
Caliper gauge	
Carbide cutter	
V-block	
Pin hole grinder	
Piston ring compressor	
Piston ring expander	
CO/HC meter	
Compression gauge	
Connecting rod aligner	
Cylinder gauge	
Dial indicator	
Dye penetrant	
Pin punch	
Spring scale	
Feeler gauge	
Micrometer	
Precision straight edge	
Press	
Reamer	
Ridge reamer	
Soft brush	
Solvent	
Radiator cap tester	
Steel square	
Grinder	
Torque wrench	
"Torx" socket wrench	
Plastic hammer	
Valve guide bushing brush	
Vernier caliper	
Wire brush	
Dial indicator with magnetic base	
Deep socket wrench	
Magnetic finger	
Scraper	
Wooden block	
Chain block	
Spring tester	
Plastigage	
Heater	
Timing light	
Bar	
Pin hole grinder	
Seal Packing Black	
Seal Packing 1282B	
Adhesive 1324	

1GR-FE FUEL

RECOMMENDED TOOLS

PP

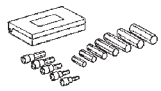	09040-00011	Hexagon Wrench Set	
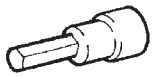	(09043-20080)	Socket Hexagon Wrench 8	
	09082-00040	TOYOTA Electrical Tester	
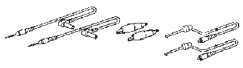	(09083-00150)	Test Lead Set	

EQUIPMENT

Stopwatch	
Measuring flask	
Radiator cap tester	
Torque wrench	
Clip	

1GR-FE EMISSION CONTROL

RECOMMENDED TOOLS

	09082-00040	TOYOTA Electrical Tester	
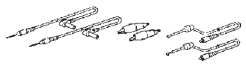	(09083-00150)	Test Lead Set	

EQUIPMENT

Ohmmeter	
Torque wrench	
Hand-held vacuum pump	
Adhesive 1344	

1GR-FE INTAKE

RECOMMENDED TOOLS

	09082-00040	TOYOTA Electrical Tester	
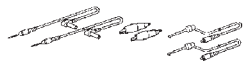	(09083-00150)	Test Lead Set	

PP

EQUIPMENT

Service Wire Harness	
Ohmmeter	
Hand-held Vacuum Pump	
3-way Connector	
Vacuum Gauge	

1GR-FE EXHAUST

EQUIPMENT

Torque wrench	
Vernier calipers	
Wooden block	
plastic-faced Hammer	

1GR-FE COOLING

EQUIPMENT

Torque wrench	
Radiator cap tester	
Thermometer	
Heater	
Vernier calipers	

COOLANT

Item		Capacity	Classification
Engine coolant	Manual transmission	9.4 liters (9.9 US qts, 8.3 lmp. qts)	"TOYOTA SUPER LONG LIFE Antifreeze Coolant" or equivalent
	Automatic transmission	9.8 liters (10.4 US qts, 8.6 lmp. qts)	

1GR-FE LUBRICATION

RECOMMENDED TOOLS

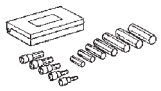	09040-00011	Hexagon Wrench Set	
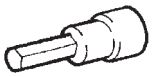	(09043-20080)	Socket Hexagon Wrench 8	

EQUIPMENT

Feeler gauge	
Precision straight edge	
Torque wrench	
Vernier caliper	
Dial indicator with magnetic base	
Wooden block	
Seal Packing Black	
Seal Packing 1282B	
Adhesive 1344	

LUBRICANT

Item	Capacity	Classification
Oil grade	-	ILSAC multigrade engine oil, SAE 5W-30
with Oil filter change	5.2 liter (5.5 US qts, 4.6 lmp. qts)	-
without Oil filter change	4.9 liter (5.2 US qts, 4.3 lmp. qts)	-
Dry fill	6.0 liter (6.3 US qts, 5.3lmp. qts)	-

1GR-FE IGNITION

RECOMMENDED TOOLS

	09082-00040	TOYOTA Electrical Tester	
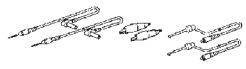	(09083-00150)	Test Lead Set	
	09200-00010	Engine Adjust Kit	
	(09857-00031)	Spark Plug Gap Gauge	

EQUIPMENT

Ohmmeter	
Torque wrench	
Spark plug cleaner	

1GR-FE STARTING

RECOMMENDED TOOLS

	09082-00040	TOYOTA Electrical Tester	
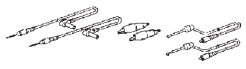	(09083-00150)	Test Lead Set	

EQUIPMENT

Service wire harness	
V-block	
Ammeter	
Dial indicator with magnetic base	
Ohmmeter	
Torque wrench	
Vernier calipers	
Magnetic finger	

1GR-FE CHARGING

RECOMMENDED TOOLS

	09082-00040	TOYOTA Electrical Tester	
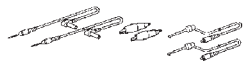	(09083-00150)	Test Lead Set	

EQUIPMENT

Service wire harness	
Ammeter	
Ohmmeter	
Torque wrench	
Vernier calipers	

A750E AUTOMATIC TRANSMISSION

SST

	09023-12701	Union Nut Wrench 17mm	
	09223-15020	Oil Seal & Bearing Replacer	
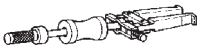	09308-00010	Oil Seal Puller	
	09320-89010	Transfer Clutch Spring Compressor	
	09325-40010	Transmission Oil Plug	
	09350-30020	TOYOTA Automatic Transmission Tool Set	
	(09350-07020)	Oil Pump Puller	
	(09350-07040)	No.2 Piston Spring Compressor	
	(09350-07050)	No.3 Piston Spring Compressor	
	(09350-07060)	No.1 Snap Ring Expander	
	(09350-07070)	No.2 Snap Ring Expander	

PP

PP

	(09350-07080)	Brake Reaction Sleeve Puller	
	(09350-07090)	Brake No.1 Piston Puller	
	(09350-07110)	Oil Seal Replacer	
	(09351-32140)	Oil Seal Replacer	
	09350-32014	TOYOTA Automatic Transmission Tool Set	
	(09351-32020)	Stator Stopper	
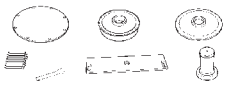	09351-40010	Tool Set, TOYOTA Automatic Transmission	
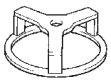	09387-00070	First & Reverse Brake Wrench	
	09710-30050	Suspension Arm Bushing Replacer	
	09843-18040	Diagnosis Check Wire No.2	
	09950-70010	Handle Set	
	(09951-07100)	Handle 100	

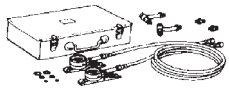	09992-00095	Automatic Transmission Oil Pressure Gauge Set	
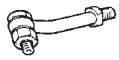	(09992-00231)	Adaptor C	
	(09992-00271)	Gauge Assy	

RECOMMENDED TOOLS

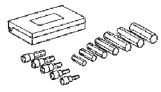	09040-00011	Hexagon Wrench Set	
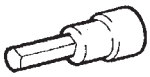	(09043-20060)	Socket Hexagon Wrench 6	
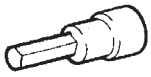	(09043-20100)	Socket Hexagon Wrench 10	
	09082-00040	TOYOTA Electrical Tester	
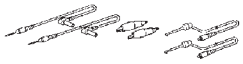	(09083-00150)	Test Lead Set	

PP

EQUIPMENT

Feeler gauge	
Cylinder gauge	
Vernier calipers	
Dial indicator	
Micrometer	
Straight edge	
Torque wrench	
Angle gauge	
V-block	
Dial indicator or dial indicator with magnetic base	

LUBRICANT

Item	Capacity	Classification
Automatic transmission fluid: (Dry fill)	10.4 liter (11 US qts, 9.2 lmp. qts)	ATF WS
Automatic transmission fluid: (Drain and refill)	3.0 liter (3.2 US qts, 2.6 lmp. qts)	ATF WS

A750F AUTOMATIC TRANSMISSION

SST

	09023-12701	Union Nut Wrench 17mm	
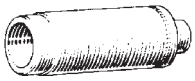	09226-10010	Crankshaft Front & Rear Bearing Replacer	
	09320-89010	Transfer Clutch Spring Compressor	
	09350-30020	TOYOTA Automatic Transmission Tool Set	
	(09350-07020)	Oil Pump Puller	
	(09350-07040)	No.2 Piston Spring Compressor	
	(09350-07050)	No.3 Piston Spring Compressor	
	(09350-07060)	No.1 Snap Ring Expander	
	(09350-07070)	No.2 Snap Ring Expander	
	(09350-07080)	Brake Reaction Sleeve Puller	
	(09350-07090)	Brake No.1 Piston Puller	

	(09350-07110)	Oil Seal Replacer	
	(09351-32140)	Oil Seal Replacer	
	09350-32014	TOYOTA Automatic Transmission Tool Set	
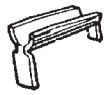	(09351-32020)	Stator Stopper	
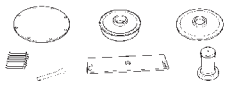	09351-40010	Tool Set, TOYOTA Automatic Transmission	
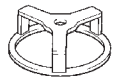	09387-00070	First & Reverse Brake Wrench	
	09843-18040	Diagnosis Check Wire No.2	
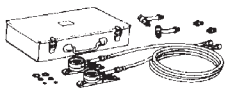	09992-00095	Automatic Transmission Oil Pressure Gauge Set	
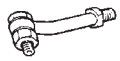	(09992-00231)	Adaptor C	
	(09992-00271)	Gauge Assy	

RECOMMENDED TOOLS

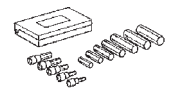	09040-00011	Hexagon Wrench Set	
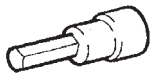	(09043-20060)	Socket Hexagon Wrench 6	
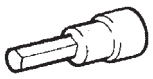	(09043-20100)	Socket Hexagon Wrench 10	
	09082-00040	TOYOTA Electrical Tester	
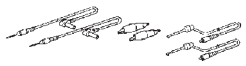	(09083-00150)	Test Lead Set	

EQUIPMENT

Feeler gauge	
Cylinder gauge	
Vernier calipers	
Dial indicator	
Micrometer	
Straight edge	
Torque wrench	
Angle gauge	
V-block	
Dial indicator or dial indicator with magnetic base	

LUBRICANT

Item	Capacity	Classification
Automatic transmission fluid: (Dry fill)	10.4 litter (11 US qts, 9.2 lmp. qts)	ATF WS
Automatic transmission fluid: (Drain and refill)	3.0 litter (3.2 US qts, 2.6 lmp. qts)	ATF WS

CLUTCH

SST

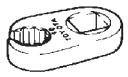	09023-00101	Union Nut Wrench 10 mm	
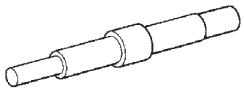	09301-00220	Clutch Guide Tool	
	09333-00013	Universal Joint Bearing Remover & Replacer	

RECOMMENDED TOOLS

	09082-00040	TOYOTA Electrical Tester	
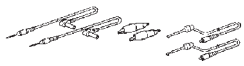	(09083-00150)	Test Lead Set	

EQUIPMENT

Vernier calipers	
Dial indicator with magnetic base	
Torque wrench	

LUBRICANT

Item	Capacity	Classification
Brake fluid	-	SAE J1703 or FMVSS NO. 116 DOT 3

RA61F MANUAL TRANSMISSION

SST

	09023-00101	Union Nut Wrench 10 mm	
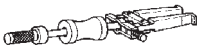	09308-00010	Oil Seal Puller	
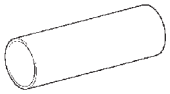	09308-14010	Replacer Pipe A	
	09309-37010	Transmission Bearing Replacer	
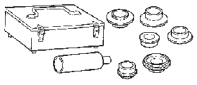	09316-60011	Transmission & Transfer Bearing Replacer	
	(09316-00011)	Replacer Pipe	
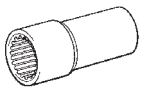	09556-16030	Differential Drive Pinion Holding Tool 28	
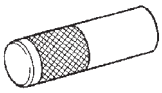	09608-06041	Front Hub Inner Bearing Cone Replacer	
	09817-16011	Back-up Light Switch Tool	
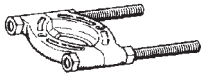	09950-00020	Bearing Remover	
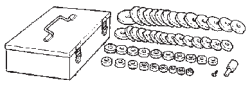	09950-60010	Replacer Set	

	(09951-00300)	Replacer 30	
	(09951-00320)	Replacer 32	
	(09951-00470)	Replacer 47	
	(09951-00510)	Replacer 51	
	(09951-00540)	Replacer 54	
	(09951-00650)	Replacer 65	
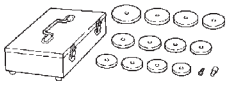	09950-60020	Replacer Set No.2	
	(09951-00790)	Replacer 79	
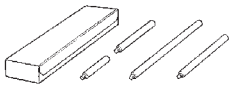	09950-70010	Handle Set	
	(09951-07100)	Handle 100	
	(09951-07200)	Handle 200	
	(09951-07360)	Handle 360	

RECOMMENDED TOOLS

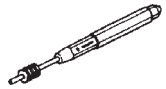	09031-00040	Pin Punch .	
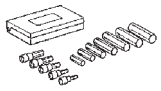	09040-00011	Hexagon Wrench Set	
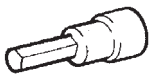	(09043-20100)	Socket Hexagon Wrench 10	
	(09043-30240)	Straight Hexagon Wrench 24	
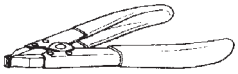	09905-00012	Snap Ring No.1 Expander	
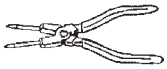	09905-00013	Snap Ring Pliers	

PP

EQUIPMENT

Cylinder gauge	
Dial indicator	
Feller gauge	
Micrometer	
Torque wrench	
Vernier calipers	
Press	
V-block	

LUBRICANT

Item	Capacity	Classification
Manual transmission oil	1.8 liters (1.9 US qts, 1.6 lmp. qts)	API GL-4 or GL-5 SAE 75W-90

VF2A TRANSFER

SST

	09223-15020	Oil Seal & Bearing Replacer	
	09223-46011	Crankshaft Front Oil Seal Replacer	
	09308-00010	Oil Seal Puller	
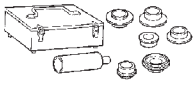	09316-60011	Transmission & Transfer Bearing Replacer	
	(09316-00011)	Replacer Pipe	
	(09316-00031)	Replacer B	
	(09316-00071)	Replacer F	
	09330-00021	Companion Flange Holding Tool	
	09515-30010	Rear Wheel Bearing Replacer	
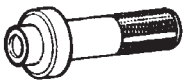	09554-30011	Differential Oil Seal Replacer	
	09555-55010	Differential Drive Pinion Bearing Replacer	

	09612-65014	Steering Worm Bearing Puller	
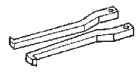	(09612-01030)	Claw C	
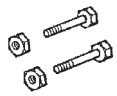	(09612-01050)	Hanger Pin with Nut	
	09631-32020	Seal Ring Tool	
	09950-40011	Puller B Set	
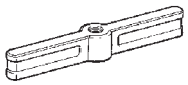	(09951-04020)	Hanger 200	
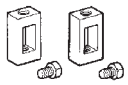	(09952-04010)	Slide Arm	
	(09953-04030)	Center Bolt 200	
	(09954-04010)	Arm 25	
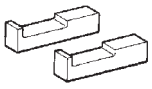	(09955-04051)	Claw No.5	
	(09957-04010)	Attachment	
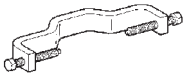	(09958-04011)	Holder	

PP

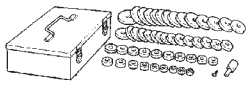	09950-60010	Replacer Set	
	(09951-00320)	Replacer 32	
	(09951-00570)	Replacer 57	
	(09951-00590)	Replacer 59	
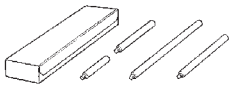	09950-70010	Handle Set	
	(09951-00710)	Replacer 71	
	(09951-07100)	Handle 100	

EQUIPMENT

Dial indicator with magnetic base	
Micrometer	
Plastic-faced hammer	
Torque wrench	
Vernier caliper	

LUBRICANT

Item	Capacity	Classification
Transfer oil	1.0 liters (1.1 US qts, 0.9 lmp. qts)	API GL-3 SAE 75W-90

VF4B TRANSFER

SST

	09223-15020	Oil Seal & Bearing Replacer	
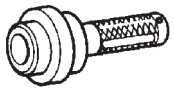	09223-46011	Crankshaft Front Oil Seal Replacer	
	09304-12012	Input Shaft Front Bearing Replacer	
	09308-00010	Oil Seal Puller	
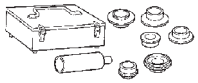	09316-60011	Transmission & Transfer Bearing Replacer	
	(09316-00011)	Replacer Pipe	
	(09316-00031)	Replacer B	
	(09316-00071)	Replacer F	
	09330-00021	Companion Flange Holding Tool	
	09515-30010	Rear Wheel Bearing Replacer	
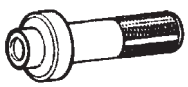	09554-30011	Differential Oil Seal Replacer	

PP

	09555-55010	Differential Drive Pinion Bearing Replacer	
	09612-65014	Steering Worm Bearing Puller	
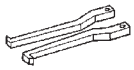	(09612-01030)	Claw C	
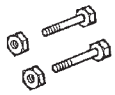	(09612-01050)	Hanger Pin with Nut	
	09631-32020	Seal Ring Tool	
	09950-40011	Puller B Set	
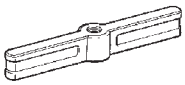	(09951-04020)	Hanger 200	
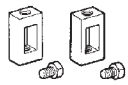	(09952-04010)	Slide Arm	
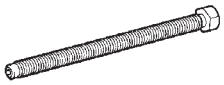	(09953-04030)	Center Bolt 200	
	(09954-04010)	Arm 25	
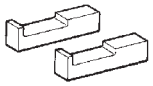	(09955-04051)	Claw No.5	
	(09957-04010)	Attachment	

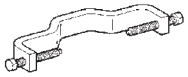	(09958-04011)	Holder	
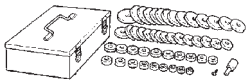	09950-60010	Replacer Set	
	(09951-00320)	Replacer 32	
	(09951-00570)	Replacer 57	
	(09951-00590)	Replacer 59	
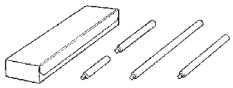	09950-70010	Handle Set	
	(09951-07100)	Handle 100	

EQUIPMENT

Dial indicator with magnetic base	
Micrometer	
Plastic-faced hammer	
Torque wrench	
Vernier caliper	

LUBRICANT

Item	Capacity	Classification
Transfer oil	1.4 liters (1.5 US qts, 1.3 Imp. qts)	API GL-5 SAE 75W-90

PROPELLER SHAFT

SST

	09325-40010	Transmission Oil Plug	
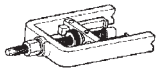	09332-25010	Propeller Shaft Center Bearing Replacer	

EQUIPMENT

Dial Indicator with magnetic base	
Torque wrench	

DRIVE SHAFT

SST

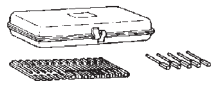	09240-00020	Wire Gauge Set	
	09520-01010	Drive Shaft Remover Attachment	
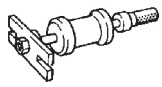	09520-24010	Differential Side Gear Shaft Puller	
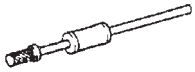	(09520-32040)	Shocker Set	
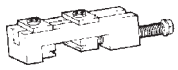	09521-24010	Rear Axle Shaft Puller	
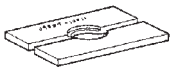	09527-10011	Rear Axle Shaft Bearing Remover	
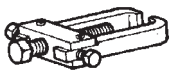	09628-62011	Boll Joint Puller	
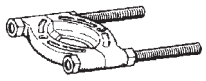	09950-00020	Bearing Remover	

RECOMMENDED TOOLS

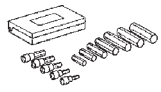	09040-00011	Hexagon Wrench Set	
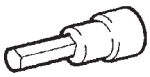	(09043-20050)	Socket Hexagon Wrench 5	
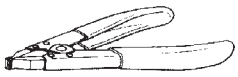	09905-00012	Snap Ring No.1 Expander	

EQUIPMENT

Torque wrench	

LUBRICANT

Item	Capacity
Front drive shaft outboard joint grease	260 to 270 g (9.2 to 9.5 oz.)
Front drive shaft inboard joint grease	231 to 241 g (8.1 to 8.5 oz.)

DIFFERENTIAL

SST

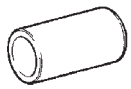	09223-00010	Cover & Seal Replacer	
	09223-15020	Oil Seal & Bearing Replacer	
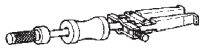	09308-00010	Oil Seal Puller	
	09308-10010	Oil Seal Puller	
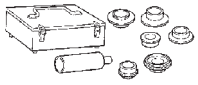	09316-60011	Transmission & Transfer Bearing Replacer	
	(09316-00011)	Replacer Pipe	
	(09316-00021)	Replacer A	
	(09316-00041)	Replacer C	
	09330-00021	Companion Flange Holding Tool	
	(09330-00030)	Pin	
	09350-20015	TOYOTA Automatic Transmission Tool Set	

PP

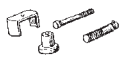	(09369-20040)	Piston Spring Compressor Set	
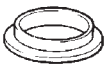	09502-12010	Differential Bearing Replacer	
	09504-00011	Differential Side Bearing Adjusting Nut Wrench	
	09506-30012	Differential Drive Pinion Rear Bearing Cone Replacer	
	09550-00032	Replacer	
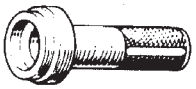	09554-22010	Differential Oil Seal Replacer	
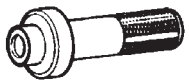	09554-30011	Differential Oil Seal Replacer	
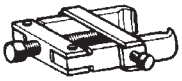	09556-22010	Drive Pinion Front Bearing Remover	
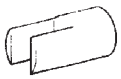	09564-32011	Differential Preload Adaptor	
	09608-32010	Steering Knuckle Oil Seal Replacer	
	09612-65014	Steering Worm Bearing Puller	
	(09612-01020)	Claw B	

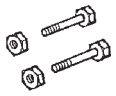	(09612-01050)	Hanger Pin with Nut	
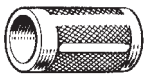	09636-20010	Upper Ball Joint Dust Cover Replacer	
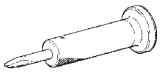	09930-00010	Drive Shaft Nut Chisel	
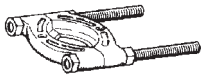	09950-00020	Bearing Remover	
	(09951-00680)	Replacer 68	
	(09951-00890)	Replacer 89	
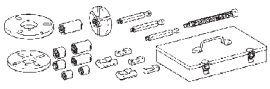	09950-30012	Puller A Set	
	(09951-03010)	Upper Plate	
	(09953-03010)	Center Bolt	
	(09954-03010)	Arm	
	(09955-03030)	Lower Plate 130	
	(09956-03020)	Adapter 18	

PP

PP

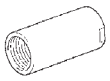	(09956-03030)	Adaptor 20	
	09950-40011	Puller B Set	
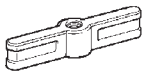	(09951-04010)	Hanger 150	
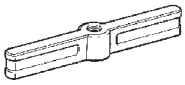	(09951-04020)	Hanger 200	
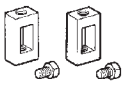	(09952-04010)	Slide Arm	
	(09953-04020)	Center Bolt 150	
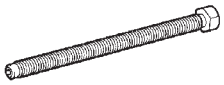	(09953-04030)	Center Bolt 200	
	(09954-04010)	Arm 25	
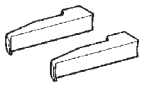	(09955-04011)	Claw No.1	
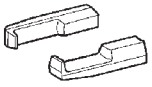	(09955-04061)	Claw No.6	
	(09957-04010)	Attachment	
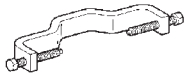	(09958-04011)	Holder	

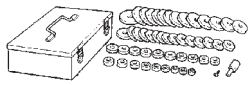	09950-60010	Replacer Set	
	(09951-00360)	Replacer 36	
	(09951-00380)	Replacer 38	
	(09951-00430)	Replacer 43	
	(09951-00470)	Replacer 47	
	(09951-00480)	Replacer 48	
	(09951-00510)	Replacer 51	
	(09951-00520)	Replacer 52	
	(09951-00550)	Replacer 55	
	(09951-00610)	Replacer 61	
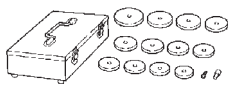	09950-60020	Replacer Set No.2	
	(09951-00680)	Replacer 68	

PP

	(09951-00810)	Replacer 81	
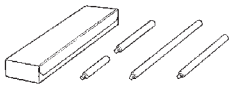	09950-70010	Handle Set	
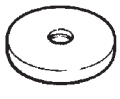	(09951-00560)	Replacer 56	
	(09951-00570)	Replacer 57	
	(09951-07100)	Handle 100	
	(09951-07150)	Handle 150	
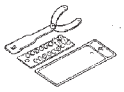	09960-10010	Variable Pin Wrench Set	
	(09962-01000)	Variable Pin Wrench Arm Assembly	
	(09963-00700)	Pin 7	

RECOMMENDED TOOLS

	09011-12301	Socket Wrench 30 mm	
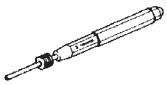	09031-00030	Pin Punch	
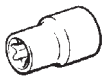	09044-00010	Torx Socket E14	
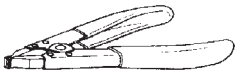	09905-00012	Snap Ring No.1 Expander	
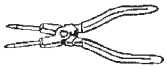	09905-00013	Snap Ring Pliers	

EQUIPMENT

Brass bar	
Chisel	
Dial indicator	
Feeler gauge	
Hammer	
Micrometer	
Needle nose pliers	
Plastic hammer	
Press	
Prussian blue	
Screwdriver	
Tape	
Torque wrench	
Vernier calipers	

LUBRICANT

Front differential

Item	Capacity	Oil grade	Classification
w/ A.D.D.	1.45 to 1.55 liters (1.53 to 1.63 US qts, 1.27 to 1.36 Imp. qts.)	Hypoid gear oil APL GL-4 and GL-5	Above-18°C (0°F): SAE 90) Below-18°C (0°F): SAE 75W-90
w/o A.D.D.	1.35 to 1.45 liters (1.42 to 1.53 US qts, 1.18 to 1.27 Imp. qts.)	Hypoid gear oil APL GL-4 and GL-5	Above-18°C (0°F): SAE 90) Below-18°C (0°F): SAE 85W-90

Rear differential

Item	Capacity	Oil grade	Classification
w/ Differential lock	2.85 to 2.95 liters (3.01 to 3.12 US qts, 2.51 to 2.60 Imp. qts.)	Hypoid gear oil APL GL-5	Above-18°C (0°F): SAE 90) Below-18°C (0°F): SAE 85W-90
w/o Differential lock	2.95 to 3.05 liters (3.12 to 3.22 US qts, 2.60 to 2.68 Imp. qts.)	Hypoid gear oil APL GL-5	Above-18°C (0°F): SAE 90) Below-18°C (0°F): SAE 85W-90

AXLE

SST

	09023-00101	Union Nut Wrench 10 mm	
	09308-00010	Oil Seal Puller	
	09318-12010	Transfer Bearing Adjusting Nut Wrench	
	09521-25011	Rear Axle Shaft Puller	
	09521-25021	Rear Axle Shaft Puller Attachment	
	09527-17011	Rear Axle Shaft Bearing Remover	
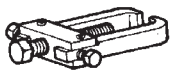	09628-62011	Boll Joint Puller	
	09631-12090	Seal Ring Tool	
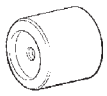	09649-17010	Steering Knuckle Tool	
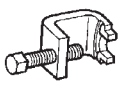	09650-17011	Hub Bolt Remover	
	09710-30021	Suspension Bushing Tool Set	

	(09710-03051)	Bushing Replacer	
	09726-40010	Lower Control Shaft Bearing Replacer	
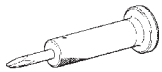	09930-00010	Drive Shaft Nut Chisel	
	09950-40011	Puller B Set	
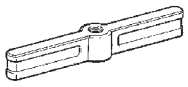	(09951-04020)	Hanger 200	
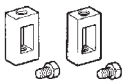	(09952-04010)	Slide Arm	
	(09953-04020)	Center Bolt 150	
	(09954-04010)	Arm 25	
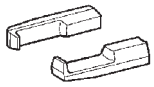	(09955-04061)	Claw No.6	
	(09957-04010)	Attachment	
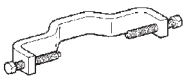	(09958-04011)	Holder	
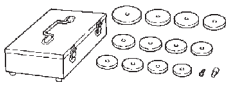	09950-60020	Replacer Set No.2	

PP

	(09951-00770)	Replacer 77	
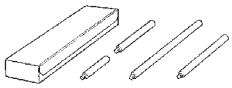	09950-70010	Handle Set	
	(09951-07100)	Handle 100	
	(09951-07150)	Handle 150	
	09951-01000	Replacer 100	
	09951-01100	Replacer 110	

PP

RECOMMENDED TOOLS

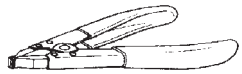	09905-00012	Snap Ring No.1 Expander	

EQUIPMENT

Dial indicator with magnetic base	
Torque wrench	

SUSPENSION

SST

	09023-00101	Union Nut Wrench 10 mm	
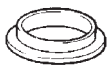	09502-12010	Differential Bearing Replacer	
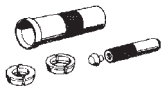	09613-26010	Steering Worm Bearing Cone Remover	
	09628-00011	Ball Joint Puller	
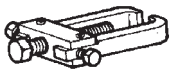	09628-62011	Boll Joint Puller	
	09631-12090	Seal Ring Tool	
	09631-32020	Seal Ring Tool	
	09710-22021	Front Suspension Bushing Tool Set	
	(09710-01031)	Upper Arm Bushing Replacer	
	(09710-01071)	Lower Arm Bushing Remover	
	(09710-01081)	Lower Arm Bushing Replacer	

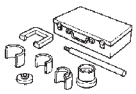	09710-26010	Rear Suspension Bushing Tool Set	
	(09710-05061)	Replacer	
	09727-00060	Arm Set C	
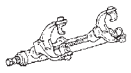	09727-30021	Coil Spring Compressor	
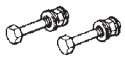	(09727-00010)	Bolt Set	
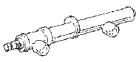	(09727-00031)	Compressor	
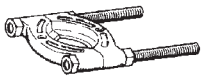	09950-00020	Bearing Remover	
	09950-40011	Puller B Set	
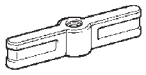	(09951-04010)	Hanger 150	
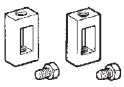	(09952-04010)	Slide Arm	
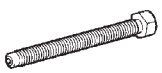	(09953-04020)	Center Bolt 150	
	(09954-04010)	Arm 25	

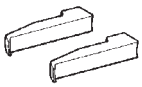	(09955-04011)	Claw No.1	
	(09957-04010)	Attachment	
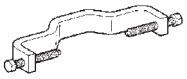	(09958-04011)	Holder	
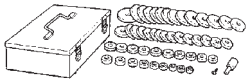	09950-60010	Replacer Set	
	(09951-00470)	Replacer 47	
	(09951-00520)	Replacer 52	

PP

RECOMMENDED TOOLS

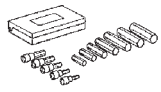	09040-00011	Hexagon Wrench Set	
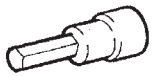	(09043-20060)	Socket Hexagon Wrench 6	

EQUIPMENT

Alignment tester	
Angle gauge	
Camber-caster-kingpin gauge	
Tire pressure gauge	
Toe-in gauge	
Wheel balancer	
Dial indicator with magnetic base	
Torque wrench	
Drill	

TIRE AND WHEEL

EQUIPMENT

Dial indicator with magnetic base	
Wheel balancer	

BRAKE CONTROL

RECOMMENDED TOOLS

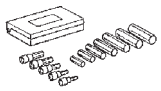	09040-00011	Hexagon Wrench Set	
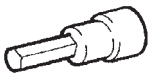	(09043-20050)	Socket Hexagon Wrench 5	
	09082-00040	TOYOTA Electrical Tester	
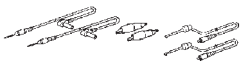	(09083-00150)	Test Lead Set	

EQUIPMENT

Torque wrench	

BRAKE

SST

	09023-00101	Union Nut Wrench 10 mm	
	09709-29018	LSPV Gauge Set	

RECOMMENDED TOOLS

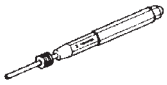	09031-00030	Pin Punch	
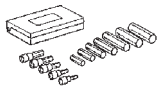	09040-00011	Hexagon Wrench Set	
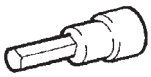	(09043-20050)	Socket Hexagon Wrench 5	

EQUIPMENT

Torque wrench	
Ruler	
Micrometer	
Dial indicator with magnetic base	

LUBRICANT

Item	Capacity	Classification
Brake fluid	-	SAE J1703 or FMVSS No. 116 DOT3

PARKING BRAKE

EQUIPMENT

Torque wrench	
Brake drum gauge	
Ruler	
Feeler gauge	
Ohmmeter	

STEERING COLUMN

SST

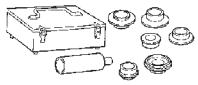	09316-60011	Transmission & Transfer Bearing Replacer	
	(09316-00051)	Replacer D	
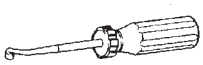	09921-00010	Spring Tension Tool	
	09950-40011	Puller B Set	
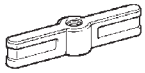	(09951-04010)	Hanger 150	
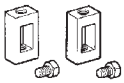	(09952-04010)	Slide Arm	
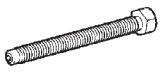	(09953-04020)	Center Bolt 150	
	(09954-04010)	Arm 25	
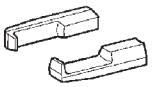	(09955-04061)	Claw No.6	
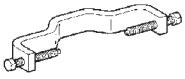	(09958-04011)	Holder	
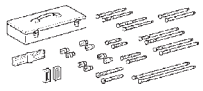	09950-50013	Puller C Set	

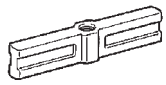	(09951-05010)	Hanger 150	
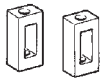	(09952-05010)	Slide Arm	
	(09953-05020)	Center Bolt 150	
	(09954-05021)	Claw No.2	

RECOMMENDED TOOLS

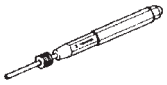	09031-00030	Pin Punch	
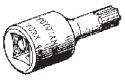	09042-00010	Torx Socket T30	
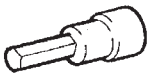	(09043-20060)	Socket Hexagon Wrench 6	
	09904-00010	Expander Set	
	(09904-00050)	No. 4 Claw	

PP

EQUIPMENT

Torque wrench	

POWER STEERING

SST

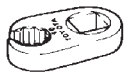	09023-12701	Union Nut Wrench 17mm	
	09023-38201	Union Nut Wrench 12mm	
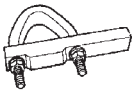	09612-00012	Rack & Pinion Steering Rack Housing Stand	
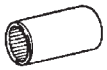	09616-00011	Steering Worm Bearing Adjusting Socket	
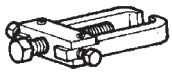	09628-62011	Boll Joint Puller	
	09630-00014	Power Steering Gear Housing Overhaul Tool Set	
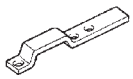	(09631-00132)	Vane Pump Bracket	
	09631-00350	Steering Rack Cover 35	
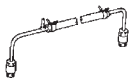	09631-12071	Steering Rack Oil Seal Test Tool	
	(09633-00010)	Packing	
	09631-20120	Cylinder End Stopper Nut Wrench	

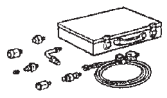	09640-10010	Power Steering Pressure Gauge Set	
	(09641-01010)	Gauge Assy	
	(09641-01030)	Attachment B	
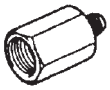	(09641-01060)	Attachment E	
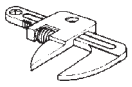	09922-10010	Variable Open Wrench	
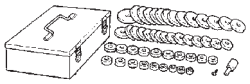	09950-60010	Replacer Set	
	(09951-00280)	Replacer 28	
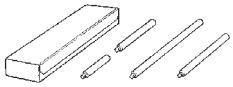	09950-70010	Handle Set	
	(09951-07100)	Handle 100	
	(09951-07200)	Handle 200	

PP

EQUIPMENT

Dial indicator with magnetic base	
Feeler gauge	
Micrometer	
Vernier caliper	
Torque wrench	
Vernier caliper	
Wooden block	

LUBRICANT

Item	Capacity	Classification
Power steering fluid	-	ATF "DEXRON" II or III

AIR CONDITIONING

SST

	07110-58060	Air Conditioner Service Tool Set	
	(07117-58080)	Quick Disconnect Adapter	
	(07117-58090)	Quick Disconnect Adapter	
	(07117-78050)	Refrigerant Charging Gauge	
	(07117-88060)	Refrigerant Charging Hose	
	(07117-88070)	Refrigerant Charging Hose	
	(07117-88080)	Refrigerant Charging Hose	
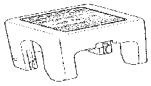	09870-00015	A/C Quick Joint Puller No.1	
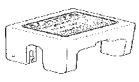	09870-00025	A/C Quick Joint Puller No.2	
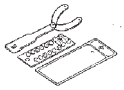	09960-10010	Variable Pin Wrench Set	
	(09962-01000)	Variable Pin Wrench Arm Assembly	

PP

	(09963-00500)	Pin 5	

RECOMMENDED TOOLS

	09082-00040	TOYOTA Electrical Tester	
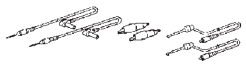	(09083-00150)	Test Lead Set	
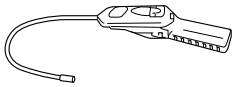	95146-00180	Halogen Leak Detector DENSO Part No.	

EQUIPMENT

Voltmeter	
Ohmmeter	
Vacuum pump	
Vinyl tape	
Dial indicator or dial indicator with magnetic base	
Torque wrench	
Service wire harness	
Radiator cap tester	

LUBRICANT

Item	Capacity	Classification
Compressor oil	-	ND-OIL8 or equivalent
When replacing No. 1 cooler evaporator	40 cc (1.35 fl. oz.)	ND-OIL8 or equivalent
When replacing cooler condenser	40 cc (1.35 fl. oz.)	ND-OIL8 or equivalent

SUPPLEMENTAL RESTRAINT SYSTEM

SST

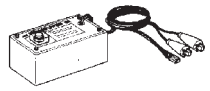	09082-00700	SRS Airbag Deployment Tool	
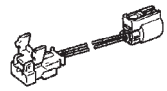	09082-00750	Airbag Deployment Wire Sub-harness No.3	
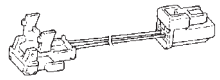	09082-00760	Airbag Deployment Wire Sub-harness No.4	
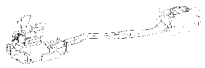	09082-00780	Airbag Deployment Wire Sub-harness No.6	
	09082-00802	Airbag Deployment Wire Sub-Harness No. 8	
	(09082-10801)	Wire A	
	(09082-30801)	Wire C	
	09843-18060	SRS Check Wire	

PP

RECOMMENDED TOOLS

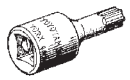	09042-00010	Torx Socket T30	
	09082-00040	TOYOTA Electrical Tester	
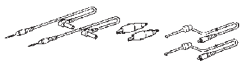	(09083-00150)	Test Lead Set	

HINT:
Torx is a registered trademark of Textron Inc.

EQUIPMENT

Torque wrench	
Ohmmeter	
Bolt Length: 35.0 mm (1.378 in.) Diameter: 6.0 mm (0.236 in.) Pitch: 1.0 mm (0.039 in.)	Airbag disposal
Tire Width: 185 mm (7.28 in.) Inner diameter: 360 mm (14.17 in.)	Airbag disposal
Tire with disc wheel Width: 185 mm (7.28 in.) Inner diameter: 360 mm (14.17 in.)	Airbag disposal
Plastic bag	Airbag disposal
Battery	Airbag disposal
Knife	Airbag disposal
Service-purpose wire harness	Airbag disposal
Shop rag or pice of cloth	Airbag disposal
Service wire	Airbag disposal

SEAT BELT

SST

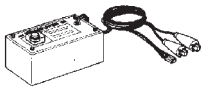	09082-00700	SRS Airbag Deployment Tool	
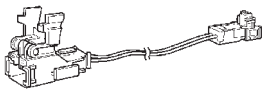	09082-00770	Airbag Deployment Wire Sub-harness No.5	

RECOMMENDED TOOLS

	09082-00040	TOYOTA Electrical Tester	
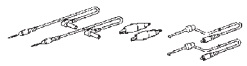	(09083-00150)	Test Lead Set	

EQUIPMENT

Battery	
Knife	
Ohmmeter	
Plastic bag	
Service-purpose wire harness	
Service wire harness	
Tire with wheel	
Torque wrench	

CRUISE CONTROL

RECOMMENDED TOOLS

	09082-00040	TOYOTA Electrical Tester	
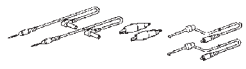	(09083-00150)	Test Lead Set	

EQUIPMENT

Ohmmeter	
Vinyl tape	
Torque wrench	

LIGHTING

RECOMMENDED TOOLS

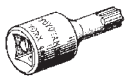	09042-00010	Torx Socket T30	
	09082-00040	TOYOTA Electrical Tester	
	(09083-00150)	Test Lead Set	

EQUIPMENT

Protective tape	
Ohmmeter	
Service wire harness	
Voltmeter	
Torque wrench	

WIPER AND WASHER

RECOMMENDED TOOLS

PP

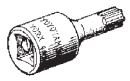	09042-00010	Torx Socket T30	
	09082-00040	TOYOTA Electrical Tester	
	(09083-00150)	Test Lead Set	

EQUIPMENT

Battery	
Ohmmeter	
Protective tape	
Brush	
Vinyl tape	
Service wire harness	
Torque wrench	

DOOR LOCK

RECOMMENDED TOOLS

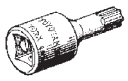	09042-00010	Torx Socket T30	
	09082-00040	TOYOTA Electrical Tester	
	(09083-00150)	Test Lead Set	

EQUIPMENT

Protective tape	
Ohmmeter	
Service wire harness	
MP grease	
Torque wrench	

SSM

Toyota Genuine Adhesive 1324, Three Bond 1324 or the equivalent	

METER

RECOMMENDED TOOLS

	09082-00040	TOYOTA Electrical Tester	
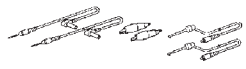	(09083-00150)	Test Lead Set	

EQUIPMENT

Torque wrench	
Tape	To avoid surface damage

AUDIO / VISUAL

RECOMMENDED TOOLS

	09082-00040	TOYOTA Electrical Tester	
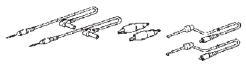	(09083-00150)	Test Lead Set	

EQUIPMENT

Battery	
Clip remover	
Ohmmeter	
Protective tape	
Service wire harness	
Torque wrench	

PARK ASSIST / MONITORING

RECOMMENDED TOOLS

	09082-00040	TOYOTA Electrical Tester	
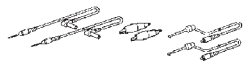	(09083-00150)	Test Lead Set	

EQUIPMENT

Battery	
Ohmmeter	
Service wire harness	
Torque wrench	

HORN

RECOMMENDED TOOLS

	09082-00040	TOYOTA Electrical Tester	
	(09083-00150)	Test Lead Set	

EQUIPMENT

Battery	
Ohmmeter	
Service wire harness	
Torque wrench	

OTHER SYSTEM

EQUIPMENT

Battery	
Ohmmeter	
Protective tape	
Voltmeter	
Service wire harness	
Torque wrench	

WINDSHIELD / WINDOWGLASS

RECOMMENDED TOOLS

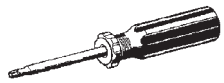	09041-00020	Torx Driver T25	
	09082-00040	TOYOTA Electrical Tester	
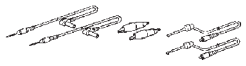	(09083-00150)	Test Lead Set	

EQUIPMENT

Ohmmeter	
Service wire harness	
Ammeter	
MP grease	
Knife	
Piano wire	
Suction cup	
Plastic sheet	
Brush	
Sponge	
Sealer gun	
Wooden block	
Voltmeter	
Tin foil	
Masking tape	
Torque wrench	

SSM

Toyota Genuine Windshield Glass Adhesive or the equivalent	

MIRROR

EQUIPMENT

Protective tape	
Service wire harness	
Ohmmeter	
Torque wrench	

INSTRUMENT PANEL

EQUIPMENT

Torque wrench	
Tape	To avoid surface damage

SEAT

EQUIPMENT

Clip remover	
Hog ring pliers	
Protective tape	
Torque wrench	

ENGINE HOOD / DOOR

SST

	09812-00010	Door Hinge Set Bolt Wrench	

RECOMMENDED TOOLS

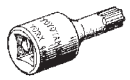	09042-00010	Torx Socket T30	
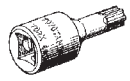	09042-00020	Torx Socket T40	

EQUIPMENT

Protective tape	
MP grease	
Metal saw	
Torque wrench	

SSM

Toyota Genuine Adhesive 1324, Three Bond 1324 or the equivalent	

EXTERIOR

RECOMMENDED TOOLS

	09070-20010	Moulding Remover	

EQUIPMENT

Bamboo scraper	
Cardboard	
Clip remover	
Industrial dryer	
Infrared light	
Non- residue solvent	
Paddle	
Piano wire	
Protective tape	
Sealer gun	
Shop rag or piece of cloth	
Squeegee	
Tape removal disc	
Torque wrench	
Wooden block	

SSM

Toyota Genuine Windshield Glass Adhesive or the equivalent	

INTERIOR

EQUIPMENT

Clip remover	
Double-sided tape	
Protective tape	
Torque wrench	

MULTIPLEX COMMUNICATION

RECOMMENDED TOOLS

	09082-00040	TOYOTA Electrical Tester	
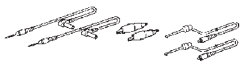	(09083-00150)	Test Lead Set	

CAN COMMUNICATION

RECOMMENDED TOOLS

	09082-00040	TOYOTA Electrical Tester	
	(09083-00150)	Test Lead Set	

FRONT PROPELLER SHAFT ASSEMBLY (for 4WD)

COMPONENTS

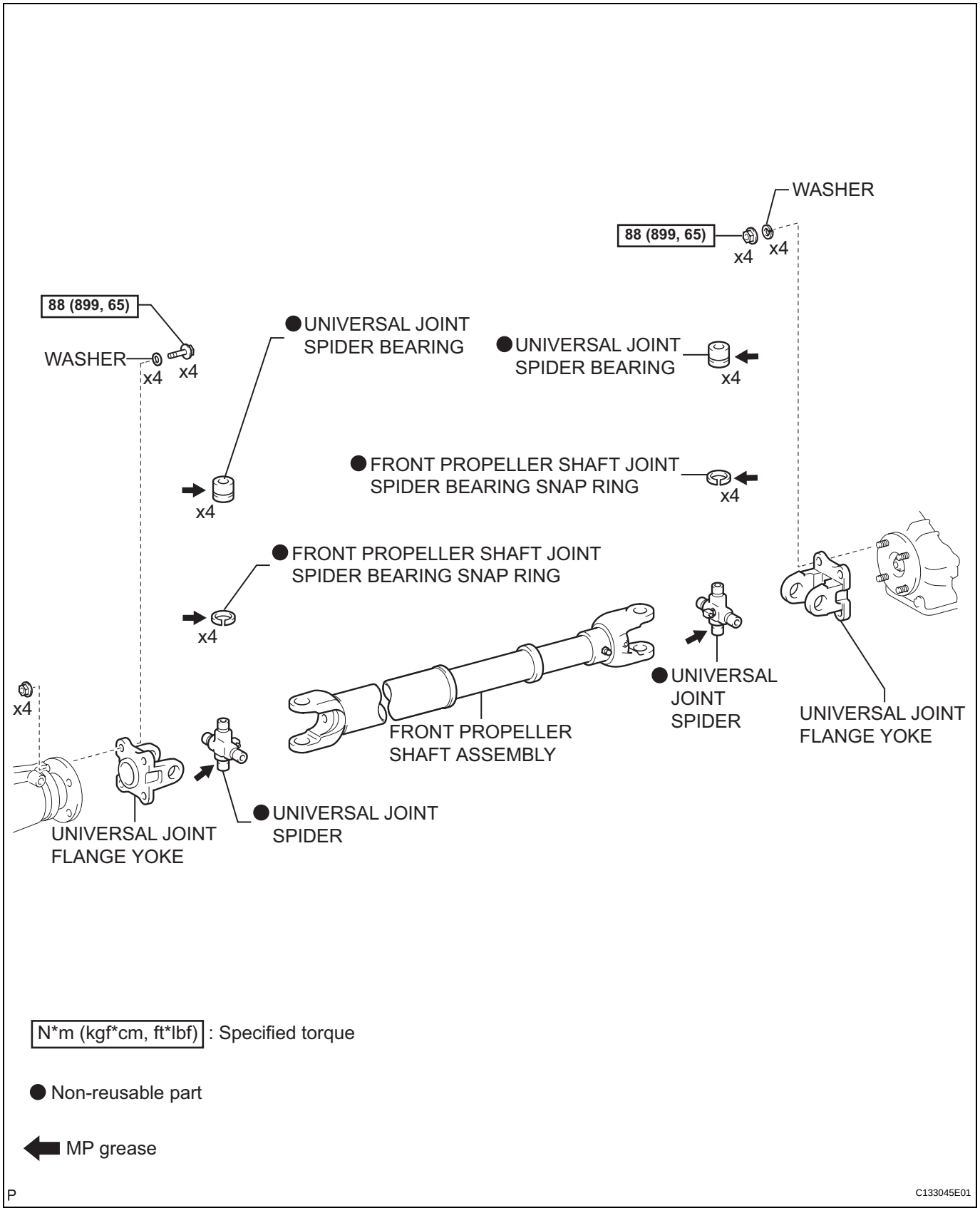

PR

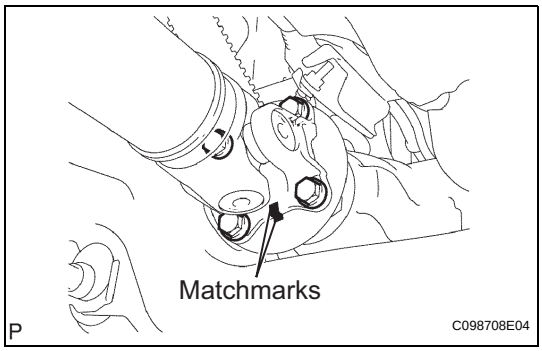

REMOVAL

1. REMOVE FRONT PROPELLER SHAFT ASSEMBLY

(a) Place matchmarks on the propeller shaft flange and differential flange.

(b) Remove the 4 nuts, 4bolts and 4 washers.

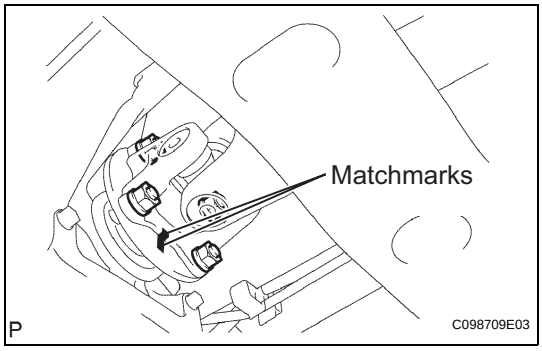

(c) Place matchmarks on the propeller shaft flange and transfer flange.

(d) Remove the 4 nuts, 4 washers and the propeller shaft assembly.

DISASSEMBLY

1. INSPECT FRONT PROPELLER SHAFT ASSEMBLY

(a) Check that the propeller shaft is not damaged or deformed.
If necessary, replace the propeller shaft.

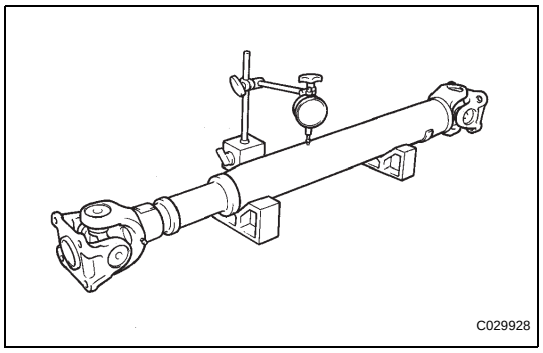

(b) Using a dial indicator, check the propeller shaft runout.
Maximum runout:
0.3 mm (0.012 in.)
If the shaft runout is greater than the maximum, replace the propeller shaft.

2. INSPECT UNIVERSAL JOINT SPIDER BEARING

(a) Check that the joints move smoothly.
(b) Check the spider bearings for wear and damage.
(c) Check the spider bearing axial play by turning the yoke while holding the shaft tightly.
Maximum bearing axial play:
0 mm (0 in.)
If necessary, replace the spider bearing.

3. REMOVE FRONT PROPELLER SHAFT UNIVERSAL JOINT SPIDER KIT

(a) Place matchmarks on the flange yoke and sleeve yoke.

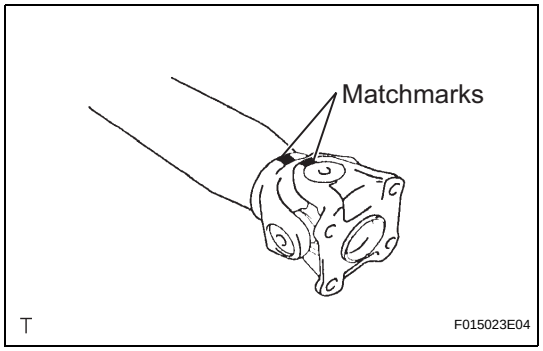

(b) Using a brass bar and a hammer, slightly tap in the spider bearing outer races.
(c) Using 2 screwdrivers, remove the 4 snap rings from the grooves.

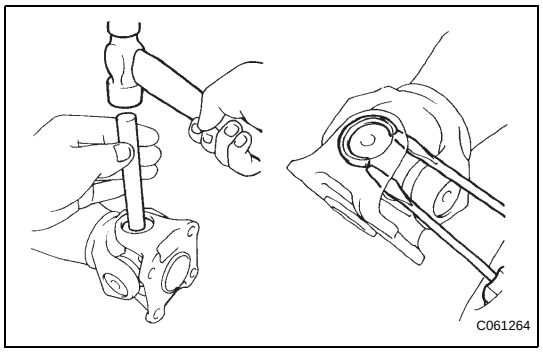

(d) Using SST, push out the spider bearing from the propeller shaft.
SST 09332-25010
HINT:
Sufficiently raise the part indicated by (A) so that it does not come into contact with the spider bearing.

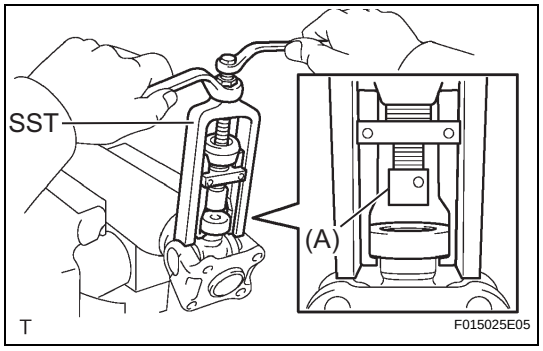

PR

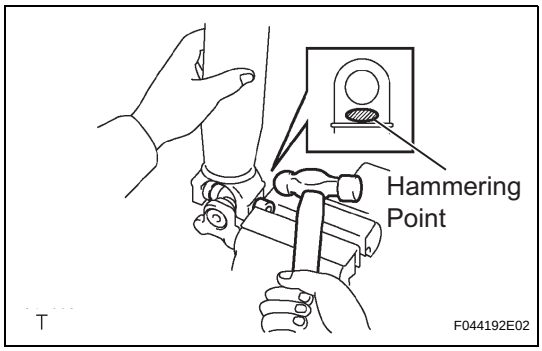

(e) Clamp the spider bearing outer race in a vise and tap off the propeller shaft with a hammer.
NOTICE:
Do not tap the shaft.
HINT:
Remove the bearing on the opposite side in the same procedure.

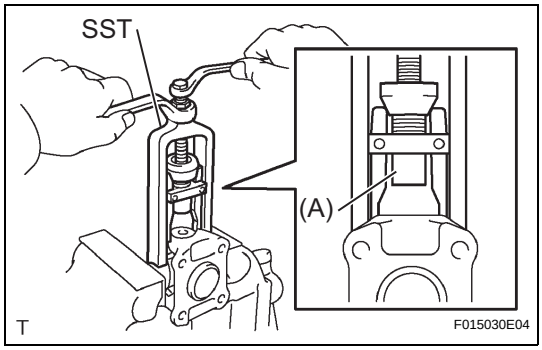

(f) Install the 2 removed spider bearing outer races onto the spider.
(g) Using SST, push the bearing out of the yoke.
SST 09332-25010
HINT:
Sufficiently raise the part indicated by (A) so that it does not come into contact with the bearing.

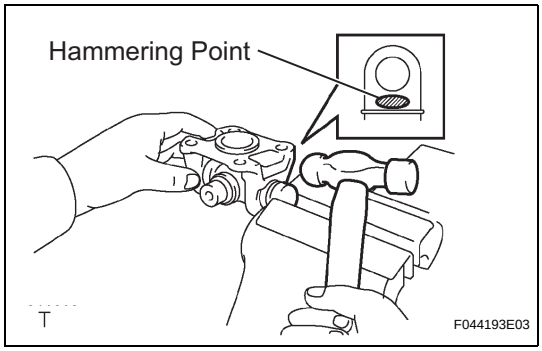

(h) Clamp the outer bearing race in a vise and tap off the flange yoke with a hammer.
(i) Remove the spider.

REASSEMBLY

1. INSTALL FRONT PROPELLER SHAFT UNIVERSAL JOINT SPIDER KIT

(a) Apply MP grease to a new spider and spider bearings.
(b) Fit the spider into the flange yoke.

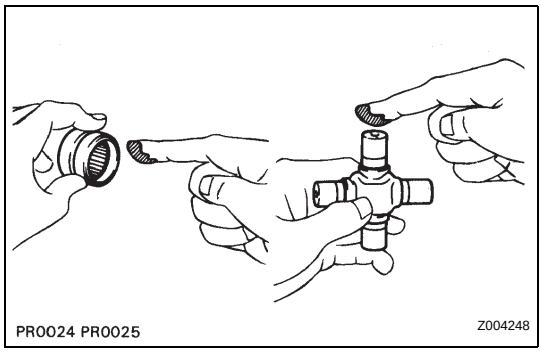

PR

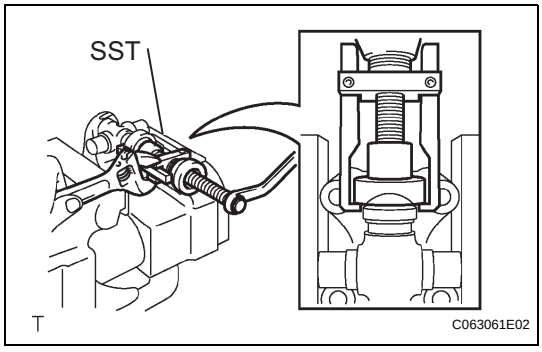

(c) Using SST, install the spider bearings onto the spider.
SST 09332-25010
(d) Using SST, adjust both bearings so that the snap ring grooves are at maximum and equal in width.
SST 09332-25010

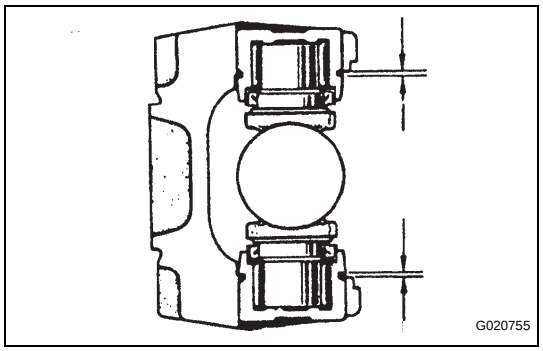

(e) Install 4 new snap rings of equal thickness which will allow no axial play.
HINT:
Do not reuse the snap rings.

Thickness of snap ring

Parts No.	Thickness mm (in.)	Mark
90520-25039	2.28 to 2.30	1
90520-25040	2.30 to 2.32	2
90520-25041	2.32 to 2.34	-
90520-25042	2.34 to 2.36	Brown
90520-25043	2.36 to 2.38	Blue
90520-25044	2.38 to 2.40	6
90520-25045	2.40 to 2.42	7
90520-25046	2.42 to 2.44	8
90520-25047	2.44 to 2.46	9
90520-25048	2.46 to 2.48	10
90520-25049	2.48 to 2.50	A
90520-25050	2.50 to 2.52	B
90520-25051	2.52 to 2.54	C
90520-25052	2.54 to 2.56	D
90520-25053	2.56 to 2.58	E
90520-25054	2.18 to 2.20	J
90520-25055	2.20 to 2.22	K
90520-25056	2.22 to 2.24	F
90520-25057	2.24 to 2.26	G
90520-25058	2.26 to 2.28	H

NOTICE:
- **Use a new snap ring.**
- **Use snap rings as close as possible to the same thickness on both ends.**

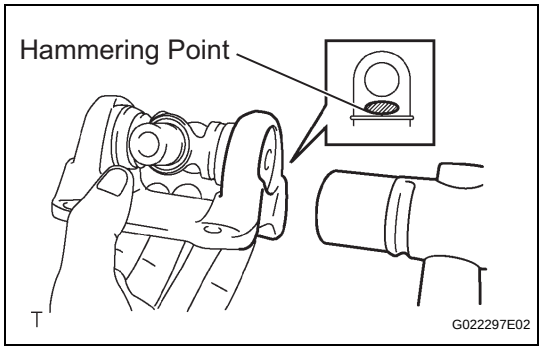

(f) Using a hammer, tap the yoke until there is no clearance between the spider bearing outer race and the snap ring.
HINT:
Install a new spider bearing on the sleeve side in the procedure described above.

(g) Align the matchmarks on the flange yoke and the sleeve yoke.

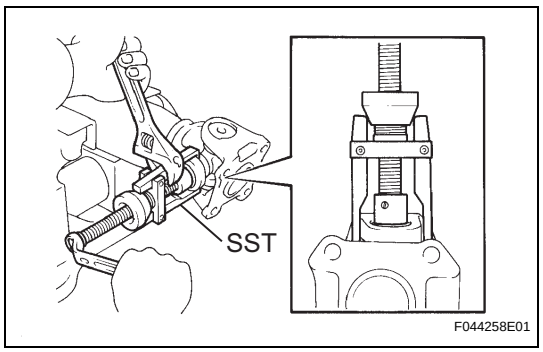

(h) Using SST, install the spider bearings onto the spider.
SST 09332-25010

(i) Using SST, adjust both bearings so that the snap ring grooves are at maximum and equal in width.
SST 09332-25010

(j) Install 4 new snap rings of equal thickness which will allow no axial play.
HINT:
Do not reuse the snap rings.

PR

Thickness of snap ring

Parts No.	Thickness mm (in.)	Mark
90520-25039	2.28 to 2.30	1
90520-25040	2.30 to 2.32	2
90520-25041	2.32 to 2.34	-
90520-25042	2.34 to 2.36	Brown
90520-25043	2.36 to 2.38	Blue
90520-25044	2.38 to 2.40	6
90520-25045	2.40 to 2.42	7
90520-25046	2.42 to 2.44	8
90520-25047	2.44 to 2.46	9
90520-25048	2.46 to 2.48	10
90520-25049	2.48 to 2.50	A
90520-25050	2.50 to 2.52	B
90520-25051	2.52 to 2.54	C
90520-25052	2.54 to 2.56	D
90520-25053	2.56 to 2.58	E
90520-25054	2.18 to 2.20	J
90520-25055	2.20 to 2.22	K
90520-25056	2.22 to 2.24	F
90520-25057	2.24 to 2.26	G
90520-25058	2.26 to 2.28	H

NOTICE:
- **Use a new snap ring.**
- **Use snap rings as close as possible to the same thickness on both ends.**

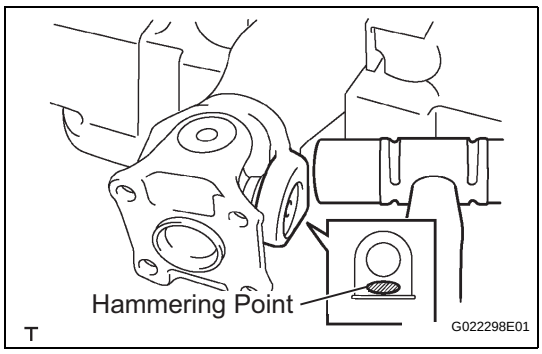

(k) Using a plastic hammer, tap the yoke until there is no clearance between the spider bearing outer race and the snap ring.
HINT:
Install a new spider bearing on the sleeve side in the procedure described above.

2. INSPECT UNIVERSAL JOINT SPIDER BEARING

(a) Check that the joints move smoothly.
(b) Check the spider bearing axial play by turning the yoke while holding the shaft tightly.
Maximum bearing axial play:
0 mm (0 in.)

3. INSPECT FRONT PROPELLER SHAFT ASSEMBLY

HINT:
When replacing the spider bearing, be sure that the grease fitting hole is facing in the direction shown in the illustration.

PR

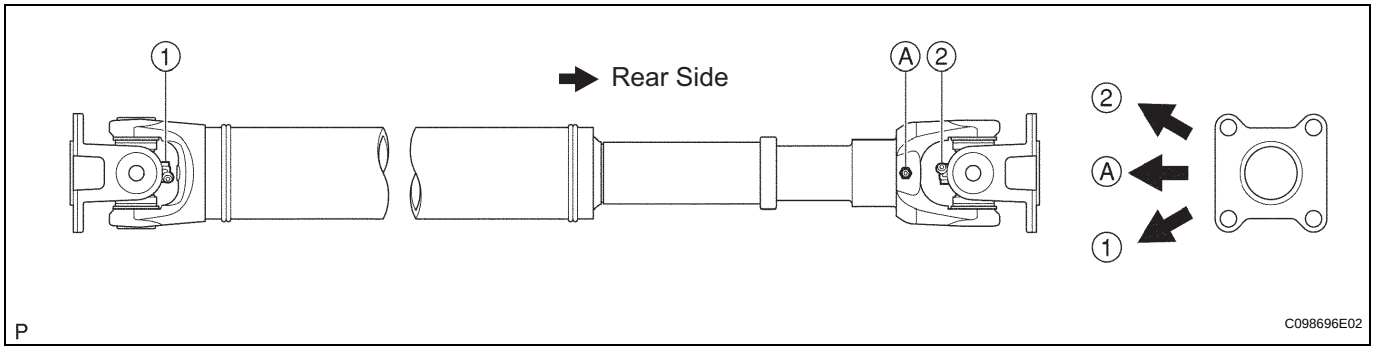

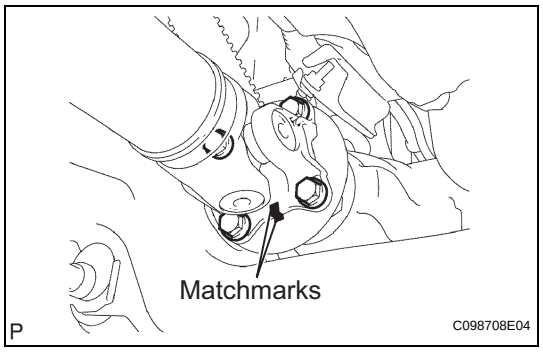

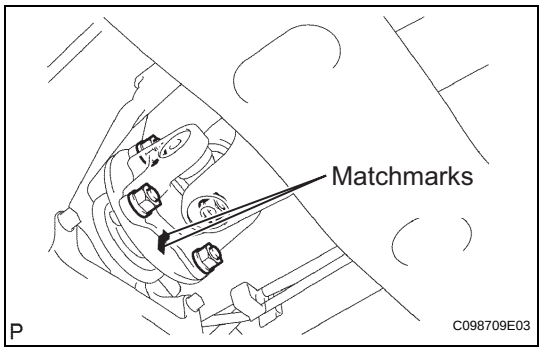

INSTALLATION

1. INSTALL FRONT PROPELLER SHAFT ASSEMBLY

(a) Align the matchmarks on the yoke and differential flange.

(b) Install the propeller shaft assembly with the 4 bolts, 4 nuts and 4 washers.
Torque: 88 N*m (899 kgf*cm, 65 ft.*lbf)

(c) Align the matchmarks on the yoke and transfer flange.

(d) Install the propeller shaft assembly with the 4 nuts and 4 washers.
Torque: 88 N*m (899 kgf*cm, 65 ft.*lbf)

REAR PROPELLER SHAFT ASSEMBLY

COMPONENTS

for 2WD:

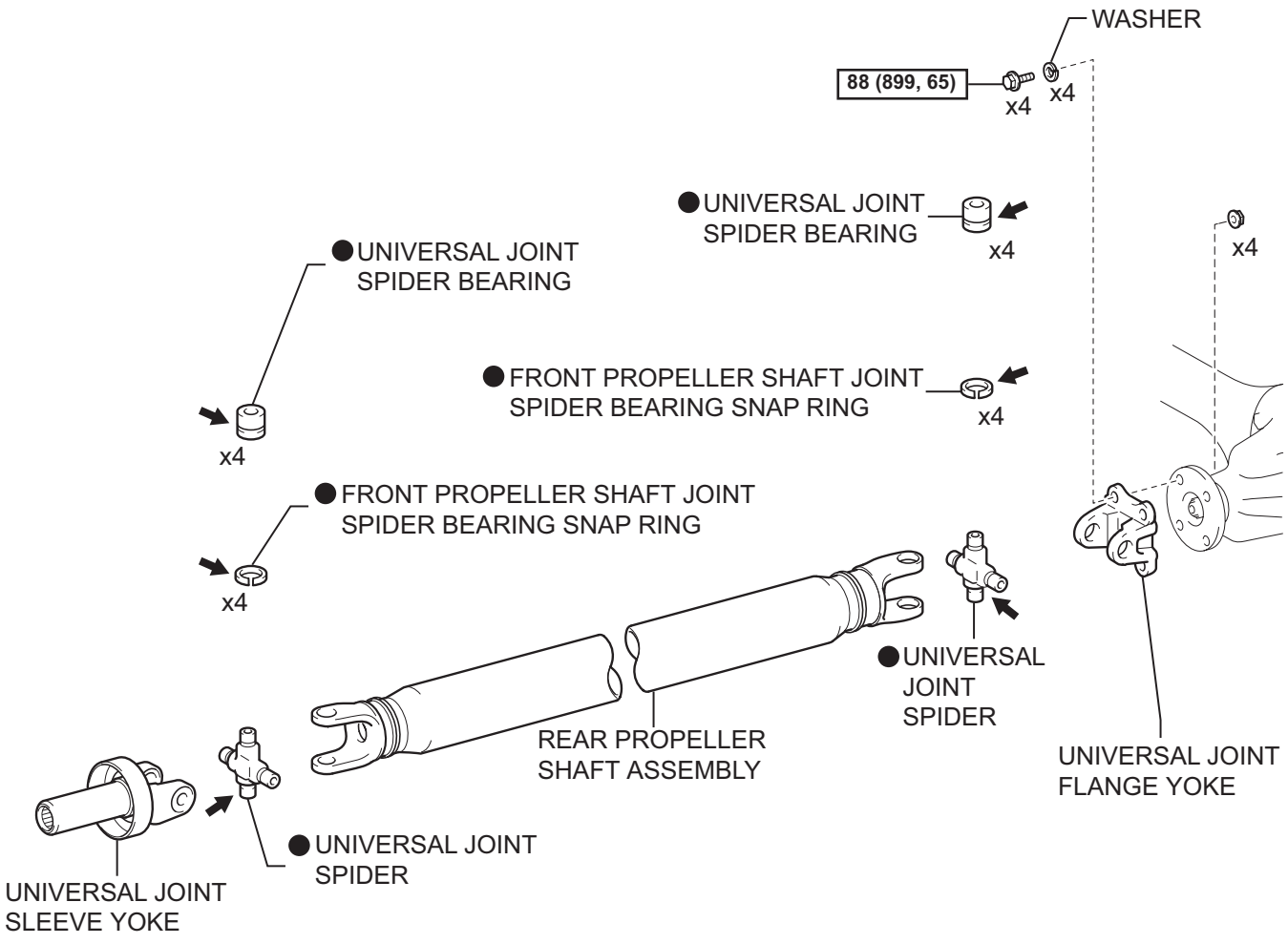

N*m (kgf*cm, ft*lbf) : Specified torque

● Non-reusable part

⬅ MP grease

P

C133046E01

PR

for 4WD:

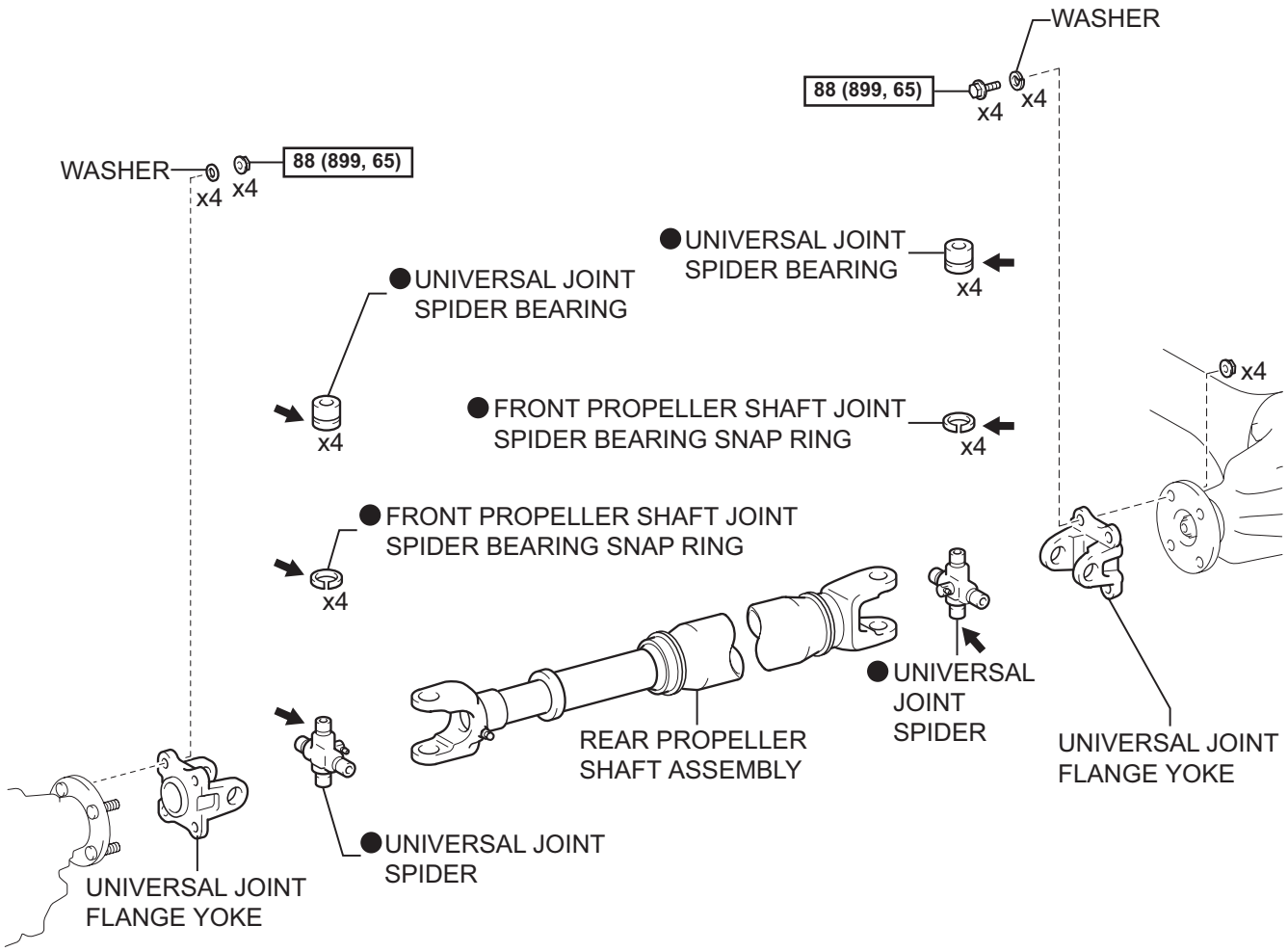

PR

N*m (kgf*cm, ft*lbf) : Specified torque

● Non-reusable part

MP grease

P

C133047E01

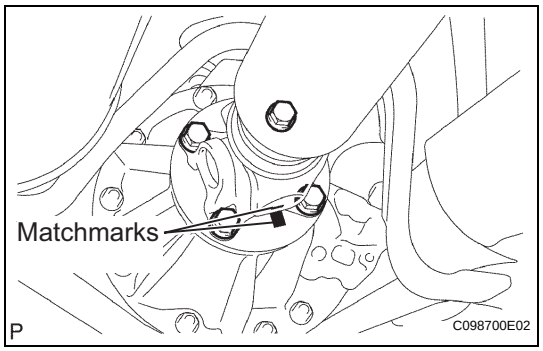

REMOVAL

1. REMOVE REAR PROPELLER SHAFT ASSEMBLY (for 2WD)

(a) Place matchmarks on the propeller shaft flange and differential flange.
(b) Remove the 4 nuts, 4 bolts and 4 washers.
(c) Remove the propeller shaft assembly.

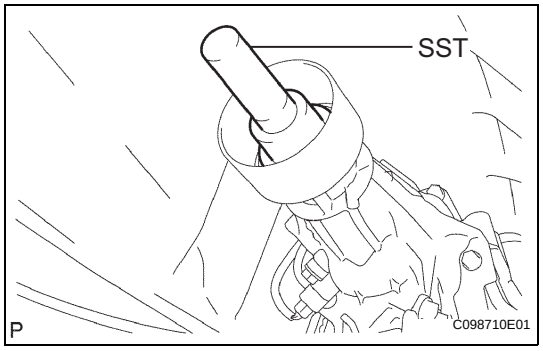

(d) Insert SST into the extension housing to prevent oil leakage.
SST 09325-40010

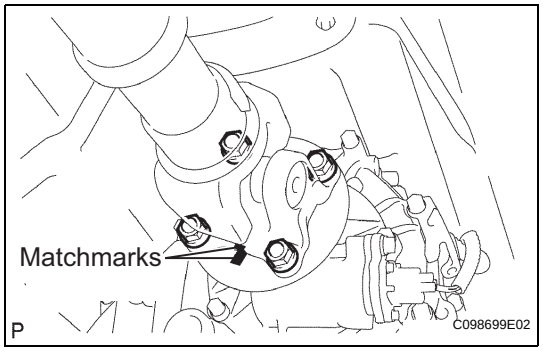

2. REMOVE REAR PROPELLER SHAFT ASSEMBLY (for 4WD)

(a) Place matchmarks on the propeller shaft flange and transfer flange.
(b) Remove the 4 nuts and 4 washers.

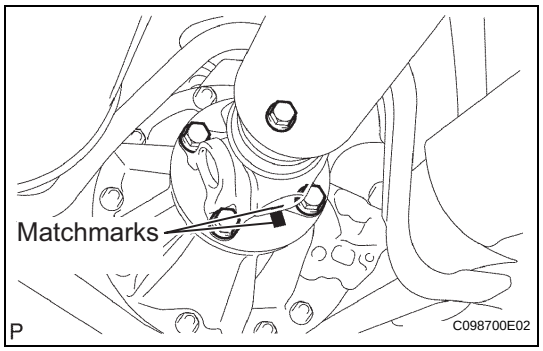

(c) Place matchmarks on the propeller shaft flange and differential flange.
(d) Remove the 4 nuts, 4 bolts, 4 washers and the propeller shaft assembly.

DISASSEMBLY

1. INSPECT REAR PROPELLER SHAFT ASSEMBLY

(a) Check that the propeller shaft is not damaged or deformed.
If necessary, replace the propeller shaft.

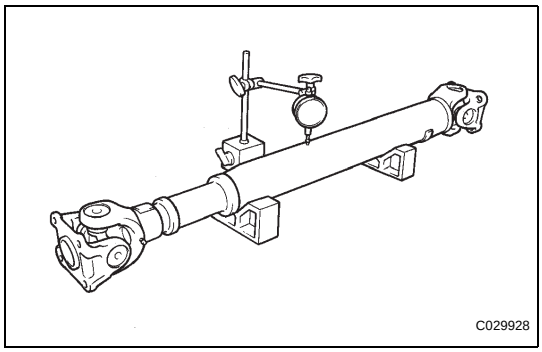

(b) Using a dial indicator, check the propeller shaft runout.
Maximum runout:
0.3 mm (0.012 in.)
If the shaft runout is greater than the maximum, replace the propeller shaft.

2. INSPECT UNIVERSAL JOINT SPIDER BEARING

(a) Check that the joints move smoothly.
(b) Check the spider bearings for wear and damage.
(c) Check the spider bearing axial play by turning the yoke while holding the shaft tightly.
Maximum bearing axial play:
0 mm (0 in.)
If necessary, replace the spider bearing.

3. REMOVE REAR PROPELLER SHAFT UNIVERSAL JOINT SPIDER KIT

(a) Place matchmarks on the flange yoke and sleeve yoke.

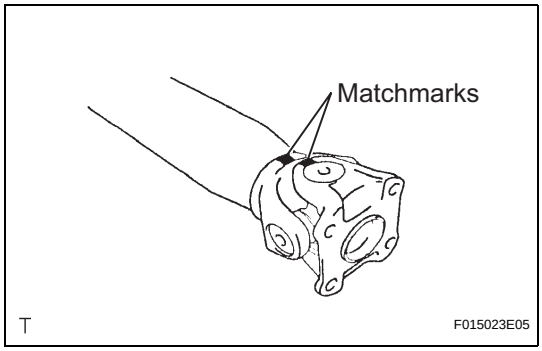

(b) Using a brass bar and a hammer, slightly tap in the spider bearing outer races.
(c) Using 2 screwdrivers, remove the 4 snap rings from the grooves.

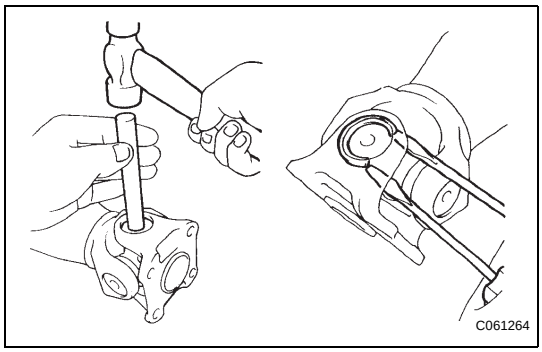

PR

(d) Using SST, push out the spider bearing from the propeller shaft.
SST 09332-25010
HINT:
Sufficiently raise the part indicated by (A) so that it does not come into contact with the spider bearing.

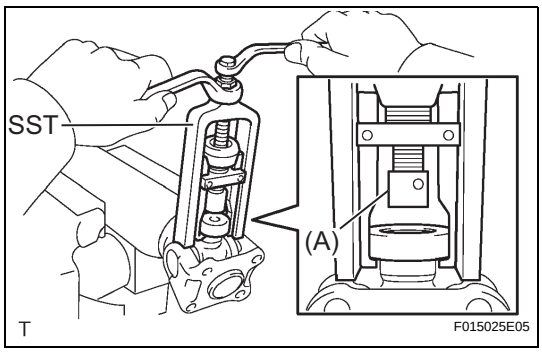

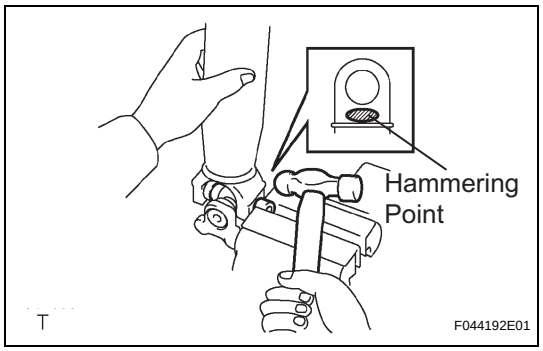

(e) Clamp the spider bearing outer race in a vise and tap off the propeller shaft with a hammer.
NOTICE:
Do not tap the shaft.
HINT:
Remove the spider bearings on the opposite side in the same procedure.

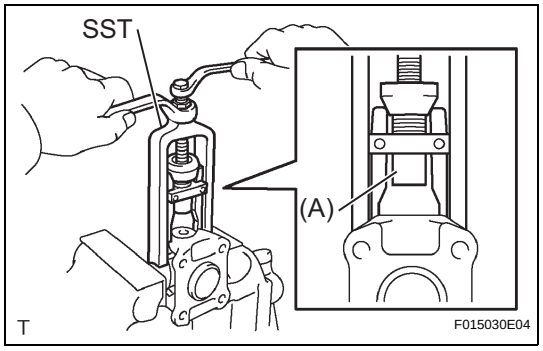

(f) Install the 2 removed spider bearing outer races onto the spider.
(g) Using SST, push out the bearing from the yoke.
SST 09332-25010
HINT:
Sufficiently raise the part indicated by (A) so that it does not come into contact with the bearing.

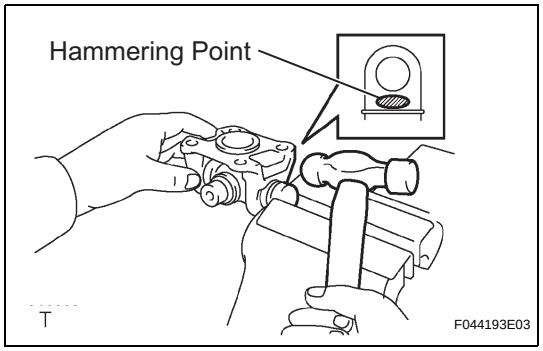

(h) Clamp the outer bearing race in a vise and tap off the flange yoke with a hammer.
(i) Remove the spider.

REASSEMBLY

1. INSTALL REAR PROPELLER SHAFT UNIVERSAL JOINT SPIDER KIT

(a) Apply MP grease to a new spider and spider bearings.
(b) Fit the spider into the flange yoke.

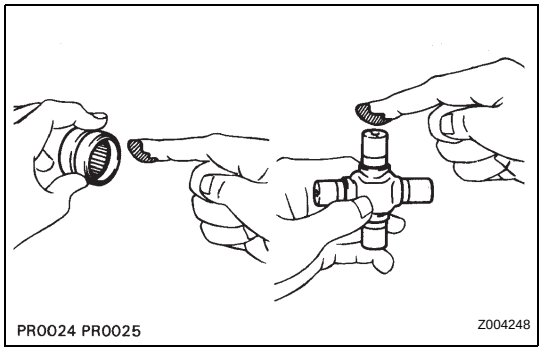

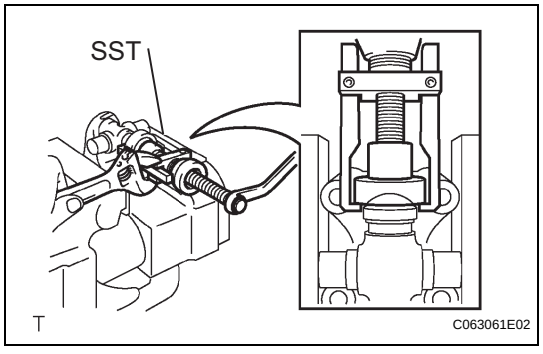

(c) Using SST, install the spider bearings onto the spider.
SST 09332-25010
(d) Using SST, adjust both bearings so that the snap ring grooves are at maximum and equal in width.
SST 09332-25010

PR

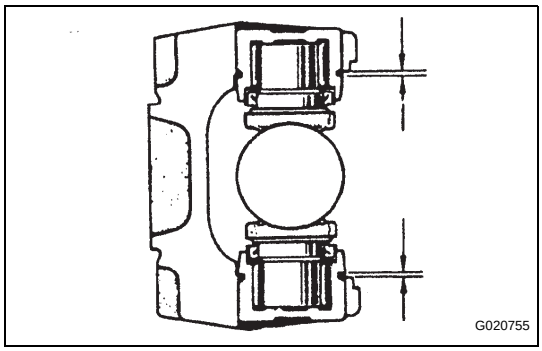

(e) Install 4 new snap rings of equal thickness which will allow no axial play.
HINT:
Do not reuse the snap rings.

Thickness of snap ring

Parts No.	Thickness mm (in.)	Mark
90520-25039	2.28 to 2.30	1
90520-25040	2.30 to 2.32	2
90520-25041	2.32 to 2.34	-
90520-25042	2.34 to 2.36	Brown
90520-25043	2.36 to 2.38	Blue
90520-25044	2.38 to 2.40	6
90520-25045	2.40 to 2.42	7
90520-25046	2.42 to 2.44	8
90520-25047	2.44 to 2.46	9
90520-25048	2.46 to 2.48	10
90520-25049	2.48 to 2.50	A
90520-25050	2.50 to 2.52	B
90520-25051	2.52 to 2.54	C
90520-25052	2.54 to 2.56	D
90520-25053	2.56 to 2.58	E
90520-25054	2.18 to 2.20	J
90520-25055	2.20 to 2.22	K
90520-25056	2.22 to 2.24	F
90520-25057	2.24 to 2.26	G
90520-25058	2.26 to 2.28	H

NOTICE:
- **Use a new snap ring.**
- **Use snap rings as close as possible the same thickness on both ends.**

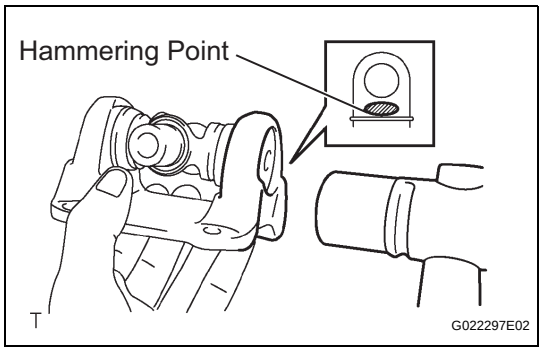

(f) Using a hammer, tap the yoke until there is no clearance between the spider bearing outer race and snap ring.
HINT:
Install new spider bearings onto the sleeve side in the procedure described above.

(g) Align the matchmarks on the flange yoke and the sleeve yoke.

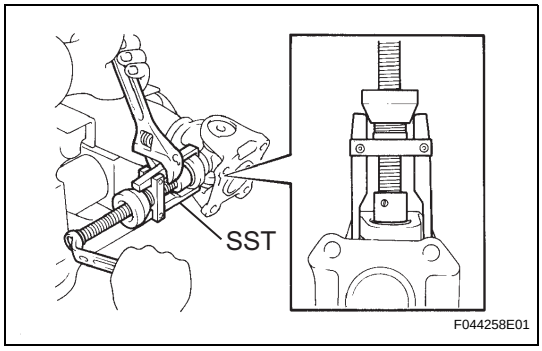

(h) Using SST, install the spider bearings onto the spider.
SST 09332-25010

(i) Using SST, adjust both bearings so that the snap ring grooves are at maximum and equal in width.
SST 09332-25010

(j) Install 4 new snap rings of equal thickness which will allow no axial play.
HINT:
Do not reuse the snap rings.

PR

Thickness of snap ring

Parts No.	Thickness mm (in.)	Mark
90520-25039	2.28 to 2.30	1
90520-25040	2.30 to 2.32	2
90520-25041	2.32 to 2.34	-
90520-25042	2.34 to 2.36	Brown
90520-25043	2.36 to 2.38	Blue
90520-25044	2.38 to 2.40	6
90520-25045	2.40 to 2.42	7
90520-25046	2.42 to 2.44	8
90520-25047	2.44 to 2.46	9
90520-25048	2.46 to 2.48	10
90520-25049	2.48 to 2.50	A
90520-25050	2.50 to 2.52	B
90520-25051	2.52 to 2.54	C
90520-25052	2.54 to 2.56	D
90520-25053	2.56 to 2.58	E
90520-25054	2.18 to 2.20	J
90520-25055	2.20 to 2.22	K
90520-25056	2.22 to 2.24	F
90520-25057	2.24 to 2.26	G
90520-25058	2.26 to 2.28	H

NOTICE:
- **Use a new snap ring.**
- **Use snap rings as close as possible to the same thickness on both ends.**

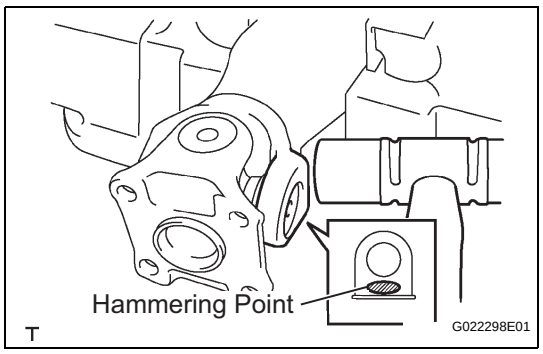

(k) Using a plastic hammer, tap the yoke until there is no clearance between the spider bearing outer race and snap ring.
HINT:
Install new spider bearings onto the sleeve side in the procedure described above.

2. INSPECT UNIVERSAL JOINT SPIDER BEARING

(a) Check that the joints move smoothly.
(b) Check the spider bearing axial play by turning the yoke while holding the shaft tightly.
Maximum bearing axial play:
0 mm (0 in.)

3. INSPECT REAR PROPELLER SHAFT ASSEMBLY (for 4WD)

HINT:
When replacing the spider bearing, be sure that the grease fitting hole is facing in the direction shown in the illustration.

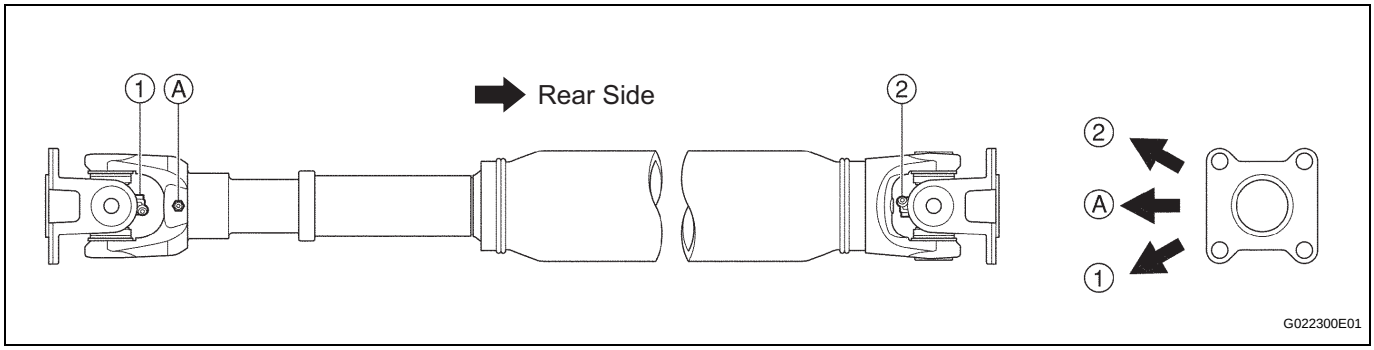

INSTALLATION

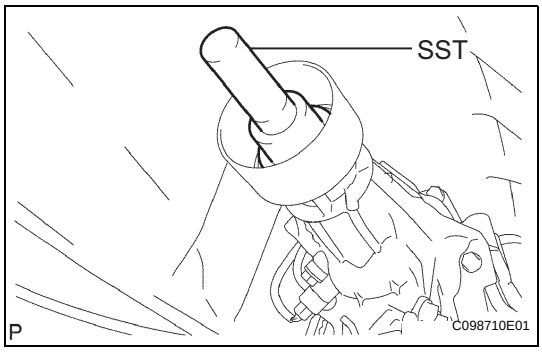

1. INSTALL REAR PROPELLER SHAFT ASSEMBLY (for 2WD)

(a) Remove SST from the extension housing.

(b) Install the propeller shaft assembly into the extension housing.

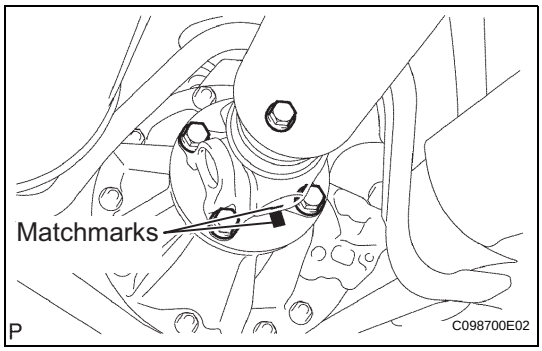

(c) Align the matchmarks on the propeller shaft flange and differential flange.

(d) Install the propeller shaft assembly with the 4 bolts, 4 nuts and 4 washers.
Torque: 88 N*m (899 kgf*cm, 65 ft.*lbf)

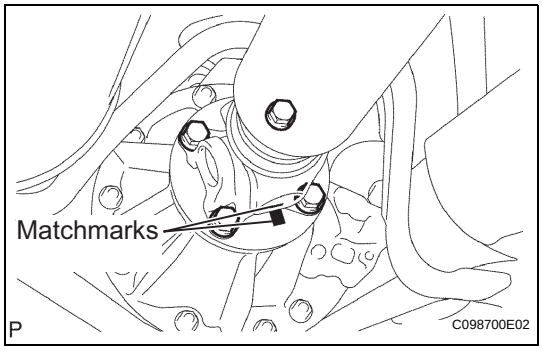

2. INSTALL REAR PROPELLER SHAFT ASSEMBLY (for 4WD)

(a) Align the matchmarks on the propeller shaft flange and differential flange.

(b) Install the propeller shaft assembly with the 4 bolts, 4 nuts and 4 washers.
Torque: 88 N*m (899 kgf*cm, 65 ft.*lbf)

PR

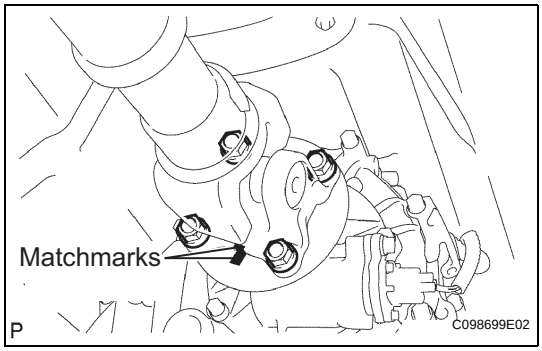

(c) Align the matchmarks on the propeller shaft flange and transfer flange.

(d) Install the propeller shaft assembly with the 4 nuts and 4 washers.
Torque: 88 N*m (899 kgf*cm, 65 ft.*lbf)

MANUAL TRANSMISSION SYSTEM

PROBLEM SYMPTOMS TABLE

Use the table below to help determine the cause of the problems. The numbers indicate the ranked order of probability of each of the possible causes. Check each part in the order suggested. If necessary, replace the applicable parts.

Symptom	Suspected area	See page
Abnormal noise	1. Oil level (Low)	MT-2
	2. Oil (Wrong)	MT-2
	3. Gears (Worn or damaged)	-
	4. Bearings (Worn or damaged)	-
Oil leakage	1. Oil level (High)	MT-2
	2. Gasket (Damaged)	-
	3. Oil seal (Worn or damaged)	-
	4. O-Ring (Worn or damaged)	-
Hard shifting or will not shift	1. Synchronizer ring (Worn or damaged)	-
	2. Shift key spring (Damaged)	-
Jumps out of gear	1. Locking ball spring (Damaged)	-
	2. Shift fork (Worn)	-
	3. Gears (Worn or damaged)	-
	4. Bearings (Worn or damaged)	-

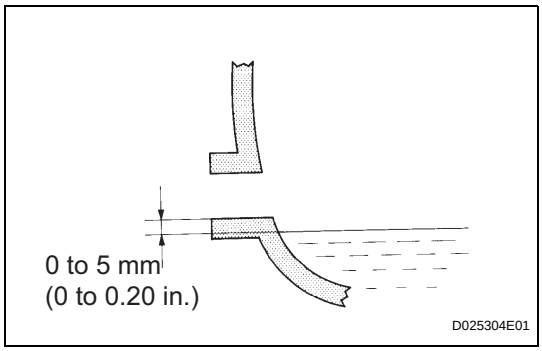

MANUAL TRANSMISSION OIL

ON-VEHICLE INSPECTION

1. INSPECT TRANSMISSION OIL

(a) Park the vehicle in a level place.

(b) Remove the transmission filler plug and gasket.

(c) Check that the oil surface is within 5 mm (0.20 in.) of the lowest point of the transmission filler plug opening.

NOTICE:

- **Problems may occur when the oil level is too high or low.**
- **After replacing the oil, drive the vehicle and check the oil level again.**

(d) Check for oil leakage when the oil level is low.

(e) Install the transmission filler plug and a new gasket.

Torque: 37 N*m (377 kgf*cm, 27 ft.*lbf)

MANUAL TRANSMISSION ASSEMBLY

COMPONENTS

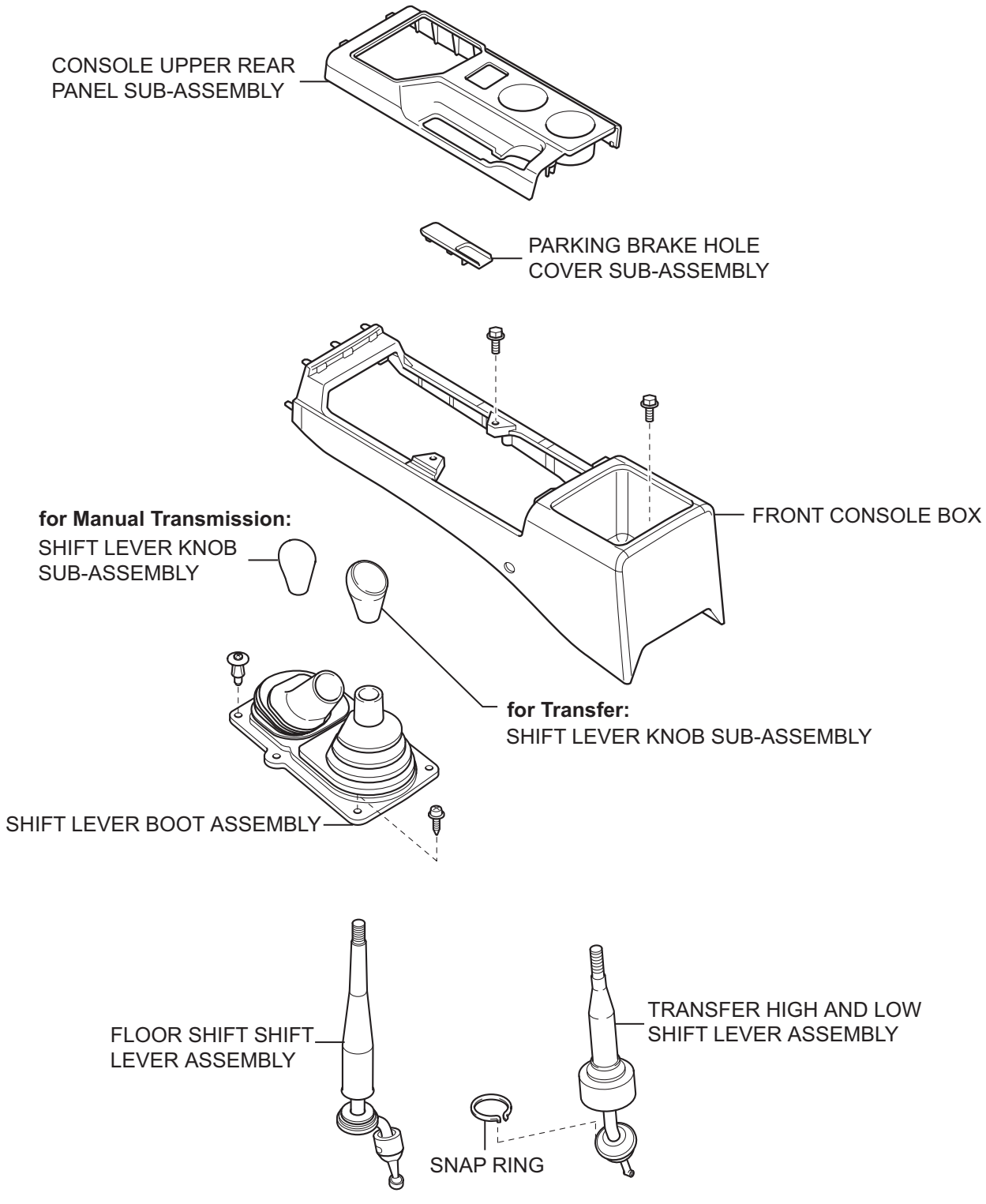

MT

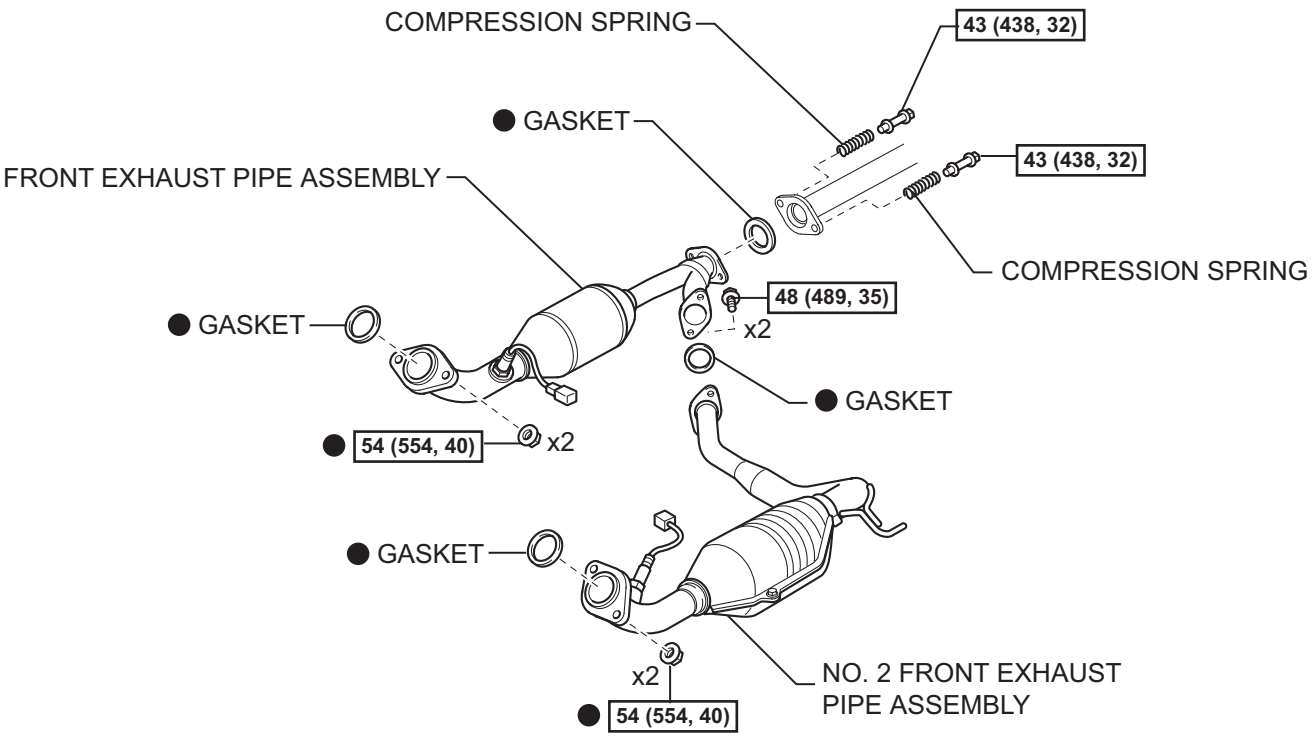

MT

N*m (kgf*cm, ft*lbf) :Specified torque

● Non-reusable part

Y

C136408E01

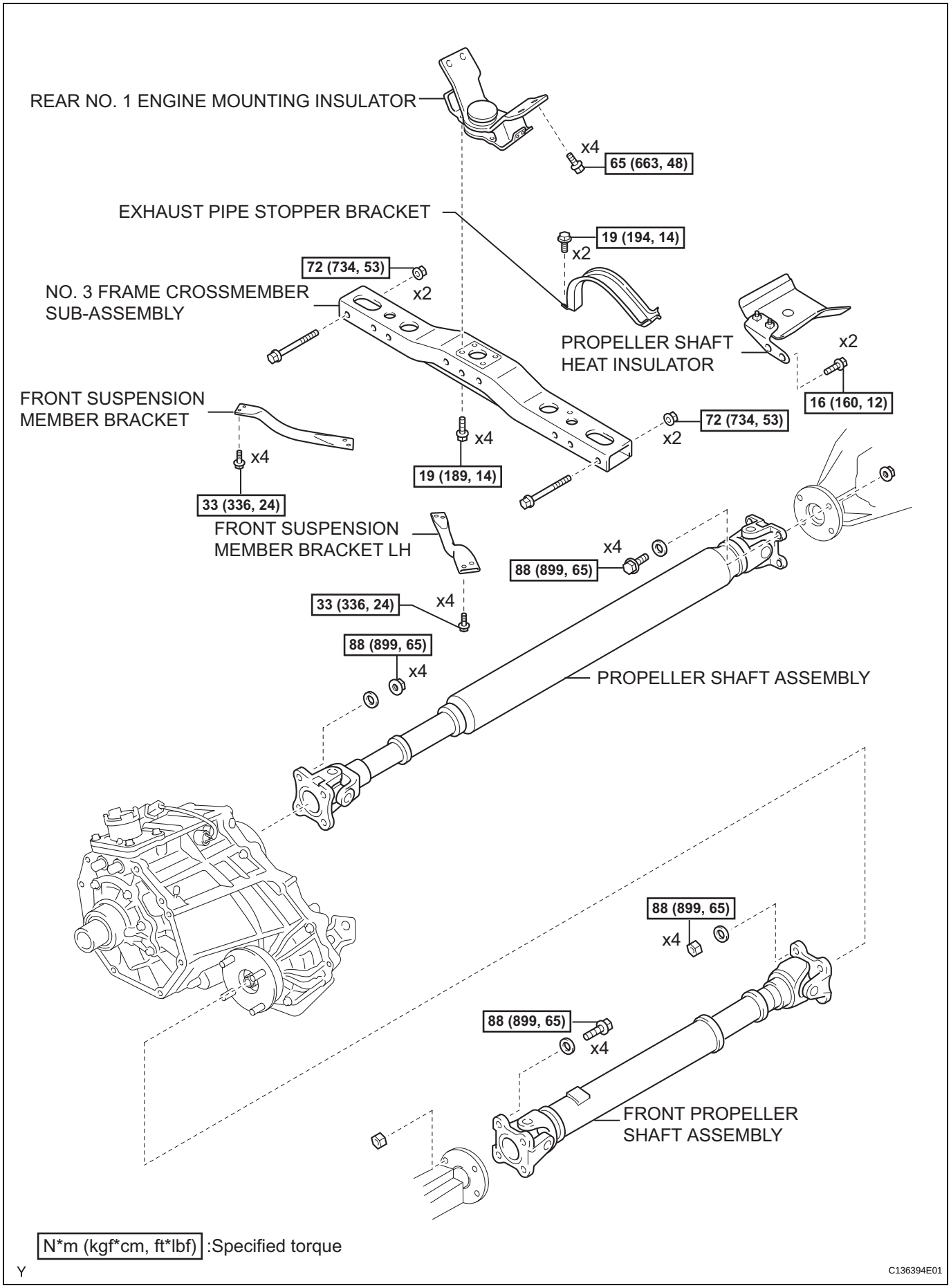
REAR NO. 1 ENGINE MOUNTING INSULATOR
x4
65 (663, 48)
EXHAUST PIPE STOPPER BRACKET
19 (194, 14)
x2
72 (734, 53)
x2
NO. 3 FRAME CROSSMEMBER SUB-ASSEMBLY
PROPELLER SHAFT HEAT INSULATOR
x2
16 (160, 12)
FRONT SUSPENSION MEMBER BRACKET
x4
33 (336, 24)
x4
19 (189, 14)
72 (734, 53)
x2
FRONT SUSPENSION MEMBER BRACKET LH
x4
88 (899, 65)
33 (336, 24)
x4
88 (899, 65)
x4
PROPELLER SHAFT ASSEMBLY
88 (899, 65)
x4
88 (899, 65)
x4
FRONT PROPELLER SHAFT ASSEMBLY
N*m (kgf*cm, ft*lbf) :Specified torque
Y
C136394E01

MT

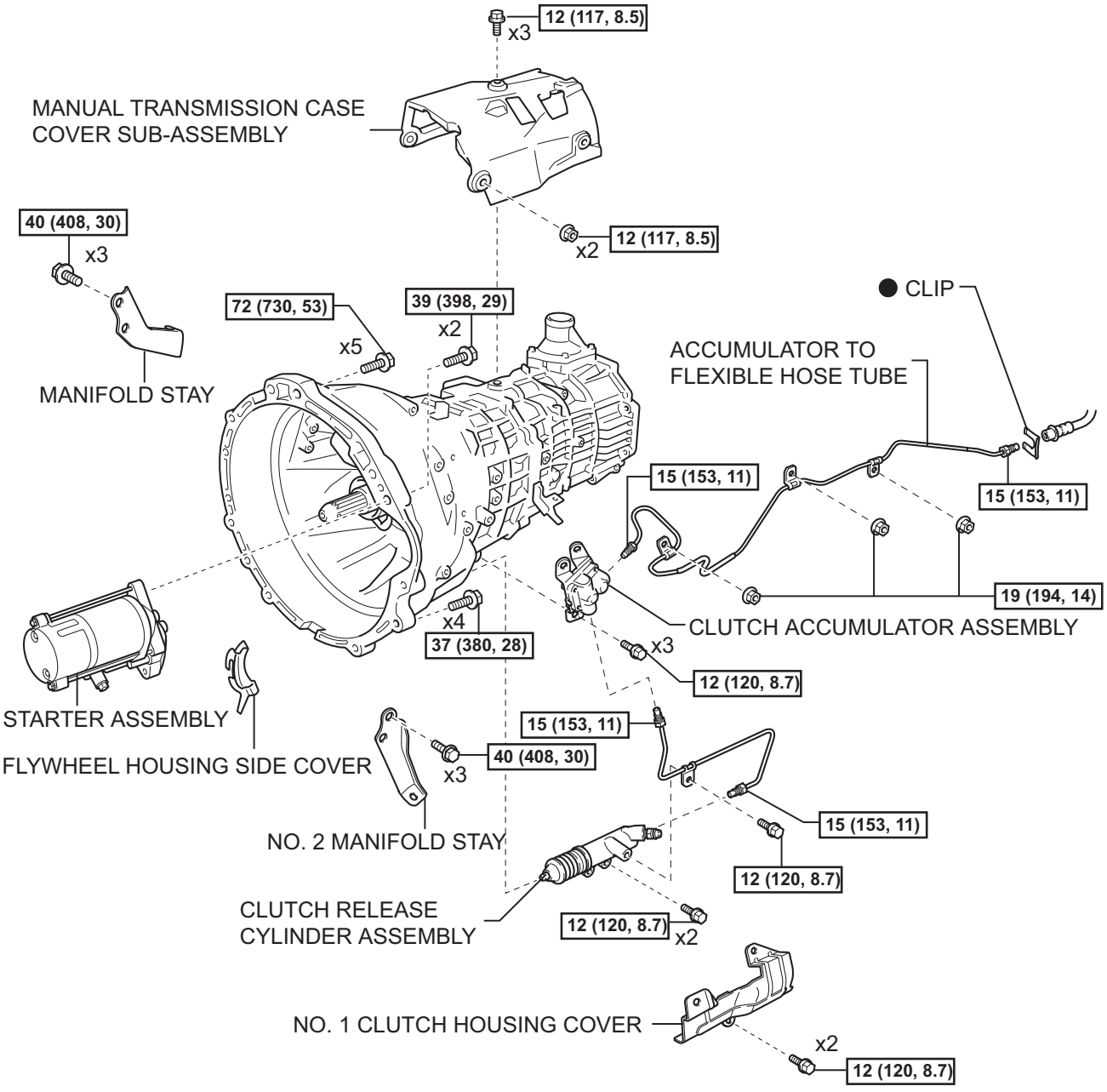

MT

N*m (kgf*cm, ft*lbf) :Specified torque

● Non-reusable part

Y

C133796E01

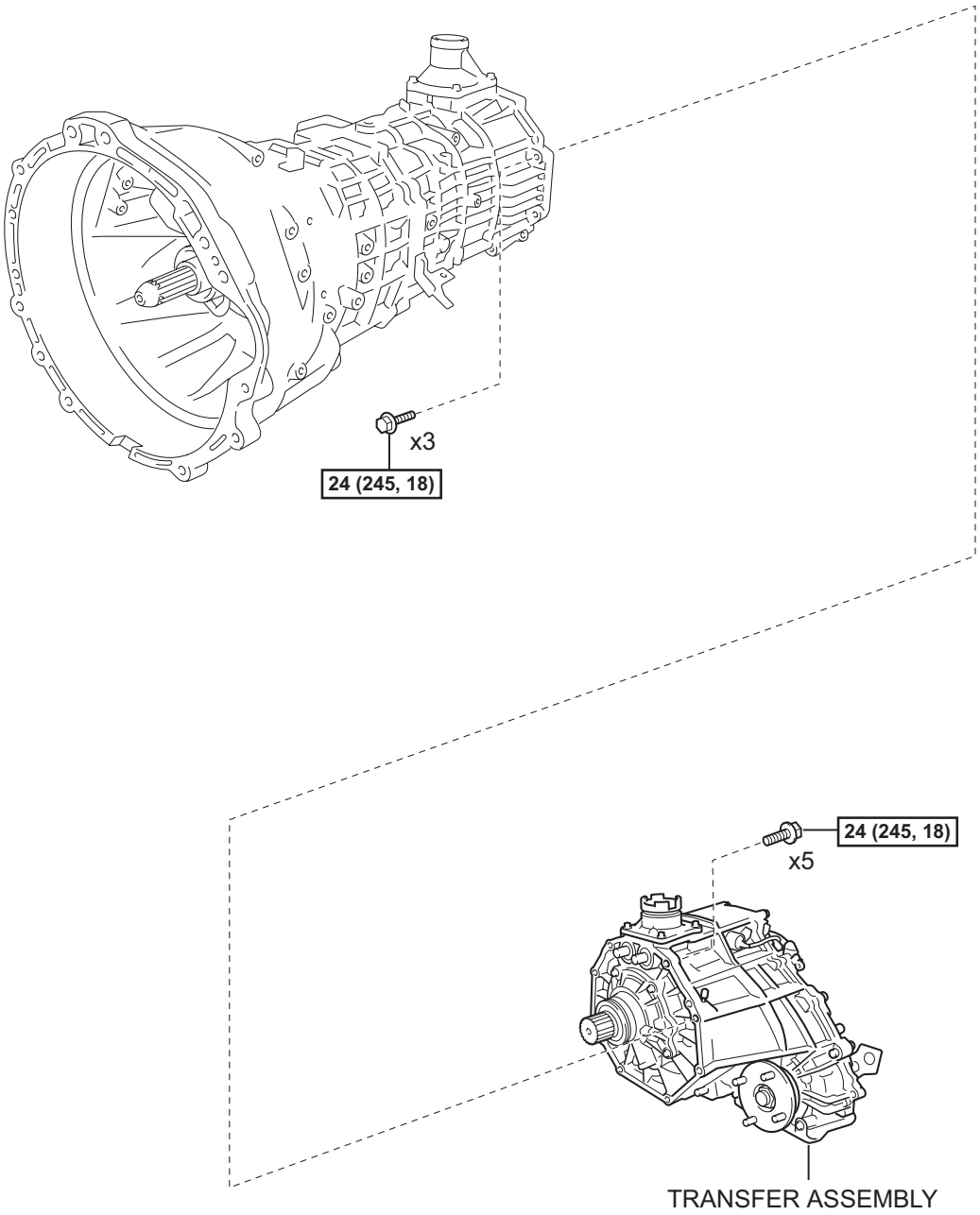

N*m (kgf*cm, ft*lbf) :Specified torque

Y

C133793E01

MT

REMOVAL

1. **DISCONNECT CABLE FROM NEGATIVE BATTERY TERMINAL**
2. **REMOVE PARKING BRAKE HOLE COVER SUB-ASSEMBLY (See page IP-11)**
3. **REMOVE CONSOLE UPPER REAR PANEL SUB-ASSEMBLY (See page IP-12)**
4. **REMOVE FRONT CONSOLE BOX (See page IP-12)**
5. **REMOVE SHIFT LEVER KNOB SUB-ASSEMBLY (for Transfer)**
6. **REMOVE SHIFT LEVER KNOB SUB-ASSEMBLY (for Manual Transmission)**
7. **REMOVE SHIFT LEVER BOOT ASSEMBLY**
   (a) Remove the 4 screws and 2 clips, then remove the shift lever boot.

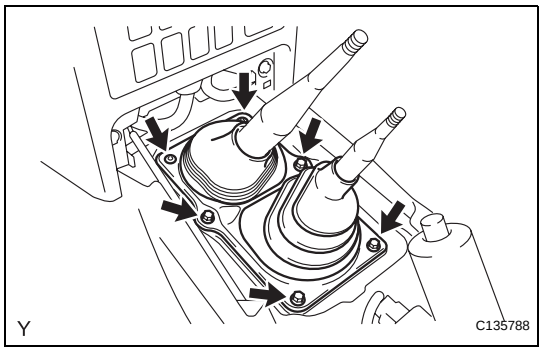

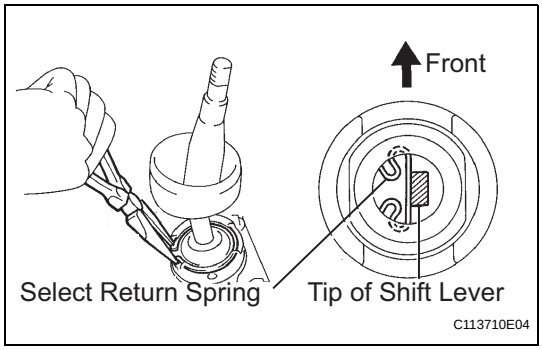

8. **REMOVE TRANSFER HIGH AND LOW SHIFT LEVER ASSEMBLY**
   (a) Using needle-nose pliers, remove the snap ring and pull out the shift lever from the shift lever retainer.

MT

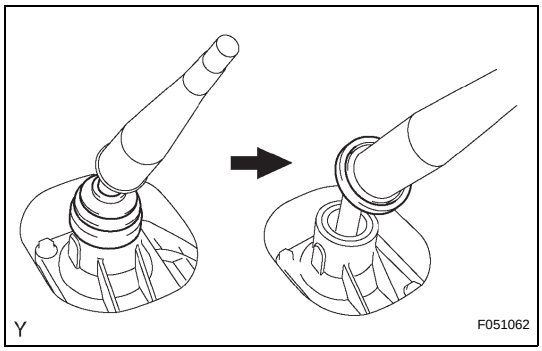

9. **REMOVE FLOOR SHIFT SHIFT LEVER ASSEMBLY**
   (a) Separate the shift lever cap boot from the manual transmission.

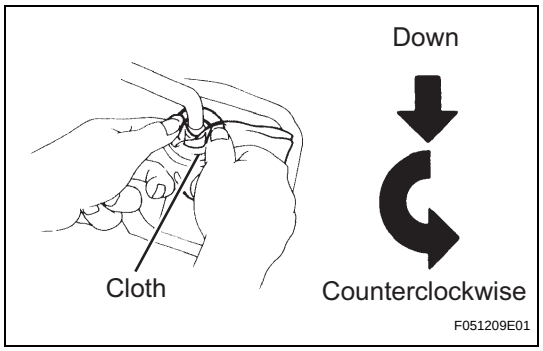

(b) Cover the shift lever cap with a cloth.
(c) Pressing down on the shift lever cap, turn it counterclockwise to remove the shift lever.
(d) Pull out the shift lever.

10. DRAIN MANUAL TRANSMISSION OIL

(a) Remove the drain plug and gasket and then drain the manual transmission oil.
(b) Install a new gasket and drain plug.
Torque: 37 N*m (377 kgf*cm, 27 ft.*lbf)

11. REMOVE NO. 2 FRONT EXHAUST PIPE ASSEMBLY (See page EX-4)

12. REMOVE FRONT EXHAUST PIPE ASSEMBLY (See page EX-4)

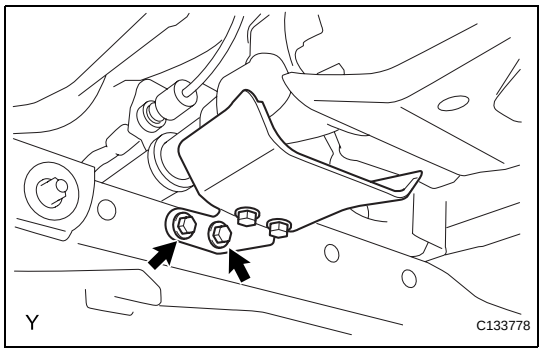

13. REMOVE PROPELLER SHAFT HEAT INSULATOR

(a) Remove the 2 bolts and remove the propeller shaft heat insulator.

14. REMOVE FRONT PROPELLER SHAFT ASSEMBLY (See page PR-2)

15. REMOVE PROPELLER SHAFT ASSEMBLY (See page PR-9)

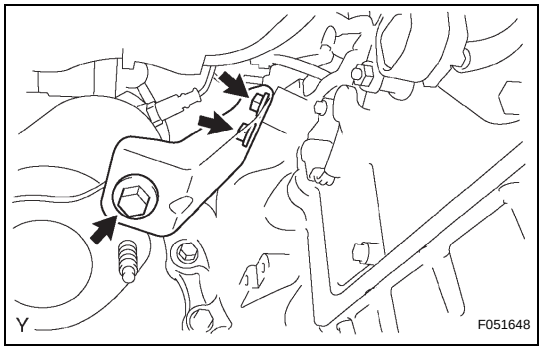

16. REMOVE NO. 2 MANIFOLD STAY

(a) Remove the 3 bolts and remove the No. 2 manifold stay.

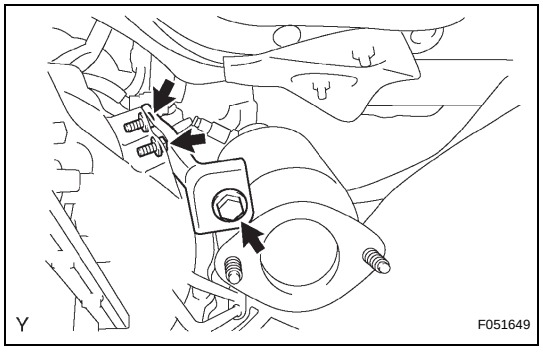

17. REMOVE MANIFOLD STAY

(a) Remove the 3 bolts and remove the manifold stay.

18. REMOVE STARTER ASSEMBLY (See page ST-7)

MT

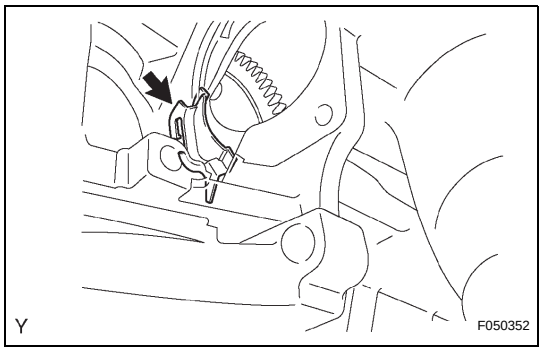

19. REMOVE FLYWHEEL HOUSING SIDE COVER

(a) Remove the flywheel housing side cover from the cylinder block.

20. REMOVE NO. 1 CLUTCH HOUSING COVER (See page CL-16)

21. REMOVE CLUTCH RELEASE CYLINDER ASSEMBLY (See page CL-16)

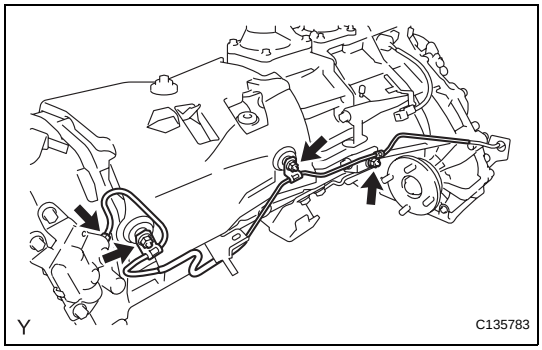

22. REMOVE ACCUMULATOR TO FLEXIBLE HOSE TUBE

(a) Using SST, disconnect the hose tube. (for accumulator side)
SST 09023-00101

(b) Remove the 3 nuts and disconnect the hose tube.

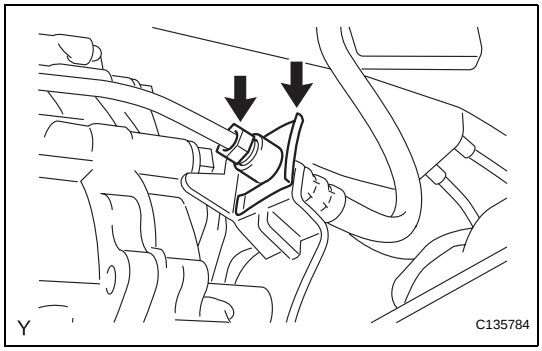

(c) Using SST, disconnect the hose tube. (for flexible hose side)
SST 09023-00101

(d) Remove the clip

23. REMOVE CLUTCH ACCUMULATOR ASSEMBLY (See page CL-19)

24. SUPPORT MANUAL TRANSMISSION WITH TRANSFER

(a) Support the manual transmission with a transmission jack.

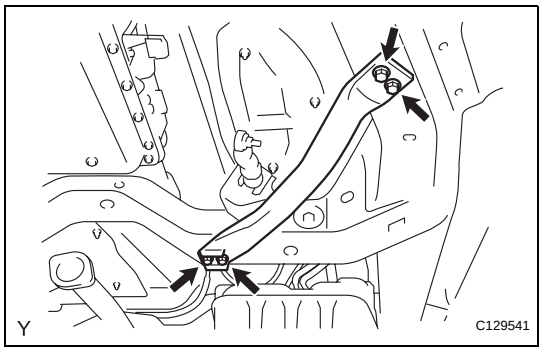

25. REMOVE FRONT SUSPENSION MEMBER BRACKET LH

(a) Remove the 4 bolts and remove the front suspension member bracket LH.

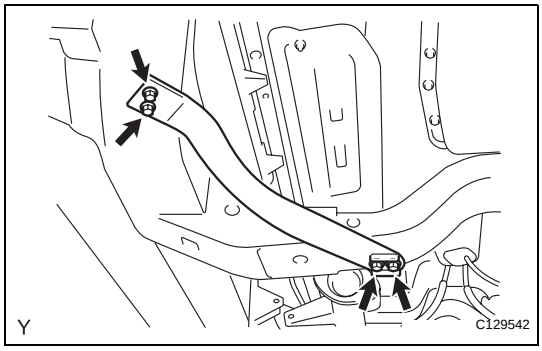

26. REMOVE FRONT SUSPENSION MEMBER BRACKET

(a) Remove the 4 bolts and remove the front suspension member bracket RH.

MT

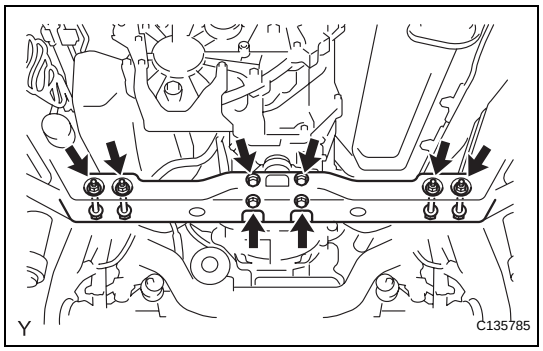

27. REMOVE NO. 3 FRAME CROSSMEMBER SUB-ASSEMBLY

(a) Remove the 4 bolts from the No. 3 frame crossmember sub-assembly.

(b) Remove the 4 nuts and 4 bolts and remove the No. 3 frame crossmember sub-assembly.

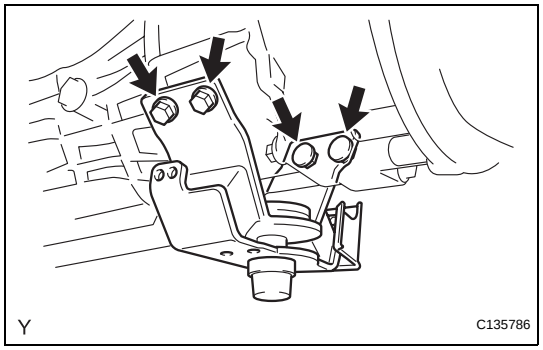

28. REMOVE REAR NO. 1 ENGINE MOUNTING INSULATOR

(a) Remove the 4 bolts and engine mounting insulator rear from the manual transmission.

29. DISCONNECT CONNECTOR

(a) Tilt down the transmission.

(b) Disconnect the 2 transfer indicator switch connectors.

(c) Disconnect the speedometer sensor connector.

(d) Disconnect the back-up light switch connector.

30. DISCONNECT WIRE HARNESS

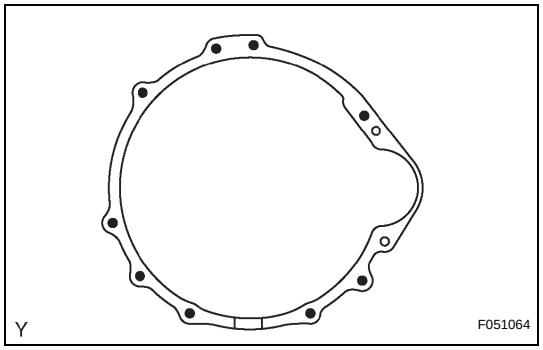

31. REMOVE MANUAL TRANSMISSION WITH TRANSFER

(a) Remove the 9 bolts.

(b) Separate and remove the manual transmission.

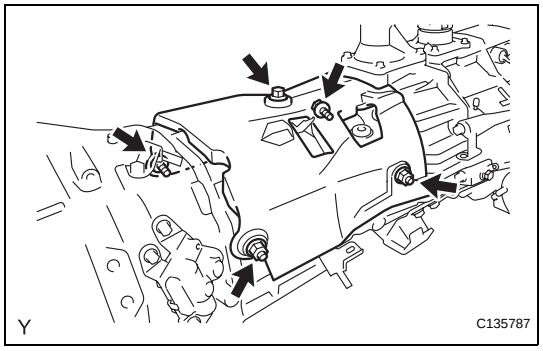

32. REMOVE MANUAL TRANSMISSION CASE COVER SUB-ASSEMBLY

(a) Remove the 3 bolts and 2 nuts and remove the manual transmission case cover.

33. REMOVE TRANSFER ASSEMBLY (See page TF-18)

MT

INSTALLATION

1. **INSTALL TRANSFER ASSEMBLY (See page TF-43)**

2. **INSTALL MANUAL TRANSMISSION CASE COVER SUB-ASSEMBLY**
   (a) Install the manual transmission case cover with the 3 bolts and 2 nuts.
   Torque: 12 N*m (117 kgf*cm, 8.5 ft.*lbf)

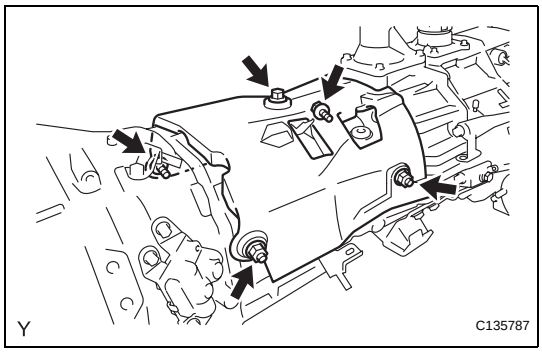

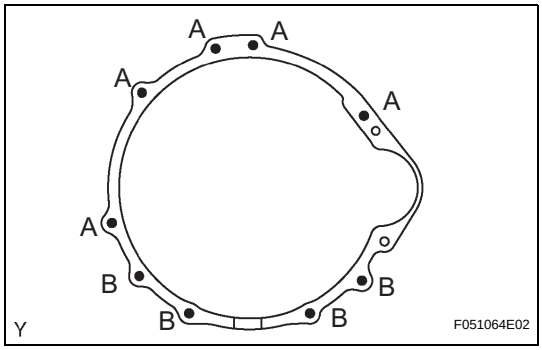

3. **INSTALL MANUAL TRANSMISSION WITH TRANSFER**
   (a) Install the manual transmission with transfer with the 9 bolts.
   Torque: 72 N*m (730 kgf*cm, 53 ft.*lbf) for bolt A
   37 N*m (380 kgf*cm, 28 ft.*lbf) for bolt B

4. **CONNECT WIRE HARNESS**

5. **CONNECT CONNECTOR**
   (a) Connect the back-up light switch connector.
   (b) Connect the speedometer sensor connector.
   (c) Connect the 2 transfer indicator switch connectors.

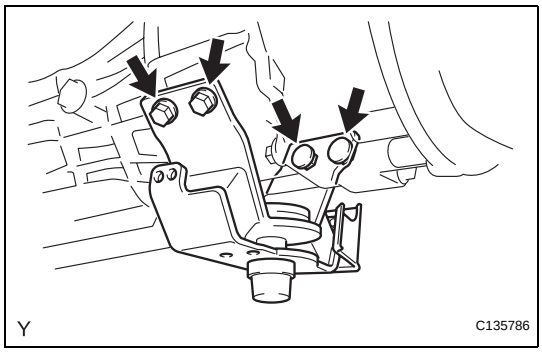

6. **INSTALL REAR NO. 1 ENGINE MOUNTING INSULATOR**
   (a) Install engine mounting insulator rear No. 1 with the 4 bolts.
   Torque: 65 N*m (663 kgf*cm, 48 ft.*lbf)

MT

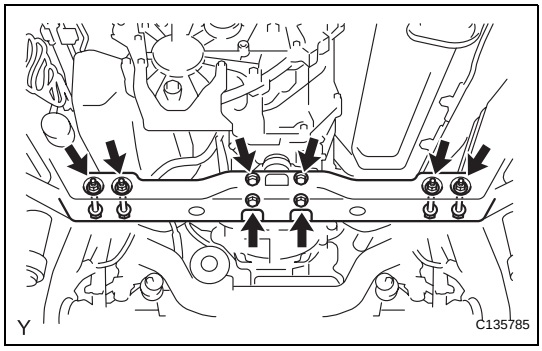

7. **INSTALL NO. 3 FRAME CROSSMEMBER SUB-ASSEMBLY**
   (a) Install the No. 3 frame crossmember sub-assembly with the 4 bolts and 4 nuts.
   Torque: 72 N*m (734 kgf*cm, 53 ft.*lbf)
   (b) Install the No. 3 frame crossmember sub-assembly with the 4 bolts.
   Torque: 19 N*m (189 kgf*cm, 14 ft.*lbf)

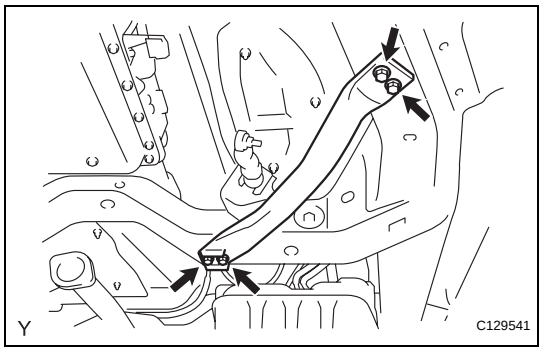

8. **INSTALL FRONT SUSPENSION MEMBER BRACKET LH**
   (a) Install the front suspension member bracket LH with the 4 bolts.
   Torque: 33 N*m (336 kgf*cm, 24 ft.*lbf)

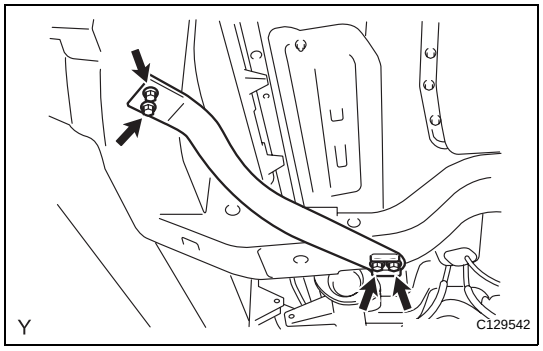

9. **INSTALL FRONT SUSPENSION MEMBER BRACKET**
   (a) Install the front suspension member bracket RH with the 4 bolts.
   Torque: 33 N*m (336 kgf*cm, 24 ft.*lbf)

10. **INSTALL CLUTCH ACCUMULATOR ASSEMBLY (See page CL-20)**

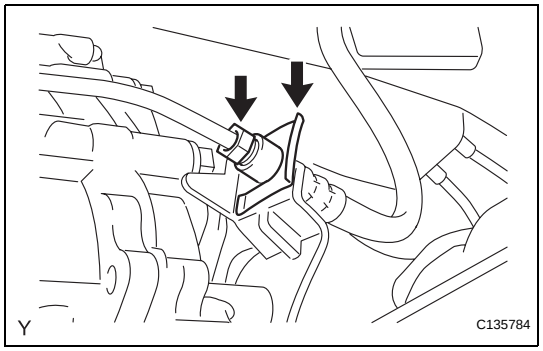

11. **INSTALL ACCUMULATOR TO FLEXIBLE HOSE TUBE**
   (a) Using SST, connect the hose tube. (for flexible hose side)
   SST 09023-00101
   Torque: 15 N*m (153 kgf*cm, 11 ft.*lbf)
   (b) Install a new clip.

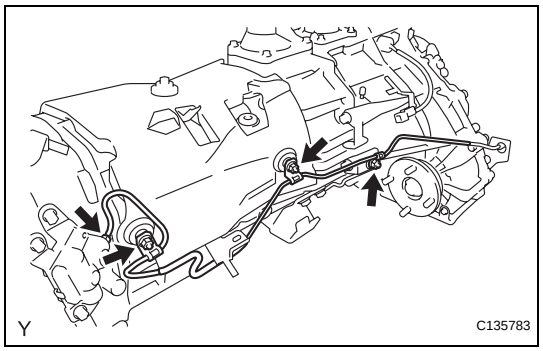

   (c) Using SST, connect the hose tube. (for accumulator side)
   SST 09023-00101
   Torque: 15 N*m (153 kgf*cm, 11 ft.*lbf)
   (d) Install the 3 nuts and connect the hose tube.
   Torque: 19 N*m (194 kgf*cm, 14 ft.*lbf)

12. **INSTALL CLUTCH RELEASE CYLINDER ASSEMBLY (See page CL-17)**

13. **INSTALL NO. 1 CLUTCH HOUSING COVER (See page CL-17)**

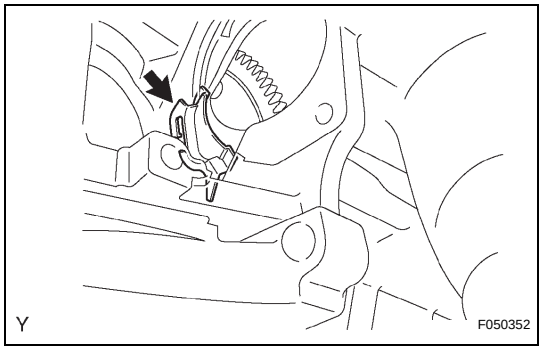

14. **INSTALL FLYWHEEL HOUSING SIDE COVER**
   (a) Install the flywheel housing side cover onto the cylinder block.

15. **INSTALL STARTER ASSEMBLY (See page ST-15)**

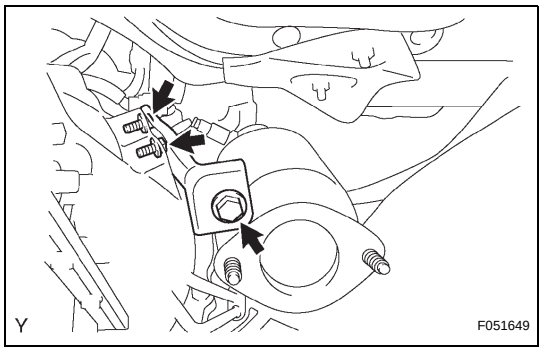

16. **INSTALL MANIFOLD STAY**
    (a) Install the manifold stay with the 3 bolts.
    Torque: 40 N*m (408 kgf*cm, 30 ft.*lbf)

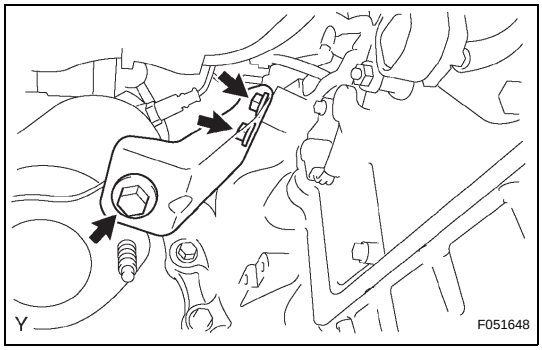

17. **INSTALL NO. 2 MANIFOLD STAY**
    (a) Install the No. 2 manifold stay with the 3 bolts.
    Torque: 40 N*m (408 kgf*cm, 30 ft.*lbf)
18. **INSTALL PROPELLER SHAFT ASSEMBLY (See page PR-14)**
19. **INSTALL FRONT PROPELLER SHAFT ASSEMBLY (See page PR-6)**

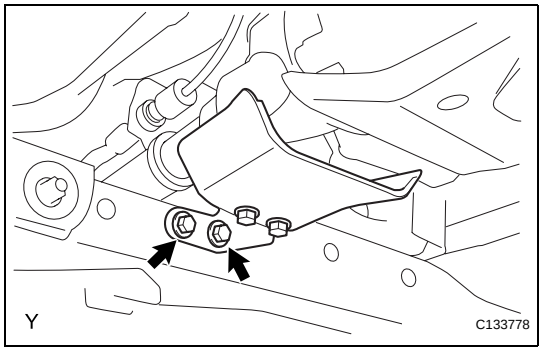

20. **INSTALL PROPELLER SHAFT HEAT INSULATOR**
    (a) Install the propeller shaft heat insulator with the 2 bolts.
    Torque: 16 N*m (160 kgf*cm, 12 ft.*lbf)
21. **INSTALL FRONT EXHAUST PIPE ASSEMBLY (See page EX-4)**
22. **INSTALL NO. 2 FRONT EXHAUST PIPE ASSEMBLY (See page EX-5)**
23. **ADD MANUAL TRANSMISSION OIL**
24. **ADJUST MANUAL TRANSMISSION OIL (See page MT-2)**

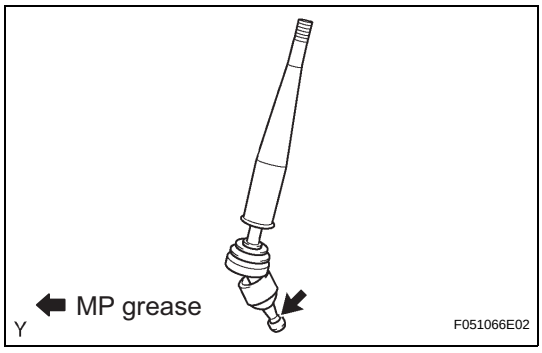

25. **INSTALL FLOOR SHIFT SHIFT LEVER ASSEMBLY**
    (a) Apply MP grease to the tip of the shift lever.

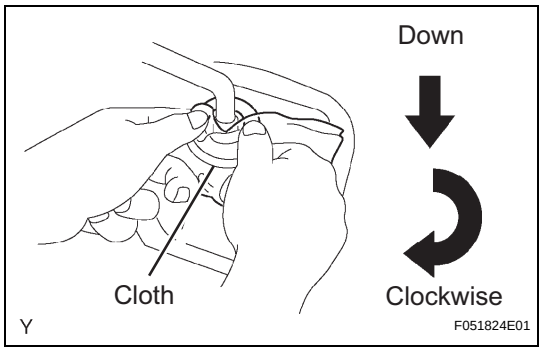

(b) Cover the shift lever cap with a cloth.
(c) Pressing down on the shift lever cap, turn it clockwise to install the shift lever.

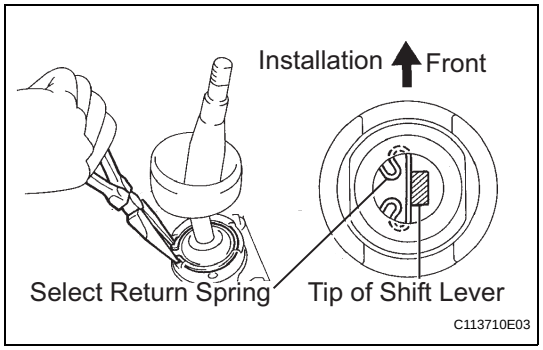

26. REMOVE TRANSFER HIGH AND LOW SHIFT LEVER ASSEMBLY
(a) Install the transfer shift lever onto the shift lever retainer.
(b) Using needle-nose pliers, install the snap ring.

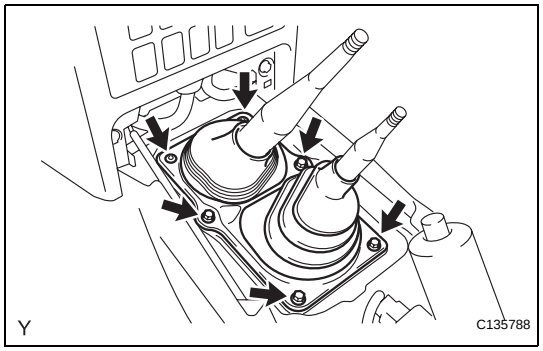

27. INSTALL SHIFT LEVER BOOT ASSEMBLY
(a) Install the shift lever boot with the 4 screws and 2 clips.

28. INSTALL SHIFT LEVER KNOB SUB-ASSEMBLY (for Manual transmission)

29. INSTALL SHIFT LEVER KNOB SUB-ASSEMBLY (for Transfer)

30. INSTALL FRONT CONSOLE BOX (See page IP-31)

31. INSTALL CONSOLE UPPER REAR PANEL SUB-ASSEMBLY (See page IP-31)

32. INSTALL PARKING BRAKE HOLE COVER SUB-ASSEMBLY (See page IP-32)

33. CONNECT CABLE TO NEGATIVE BATTERY TERMINAL
Torque: 3.9 N*m (40 kgf*cm, 35 in.*lbf)

34. CHECK FOR EXHAUST GAS LEAKAGE

MANUAL TRANSMISSION UNIT

COMPONENTS

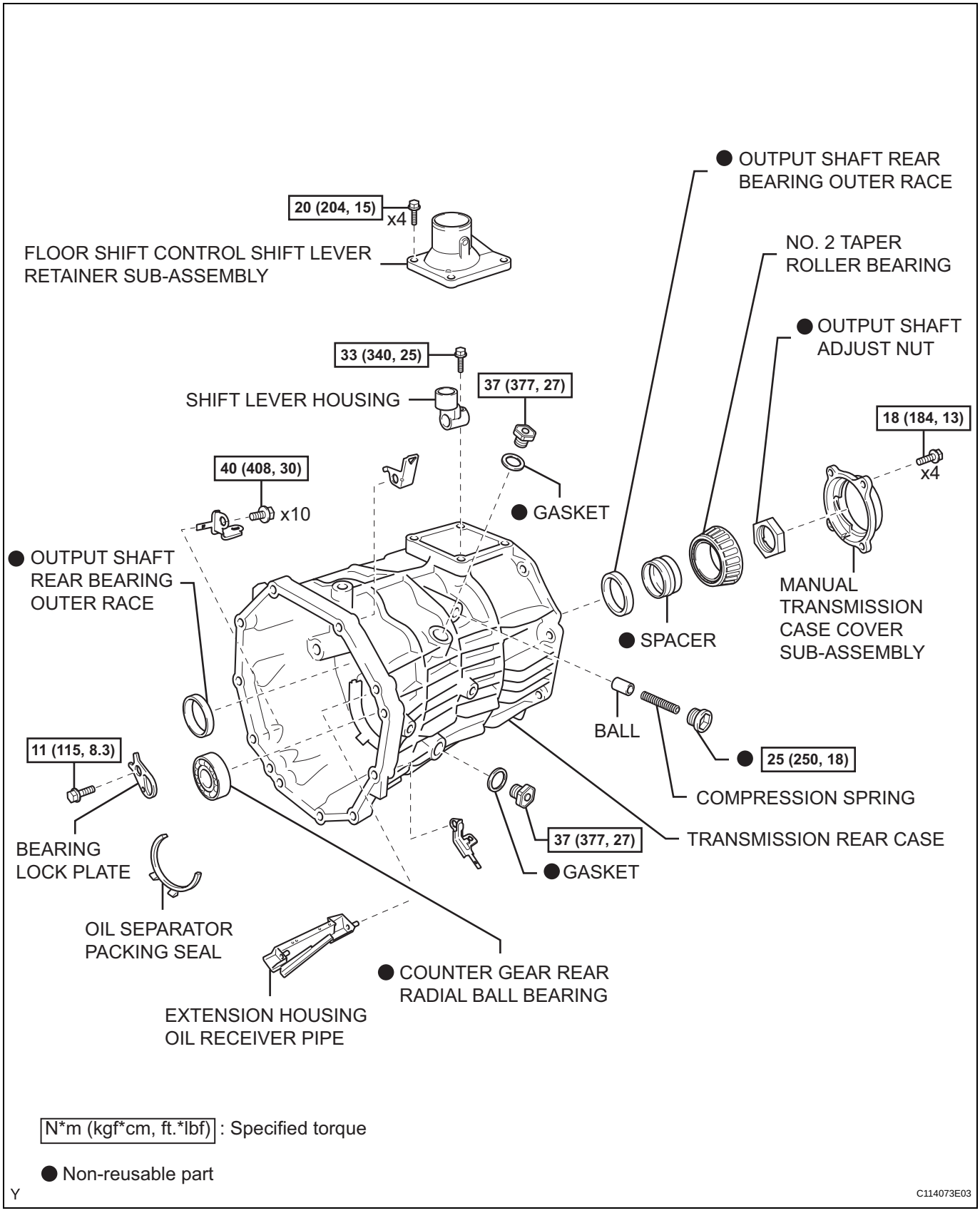

MT

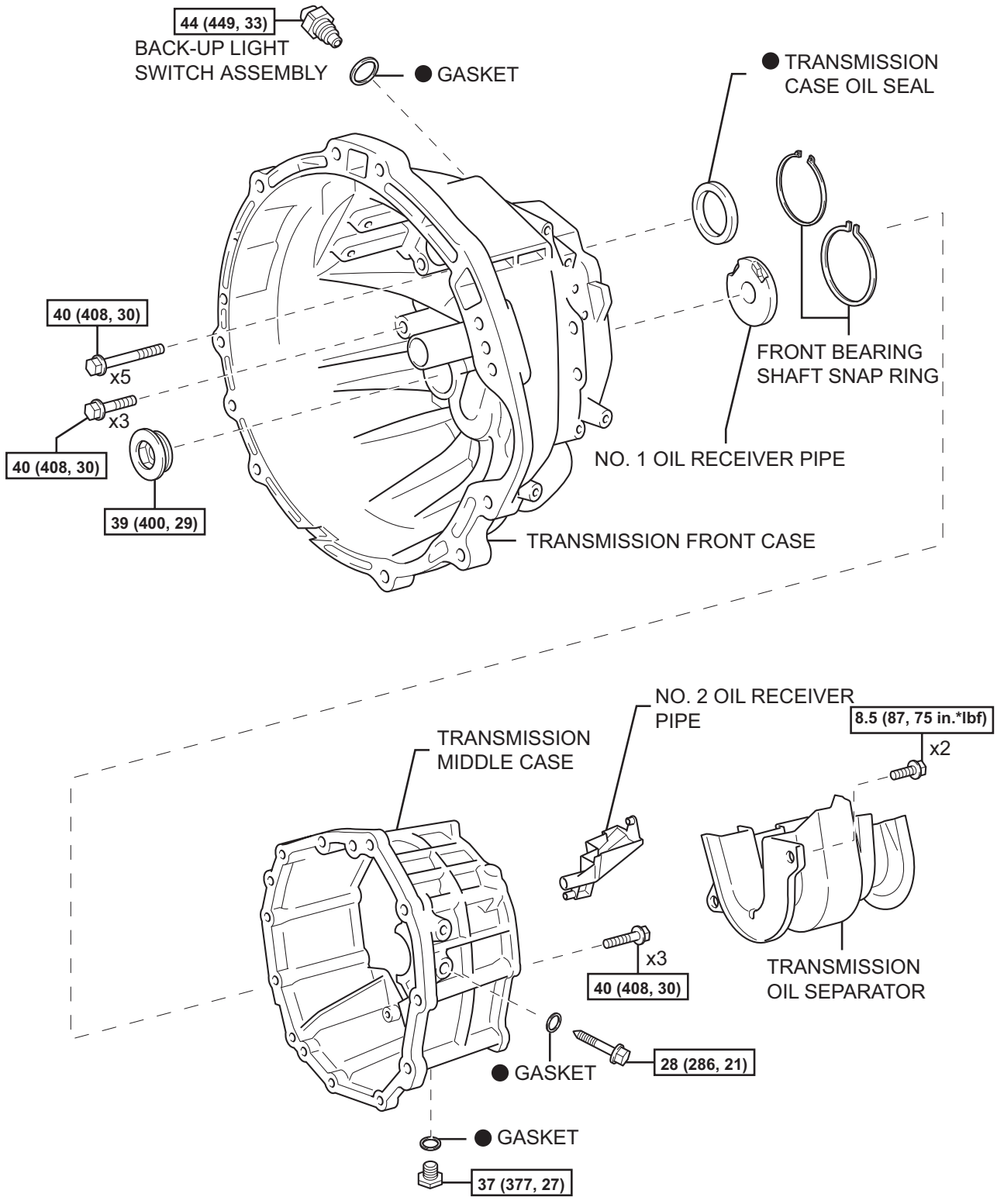

N*m (kgf*cm, ft.*lbf) : Specified torque

● Non-reusable part

Y

C114219E05

MT

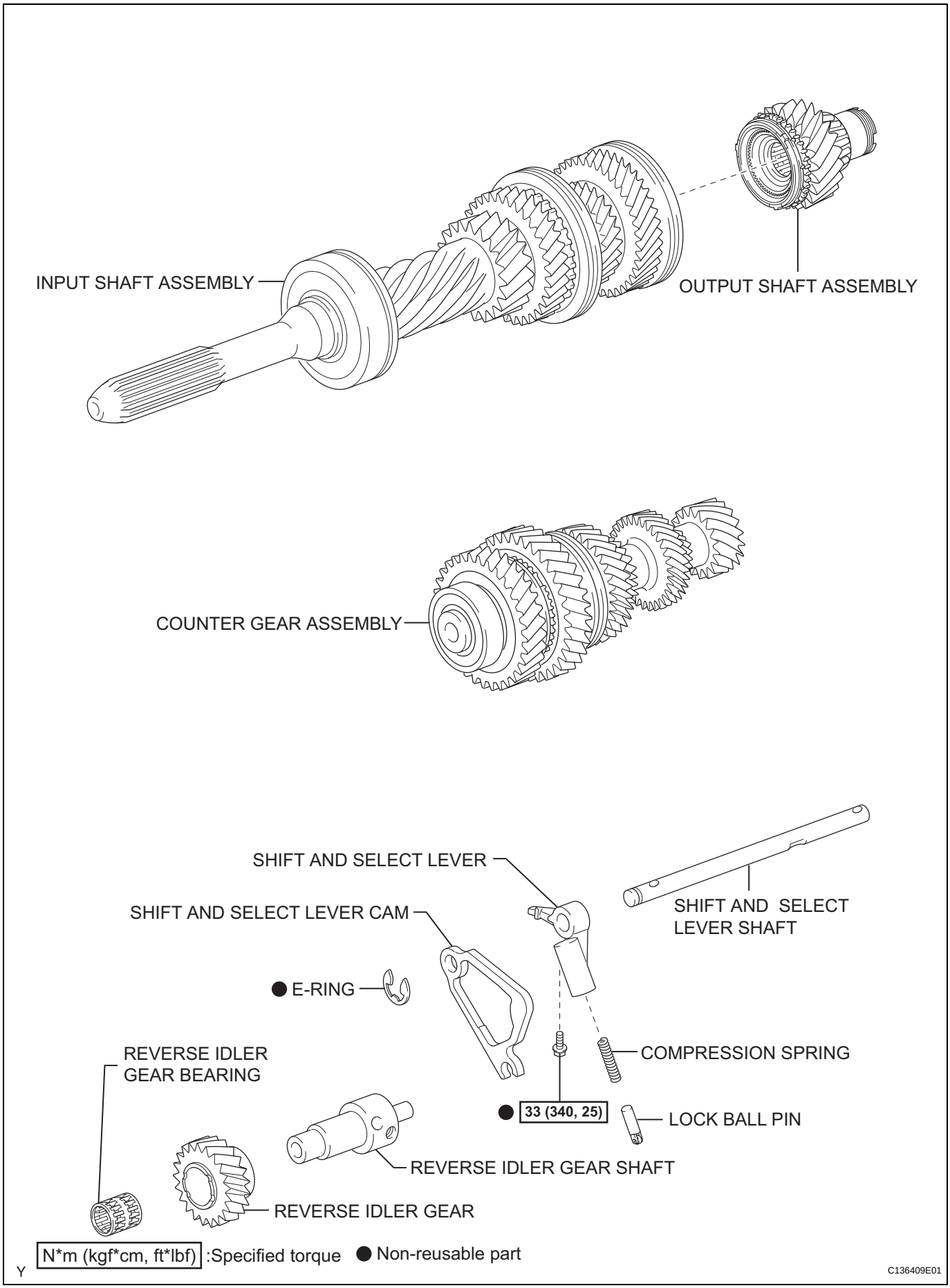
INPUT SHAFT ASSEMBLY
OUTPUT SHAFT ASSEMBLY
COUNTER GEAR ASSEMBLY
SHIFT AND SELECT LEVER
SHIFT AND SELECT LEVER CAM
SHIFT AND SELECT LEVER SHAFT
● E-RING
REVERSE IDLER GEAR BEARING
COMPRESSION SPRING
● 33 (340, 25)
LOCK BALL PIN
REVERSE IDLER GEAR SHAFT
REVERSE IDLER GEAR
N*m (kgf*cm, ft*lbf) :Specified torque ● Non-reusable part
C136409E01

MT

Y

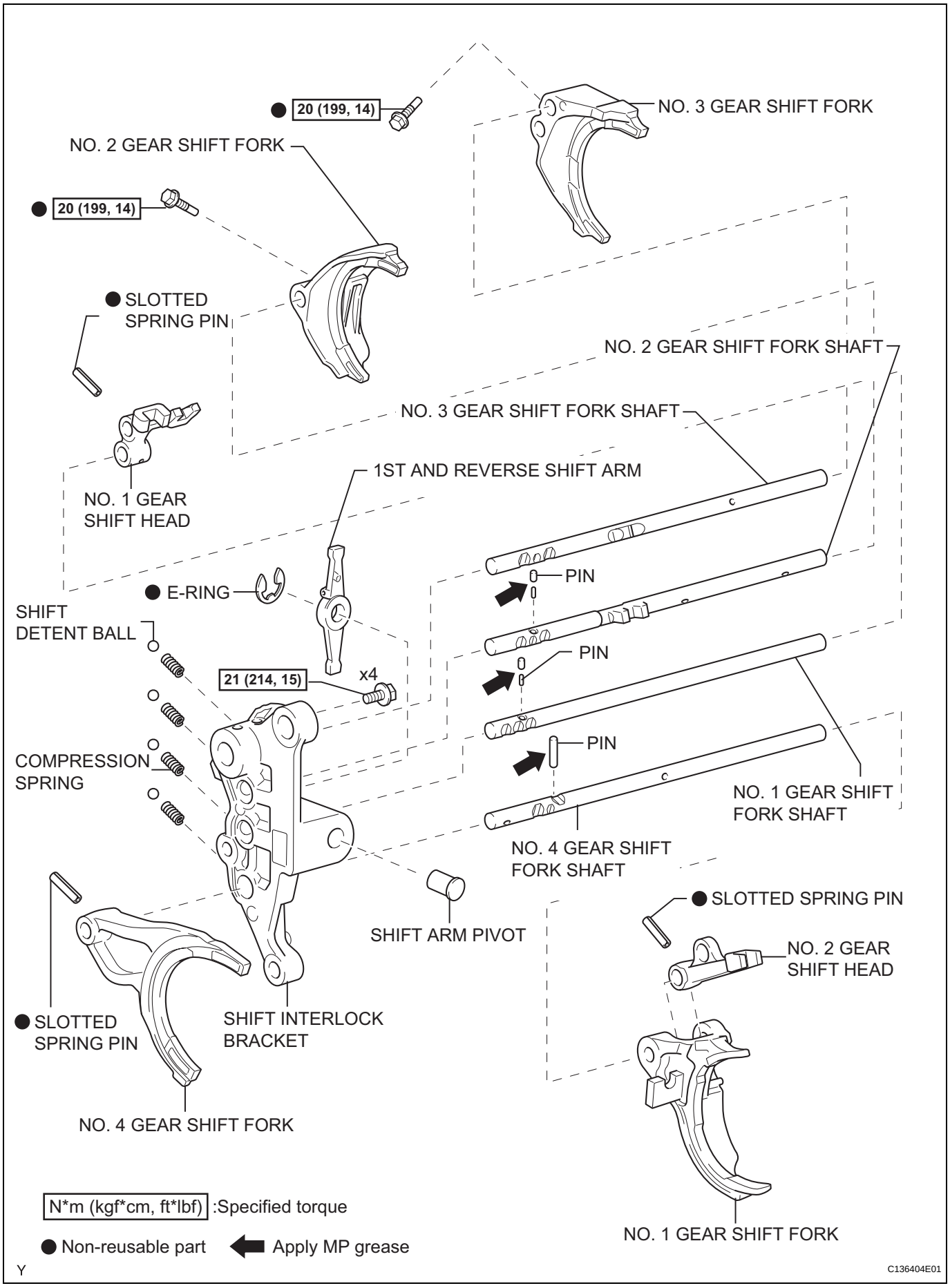
20 (199, 14)
NO. 3 GEAR SHIFT FORK
NO. 2 GEAR SHIFT FORK
20 (199, 14)
SLOTTED SPRING PIN
NO. 2 GEAR SHIFT FORK SHAFT
NO. 3 GEAR SHIFT FORK SHAFT
1ST AND REVERSE SHIFT ARM
NO. 1 GEAR SHIFT HEAD
E-RING
PIN
SHIFT DETENT BALL
PIN
21 (214, 15)
x4
PIN
COMPRESSION SPRING
NO. 1 GEAR SHIFT FORK SHAFT
NO. 4 GEAR SHIFT FORK SHAFT
SLOTTED SPRING PIN
SHIFT ARM PIVOT
NO. 2 GEAR SHIFT HEAD
SLOTTED SPRING PIN
SHIFT INTERLOCK BRACKET
NO. 4 GEAR SHIFT FORK
NO. 1 GEAR SHIFT FORK
N*m (kgf*cm, ft*lbf) :Specified torque
Non-reusable part
Apply MP grease
Y
C136404E01

MT

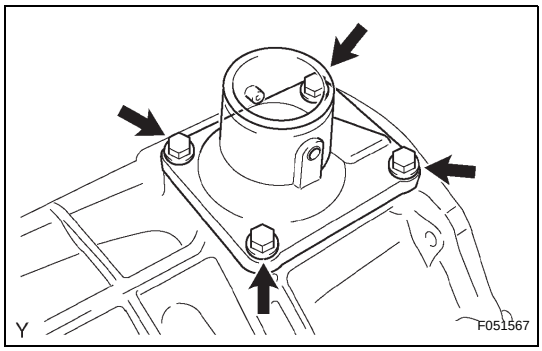

DISASSEMBLY

1. REMOVE FLOOR SHIFT CONTROL SHIFT LEVER RETAINER SUB-ASSEMBLY

(a) Remove the 4 bolts, then remove the floor shift control shift lever retainer.

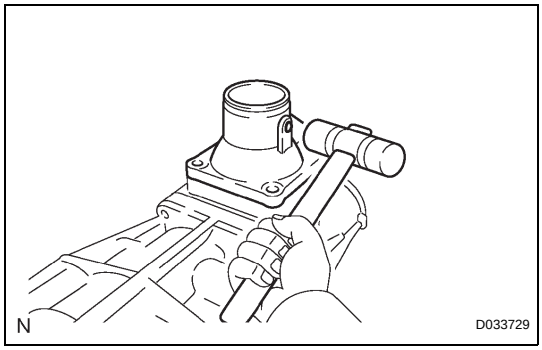

(b) Using a plastic hammer, remove the floor shift control shift lever retainer.

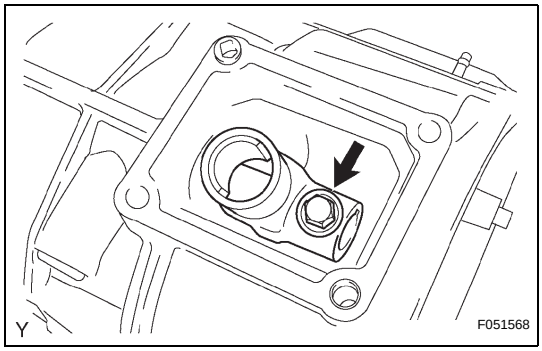

2. REMOVE SHIFT LEVER HOUSING

(a) Remove the bolt, then separate the shift lever housing.

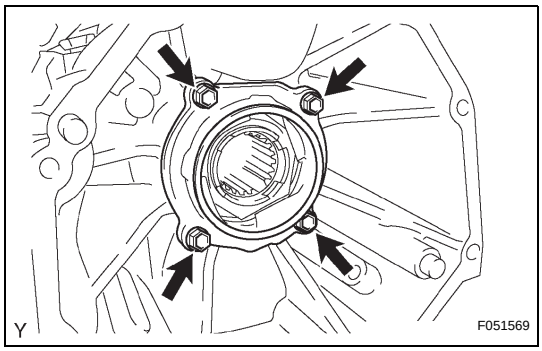

3. REMOVE MANUAL TRANSMISSION CASE COVER SUB-ASSEMBLY

(a) Remove the 4 bolts, then remove the transmission case cover.

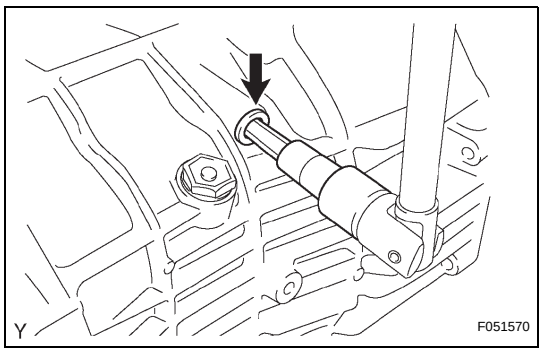

4. REMOVE SHIFT DETENT BALL PLUG

(a) Using a socket hexagon wrench (10 mm), remove the shift detent ball plug from the transmission rear case.

(b) Remove the ball and compression spring from the transmission rear case.

MT

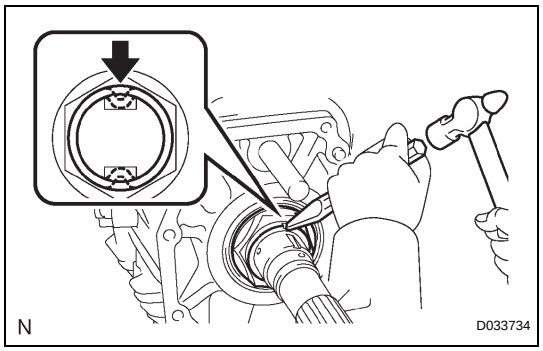

5. REMOVE OUTPUT SHAFT ADJUST NUT

(a) Using a chisel and hammer, unstake the nut.

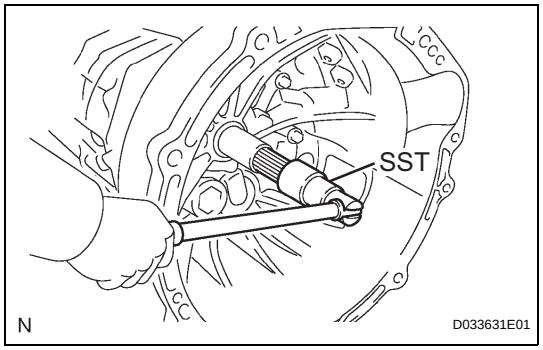

(b) Place the gearshift into 5th gear, and then fix the input shaft using SST.
SST 09556-16030

(c) Using a belt and wooden block, fasten the transmission to the workbench.

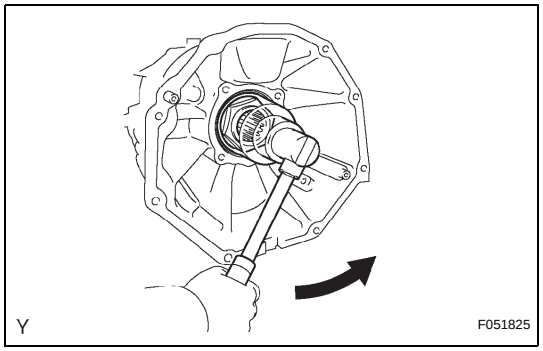

(d) Using a socket wrench (60 mm), remove the nut from the transmission rear case.

(e) Remove the belt and wooden block from the transmission.

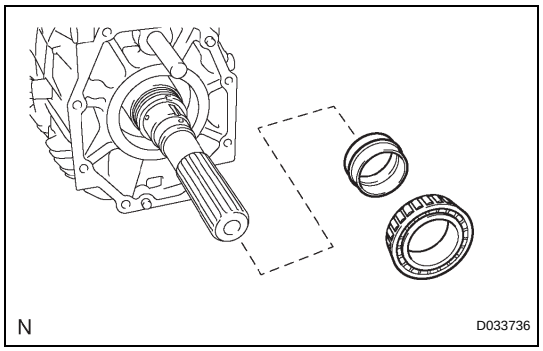

(f) Remove taper roller bearing No. 2 and the spacer.

MT

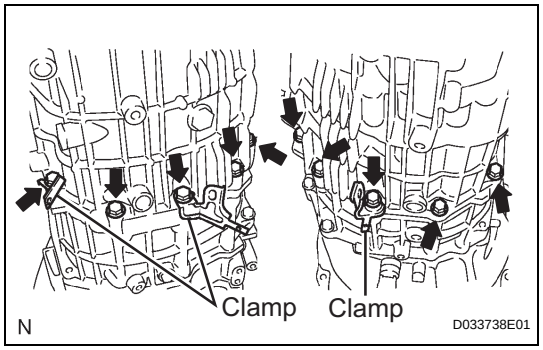

6. REMOVE TRANSMISSION REAR CASE

(a) Remove the 10 bolts and 3 clamps.

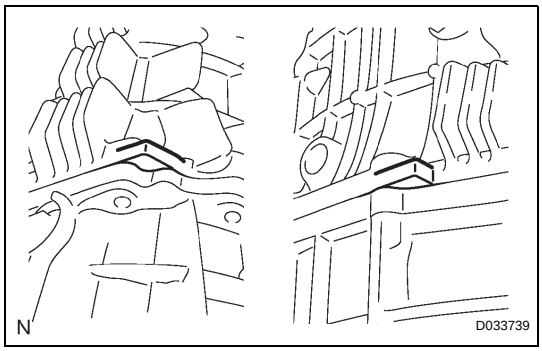

(b) Using a plastic hammer, carefully tap out the rear case.
HINT:
Place the brass bar against the rib portion of the case.

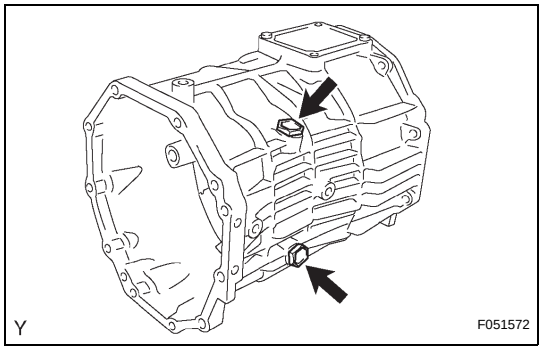

7. REMOVE MANUAL TRANSMISSION FILLER PLUG

(a) Remove the 2 transmission filler plugs and 2 gaskets from the transmission rear case.

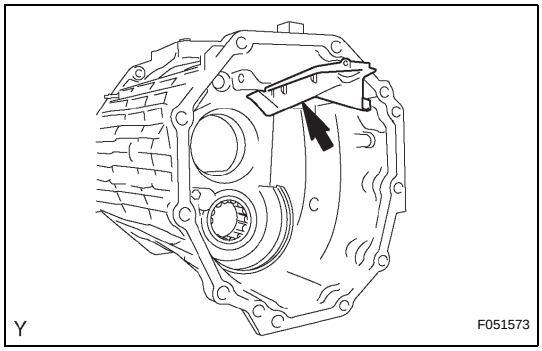

8. REMOVE EXTENSION HOUSING OIL RECEIVER PIPE

(a) Remove the extension housing oil receiver pipe from the transmission rear case.

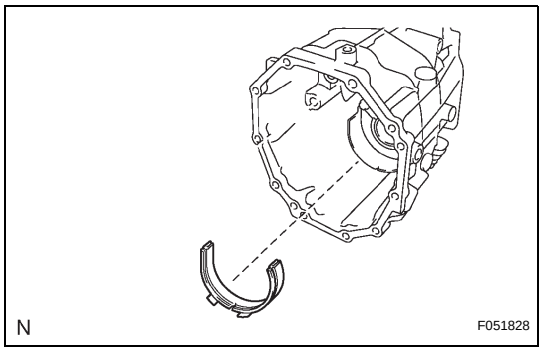

9. REMOVE OIL SEPARATOR PACKING SEAL

(a) Remove the oil separator packing seal from the transmission rear case.

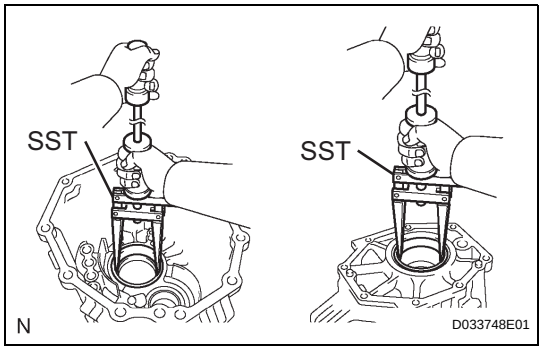

10. REMOVE OUTPUT SHAFT REAR BEARING OUTER RACE

(a) Using SST, remove the 2 bearing outer races.
SST 09308-00010

MT

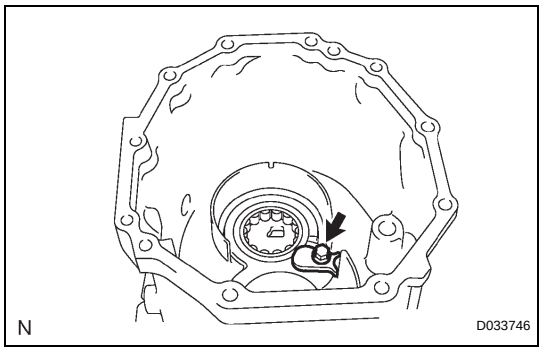

11. REMOVE COUNTER GEAR REAR RADIAL BALL BEARING

(a) Remove the bolt, then remove the bearing lock plate.

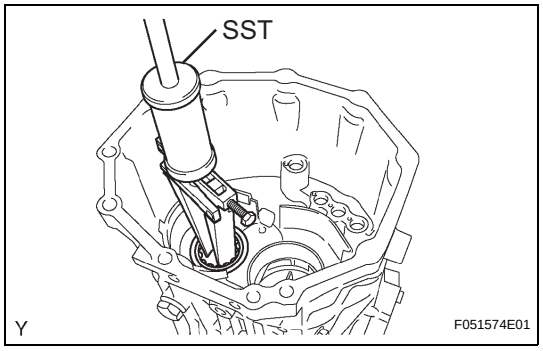

(b) Using SST, remove the counter gear rear radial ball bearing from the transmission rear case.
SST 09308-00010

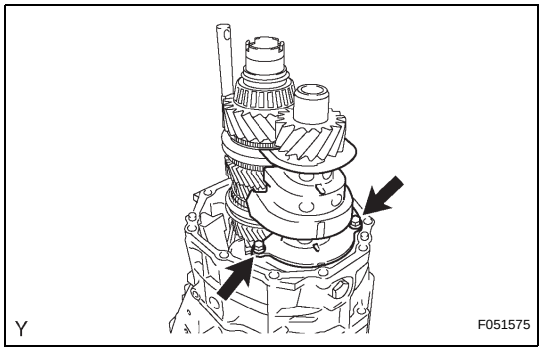

12. REMOVE TRANSMISSION OIL SEPARATOR

(a) Remove the 2 bolts, then remove the oil separator.

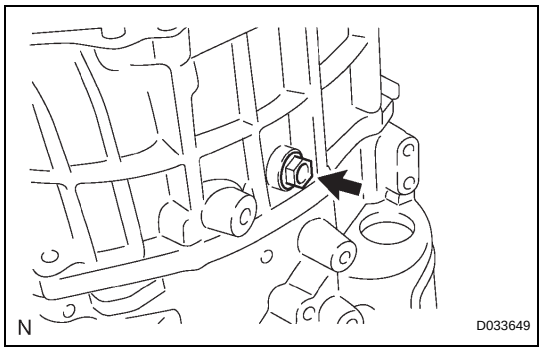

13. REMOVE REVERSE IDLER GEAR SHAFT BOLT

(a) Remove the reverse idler gear shaft bolt from the transmission middle case.

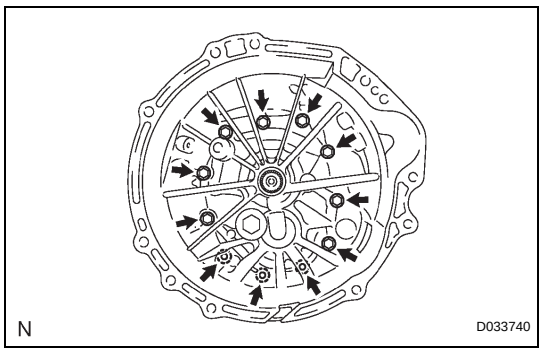

14. REMOVE TRANSMISSION MIDDLE CASE

(a) Remove the 11 bolts, then remove the transmission middle case.

MT

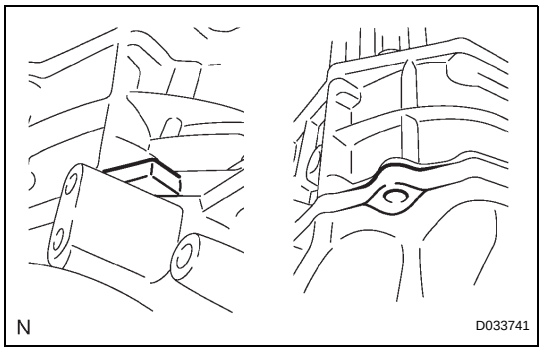

(b) Using a plastic hammer, carefully tap out the middle case.
HINT:
Place the brass bar against the rib portion of the case.

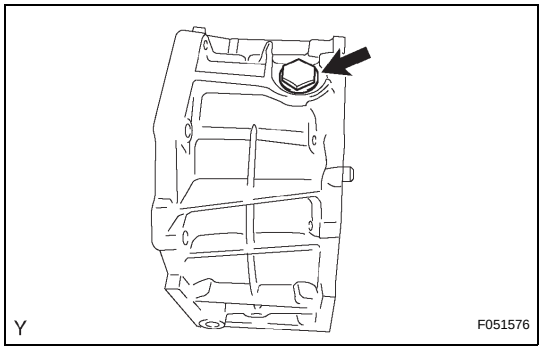

15. REMOVE DRAIN PLUG SUB-ASSEMBLY

(a) Remove the drain plug and gasket from the transmission middle case.

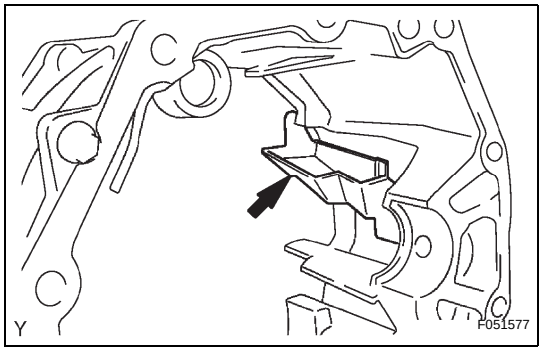

16. REMOVE NO. 2 OIL RECEIVER PIPE

(a) Remove the No. 2 oil receiver pipe from the transmission middle case.

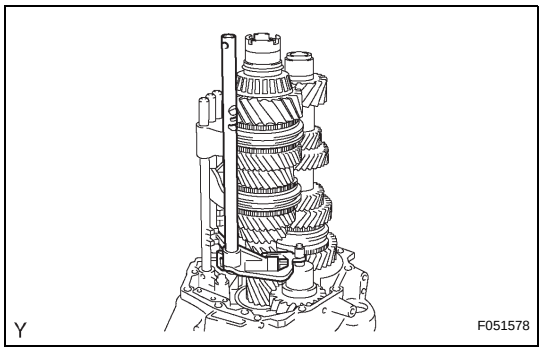

17. REMOVE SHIFT AND SELECT LEVER SHAFT

(a) Remove the shift and select lever shaft from the reverse gear shaft.

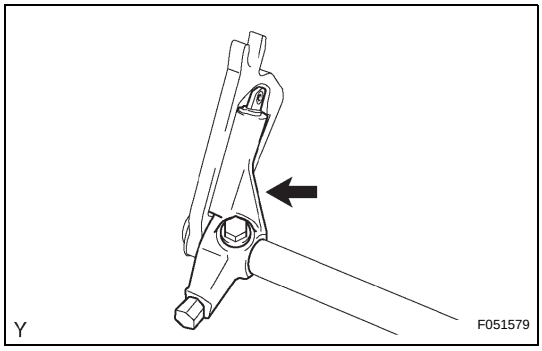

18. REMOVE SHIFT AND SELECT LEVER

(a) Remove the bolt, then remove the shift and select lever.

(b) Remove the lock ball pin and spring from the shift and select lever.

MT

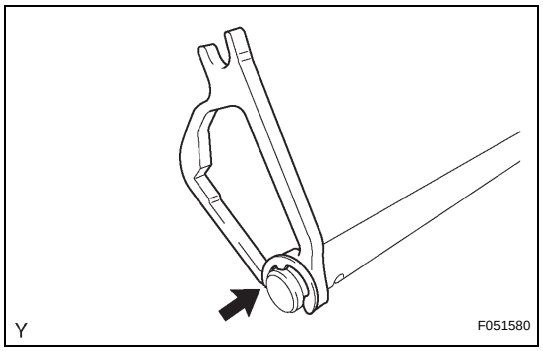

19. REMOVE SHIFT AND SELECT LEVER CAM

(a) Using a screwdriver, remove the E ring and the shift and select lever cam from the shift and select lever shaft.

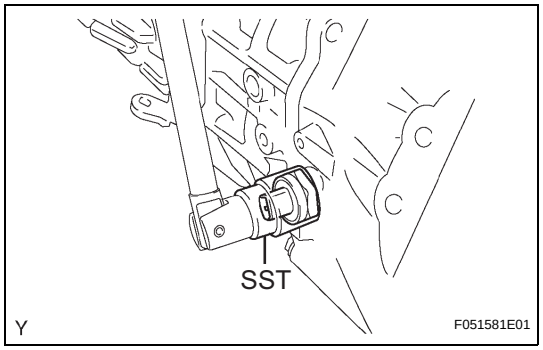

20. REMOVE BACK-UP LIGHT SWITCH ASSEMBLY

(a) Using SST, remove the back-up light switch and gasket.
SST 09817-16011

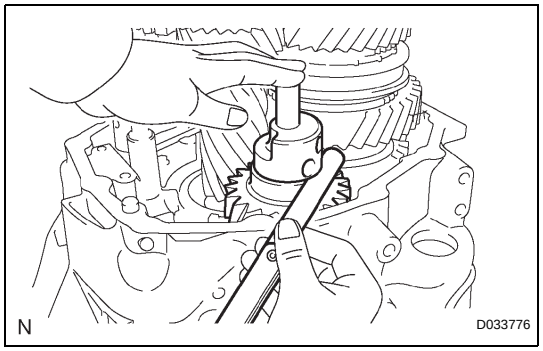

21. INSPECT REVERSE IDLER GEAR THRUST CLEARANCE

(a) Using a feeler gauge, measure the thrust clearance.
Standard clearance:
0.10 to 0.25 mm (0.0039 to 0.0098 in.)
Maximum clearance:
0.25 mm to (0.0098 in.)
If the clearance exceeds the maximum, replace the reverse idler gear shaft, reverse idler gear or transmission front case.

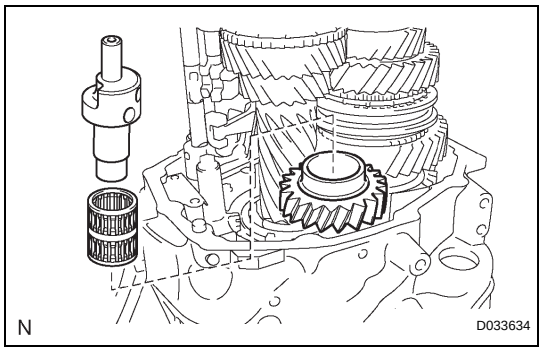

22. REMOVE REVERSE IDLER GEAR

(a) Remove the reverse idler gear shaft, needle roller bearing and reverse idler gear.

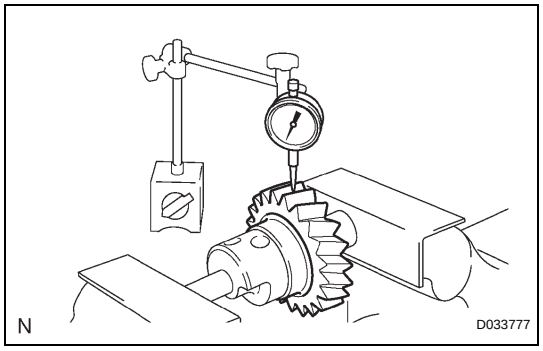

23. INSPECT REVERSE IDLER GEAR RADIAL CLEARANCE

(a) Using a dial indicator, measure the radial clearance.
Standard clearance:
0.015 to 0.050 mm (0.0006 to 0.0020 in.)
Maximum clearance:
0.050 mm (0.0020 in.)
If the clearance exceeds the maximum, replace the needle roller bearing.

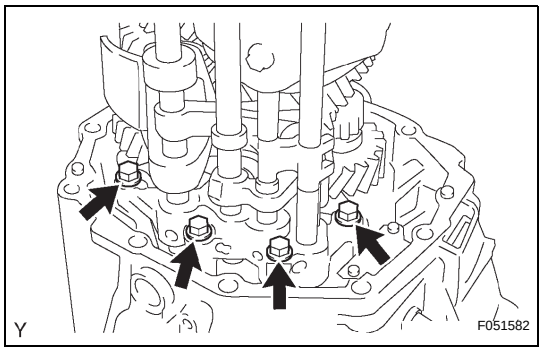

24. REMOVE TRANSMISSION FRONT CASE

(a) Remove the 4 bolts from the interlock bracket.

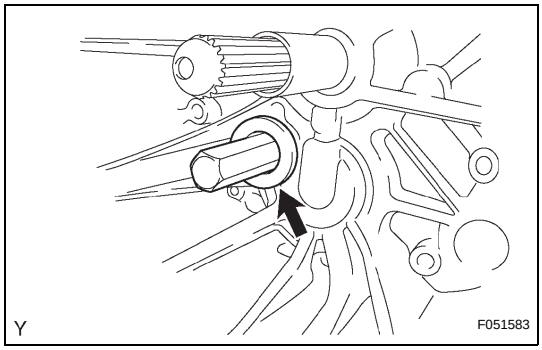

(b) Using a hexagon wrench (24 mm), remove the plug.

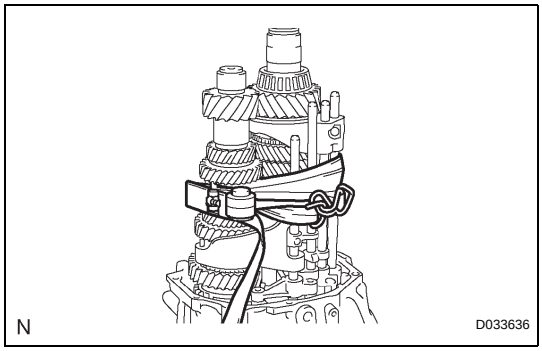

(c) Tie the input shaft, counter gear and control assembly with a piece of rope or string.

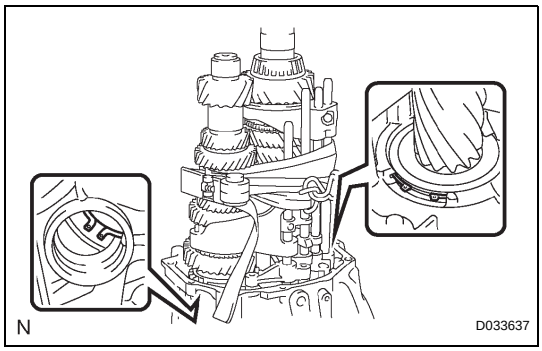

(d) Expand the 2 snap rings, and lift up the output shaft, input shaft, counter gear and control assembly.

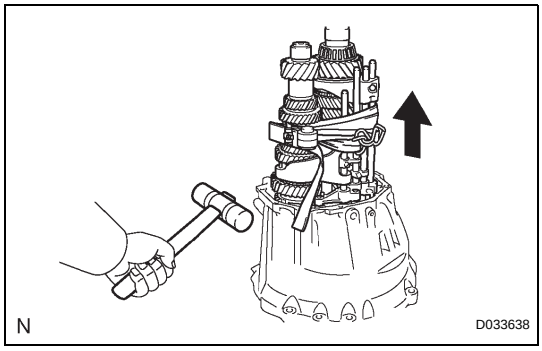

(e) Remove the output shaft, input shaft, counter gear shaft and control assembly while gently tapping the clutch housing with a plastic hammer.

NOTICE:

Take care not to subject the output shaft, input shaft, counter gear shaft and control assembly to any impact. This could cause the ball and spring to come out.

(f) Separate the output shaft, input shaft, counter gear shaft and control assembly.

MT

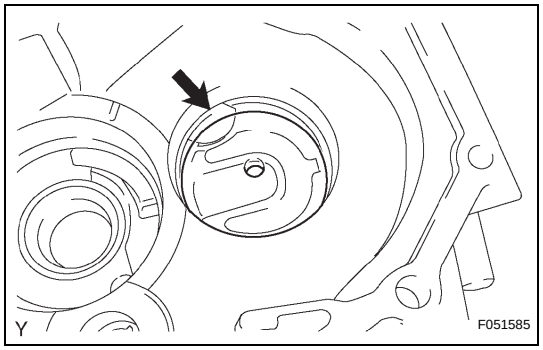

25. REMOVE NO. 1 OIL RECEIVER PIPE

(a) Remove the No. 1 oil receiver pipe from the transmission front case.

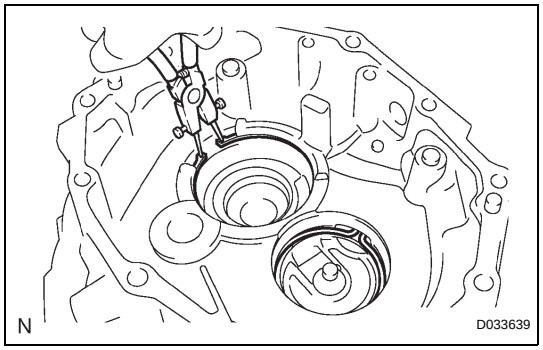

26. REMOVE FRONT BEARING SHAFT SNAP RING

(a) Using snap ring pliers, remove the 2 snap rings.

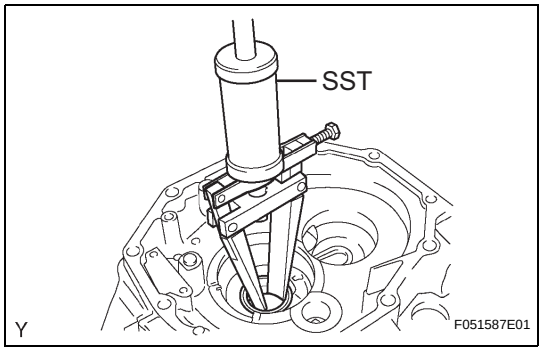

27. REMOVE TRANSMISSION CASE OIL SEAL

(a) Using SST, remove the transmission case oil seal from the transmission front case.
SST 09308-00010

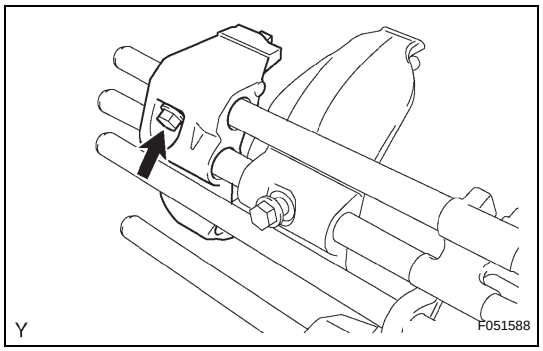

28. REMOVE NO. 3 GEAR SHIFT FORK

(a) Remove the bolt, then remove the No. 3 gear shift fork.

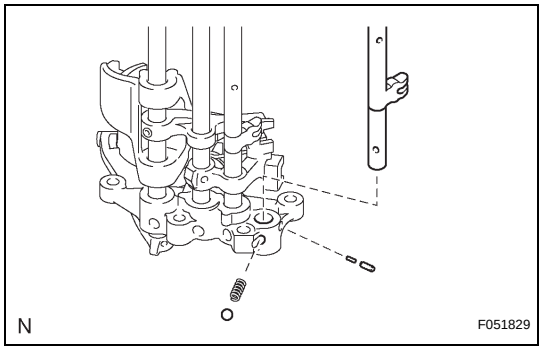

29. REMOVE NO. 3 GEAR SHIFT FORK SHAFT

(a) Remove the No. 3 shift fork shaft , boll, spring, No. 2 interlock pin and No. 3 interlock pin.

MT

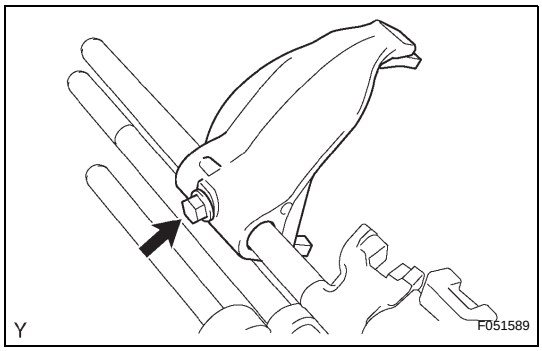

30. REMOVE NO. 2 GEAR SHIFT FORK

(a) Remove the bolt, then remove the No. 2 gear shift fork.

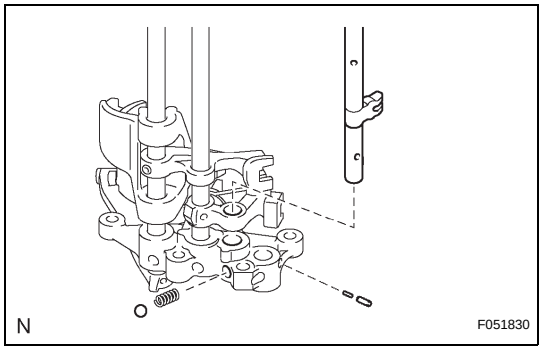

31. REMOVE NO. 2 GEAR SHIFT FORK SHAFT

(a) Remove the No. 2 shift fork shaft, ball, spring, No. 2 interlock pin and No. 3 interlock pin.

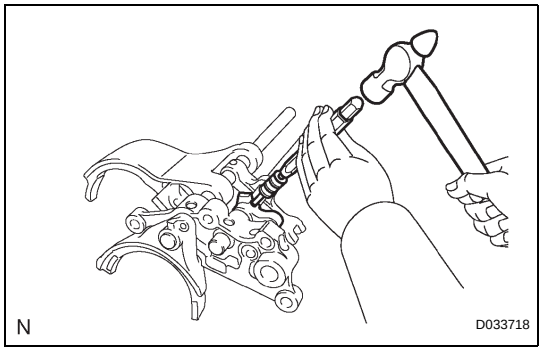

32. REMOVE NO. 1 GEAR SHIFT HEAD

(a) Using a pin punch (5 mm (0.20 in.)) and hammer, tap out the slotted pin.

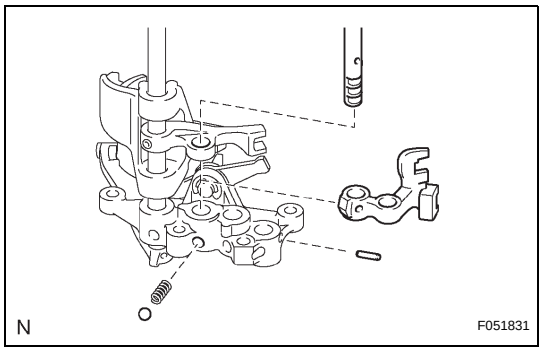

33. REMOVE NO. 1 GEAR SHIFT FORK SHAFT

(a) Remove the No. 1 shift fork shaft, ball, spring, No. 1 shift head and No. 1 interlock pin.

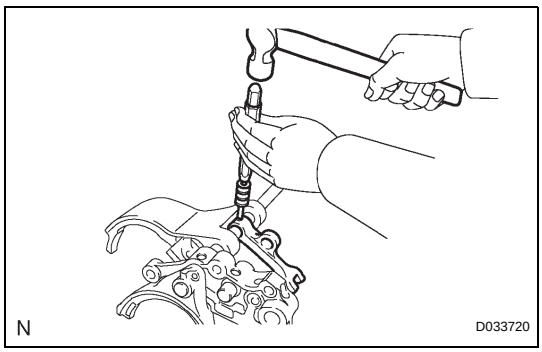

34. REMOVE NO. 1 GEAR SHIFT FORK

(a) Using a pin punch (5 mm (0.20 in.)) and hammer, tap out the slotted pin.

MT

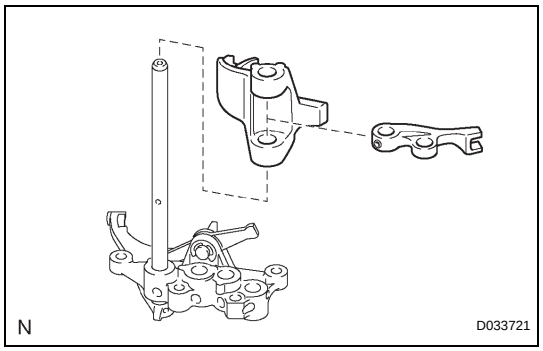

(b) Remove the No. 2 shift head and No. 1 shift fork.

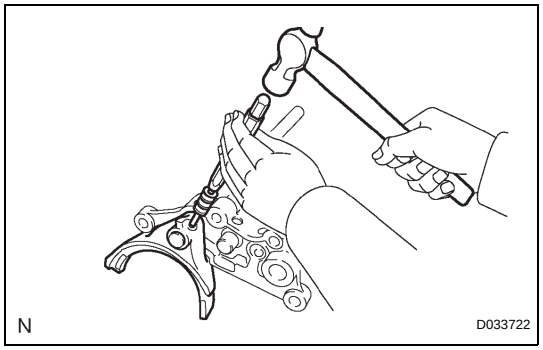

35. REMOVE NO. 4 GEAR SHIFT FORK

(a) Using a pin punch (5 mm (0.20 in.)) and hammer, tap out the slotted pin.

(b) Remove the No. 4 shift fork.

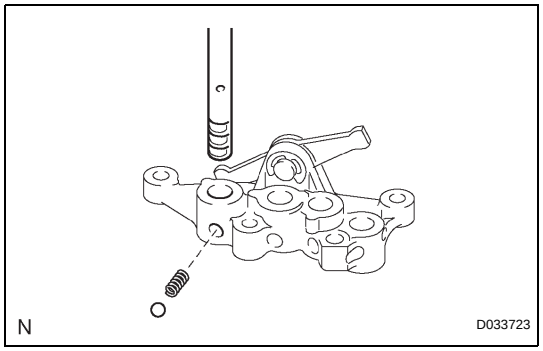

36. REMOVE NO. 4 GEAR SHIFT FORK SHAFT

(a) Remove the No. 4 shift fork shaft, ball and spring.

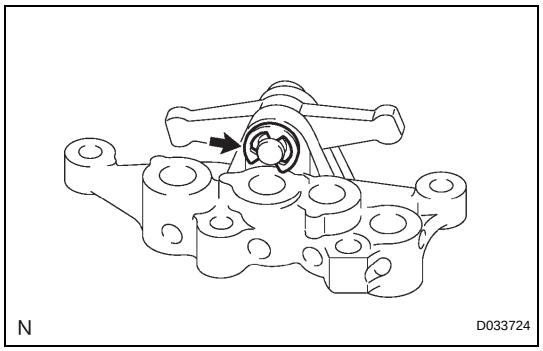

37. REMOVE 1ST AND REVERSE SHIFT ARM

(a) Using a screwdriver, remove the E-ring.

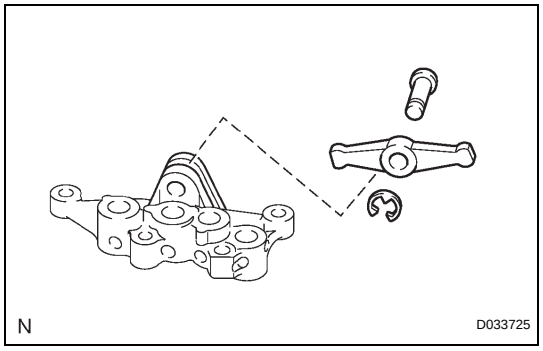

(b) Remove the shift arm pivot and shift arm.

MT

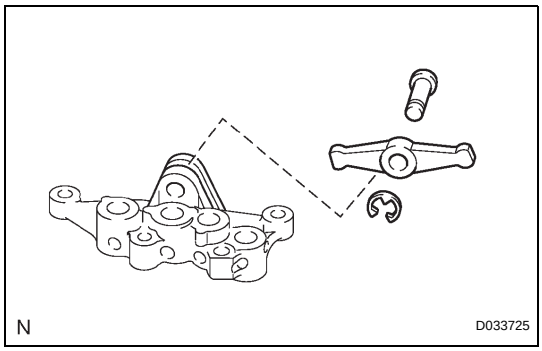

REASSEMBLY

1. INSTALL 1ST AND REVERSE SHIFT ARM

(a) Install the shift arm and shift arm pivot onto the interlock bracket.

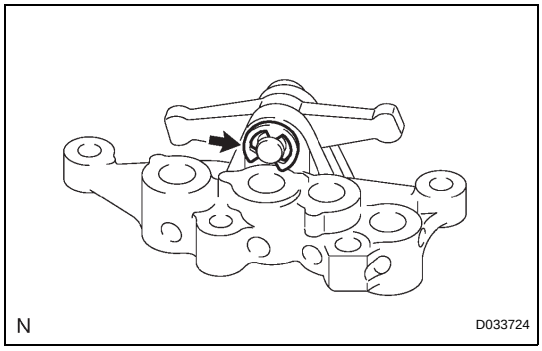

(b) Install a new E-ring onto the shift arm pivot.

2. INSTALL NO. 4 GEAR SHIFT FORK SHAFT

(a) Install the spring and ball onto the interlock bracket.

(b) Install the No. 4 shift fork shaft.

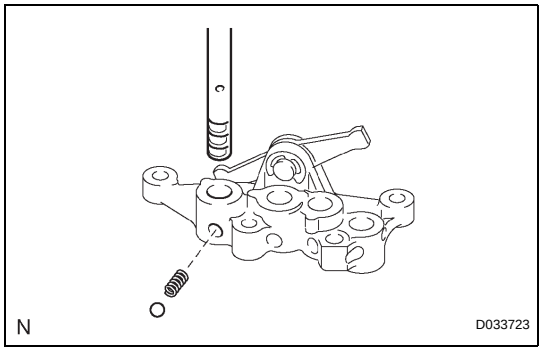

3. INSTALL NO. 4 GEAR SHIFT FORK

(a) Install the No. 4 shift fork onto the No. 4 shift fork shaft .

(b) Using a pin punch (5 mm (0.20 in.)) and hammer, tap a new slotted pin into the No. 4 shaft fork and No. 4 shift fork shaft.

Drive in depth:

0 to 0.5 mm (0 to 0.050 in.)

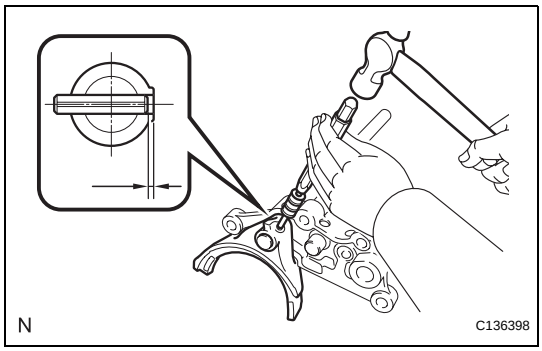

4. INSTALL NO. 1 GEAR SHIFT FORK

(a) Install the No. 1 shift fork and No. 2 shift head onto the No. 4 shift fork shaft.

(b) Using a pin punch (5 mm (0.20 in.)) and hammer, tap a new slotted pin into the No. 2 shaft head and No. 4 shift fork shaft.

Drive in depth:

0 to 0.5 mm (0 to 0.050 in.)

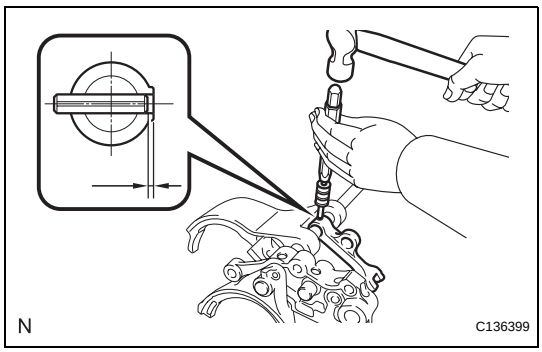

MT

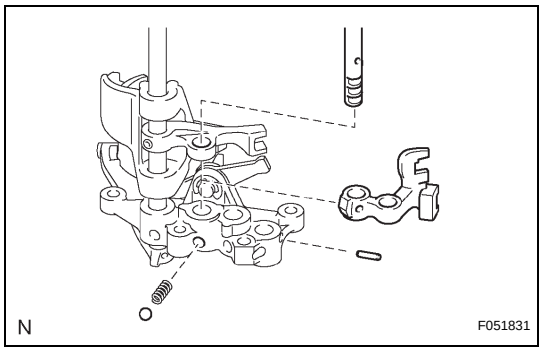

5. INSTALL NO. 1 GEAR SHIFT FORK SHAFT

(a) Apply MP grease to the No. 1 interlock pin and install it into the interlock bracket.
(b) Install the spring and ball into the interlock bracket.
(c) Install the No. 1 shift fork shaft onto the interlock bracket.
HINT:
Place the No. 4 shift fork shaft in the neutral position.

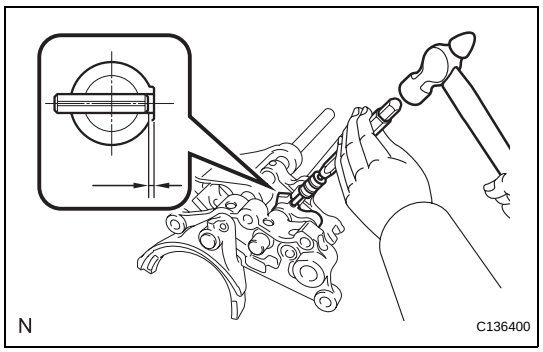

6. INSTALL NO. 1 GEAR SHIFT HEAD

(a) Install the No. 1 shift head into the No. 1 shift fork shaft.
(b) Using a pin punch (5 mm (0.20 in.)) and hammer, tap a new slotted pin into the No. 1 shaft head and No. 1 shift fork shaft.
Drive in depth:
0 to 0.5 mm (0 to 0.050 in.)

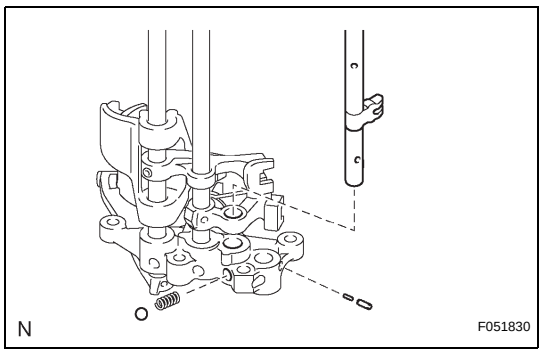

7. INSTALL NO. 2 GEAR SHIFT FORK SHAFT

(a) Apply MP grease to the No. 2 and No. 3 interlock pins, then install them onto the interlock bracket.
(b) Install the spring and ball into the interlock bracket.
(c) Install the No. 2 shift fork shaft onto the interlock bracket.
HINT:
Place the No. 3 and No. 4 shift fork shafts in the neutral position.

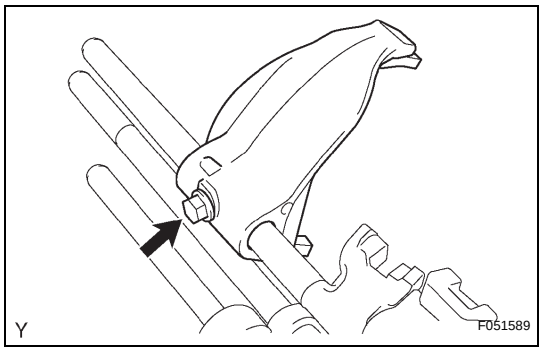

8. INSTALL NO. 2 GEAR SHIFT FORK

(a) Install the No. 2 shift fork with the bolt.
Torque: 20 N*m (199 kgf*cm, 14 ft.*lbf)

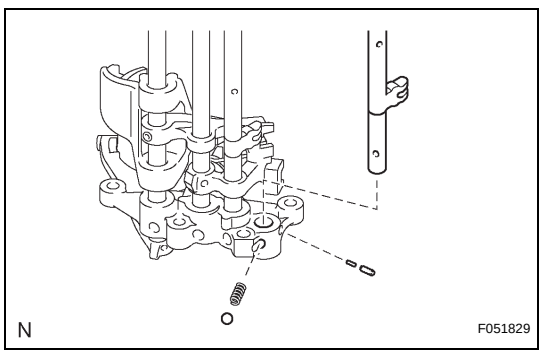

9. INSTALL NO. 3 GEAR SHIFT FORK SHAFT

(a) Apply MP grease to the No. 2 and No. 3 interlock pins, then install them onto the interlock bracket.
(b) Install the spring and ball into the interlock bracket.
(c) Install the No. 3 shift fork shaft onto the interlock bracket.
HINT:
Place the No. 2, No. 1 and No. 4 shift fork shafts in the neutral position.

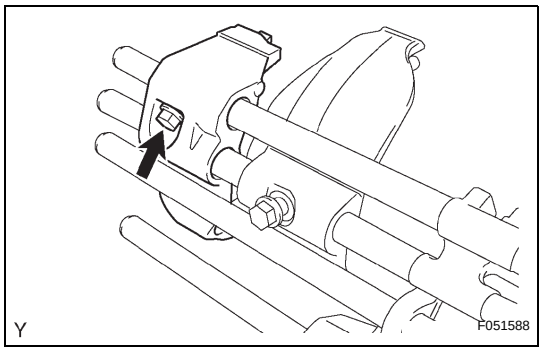

10. INSTALL NO. 3 GEAR SHIFT FORK

(a) Install the No. 3 shift fork with the bolt.
Torque: 20 N*m (199 kgf*cm, 14 ft.*lbf)

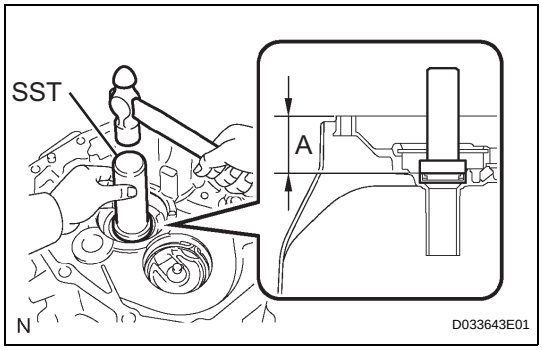

11. INSTALL TRANSMISSION CASE OIL SEAL

(a) Using SST and a hammer, tap a new oil seal into the front case in accordance with the dimension specified in the illustration.
SST 09950-70010 (09951-07100), 09950-60010 (09951-00470)
Dimension A:
60.0 to 60.8 mm (2.362 to 2.394 in.)

(b) Apply gear oil to the lip of the oil seal.

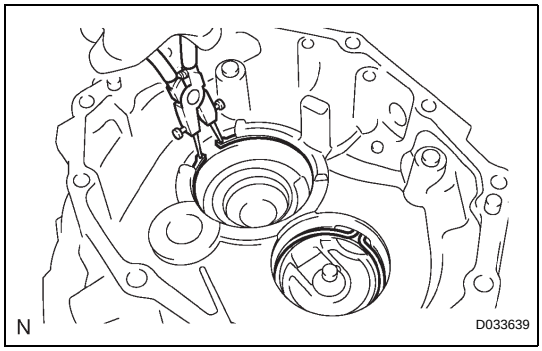

12. INSTALL FRONT BEARING SHAFT SNAP RING

(a) Using snap ring pliers, install the 2 snap rings.

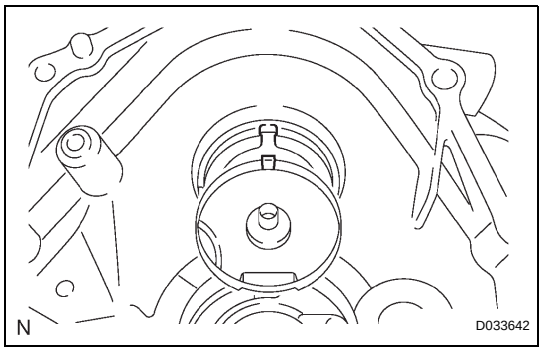

13. INSTALL NO. 1 OIL RECEIVER PIPE

(a) Install the No. 1 oil receiver pipe onto the transmission front case.
HINT:
Align the convex portion of the oil receiver pipe with the cutout of the front case and install the oil receiver pipe onto the clutch housing.

MT

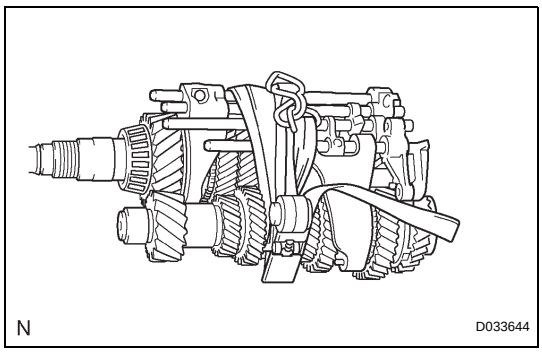

14. INSTALL TRANSMISSION FRONT CASE

(a) Apply gear oil to all sliding and rotating parts.
(b) Provisionally install the output shaft, input shaft, counter gear shaft and control assembly, and tie them with a piece of rope or string.

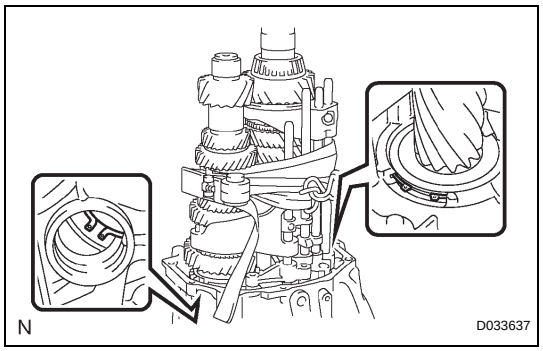

(c) Using a snap ring expander, extend the 2 snap rings and install the output shaft, input shaft, counter gear shaft and control assembly.
HINT:
Make sure that the snap ring is fitted into the grooves of the input shaft and front bearing of the counter gear shaft.

(d) Untie the output shaft, input shaft, counter gear shaft and control assembly.

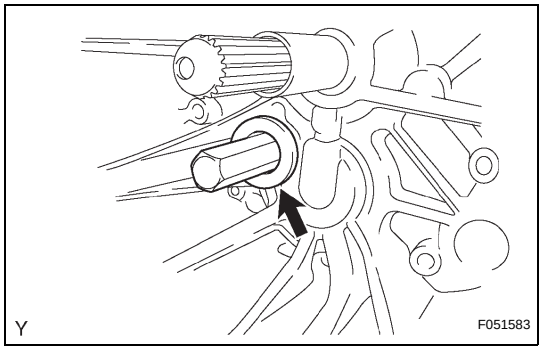

(e) Using a hexagonal wrench (24 mm), install the plug onto the front case.
Torque: 39 N*m (400 kgf*cm, 29 ft.*lbf)

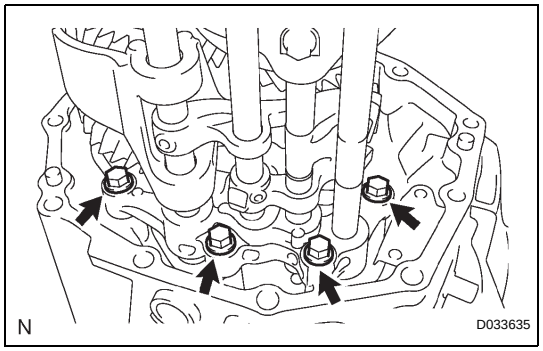

(f) Install the interlock bracket with the 4 bolts.
Torque: 21 N*m (214 kgf*cm, 15 ft.*lbf)

15. INSTALL REVERSE IDLER GEAR

(a) Install the reverse idler gear, reverse idler gear bearing and reverse idler gear shaft.
HINT:
Make sure that the reverse idler gear faces the correct direction as shown in the illustration.
NOTICE:
Make sure that the hole in the reverse idler shaft is in the position shown in the illustration.

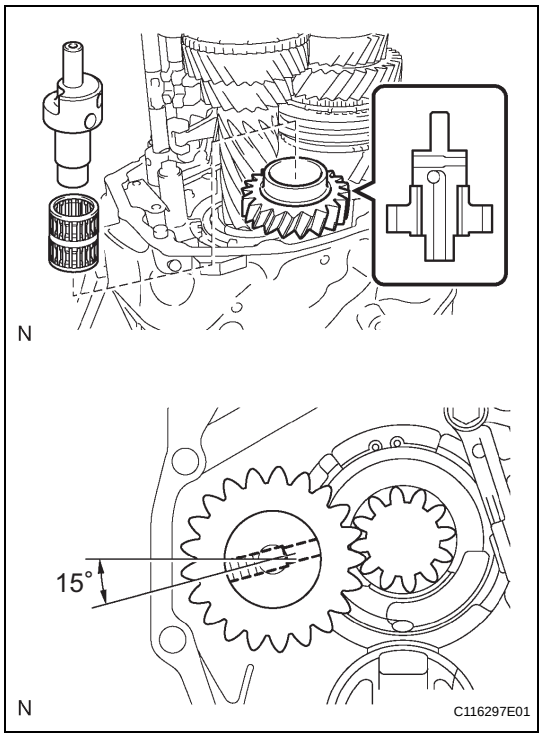

MT

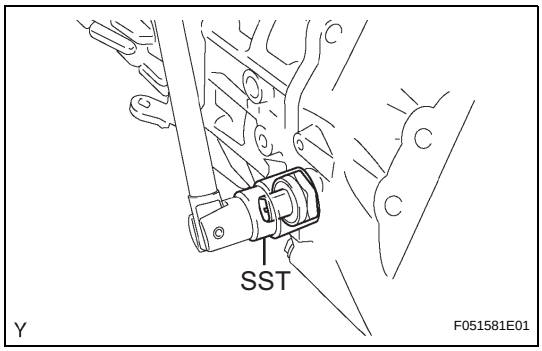

16. INSTALL BACK-UP LIGHT SWITCH ASSEMBLY

(a) Using SST, install the back-up light switch with a new gasket onto the transmission front case.
SST 09817-16011
Torque: 44 N*m (449 kgf*cm, 33 ft.*lbf)

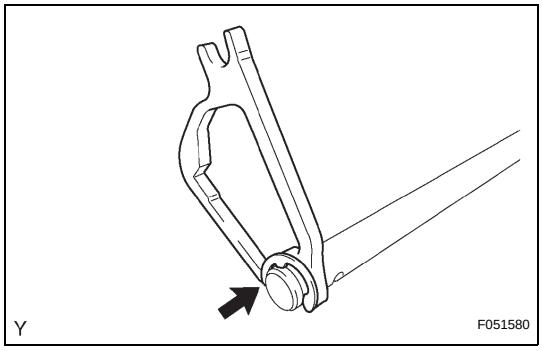

17. INSTALL SHIFT AND SELECT LEVER CAM

(a) Install the shift and select lever cam onto the shaft and install a new E-ring.

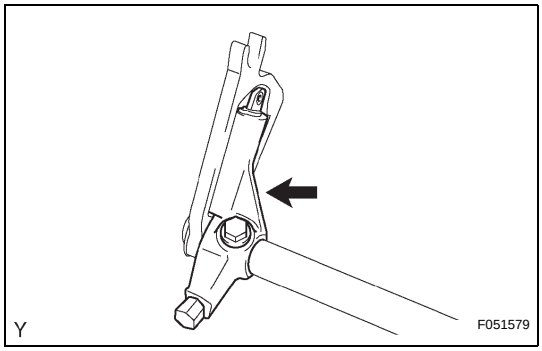

18. INSTALL SHIFT AND SELECT LEVER

(a) Install the lock ball pin and spring onto the shift and select lever.
(b) Install the shift and select lever onto the shift and select lever cam and shaft.
(c) Install the bolt onto the shift and select lever.
Torque: 33 N*m (340 kgf*cm, 25 ft.*lbf)

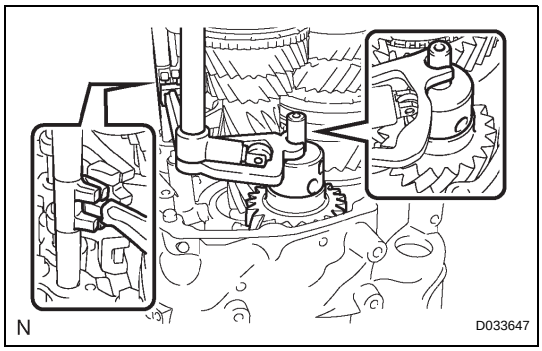

19. INSTALL SHIFT AND SELECT LEVER SHAFT

(a) Align the groove of the shift and select cam with the reverse idler shaft, and the claw with the groove of the control assembly, and install them.

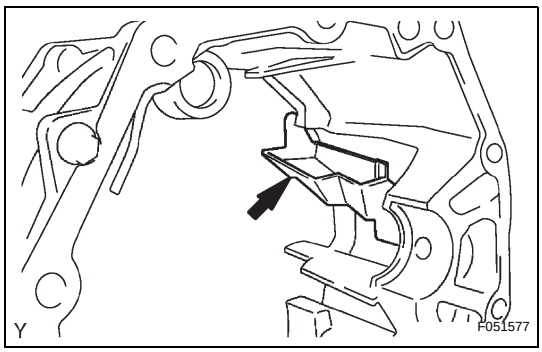

20. INSTALL NO. 2 OIL RECEIVER PIPE

(a) Install the No. 2 oil receiver pipe into the transmission middle case.

MT

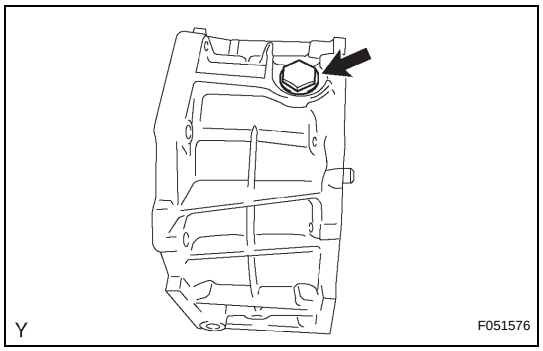

21. INSTALL DRAIN PLUG SUB-ASSEMBLY

(a) Install the drain plug with a new gasket onto the transmission middle case.
Torque: 37 N*m (377 kgf*cm, 27 ft.*lbf)

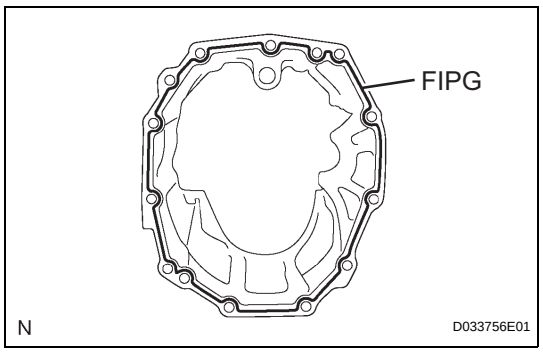

22. INSTALL TRANSMISSION MIDDLE CASE

(a) Apply FIPG to the transmission middle case, as shown in the illustration.
FIPG:
Toyota Genuine Seal Packing 1281, Three Bond 1281 or Equivalent
NOTICE:
Parts must be assembled within 10 minutes of the application. Otherwise, the packing (FIPG) material must be removed and reapplied.

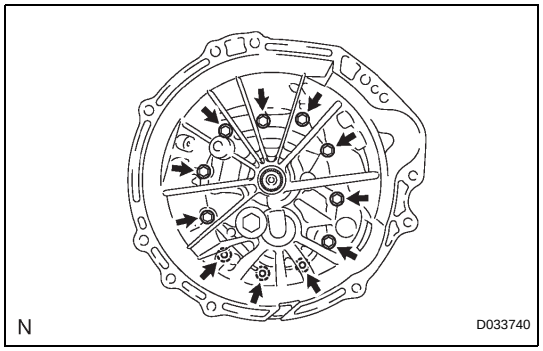

(b) Install the transmission middle case with the 11 bolts onto the transmission front case.
Torque: 40 N*m (408 kgf*cm, 30 ft.*lbf)
Bolt length:
Bolt A: 40 mm (1.57 in.)
Bolt B: 80 mm (3.15 in.)

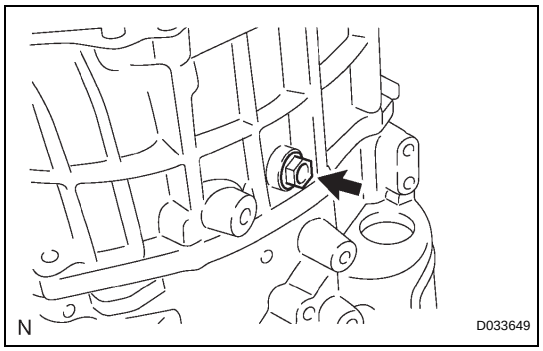

23. INSTALL REVERSE IDLER GEAR SHAFT BOLT

(a) Install a new gasket and the reverse idler gear shaft bolt onto the reverse idler gear shaft.
Torque: 28 N*m (286 kgf*cm, 21 ft.*lbf)

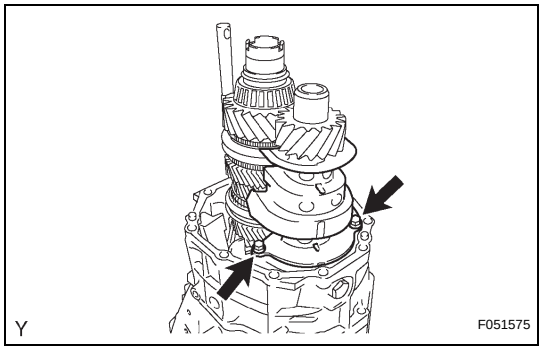

24. INSTALL TRANSMISSION OIL SEPARATOR

(a) Install the transmission oil separator with the 2 bolts.
Torque: 8.5 N*m (87 kgf*cm, 75 in.*lbf)

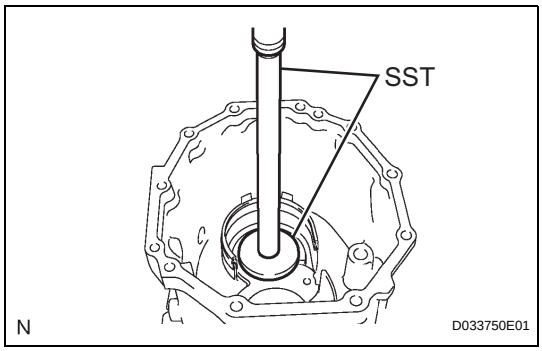

25. INSTALL COUNTER GEAR REAR RADIAL BALL BEARING

(a) Coat a new counter gear rear radial ball bearing with gear oil, and using SST and a press, install it into the transmission rear case.

SST 09950-70010 (09951-07360), 09950-60010 (09951-00650)

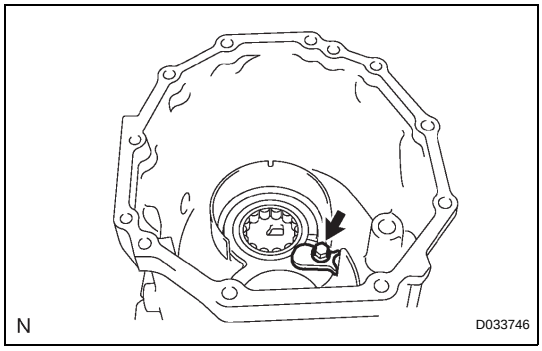

(b) Install the bearing lock plate with the bolt.

Torque: 11 N*m (115 kgf*cm, 8.3 ft.*lbf)

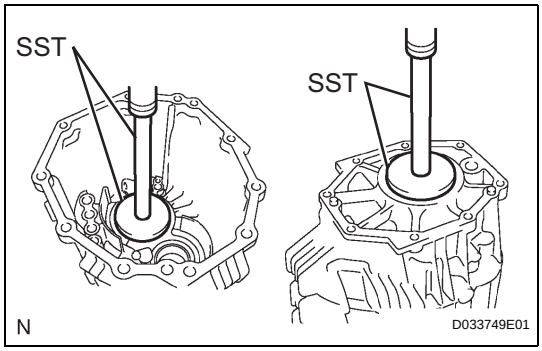

26. INSTALL OUTPUT SHAFT REAR BEARING OUTER RACE

(a) Using SST and a press, press in 2 new bearing outer races.

SST 09950-70010 (09951-07100, 09951-07360), 09950-60020 (09951-00790)

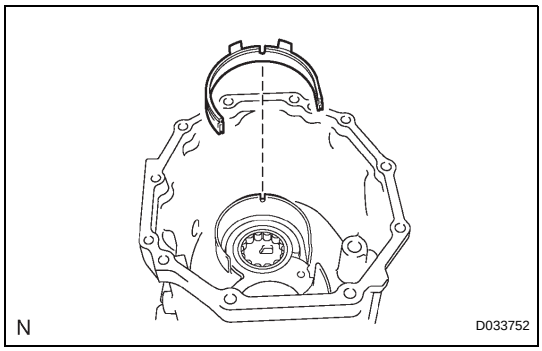

27. INSTALL OIL SEPARATOR PACKING SEAL

(a) Install the oil separator packing seal onto the transmission rear case.

HINT:

Insert the protruding part of the oil separator packing seal into the groove on the transmission rear case.

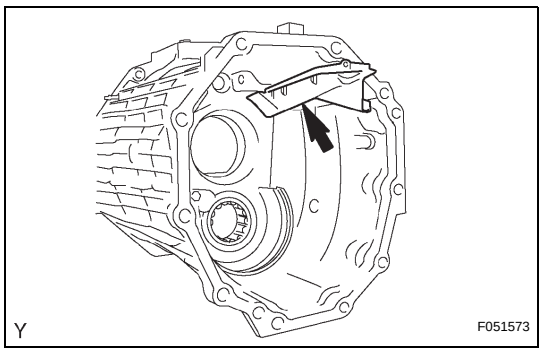

28. INSTALL EXTENSION HOUSING OIL RECEIVER PIPE

(a) Install the extension housing oil receiver pipe onto the transmission rear case.

MT

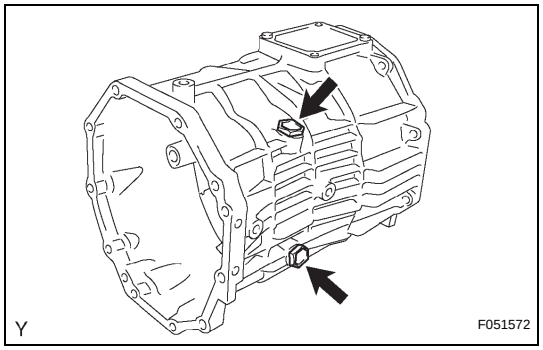

29. INSTALL MANUAL TRANSMISSION FILLER PLUG

(a) Install the 2 transmission filler plugs with 2 new gaskets onto the transmission rear case.
Torque: 37 N*m (377 kgf*cm, 27 ft.*lbf)

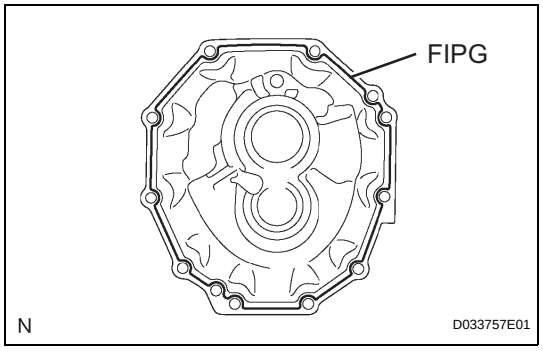

30. INSTALL TRANSMISSION REAR CASE

(a) Apply FIPG to the transmission rear case, as shown in the illustration.
FIPG:
Toyota Genuine Seal Packing 1281, Three Bond 1281 or Equivalent
NOTICE:
Parts must be assembled within 10 minutes of the application. Otherwise, the packing (FIPG) material must be removed and reapplied.

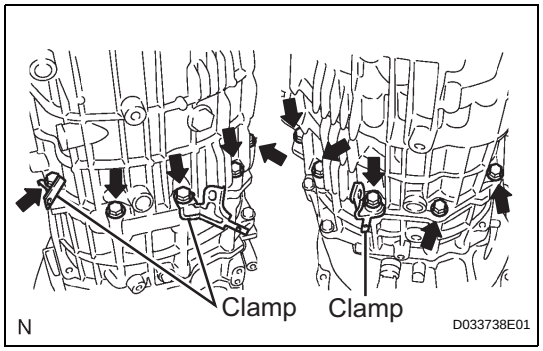

(b) Install the transmission rear case with the 10 bolts and 3 brackets onto the transmission middle case.
Torque: 40 N*m (408 kgf*cm, 30 ft.*lbf)

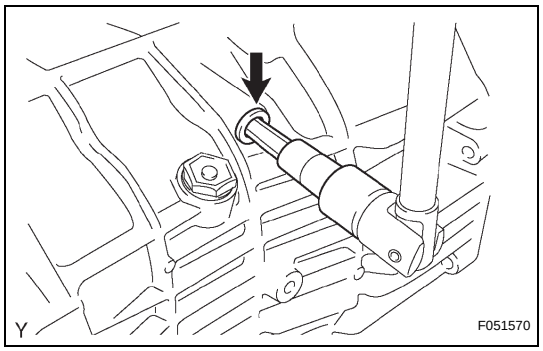

31. INSTALL SHIFT DETENT BALL PLUG

(a) Install the ball and compression spring onto the transmission rear case.
(b) Install a new shift detent ball plug, and install it onto the transmission rear case.
Torque: 25 N*m (250 kgf*cm, 18 ft.*lbf)

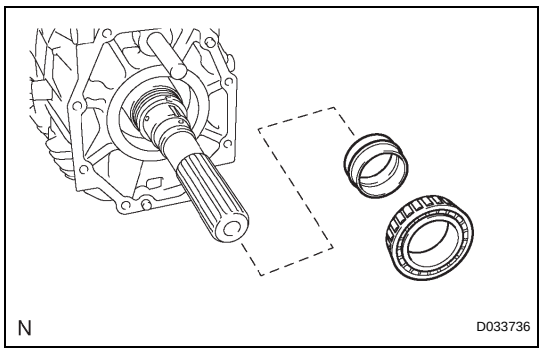

32. INSTALL OUTPUT SHAFT ADJUST NUT

(a) Using a belt and wooden block, fasten the transmission to the workbench.
(b) Install a new spacer and output shaft taper roller bearing No. 2.

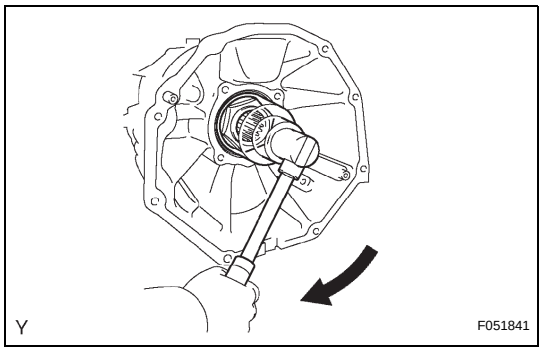

(c) Using a socket wrench (60 mm), provisionally tighten a new nut until there is no slack in the output shaft.
HINT:
No preload should be applied to the nut.
(d) Fit the bearing into the output shaft by turning the output shaft 15 times.

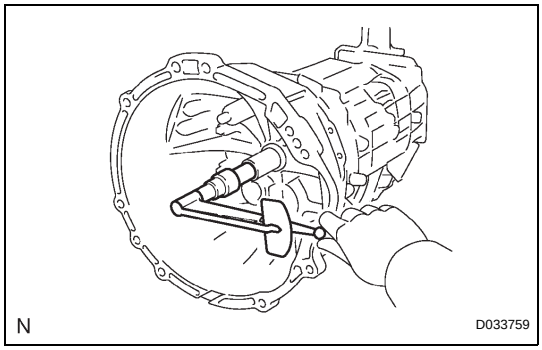

(e) Place the gearshift into 5th gear and check the initial torque of the input shaft.
(f) Using a socket wrench (60 mm), tighten the nut.
(g) Place the gearshift into 5th gear and check the initial torque of the input shaft.
(h) Confirm that the difference between (e) and (g) is within the specified values.
Preload (at starting):
0.45 to 1.35 N*m (4.59 to 13.77 kgf*cm, 3.98 to 11.95 in.*lbf)
If the result is not as specified, tighten and adjust the output shaft adjusting nut.
NOTICE:
If the output shaft adjusting nut is loose or removed due to a large preload, always replace the spacer with a new one.

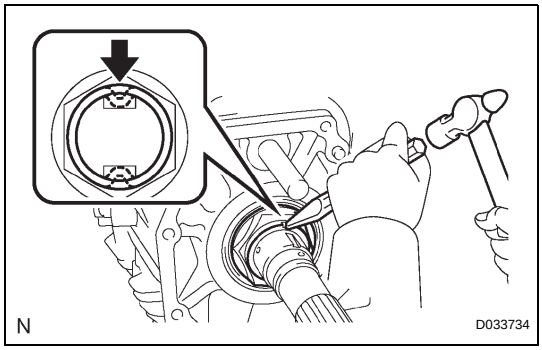

(i) Using a chisel and hammer, caulk the output shaft adjust nut.

MT

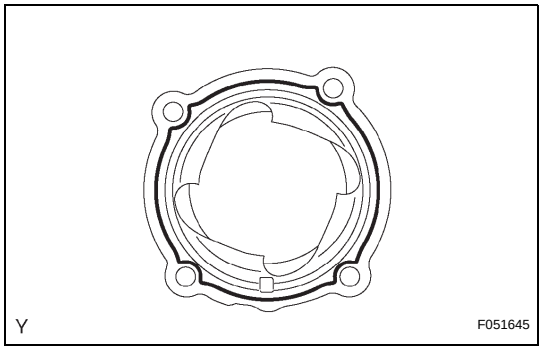

33. INSTALL MANUAL TRANSMISSION CASE COVER SUB-ASSEMBLY

(a) Apply FIPG to the transmission case cover, as shown in the illustration.
FIPG:
Toyota Genuine Seal Packing 1281, Three Bond 1281 or Equivalent
NOTICE:
Parts must be assembled within 10 minutes of the application. Otherwise, the packing (FIPG) material must be removed and reapplied.

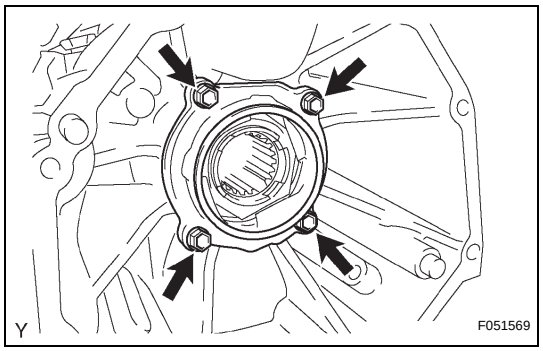

(b) Install the transmission case cover with the 4 bolts.
Torque: 18 N*m (184 kgf*cm, 13 ft.*lbf)

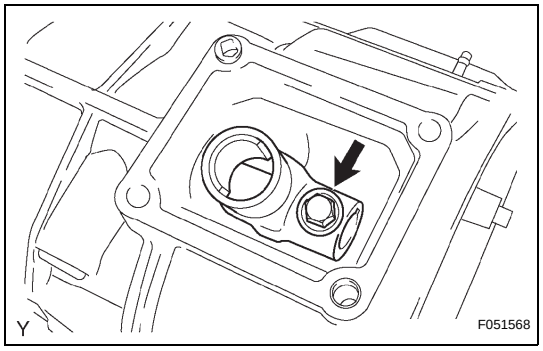

34. INSTALL SHIFT LEVER HOUSING

(a) Install the shift lever housing with the bolt.
Torque: 33 N*m (340 kgf*cm, 25 ft.*lbf)

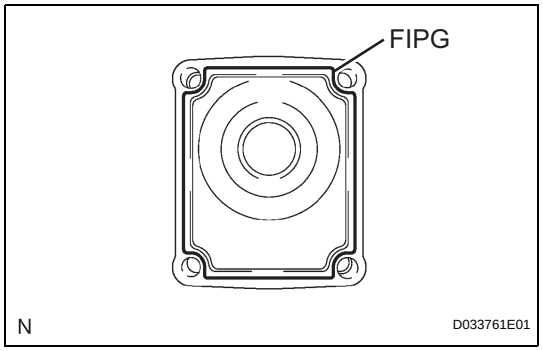

35. INSTALL FLOOR SHIFT CONTROL SHIFT LEVER RETAINER SUB-ASSEMBLY

(a) Apply FIPG to the floor shift control shift lever retainer, as shown in the illustration.
FIPG:
Toyota Genuine Seal Packing 1281, Three Bond 1281 or Equivalent
NOTICE:
Parts must be assembled within 10 minutes of the application. Otherwise, the packing (FIPG) material must be removed and reapplied.

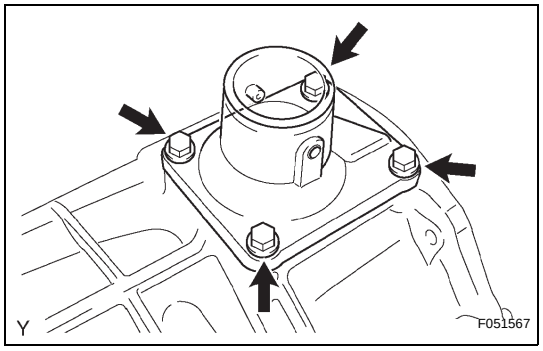

(b) Install the floor shift control shift lever retainer with the 4 bolts.
Torque: 20 N*m (204 kgf*cm, 15 ft.*lbf)

MT

INPUT SHAFT

COMPONENTS

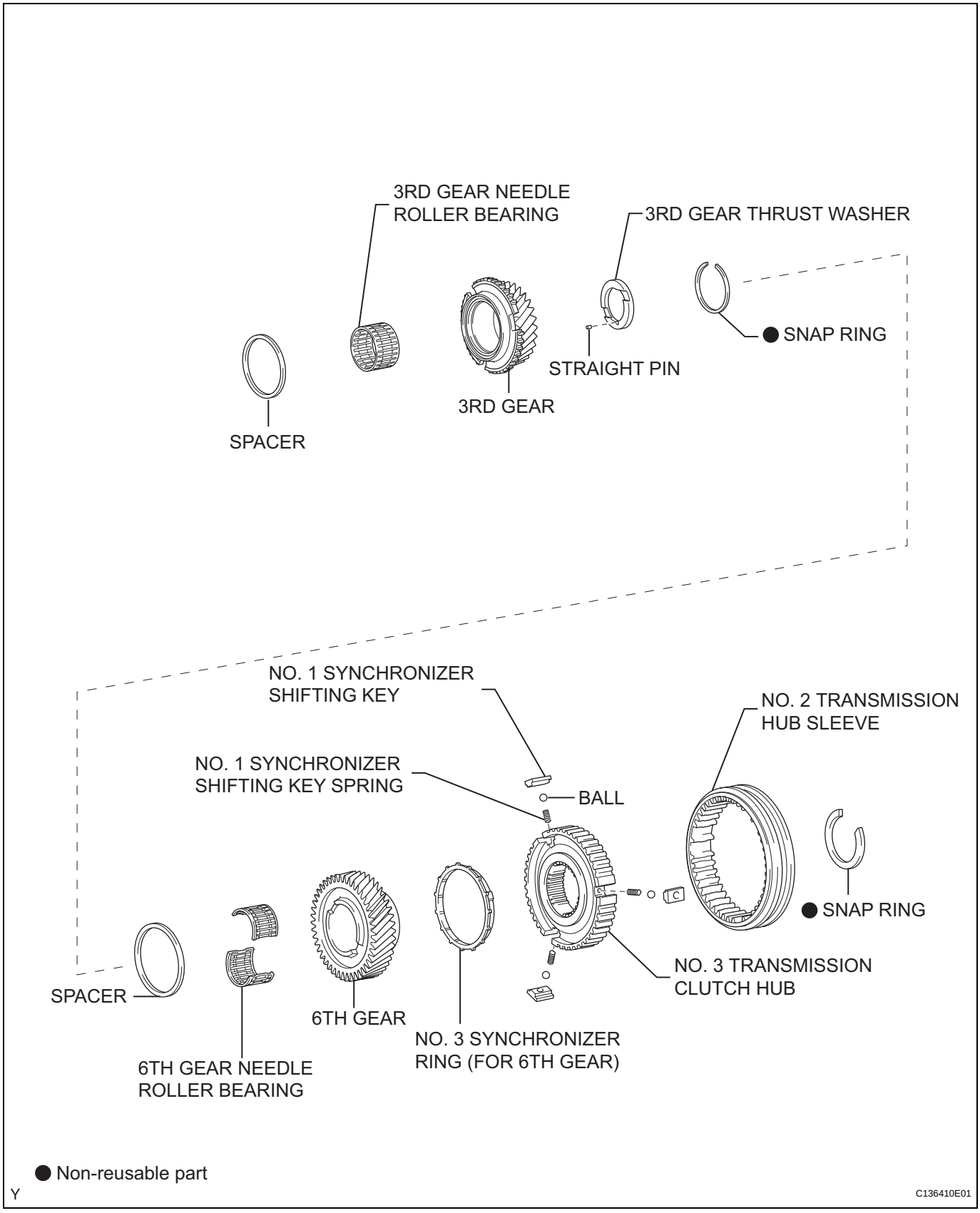

MT

Y

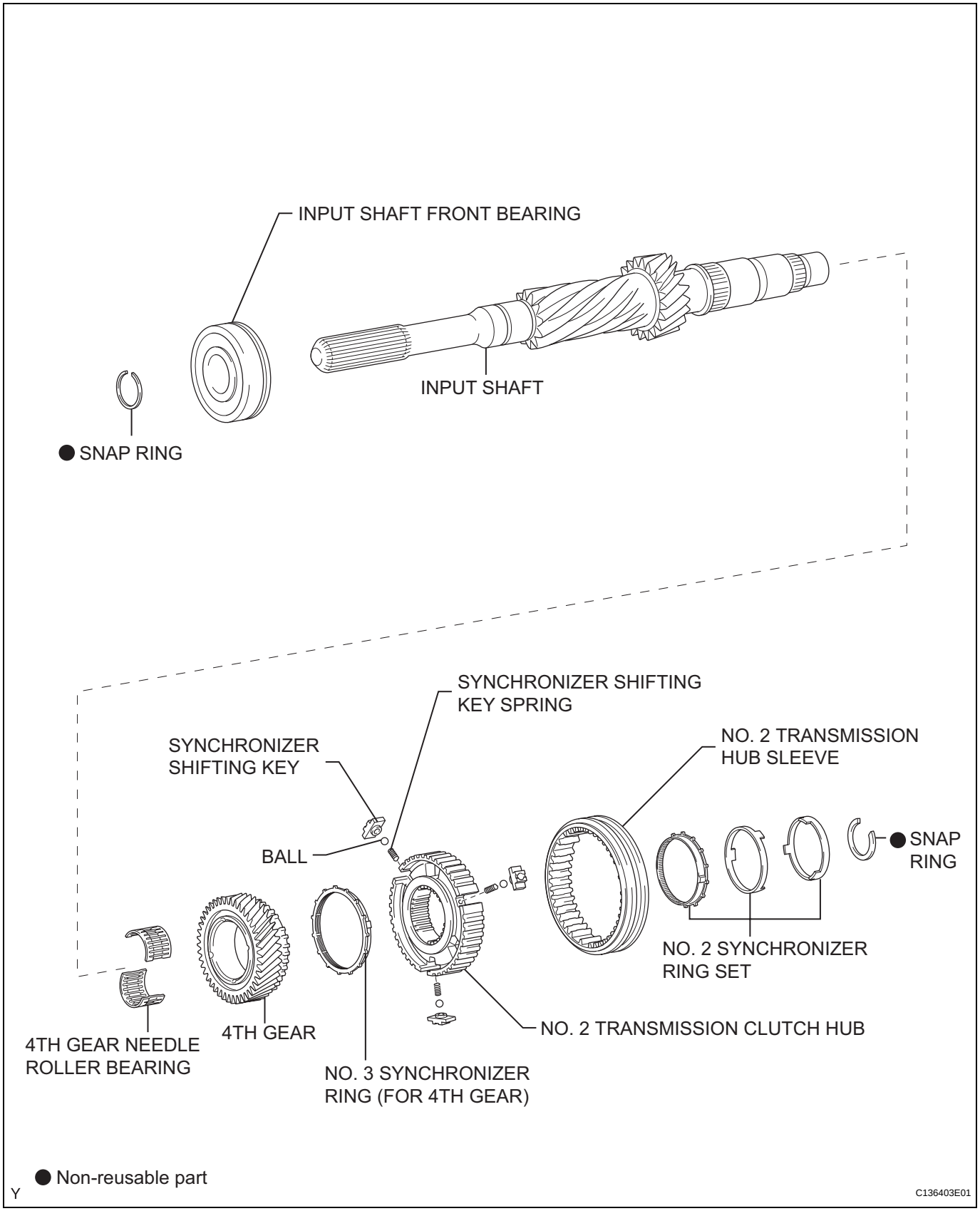
INPUT SHAFT FRONT BEARING
INPUT SHAFT
● SNAP RING
SYNCHRONIZER SHIFTING KEY SPRING
SYNCHRONIZER SHIFTING KEY
NO. 2 TRANSMISSION HUB SLEEVE
BALL
● SNAP RING
NO. 2 SYNCHRONIZER RING SET
4TH GEAR NEEDLE ROLLER BEARING
4TH GEAR
NO. 3 SYNCHRONIZER RING (FOR 4TH GEAR)
NO. 2 TRANSMISSION CLUTCH HUB
● Non-reusable part
Y
C136403E01

MT

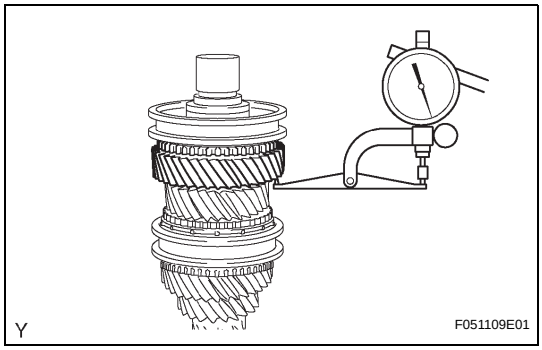

DISASSEMBLY

1. INSPECT 6TH GEAR THRUST CLEARANCE

(a) Using a dial indicator, measure the 6th gear thrust clearance.

Standard clearance:

0.20 to 0.49 mm (0.0079 to 0.0193 in.)

If the clearance is outside the specification, replace the defective gear, spacer or shaft.

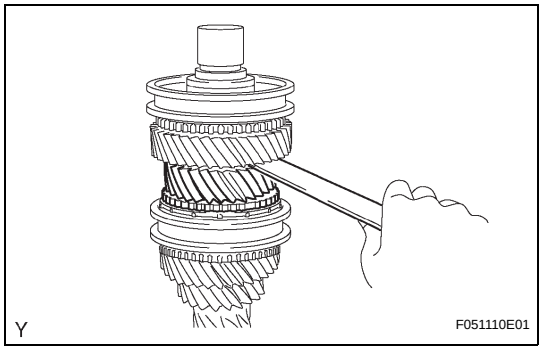

2. INSPECT 3RD GEAR THRUST CLEARANCE

(a) Using a feeler gauge, measure the 3rd gear thrust clearance.

Standard clearance:

0.09 to 0.52 mm (0.0035 to 0.0205 in.)

If the clearance is outside the specification, replace the defective gear, thrust washer, clutch hub or shaft.

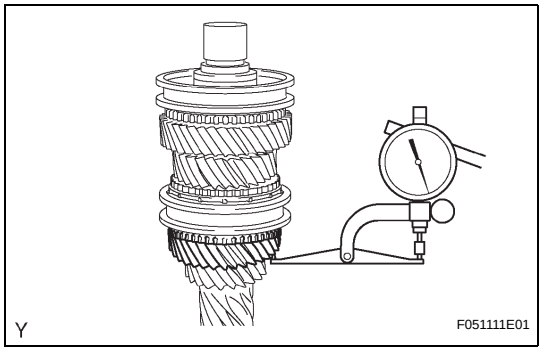

3. INSPECT 4TH GEAR THRUST CLEARANCE

(a) Using a dial indicator, measure the 4th gear thrust clearance.

Standard clearance:

0.12 to 0.38 mm (0.0047 to 0.0150 in.)

If the clearance is outside the specification, replace the defective gear, clutch hub or shaft.

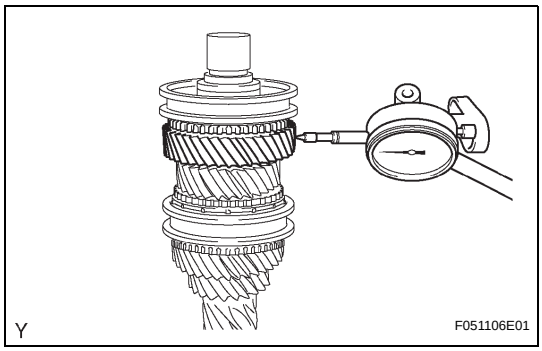

4. INSPECT 6TH GEAR RADIAL CLEARANCE

(a) Using a dial indicator, measure the 6th gear radial clearance.

Standard clearance:

0.015 to 0.065 mm (0.0006 to 0.0026 in.)

If the clearance is outside the specification, replace the defective gear, needle roller bearing or shaft.

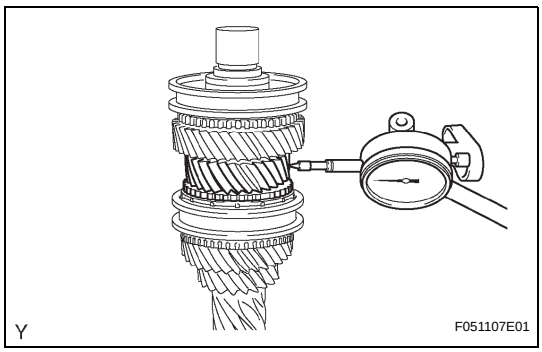

5. INSPECT 3RD GEAR RADIAL CLEARANCE

(a) Using a dial indicator, measure the 3rd gear radial clearance.

Standard clearance:

0.015 to 0.067 mm (0.0006 to 0.0026 in.)

If the clearance is outside the specification, replace the defective gear, needle roller bearing or shaft.

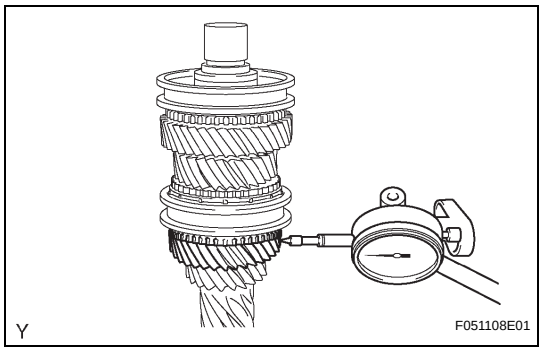

6. INSPECT 4TH GEAR RADIAL CLEARANCE

(a) Using a dial indicator, measure the 4th gear radial clearance.

Standard clearance:

0.015 to 0.067 mm (0.0006 to 0.0026 in.)

If the clearance is outside the specification, replace the defective gear, needle roller bearing or shaft.

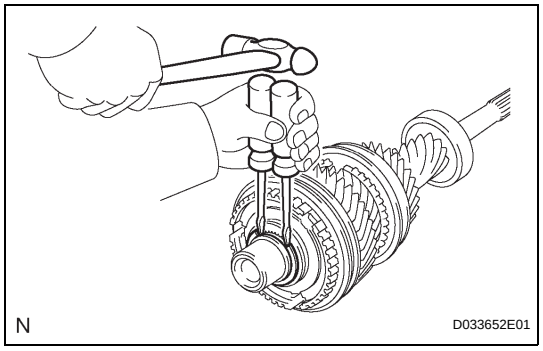

7. REMOVE TRANSMISSION CLUTCH HUB NO.3 SHAFT SNAP RING

(a) Using 2 screwdrivers and a hammer, tap out the snap ring.

HINT:

Use a shop rag or a piece of cloth to prevent the snap ring from flying off.

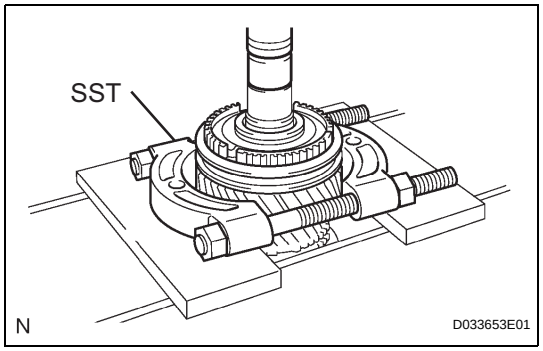

8. REMOVE 6TH GEAR

(a) Using SST and a press, remove transmission clutch hub No. 3, the hub sleeve, synchronizer ring and 6th gear from the input shaft.

SST 09950-00020, 09950-70010 (09951-07200), 09950-60010 (09951-00300)

NOTICE:

- **Do not tighten SST excessively.**
- **Support the input shaft by hand so that it does not fall off.**

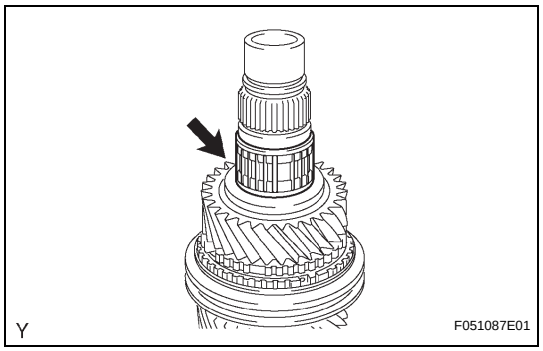

9. REMOVE 6TH GEAR NEEDLE ROLLER BEARING

(a) Remove the 6th gear needle roller bearing from the input shaft.

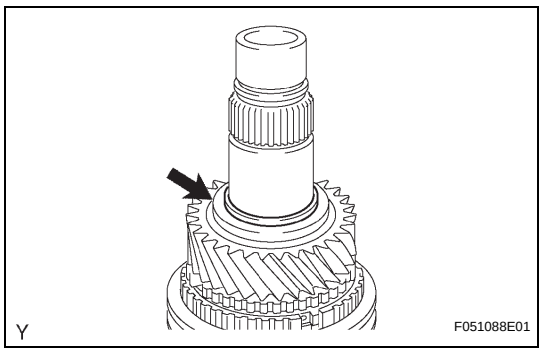

10. REMOVE SPACER

(a) Remove the spacer from the input shaft.

MT

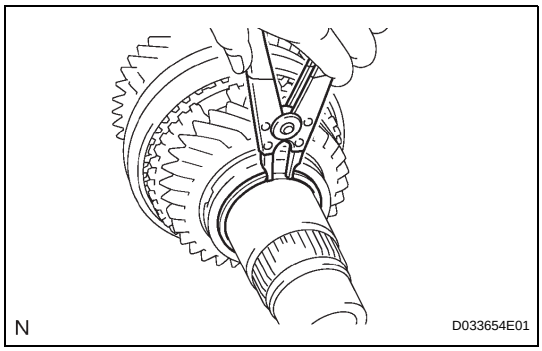

11. REMOVE GEAR THRUST WASHER SHAFT SNAP RING

(a) Using a snap ring expander, remove the snap ring from the input shaft.

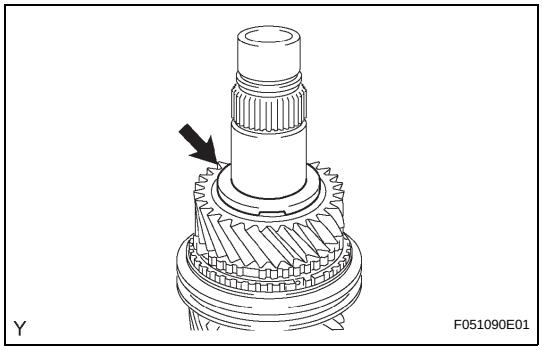

12. REMOVE 3RD GEAR THRUST WASHER

(a) Remove the 3rd gear thrust washer from the input shaft.

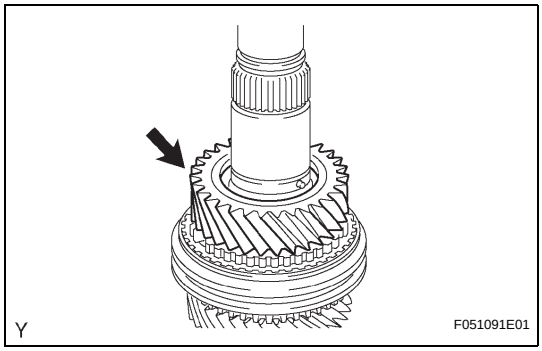

13. REMOVE 3RD GEAR

(a) Remove the 3rd gear from the input shaft.

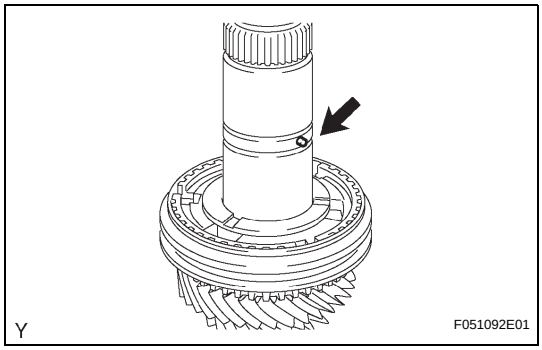

14. REMOVE STRAIGHT PIN

(a) Remove the straight pin from the input shaft.

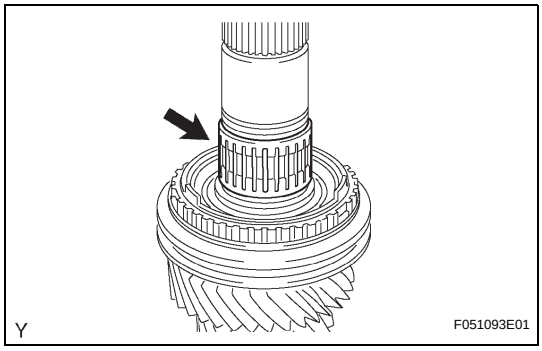

15. REMOVE 3RD GEAR NEEDLE ROLLER BEARING

(a) Remove the 3rd gear needle roller bearing from the input shaft.

MT

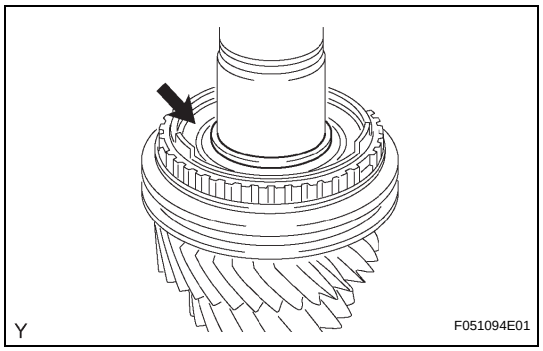

16. REMOVE SPACER

(a) Remove the spacer from the input shaft.

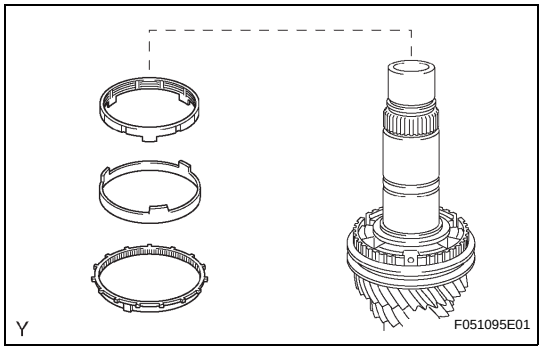

17. REMOVE NO. 2 SYNCHRONIZER RING SET

(a) Remove the No. 2 synchronizer ring set from the input shaft.

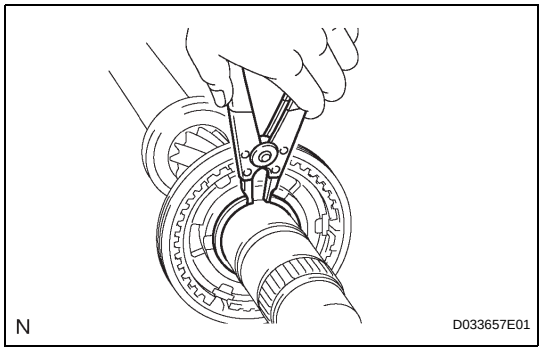

18. REMOVE CLUTCH HUB NO.2 SETTING SHAFT SNAP RING

(a) Using a snap ring expander, remove the snap ring from the input shaft.

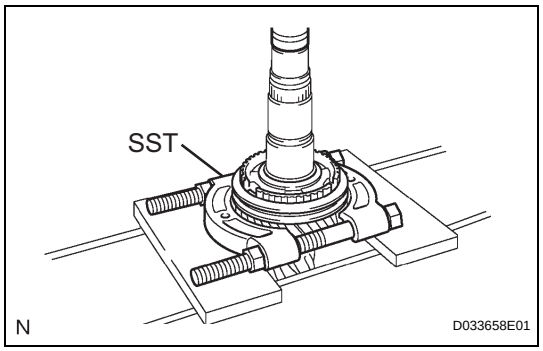

19. REMOVE 4TH GEAR

(a) Using SST and a press, remove transmission clutch hub No. 2, the hub sleeve, synchronizer ring and 4th gear from the input shaft.
SST 09950-00020
NOTICE:
Support the input shaft by hand so that it does not fall off.

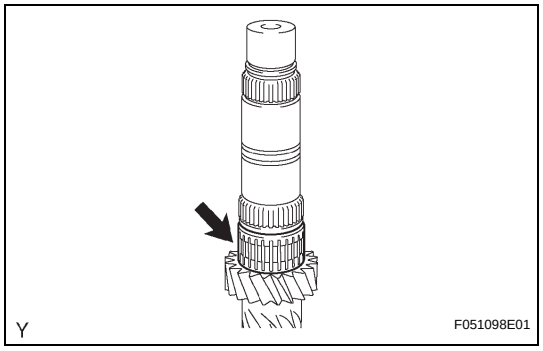

20. REMOVE 4TH GEAR NEEDLE ROLLER BEARING

(a) Remove the 4th gear needle roller bearing from the input shaft.

MT

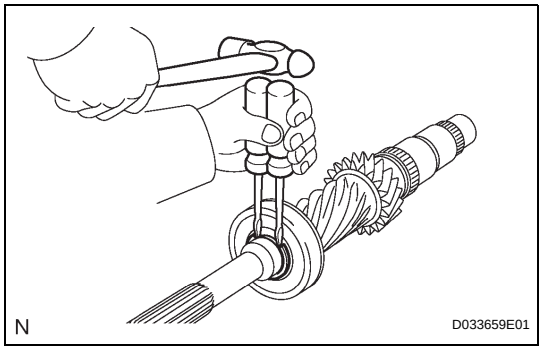

21. REMOVE INPUT SHAFT FRONT BEARING SNAP RING

(a) Using 2 screwdrivers and a hammer, tap out the snap ring.
HINT:
Use a shop rag or piece of cloth to prevent the snap ring from flying off.

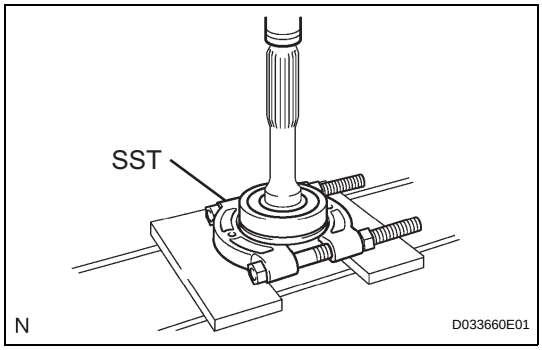

22. REMOVE INPUT SHAFT FRONT BEARING

(a) Using SST and a press, remove the input shaft front bearing from the input shaft.
SST 09950-00020
NOTICE:
Support the input shaft by hand so that it does not fall off.

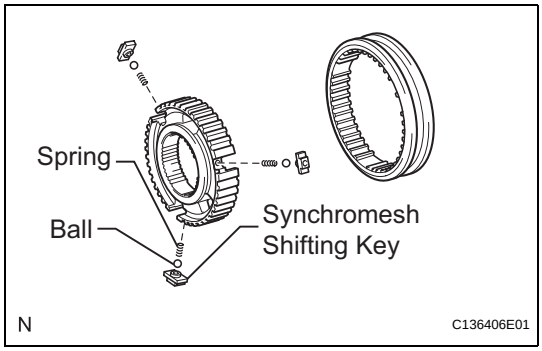

23. REMOVE NO. 2 TRANSMISSION CLUTCH HUB

(a) Remove the clutch hub, 3 synchromesh shifting keys, 3 balls and 3 springs from the hub sleeve.
HINT:
Use a shop rag or piece of cloth to prevent the ball and spring from flying off.

24. REMOVE NO. 3 TRANSMISSION CLUTCH HUB

(a) Perform the same procedures as for the No. 2 clutch hub.

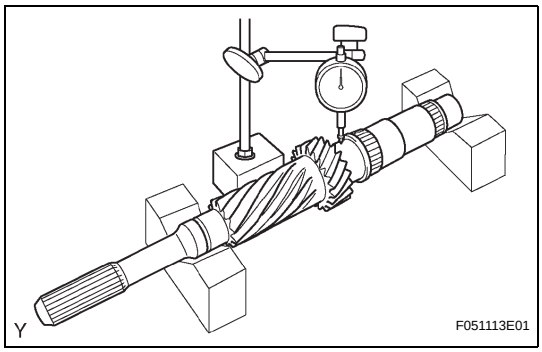

INSPECTION

1. INSPECT INPUT SHAFT

(a) Using a dial indicator and 2 V-blocks, measure the shaft runout.
Maximum runout:
0.03 mm (0.0012 in.)
If the runout exceeds the maximum, replace the input shaft.

MT

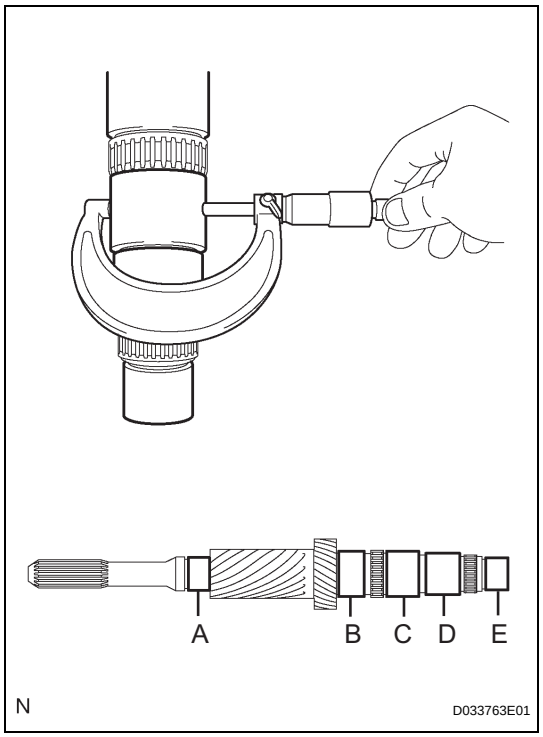

(b) Using a micrometer, measure the outer diameters of the input shaft journal surface, at the specified positions.

Standard

Part	Outer diameter mm (in.)
A	34.002 to 34.015 (1.3387 to 1.3392)
B	44.985 to 45.000 (1.7711 to 1.7717)
C	44.985 to 45.000 (1.7711 to 1.7717)
D	41.985 to 42.000 (1.6530 to 1.6535)
E	32.967 to 32.974 (1.2979 to 1.2982)

Minimum

Part	Outer diameter mm (in.)
A	34.002 (1.3387)
B	44.985 (1.7711)
C	44.985 (1.7711)
D	41.985 (1.6530)
E	32.967 (1.2979)

If any of the outer diameters are less than the minimum, replace the input shaft.

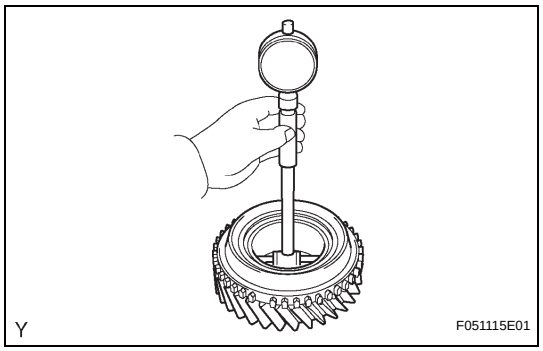

2. INSPECT 6TH GEAR

(a) Using a cylinder gauge, measure the inside diameter of the 6th gear.

Standard inside diameter:
51.015 to 51.040 mm (2.0085 to 2.0095 in.)
Maximum inside diameter:
51.040 mm (2.0095 in.)

If the inside diameter exceeds the maximum, replace the 4th gear.

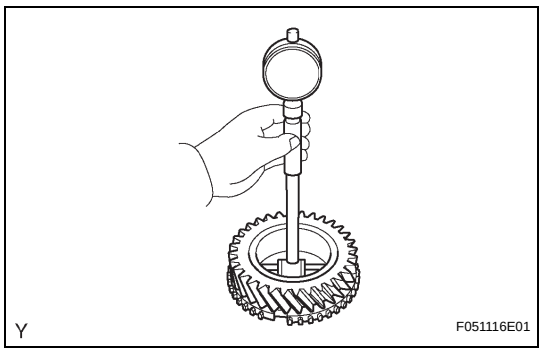

3. INSPECT 3RD GEAR

(a) Using a cylinder gauge, measure the inside diameter of the 3rd gear.

Standard inside diameter:
51.015 to 51.040 mm (2.0085 to 2.0095 in.)
Maximum inside diameter:
51.040 mm (2.0095 in.)

If the inside diameter exceeds the maximum, replace the 3rd gear.

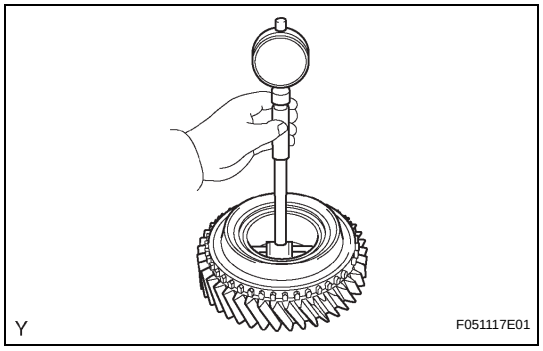

4. INSPECT 4TH GEAR

(a) Using a cylinder gauge, measure the inside diameter of the 4th gear.

Standard inside diameter:
51.015 to 51.040 mm (2.0085 to 2.0095 in.)
Maximum inside diameter:
51.040 mm (2.0095 in.)

If the inside diameter exceeds the maximum, replace the 4th gear.

MT

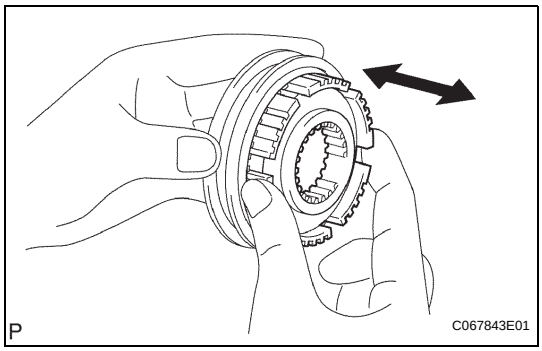

5. INSPECT NO. 2 TRANSMISSION HUB SLEEVE

(a) Check the sliding condition between the No. 2 transmission hub and No. 2 transmission hub sleeve.

(b) Check that the spline gear teeth of the No. 2 transmission hub sleeve are not worn.

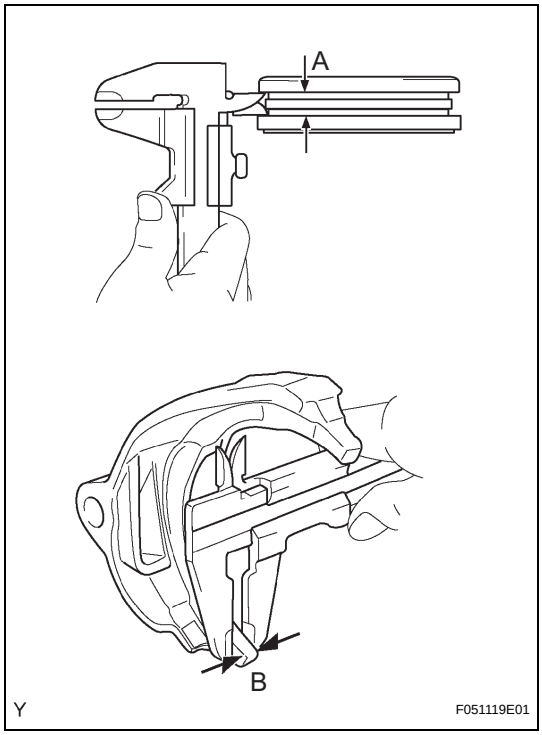

(c) Using vernier calipers, measure the width of the No. 2 transmission hub sleeve groove (A) and the thickness of the claw part on the No. 2 or No. 3 gear shift forks (B), and calculate the clearance.

Standard clearance:

(A - B);

0.28 to 0.84 mm (0.0110 to 0.0331 in.) for No. 2 gear shift fork

0.28 to 0.65 mm (0.0110 to 0.0256 in.) for No. 3 gear shift fork

If the clearance is outside the specification, replace the No. 2 transmission hub sleeve and gear shift fork.

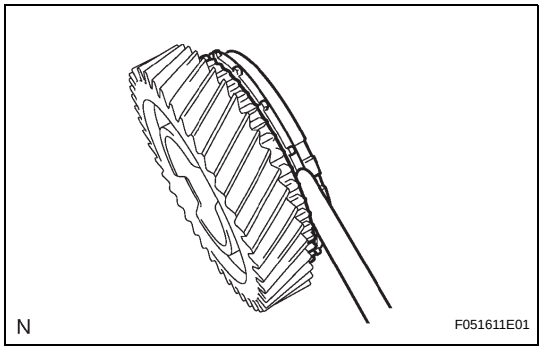

6. INSPECT NO. 3 SYNCHRONIZER RING (FOR 6TH GEAR)

(a) Using a feeler gauge, measure the clearance between the synchronizer ring and the 6th gear.

Standard clearance:

0.70 to 1.50 mm (0.0276 to 0.0591 in.)

Minimum clearance:

0.70 mm (0.0276 in.)

If the clearance is less than the minimum, replace the synchronizer ring.

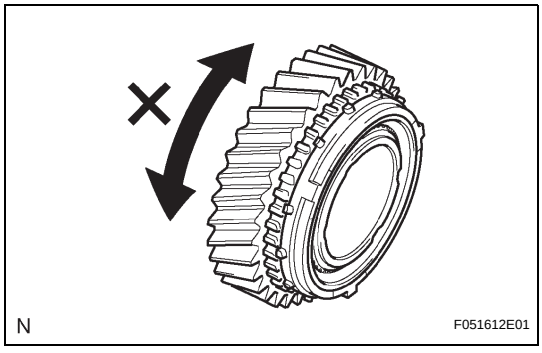

(b) Coat the 6th gear cone with gear oil. Check the braking effect of the synchronizer ring. Turn the synchronizer ring in one direction while pushing it to the 6th gear cone. Check that the ring locks.

MT

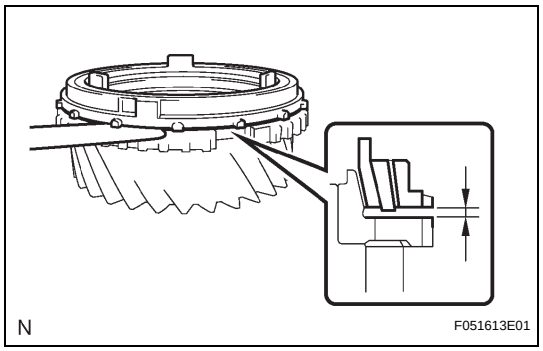

7. INSPECT NO. 2 SYNCHRONIZER RING SET (FOR 3RD GEAR)

(a) Using a feeler gauge, measure the clearance between the synchronizer ring and the 3rd gear.

Standard clearance:
Inner:
1.20 to 2.20 mm (0.0472 to 0.0866 in.)
Middle:
0.60 to 1.80 mm (0.0236 to 0.0709 in.)
Outer:
0.80 to 1.80 mm (0.0315 to 0.0709 in.)
Minimum clearance:
Inner:
1.20 mm (0.0472 in.)
Middle:
0.60 mm (0.0236 in.)
Outer:
0.80 mm (0.0315 in.)

If the clearance is less than the minimum, replace the synchronizer ring.

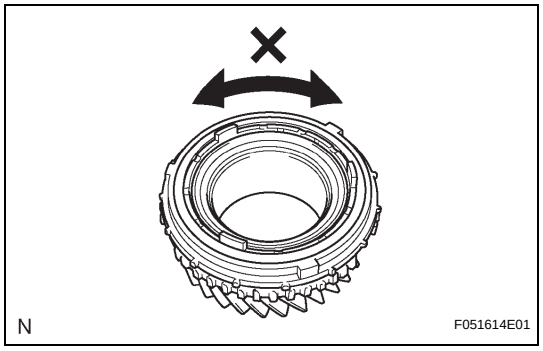

(b) Coat the 3rd gear cone with gear oil. Check the braking effect of the synchronizer ring. Turn the synchronizer ring in one direction while pushing it to the 3rd gear cone. Check that the ring locks.

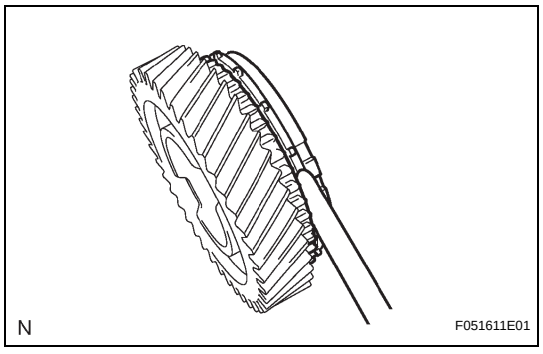

8. INSPECT NO. 3 SYNCHRONIZER RING (FOR 4TH GEAR)

(a) Using a feeler gauge, measure the clearance between the synchronizer ring and 4th gear.

Standard clearance:
0.70 to 1.50 mm (0.0276 to 0.0591 in.)
Minimum clearance:
0.70 mm (0.0276 in.)

If the clearance is less than the minimum, replace the synchronizer ring.

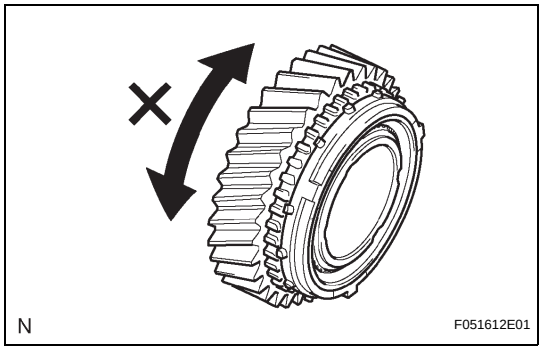

(b) Coat the 4th gear cone with gear oil. Check the braking effect of the synchronizer ring. Turn the synchronizer ring in one direction while pushing it to the 4th gear cone. Check that the ring locks.

MT

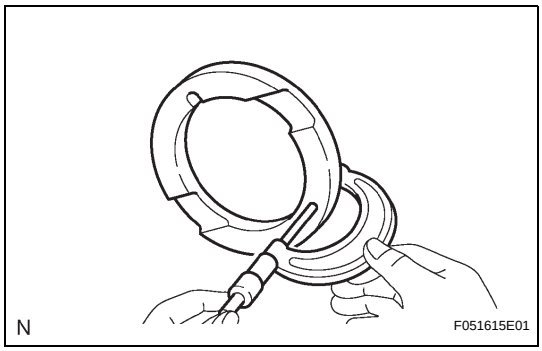

9. INSPECT 3RD GEAR THRUST WASHER

(a) Using a micrometer, measure the thrust washer thickness.

Standard thickness:
7.12 to 7.18 mm (0.2803 to 0.2827 in.)
Minimum thickness:
7.12 mm (0.2803 in.)

If the thickness is less than the minimum, replace the thrust washer.

REASSEMBLY

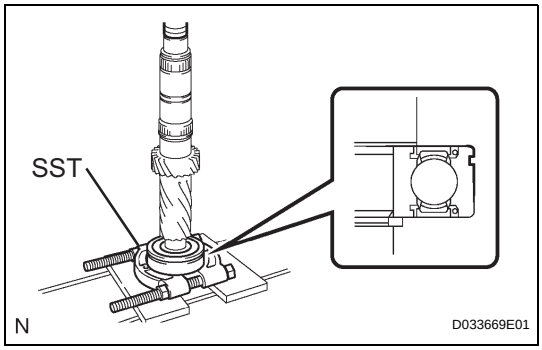

1. INSTALL INPUT SHAFT FRONT BEARING

(a) Using SST and a press, install the input shaft front bearing onto the input shaft.

SST 09950-00020

HINT:

Make sure that the groove of the bearing faces the correct direction as shown in the illustration.

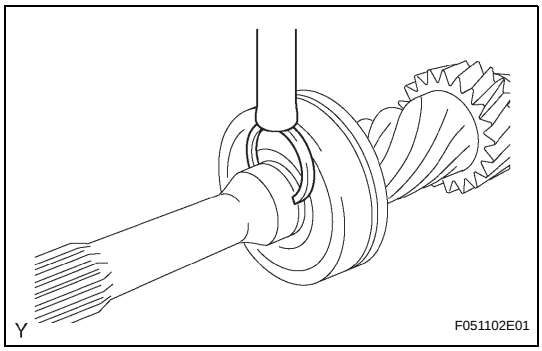

2. INSTALL INPUT SHAFT FRONT BEARING SNAP RING

(a) Select a snap ring that will allow minimum axial play.

Standard clearance:
0.1 mm (0.004 in.) or less
Snap ring thickness

Part No.	Thickness: mm (in.)	Mark
90520-31026	2.65 to 2.70 (0.1043 to 0.1063)	A
90520-31027	2.70 to 2.75 (0.1063 to 0.1083)	B
90520-31028	2.75 to 2.80 (0.1083 to 0.1102)	C
90520-31029	2.80 to 2.85 (0.1102 to 0.1122)	D
90520-31030	2.85 to 2.90 (0.1122 to 0.1142)	E
90520-31031	2.90 to 2.95 (0.1142 to 0.1161)	F

(b) Using a brass bar and hammer, install the snap ring onto the input shaft.

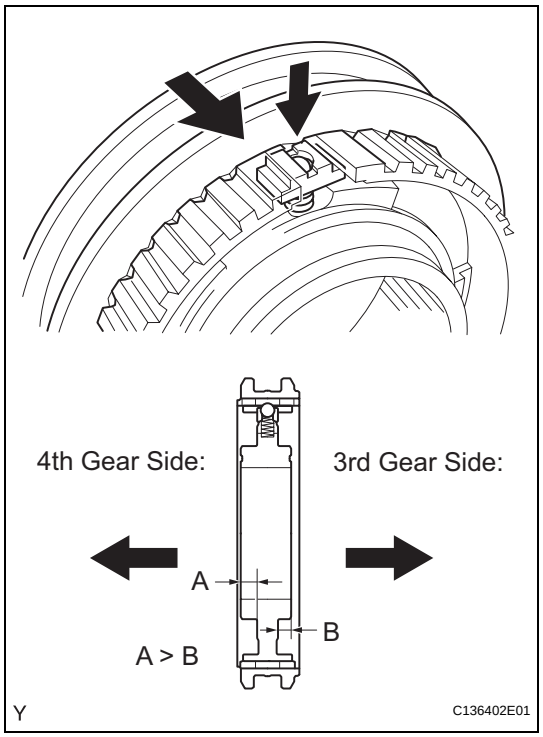

3. INSTALL NO. 2 TRANSMISSION CLUTCH HUB

(a) Apply a light coat of gear oil to the sleeve and hub.
(b) Install the clutch hub sleeve onto the No. 2 clutch hub.
(c) Put the ball into the keyhole from the bottom.(*1)
(d) Put the spring under the ball.(*2)
(e) Insert the ball and spring into the No. 2 clutch hub while attached onto the key.(*3)

NOTICE:
Prevent the ball from flying off.

HINT:
- Perform the same procedure (*1 through *3) for all the 3 portions.
- Make sure that the No. 2 clutch hub faces the correct direction as shown in the illustration.

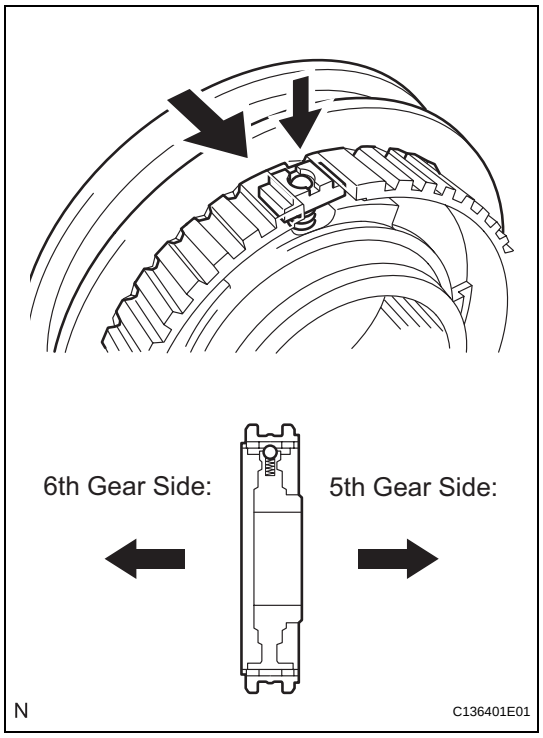

4. INSTALL NO. 3 TRANSMISSION CLUTCH HUB

(a) Apply a light coat of gear oil to the sleeve and hub.
(b) Install the clutch hub sleeve onto the No. 3 clutch hub.
(c) Put the ball into the keyhole from the bottom.(*1)
(d) Put the spring under the ball.(*2)
(e) Insert the ball and spring into the No. 3 clutch hub while attached onto the key.(*3)

NOTICE:
Prevent the ball from flying off.

HINT:
- Perform the same procedure (*1 through *3) for all the 3 portions.
- Make sure that the No. 3 clutch hub faces the correct direction as shown in the illustration.

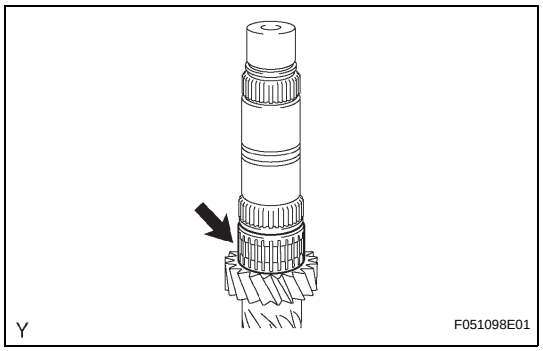

5. INSTALL 4TH GEAR NEEDLE ROLLER BEARING

(a) Coat the 4th gear needle roller bearing with gear oil, then install it onto the input shaft.

6. INSTALL 4TH GEAR

(a) Coat the 4th gear and No. 3 synchronizer ring with gear oil, then install them onto the input shaft.

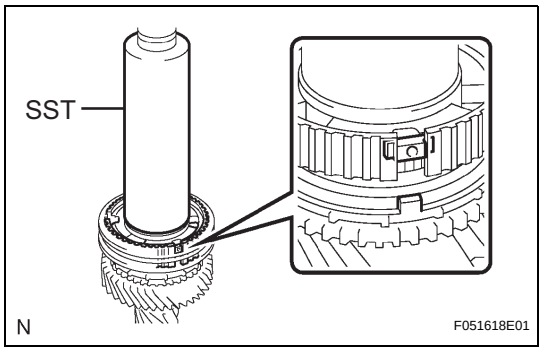

(b) Using SST and a press, install the No. 2 clutch hub onto the input shaft.
SST 09308-14010
HINT:
Align the convex portion of the synchronizer ring with the groove of the clutch hub.

(c) Install the clutch hub and confirm that the gear and synchronizer ring move smoothly.

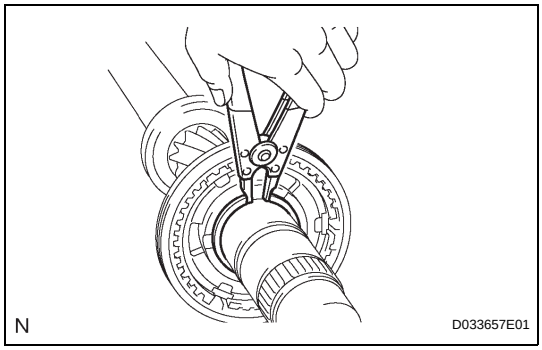

7. INSTALL CLUTCH HUB NO.2 SETTING SHAFT SNAP RING

(a) Select a snap ring that will allow minimum axial play.
Standard clearance:
0.1 mm (0.004 in.) or less
Snap ring thickness

Part No.	Thickness: mm (in.)	Mark
90520-42012	1.77 to 1.82 (0.0697 to 0.0717)	A
90520-42013	1.82 to 1.87 (0.0717 to 0.0736)	B
90520-42014	1.87 to 1.92 (0.0736 to 0.0756)	C
90520-42015	1.92 to 1.97 (0.0756 to 0.0776)	D
90520-42016	1.97 to 2.02 (0.0776 to 0.0795)	E
90520-42017	2.02 to 2.07 (0.0795 to 0.0815)	F
90520-42018	2.07 to 2.12 (0.0815 to 0.0835)	G

(b) Using a snap ring expander, install the snap ring onto the input shaft.

8. INSTALL NO. 2 SYNCHRONIZER RING SET

(a) Coat the No. 2 synchronizer ring set with gear oil, then install it onto the input shaft.

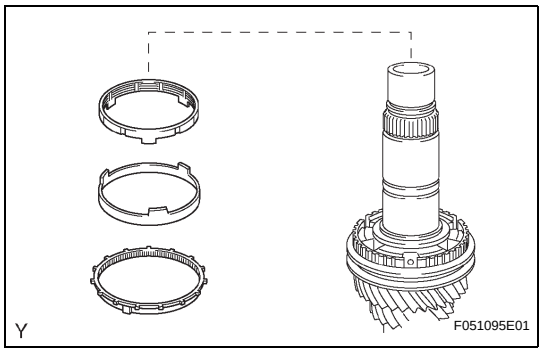

MT

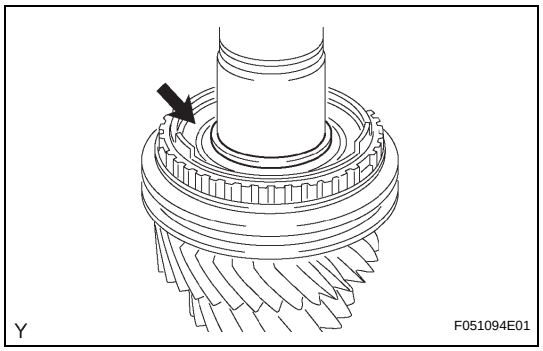

9. INSTALL SPACER

(a) Coat the spacer with gear oil, and install it onto the input shaft.

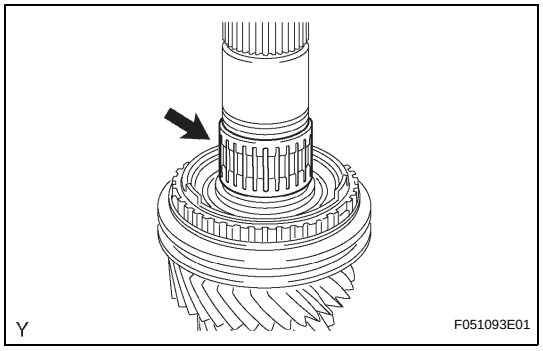

10. INSTALL 3RD GEAR NEEDLE ROLLER BEARING

(a) Coat the 3rd gear needle roller bearing with gear oil, and install it onto the input shaft.

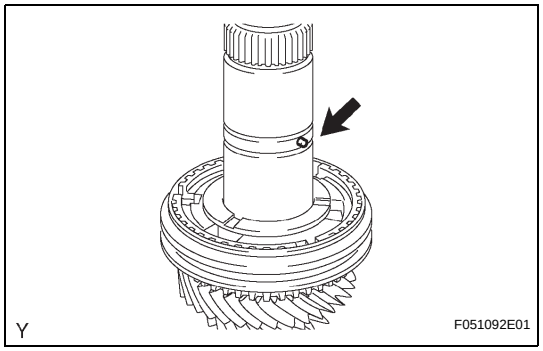

11. INSTALL STRAIGHT PIN

(a) Install the straight pin into the input shaft.

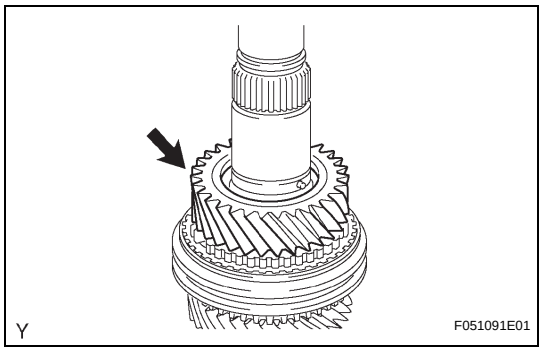

12. INSTALL 3RD GEAR

(a) Coat the 3rd gear with gear oil, and install it onto the input shaft.

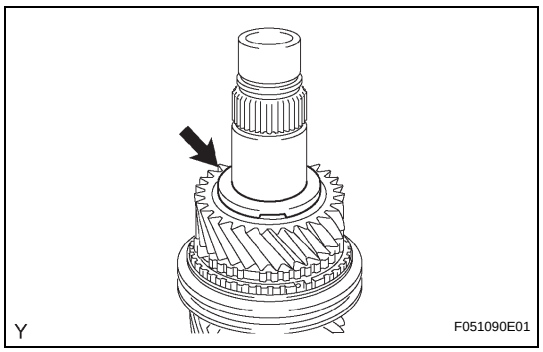

13. INSTALL 3RD GEAR THRUST WASHER

(a) Coat the 3rd gear thrust washer with gear oil, and install it onto the input shaft.
HINT:
Align the straight pin with the groove of the gear thrust washer and install it.

MT

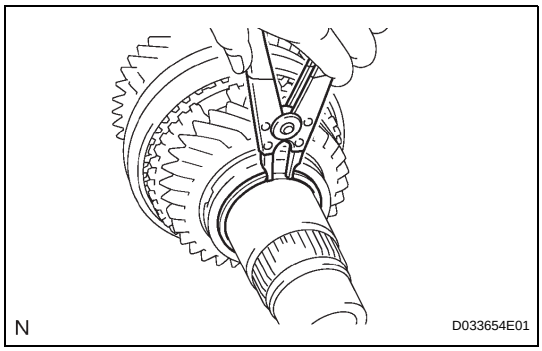

14. INSTALL GEAR THRUST WASHER SHAFT SNAP RING

(a) Select a snap ring that will allow minimum axial play.

Standard clearance:
0.1 mm (0.004 in.) or less
Snap ring thickness

Part No.	Thickness: mm (in.)	Mark
90520-39026	2.07 to 2.12 (0.0815 to 0.0835)	A
90520-39027	2.12 to 2.17 (0.0835 to 0.0854)	B
90520-39028	2.17 to 2.22 (0.0854 to 0.0874)	C
90520-39029	2.22 to 2.27 (0.0874 to 0.0894)	D
90520-39030	2.27 to 2.32 (0.0894 to 0.0913)	E
90520-39031	2.32 to 2.37 (0.0913 to 0.0933)	F

(b) Using a snap ring expander, install the snap ring onto the input shaft.

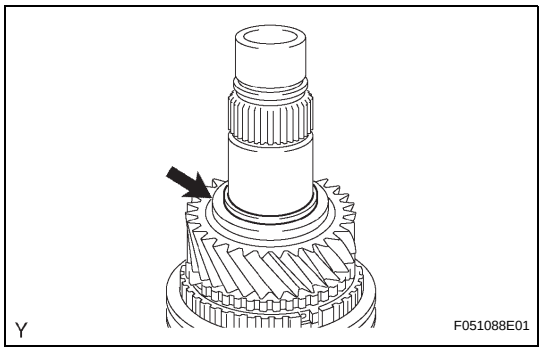

15. INSTALL SHAFT SNAP RING

(a) Coat the shaft snap ring with gear oil, and install it onto the input shaft.

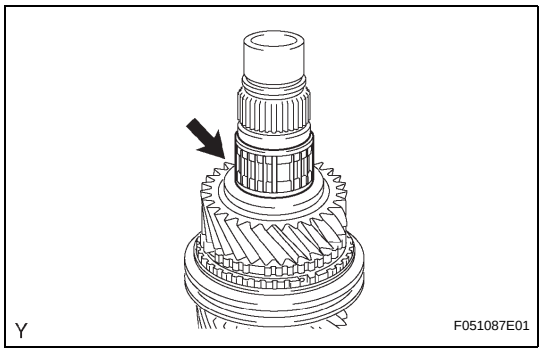

16. INSTALL 6TH GEAR NEEDLE ROLLER BEARING

(a) Coat the 6th gear needle roller bearing with gear oil, and install it onto the input shaft.

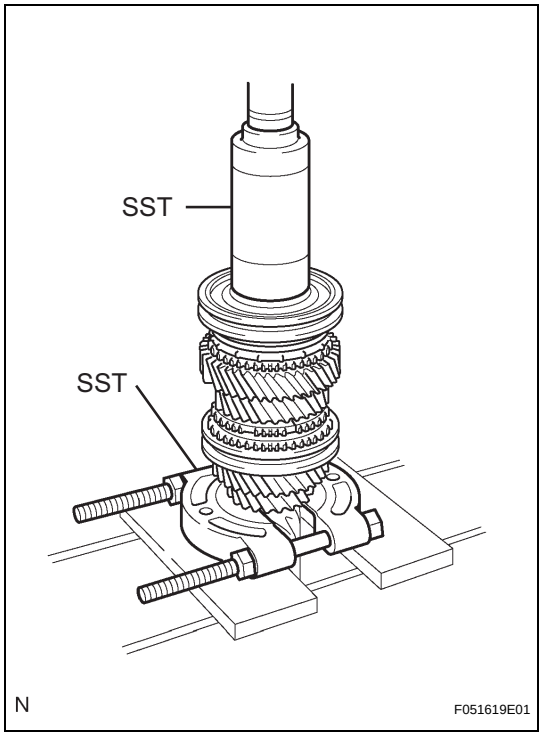

17. INSTALL 6TH GEAR

(a) Install the 6th gear onto the input shaft.
(b) Install the synchronizer ring onto the input shaft.
(c) Using SST and a press, install the clutch hub onto the input shaft.
SST 09309-37010, 09950-00020
(d) Install the clutch hub and confirm that the gear and synchronizer ring move smoothly.

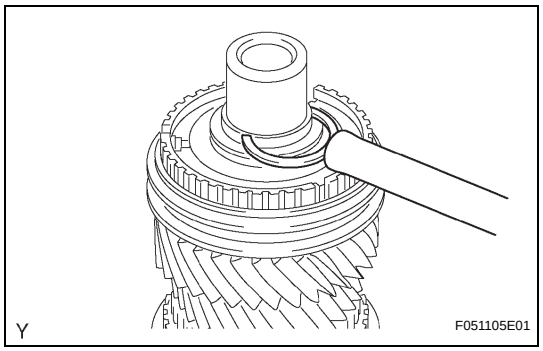

18. INSTALL TRANSMISSION CLUTCH HUB NO.3 SHAFT SNAP RING

(a) Select a snap ring that will allow minimum axial play.
Standard clearance:
0.1 mm (0.004 in.) or less
Snap ring thickness

Part No.	Thickness: mm (in.)	Mark
90520-33022	2.10 to 2.15 (0.0827 to 0.0847)	A
90520-33023	2.15 to 2.20 (0.0847 to 0.0866)	B
90520-33024	2.20 to 2.25 (0.0866 to 0.0886)	C
90520-33025	2.25 to 2.30 (0.0886 to 0.0906)	D
90520-33026	2.30 to 2.35 (0.0906 to 0.0925)	E
90520-33027	2.35 to 2.40 (0.0925 to 0.0945)	F
90520-33028	2.40 to 2.45 (0.0945 to 0.0965)	G

(b) Using a brass bar and a hammer, install the snap ring onto the input shaft.

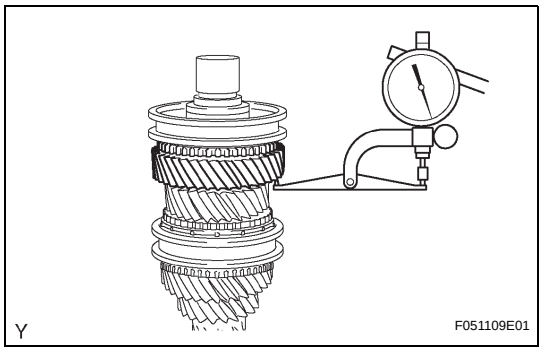

19. INSPECT 6TH GEAR THRUST CLEARANCE

(a) Using a dial indicator, measure the 6th gear thrust clearance.

Standard clearance:

0.20 to 0.49 mm (0.0079 to 0.0193 in.)

If the clearance is outside the specification, replace the defective gear, spacer or shaft.

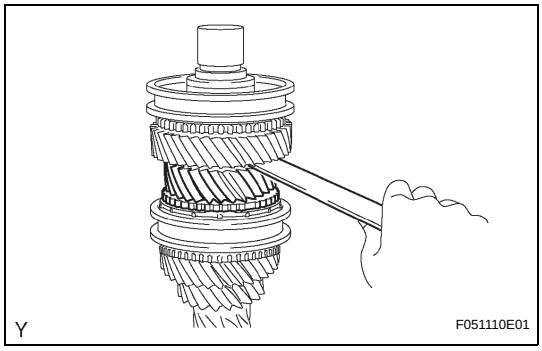

20. INSPECT 3RD GEAR THRUST CLEARANCE

(a) Using a feeler gauge, measure the 3rd gear thrust clearance.

Standard clearance:

0.09 to 0.52 mm (0.0035 to 0.0205 in.)

If the clearance is outside the specification, replace the defective gear, thrust washer, clutch hub or shaft.

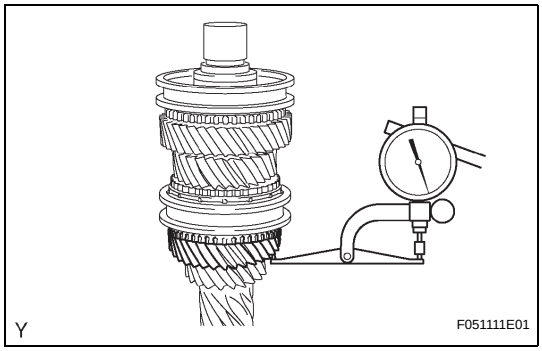

21. INSPECT 4TH GEAR THRUST CLEARANCE

(a) Using a dial indicator, measure the 4th gear thrust clearance.

Standard clearance:

0.12 to 0.38 mm (0.0047 to 0.0150 in.)

If the clearance is outside the specification, replace the defective gear, clutch hub or shaft.

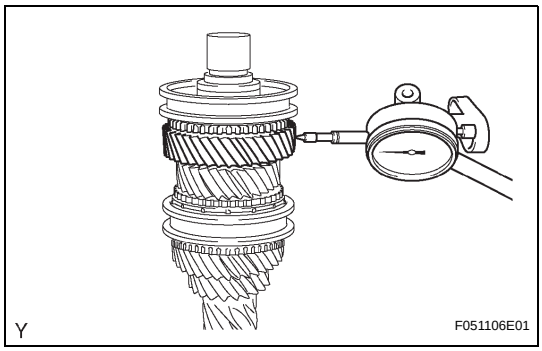

22. INSPECT 6TH GEAR RADIAL CLEARANCE

(a) Using a dial indicator, measure the 6th gear radial clearance.

Standard clearance:

0.015 to 0.065 mm (0.0006 to 0.0026 in.)

If the clearance is outside the specification, replace the defective gear, needle roller bearing or shaft.

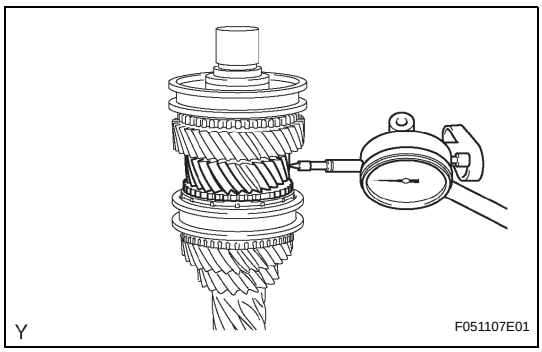

23. INSPECT 3RD GEAR RADIAL CLEARANCE

(a) Using a dial indicator, measure the 3rd gear radial clearance.

Standard clearance:

0.015 to 0.067 mm (0.0006 to 0.0026 in.)

If the clearance is outside the specification, replace the defective gear, needle roller bearing or shaft.

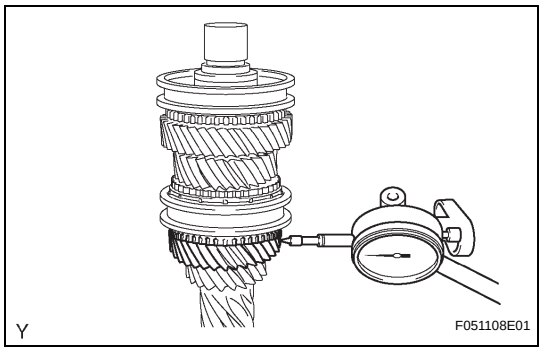

24. INSPECT 4TH GEAR RADIAL CLEARANCE

(a) Using a dial indicator, measure the 4th gear radial clearance.

Standard clearance:

0.015 to 0.067 mm (0.0006 to 0.0026 in.)

If the clearance is outside the specification, replace the defective gear, needle roller bearing or shaft.

OUTPUT SHAFT

COMPONENTS

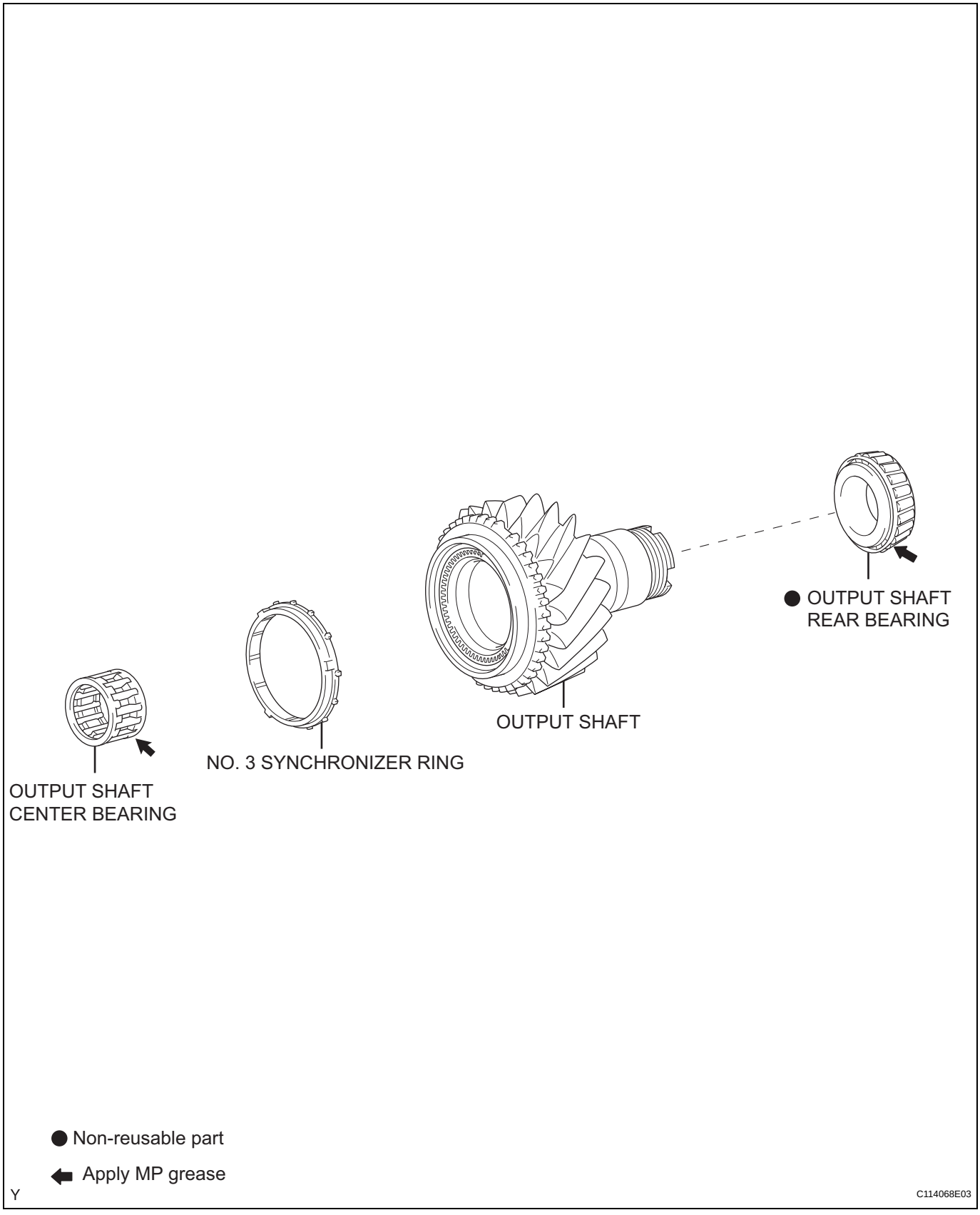

MT

DISASSEMBLY

1. REMOVE NO. 3 SYNCHRONIZER RING

(a) Remove the No. 3 synchronizer ring from the output shaft.

2. REMOVE OUTPUT SHAFT CENTER BEARING

(a) Remove the output shaft center bearing from the output shaft.

3. REMOVE OUTPUT SHAFT REAR BEARING

(a) Using SST and a press, remove the output shaft rear bearing from the output shaft.

SST 09950-00020, 09950-70010 (09951-07100), 09950-60010 (09951-00510)

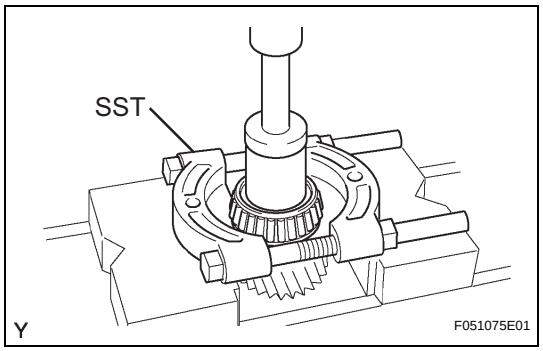

INSPECTION

1. INSPECT OUTPUT SHAFT

(a) Using a cylinder gauge, measure the inside diameter of the output shaft.

Standard inside diameter:
45.017 to 45.025 mm (1.7723 to 1.7726 in.)
Maximum inside diameter:
45.025 mm (1.7726 in.)

If the diameter exceeds the maximum, replace the output shaft.

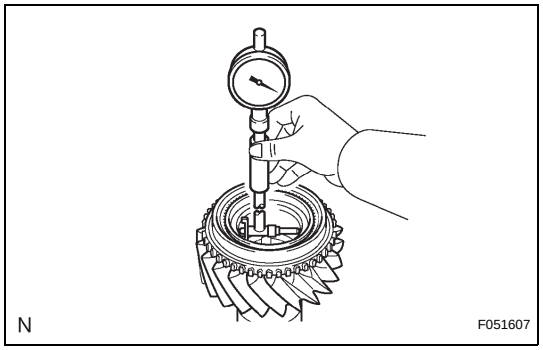

2. INSPECT NO. 3 SYNCHRONIZER RING

(a) Using a feeler gauge, measure the clearance between the synchronizer ring and gear spline.

Standard clearance:
0.70 to 1.50 mm (0.0276 to 0.0591 in.)
Minimum clearance:
0.70 mm (0.0276 in.)

If the clearance is less than the minimum, replace the synchronizer ring.

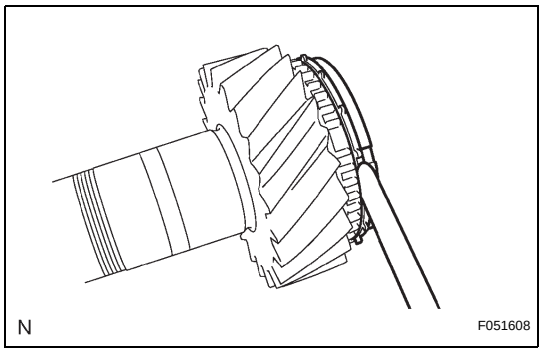

(b) Coat the output shaft and synchronizer ring cone with gear oil. Check the braking effect of the synchronizer ring. Turn the synchronizer ring in one direction while pushing it to the gear cone. Check that the ring locks.

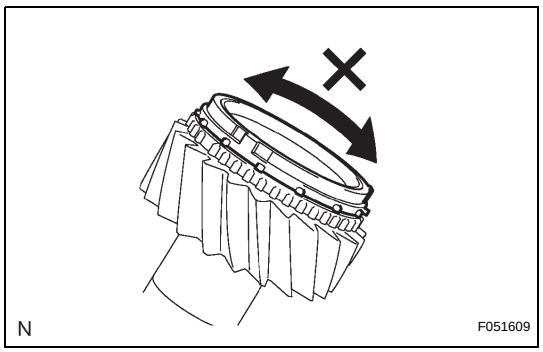

MT

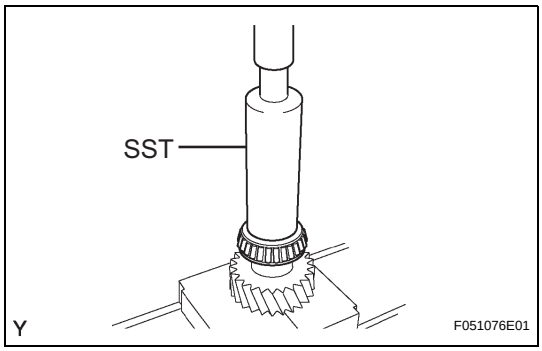

REASSEMBLY

1. INSTALL OUTPUT SHAFT REAR BEARING

(a) Using SST and a press, install a new output shaft rear bearing onto the output shaft.
SST 09316-60011 (09316-00011)

(b) Apply a light coat of MP grease to the bearing.

2. INSTALL OUTPUT SHAFT CENTER BEARING

(a) Apply gear grease to the output shaft center bearing and install it onto the output shaft.

3. INSTALL NO. 3 SYNCHRONIZER RING

(a) Apply gear oil to the No. 3 synchronizer ring, and install it onto the output shaft.

COUNTER GEAR AND REVERSE IDLER GEAR

COMPONENTS

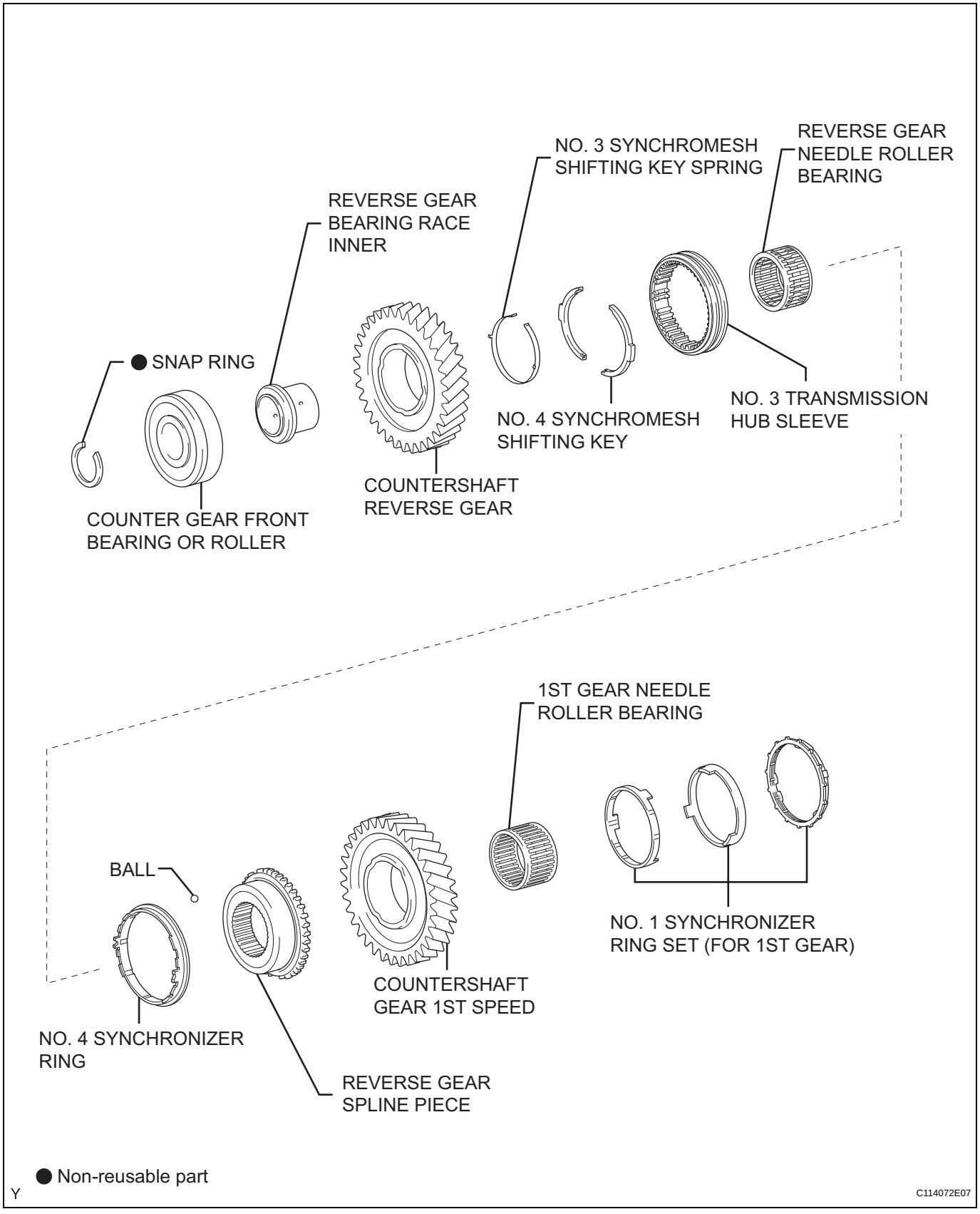

MT

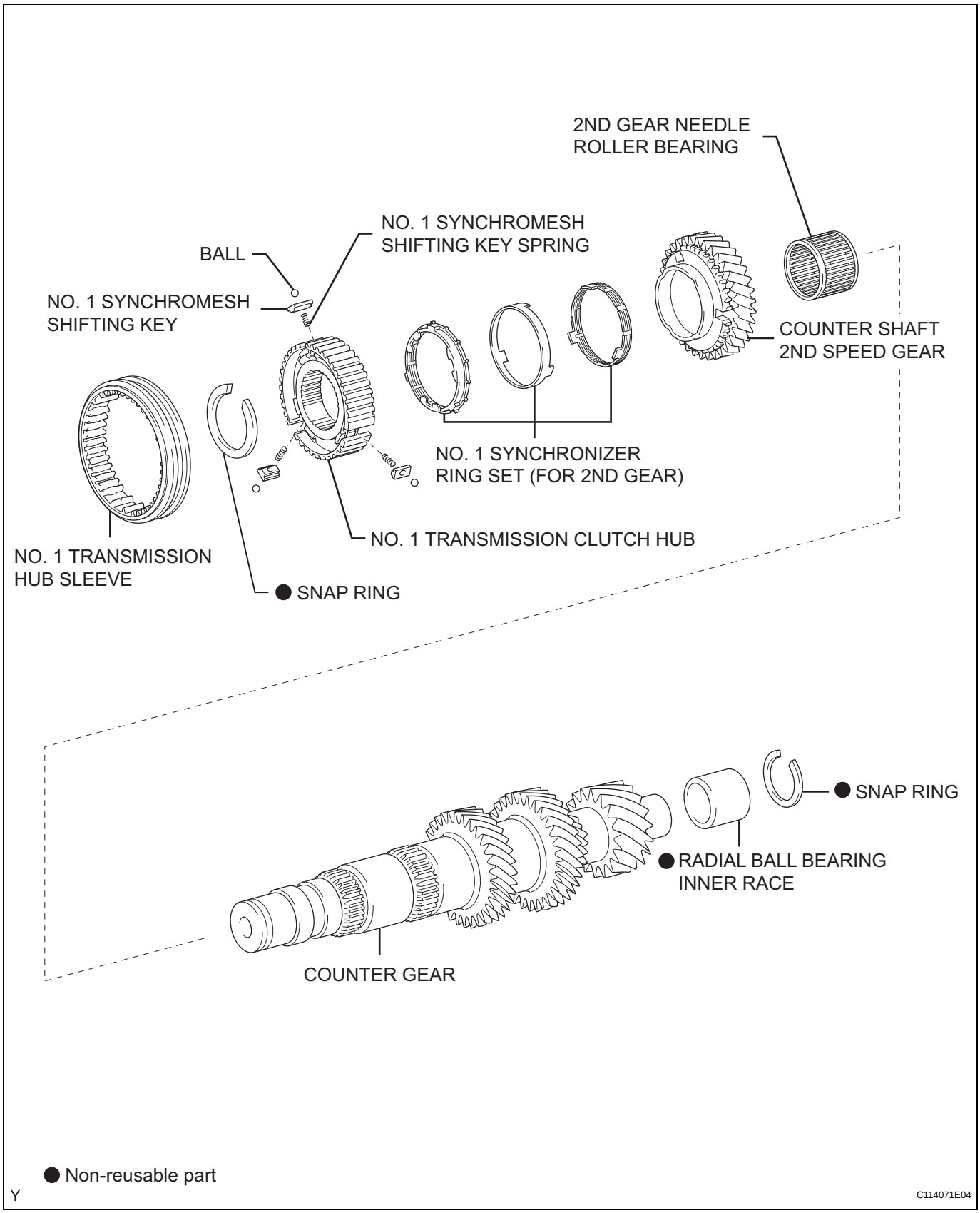
2ND GEAR NEEDLE ROLLER BEARING
NO. 1 SYNCHROMESH SHIFTING KEY SPRING
BALL
NO. 1 SYNCHROMESH SHIFTING KEY
COUNTER SHAFT 2ND SPEED GEAR
NO. 1 SYNCHRONIZER RING SET (FOR 2ND GEAR)
NO. 1 TRANSMISSION CLUTCH HUB
NO. 1 TRANSMISSION HUB SLEEVE
● SNAP RING
● SNAP RING
● RADIAL BALL BEARING INNER RACE
COUNTER GEAR
● Non-reusable part
Y
C114071E04

MT

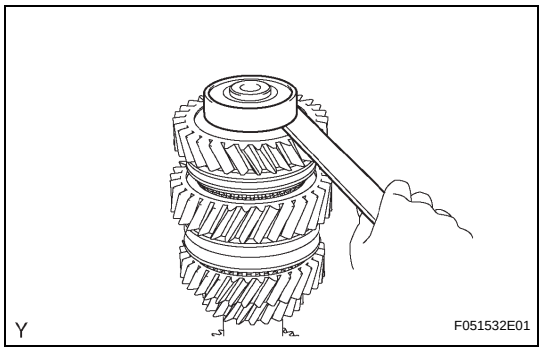

DISASSEMBLY

1. INSPECT REVERSE GEAR THRUST CLEARANCE

(a) Using a feeler gauge, measure the reverse gear thrust clearance.

Standard clearance:

0.125 to 0.375 mm (0.0049 to 0.0148 in.)

If the clearance is outside the specification, replace the defective gear, spline piece or bearing race.

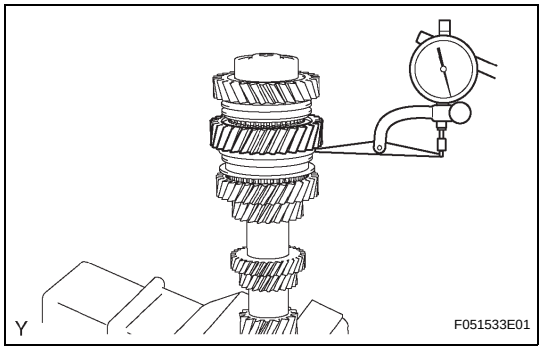

2. INSPECT 1ST GEAR THRUST CLEARANCE

(a) Using a dial indicator, measure the 1st gear thrust clearance.

Standard clearance:

0.10 to 0.43 mm (0.0039 to 0.0169 in.)

If the clearance is outside the specification, replace the defective gear, clutch hub, spline piece or counter gear.

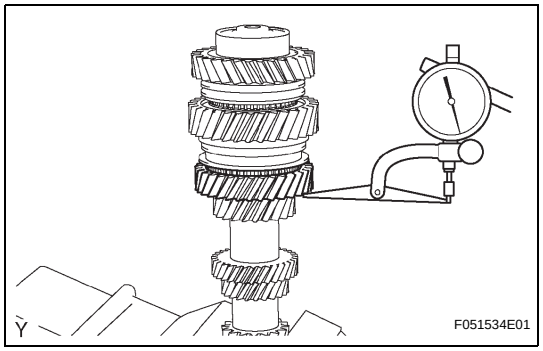

3. INSPECT 2ND GEAR THRUST CLEARANCE

(a) Using a dial indicator, measure the 2nd gear thrust clearance.

Standard clearance:

0.10 to 0.43 mm (0.0039 to 0.0169 in.)

If the clearance is outside the specification, replace the defective gear, clutch hub or counter gear.

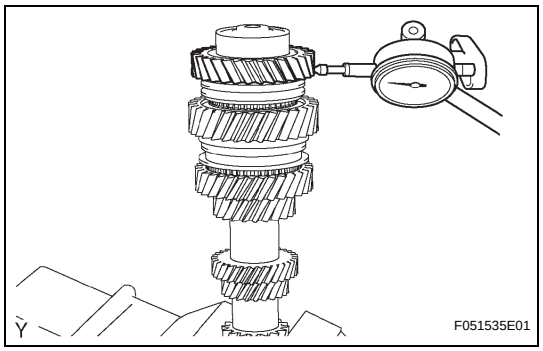

4. INSPECT REVERSE GEAR RADIAL CLEARANCE

(a) Using a dial indicator, measure the reverse gear radial clearance.

Standard clearance:

0.015 to 0.065 mm (0.0006 to 0.0026 in.)

If the clearance is outside the specification, replace the reverse gear needle roller bearing or shaft.

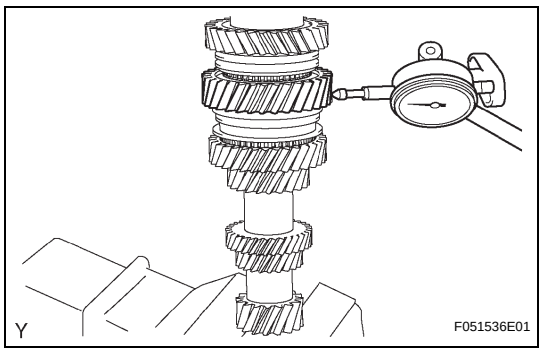

5. INSPECT 1ST GEAR RADIAL CLEARANCE

(a) Using a dial indicator, measure the 1st gear radial clearance.

Standard clearance:

0.015 to 0.067 mm (0.0006 to 0.0026 in.)

If the clearance is outside the specification, replace the 1st gear needle roller bearing or shaft.

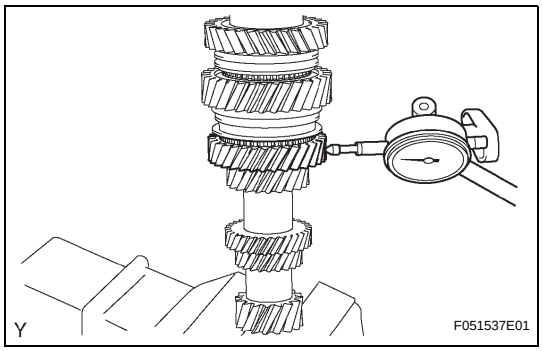

6. INSPECT 2ND GEAR RADIAL CLEARANCE

(a) Using a dial indicator, measure the 2nd gear radial clearance.

Standard clearance:

0.015 to 0.067 mm (0.0006 to 0.0026 in.)

If the clearance is outside the specification, replace the 2nd gear needle roller bearing or shaft.

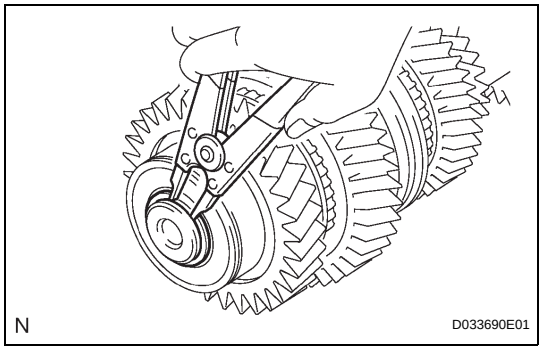

7. REMOVE COUNTER GEAR FRONT BEARING SNAP RING NO.1

(a) Using a snap ring expander, remove the snap ring from the counter gear.

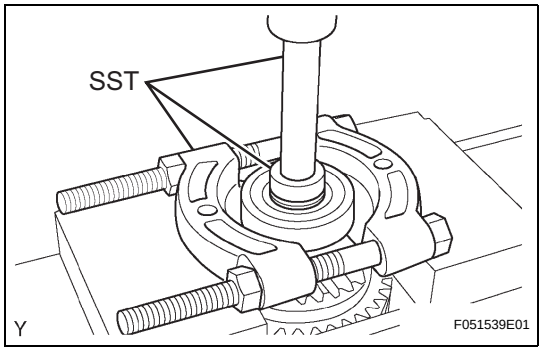

8. REMOVE COUNTER GEAR FRONT BEARING OR ROLLER

(a) Using SST and a press, remove the counter gear front bearing or roller from the counter gear.

SST 09950-00020, 09950-70010 (09951-07100), 09950-60010 (09951-00320)

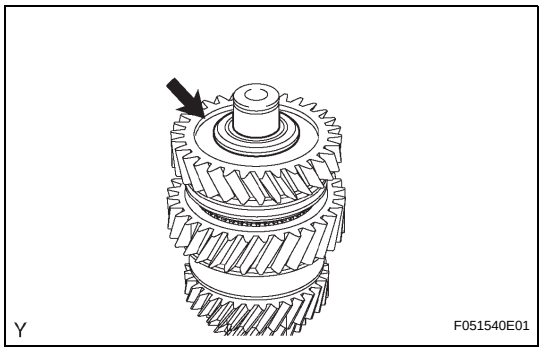

9. REMOVE REVERSE GEAR BEARING RACE INNER

(a) Remove the reverse gear bearing race inner from the counter gear.

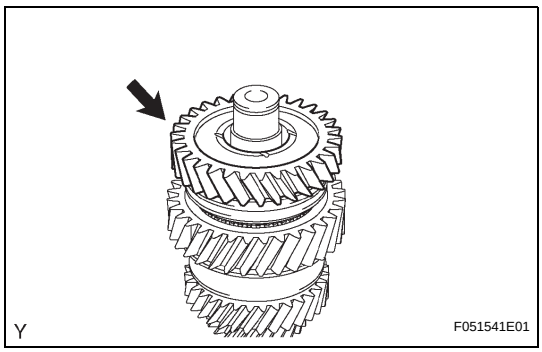

10. REMOVE COUNTERSHAFT REVERSE GEAR

(a) Remove the countershaft reverse gear from the counter gear.

(b) Remove the hub sleeve, 2 shifting keys and key spring from the countershaft reverse gear.

MT

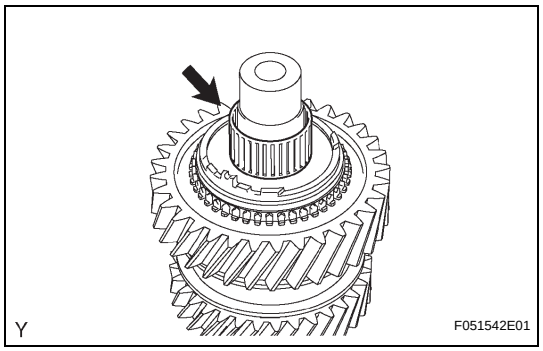

11. REMOVE REVERSE GEAR NEEDLE ROLLER BEARING

(a) Remove the reverse gear needle roller bearing from the counter gear.

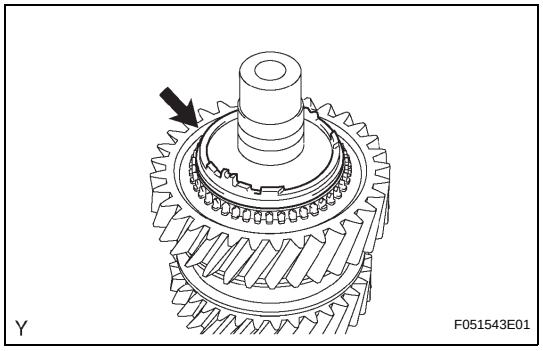

12. REMOVE NO. 4 SYNCHRONIZER RING

(a) Remove the No. 4 synchronizer ring from the counter gear.

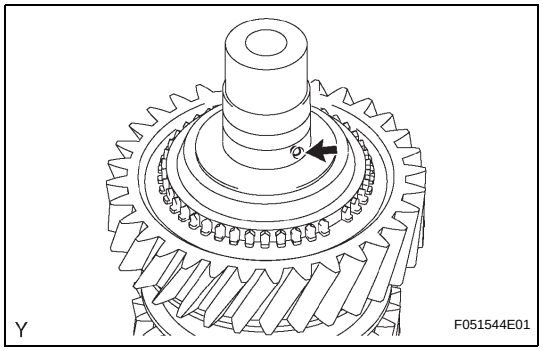

13. REMOVE BALL

(a) Remove the ball from the counter gear.

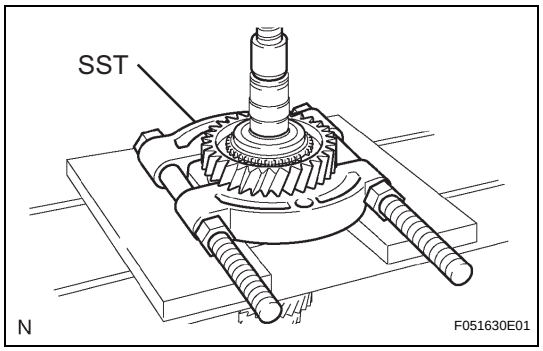

14. REMOVE COUNTERSHAFT GEAR 1ST SPEED

(a) Using a press, remove the countershaft gear 1st speed together with the reverse gear spline piece from the counter gear.

SST 09950-00020

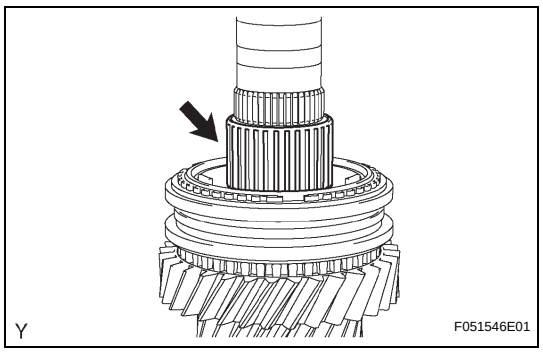

15. REMOVE 1ST GEAR NEEDLE ROLLER BEARING

(a) Remove the 1st gear needle roller bearing from the counter gear.

MT

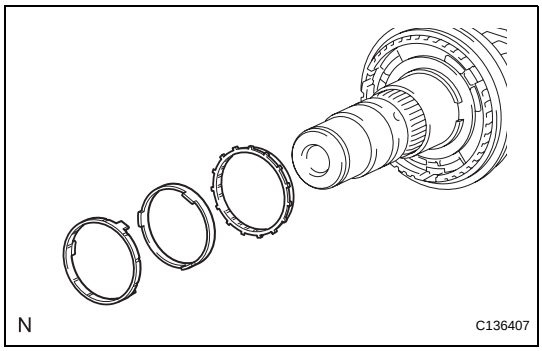

16. REMOVE NO. 1 SYNCHRONIZER RING SET (FOR 1ST GEAR)

(a) Remove the No. 1 synchronizer ring set from the counter gear.

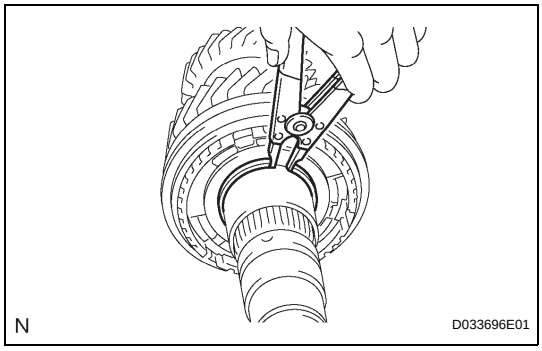

17. REMOVE CLUTCH HUB NO.1 SHAFT SNAP RING

(a) Using a snap ring expander, remove the snap ring from the counter gear.

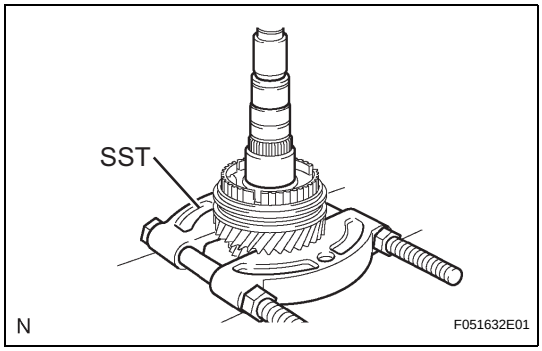

18. REMOVE COUNTER SHAFT 2ND SPEED GEAR

(a) Using a press, remove the counter shaft 2nd speed gear together with the No. 1 transmission clutch hub from the counter gear.
SST 09950-00020

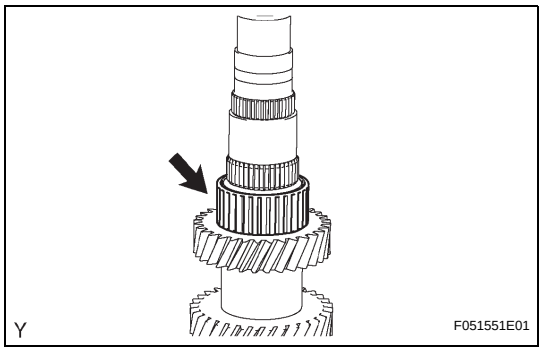

19. REMOVE 2ND GEAR NEEDLE ROLLER BEARING

(a) Remove the 2nd needle roller bearing from the counter gear.

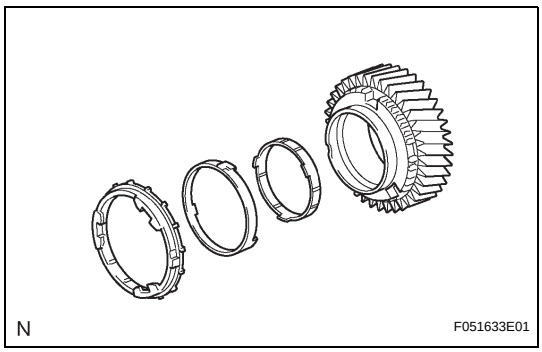

20. REMOVE NO. 1 SYNCHRONIZER RING SET (FOR 2ND GEAR)

(a) Remove the No. 1 synchronizer ring set from the 2nd gear.

MT

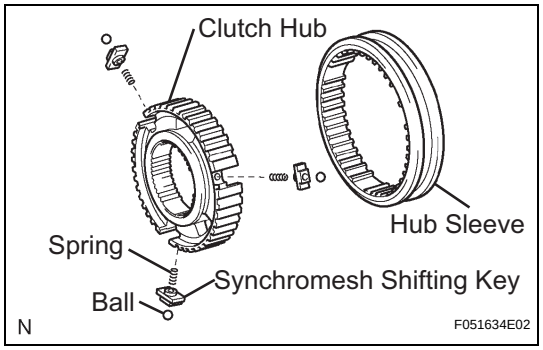

21. REMOVE NO. 1 TRANSMISSION CLUTCH HUB

(a) Remove the hub sleeve, 3 synchromesh shifting keys, 3 balls and 3 springs from the clutch hub.
HINT:
Use a shop rag or piece of cloth to prevent the ball and spring from flying off.

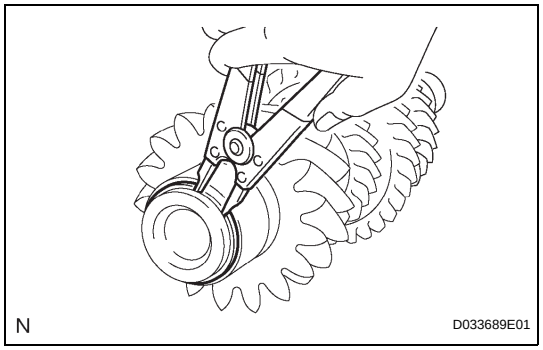

22. REMOVE SNAP RING COUNTER GEAR REAR BEARING

(a) Using a snap ring expander, remove the snap ring from the counter gear.

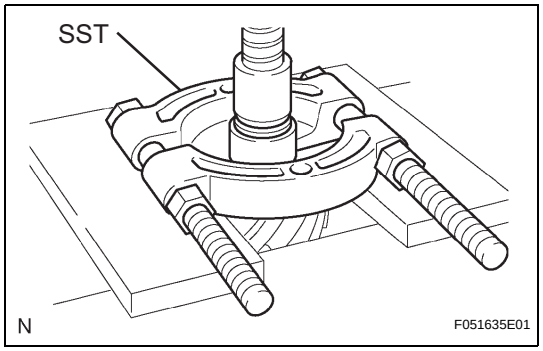

23. REMOVE RADIAL BALL BEARING INNER RACE

(a) Using SST and a press, remove the needle roller bearing inner race.
SST 09950-00020

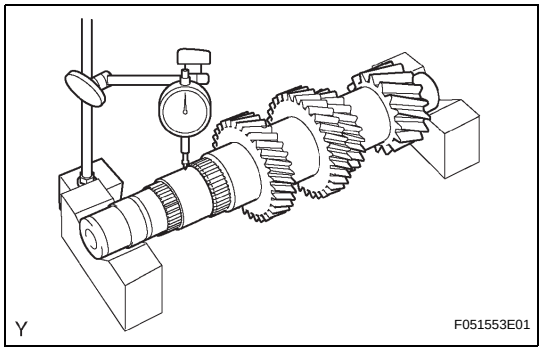

INSPECTION

1. INSPECT COUNTER GEAR

(a) Using a dial indicator and 2 V-blocks, measure the shaft runout.
Maximum runout:
0.03 mm (0.0012 in.)
If the runout exceeds the maximum, replace the counter gear.

MT

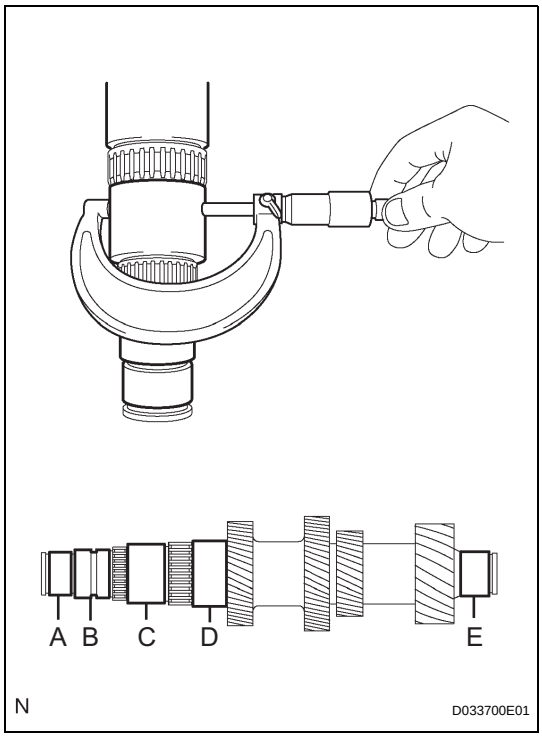

(b) Using a micrometer, measure the outer diameters of the input shaft journal surface, at the specified positions.

Standard

Part	Outer diameter mm (in.)
A	34.002 to 34.015 (1.3387 to 1.3392)
B	36.985 to 37.000 (1.4561 to 1.4567)
C	47.985 to 48.000 (1.8892 to 1.8898)
D	53.985 to 54.000 (2.1254 to 2.1260)
E	34.002 to 34.015 (1.3387 to 1.3392)

Minimum

Part	Outer diameter mm (in.)
A	34.002 (1.3387)
B	36.985 (1.4561)
C	47.985 (1.8892)
D	53.985 (2.1254)
E	34.002 (1.3387)

If any of the diameters are less than the minimum, replace the counter gear shaft.

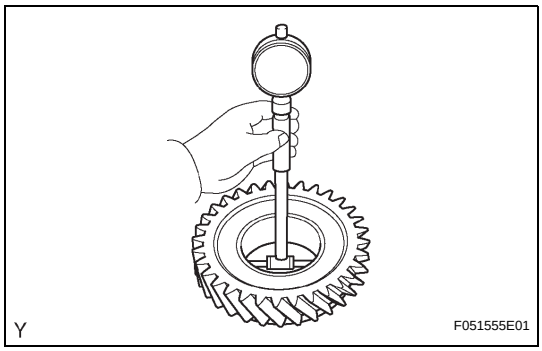

2. INSPECT COUNTERSHAFT REVERSE GEAR

(a) Using a cylinder gauge, measure the inside diameter of the reverse gear.

Standard inside diameter:
51.015 to 51.040 mm (2.0085 to 2.0095 in.)
Maximum inside diameter:
51.040 mm (2.0095 in.)

If the inside diameter exceeds the maximum, replace the reverse gear.

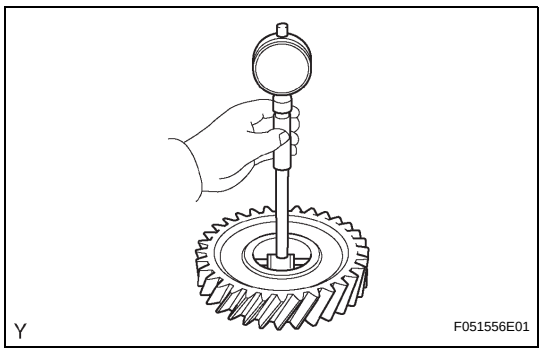

3. INSPECT COUNTERSHAFT GEAR 1ST SPEED

(a) Using a cylinder gauge, measure the inside diameter of the 1st gear.

Standard inside diameter:
54.015 to 54.040 mm (2.1266 to 2.1276 in.)
Maximum inside diameter:
54.040 mm (2.1276 in.)

If the inside diameter exceeds the maximum, replace the 1st gear.

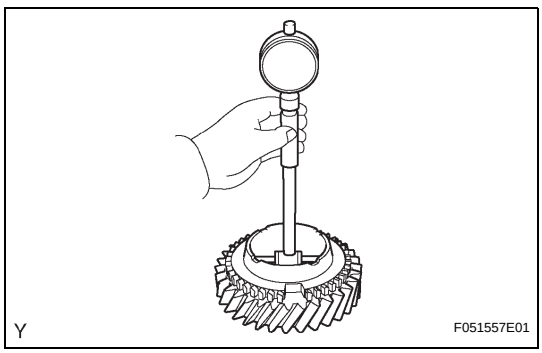

4. INSPECT COUNTER SHAFT 2ND SPEED GEAR

(a) Using a cylinder gauge, measure the inside diameter of the 2nd gear.

Standard inside diameter:
60.015 to 60.040 mm (2.3628 to 2.3638 in.)
Maximum inside diameter:
60.040 mm (2.3638 in.)

If the inside diameter exceeds the maximum, replace the 2nd gear.

MT

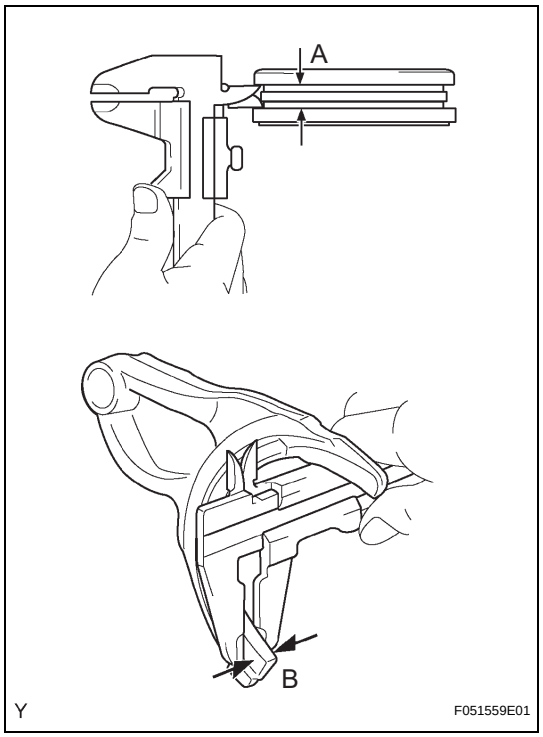

5. INSPECT NO. 3 TRANSMISSION HUB SLEEVE

(a) Using vernier calipers, measure the width of the No. 3 transmission hub sleeve groove (A) and the thickness of the claw part on the gear shift fork No. 4 (B), and calculate the clearance.

Standard clearance (A - B):

0.26 to 0.84 mm (0.0102 to 0.0331 in.)

If the clearance is outside the specification, replace the No. 3 transmission hub sleeve and No. 4 gear shift fork.

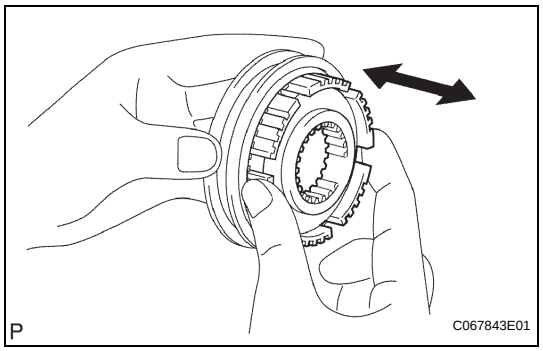

6. INSPECT NO. 1 TRANSMISSION HUB SLEEVE

(a) Check the sliding condition between the No. 1 transmission hub and No. 1 transmission hub sleeve.

(b) Check that the spline gear teeth of the No. 1 transmission hub sleeve are not worn.

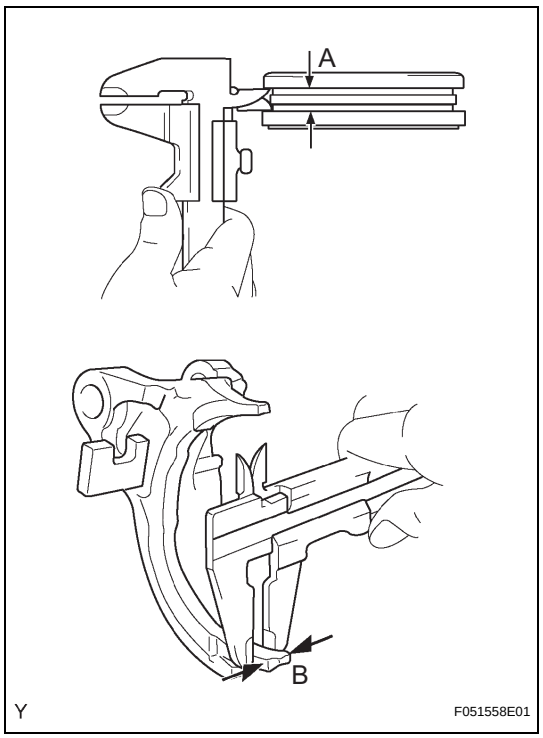

(c) Using vernier calipers, measure the width of the No. 1 transmission hub sleeve groove (A) and the thickness of the claw part on the No. 1 gear shift fork (B), and calculate the clearance.

Standard clearance (A - B):

0.15 to 0.35 mm (0.0059 to 0.0138 in.)

If the clearance is outside the specification, replace the No. 1 transmission hub sleeve and No. 1 gear shift fork.

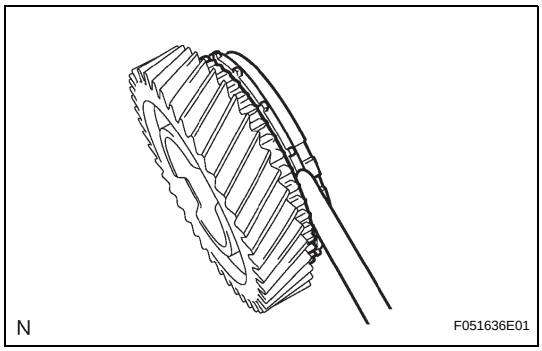

7. INSPECT NO. 4 SYNCHRONIZER RING

(a) Using a feeler gauge, measure the clearance between the synchronizer ring and reverse gear.

Standard clearance:
0.70 to 1.30 mm (0.0276 to 0.0512 in.)
Minimum clearance:
0.70 mm (0.0276 in.)

If the clearance is less than the minimum, replace the synchronizer ring.

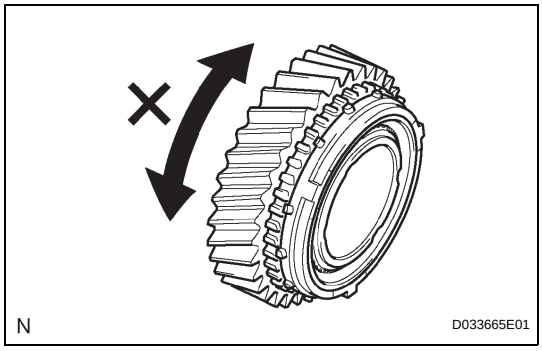

(b) Coat the reverse gear cone with gear oil. Check the braking effect of the synchronizer ring. Turn the synchronizer ring in one direction while pushing it to the reverse gear cone. Check that the ring locks.

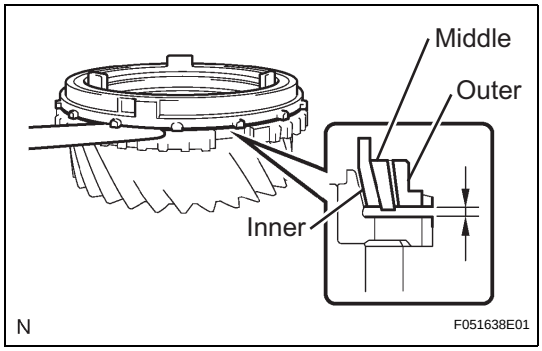

8. INSPECT NO. 1 SYNCHRONIZER RING SET (FOR 1ST GEAR)

(a) Using a feeler gauge, measure the clearance between the synchronizer ring and 1st gear.

Standard clearance:
Inner:
1.48 to 2.12 mm (0.0583 to 0.0835 in.)
Middle:
0.68 to 1.92 mm (0.0268 to 0.0756 in.)
Outer:
0.88 to 1.72 mm (0.0346 to 0.0677 in.)
Minimum clearance:
Inner:
1.48 mm (0.0583 in.)
Middle:
0.68 mm (0.0268 in.)
Outer:
0.88 mm (0.0346 in.)

If the clearance is less than the minimum, replace the synchronizer ring.

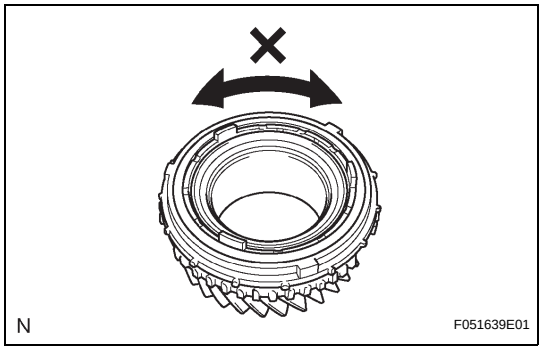

(b) Coat the 1st gear cone with gear oil. Check the braking effect of the synchronizer ring. Turn the synchronizer ring in one direction while pushing it to the 1st gear cone. Check that the ring locks.

MT

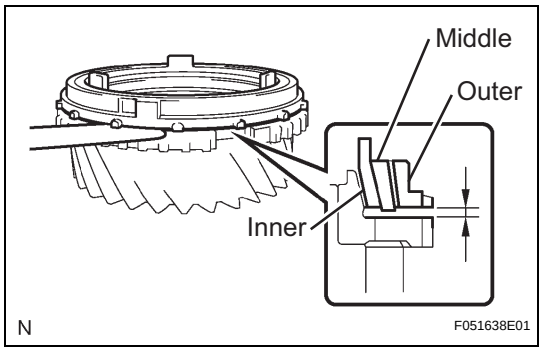

9. INSPECT NO. 1 SYNCHRONIZER RING SET (FOR 2ND GEAR)

(a) Using a feeler gauge, measure the clearance between the synchronizer ring and 2nd gear.

Standard clearance:
Inner:
1.48 to 2.12 mm (0.0583 to 0.0835 in.)
Middle:
0.68 to 1.92 mm (0.0268 to 0.0756 in.)
Outer:
0.88 to 1.72 mm (0.0346 to 0.0677 in.)
Minimum clearance:
Inner:
1.48 mm (0.0583 in.)
Middle:
0.68 mm (0.0268 in.)
Outer:
0.88 mm (0.0346 in.)

If the clearance is less than the minimum, replace the synchronizer ring.

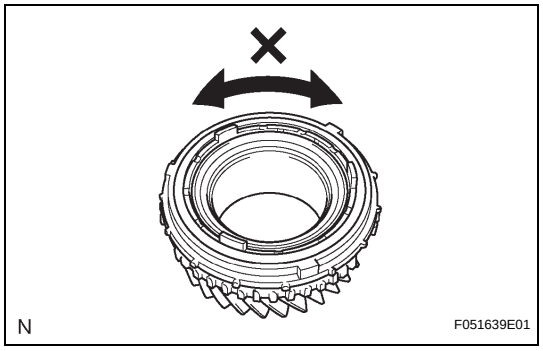

(b) Coat the 2nd gear cone with gear oil. Check the braking effect of the synchronizer ring. Turn the synchronizer ring in one direction while pushing it to the 2nd gear cone. Check that the ring locks.

REASSEMBLY

1. INSTALL RADIAL BALL BEARING INNER RACE

(a) Using SST and a press, install a new needle roller bearing inner race.

SST 09950-60010 (09951-00540)

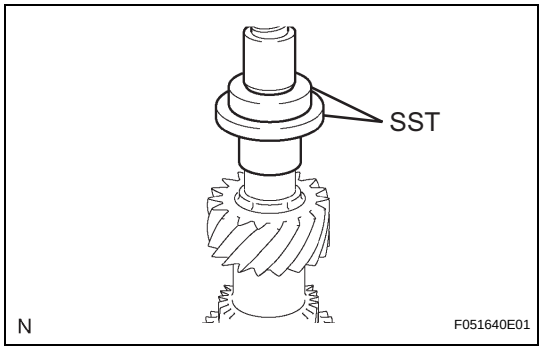

MT

2. INSTALL SNAP RING COUNTER GEAR REAR BEARING

(a) Select a snap ring that will allow minimum axial play.

Standard clearance:
0.1 mm (0.004 in.) or less
Snap ring thickness

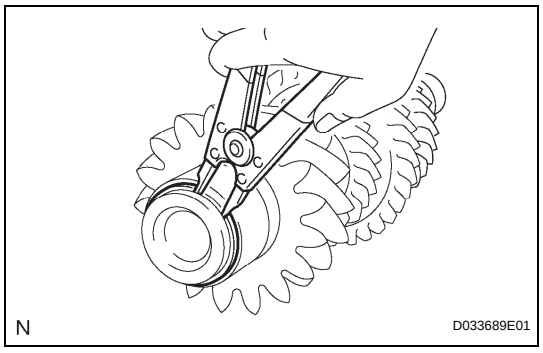

Part No.	Thickness: mm (in.)	Mark
90520-31015	2.35 to 2.40 (0.0925 to 0.0945)	A
90520-31016	2.40 to 2.45 (0.0945 to 0.0965)	B
90520-31017	2.45 to 2.50 (0.0965 to 0.0984)	C

Part No.	Thickness: mm (in.)	Mark
90520-31018	2.50 to 2.55 (0.0984 to 0.1004)	D
90520-31019	2.55 to 2.60 (0.1004 to 0.1024)	E
90520-31020	2.60 to 2.65 (0.1024 to 0.1043)	F
90520-31021	2.65 to 2.70 (0.1043 to 0.1063)	G
90520-31022	2.70 to 2.75 (0.1063 to 0.1083)	H
90520-31023	2.75 to 2.80 (0.1083 to 0.1102)	J
90520-31024	2.80 to 2.85 (0.1102 to 0.1122)	K
90520-31025	2.85 to 2.90 (0.1122 to 0.1142)	L
90520-31033	2.90 to 2.95 (0.1142 to 0.1161)	M

(b) Using a snap ring expander, install the snap ring onto the counter gear.

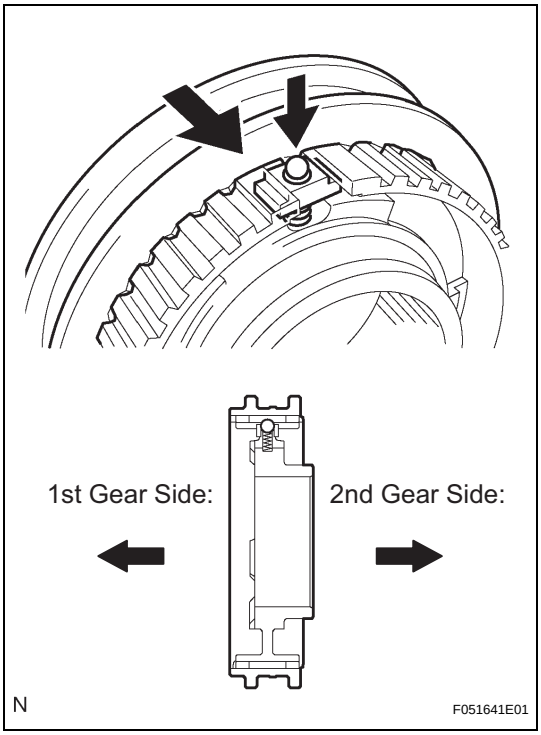

3. INSTALL NO. 1 TRANSMISSION CLUTCH HUB

(a) Apply a light coat of gear oil to the sleeve and hub.
(b) Install the clutch hub sleeve onto the clutch hub.
(c) Install the 3 shifting keys onto the clutch hub.
(d) Install the 3 shifting key springs onto the clutch hub.
(e) Place the ball in the hole in the shifting key, and install the hub sleeve while pushing in the ball.
NOTICE:
Prevent the ball from flying off.

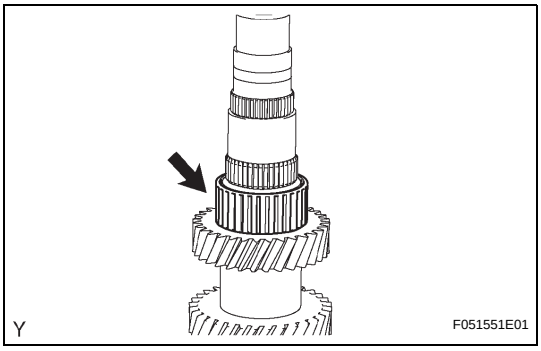

4. INSTALL 2ND GEAR NEEDLE ROLLER BEARING

(a) Coat the 2nd gear needle roller bearing with gear oil, then install it onto the counter gear.

MT

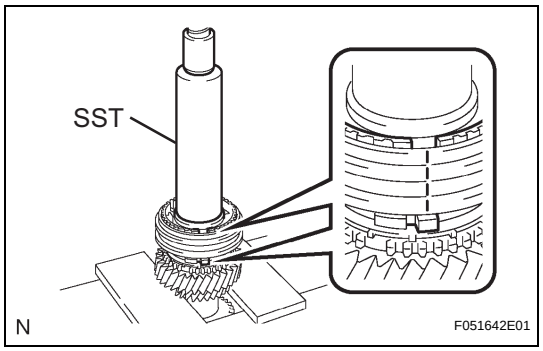

5. INSTALL COUNTER SHAFT 2ND SPEED GEAR

(a) Coat the countershaft 2nd speed gear with gear oil, then install it onto the counter gear.

(b) Coat the No. 1 synchronizer ring set with gear oil, then install it onto the counter gear.

(c) Using SST and a press, install the No. 1 transmission clutch hub onto the counter gear.

SST 09308-14010

HINT:

Align the convex portion of the synchronizer ring with the groove of the clutch hub.

(d) Install the clutch hub and confirm that the gear and synchronizer ring move smoothly.

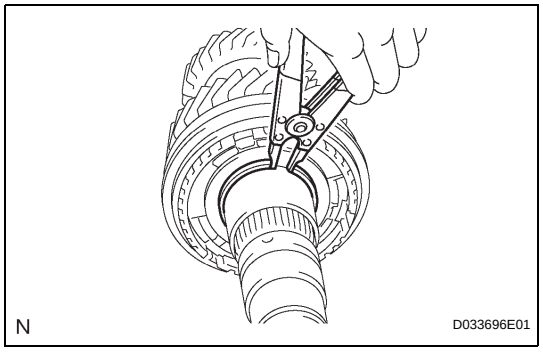

6. INSTALL CLUTCH HUB NO.1 SHAFT SNAP RING

(a) Select a snap ring that will allow minimum axial play.

Standard clearance:

0.1 mm (0.004 in.) or less

Snap ring thickness

Part No.	Thickness: mm (in.)	Mark
90520-45013	2.28 to 2.33 (0.0898 to 0.0917)	A
90520-45014	2.33 to 2.38 (0.0917 to 0.0937)	B
90520-45015	2.38 to 2.43 (0.0937 to 0.0957)	C
90520-45016	2.43 to 2.48 (0.0957 to 0.0976)	D
90520-45017	2.48 to 2.53 (0.0976 to 0.0996)	E
90520-45018	2.53 to 2.58 (0.0996 to 0.1016)	F
90520-45019	2.58 to 2.63 (0.1016 to 0.1035)	G

(b) Using a snap ring expander, install the snap ring onto the counter gear.

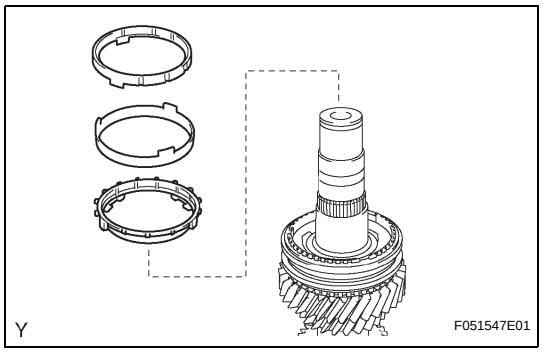

7. INSTALL NO. 1 SYNCHRONIZER RING SET (FOR 1ST GEAR)

(a) Coat the No. 1 synchronizer ring set with gear oil, then install it onto the counter gear.

MT

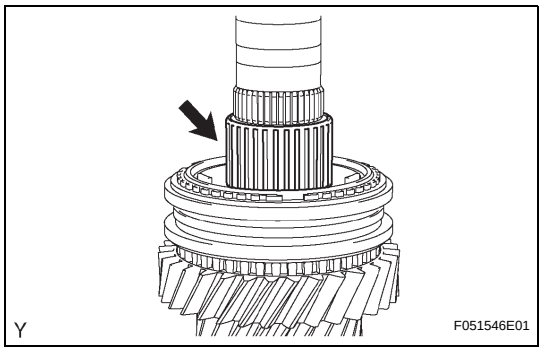

8. INSTALL 1ST GEAR NEEDLE ROLLER BEARING

(a) Coat the 1st gear needle roller bearing with gear oil, then install it onto the counter gear.

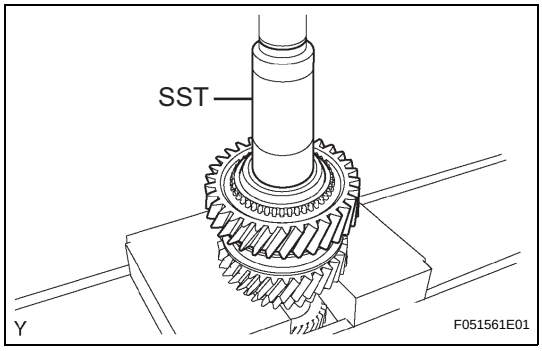

9. INSTALL COUNTERSHAFT GEAR 1ST SPEED

(a) Coat the countershaft gear 1st speed with gear oil, and install it onto the counter gear.

(b) Using SST and a press, install the reverse gear spline piece.

SST 09309-37010

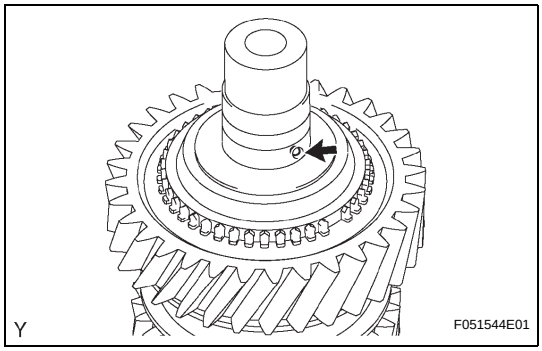

10. INSTALL BALL

(a) Install the ball into the counter gear.

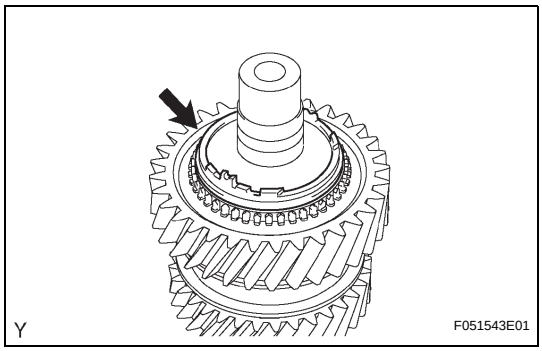

11. INSTALL NO. 4 SYNCHRONIZER RING

(a) Coat the No. 4 synchronizer ring with gear oil, and install it onto the counter gear.

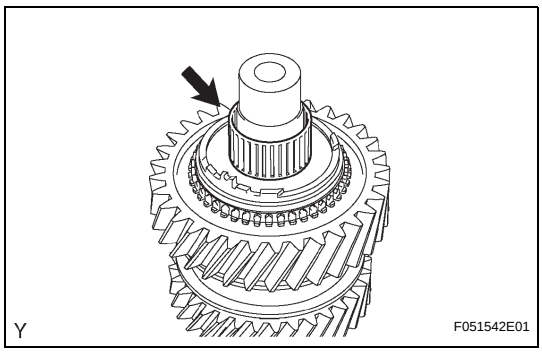

12. INSTALL REVERSE GEAR NEEDLE ROLLER BEARING

(a) Coat the reverse gear needle roller bearing with gear oil, and install it onto the counter gear.

MT

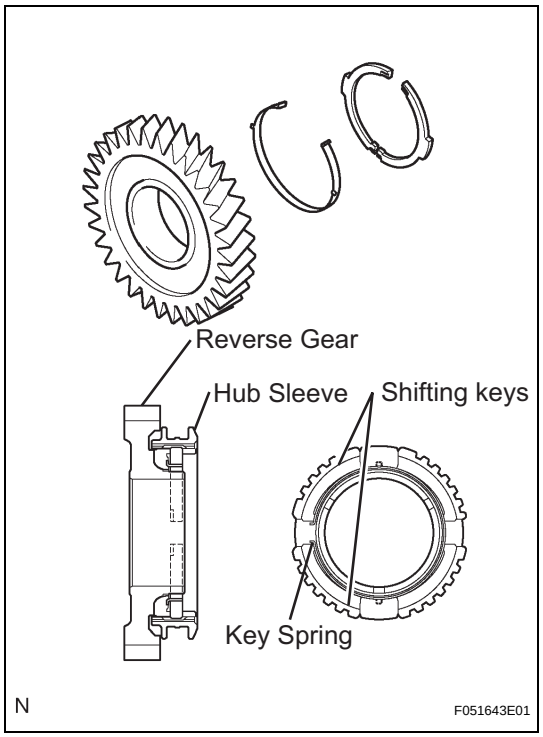

13. INSTALL COUNTERSHAFT REVERSE GEAR

(a) Install the key spring and 2 shifting keys onto the reverse gear.
HINT:
- Install the shifting key with its groove on the reverse gear side.
- Install the key spring with its claw on the reverse gear side.
- Refer to the illustration when installing the key spring.

(b) Install the hub sleeve onto the reverse gear.

(c) Coat the countershaft reverse gear with gear oil, then install it onto the counter gear.

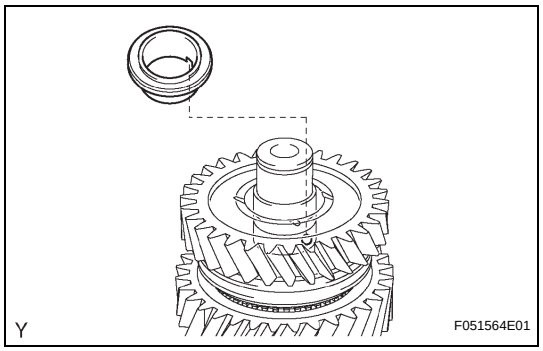

14. INSTALL REVERSE GEAR BEARING RACE INNER

(a) Align the groove of the reverse gear bearing race inner with the ball, and install them.

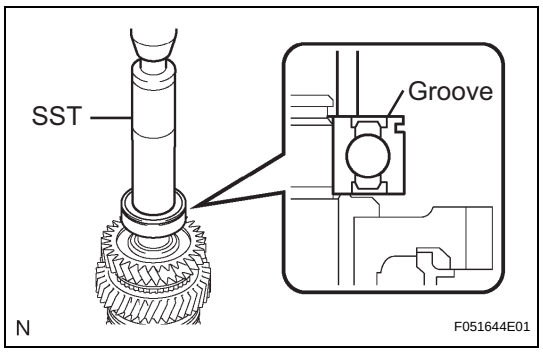

15. INSTALL COUNTER GEAR FRONT BEARING OR ROLLER

(a) Using SST and a press, install the counter gear front bearing or roller onto the counter gear.
SST 09608-06041
HINT:
Make sure that the groove of the bearing faces the correct direction as shown in the illustration.

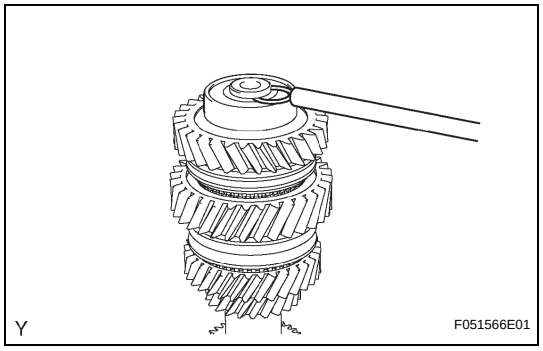

16. INSTALL NO. 1 COUNTER GEAR FRONT BEARING SNAP RING

(a) Select a snap ring that will allow minimum axial play.
Standard clearance:
0.1 mm (0.004 in.) or less
Snap ring thickness

Part No.	Thickness: mm (in.)	Mark
90520-31015	2.35 to 2.40 (0.0925 to 0.0945)	A

MT

Part No.	Thickness: mm (in.)	Mark
90520-31016	2.40 to 2.45 (0.0945 to 0.0965)	B
90520-31017	2.45 to 2.50 (0.0965 to 0.0984)	C
90520-31018	2.50 to 2.55 (0.0984 to 0.1004)	D
90520-31019	2.55 to 2.60 (0.1004 to 0.1024)	E
90520-31020	2.60 to 2.65 (0.1024 to 0.1043)	F
90520-31021	2.65 to 2.70 (0.1043 to 0.1063)	G
90520-31022	2.70 to 2.75 (0.1063 to 0.1083)	H
90520-31023	2.75 to 2.80 (0.1083 to 0.1102)	J
90520-31024	2.80 to 2.85 (0.1102 to 0.1122)	K
90520-31025	2.85 to 2.90 (0.1122 to 0.1142)	L
0520-31033	2.90 to 2.95 (0.1142 to 0.1161)	M

(b) Using a snap ring expander, install the snap ring onto the counter gear.

17. INSPECT REVERSE GEAR THRUST CLEARANCE

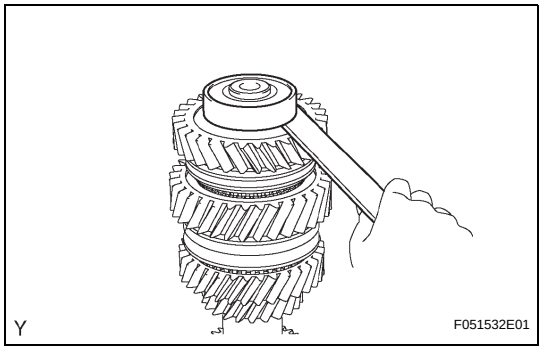

(a) Using a feeler gauge, measure the reverse gear thrust clearance.

Standard clearance:

0.125 to 0.375 mm (0.0049 to 0.0148 in.)

If the clearance is outside the specification, replace the defective gear, spline piece or bearing race.

18. INSPECT 1ST GEAR THRUST CLEARANCE

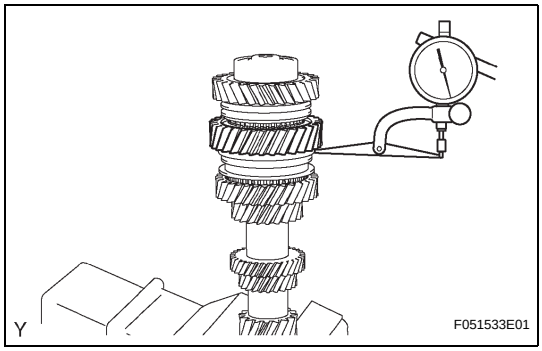

(a) Using a dial indicator, measure the 1st gear thrust clearance.

Standard clearance:

0.10 to 0.43 mm (0.0039 to 0.0169 in.)

If the clearance is outside the specification, replace the defective gear, clutch hub, spline piece or counter gear.

MT

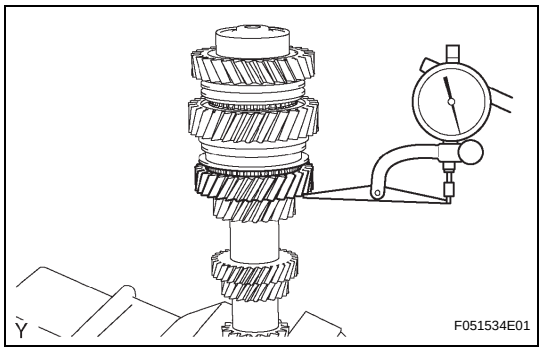

19. INSPECT 2ND GEAR THRUST CLEARANCE

(a) Using a dial indicator, measure the 2nd gear thrust clearance.

Standard clearance:

0.10 to 0.43 mm (0.0039 to 0.0169 in.)

If the clearance is outside the specification, replace the defective gear, clutch hub or counter gear.

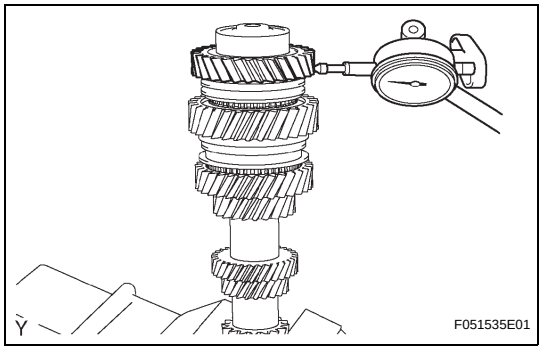

20. INSPECT REVERSE GEAR RADIAL CLEARANCE

(a) Using a dial indicator, measure the reverse gear radial clearance.

Standard clearance:

0.015 to 0.065 mm (0.0006 to 0.0026 in.)

If the clearance is outside the specification, replace the reverse gear needle roller bearing or shaft.

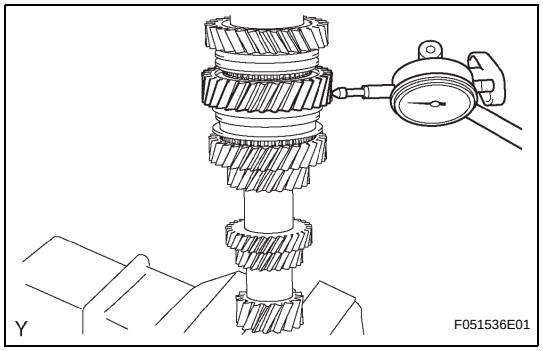

21. INSPECT 1ST GEAR RADIAL CLEARANCE

(a) Using a dial indicator, measure the 1st gear radial clearance.

Standard clearance:

0.015 to 0.067 mm (0.0006 to 0.0026 in.)

If the clearance is outside the specification, replace the 1st gear needle roller bearing or shaft.

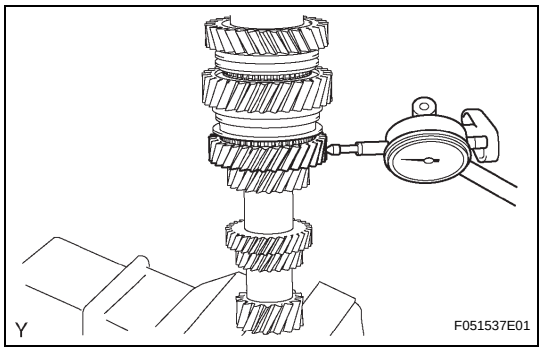

22. INSPECT 2ND GEAR RADIAL CLEARANCE

(a) Using a dial indicator, measure the 2nd gear radial clearance.

Standard clearance:

0.015 to 0.067 mm (0.0006 to 0.0026 in.)

If the clearance is outside the specification, replace the 2nd gear needle roller bearing or shaft.

FRONT SEAT ASSEMBLY

COMPONENTS

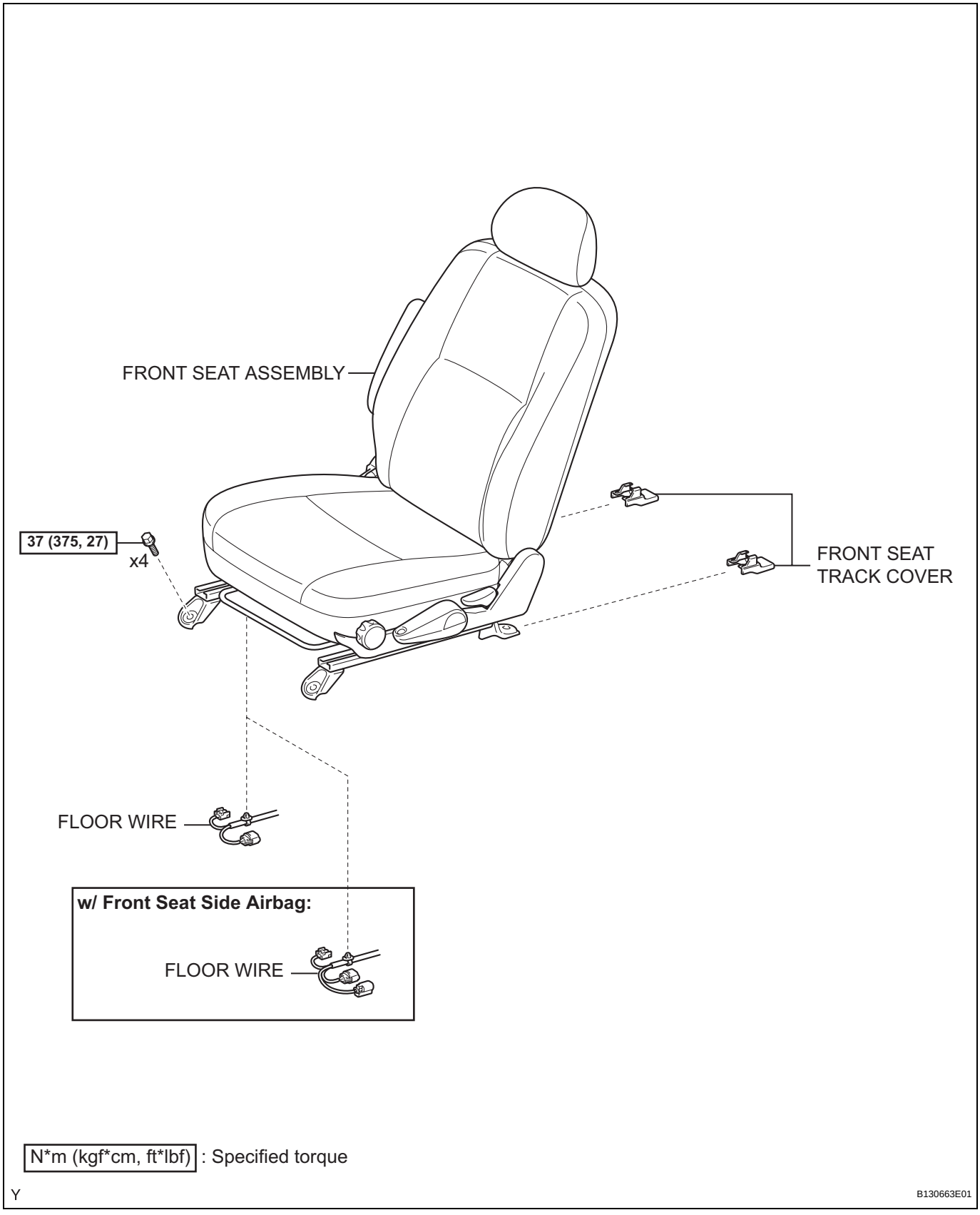

SE

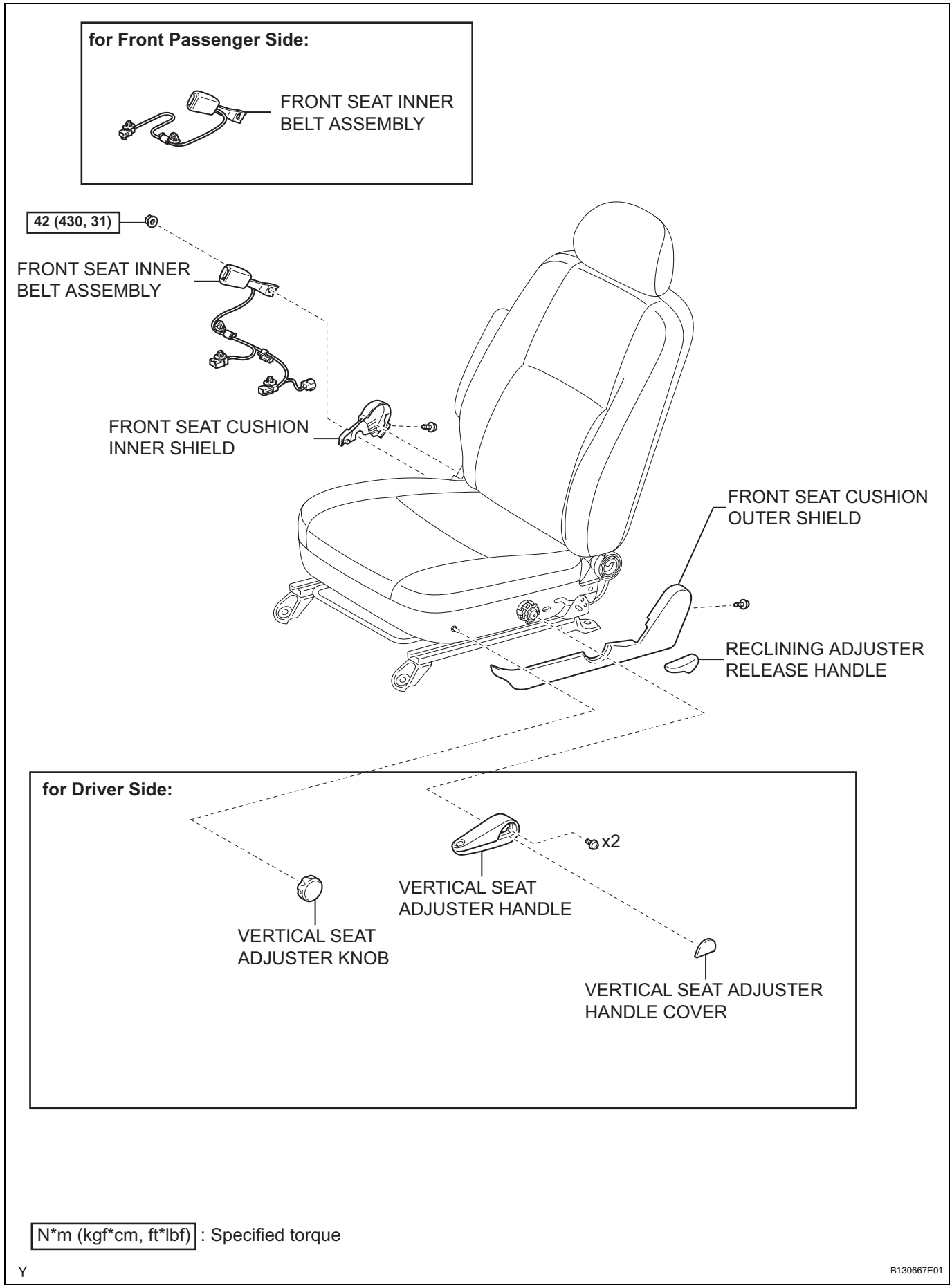

SE

N*m (kgf*cm, ft*lbf) : Specified torque

Y

B130667E01

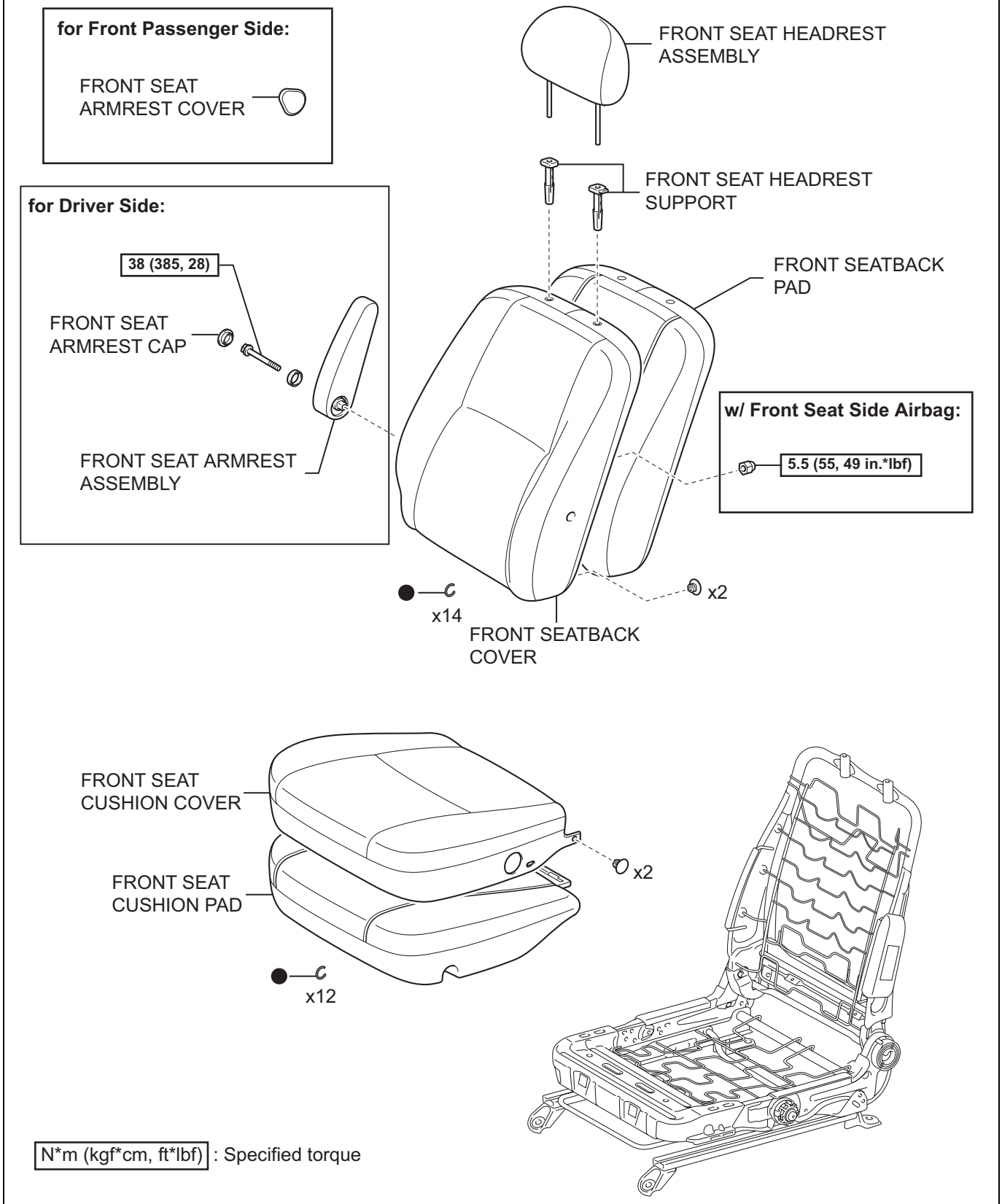

SE

Y

B130679E01

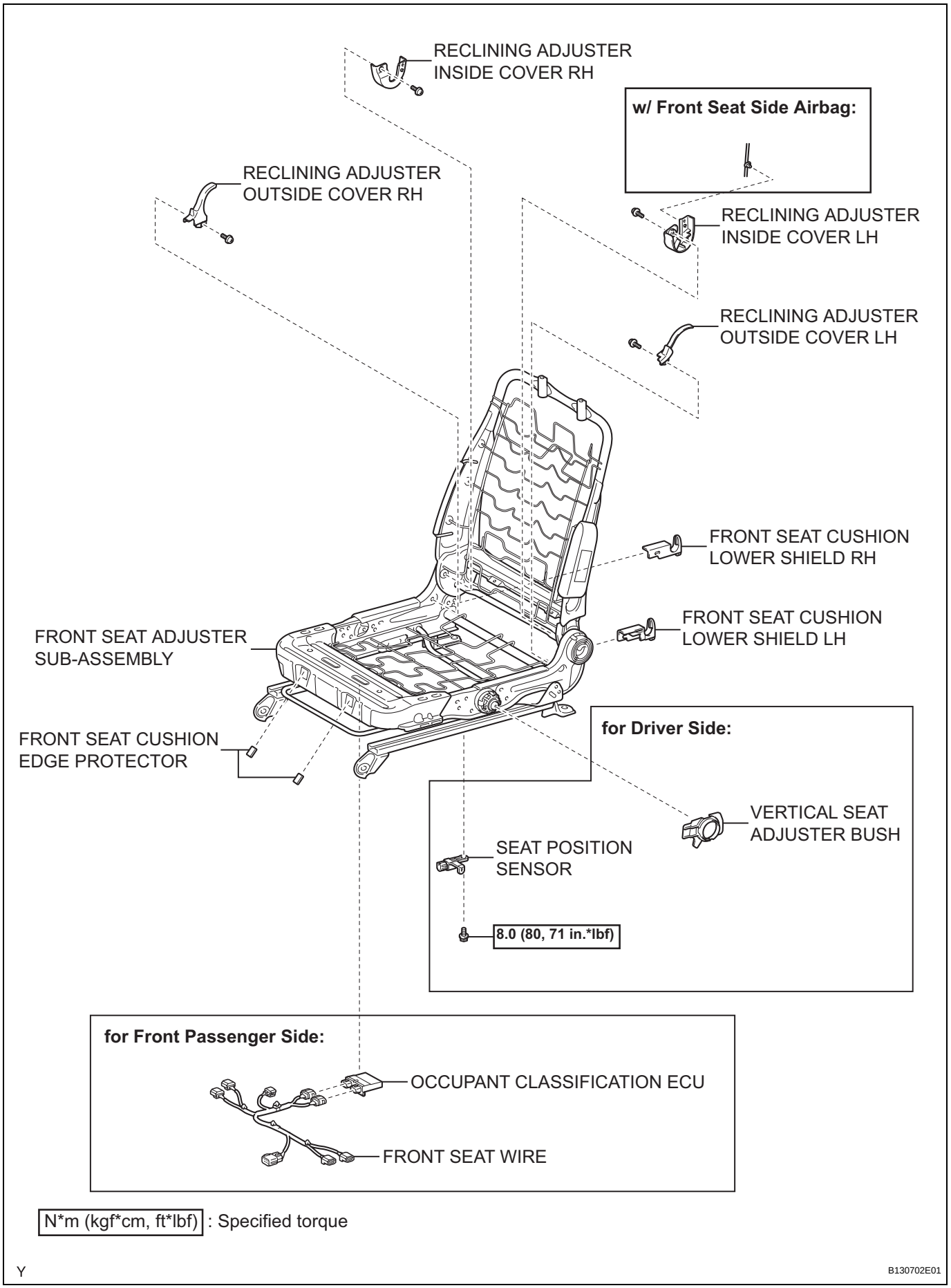

N*m (kgf*cm, ft*lbf) : Specified torque

Y

B130702E01

SE

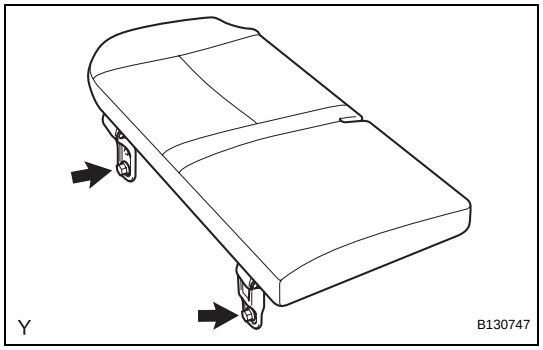

REMOVAL

1. REMOVE REAR SEAT CUSHION ASSEMBLY

(a) Remove the 2 bolts and the rear seat cushion.

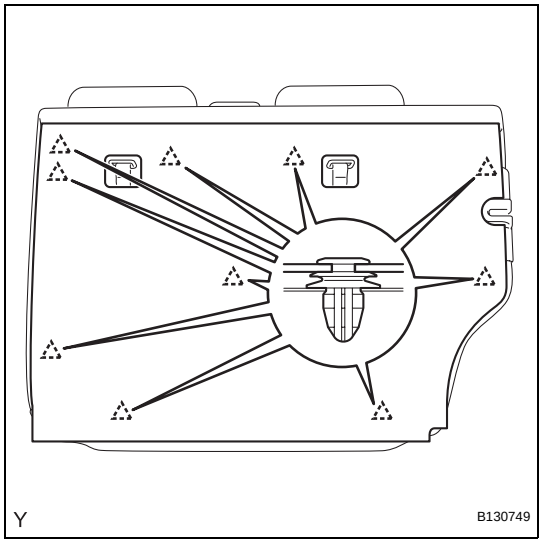

2. REMOVE REAR SEATBACK BOARD CARPET ASSEMBLY

(a) Pull the rear seatback lock release button and tilt the rear seatback forward.

(b) Disengage the 10 clips and remove the rear seatback board carpet.

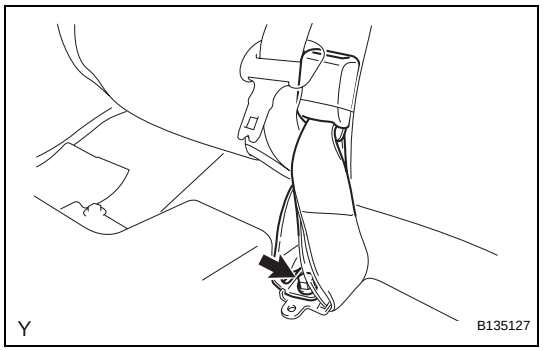

3. REMOVE REAR SEATBACK ASSEMBLY

(a) Pull up the rear seatback.

(b) Remove the bolt and the anchor plate of the rear center seat outer belt.

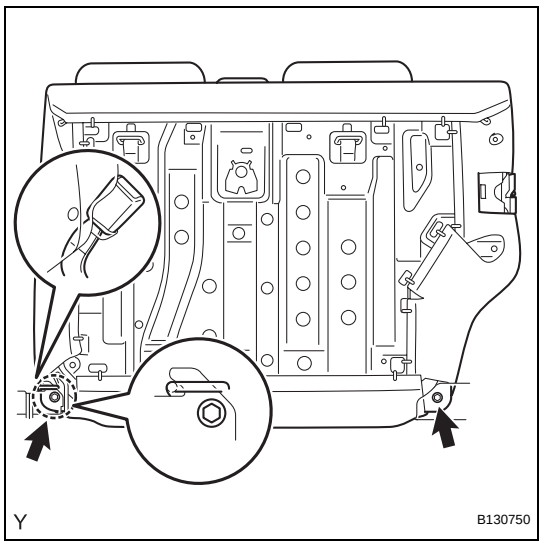

(c) Remove the rear seat inner belt from the rear seatback holder.

(d) Pull the rear seatback lock release button and tilt the rear seatback forward.

(e) Remove the 2 bolts.

(f) Disengage the hook and remove the rear seatback.

SE

DISASSEMBLY

CAUTION:
Wear protective gloves. Sharp surfaces on the rear seat cushion frame and the rear seatback frame could cause injuries to your hands.

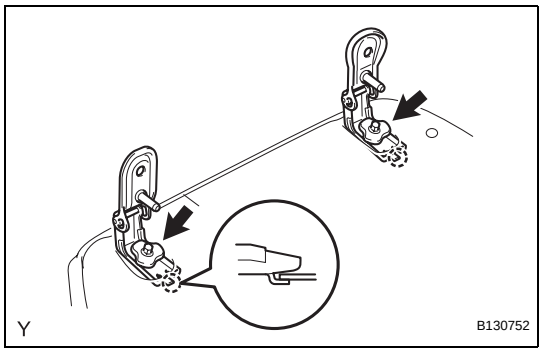

1. REMOVE REAR SEAT CUSHION HINGE SUB-ASSEMBLY

HINT:
Use the same procedure for both sides.

(a) Remove the bolt.
(b) Disengage the hook and remove the rear seat cushion hinge.

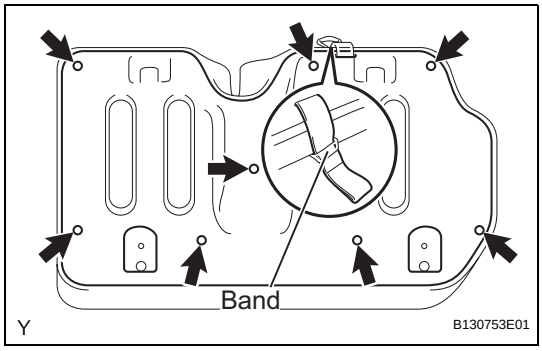

2. REMOVE REAR SEAT CUSHION UNDER COVER

(a) Remove the rear seat cushion stopper from the rear seat cushion cover band and the slit of the rear seat cushion under cover.
(b) Using a clip remover, remove the 7 clips and the rear seat cushion under cover.

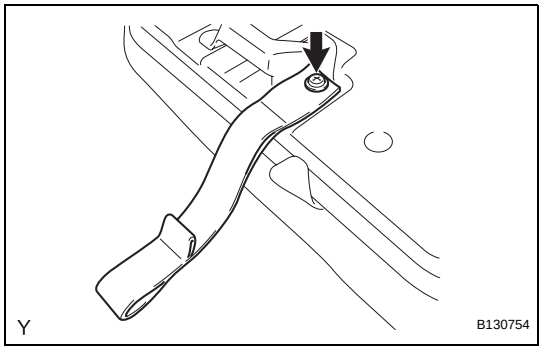

3. REMOVE REAR SEAT CUSHION STOPPER

(a) Remove the screw and the rear seat cushion stopper.

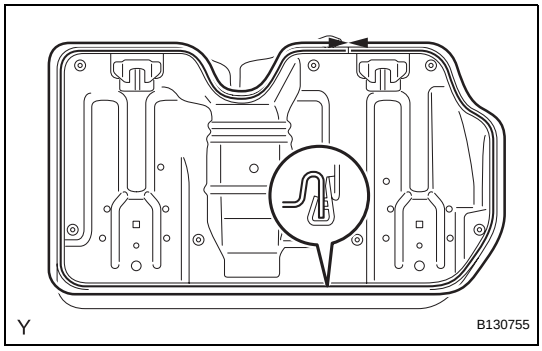

4. REMOVE REAR SEAT CUSHION FRAME SUB-ASSEMBLY

(a) Disengage the hook and remove the rear seat cushion frame.

SE

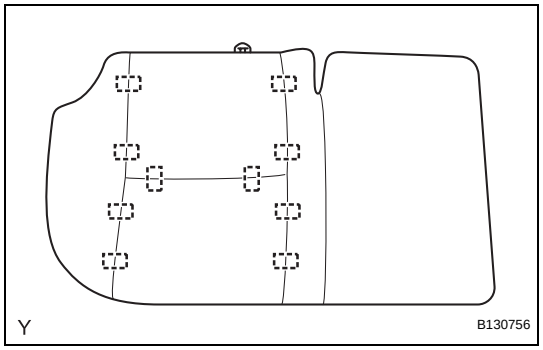

5. REMOVE REAR SEAT CUSHION COVER

(a) Remove the 10 hog rings and the rear seat cushion cover.

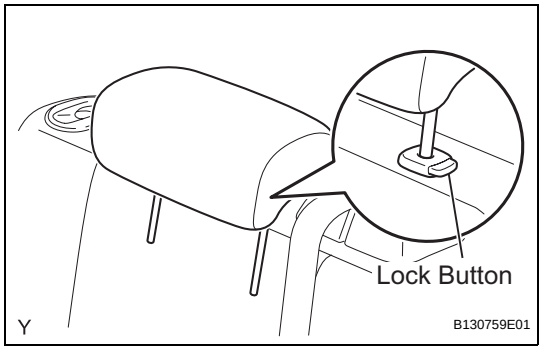

6. REMOVE REAR SEAT HEADREST ASSEMBLY

(a) Push the lock button of the rear seat headrest support and remove the rear seat headrest.

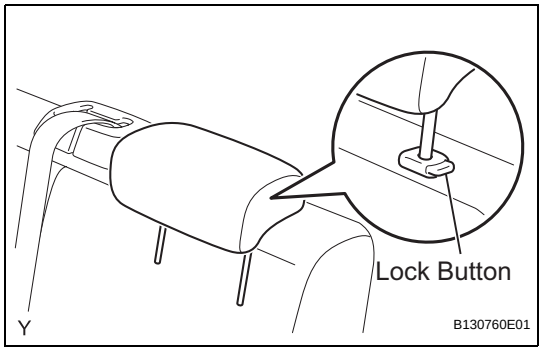

7. REMOVE REAR CENTER SEAT HEADREST ASSEMBLY

(a) Push the lock button of the rear seat headrest support and remove the rear seat headrest.

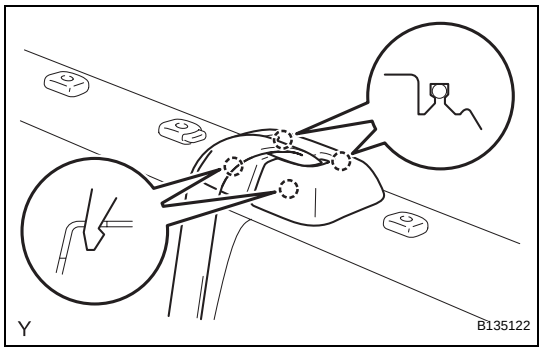

8. REMOVE REAR SEAT SHOULDER BELT COVER

(a) Disengage the 4 claws and remove the rear seat shoulder belt cover.

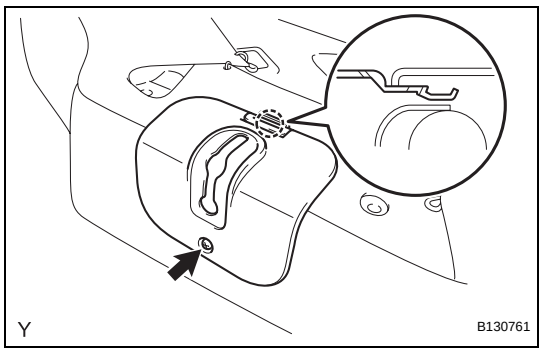

9. REMOVE REAR SEATBACK LOCK COVER

(a) Remove the screw.

(b) Disengage the claw and remove the rear seatback lock cover.

SE

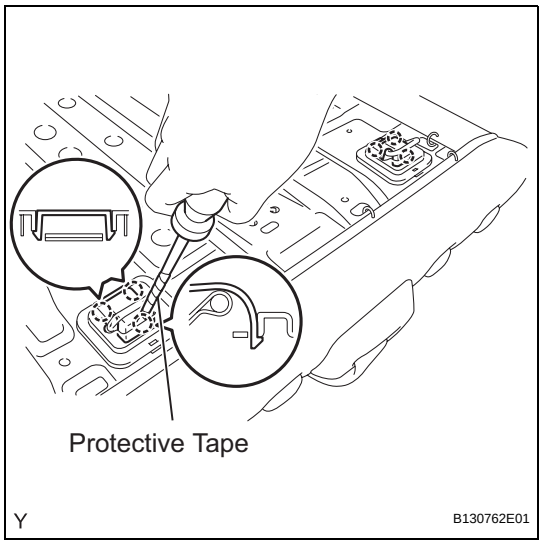

10. REMOVE TETHER ANCHOR COVER

HINT:

Use the same procedure for both sides.

(a) Using a screwdriver with its tip wrapped in protective tape, disengage the 2 claws and open the cover.

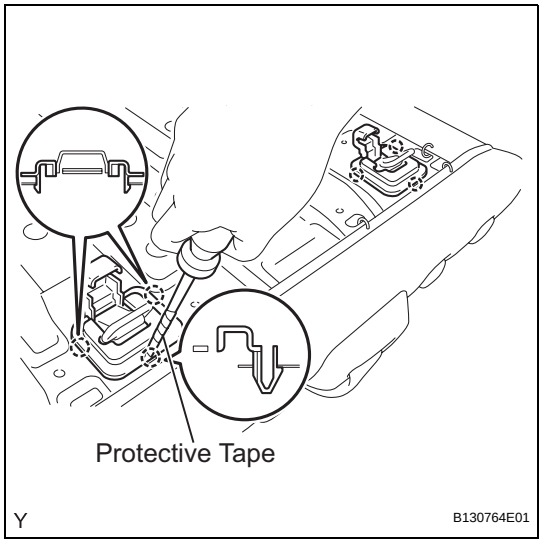

(b) Using a screwdriver with its tip wrapped in protective tape, disengage the 3 claws and remove the tether anchor cover.

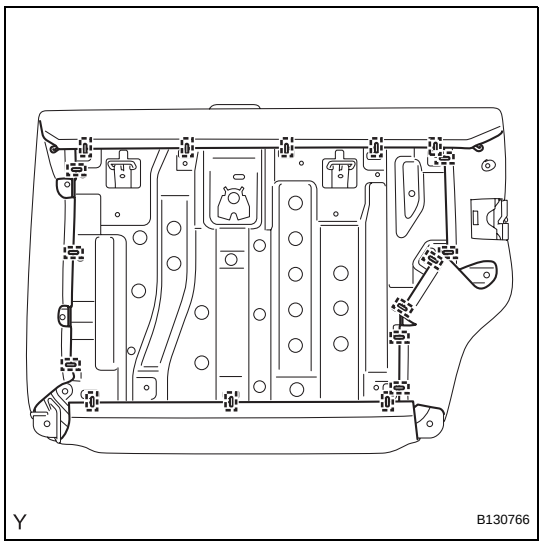

11. REMOVE REAR SEAT HEADREST SUPPORT

(a) Remove the 17 hog rings.

SE

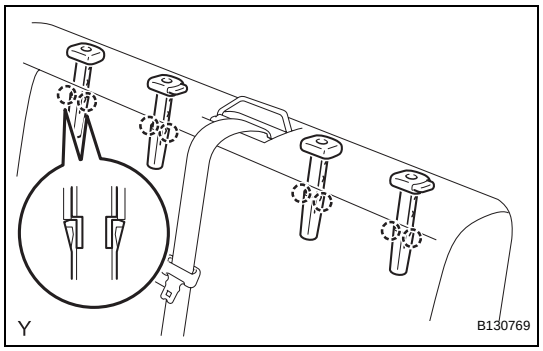

(b) Disengage the 2 claws and remove the rear seat headrest support.
HINT:
Use the same procedure to remove all the rear seat headrest supports.

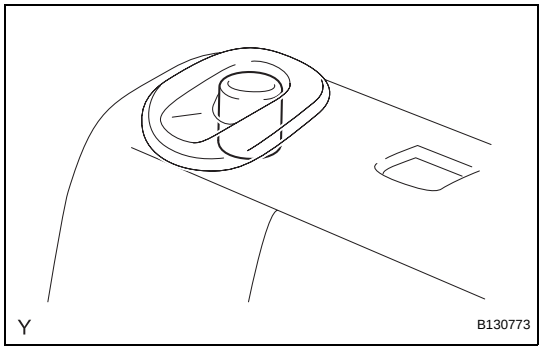

12. REMOVE REAR SEATBACK LOCK RELEASE BUTTON

(a) Remove the rear seatback lock release button.

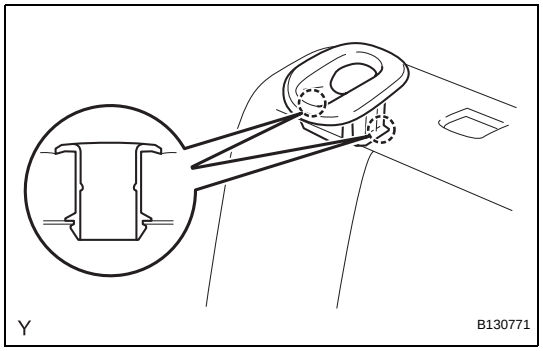

13. REMOVE REAR SEATBACK STOP BUTTON GROMMET

(a) Disengage the 2 claws and remove the rear seatback stop button grommet.

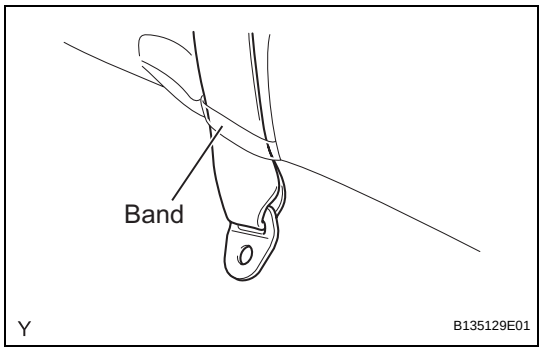

14. REMOVE REAR SEATBACK FRAME SUB-ASSEMBLY

(a) Remove the belt of the rear center seat outer belt from the rear seatback cover band.

SE

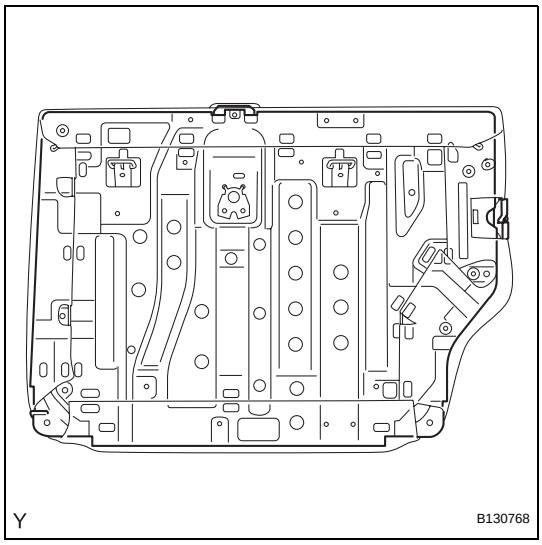

(b) Remove the rear seatback frame.

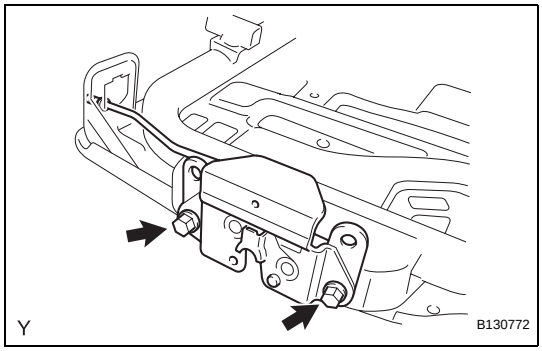

15. REMOVE REAR SEATBACK LOCK ASSEMBLY

(a) Remove the 2 bolts and the rear seatback lock.

16. REMOVE REAR CENTER SEAT OUTER BELT ASSEMBLY (See page SB-67)

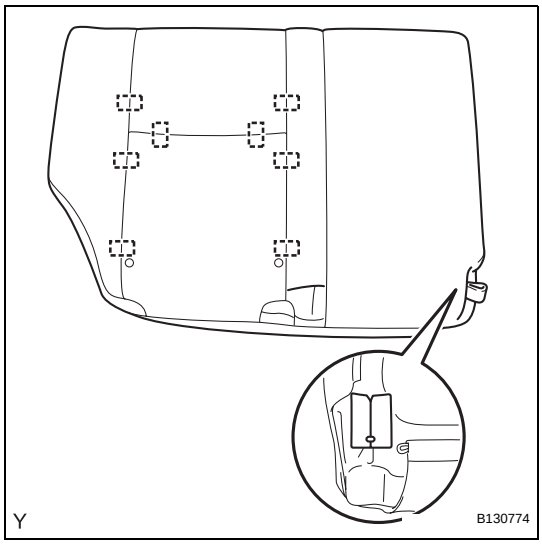

17. REMOVE REAR SEATBACK COVER

(a) Pass the hook of the rear seatback cover through the slit in the rear seatback pad.

(b) Remove the 8 hog rings and the rear seatback cover.

SE

REASSEMBLY

CAUTION:
Wear protective gloves. Sharp surfaces on the rear seat cushion frame and the rear seatback frame could cause injuries to your hands.

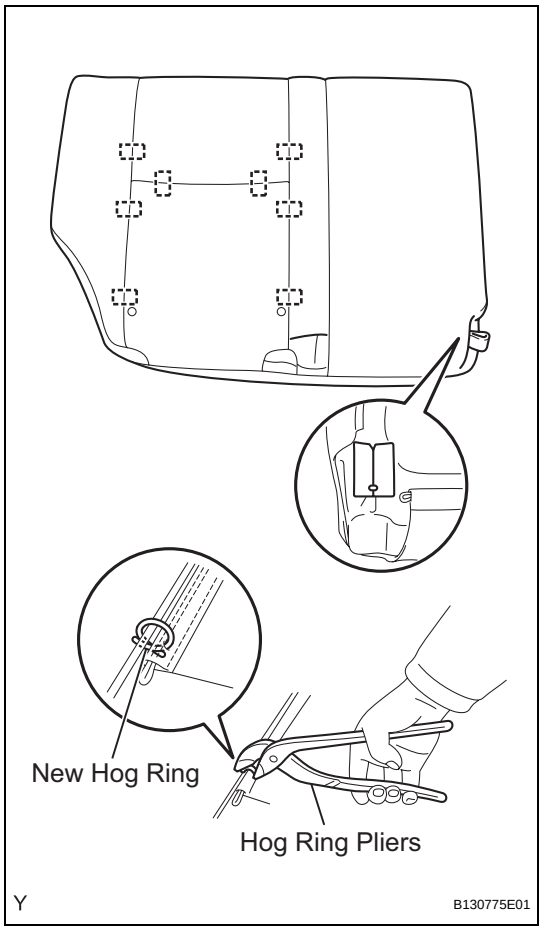

1. INSTALL REAR SEATBACK COVER

(a) Using hog ring pliers, install the rear seatback cover with 8 new hog rings.
NOTICE:
- **Do not soil or scratch the rear seatback cover.**
- **When installing the hog rings, minimize wrinkles as far as possible.**

(b) Pass the hook of the rear seatback cover through the slit in the rear seatback pad.

2. INSTALL REAR CENTER SEAT OUTER BELT ASSEMBLY (See page SB-67)

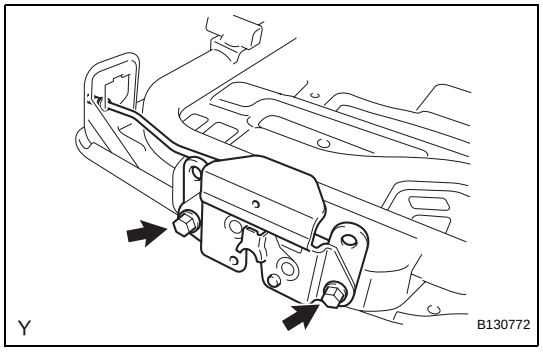

3. INSTALL REAR SEATBACK LOCK ASSEMBLY

(a) Install the rear seatback lock with the 2 bolts.
Torque: 18 N*m (185 kgf*cm, 13 ft.*lbf)

SE

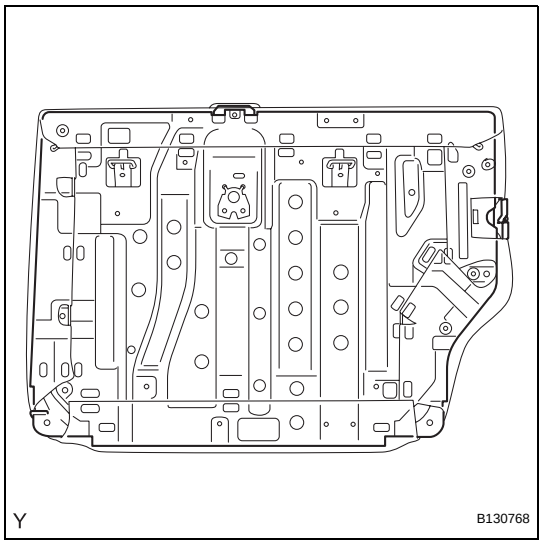

4. INSTALL REAR SEATBACK FRAME SUB-ASSEMBLY

(a) Install the rear seatback frame.

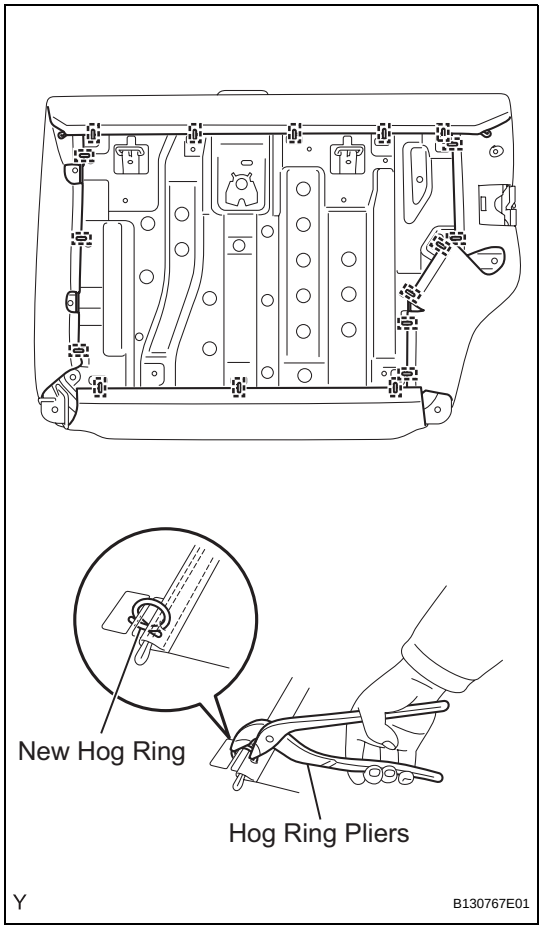

(b) Using hog ring pliers, install 17 new hog rings.

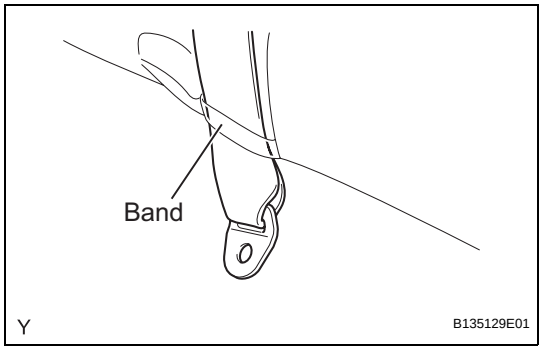

(c) Install the belt of the rear center seat outer belt into the rear seatback cover band.

SE

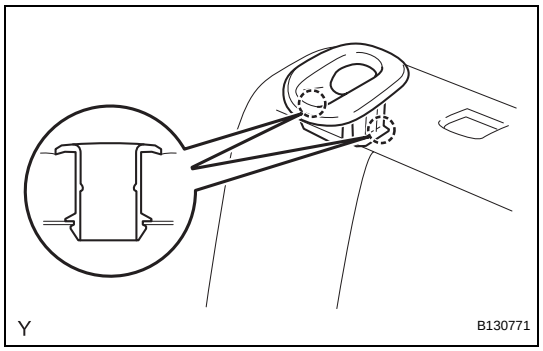

5. INSTALL REAR SEATBACK STOP BUTTON GROMMET

(a) Engage the 2 claws and install the rear seatback stop button grommet.

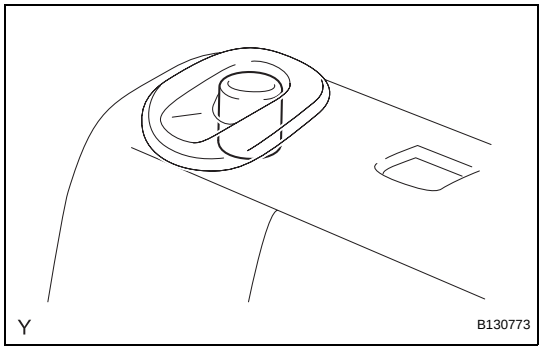

6. INSTALL REAR SEATBACK LOCK RELEASE BUTTON

(a) Install rear seatback lock release button.

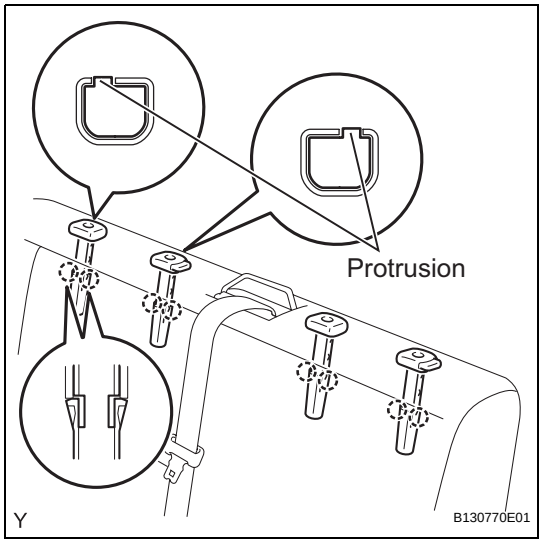

7. INSTALL REAR SEAT HEADREST SUPPORT

HINT:

Use the same procedure to install all the rear seat headrest supports.

(a) Align the protruding portion of the rear seat headrest support with the installation groove of the rear seatback frame.

(b) Engage the 2 claws and install the rear seat headrest support.

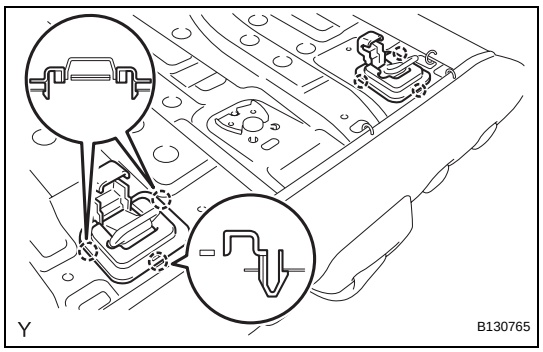

8. INSTALL TETHER ANCHOR COVER

HINT:

Use the same procedure for both sides.

(a) Engage the 3 claws and install the tether anchor cover.

SE

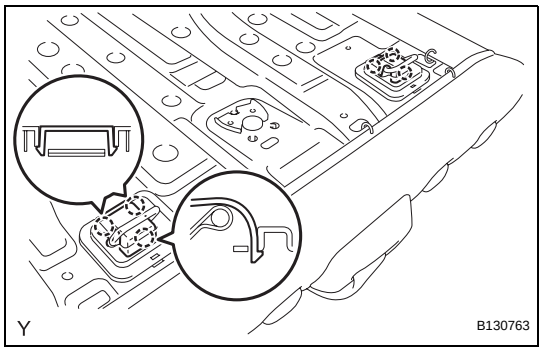

(b) Engage the 2 claws and close the cover.

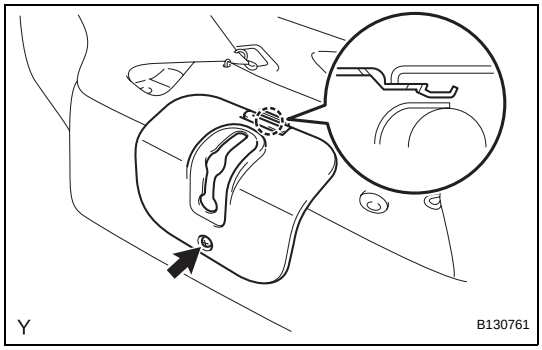

9. INSTALL REAR SEATBACK LOCK COVER

(a) Engage the claw and install the rear seatback lock cover.

(b) Tighten the screw.

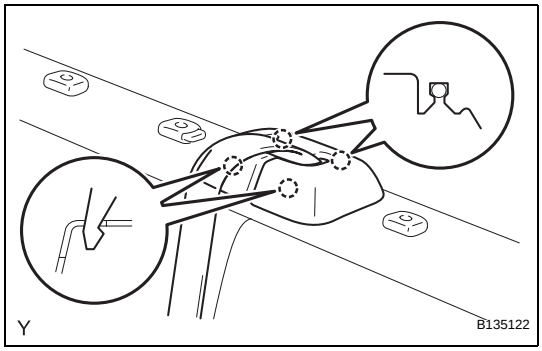

10. INSTALL REAR SEAT SHOULDER BELT COVER

(a) Engage the 4 claws and install the rear seat shoulder belt cover.

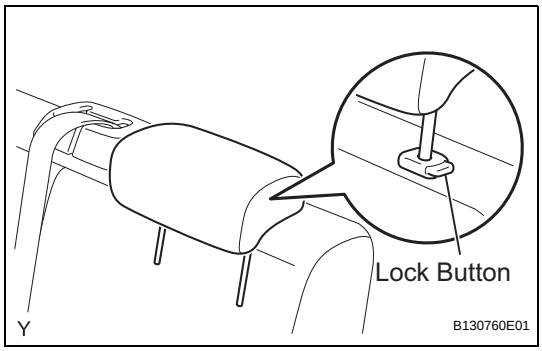

11. INSTALL REAR CENTER SEAT HEADREST ASSEMBLY

(a) Push the lock button of the rear seat headrest support and install the rear seat headrest.

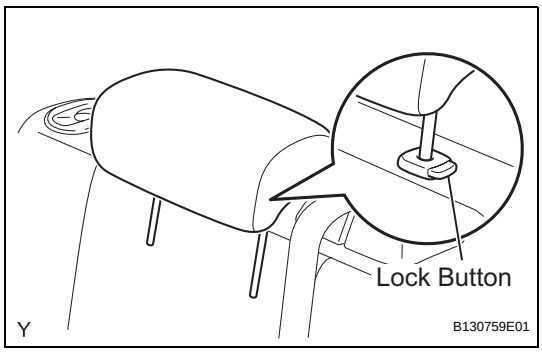

12. INSTALL REAR SEAT HEADREST ASSEMBLY

(a) Push the lock button of the rear seat headrest support and install the rear seat headrest.

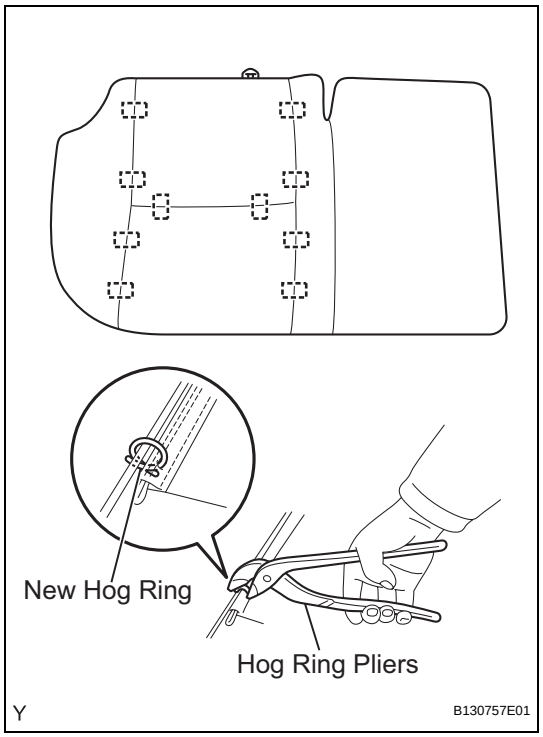

13. INSTALL REAR SEAT CUSHION COVER

(a) Using hog ring pliers, install the rear seat cushion cover with 10 new hog rings.

NOTICE:

- **Do not soil or scratch the rear seat cushion cover.**
- **When installing the hog rings, minimize wrinkles as far as possible.**

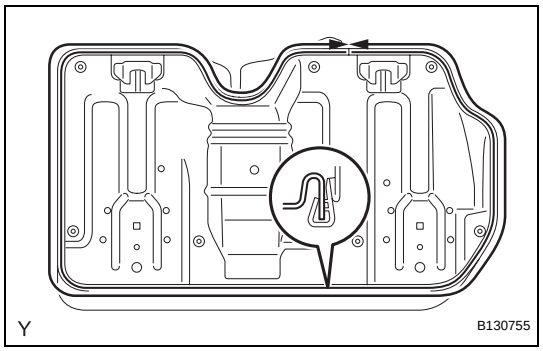

14. INSTALL REAR SEAT CUSHION FRAME SUB-ASSEMBLY

(a) Engage the hook and install the rear seat cushion frame.

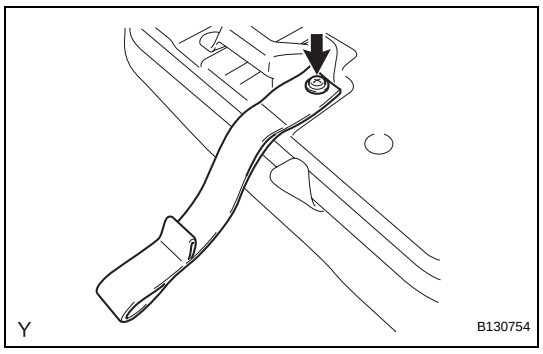

15. INSTALL REAR SEAT CUSHION STOPPER

(a) Install the rear seat cushion stopper with the screw.

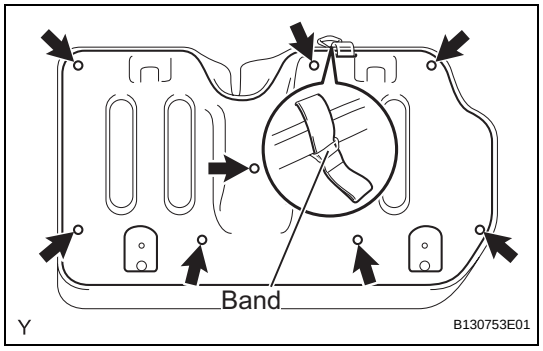

16. INSTALL REAR SEAT CUSHION UNDER COVER

(a) Insert the rear seat cushion stopper into the slit of the rear seat cushion under cover.

(b) Install the rear seat cushion under cover with the 7 clips.

(c) Install the rear seat cushion stopper into the rear seat cushion cover band.

SE

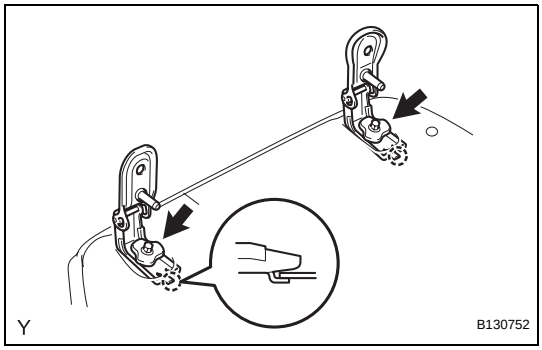

17. INSTALL REAR SEAT CUSHION HINGE SUB-ASSEMBLY

HINT:

Use the same procedure for both sides.

(a) Engage the hook and install the rear seat cushion hinge.

(b) Install the rear seat cushion hinge with the bolt.
Torque: 18 N*m (185 kgf*cm, 13 ft.*lbf)

INSTALLATION

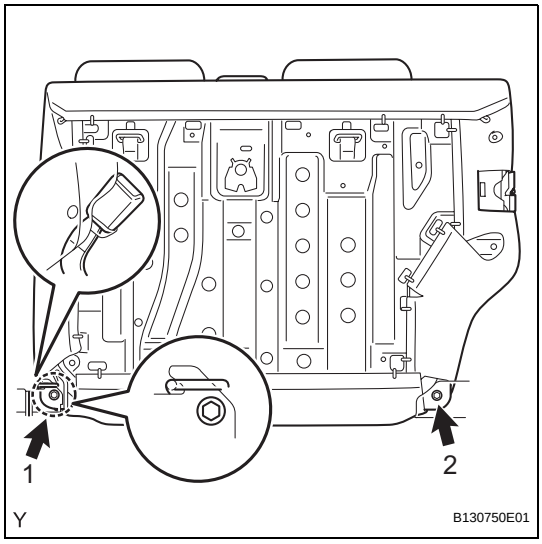

1. INSTALL REAR SEATBACK ASSEMBLY

(a) Engage the hook and temporarily install the rear seatback with the 2 bolts.

(b) Tighten the 2 bolts in the sequence shown in the illustration.
Torque: 37 N*m (375 kgf*cm, 27 ft.*lbf)

(c) Pull up the rear seatback.

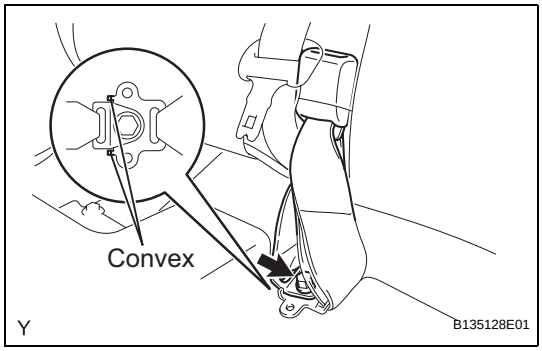

(d) Install the rear seat inner belt into the rear seatback holder.

(e) Install the anchor plate of the rear center seat outer belt with the bolt.
Torque: 42 N*m (430 kgf*cm, 31 ft.*lbf)
NOTICE:
Do not place the anchor plate over the convex area of the rear seat inner belt.

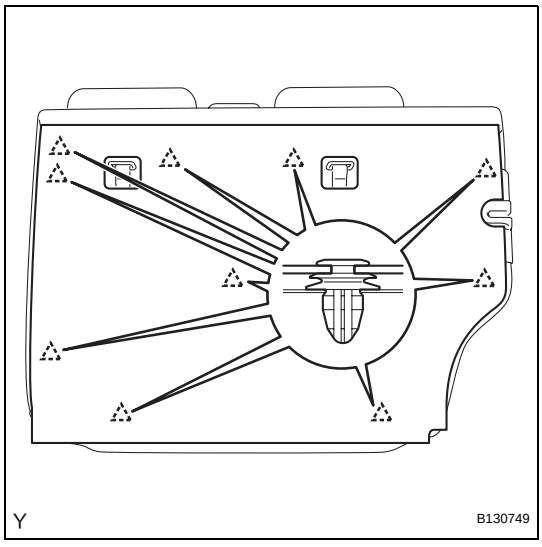

2. INSTALL REAR SEATBACK BOARD CARPET ASSEMBLY

(a) Pull the rear seatback lock release button and tilt the rear seatback forward.

(b) Engage the 10 clips and install the rear seatback board carpet.

(c) Pull up the rear seatback.

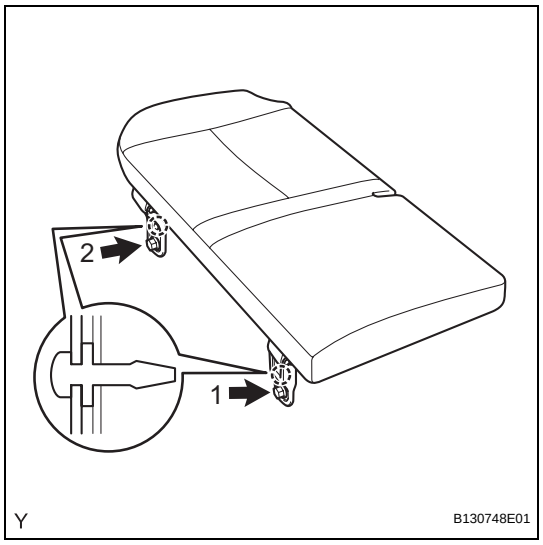

3. INSTALL REAR SEAT CUSHION ASSEMBLY

(a) Insert the locating pin into the body hole.

(b) Temporarily install the rear seat cushion with the 2 bolts.

(c) Tighten the 2 bolts in the sequence shown in the illustration.

Torque: 37 N*m (375 kgf*cm, 27 ft.*lbf)

REMOVAL

CAUTION:
Some of these service operations affect the SRS airbag system. Read the precautionary notices concerning the SRS airbag system before servicing (w/ Front Seat Side Airbag) (See page RS-1).

HINT:
The procedure described below is for the driver side. Use the same procedure for both the driver and front passenger sides, unless otherwise specified.

1. DISCONNECT CABLE FROM NEGATIVE BATTERY TERMINAL

CAUTION:
Wait for at least 90 seconds after disconnecting the cable to prevent the airbag from working (w/ Front Seat Side Airbag).

2. REMOVE FRONT SEAT TRACK COVER

HINT:
Use the same procedure for both sides.

(a) Insert a flat- head screwdriver (diameter: approximately above 5 mm (0.197 in.)) between the front seat track cover inside claw lower part and floor mat.

(b) Place an object with a height of approximately 5 to 8 mm (0.197 to 0.315 in.) below the screwdriver. Use the object as the screwdriver fulcrum and push down on the screwdriver to remove the front seat track cover inside claw, as shown in the illustration.

Specification:

Area	Measurement
a	1.6 mm (0.063 in.)
b	5.0 mm (0.197 in.)
c	5.0 to 8.0 mm (0.197 to 0.315 in.)

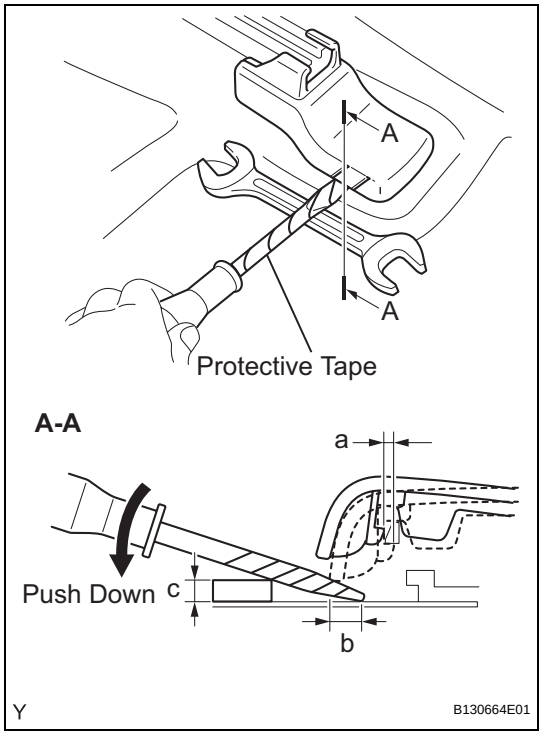

SE

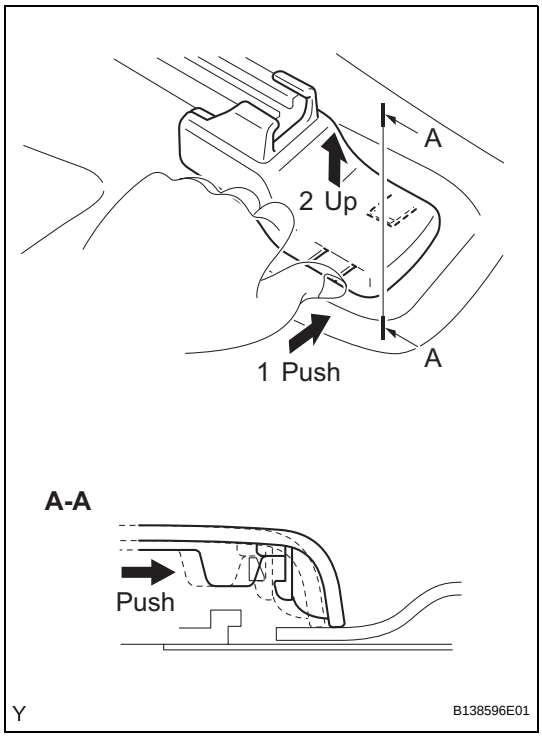

(c) Lift up on the area where the claw was removed. Then push in the direction of the claw on the opposite side to remove the outside claw.

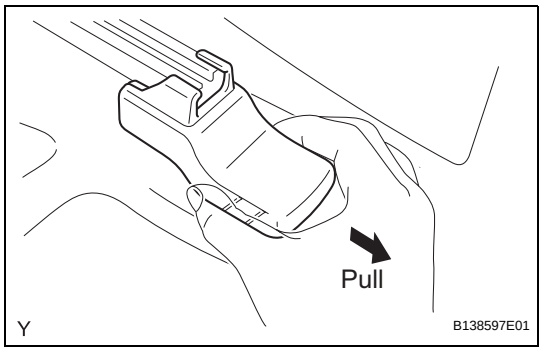

(d) After the 2 claws have been removed, carefully pull the front seat track cover rearward and remove the front seat track cover.

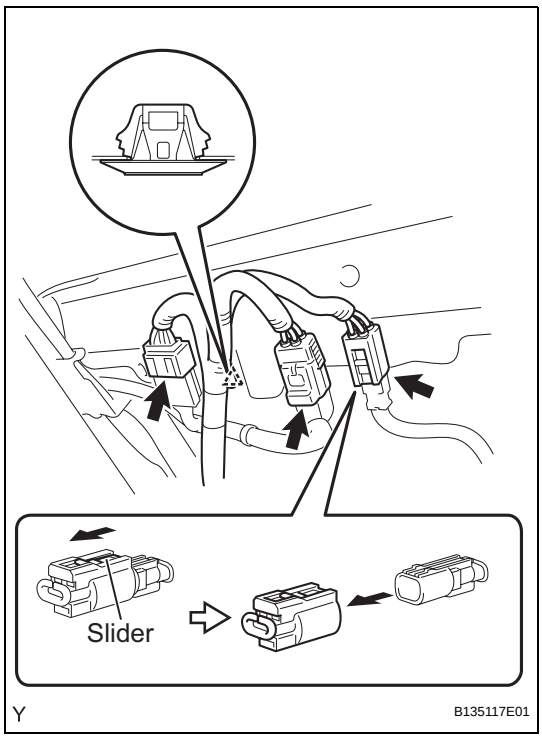

3. REMOVE FRONT SEAT ASSEMBLY

(a) for Driver Side:
  (1) Using a clip remover, remove the clamp.
  (2) Disconnect the 2 buckle switch connectors.
  (3) w/ Front Seat Side Airbag:
    1. Slide the slider and disconnect the airbag connector.

SE

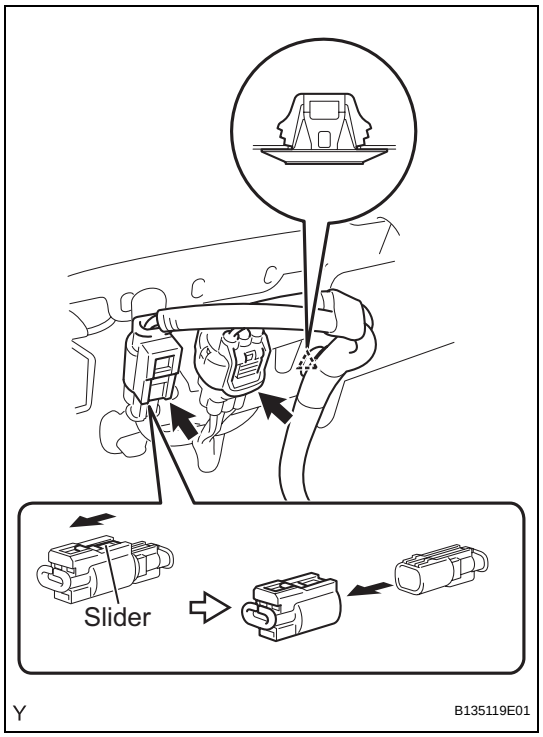

(b) for Front Passenger Side:
  (1) Using a clip remover, remove the clamp.
  (2) Disconnect the connector.
  (3) w/ Front Seat Side Airbag:
    1. Slide the slider and disconnect the airbag connector.

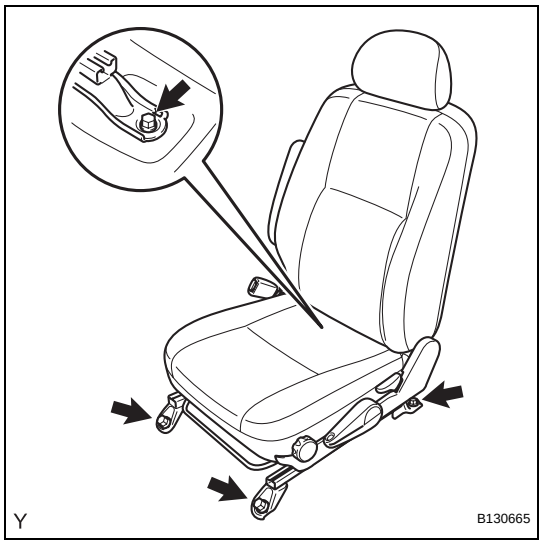

(c) Move the front seat to the most forward position.
(d) Remove the 2 bolts from the rear side.
(e) Move the front seat to the most rearward position.
(f) Remove the 2 bolts fromthe front side.
(g) Remove the front seat.

SE

DISASSEMBLY

CAUTION:
Wear protective gloves. Sharp surfaces on the front seat adjuster could cause injuries to your hands.
HINT:
The procedure described below is for the driver side. Use the same procedure for both the driver and front passenger sides, unless otherwise specified.

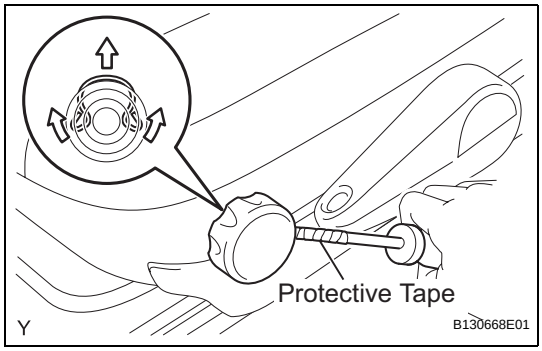

1. REMOVE VERTICAL SEAT ADJUSTER KNOB (for Driver Side)
(a) Using a screwdriver with its tip wrapped in protective tape, disengage the snap ring and remove the vertical seat adjuster knob.

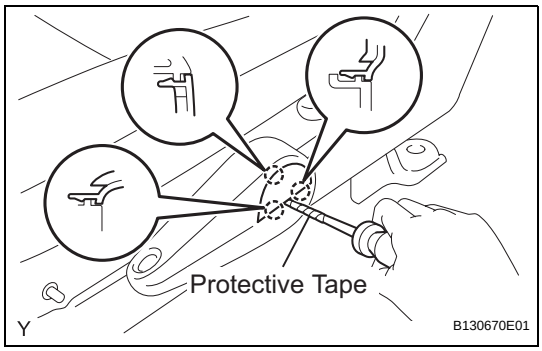

2. REMOVE VERTICAL SEAT ADJUSTER HANDLE COVER (for Driver Side)
(a) Using a screwdriver with its tip wrapped in protective tape, disengage the 3 claws and remove the vertical seat adjuster handle cover.

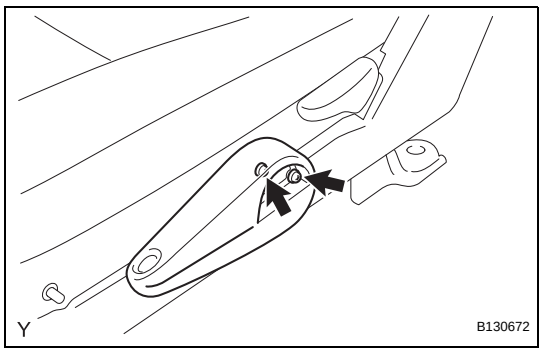

3. REMOVE VERTICAL SEAT ADJUSTER HANDLE (for Driver Side)
(a) Remove the 2 screws and the vertical seat adjuster handle.

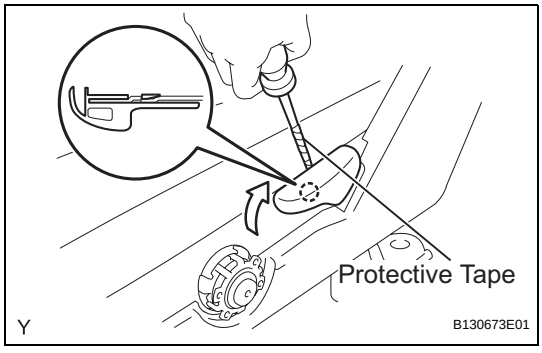

4. REMOVE RECLINING ADJUSTER RELEASE HANDLE
(a) Using a screwdriver with its tip wrapped in protective tape, disengage the claw and remove the reclining adjuster release handle.

SE

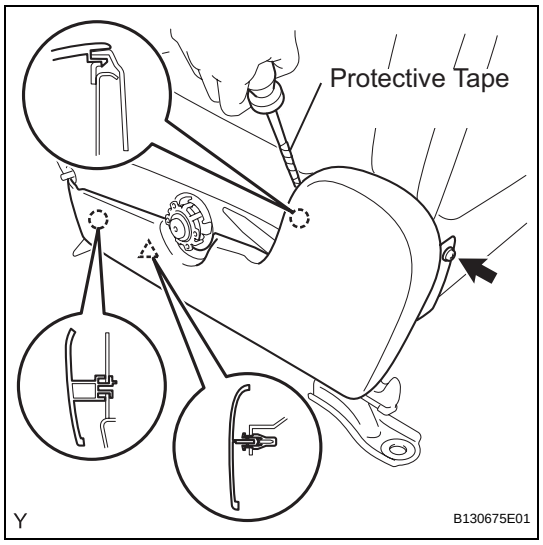

5. REMOVE FRONT SEAT CUSHION OUTER SHIELD

(a) Remove the screw.

(b) Using a screwdriver with its tip wrapped in protective tape, disengage the 2 claws and the clip and remove the front seat cushion outer shield.

6. REMOVE FRONT SEAT INNER BELT ASSEMBLY
(See page SB-31)

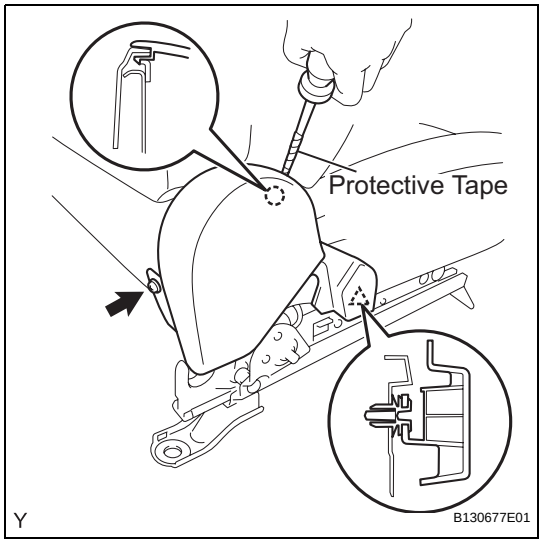

7. REMOVE FRONT SEAT CUSHION INNER SHIELD

(a) Remove the screw.

(b) Using a screwdriver with its tip wrapped in protective tape, disengage the claw and the clip and remove the front seat cushion inner shield.

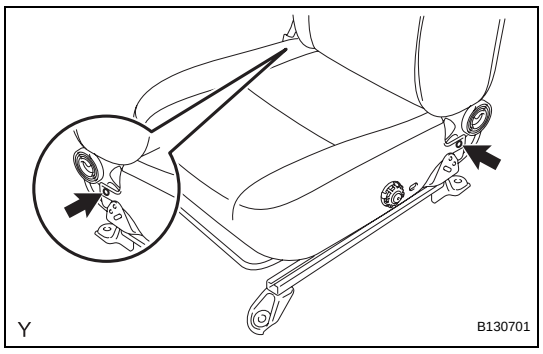

8. REMOVE FRONT SEAT CUSHION ASSEMBLY

(a) Using a clip remover, remove the 2 clips.

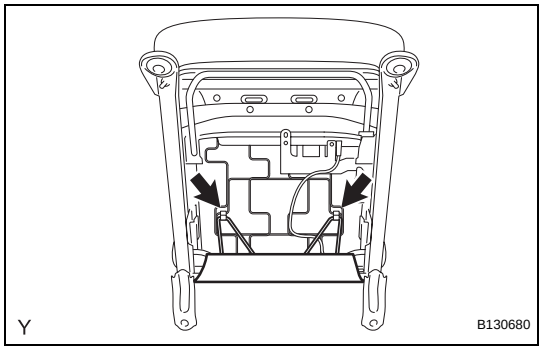

(b) Remove the 2 front seatback cover bands.

SE

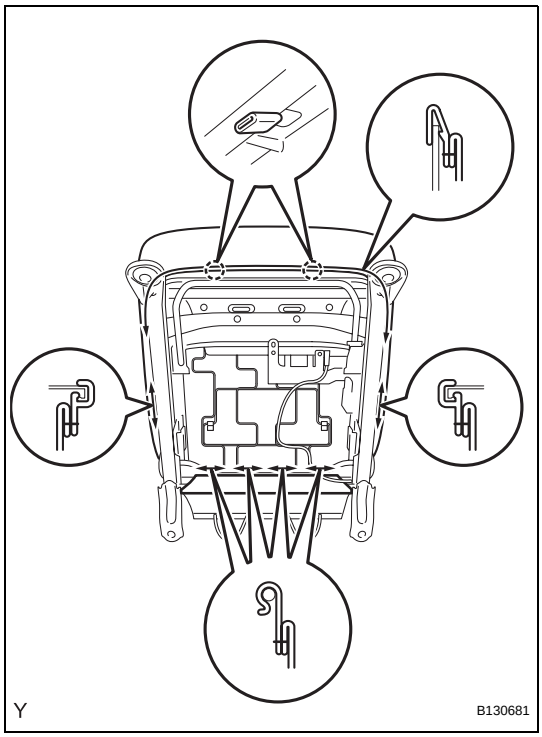

(c) Disengage the 2 claws and the 7 hooks and remove the front seat cushion.

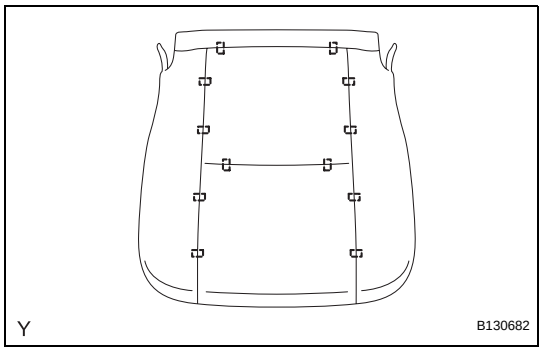

9. REMOVE FRONT SEAT CUSHION COVER

(a) Remove the 12 hog rings and the front seat cushion cover.

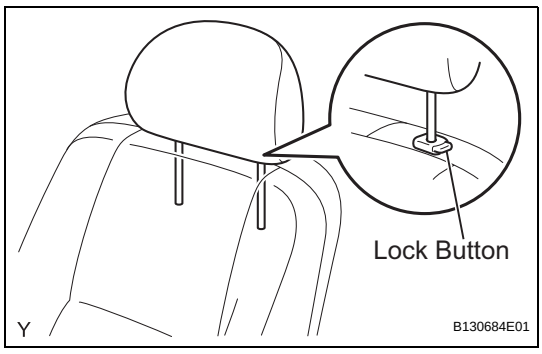

10. REMOVE FRONT SEAT HEADREST ASSEMBLY

(a) Push in the lock button of the front seat headrest support and remove the front seat headrest.

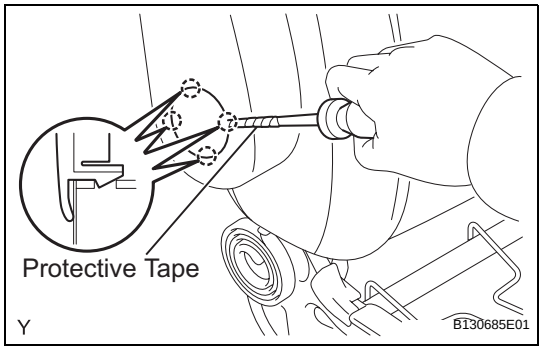

11. REMOVE FRONT SEAT ARMREST CAP (for Driver Side)

(a) Using a screwdriver with its tip wrapped in protective tape, disengage the 4 claws and remove the front seat armrest cap.

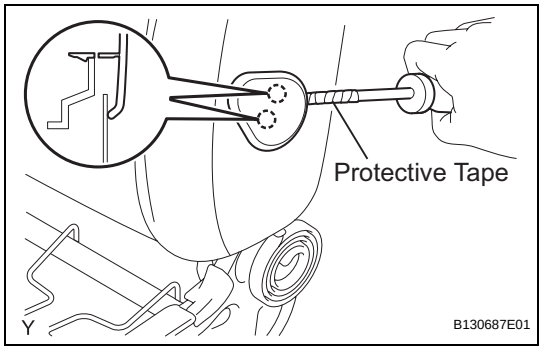

12. REMOVE FRONT SEAT ARMREST COVER (for Front Passenger Side)

(a) Using a screwdriver with its tip wrapped in protective tape, disengage the 2 claws and remove the front seat armrest cover.

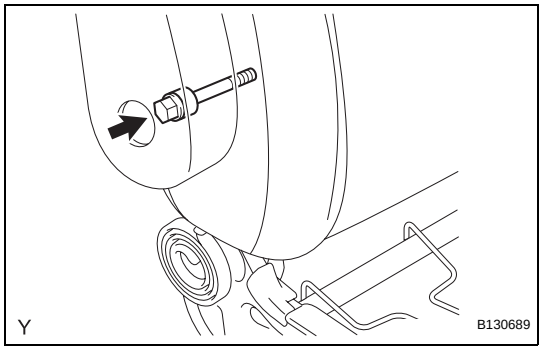

13. REMOVE FRONT SEAT ARMREST ASSEMBLY (for Driver Side)

(a) Remove the bolt, the bush and the front seat armrest.

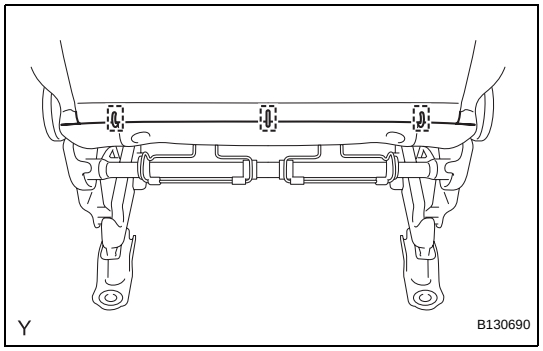

14. REMOVE FRONT SEAT HEADREST SUPPORT

(a) Remove the 3 hog rings.

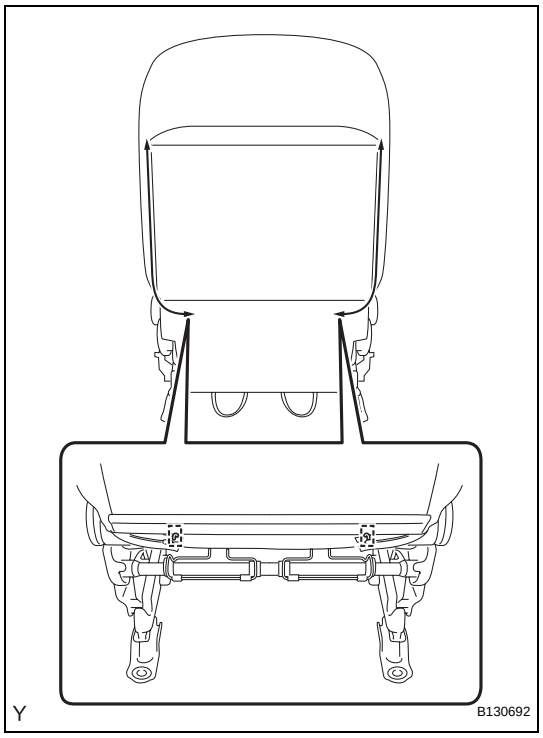

(b) Remove the 2 hog rings.

(c) Unfasten the 2 zippers.

SE

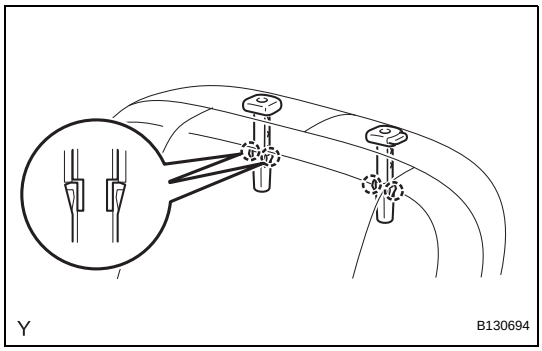

(d) Disengage the 2 claws and remove the front seat headrest support.
HINT:
Use the same procedure for both sides.

15. REMOVE FRONT SEATBACK ASSEMBLY

(a) Using a clip remover, remove the 2 clips.
(b) Remove the 4 hog rings.
(c) w/ Front Seat Side Airbag:
(1) Remove the nut.

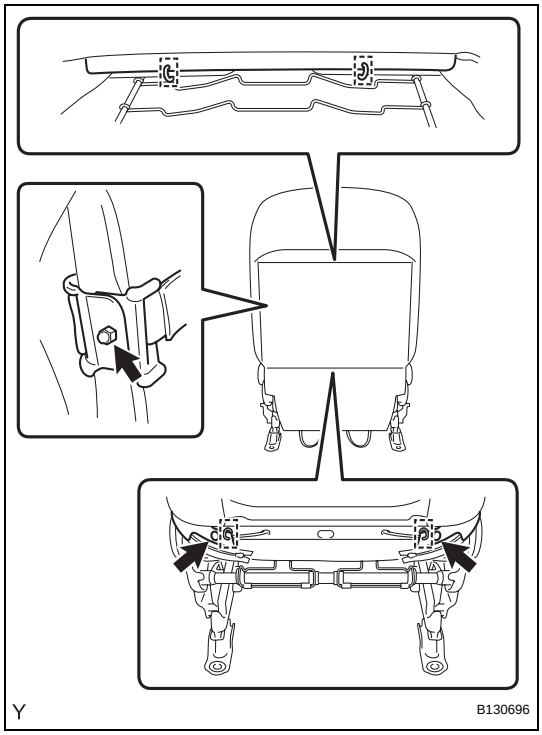

(d) Remove the front seatback.

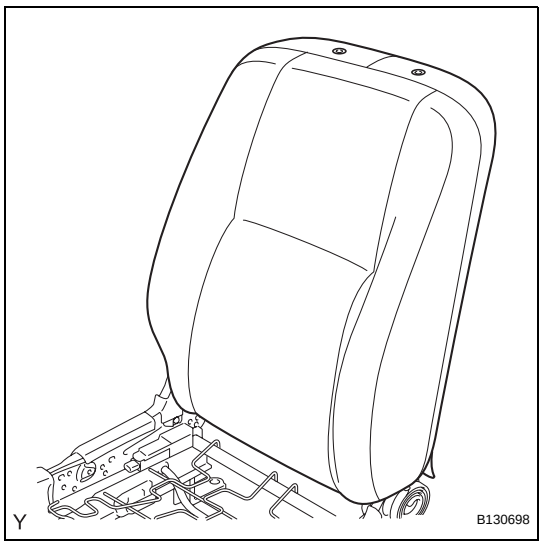

SE

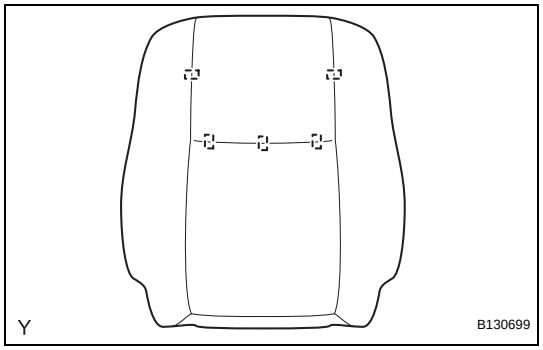

16. REMOVE FRONT SEATBACK COVER

(a) Remove the 5 hog rings and the front seatback cover.

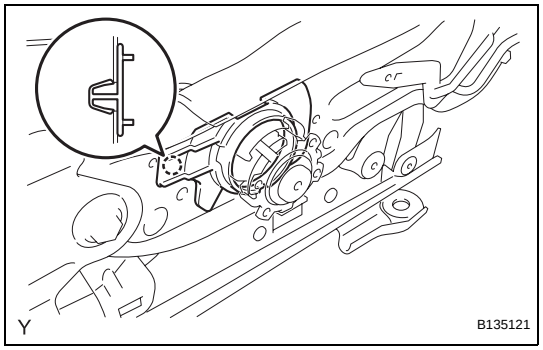

17. REMOVE VERTICAL SEAT ADJUSTER BUSH (for Driver Side)

(a) Disengage the claw and remove the vertical seat adjuster bush.

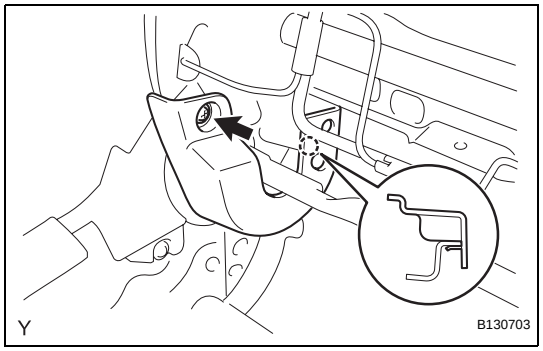

18. REMOVE RECLINING ADJUSTER INSIDE COVER RH

(a) Remove the screw.
(b) Disengage the claw and remove the reclining adjuster inside cover.

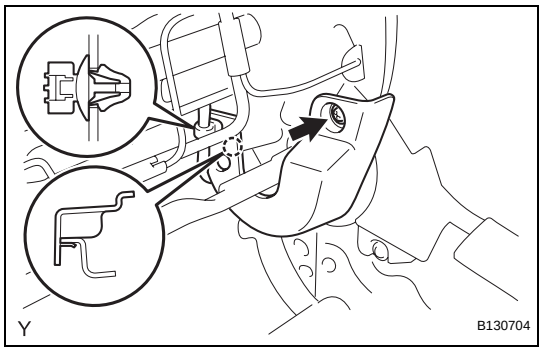

19. REMOVE RECLINING ADJUSTER INSIDE COVER LH

(a) Remove the screw.
(b) w/ Front Seat Side Airbag:
  (1) Using a clip remover, remove the clamp.
(c) Disengage the claw and remove the reclining adjuster inside cover.

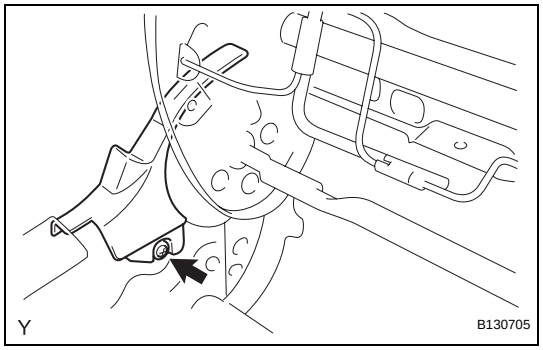

20. REMOVE RECLINING ADJUSTER OUTSIDE COVER RH

(a) Remove the screw and the reclining adjuster outside cover.

21. REMOVE RECLINING ADJUSTER OUTSIDE COVER LH

HINT:
Use the same procedure as for the RH side.

SE

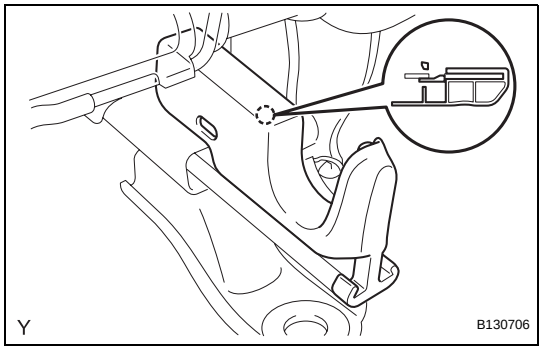

22. REMOVE FRONT SEAT CUSHION LOWER SHIELD RH

(a) Disengage the claw and remove the front seat cushion lower shield.

23. REMOVE FRONT SEAT CUSHION LOWER SHIELD LH

HINT:
Use the same procedure as for the RH side.

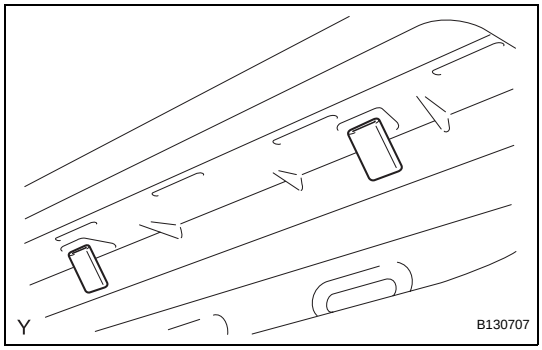

24. REMOVE FRONT SEAT CUSHION EDGE PROTECTOR

(a) Remove the 2 front seat cushion edge protectors.

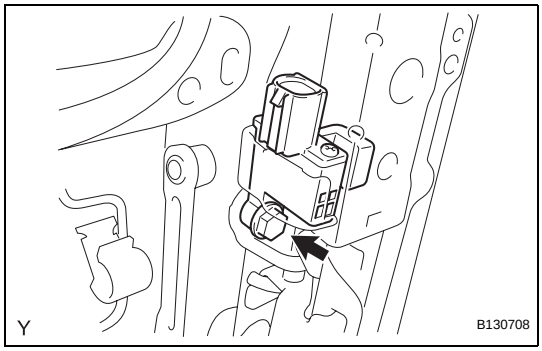

25. REMOVE SEAT POSITION SENSOR (for Driver Side)

(a) Remove the bolt and the seat position sensor.

26. REMOVE OCCUPANT CLASSIFICATION ECU (for Front Passenger Side)

(a) Disconnect the 2 connectors.

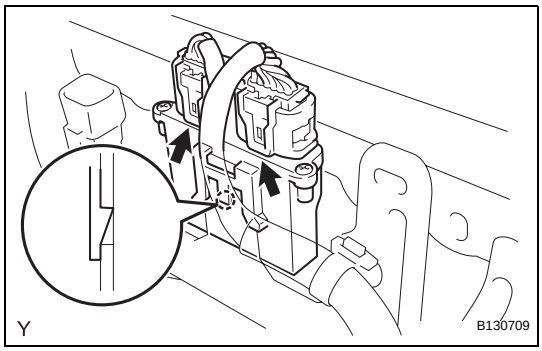

(b) Using a screwdriver, disengage the claw and remove the occupant classification ECU.

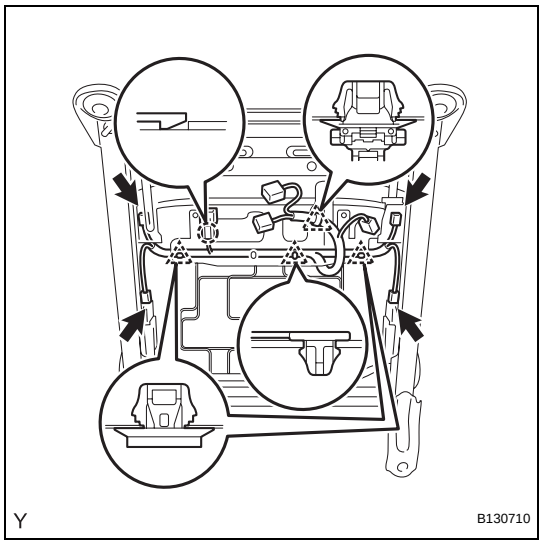

27. REMOVE FRONT SEAT WIRE (for Front Passenger Side)

(a) Disconnect the 4 connectors.
(b) Disengage the claw and remove the connector.
(c) Using a clip remover, remove the 4 clamps and the front seat wire.

REASSEMBLY

CAUTION:
Wear protective gloves. Sharp surfaces on the front seat adjuster could cause injuries to your hands.

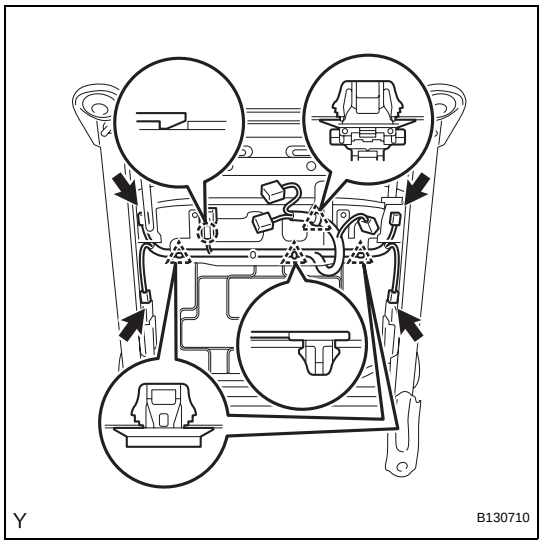

1. INSTALL FRONT SEAT WIRE (for Front Passenger Side)
(a) Install the seat wire with the 4 clamps.
(b) Engage the claw and install the connector.
(c) Connect the 4 connectors.

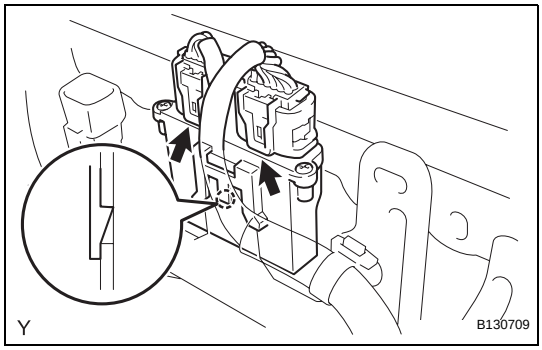

2. INSTALL OCCUPANT CLASSIFICATION ECU (for Front Passenger Side)
(a) Engage the claw and install the occupant classification ECU.
(b) Connect the 2 connectors.

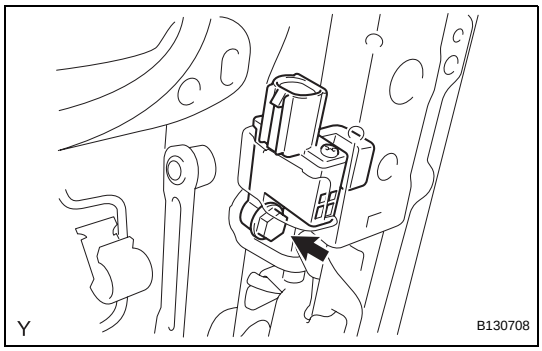

3. INSTALL SEAT POSITION SENSOR (for Driver Side)
(a) Install the seat position sensor with the bolt.
Torque: 8.0 N*m (80 kgf*cm, 71 in.*lbf)

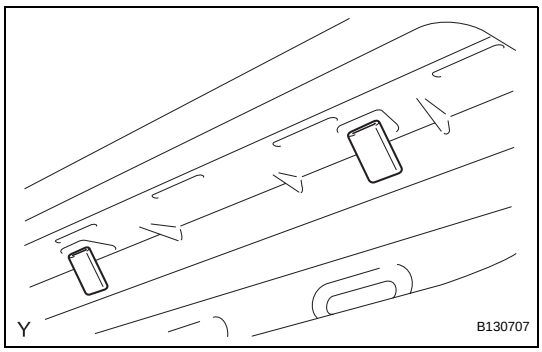

4. INSTALL FRONT SEAT CUSHION EDGE PROTECTOR
(a) Install the 2 front seat cushion edge protectors.

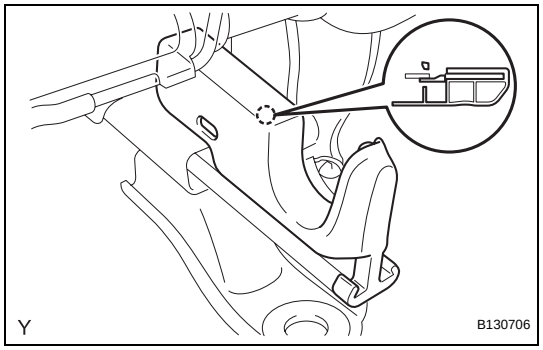

5. INSTALL FRONT SEAT CUSHION LOWER SHIELD RH

(a) Engage the claw and install the front seat cushion lower shield.

6. INSTALL FRONT SEAT CUSHION LOWER SHIELD LH

HINT:

Use the same procedure as for the RH side.

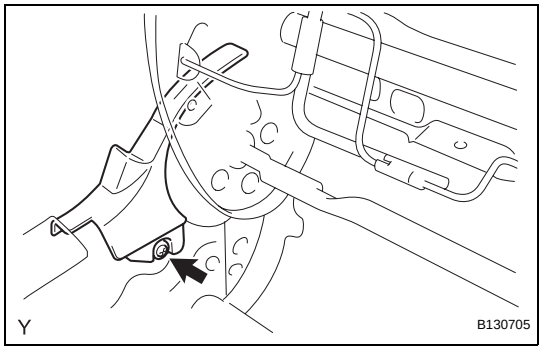

7. INSTALL RECLINING ADJUSTER OUTSIDE COVER RH

(a) Install the reclining adjuster outside cover with the screw.

8. INSTALL RECLINING ADJUSTER OUTSIDE COVER LH

HINT:

Use the same procedure as for the RH side.

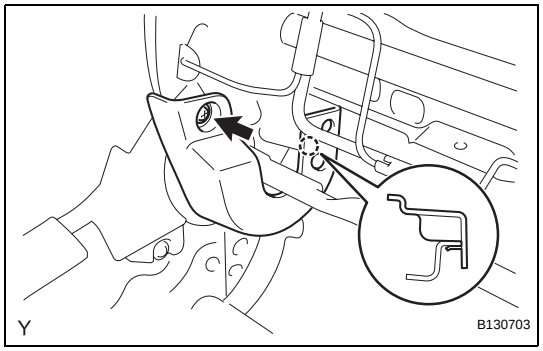

9. INSTALL RECLINING ADJUSTER INSIDE COVER RH

(a) Engage the claw and install the reclining adjuster inside cover.

(b) Tighten the screw.

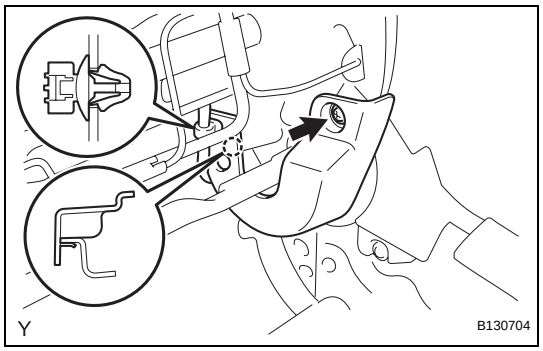

10. INSTALL RECLINING ADJUSTER INSIDE COVER LH

(a) Engage the claw and install the reclining adjuster inside cover.

(b) w/ Front Seat Side Airbag:

(1) Install the clamp.

(c) Tighten the screw.

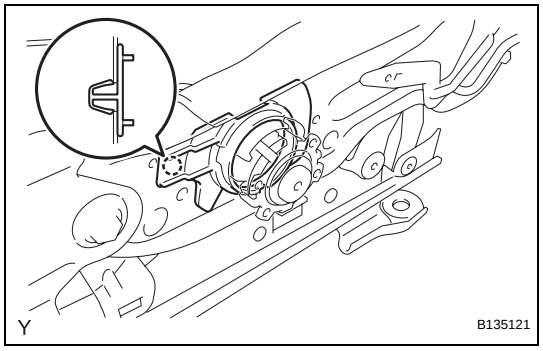

11. INSTALL VERTICAL SEAT ADJUSTER BUSH (for Driver Side)

(a) Engage the claw and install the vertical seat adjuster bush.

SE

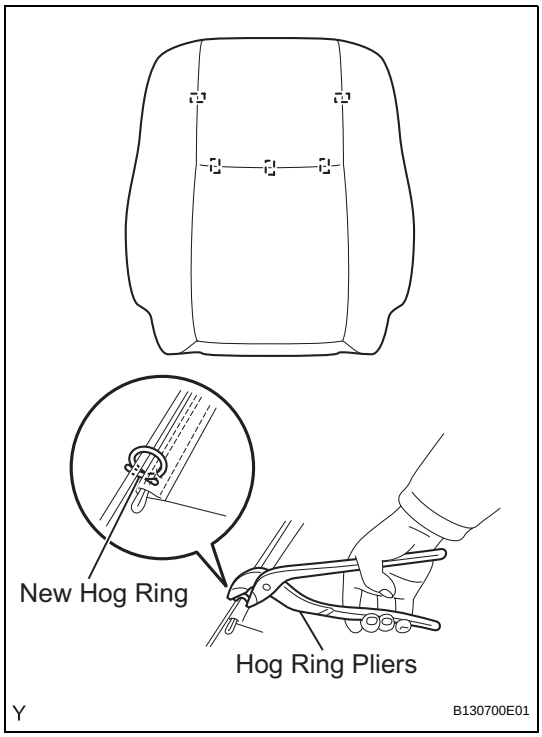

12. INSTALL FRONT SEATBACK COVER

(a) Using hog ring pliers, install the front seatback cover with 5 new hog rings.

NOTICE:

- **Do not soil or scratch the front seatback cover.**
- **When installing the hog rings, minimize wrinkles as far as possible.**

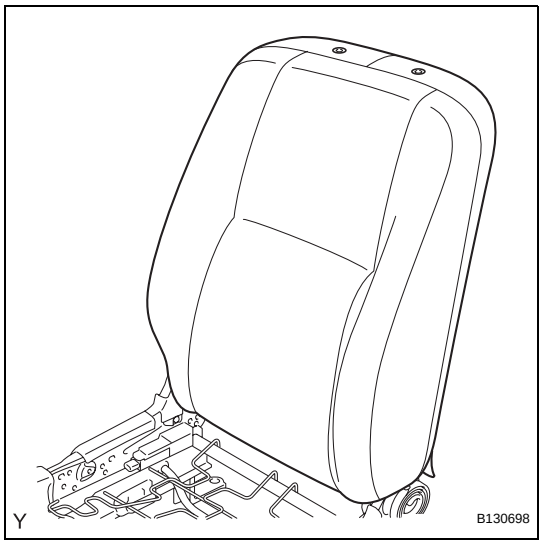

13. INSTALL FRONT SEATBACK ASSEMBLY

(a) Install the front seatback.

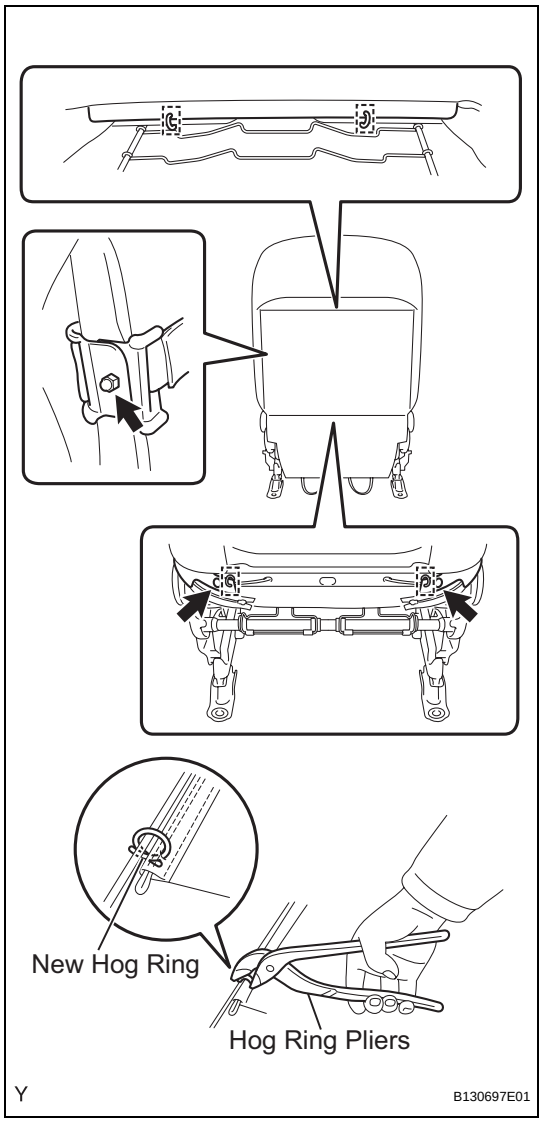

(b) w/ Front Seat Side Airbag:
  (1) Fully cover the airbag with the 2 front seatback cover brackets and tighten the nut.
  Torque: 5.5 N*m (55 kgf*cm, 49 in.*lbf)
  CAUTION:
  - **For vehicles with front seat side airbag, the front seatback cover must be securely installed. Otherwise, the front seat side airbag may not deploy properly.**
  - **Make sure that the strap is not twisted after installing the bracket.**
  - **Install the bracket securely.**

(c) Using hog ring pliers, install 4 new hog rings.
(d) Install the 2 clips.

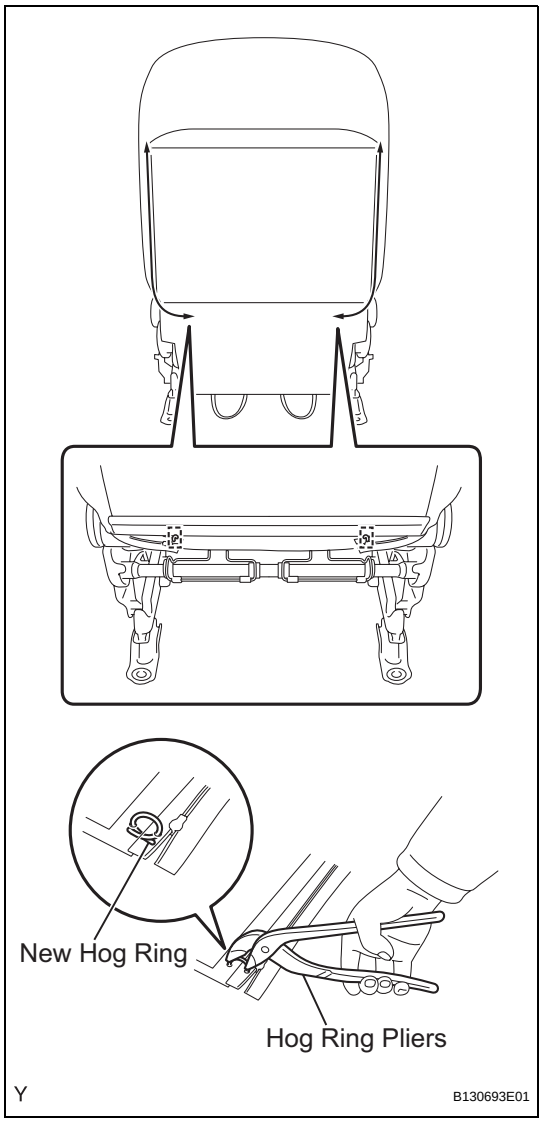

(e) Fasten the 2 zippers.
(f) Using hog ring pliers, install 2 new hog rings.

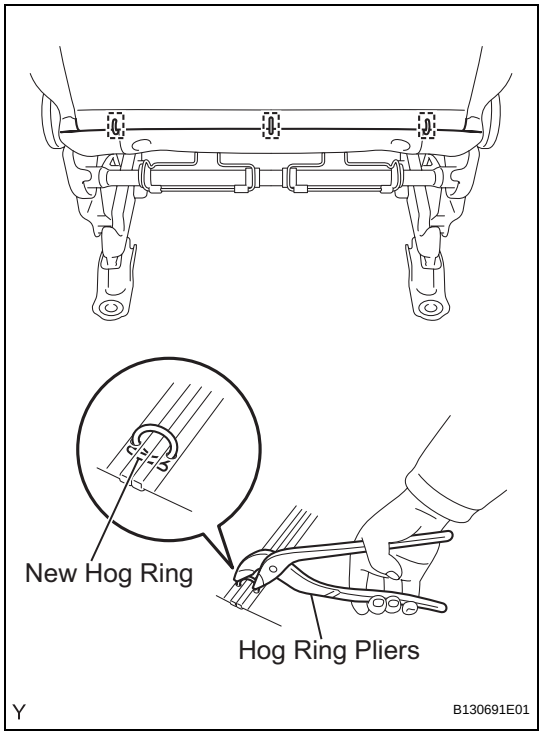

(g) Using hog ring pliers, install 3 new hog rings.

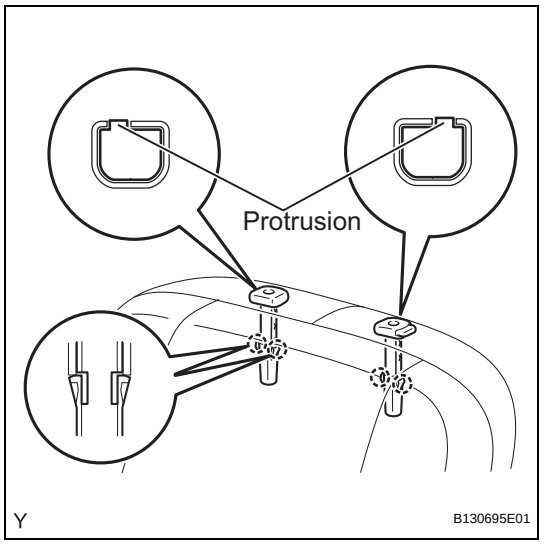

14. INSTALL FRONT SEAT HEADREST SUPPORT

HINT:

Use the same procedure for both sides.

(a) Align the protruding portion of the front seat headrest support with the installation groove of the front seatback frame.

(b) Engage the 2 claws and install the front seat headrest support.

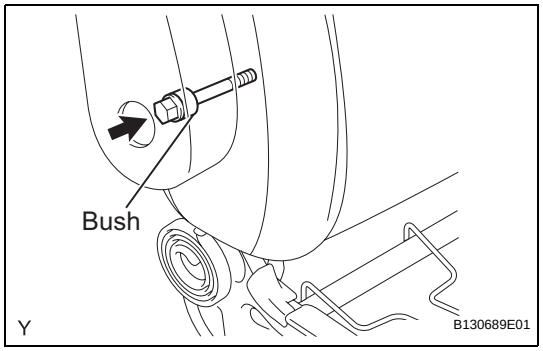

15. INSTALL FRONT SEAT ARMREST ASSEMBLY (for Driver Side)

(a) Install the bush onto the front seat armrest.

(b) Install the front seat armrest with the bolt.

Torque: 38 N*m (385 kgf*cm, 28 ft.*lbf)

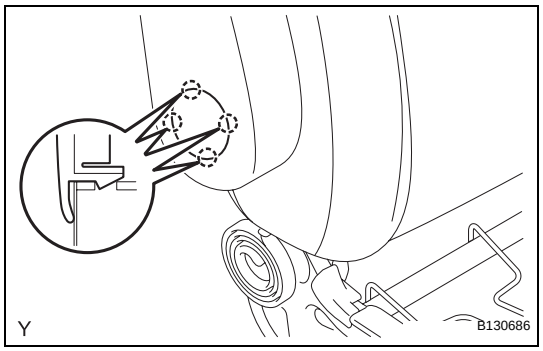

16. INSTALL FRONT SEAT ARMREST CAP (for Driver Side)

(a) Engage the 4 claws and install the front seat armrest cap.

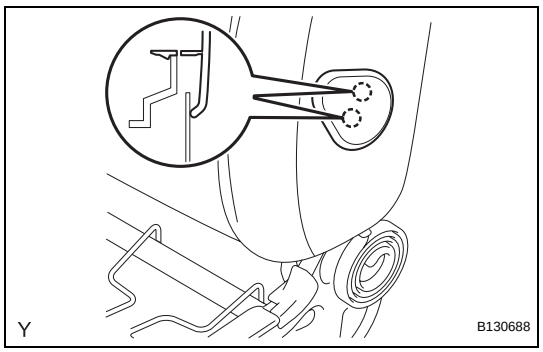

17. INSTALL FRONT SEAT ARMREST COVER (for Front Passenger Side)

(a) Engage the 2 claws and install the front seat armrest cover.

SE

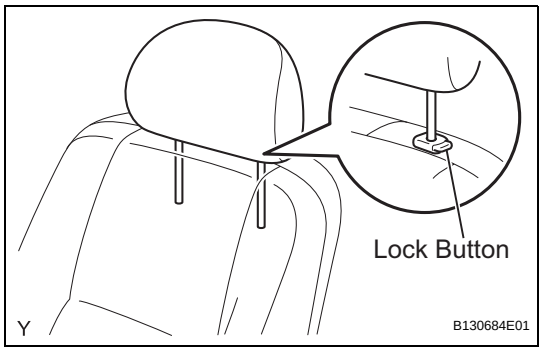

18. INSTALL FRONT SEAT HEADREST ASSEMBLY

(a) Push in the lock button of the front seat headrest support and install the front seat headrest.

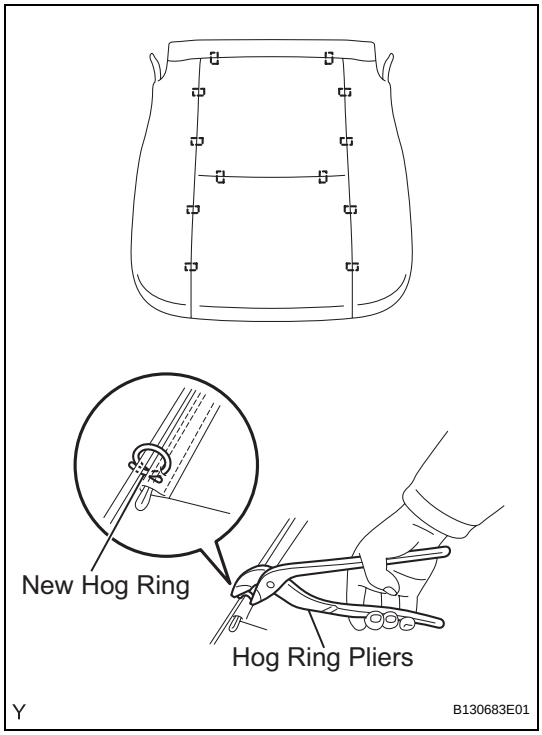

19. INSTALL FRONT SEAT CUSHION COVER

(a) Using hog ring pliers, install the front seat cushion cover with 12 new hog rings.

NOTICE:

- **Do not soil or scratch the front seat cushion cover.**
- **When installing the hog rings, minimize wrinkles as far as possible.**

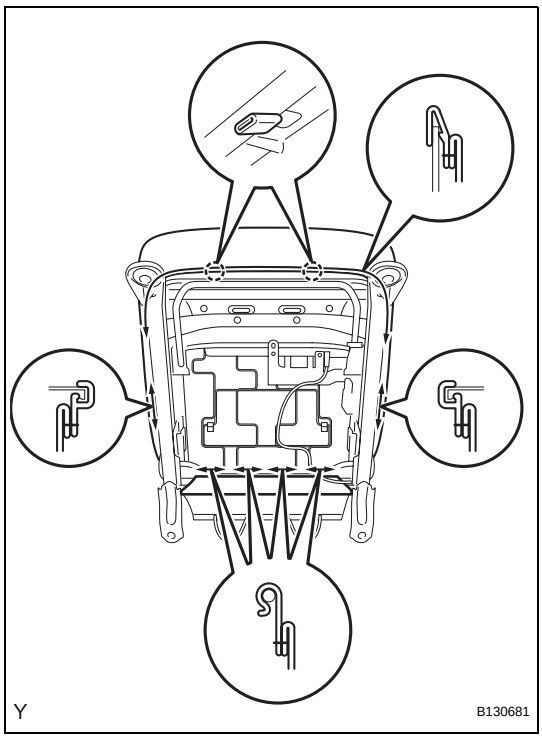

20. INSTALL FRONT SEAT CUSHION ASSEMBLY

(a) Engage the 2 claws and the 7 hooks and install the front seat cushion.

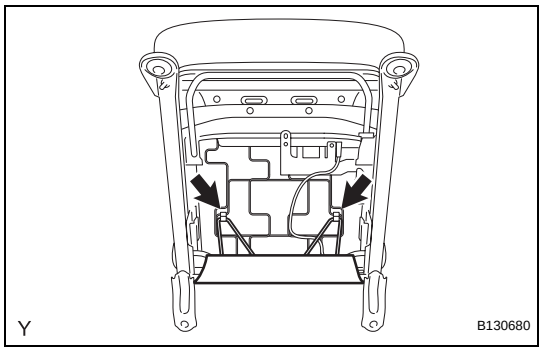

(b) Install the 2 front seatback cover bands.

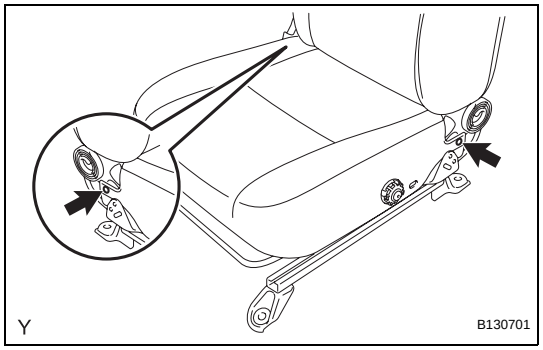

(c) Install the 2 clips.

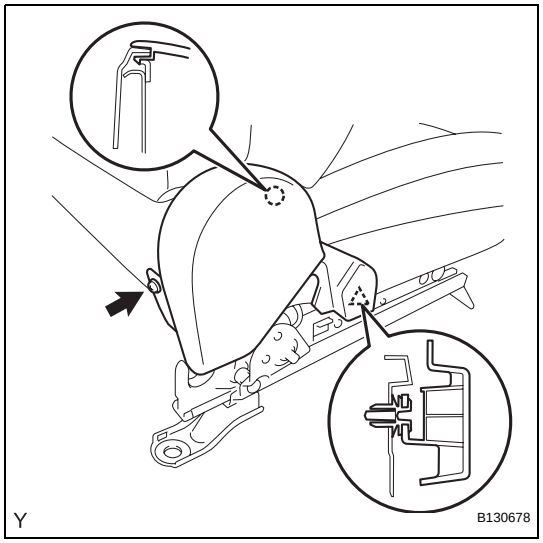

21. INSTALL FRONT SEAT CUSHION INNER SHIELD

(a) Engage the claw and the clip and install the front seat cushion inner shield.

(b) Tighten the screw.

22. INSTALL FRONT SEAT INNER BELT ASSEMBLY (See page SB-32)

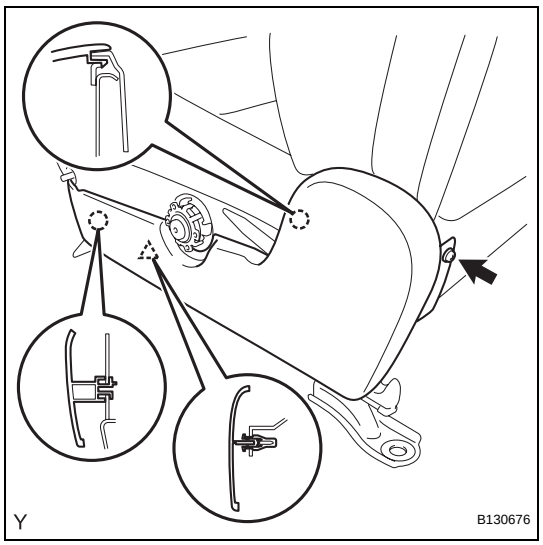

23. INSTALL FRONT SEAT CUSHION OUTSIDE SHIELD

(a) Engage the 2 claws and the clip and install the front seat cushion outside shield.

(b) Tighten the screw.

SE

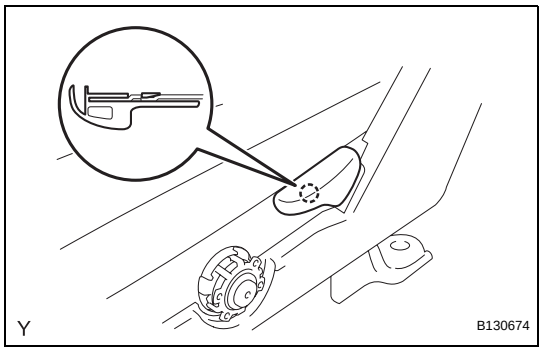

24. INSTALL RECLINING ADJUSTER RELEASE HANDLE

(a) Engage the claw and install the reclining adjuster release handle.

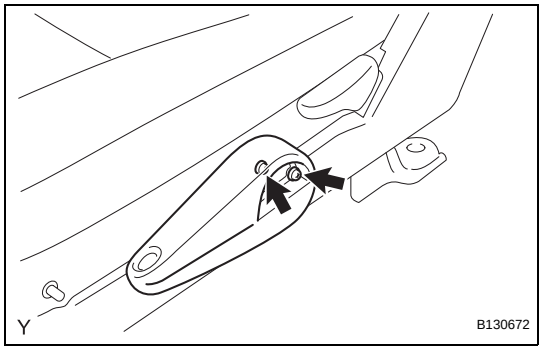

25. INSTALL VERTICAL SEAT ADJUSTER HANDLE (for Driver Side)

(a) Install the vertical seat adjuster handle with the 2 screws.

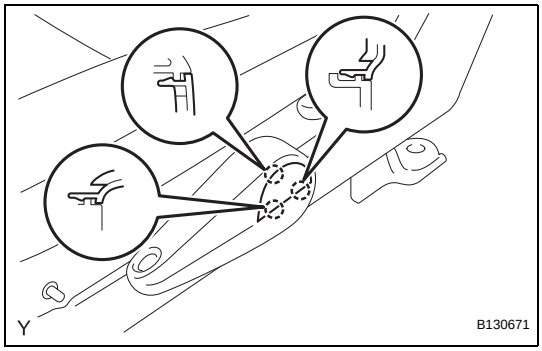

26. INSTALL VERTICAL SEAT ADJUSTER HANDLE COVER (for Driver Side)

(a) Engage the 3 claws and install the vertical seat adjuster handle cover.

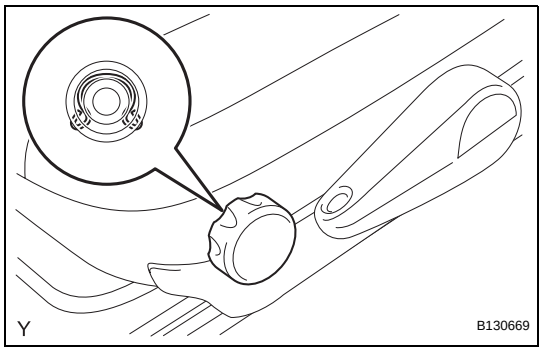

27. INSTALL VERTICAL SEAT ADJUSTER KNOB (for Driver Side)

(a) Engage the snap ring and install the vertical seat adjuster knob.

INSTALLATION

HINT:
The procedure described below is for the driver side. Use the same procedure for both the driver and front passenger sides, unless otherwise specified.

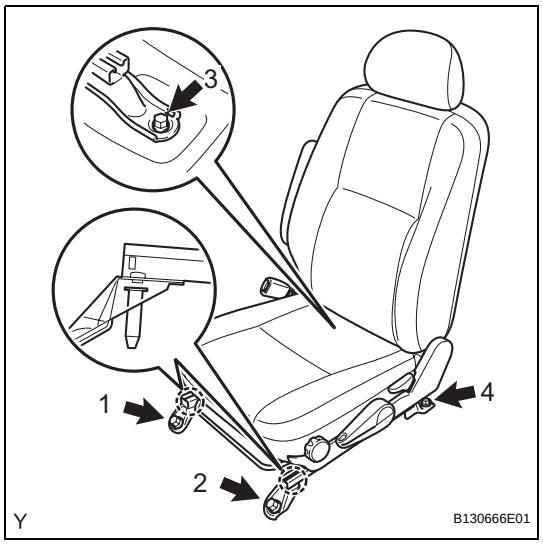

1. INSTALL FRONT SEAT ASSEMBLY

NOTICE:

Follow the procedure described below in order to prevent the seat tracks from locking separately.

(a) Insert the 2 locating pins through the 2 body holes, place the front seat in the most rearward position and make sure that the inner and outer seat tracks are locked securely.

(b) Tighten bolt 1 and then bolt 2 onto the front side.
Torque: 37 N*m (375 kgf*cm, 27 ft.*lbf)

(c) Move the front seat to the most forward position, and then make sure that the inner and outer seat tracks are locked securely.

(d) Tighten bolt 3 and then bolt 4 onto the rear side.
Torque: 37 N*m (375 kgf*cm, 27 ft.*lbf)

(e) Make sure that the inner and outer seat tracks lock simultaneously after the seat is moved.
HINT:
If the inner and outer seat tracks do not lock simultaneously, loosen the bolts and adjust the seat tracks.

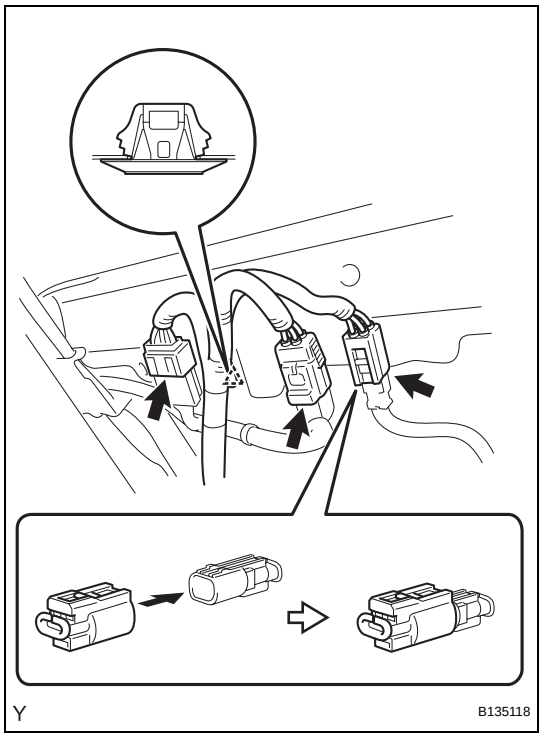

(f) for Driver Side:
(1) Connect the 2 buckle switch connectors.
(2) w/ Front Seat Side Airbag:
1. Connect the airbag connector.
(3) Install the clamp.

SE

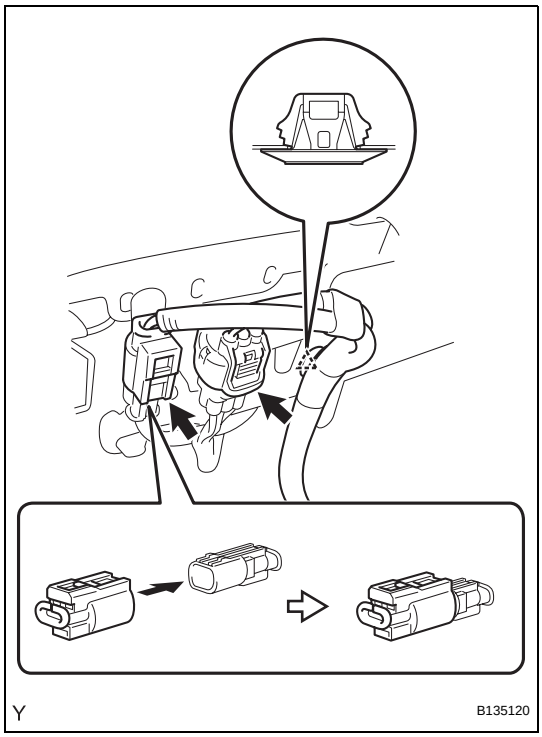

(g) for Front Passenger Side:
  (1) Connect the connector.
  (2) w/ Front Seat Side Airbag:
    1. Connect the airbag connector.
  (3) Install the clamp.

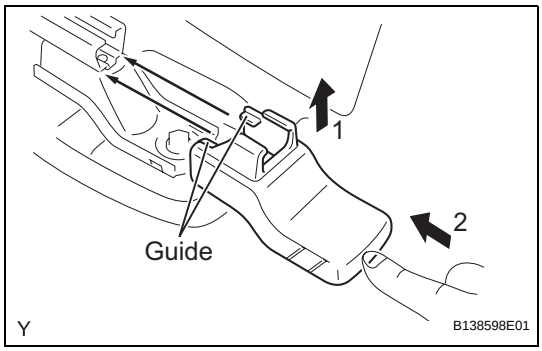

2. INSTALL FRONT SEAT TRACK COVER

HINT:

Use the same procedure for both sides.

(a) Insert the front seat track cover 2 guides in between the seat rail and the seat leg. Then slightly lift up the front seat track cover rear part and carefully push the front seat track cover in until it cannot be pushed in any further.

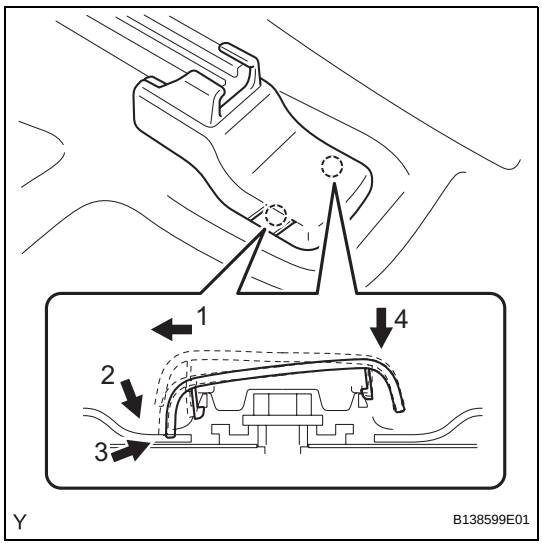

(b) Carefully insert the front seat track cover outside claw into the seat leg corner groove according to the procedure shown in the illustration.

(c) Carefully push directly from the top of the front seat track cover inside claw to insert it into the seat leg corner groove, as shown in the illustration.

3. CONNECT CABLE TO NEGATIVE BATTERY TERMINAL

Torque: 3.9 N*m (40 kgf*cm, 35 in.*lbf)

4. INSPECT SRS WARNING LIGHT (w/ Front Seat Side Airbag)

(See page RS-29)

SE

REAR SEAT ASSEMBLY (for LH Side)

COMPONENTS

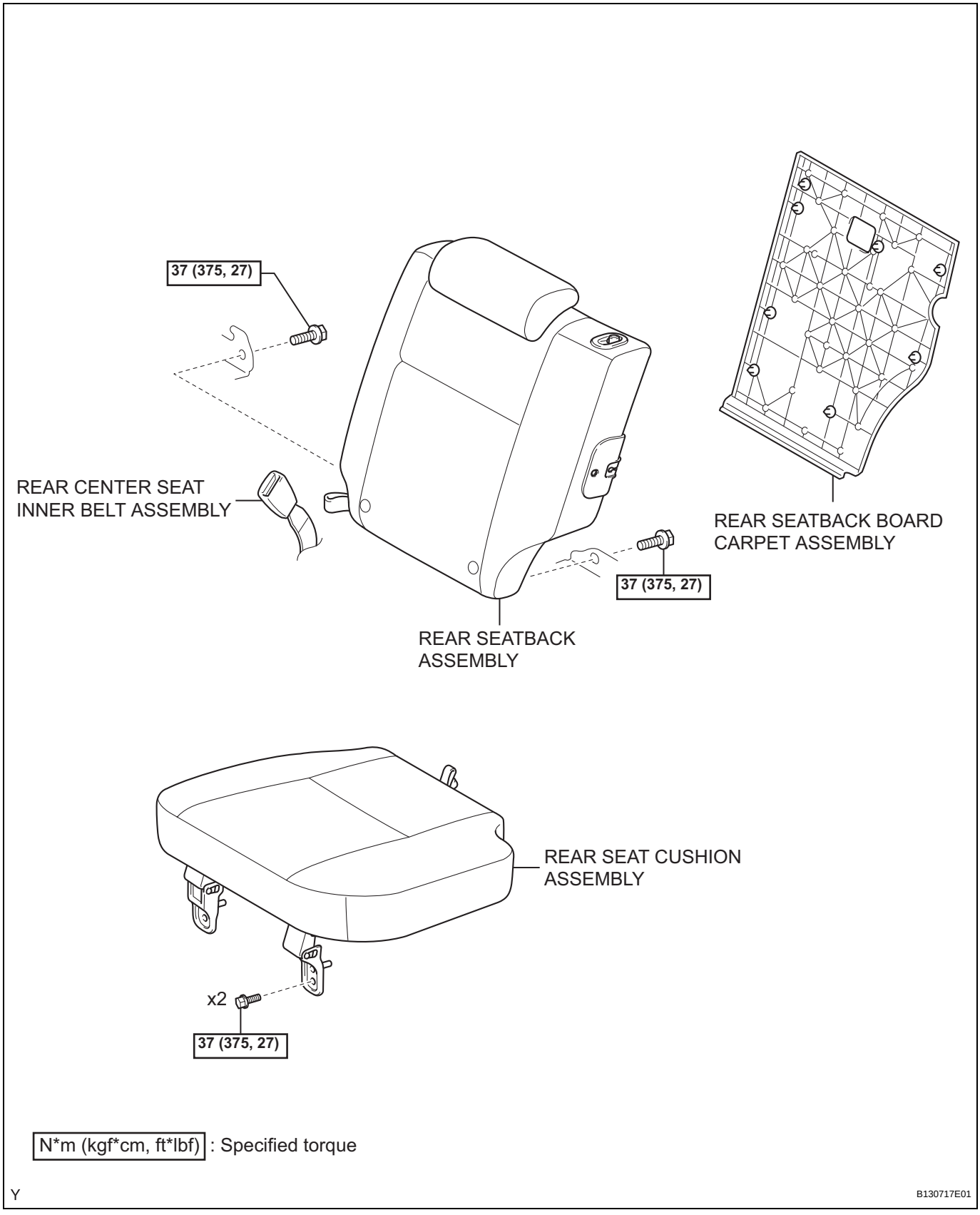

SE

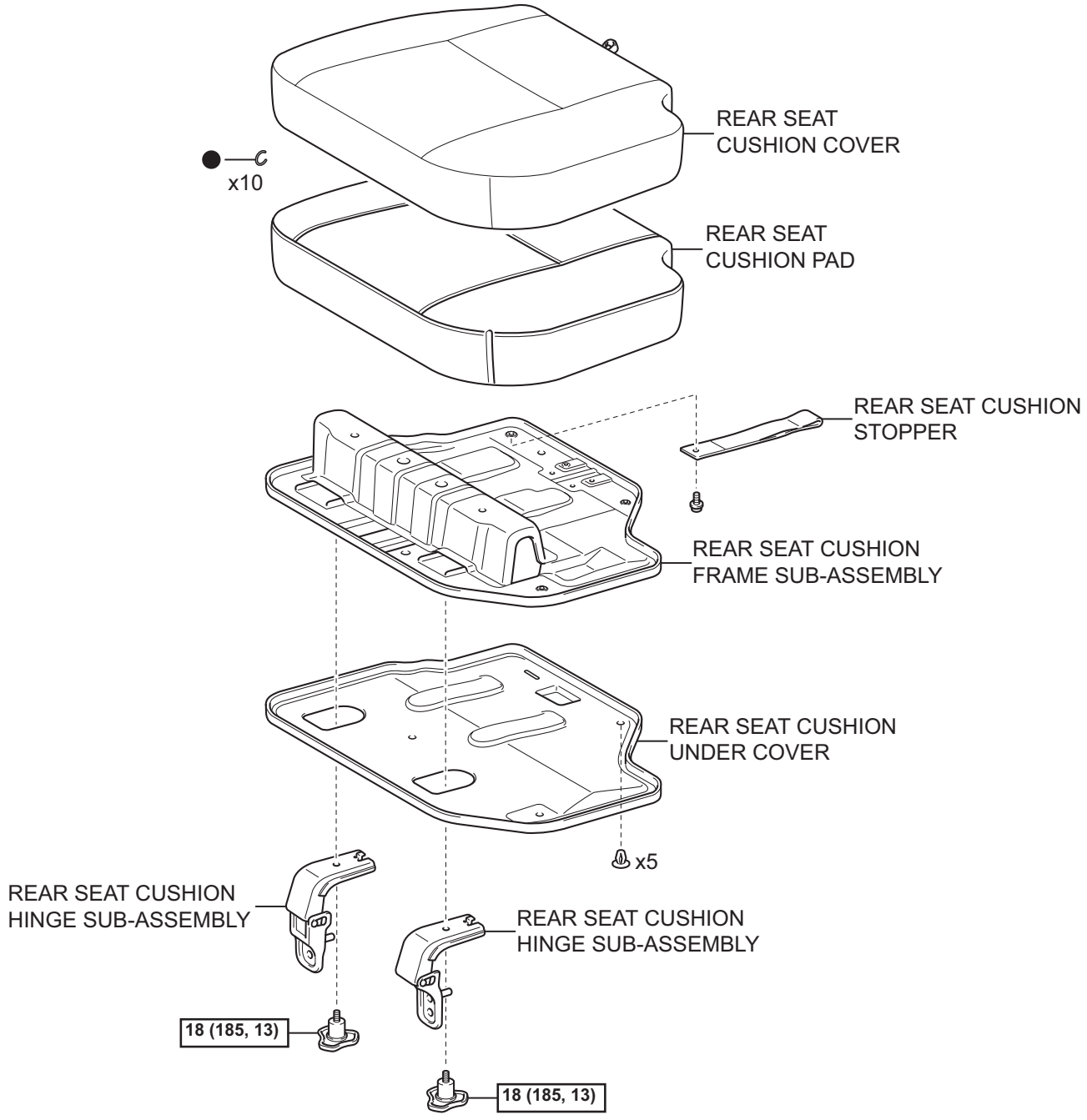

N*m (kgf*cm, ft*lbf) : Specified torque

● Non-reusable part

Y

B130722E01

SE

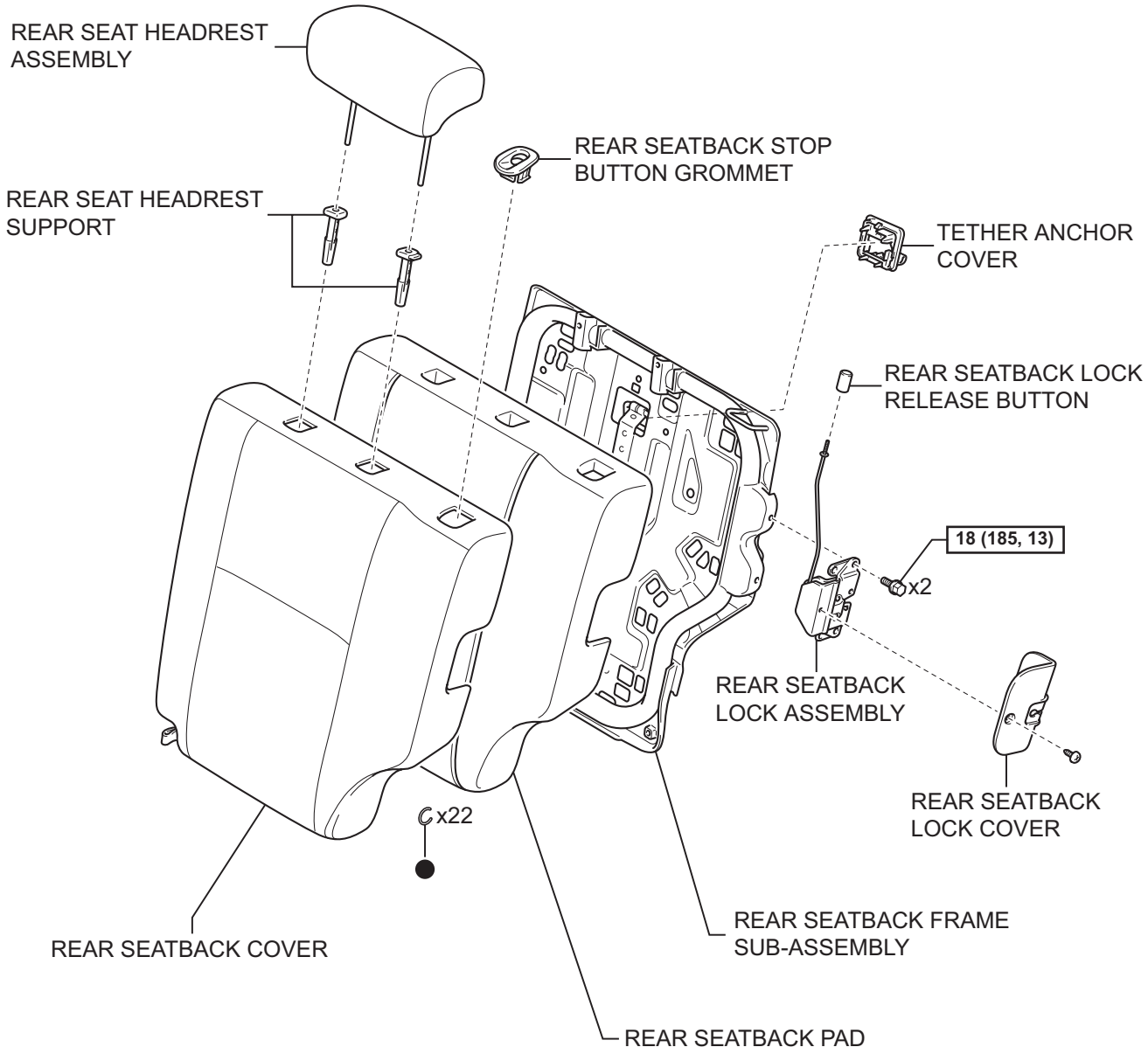

N*m (kgf*cm, ft*lbf) : Specified torque

● Non-reusable part

Y

B130729E01

SE

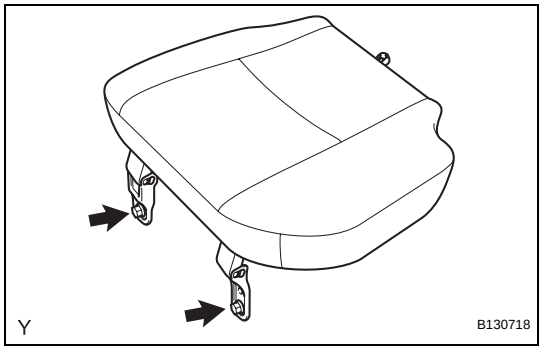

REMOVAL

1. REMOVE REAR SEAT CUSHION ASSEMBLY

(a) Remove the 2 bolts and the rear seat cushion.

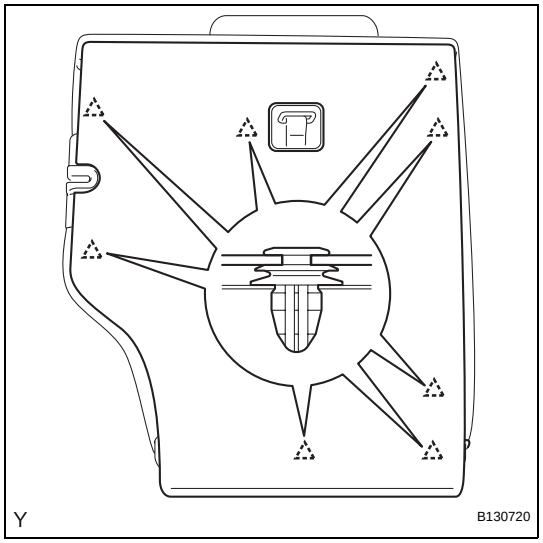

2. REMOVE REAR SEATBACK BOARD CARPET ASSEMBLY

(a) Pull the rear seatback lock release button and tilt the rear seatback forward.

(b) Disengage the 8 clips and remove the rear seatback board carpet.

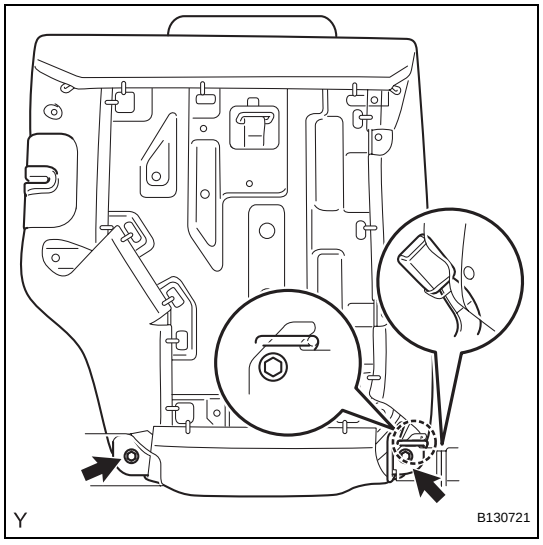

3. REMOVE REAR SEATBACK ASSEMBLY

(a) Remove the rear center seat inner belt from the rear seatback holder.

(b) Remove the 2 bolts.

(c) Disengage the hook and remove the rear seatback.

SE

DISASSEMBLY

CAUTION:
Wear protective gloves. Sharp surfaces on the rear seat cushion frame and the rear seatback frame could cause injuries to your hands.

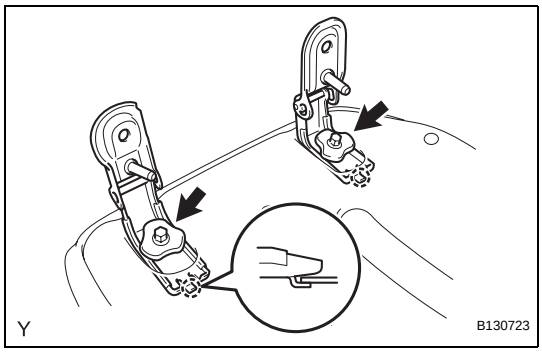

1. REMOVE REAR SEAT CUSHION HINGE SUB-ASSEMBLY

HINT:
Use the same procedure for both sides.

(a) Remove the bolt.
(b) Disengage the hook and remove the rear seat cushion hinge.

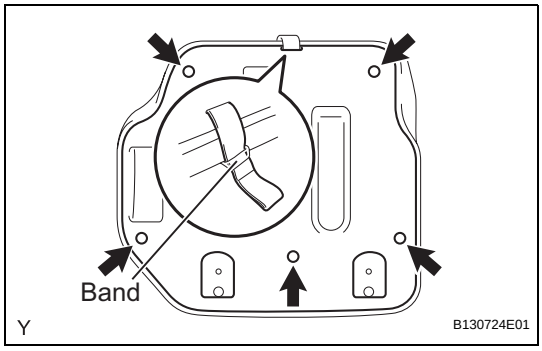

2. REMOVE REAR SEAT CUSHION UNDER COVER

(a) Remove the rear seat cushion stopper from the rear seat cushion cover band and the slit of the rear seat cushion under cover.
(b) Using a clip remover, remove the 5 clips and the rear seat cushion under cover.

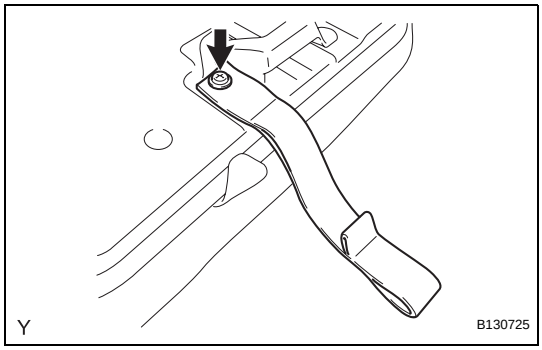

3. REMOVE REAR SEAT CUSHION STOPPER

(a) Remove the screw and the rear seat cushion stopper.

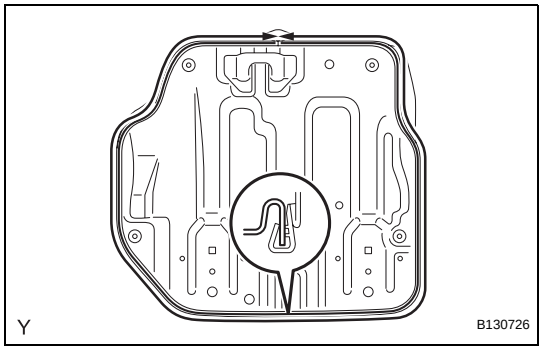

4. REMOVE REAR SEAT CUSHION FRAME SUB-ASSEMBLY

(a) Disengage the hook and remove the rear seat cushion frame.

SE

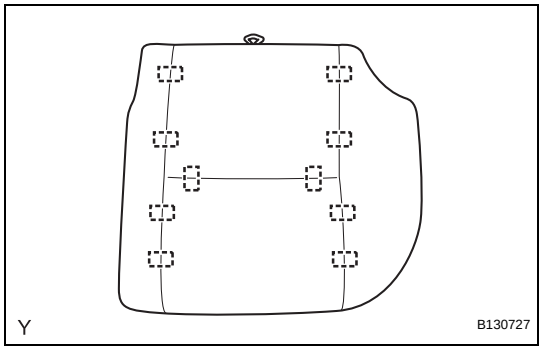

5. REMOVE REAR SEAT CUSHION COVER

(a) Remove the 10 hog rings and the rear seat cushion cover.

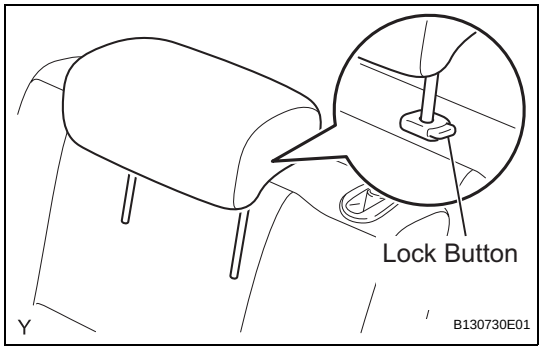

6. REMOVE REAR SEAT HEADREST ASSEMBLY

(a) Push the lock button of the rear seat headrest support and remove the rear seat headrest.

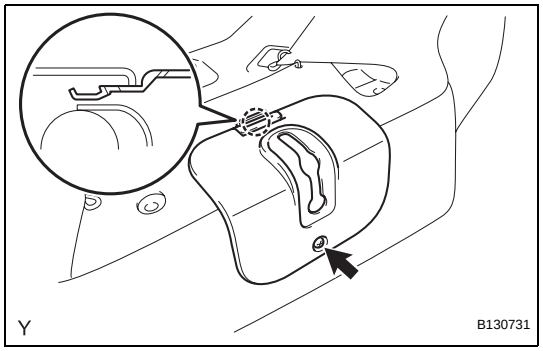

7. REMOVE REAR SEATBACK LOCK COVER

(a) Remove the screw.

(b) Disengage the claw and remove the rear seat back lock cover.

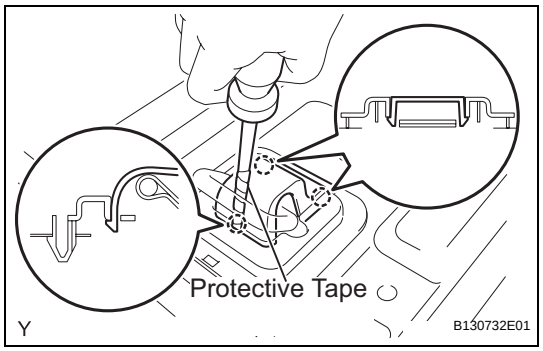

8. REMOVE TETHER ANCHOR COVER

(a) Using a screwdriver with its tip wrapped in protective tape, disengage the 2 claws and open the cover.

SE

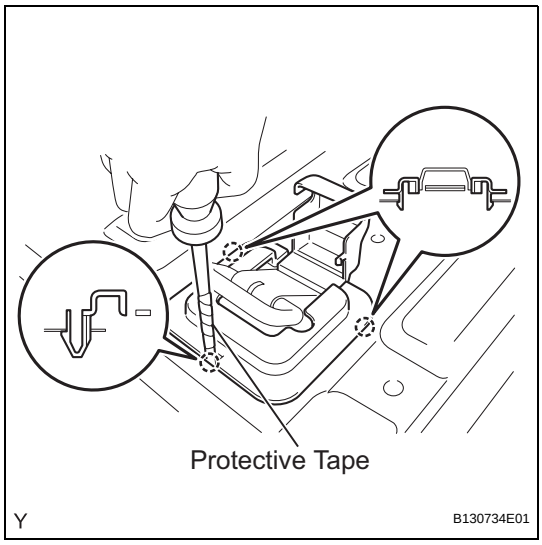

(b) Using a screwdriver with its tip wrapped in protective tape, disengage the 3 claws and remove the tether anchor cover.

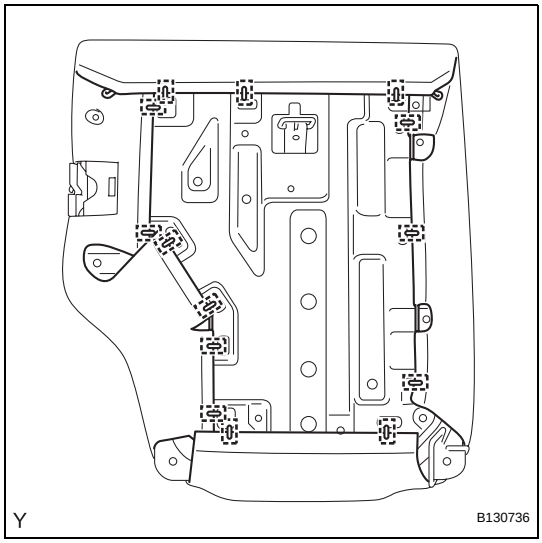

9. REMOVE REAR SEAT HEADREST SUPPORT

(a) Remove the 14 hog rings.

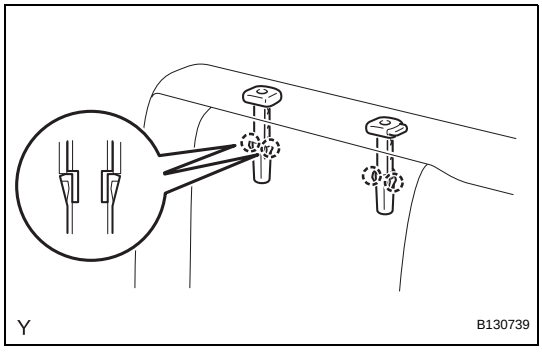

(b) Disengage the 2 claws and remove the rear seat headrest support.
HINT:
Use the same procedure for both sides.

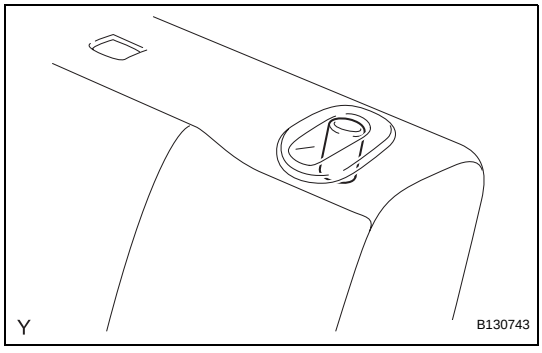

10. REMOVE REAR SEATBACK LOCK RELEASE BUTTON

(a) Remove the rear seatback lock release button.

SE

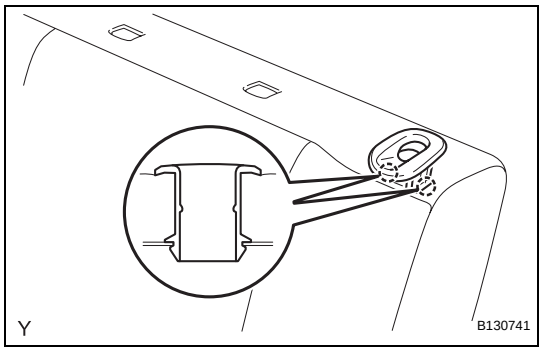

11. REMOVE REAR SEATBACK STOP BUTTON GROMMET

(a) Disengage the 2 claws and remove the rear seatback stop button grommet.

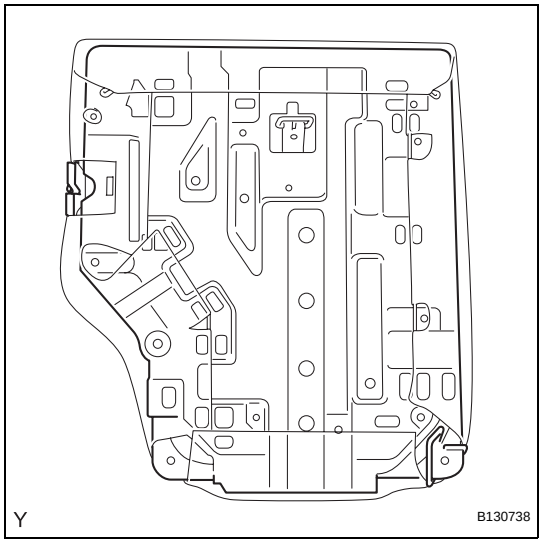

12. REMOVE REAR SEATBACK FRAME SUB-ASSEMBLY

(a) Remove the rear seatback frame.

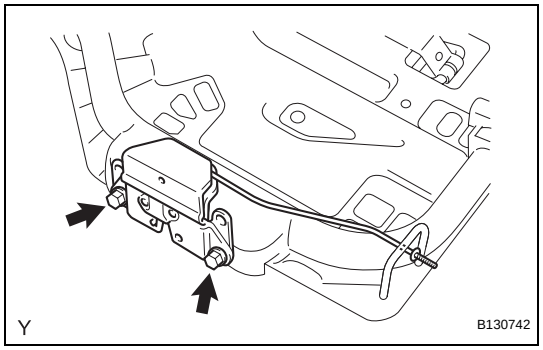

13. REMOVE REAR SEATBACK LOCK ASSEMBLY

(a) Remove the 2 bolts and the rear seatback lock.

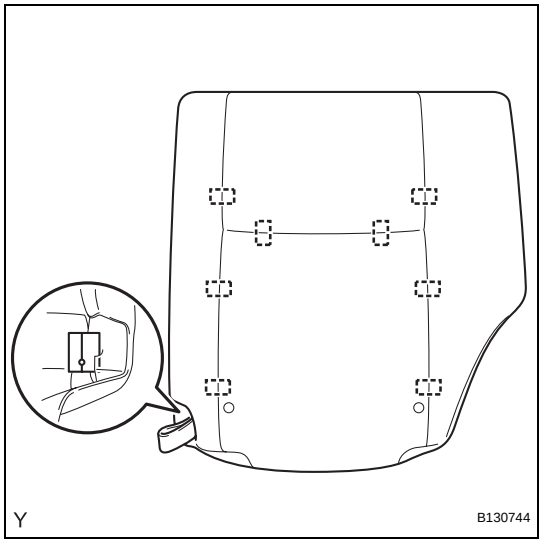

14. REMOVE REAR SEATBACK COVER

(a) Pass the hook of the rear seatback cover through the slit in the rear seatback pad.

(b) Remove the 8 hog rings and the rear seatback cover.

SE

REASSEMBLY

CAUTION:
Wear protective gloves. Sharp surfaces on the rear seat cushion frame and the rear seatback frame could cause injuries to your hands.

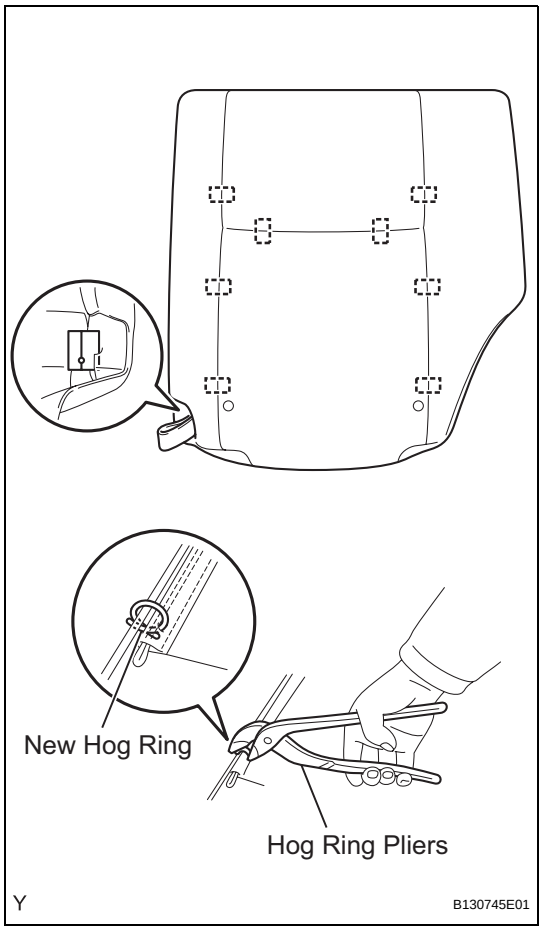

1. INSTALL REAR SEATBACK COVER

(a) Using hog ring pliers, install the rear seatback cover with 8 new hog rings.
NOTICE:
- **Do not soil or scratch the rear seatback cover.**
- **When installing the hog rings, minimize wrinkles as far as possible.**

(b) Pass the hook of the rear seatback cover through the slit in the rear seatback pad.

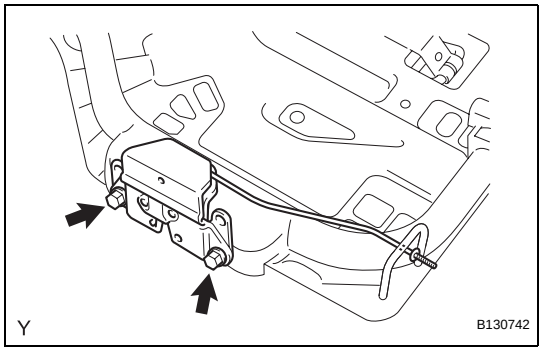

2. INSTALL REAR SEATBACK LOCK ASSEMBLY

(a) Install the rear seatback lock with the 2 bolts.
Torque: 18 N*m (185 kgf*cm, 13 ft.*lbf)

SE

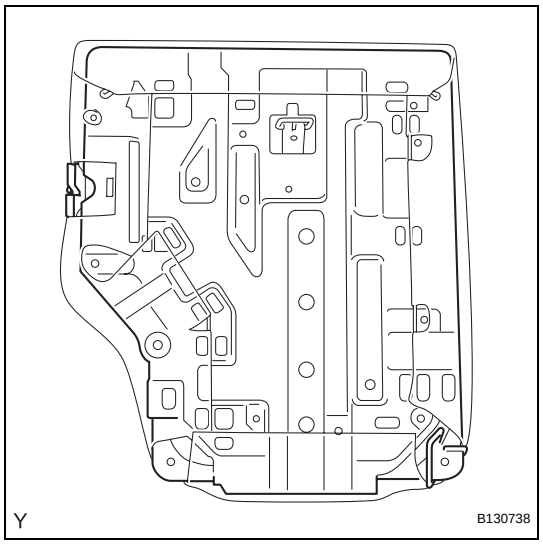

3. INSTALL REAR SEATBACK FRAME SUB-ASSEMBLY

(a) Install the rear seatback frame.

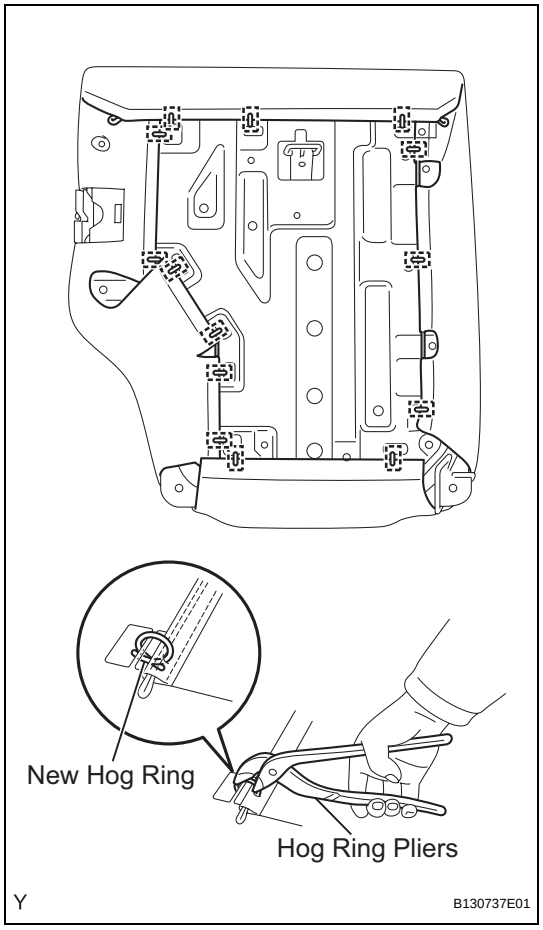

(b) Using hog ring pliers, install 14 new hog rings.

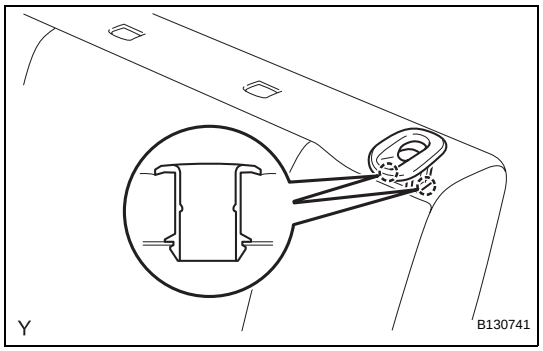

4. INSTALL REAR SEATBACK STOP BUTTON GROMMET

(a) Engage the 2 claws and install the rear seatback stop button grommet.

SE

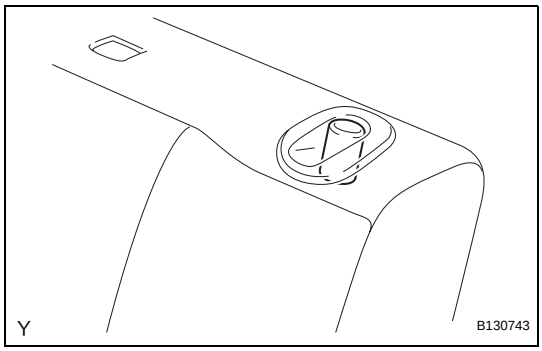

5. INSTALL REAR SEATBACK LOCK RELEASE BUTTON

(a) Install the rear seatback lock release button.

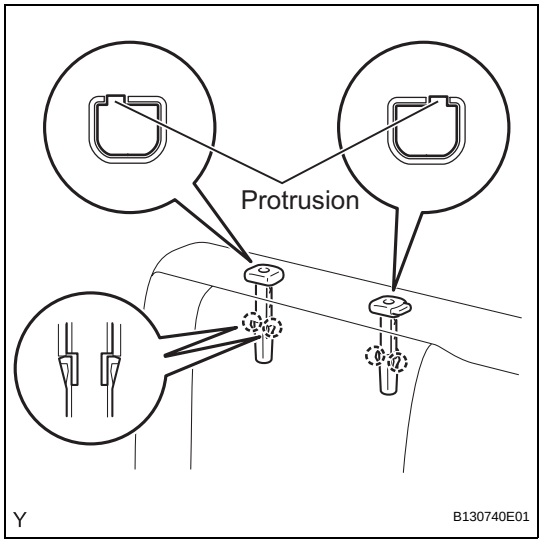

6. INSTALL REAR SEAT HEADREST SUPPORT

HINT:

Use the same procedure for both sides.

(a) Align the protruding portion of the rear seat headrest support with the installation groove of the rear seatback frame.

(b) Engage the 2 claws and install the rear seat headrest support.

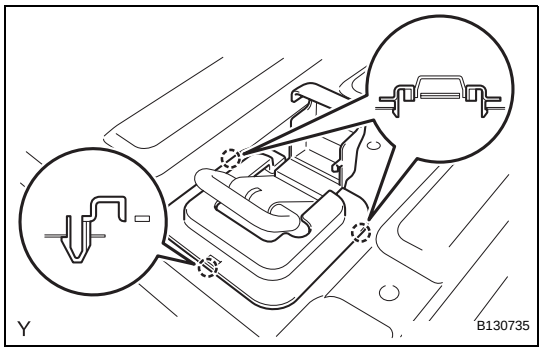

7. INSTALL TETHER ANCHOR COVER

(a) Engage the 3 claws and install the tether anchor cover.

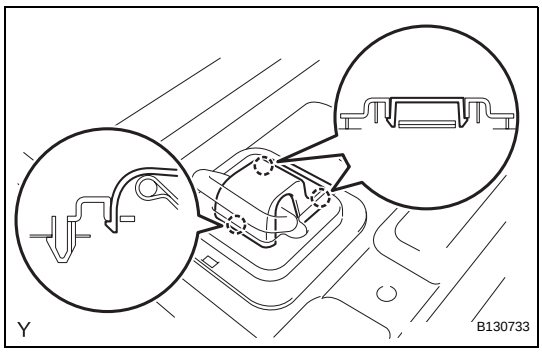

(b) Engage the 2 claws and close the cover.

SE

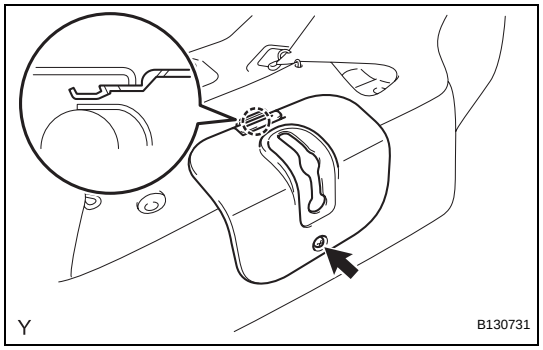

8. INSTALL REAR SEATBACK LOCK COVER

(a) Engage the claw and install the rear seatback lock cover.

(b) Tighten the screw.

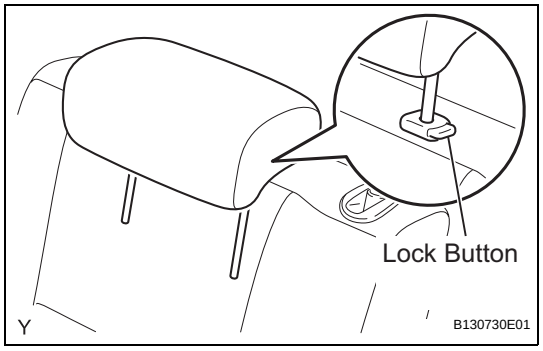

9. INSTALL REAR SEAT HEADREST ASSEMBLY

(a) Push the lock button of the rear seat headrest support and install the rear seat headrest.

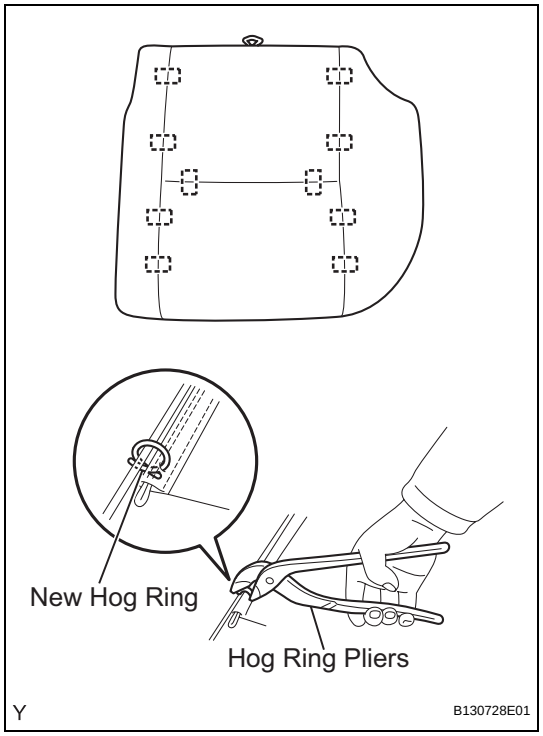

10. INSTALL REAR SEAT CUSHION COVER

(a) Using hog ring pliers, install the rear seat cushion cover with 10 new hog rings.

NOTICE:

- **Do not soil or scratch the rear seat cushion cover.**
- **When installing the hog rings, minimize wrinkles as far as possible.**

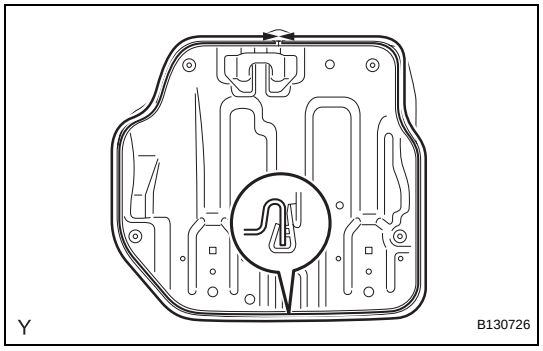

11. INSTALL REAR SEAT CUSHION FRAME SUB-ASSEMBLY

(a) Engage the hook and install the rear seat cushion frame.

SE

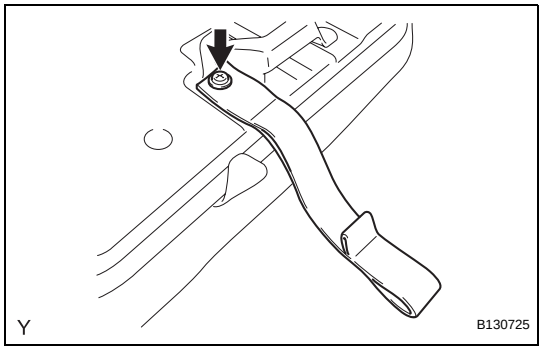

12. INSTALL REAR SEAT CUSHION STOPPER

(a) Install the rear seat cushion stopper with the screw.

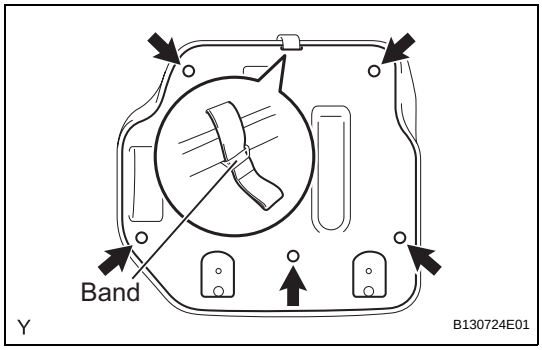

13. INSTALL REAR SEAT CUSHION UNDER COVER

(a) Insert the rear seat cushion stopper into the slit of the rear seat cushion under cover.

(b) Install the rear seat cushion under cover with the 5 clips.

(c) Install the rear seat cushion stopper into the rear seat cushion cover band.

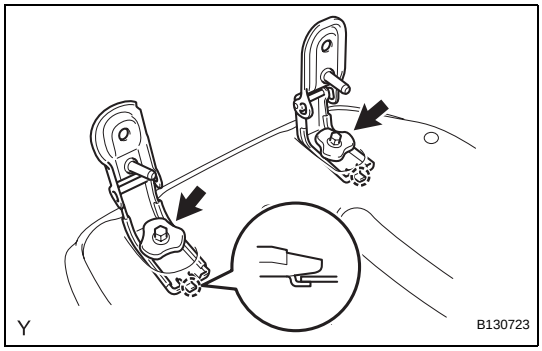

14. INSTALL REAR SEAT CUSHION HINGE SUB-ASSEMBLY

HINT:

Use the same procedure for both sides.

(a) Engage the hook and install the rear seat cushion hinge.

(b) Install the rear seat cushion hinge with the bolt.
Torque: 18 N*m (185 kgf*cm, 13 ft.*lbf)

INSTALLATION

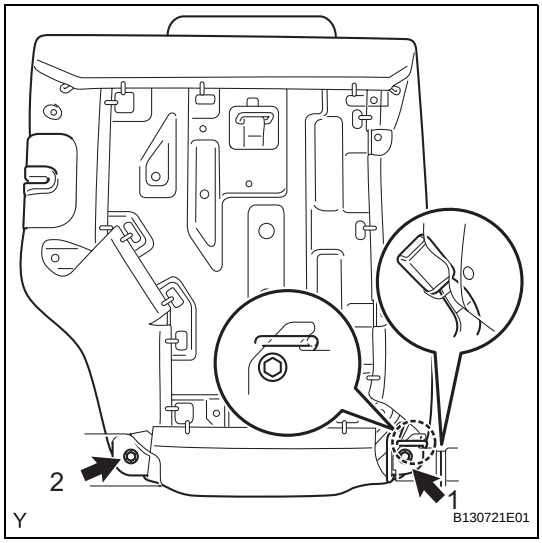

1. INSTALL REAR SEATBACK ASSEMBLY

(a) Engage the hook and temporarily install the rear seatback with the 2 bolts.

(b) Tighten the 2 bolts in the sequence shown in the illustration.
Torque: 37 N*m (375 kgf*cm, 27 ft.*lbf)

(c) Install the rear center seat inner belt into the rear seatback holder.

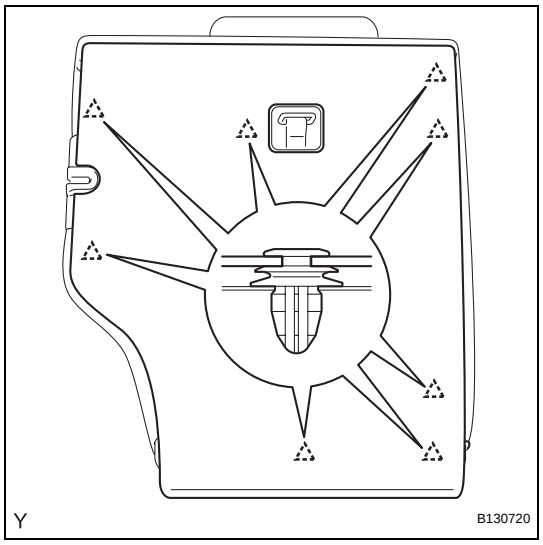

2. INSTALL REAR SEATBACK BOARD CARPET ASSEMBLY

(a) Engage the 8 clips and install the rear seatback board carpet.

(b) Pull up the rear seatback.

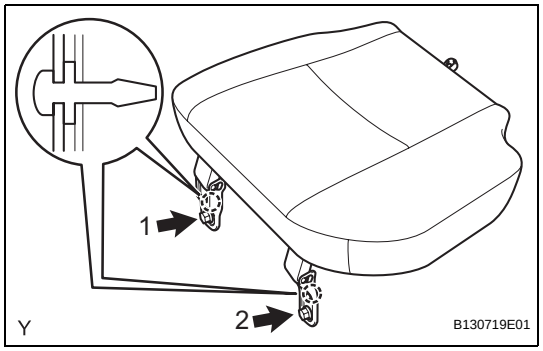

3. INSTALL REAR SEAT CUSHION ASSEMBLY

(a) Insert the 2 locating pins into the body hole.

(b) Temporarily install the rear seat cushion with the 2 bolts.

(c) Tighten the 2 bolts in the sequence shown in the illustration.

Torque: 37 N*m (375 kgf*cm, 27 ft.*lbf)

REAR SEAT ASSEMBLY (for RH Side)

COMPONENTS

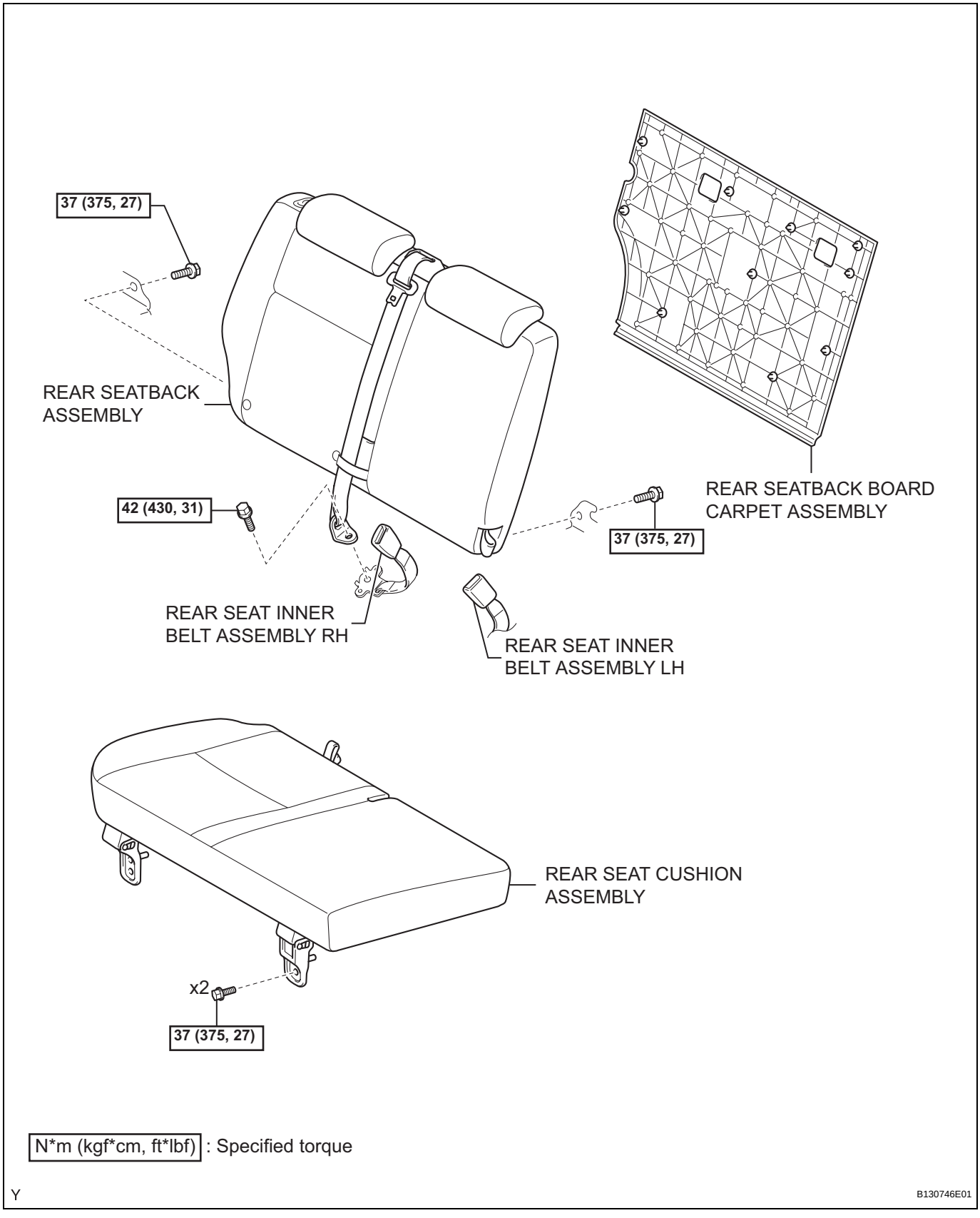

SE

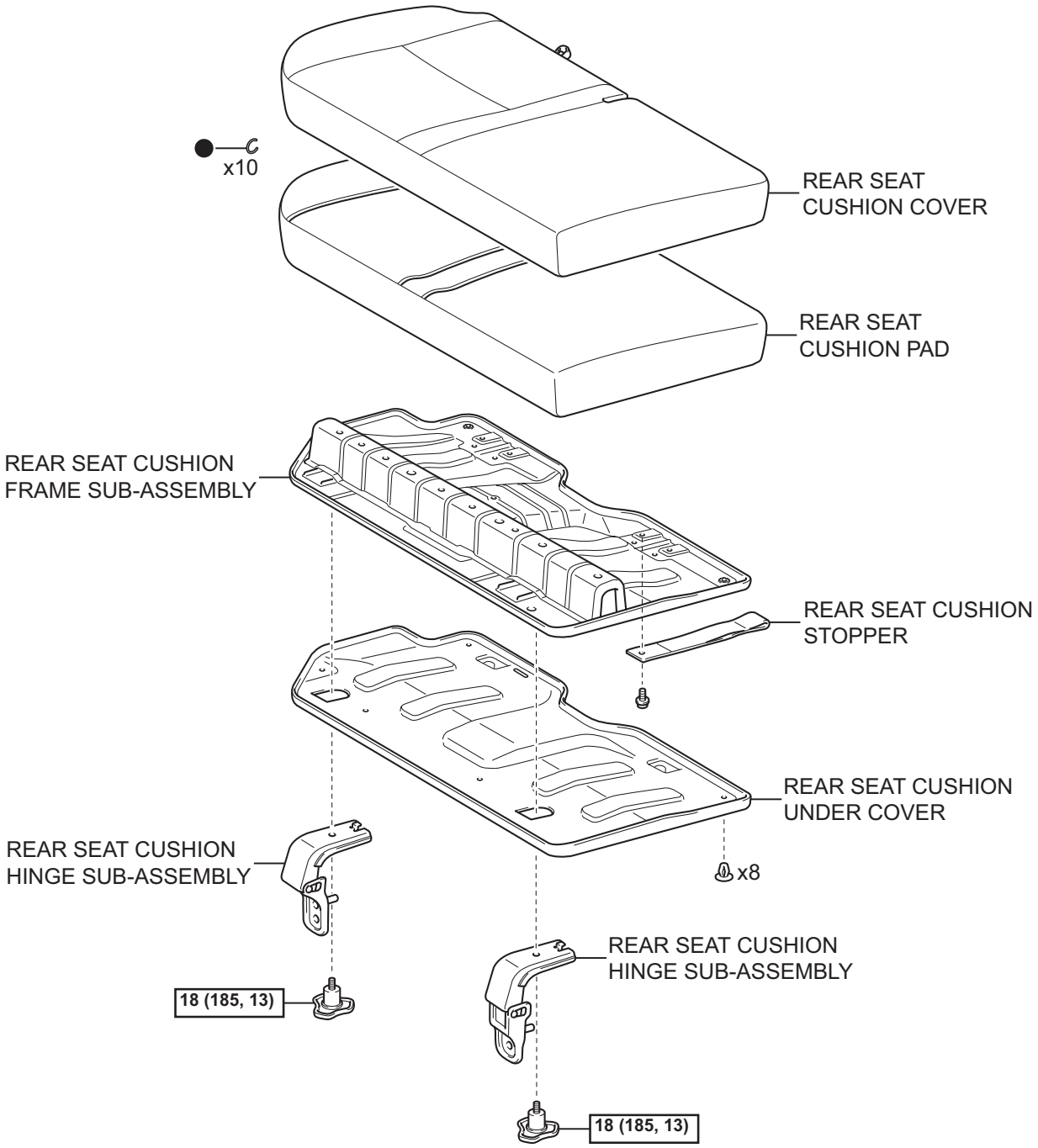

SE

N*m (kgf*cm, ft*lbf) : Specified torque

● Non-reusable part

Y

B130751E01

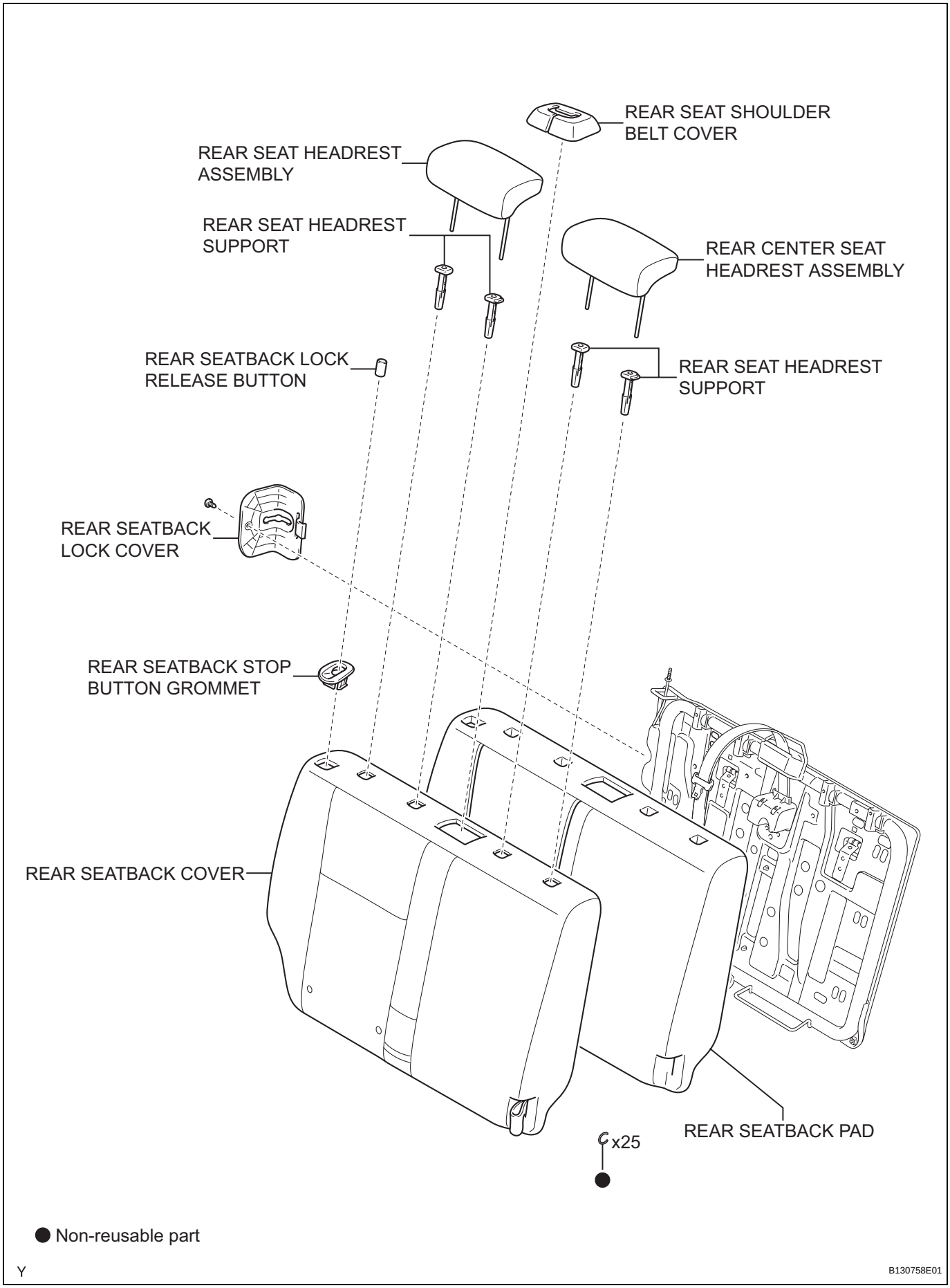
REAR SEAT SHOULDER BELT COVER
REAR SEAT HEADREST ASSEMBLY
REAR SEAT HEADREST SUPPORT
REAR CENTER SEAT HEADREST ASSEMBLY
REAR SEATBACK LOCK RELEASE BUTTON
REAR SEAT HEADREST SUPPORT
REAR SEATBACK LOCK COVER
REAR SEATBACK STOP BUTTON GROMMET
REAR SEATBACK COVER
REAR SEATBACK PAD
x25
● Non-reusable part
Y
B130758E01

SE

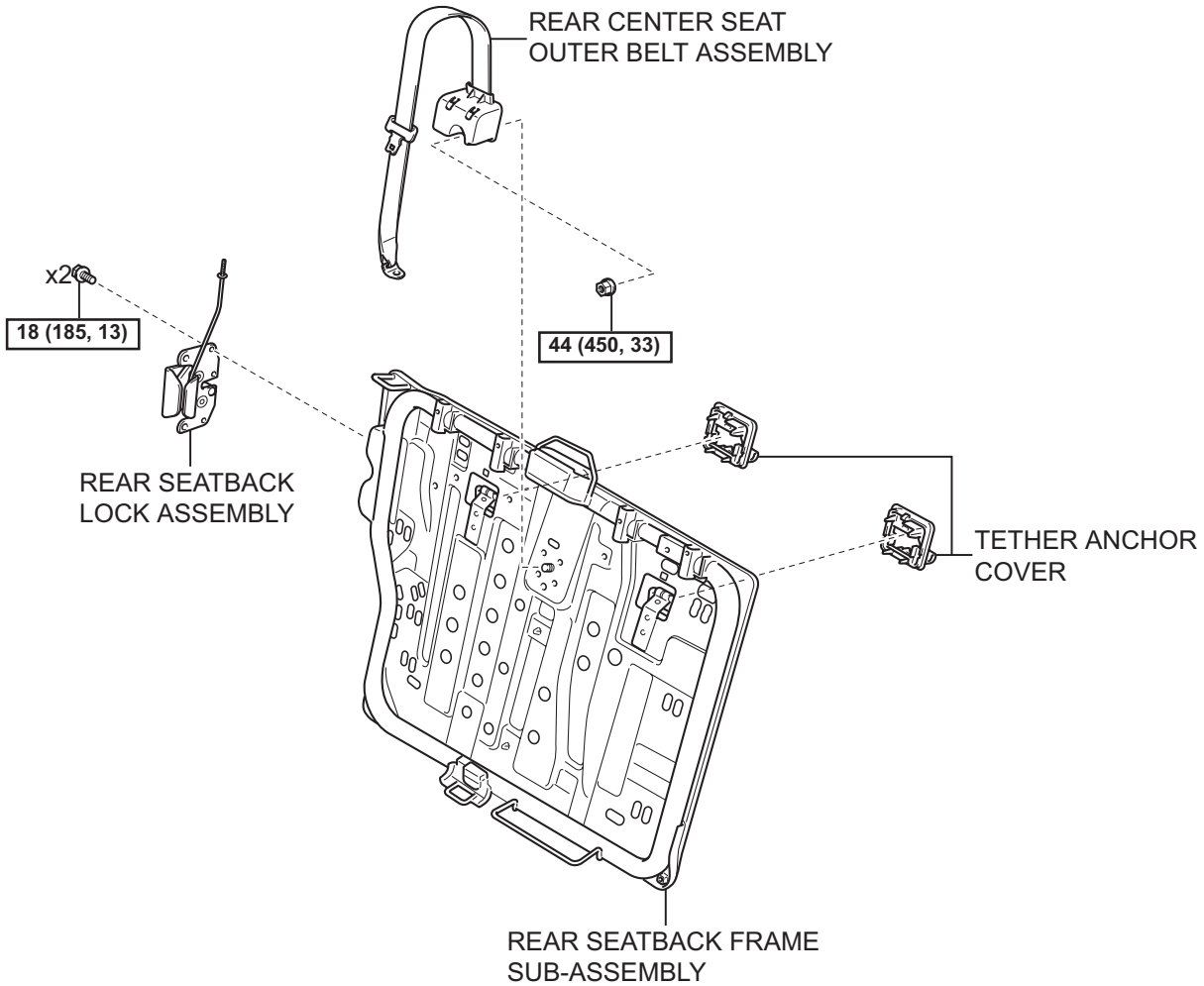

SE

N*m (kgf*cm, ft*lbf) : Specified torque

Y

B135115E01

FRONT PASSENGER SEAT BELT WARNING LIGHT

COMPONENTS

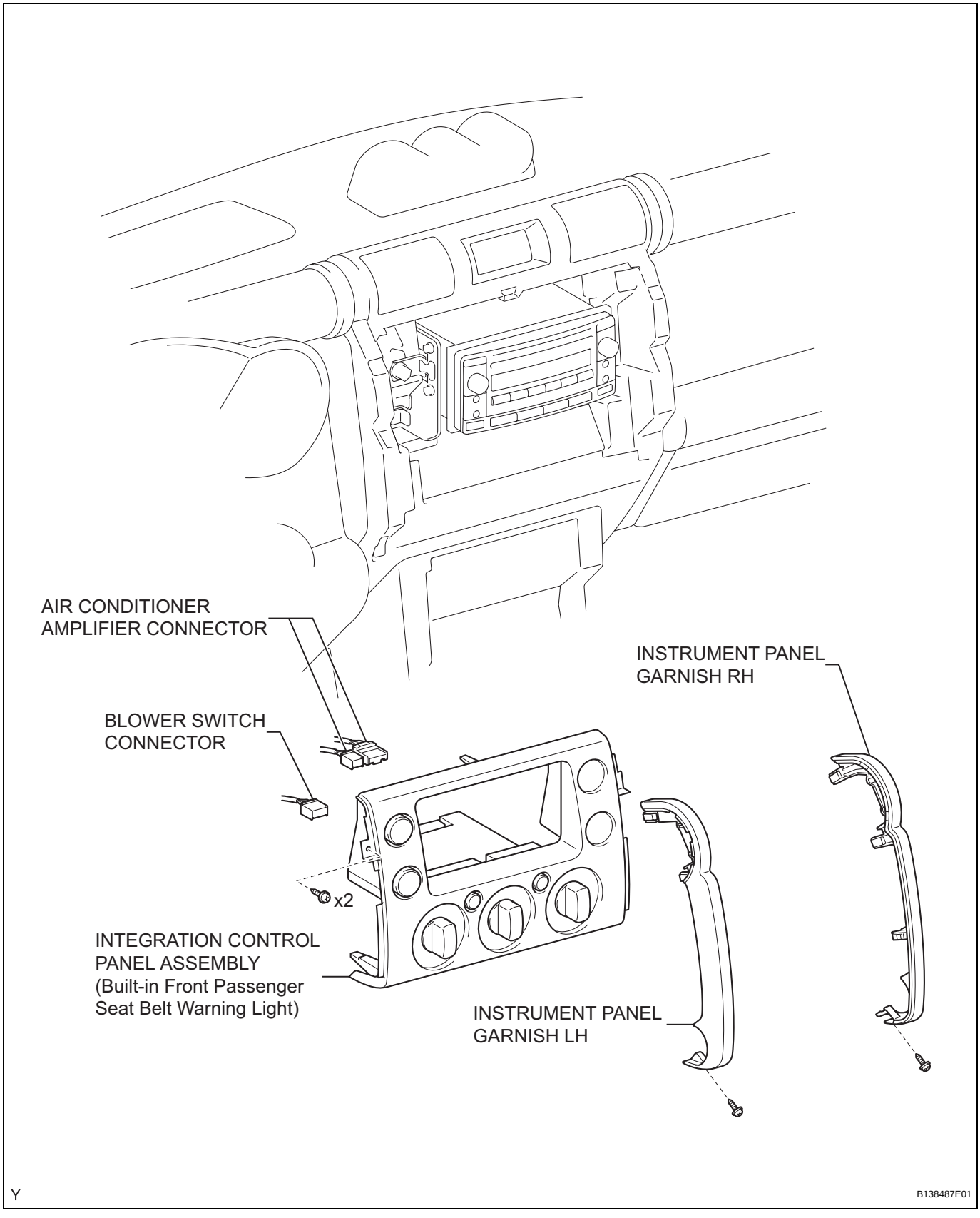

SB

REMOVAL

1. **DISCONNECT CABLE FROM NEGATIVE BATTERY TERMINAL**
2. **REMOVE INSTRUMENT PANEL GARNISH RH (See page IP-10)**
3. **REMOVE INSTRUMENT PANEL GARNISH LH (See page IP-10)**
4. **REMOVE INTEGRATION CONTROL PANEL ASSEMBLY (Built-in Front Passenger Seat Belt Warning Light)**
   (a) Remove the 2 screws.
   (b) Disengage the 4 clips and remove the front passenger seat belt warning light.
   (c) Disconnect the 2 air conditioner amplifier connectors and the blower switch connector.

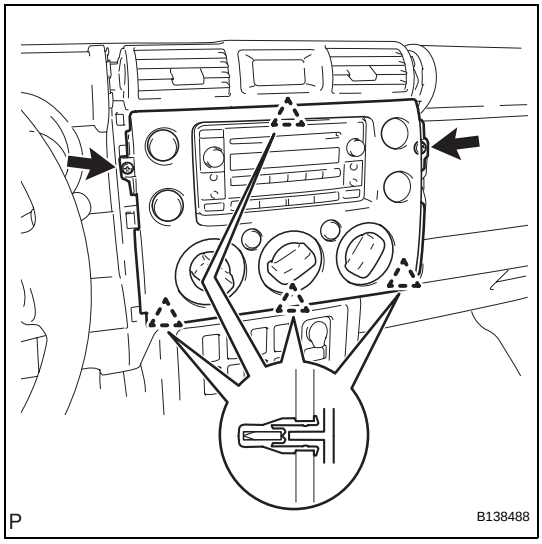

INSPECTION

1. **INSPECT INTEGRATION CONTROL PANEL ASSEMBLY (Built-in Front Passenger Seat Belt Warning Light)**
   (a) Check the operation.
      (1) Apply battery voltage to the terminals and check that the indicator illuminates.
      Standard

Condition	Standard
Positive battery - Terminal 1 (IG+) Negative battery - Terminal 16 (PBEW) and 20 (GND)	Illuminates

If the result is not as specified, replace the integration control panel..

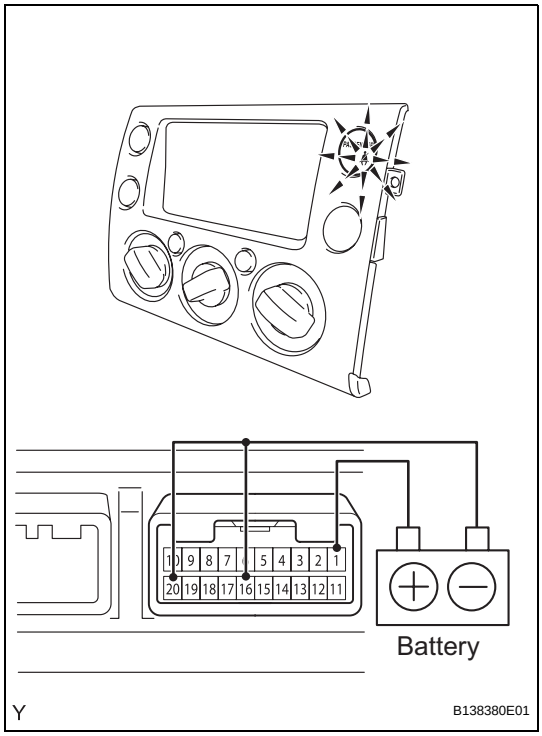

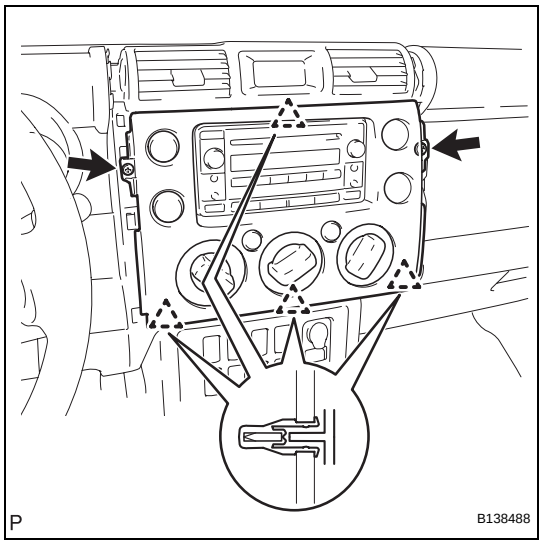

INSTALLATION

1. **INSTALL INTEGRATION CONTROL PANEL ASSEMBLY (Built-in Front Passenger Seat Belt Warning Light)**
   (a) Connect the blower switch connector and the 2 air conditioner amplifier connectors.
   (b) Engage the 4 clips and install the front passenger seat belt warning light.
   (c) Tighten the 2 screws.
2. **INSTALL INSTRUMENT PANEL GARNISH RH (See page IP-33)**
3. **INSTALL INSTRUMENT PANEL GARNISH LH (See page IP-33)**
4. **CONNECT CABLE TO NEGATIVE BATTERY TERMINAL**
   Torque: 3.9 N*m (40 kgf*cm, 35 in.*lbf)

SEAT BELT TENSION REDUCER

PARTS LOCATION

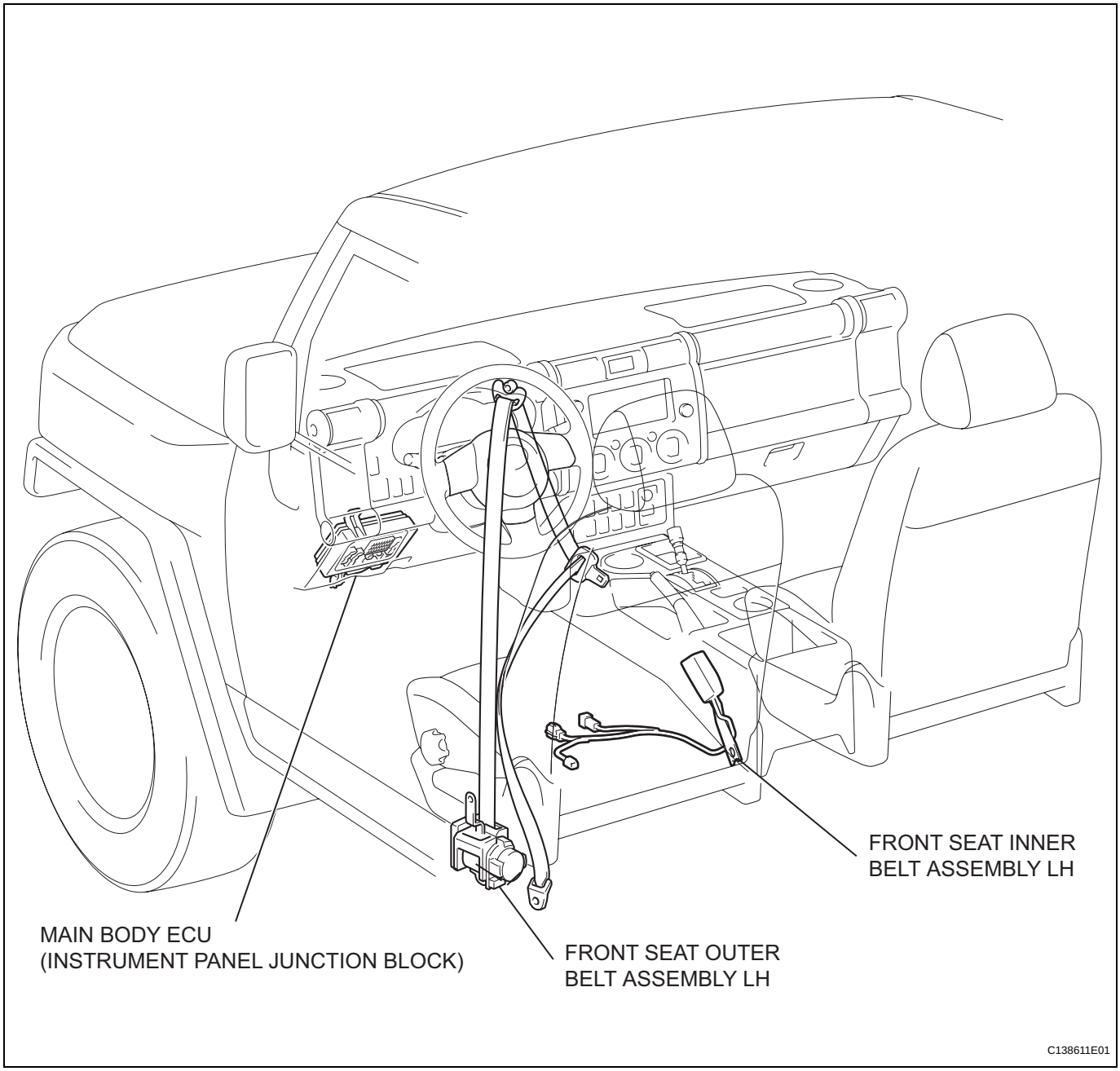

SYSTEM DIAGRAM

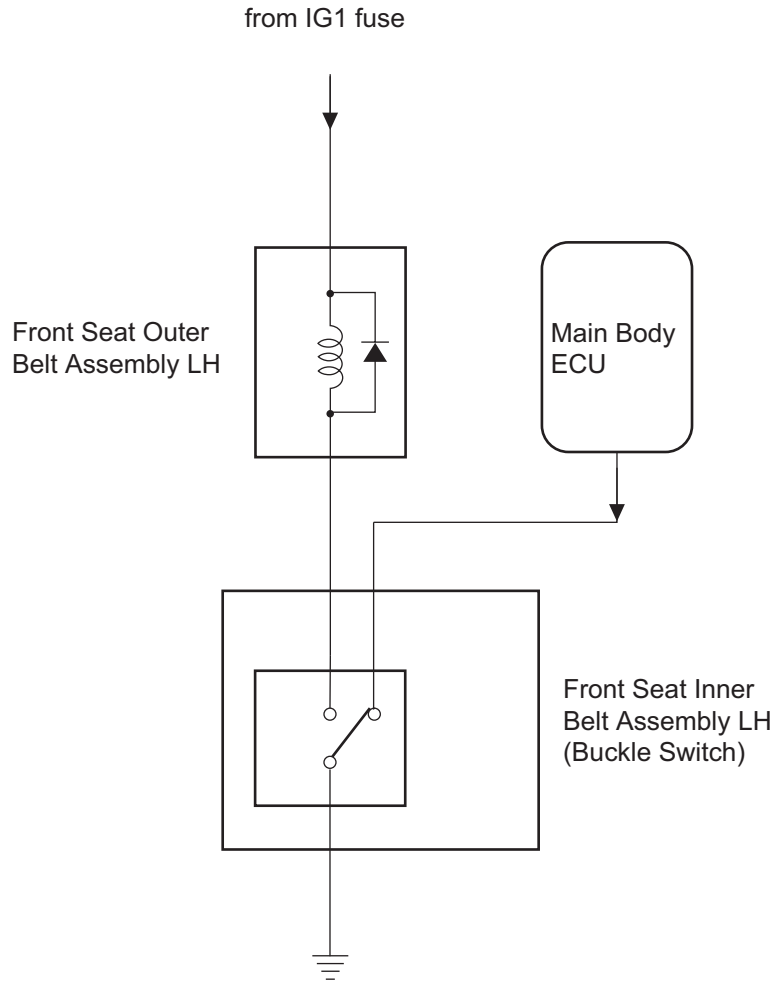

H

C138616E01

SB

SYSTEM DESCRIPTION

The seat belt tension reducer is fitted to the front seat belt LH. This mechanism can help reduce the belt tension applied to the occupant in the front seat when the seat belt is fastened.

PROBLEM SYMPTOMS TABLE

Seat Belt Tension Reducer

Symptom	Suspected area	See page
Driver side tension reducer does not operate	1. Front seat inner belt assembly (Driver side)	SB-32
	2. Front seat outer belt assembly (Driver side)	SB-38
	3. Wire harness	-

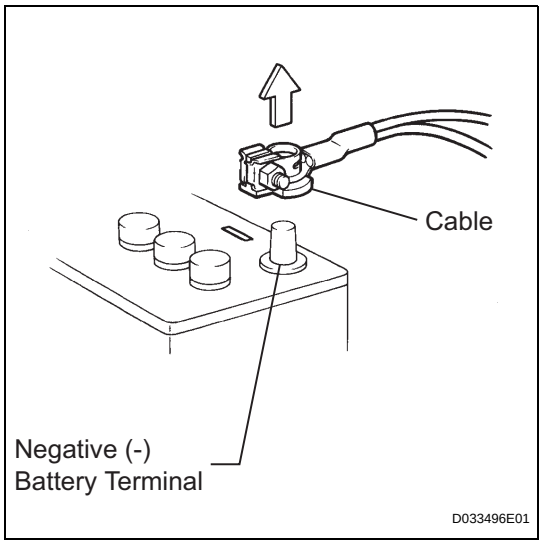

SEAT BELT WARNING SYSTEM

PRECAUTION

1. DISCONNECT AND RECONNECT CABLE OF NEGATIVE BATTERY TERMINAL

(a) Before performing electronic work, disconnect the cable from the negative (-) battery terminal in order to prevent it from shorting and burning out.

(b) When disconnecting and reconnecting the battery cable, turn the ignition switch OFF and headlight dimmer switch OFF. Then loosen the terminal nut completely. Be careful not to damage the cable or terminal.

(c) When the battery cable is disconnected, the settings of the clock and radio, memory of DTCs, etc. are erased. Before disconnecting the battery cable, take notes of the settings and memory.

NOTICE:

When disconnecting the cable from the negative (-) battery terminal, initialize the following system(s) after the cable is reconnected.

System Name	See procedure
Meter / gauge system	See page ME-10

SB

PARTS LOCATION

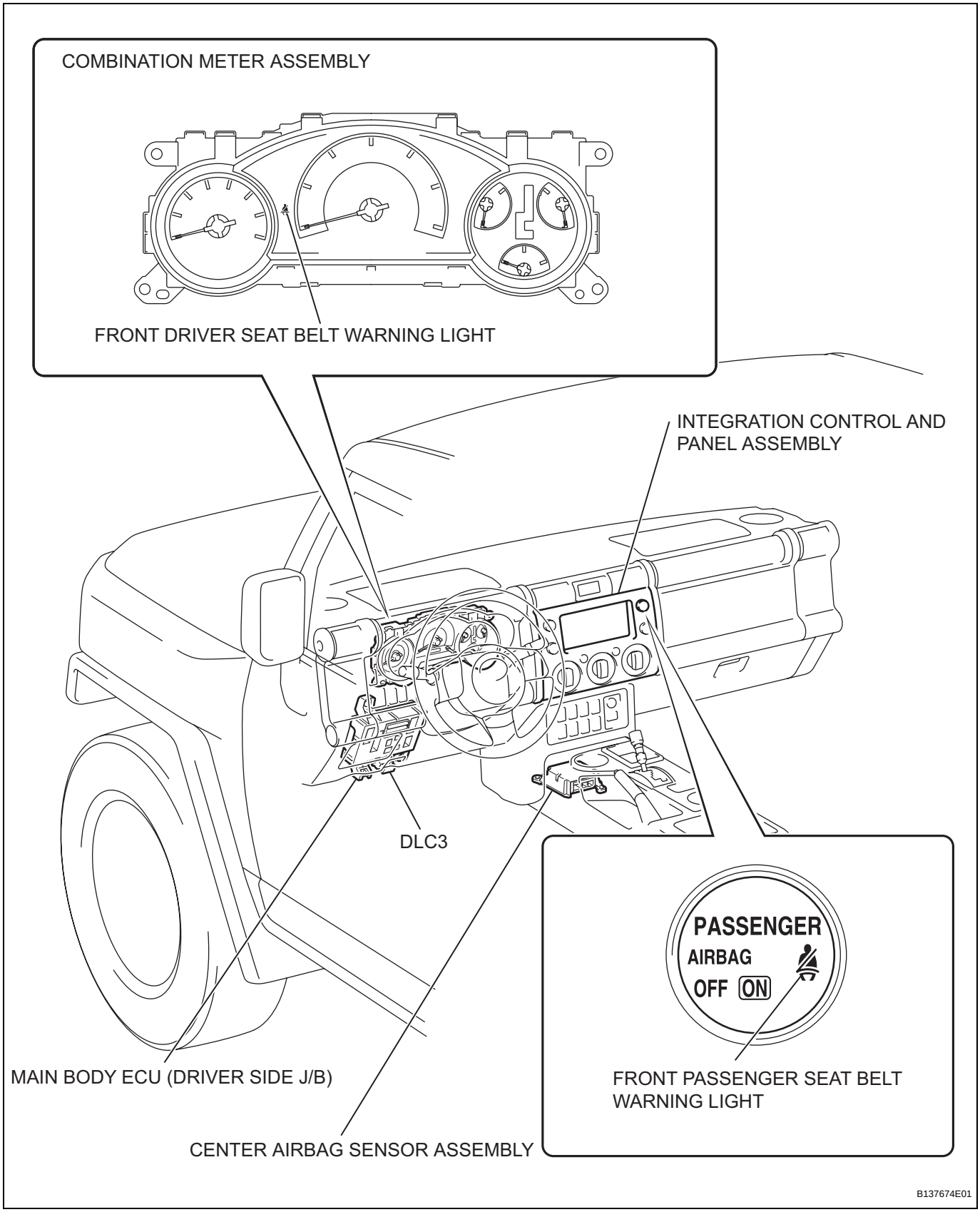

SB

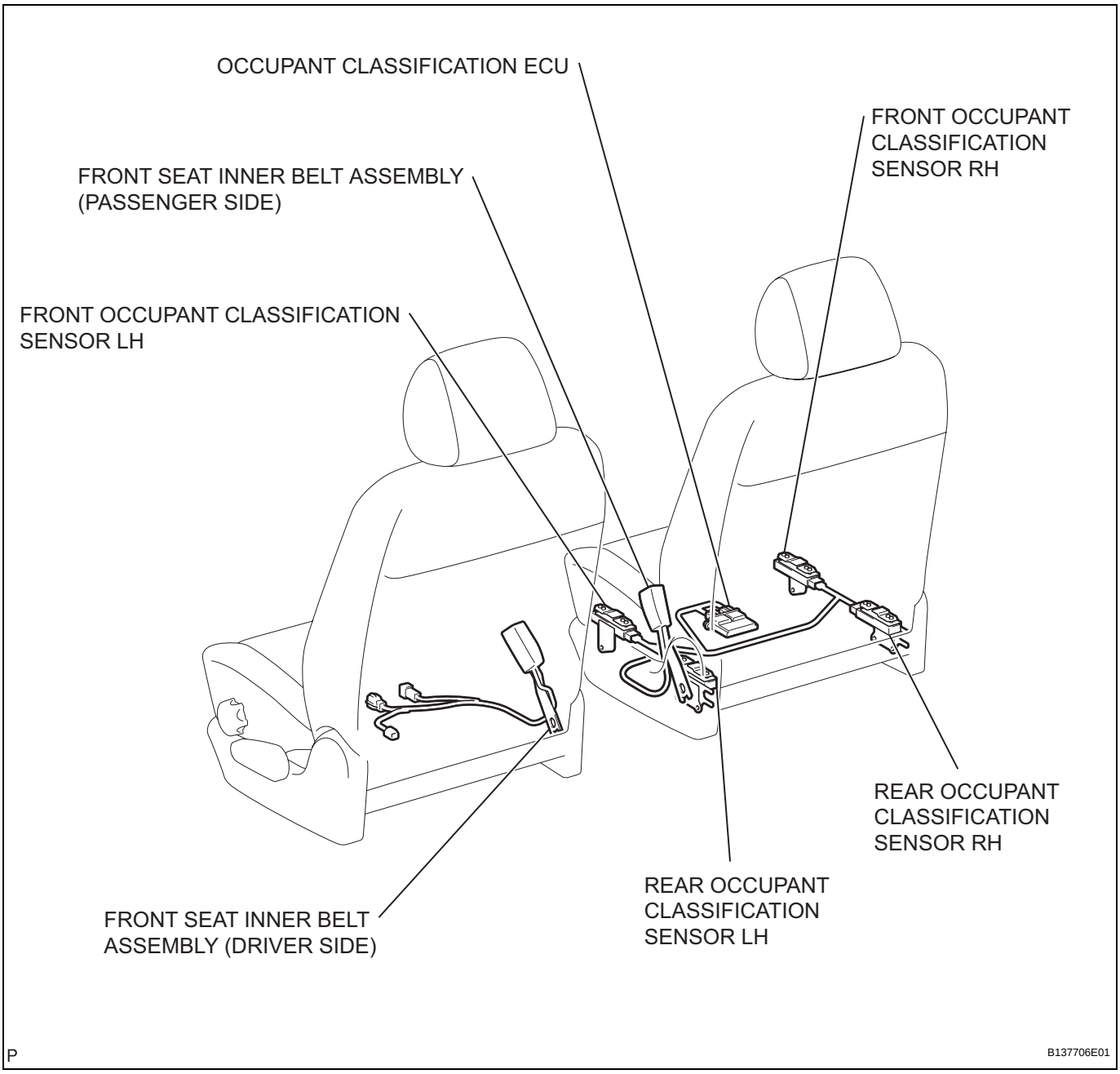
OCCUPANT CLASSIFICATION ECU
FRONT OCCUPANT CLASSIFICATION SENSOR RH
FRONT SEAT INNER BELT ASSEMBLY (PASSENGER SIDE)
FRONT OCCUPANT CLASSIFICATION SENSOR LH
REAR OCCUPANT CLASSIFICATION SENSOR RH
REAR OCCUPANT CLASSIFICATION SENSOR LH
FRONT SEAT INNER BELT ASSEMBLY (DRIVER SIDE)
P
B137706E01

SB

SYSTEM DIAGRAM

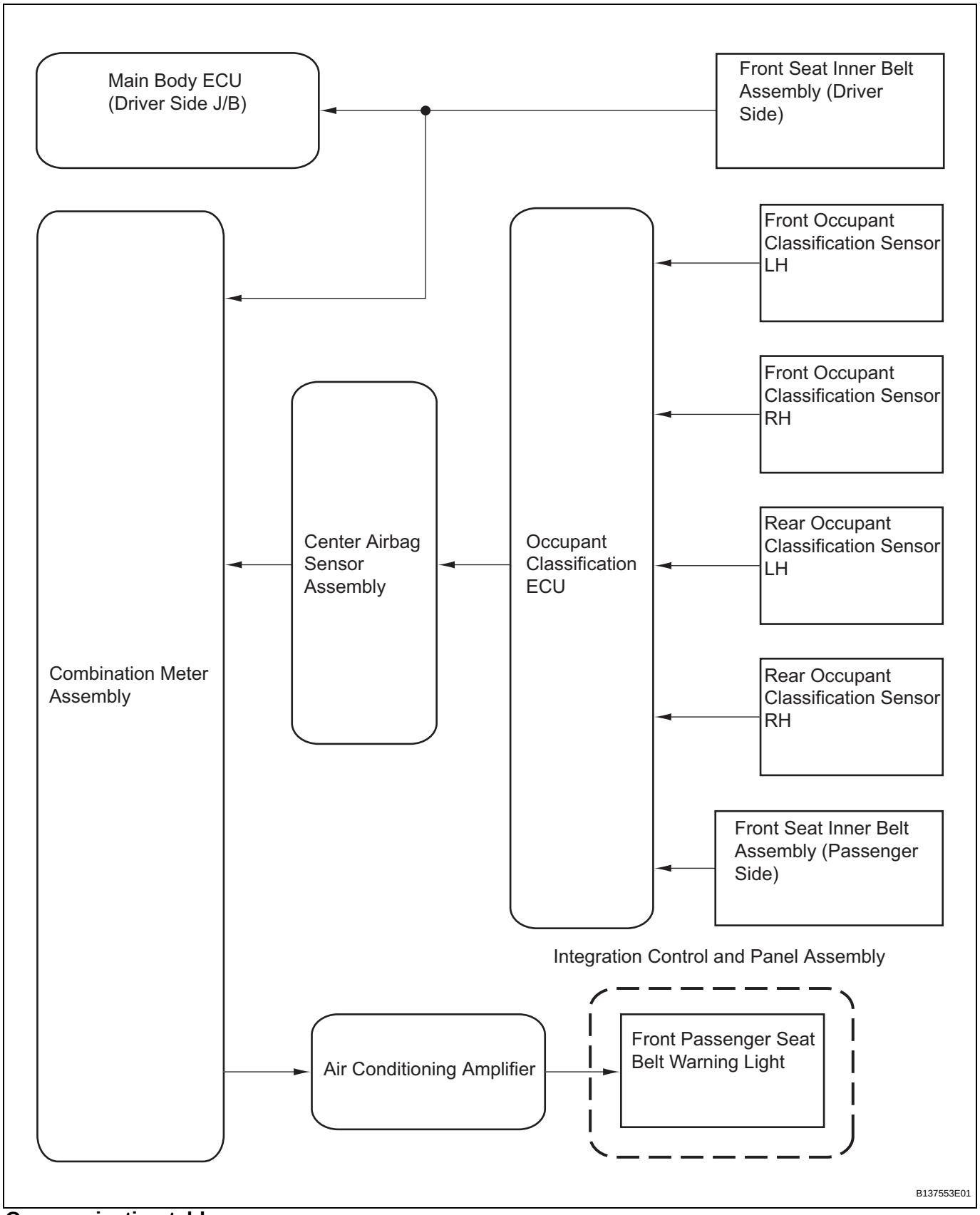

Communication table:

Sender	Receiver	Signal	Line
Center airbag sensor assembly	Combination meter assembly	Front seat inner belt switch signal (passenger side)	CAN communication line

SYSTEM DESCRIPTION

1. SEAT BELT WARNING SYSTEM DESCRIPTION

If a seat belt is not fastened, this system flashes the seat belt warning light and sounds the seat belt warning buzzer as a reminder.

2. FUNCTIONS OF MAIN COMPONENTS

Components	Function
Front Seat Inner Belt Assembly (Driver Side)	Informs combination meter assembly of driver seat belt condition (fastened or unfastened)
Front Seat Inner Belt Assembly (Passenger Side)	Informs occupant classification ECU of front passenger seat belt condition (fastened or unfastened)
Occupant Classification ECU	Informs center airbag sensor assembly of front passenger seat condition (occupied or unoccupied) Informs center airbag sensor assembly of front passenger seat belt condition (fastened or unfastened)
Occupant Classification Sensor	Informs occupant classification ECU of front passenger seat condition
Center Airbag Sensor Assembly	Informs combination meter assembly of front passenger seat belt condition (fastened or unfastened)
Combination Meter Assembly	The combination meter assembly transmits the passenger seat belt warning light signal to the integration control and panel assembly through the air conditioning amplifier.
Front Driver Seat Belt Warning Light	If driver seat belt is unfastened and ignition switch is ON, combination meter assembly flashes seat belt warning light of combination meter assembly as reminder
Front Passenger Seat Belt Warning Light	When front passenger seat is occupied and ignition switch is ON, if passenger seat belt is unfastened, combination meter assembly flashes seat belt warning light of integration control and panel assembly as reminder
Seat Belt Warning Buzzer for Driver Side and Passenger Side	If driver or passenger seat belt is unfastened and ignition switch is ON combination meter assembly sounds buzzer as reminder

3. SYSTEM OPERATION

- When the ignition switch is ON, this system detects the condition of the seat belts based on signals from the front seat inner belt switches (for driver and front passenger seats) and the occupant classification sensor (front passenger side only).

SB

HOW TO PROCEED WITH TROUBLESHOOTING

HINT:

- Use these procedures to troubleshoot the seat belt warning system.

1 VEHICLE BROUGHT TO WORKSHOP

NEXT

2 INSPECT BATTERY VOLTAGE

Standard voltage:

11 to 14 V

If the voltage is below 11 V, recharge or replace the battery before proceeding.

NEXT

3 PROBLEM SYMPTOMS TABLE

Result:

Result	Proceed to
Fault is not listed in problem symptoms table	A
Fault is listed in problem symptoms table	B

B → **GO TO STEP 5**

A

4 OVERALL ANALYSIS AND TROUBLESHOOTING

(a) DATA LIST / ACTIVE TEST (see page SB-20)

(b) Terminals of ECU (see page SB-12)

NEXT

5 REPAIR OR REPLACE

NEXT

SB

6	**CONFIRMATION TEST**

NEXT

END

PROBLEM SYMPTOMS TABLE

HINT:
Use the table below to help determine the causes of the problem symptom. The potential causes of the symptoms are listed in order of probability in the "Suspected Area" column of the table. Check each symptom by checking the suspected areas in the order they are listed. Replace parts as necessary.

Seat belt warning system

Symptom	Suspected area	See page
Front driver seat belt warning light does not operate	Front seat inner belt assembly (Driver side)	SB-32
	Wire harness	SB-22
	Combination meter assembly	SB-22
Front passenger seat belt warning light does not operate	Front seat inner belt assembly (Passenger side)	SB-25
	Wire harness	SB-25
	Occupant classification ECU	SB-25
	Center airbag sensor assembly	SB-25
	Combination meter assembly	SB-25
	Air conditioning amplifier	-
	Integration control and panel assembly (Front passenger seat belt warning light)	SB-2
Seat belt warning buzzer does not sound (Front driver and front passenger seat belt warning lights operate normally)	Combination meter assembly	ME-15

TERMINALS OF ECU

1. COMBINATION METER ASSEMBLY

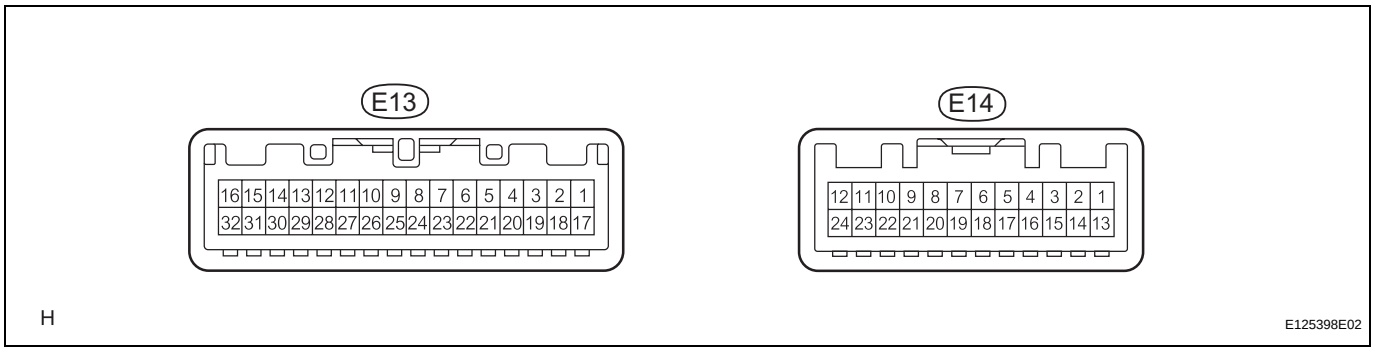

(a) Disconnect the E13 combination meter assembly connector.

(b) Measure the voltage and resistance of the wire harness side connector.

SB

Standard:

Symbols (Terminals No.)	Wiring Color	Terminal Description	Condition	Specified Condition
E13-1 (B) - Body ground	R - Body ground	Battery	Always	11 to 14 V
E13-2 (IG+) - Body ground	R-L - Body ground	Ignition switch signal	Ignition switch OFF → ON	Below 1 V → 11 to 14 V
E13-21 (ES) - Body ground	W-B - Body ground	Ground	Always	Below 1 Ω

If the result is not as specified, there may be a malfunction in the wire harness.

(c) Reconnect the combination meter assembly connector.

(d) Measure the voltage of the wire harness side connector.

Standard:

Symbols (Terminal No.)	Wiring Color	Terminal Description	Condition	Specified Condition
E13-7 (WRNP) - Body ground	LG - Body ground	Seat belt warning light signal (Front passenger side)	Ignition switch ON Front passenger seat is occupied and its seat belt is unfastened	Alternating between 11 to 14 V and below 3 V
E13-7 (WRNP) - Body ground	LG - Body ground	Seat belt warning light signal (Front passenger side)	Ignition switch ON Front passenger seat is occupied and its seat belt is fastened	Below 1 V
E13-8 (L) - Body ground	G-Y - Body ground	Front seat inner belt signal (Front driver side)	Ignition switch ON Front seat belt is unfastened (Front driver side)	Below 1 V
E13-8 (L) - Body ground	G-Y - Body ground	Front seat inner belt signal (Front driver side)	Ignition switch ON Front seat belt is fastened (Front driver side)	9 to 14 V
E13-10 (PBKL) - Body ground	L-R - Body ground	Front seat inner belt signal (Front passenger side)	Ignition switch ON Front seat belt is unfastened (Front passenger side)	Below 1 V
E13-10 (PBKL) - Body ground	L-R - Body ground	Front seat inner belt signal (Front passenger side)	Ignition switch ON Front seat belt is fastened (Front passenger side)	8 to 14 V

If the result is not as specified, there may be a malfunction in the wire harness.

2. CENTER AIRBAG SENSOR ASSEMBLY

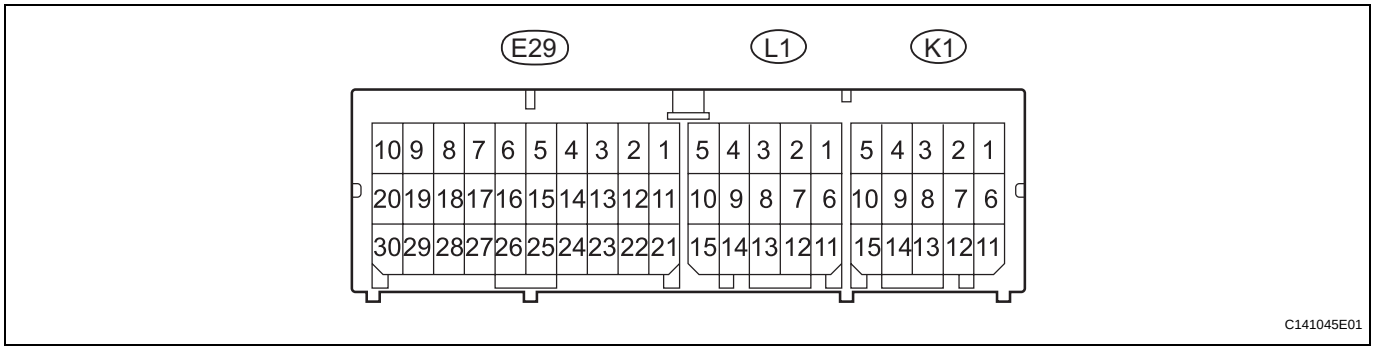

Terminal No.	Terminal Symbol	Destination
E29-13	PBEW	Combination meter assembly
E29-21	IG2	IGN fuse
E29-25	E1	Ground
K1-12	FSP+	Occupant Classification ECU
K1-13	FSP-	Occupant Classification ECU

SB

3. OCCUPANT CLASSIFICATION ECU

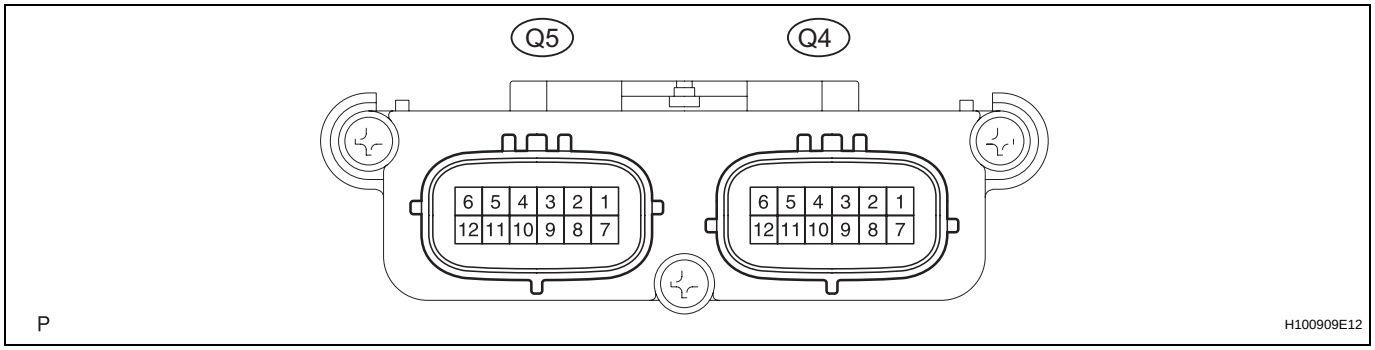

(a) Disconnect the Q4 occupant classification ECU connector.
(b) Measure the voltage and resistance of the wire harness side connector.

Standard:

Symbols (Terminals No.)	Wiring Color	Terminal Description	Condition	Specified Condition
Q4-1 (+B) - Body ground	W-R - Body ground	Battery	Always	11 to 14 V
Q4-3 (GND) - Body ground	W-B - Body ground	Ground	Always	Below 1 Ω
Q4-7 (IG) - Body ground	B-O - Body ground	Ignition switch signal	Ignition switch OFF → ON	Below 1 V → 11 to 14 V

If the result is not as specified, there may be a malfunction in the wire harness.
(c) Reconnect the occupant classification ECU connector.
(d) Measure the resistance of the wire harness side connector.

Standard:

Symbols (Terminal No.)	Wiring Color	Terminal Description	Condition	Specified Condition
Q4-4 (FSR-) - Q4-3 (GND)	B - W-B	Center airbag sensor assembly communication line (-)	Always	Below 1 Ω
Q4-5 (BGND) - Q4-3 (GND)	GR - W-B	Passenger side buckle switch ground line	Always	Below 1 Ω

Symbols (Terminal No.)	Wiring Color	Terminal Description	Condition	Specified Condition
Q4-8 (FSR+) - Q4-4 (FSR-)	W - B	Center airbag sensor assembly communication line	Ignition switch ON	Pulse generation
Q4-9 (BSW) - Q4-5 (BGND)	L - GR	Passenger side buckle switch line	Buckle switch ON Buckle switch OFF	Pulse generation

If the result is not as specified, there may be a malfunction in the wire harness.

4. MAIN BODY ECU (Driver Side J/B)

Main Body ECU (Driver Side J/B):

Left View:

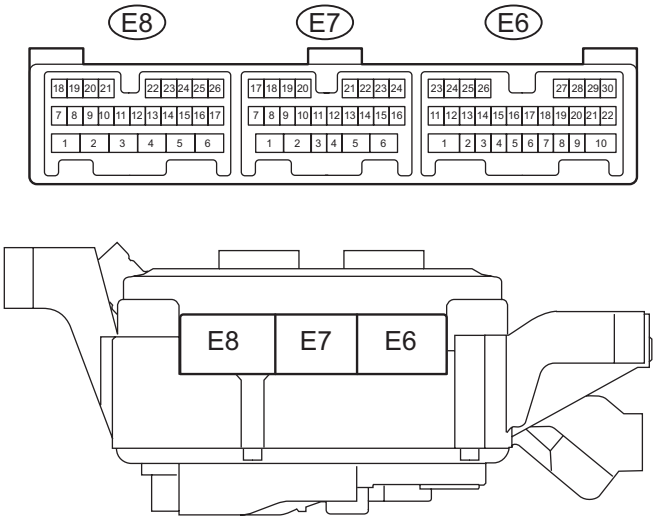

Rear View:

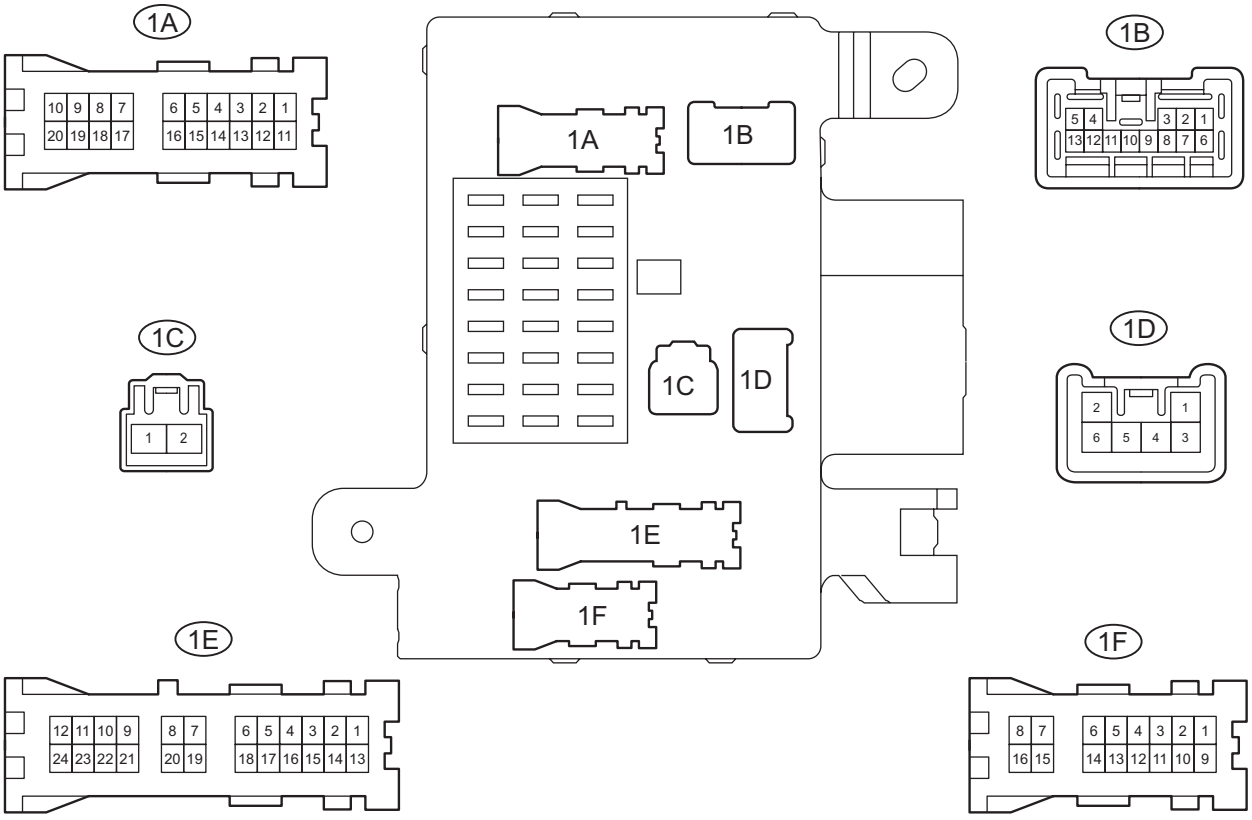

Y

B136051E03

Main Body ECU (Driver Side J/B):

Front View:

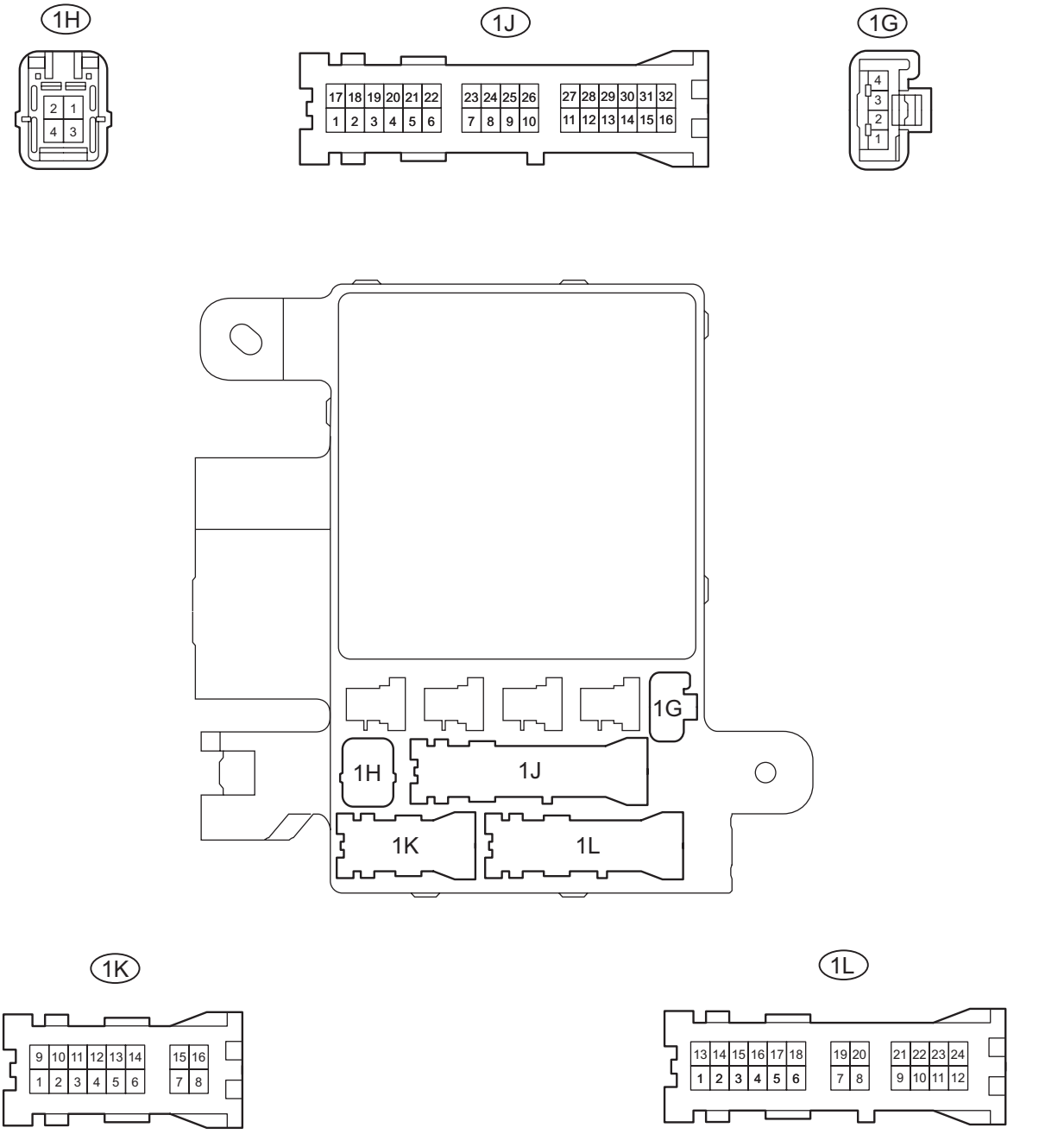

Y

B136052E03

(a) Disconnect the 1A, 1B and 1H main body ECU (driver side J/B) connectors.

(b) Measure the voltage and resistance of the wire harness side connectors.

Standard:

Symbols (Terminals No.)	Wiring Color	Terminal Description	Condition	Specified Condition
1B-4 (BECU) Body ground	W-R - Body ground	Power source circuit (From battery)	Always	11 to 14 V
1H-2 (GND1) - Body Ground	W-B - Body ground	Ground	Always	Below 1V
1A-7 (GND2) - Body ground	W - Body ground	Ground	Always	Below 1 Ω

If the result is not as specified, there may be a malfunction in the wire harness.

(c) Reconnect the main body ECU (driver side J/B) connectors.

(d) Measure the voltage of the wire harness side connectors.

Standard voltage:

Symbols (Terminals No.)	Wiring Color	Terminal Description	Condition	Specified Condition
1F-8 (SIG) - Body ground	B-R - Body ground	Ignition switch signal	Ignition switch OFF → ON	Below 1V → 11 to 14V
E6-13 (DBKL) - Body ground	G-Y - Body ground	Front seat inner belt signal (Front driver side)	Ignition switch ON Front seat belt is unfastened (Front driver side)	Below 1 V
E6-13 (DBKL) - Body ground	G-Y - Body ground	Front seat inner belt signal (Front driver side)	Ignition switch ON Front seat belt is fastened (Front driver side)	11 to 14 V

If the result is not as specified, there may be a malfunction in the wire harness.

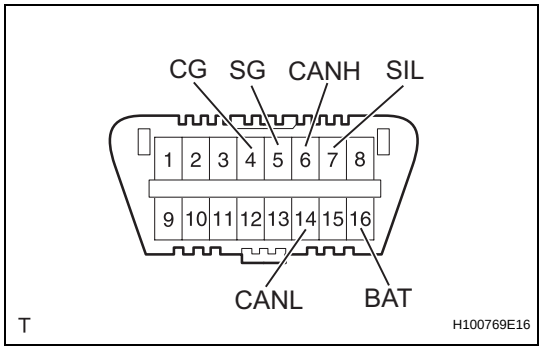

DIAGNOSIS SYSTEM

1. CHECK DLC3

(a) The ECU uses ISO 15765-4 for communication. The terminal arrangement of the DLC3 complies with ISO SAE J1962 and matches the ISO 15765-4 format.

Symbols (Terminal No.)	Terminal Description	Condition	Specified Condition
SIL (7) - SG (5)	Bus " +" line	During transmission	Pulse generation
CG (4) - Body ground	Chassis ground	Always	Below 1 Ω
SG (5) - Body ground	Signal ground	Always	Below 1 Ω
BAT (16) - Body ground	Battery positive	Always	11 to 14 V
CANH (6) - CANL (14)	CAN bus line	Ignition switch OFF*	54 to 69 Ω
CANH (6) - CG (4)	HIGH-level CAN bus line	Ignition switch OFF*	200 Ω or higher
CANL (14) - CG (4)	LOW-level CAN bus line	Ignition switch OFF*	200 Ω or higher
CANH (6) - BAT (16)	HIGH-level CAN bus line	Ignition switch OFF*	6 kΩ or higher
CANL (14) - BAT (16)	LOW-level CAN bus line	Ignition switch OFF*	6 kΩ or higher

NOTICE:

***: Before measuring the resistance, leave the vehicle as is for at least 1 minute and do not operate the ignition switch, any other switches or the doors.**

If the result is not as specified, the DLC3 may have a malfunction. Repair or replace the harness and connector.

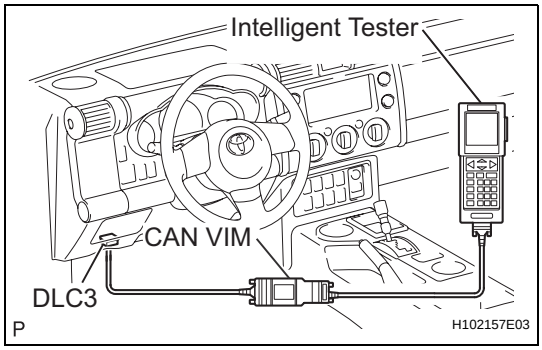

HINT:
Connect the cable of the intelligent tester to the CAN VIM, connect the CAN VIM to the DLC3, turn the ignition switch ON and attempt to use the tester. If the display indicates that a communication error has occurred, there is a problem either with the vehicle or with the tester.

- If communication is normal when the tester is connected to another vehicle, inspect the DLC3 of the original vehicle.
- If communication is still not possible when the tester is connected to another vehicle, the problem is probably in the tester itself. Consult the Service Department listed in the tester's instruction manual.

2. INSPECT BATTERY VOLTAGE

Standard voltage:

11 to 14 V

If the voltage is below 11 V, recharge or replace the battery before proceeding.

3. INSPECT FRONT DRIVER SEAT BELT WARNING LIGHT

(a) Turn the ignition switch ON.
(b) When the driver seat belt is not fastened, check that the combination meter assembly driver seat belt warning light blinks.
(c) When the seat belt is fastened, check that the combination meter assembly driver seat belt warning light turns off.

4. INSPECT FRONT PASSENGER SEAT BELT WARNING LIGHT

(a) Turn the ignition switch ON.
(b) When the front passenger seat is occupied, but the seat belt is not fastened, check that the front passenger seat belt warning light on the integration control and panel assembly blinks.
(c) When the front passenger seat belt is fastened, check that the front passenger seat belt warning light turns off.

5. INSPECT SEAT BELT WARNING BUZZER USING DRIVER SEAT BELT

(a) Turn the ignition switch ON.
(b) When the driver seat belt is not fastened within 1.8 seconds of the ignition switch being turned ON, check that the seat belt warning buzzer sounds at 1.2 second intervals for 6 seconds.
(c) When the driver seat belt is not fastened within 13.8 seconds of the ignition switch being turned ON and the vehicle speed reaches 12.4 mph (20 km/h) or more, check that the buzzer sounds at 1.2 second intervals for 9.6 seconds.
(d) After the buzzer has sounded for 9.6 seconds, check that the buzzer sounds at 0.4 second intervals for a further 20 seconds.

SB

(e) When 29.6 seconds have elapsed since the buzzer started sounding in step (c) above, check that the buzzer stops sounding.
(f) After the buzzer has stopped sounding, turn the ignition switch OFF and then start the engine again. With the driver seat belt unfastened, drive the vehicle at 12.4 mph (20 km/h) or more. Check that the buzzer sounds.
(g) After the buzzer has stopped sounding, fasten the driver seat belt, drive the vehicle at 12.4 mph (20 km/h) or more, and then unfasten the seat belt. Check that the buzzer sounds.
(h) After the buzzer has stopped sounding, move the shift lever to R. Then move the shift lever to D (for A/T only). With the driver seat belt unfastened, drive the vehicle at 12.4 mph (20km/h) or more. Check that the buzzer sounds.

6. INSPECT SEAT BELT WARNING BUZZER USING FRONT PASSENGER SEAT BELT

HINT:
If the following inspection is conducted by one person, since the front passenger seat belt warning buzzer function uses signals from the occupant classification sensors, place an object with a weight of 36 kg (79.37 lb) or more on the front passenger seat.

(a) Turn the ignition switch ON.
(b) When the front passenger seat belt is not fastened within 1.8 seconds of the ignition switch being turned ON, check that the seat belt warning buzzer sounds at 1.2 second intervals for 6 seconds.
(c) When the front passenger seat belt is not fastened within 13.8 seconds of the ignition switch being turned ON and the vehicle speed reaches 12.4 mph (20 km/h) or more, check that the buzzer sounds at 1.2 second intervals for 9.6 seconds.
(d) After the buzzer has sounded for 9.6 seconds, check that the buzzer sounds at 0.4 second intervals for a further 20 seconds.
(e) When 29.6 seconds have elapsed since the buzzer started sounding in step (c) above, check that the buzzer stops sounding.
(f) After the buzzer has stopped sounding, turn the ignition switch OFF and then start the engine again. With the front passenger seat belt unfastened, drive the vehicle at 12.4 mph (20 km/h) or more. Check that the buzzer sounds.
(g) After the buzzer has stopped sounding, fasten the front passenger seat belt, drive the vehicle at 12.4 mph (20 km/h) or more, and then unfasten the front passenger seat belt. Check that the buzzer sounds.

(h) After the buzzer has stopped sounding, move the shift lever to R. Then move the shift lever to D. With the front passenger seat belt unfastened, drive the vehicle at 12.4 mph (20km/h) or more. Check that the buzzer sounds.

DATA LIST / ACTIVE TEST

1. READ DATA LIST

HINT:

By accessing the DATA LIST using the intelligent tester, values of the switches and sensors can be read without removing any parts. Reading the DATA LIST is the first step of troubleshooting and is one method of shortening labor time.

(a) Connect the intelligent tester with the CAN VIM to the DLC3.

(b) Turn the ignition switch ON and turn the tester ON.

(c) Enter the DATA LIST by following the prompts displayed on the tester screen.

Center Airbag Sensor Assembly

Item	Measurement Item/ Range (Display)	Normal Condition	Diagnostic Note
D BUCKLE SW	Buckle switch (Driver side)/ UNSET: Seat belt not fastened SET: Seat belt fastened NG: Data not determined	UNSET/SET	-
P BUCKLE SW	Buckle switch (Front passenger side)/ UNSET: Seat belt not fastened SET: Seat belt fastened NG: Data not determined	UNSET/SET	-
PASSENGER CLASS	Front passenger classification/ NG: Data is not determined OFF: Vacant CHILD: Child (Less than 36 kg [79.37 lb]) seated AF05: Adult (36 to 54 kg [79.37 to 119.05 lb]) seated AM50: Adult (More than 54 kg [119.05 lb]) seated FAIL: Failure detected	NG/OFF/CHILD/AF05/AM50/ FAIL	-

Occupant Classification ECU

Item	Measurement Item/ Range (Display)	Normal Condition	Diagnostic Note
P BUCKLE SW	Buckle switch (Front passenger side)/ UNSET: Front passenger side seat belt is unfastened SET: Front passenger side seat belt is fastened NG: Front passenger side seat belt is malfunctioning	UNSET/SET	-
PASSENGER CLASS	Front passenger classification/ AM50: Adult (more than 54 kg (119.05 lb)) is seated AF05: Adult (36 to 54 kg (79.37 to 119.05 lb)) is seated CHILD: Child (less than 36 kg (79.37 lb)) is seated CRS: Child restraint system (less than 7 kg (15.43 lb)) and front passenger side buckle switch ON, then 7 to 36 kg (15.43 to 79.37 lb) is set OFF: Vacant	AF05/AM50/CHILD/CRS/OFF	-

SB

Main Body ECU (Driver Side J/B)

Item	Measurement Item/ Range (Display)	Normal Condition	Diagnostic Note
D SEAT BUCKL SW	Buckle switch (Driver side)/ ON: Seat belt fastened OFF: Seat belt not fastened	ON/OFF	-

Driver Side Seat Belt Warning Light does not Operate

DESCRIPTION

When the ignition switch is ON, the combination meter assembly receives signals from the front seat inner belt assembly (driver side). When the seat belt is unfastened, the combination meter assembly flashes the driver seat belt warning light in the combination meter assembly. When the seat belt is fastened, the combination meter assembly stops flashing the front driver seat belt warning light.

WIRING DIAGRAM

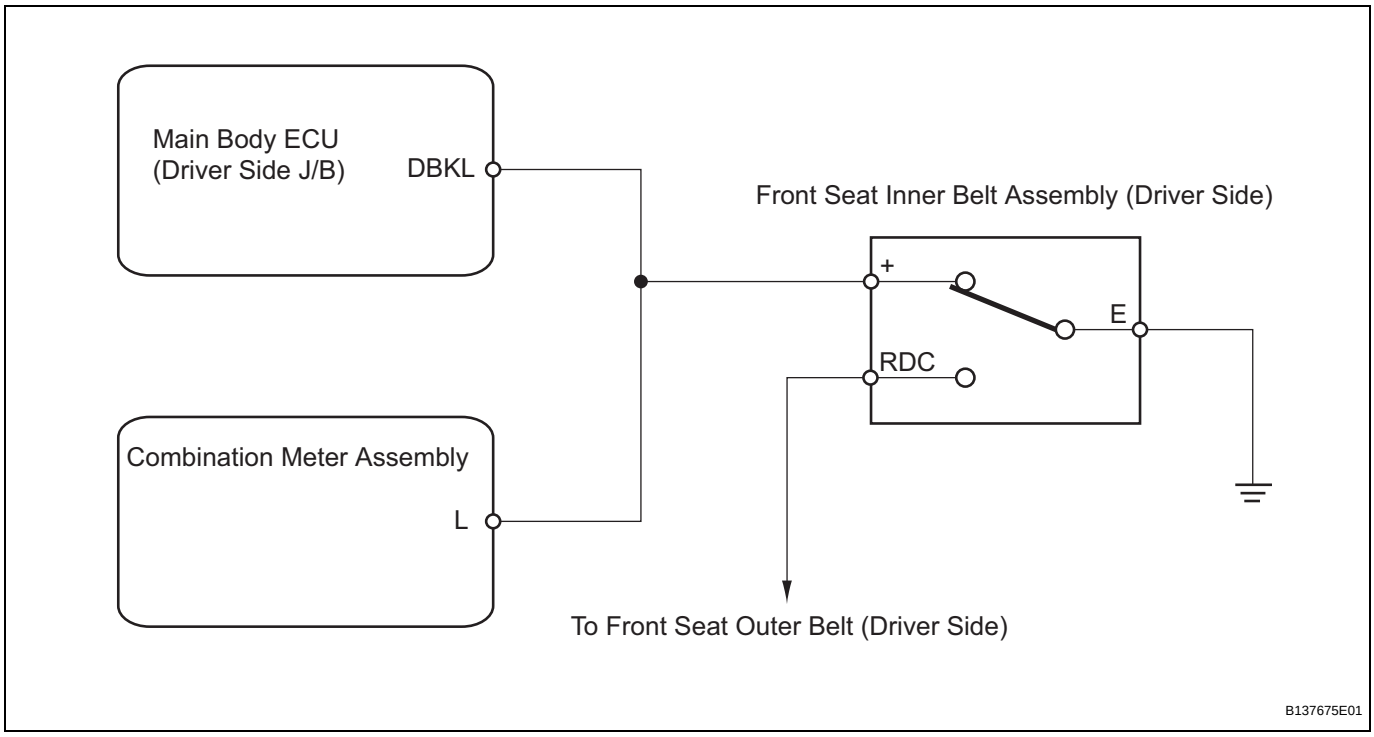

INSPECTION PROCEDURE

1	READ VALUE OF INTELLIGENT TESTER (D SEAT BUCKL SW)

(a) Connect the intelligent tester with the CAN VIM to the DLC3.
(b) Turn the ignition switch ON and turn the tester ON.
(c) Enter the following menus: OBD/MOBD / BODY / DATA LIST

Main Body ECU (Driver Side J/B)

Item	Measurement Item/ Range (Display)	Normal Condition	Diagnostic Note
D SEAT BUCKL SW	Buckle switch (Driver side)/ ON: Seat belt fastened OFF: Seat belt not fastened	ON/OFF	-

OK:

Front seat inner belt assembly (driver side) operates normally.

NG	Go to step 3

OK

2 CHECK HARNESS AND CONNECTOR (COMBINATION METER ASSEMBLY - FRONT SEAT INNER BELT ASSEMBLY)

Wire Haeness Side:

Front Seat Inner Belt Assembly (Driver Side) Connector

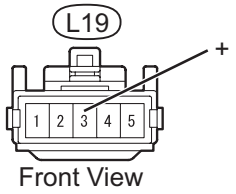

Front View

Combination Meter Assembly Connector

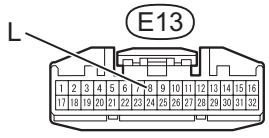

Front View

B137678E01

(a) Disconnect the E13 combination meter assembly connector.
(b) Disconnect the L19 front seat inner belt assembly (driver side) connector.
(c) Measure the resistance.
Standard resistance

Tester Connection	Specified Condition
E13-8 (L) - L19-3 (+)	Below 1 Ω
E13-8 (L) or L19-3 (+) - Body ground	10 kΩ or higher

(d) Reconnect the combination meter assembly connector.
(e) Reconnect the front seat inner belt assembly (driver side) connector.

NG → **REPAIR OR REPLACE HARNESS OR CONNECTOR**

OK

REPLACE COMBINATION METER ASSEMBLY

3 INSPECT FRONT SEAT INNER BELT ASSEMBLY (DRIVER SIDE)

Component Side:

Front Seat Inner Belt Assembly (Driver Side) Connector

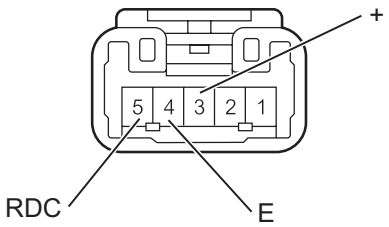

H

B137709E02

(a) Disconnect the L19 front seat inner belt assembly (driver side) connector.
(b) Measure the resistance.
Standard resistance

Tester Connection	Condition	Specified Condition
+ - E	Tongue plate fastened	10 kΩ or higher
RDC - E	Tongue plate unfastened	Below 1 Ω
+ - E	Tongue plate unfastened	Below 1 Ω
RDC - E	Tongue plate fastened	10 kΩ or higher

(c) Reconnect the front seat inner belt assembly (driver side) connector.

NG → **REPLACE FRONT SEAT INNER BELT ASSEMBLY (DRIVER SIDE)**

OK

4	**CHECK HARNESS AND CONNECTOR (MAIN BODY ECU - FRONT SEAT INNER BELT ASSEMBLY)**

Wire Harness Side:

Front Seat Inner Belt Assembly (Driver Side) Connector

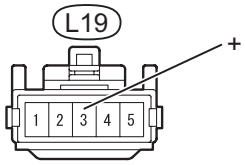

Front View

Main Body ECU (Driver Side J/B) Connector

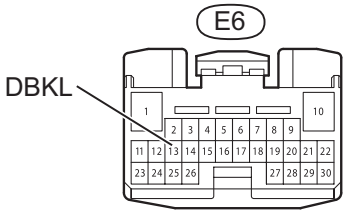

Front View

B137679E01

(a) Disconnect the E6 main body ECU (driver side J/B) connector.
(b) Disconnect the L19 front seat inner belt assembly (driver side) connector.
(c) Measure the resistance.
Standard resistance

Tester Connection	Specified Condition
E6-13 (DBKL) - L19-3 (+)	Below 1 Ω
E6-13 (DBKL) or L19-3 (+) - Body ground	10 kΩ or higher

(d) Reconnect the main body ECU (driver side J/B) connector.
(e) Reconnect the front seat inner belt assembly (driver side) connector.

NG → **REPAIR OR REPLACE HARNESS OR CONNECTOR**

OK

REPAIR OR REPLACE HARNESS OR CONNECTOR (FRONT SEAT INNER BELT ASSEMBLY - BODY GROUND)

SB

Front Passenger Side Seat Belt Warning Light Malfunction

DESCRIPTION

When the ignition switch is ON and the front passenger seat is occupied, the occupant classification ECU communicates the status of the front seat inner belt assembly (passenger side) to the center airbag sensor assembly. The combination meter assembly receives signals from the center airbag sensor assembly and transmits them to the integration control and panel assembly. When the seat belt is unfastened, the combination meter assembly flashes the front passenger seat belt warning light on the integration control and panel assembly. When the seat belt is fastened, the combination meter assembly stops flashing the front passenger seat belt warning light on the integration control and panel assembly.

WIRING DIAGRAM

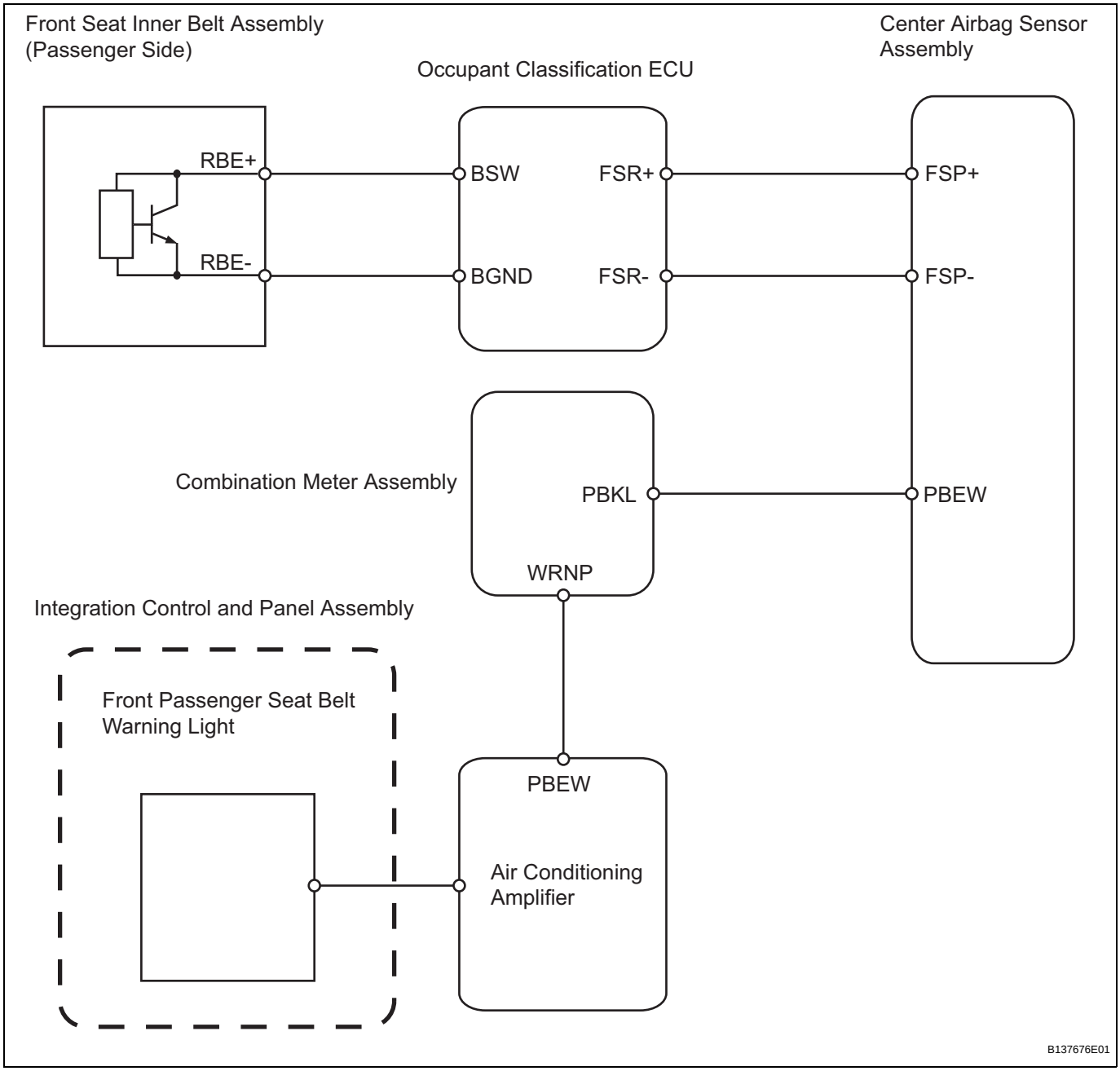

INSPECTION PROCEDURE

1	CHECK SUPPLEMENTAL RESTRAINT SYSTEM

(a) Connect the intelligent tester with the CAN VIM to the DLC3.
(b) Turn the ignition switch ON and turn the tester ON.
(c) Enter the following menus: DIAGNOSIS / SRS AIRBAG/ DTC INFO

Result

Result	Proceed to
No DTCs are output	A
DTCs are output	B

B → **GO TO SUPPLEMENTAL RESTRAINT SYSTEM**

A

2	CHECK OCCUPANT CLASSIFICATION SYSTEM

(a) Connect the intelligent tester with the CAN VIM to the DLC3.
(b) Turn the ignition switch ON and turn the tester ON.
(c) Enter the following menus: DIAGNOSIS / OCCUPANT DETECT / DTC INFO

Result

Result	Proceed to
No DTCs are output	A
DTCs are output	B

B → **GO TO OCCUPANT CLASSIFICATION SYSTEM**

A

3	CHECK HARNESS AND CONNECTOR (CENTER AIRBAG SENSOR ASSEMBLY - COMBINATION METER ASSEMBLY)

Wire Harness Side:

Center Airbag Sensor Assembly Connector

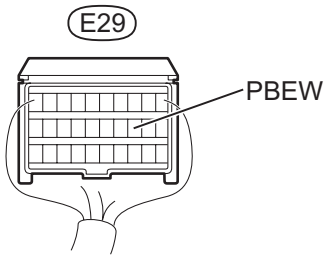

Combination Meter Assembly Connector

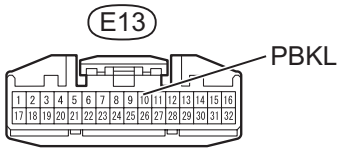

Front View

B137690E01

(a) Disconnect the E29 center airbag sensor assembly connector.
(b) Disconnect the E13 combination meter assembly connector.
(c) Measure the resistance.
Standard resistance

Tester Connection	Specified Condition
E29-13 (PBEW) - E13-10 (PBKL)	Below 1 Ω
E29-13 (PBEW) or E13-10 (PBKL) - Body ground	10 kΩ or higher

(d) Reconnect the center airbag sensor assembly connector.
(e) Reconnect the combination meter assembly connector.

NG → **REPAIR OR REPLACE HARNESS OR CONNECTOR**

OK

4	CHECK HARNESS AND CONNECTOR (COMBINATION METER ASSEMBLY - AIR CONDITIONING AMPLIFIER)

Wire Harness Side:

Combination Meter Assembly Connector

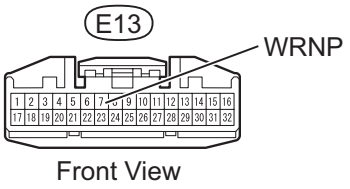

Front View

Air Conditioning Amplifier Connector

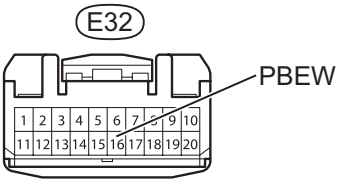

Front View

B137691E01

(a) Disconnect the E13 combination meter assembly connector.
(b) Disconnect the E32 air conditioning amplifier connector.
(c) Measure the resistance.
Standard resistance

Tester Connection	Specified Condition
E13-7 (WRNP) - E32-16 (PBEW)	Below 1 Ω
E13-7 (WRNP) or E32-16 (PBEW) - Body ground	10 kΩ or higher

(d) Reconnect the combination meter assembly connector.
(e) Reconnect the air conditioning amplifier connector.

NG → **REPAIR OR REPLACE HARNESS OR CONNECTOR**

SB

OK

5	INSPECT COMBINATION METER ASSEMBLY

Wire Harness Side:

Combination Meter Assembly Connector

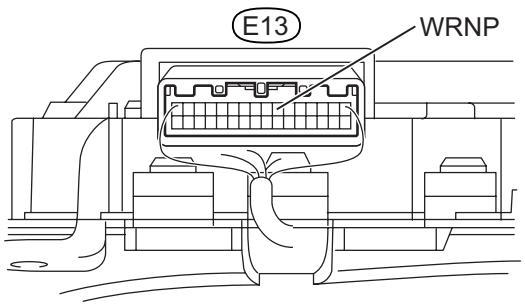

H B137707E01

(a) Measure the voltage.
Standard voltage

Tester Connection	Condition	Specified Condition
E13-7 (WRNP) - Body ground	Ignition switch ON Front passenger seat occupied	Alternating between 11 to 14 V and below 3 V

NG → **REPLACE COMBINATION METER ASSEMBLY**

OK

REPLACE INTEGRATION CONTROL AND PANEL ASSEMBLY

SB

FRONT SEAT INNER BELT ASSEMBLY

COMPONENTS

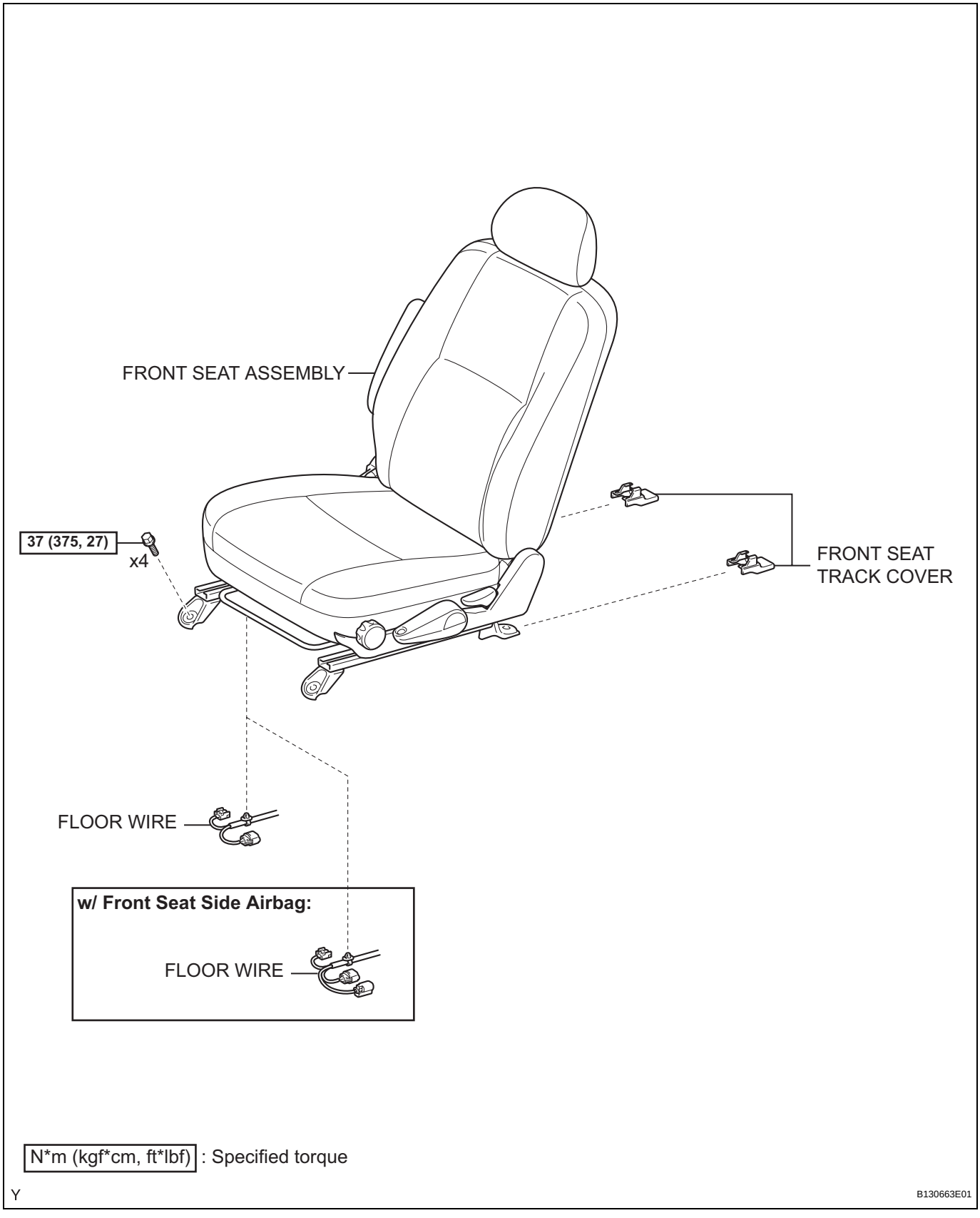

SB

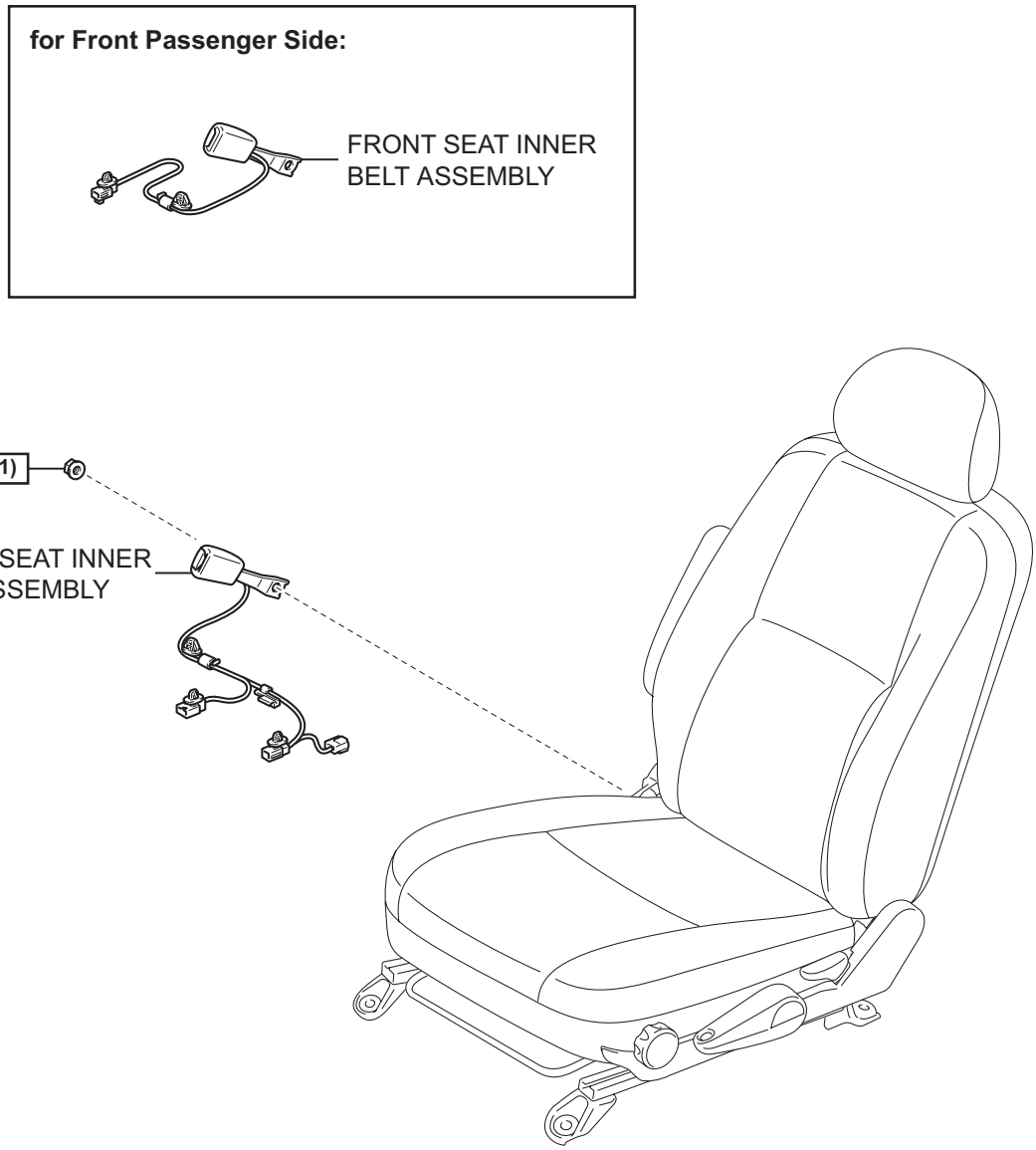

SB

N*m (kgf*cm, ft*lbf) : Specified torque

Y

B135156E01

REMOVAL

CAUTION:
Some of these service operations affect the SRS airbag system. Read the precautionary notices concerning the SRS airbag system before servicing (w/ Front Seat Side Airbag) (See page RS-1).

HINT:
The procedure described below is for the driver side. Use the same procedure for both the driver and front passenger sides, unless otherwise specified.

1. **DISCONNECT CABLE FROM NEGATIVE BATTERY TERMINAL**
   CAUTION:
   Wait for at least 90 seconds after disconnecting the cable to prevent the airbag from working (w/ Front Seat Side Airbag).
2. **REMOVE FRONT SEAT TRACK COVER (See page SE-5)**
3. **REMOVE FRONT SEAT ASSEMBLY (See page SE-6)**
4. **REMOVE FRONT SEAT INNER BELT ASSEMBLY**
   (a) for Driver Side:
   (1) Disconnect the seat position sensor connector.
   (2) Using a clip remover, remove the 2 connectors and the clamp.
   (3) Remove the clamp.

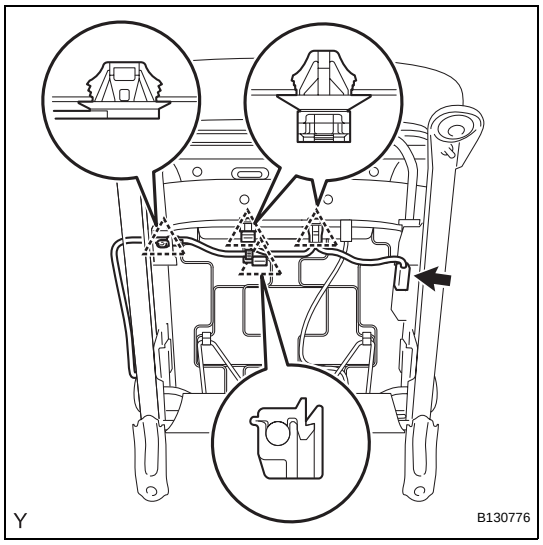

(b) for Front Passenger Side:
(1) Disconnect the buckle switch connector.
(2) Using a clip remover, remove the connector and the clamp.

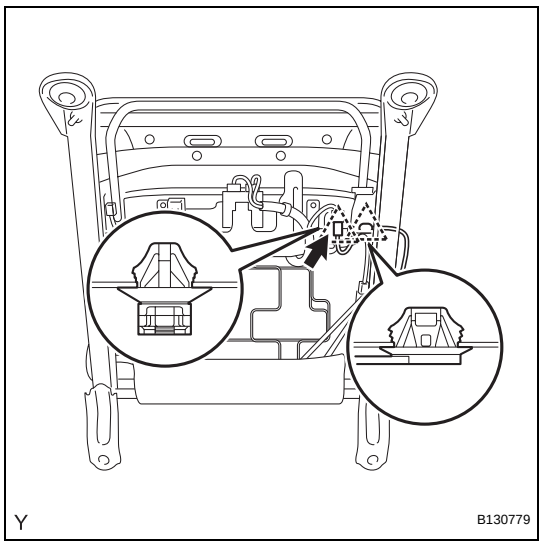

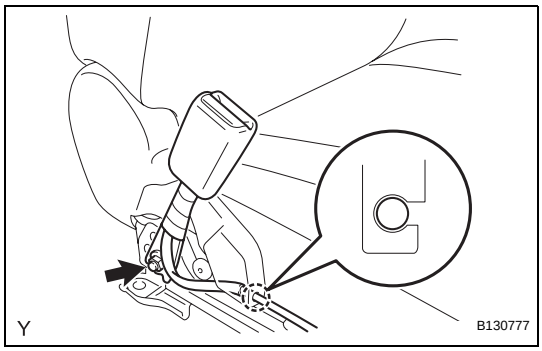

(c) Remove the wire harness from the claw of the front seat cushion inner shield.
(d) Remove the nut and the front seat inner belt.

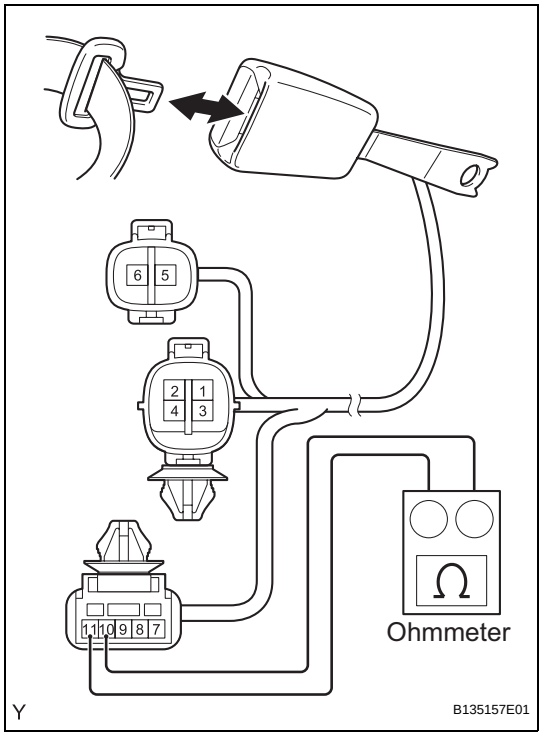

INSPECTION

1. INSPECT FRONT SEAT INNER BELT ASSEMBLY (for Driver Side)

(a) Check the resistance.
(1) Using an ohmmeter, measure the resistance between the terminals.

Standard resistance

Tester Connection	Condition	Specified Condition
10 - 11	Tongue plate fastened	Below 1 Ω
	Tongue plate released	10 kΩ or higher

If the result is not as specified, replace the front seat inner belt.

SB

INSTALLATION

CAUTION:
Some of these service operations affect the SRS airbag system. Read the precautionary notices concerning the SRS airbag system before servicing (w/ Front Seat Side Airbag) (See page RS-1).

HINT:
The procedure described below is for the driver side. Use the same procedure for both the driver and front passenger sides, unless otherwise specified.

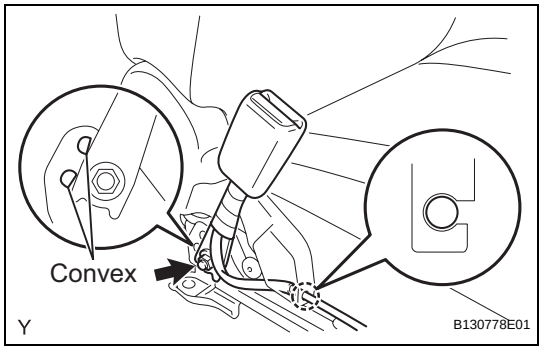

1. INSTALL FRONT SEAT INNER BELT ASSEMBLY

(a) Install the front seat inner belt with the bolt.
Torque: 42 N*m (430 kgf*cm, 31 ft.*lbf)
NOTICE:
Do not place the front seat inner belt over the convex areas of the front seat frame adjuster.

(b) Install the wire harness into the claw of the front seat cushion inner shield.

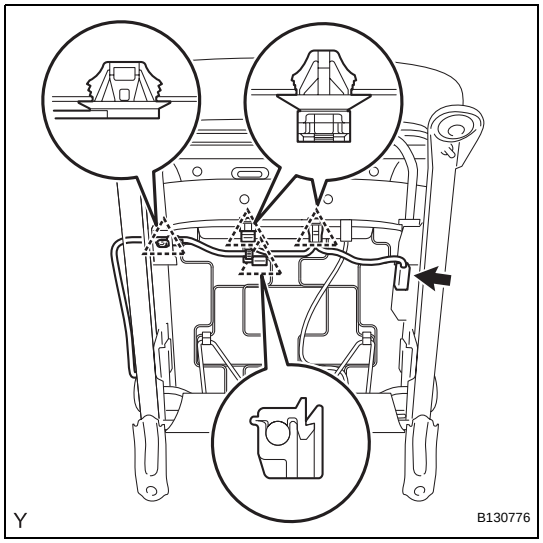

(c) for Driver Side:
(1) Install the 2 clamps and the 2 connectors.
(2) Connect the seat position sensor connector.

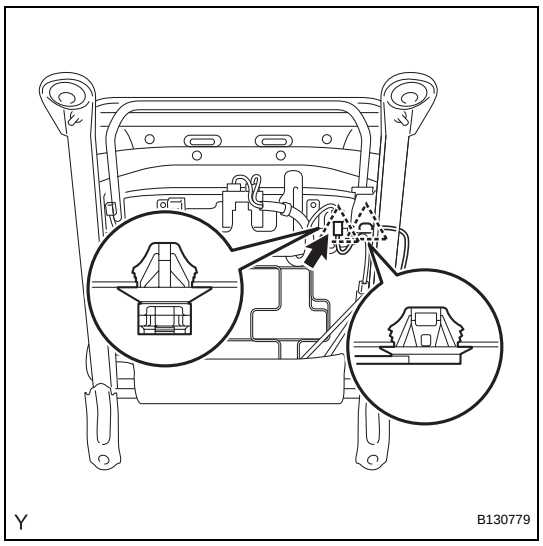

(d) for Front Passenger Side:
(1) Install the clamp and the connector.
(2) Connect the buckle switch connector.

2. INSTALL FRONT SEAT ASSEMBLY (See page SE-24)

3. INSTALL FRONT SEAT TRACK COVER (See page SE-25)

4. CONNECT CABLE TO NEGATIVE BATTERY TERMINAL
Torque: 3.9 N*m (40 kgf*cm, 35 in.*lbf)

5. INSPECT SRS WARNING LIGHT (w/ Front Seat Side Airbag)
(See page RS-29)

SB

FRONT SEAT OUTER BELT ASSEMBLY

COMPONENTS

SB

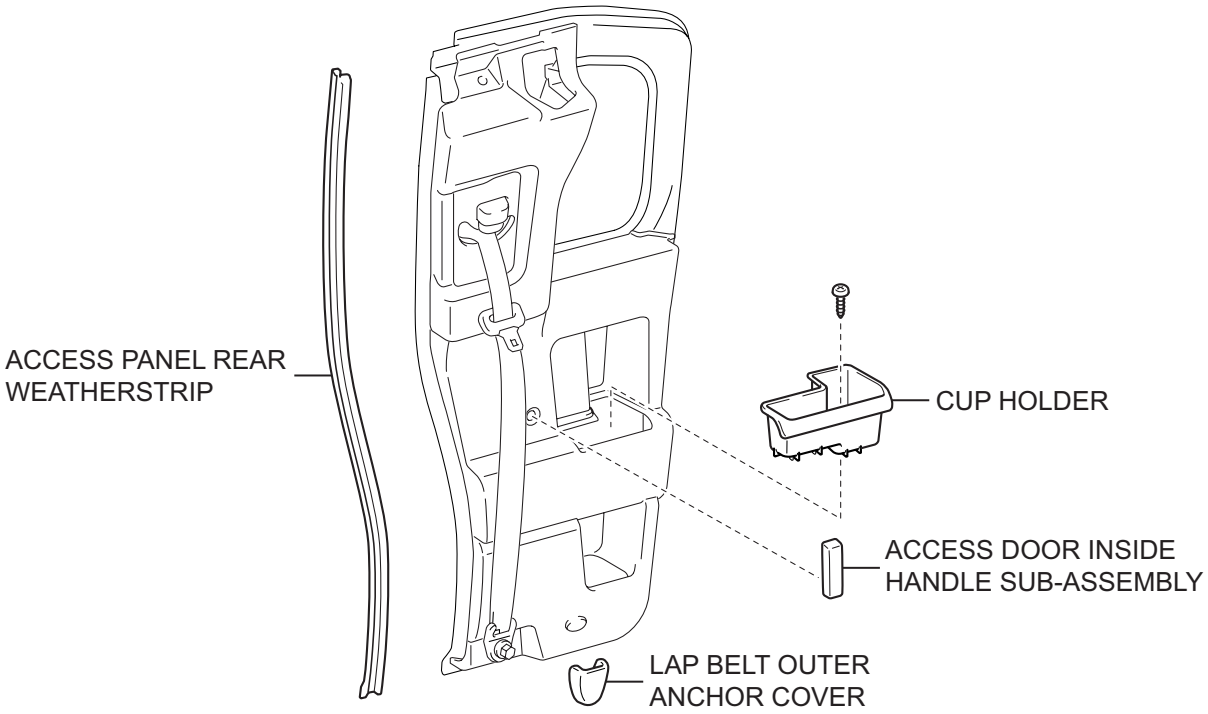

Y

B138387E01

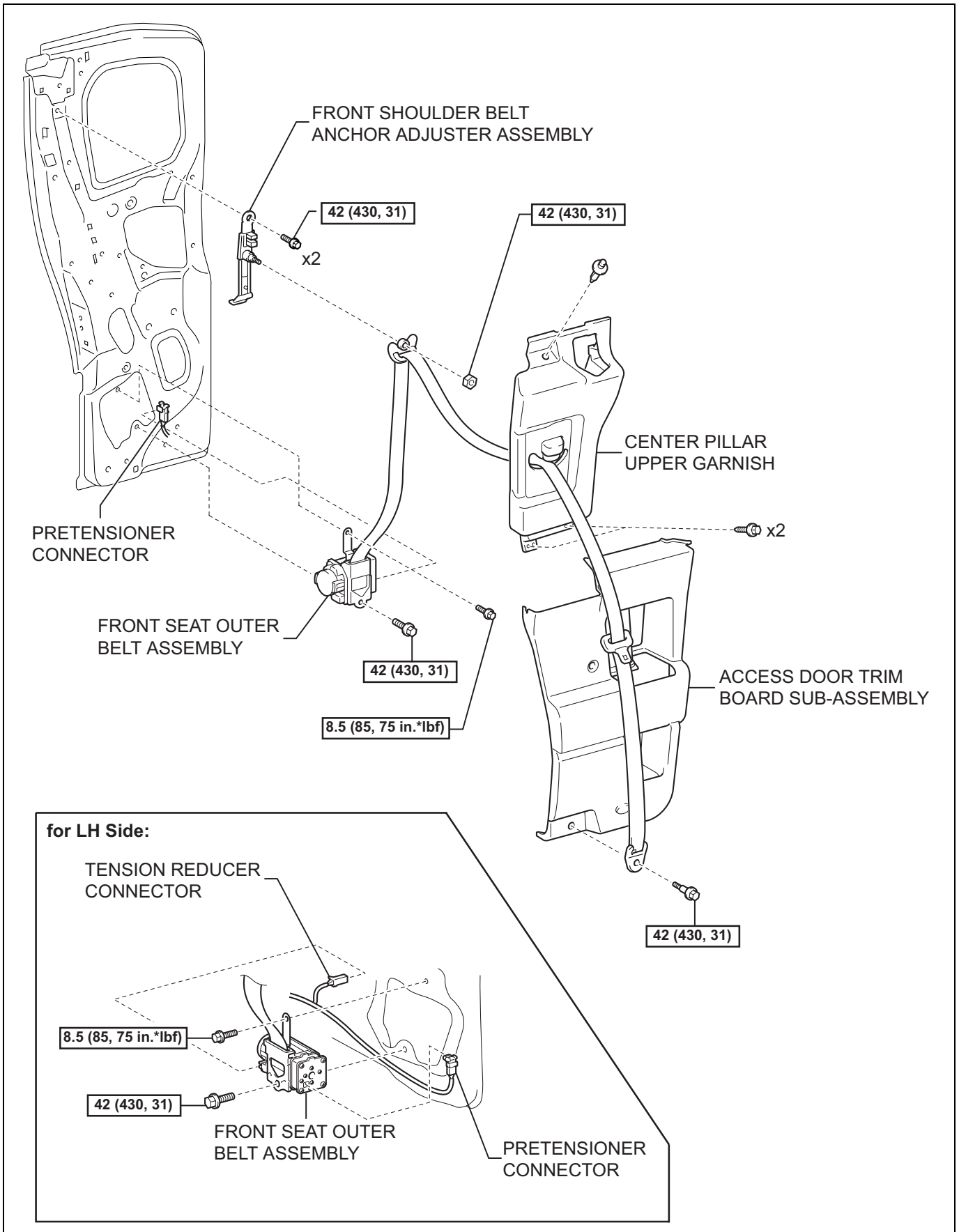

N*m (kgf*cm, ft.*lbf) : Specified torque

Y

B135086E01

SB

SB

REMOVAL

CAUTION:
Some of these service operations affect the SRS airbag system. Read the precautionary notices concerning the SRS airbag system before servicing (See page RS-1).
HINT:
The procedure described below is for the RH side. Use the same procedure for both the RH and LH sides, unless otherwise specified.

1. **DISCONNECT CABLE FROM NEGATIVE BATTERY TERMINAL**
   CAUTION:
   Wait for at least 90 seconds after disconnecting the cable to prevent the airbag from working.
2. **REMOVE ACCESS PANEL REAR WEATHERSTRIP (See page ED-29)**
3. **REMOVE LAP BELT OUTER ANCHOR COVER (See page ED-29)**
4. **REMOVE ACCESS DOOR INSIDE HANDLE SUB-ASSEMBLY (See page ED-29)**
5. **REMOVE CUP HOLDER (See page ED-29)**
6. **REMOVE ACCESS DOOR TRIM BOARD SUB-ASSEMBLY (See page ED-30)**
7. **REMOVE CENTER PILLAR UPPER GARNISH (See page ED-30)**
8. **REMOVE FRONT SEAT OUTER BELT ASSEMBLY**
   (a) Remove the nut and the through anchor.

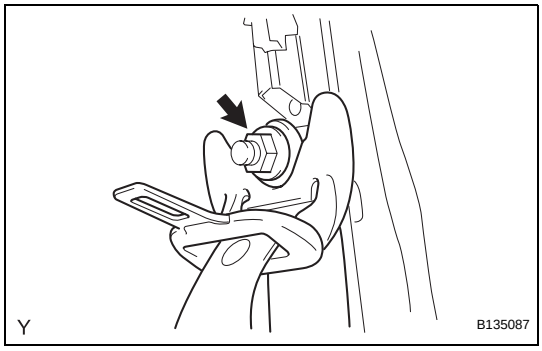

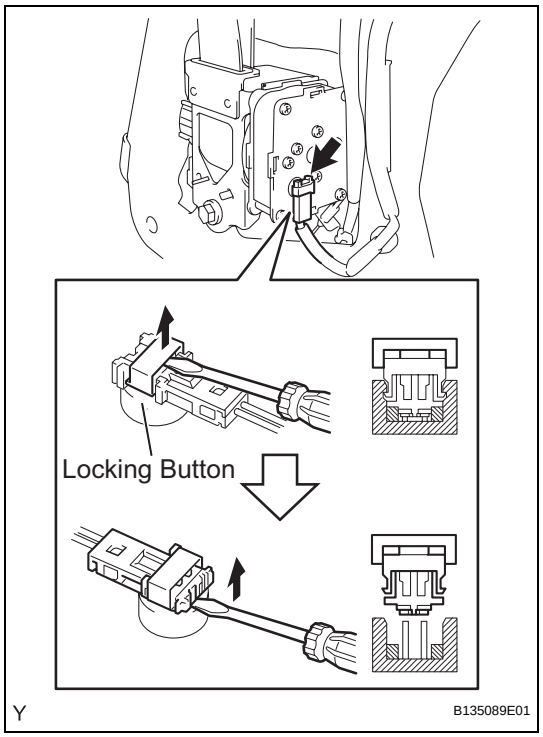

(b) for RH Side:
(1) Using a screwdriver, release the locking button of the pretensioner connector.
(2) Using a screwdriver, disconnect the pretensioner connector.

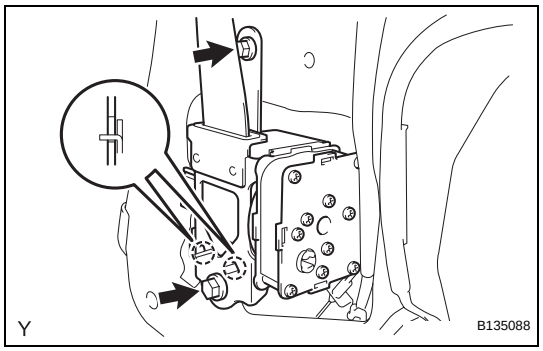

(3) Remove the 2 bolts, the 2 hooks and the retractor.

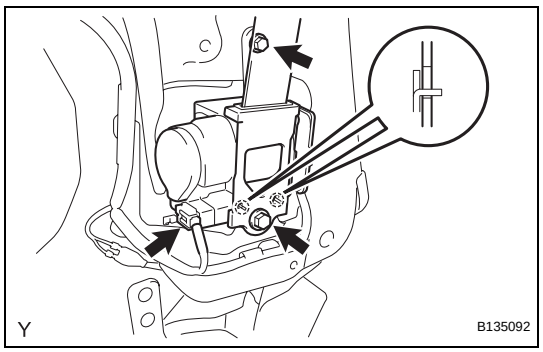

(c) for LH Side:
(1) Disconnect the tension reducer connector.
(2) Remove the 2 bolts, the 2 hooks and the retractor.

SB

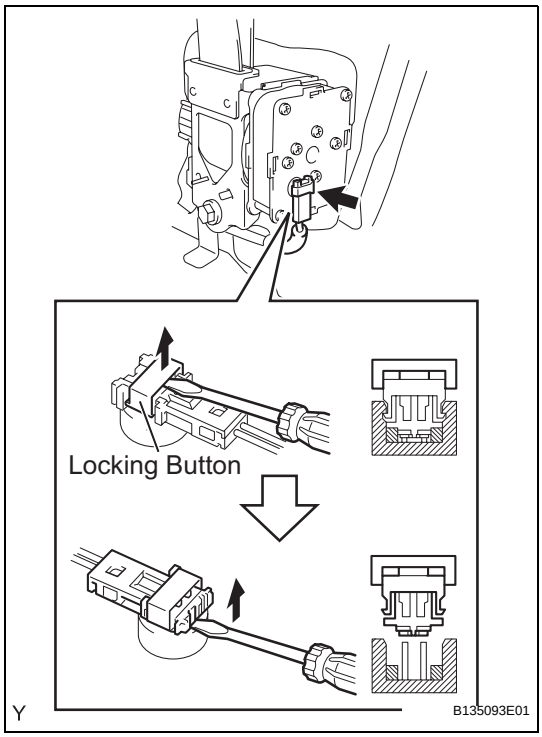

(3) Using a screwdriver, release the locking button of the pretensioner connector.
(4) Using a screwdriver, disconnect the pretensioner connector.

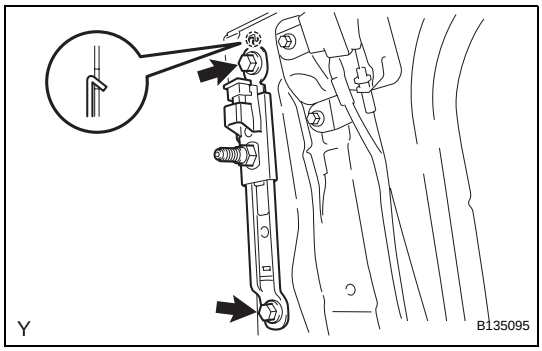

9. REMOVE FRONT SHOULDER BELT ANCHOR ADJUSTER ASSEMBLY
(a) Remove the 2 bolts, the hook and the shoulder belt anchor adjuster.

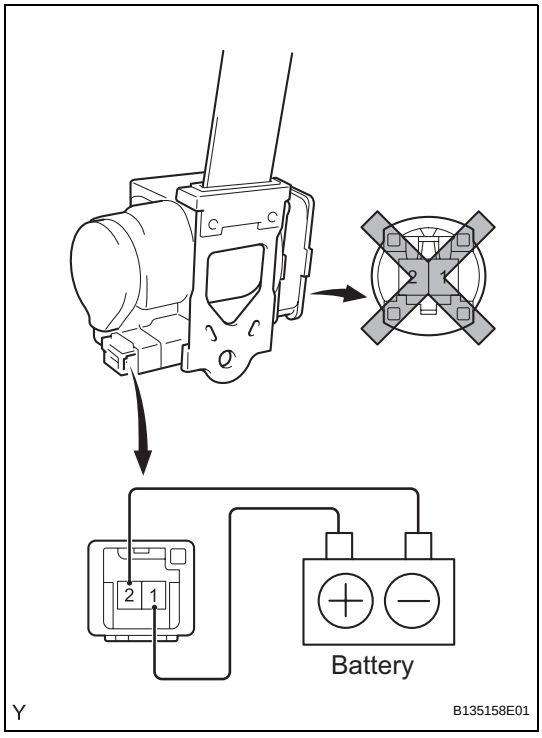

INSPECTION

1. INSPECT FRONT SEAT OUTER BELT ASSEMBLY (for Driver Side)
(a) Check the operation.
NOTICE:
Do not apply battery voltage to the pretensioner connector.
(1) Connect the positive battery lead to terminal 1 of the tension reducer connector and the negative battery lead to terminal 2.
(2) Check that an operating sound is heard when the magnetized solenoid attracts the plunger.
(3) Pull out the seat belt and allow it to retract. Listen to the operating sound.
(4) Pull out the seat belt again, disconnect the negative battery lead and allow the seat belt to retract. Listen to the operating sound again and check that the operating sound volume has increased.
If the result is not as specified, replace the front seat outer belt.

INSTALLATION

CAUTION:
Some of these service operations affect the SRS airbag system. Read the precautionary notices concerning the SRS airbag system before servicing (See page RS-1).
HINT:
The procedure described below is for the RH side. Use the same procedure for both the RH and LH sides, unless otherwise specified.

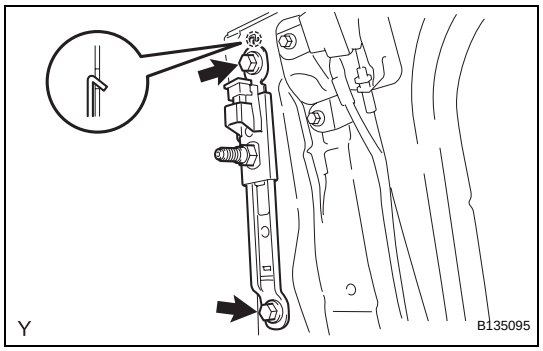

1. INSTALL FRONT SHOULDER BELT ANCHOR ADJUSTER ASSEMBLY

(a) Insert the hook into the body hole and provisionally install the shoulder belt anchor adjuster with the 2 bolts.

(b) Tighten the upper bolt and then the lower bolt.
Torque: 42 N*m (430 kgf*cm, 31 ft.*lbf)

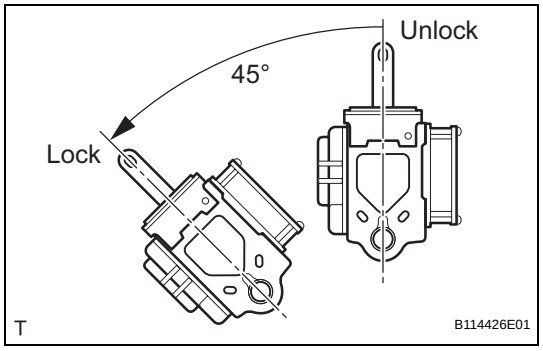

2. INSTALL FRONT SEAT OUTER BELT ASSEMBLY

(a) Check the angle of inclination required to lock the retractor.

(1) Gently incline the retractor from its initial position. Check that the belt does not lock when the retractor is inclined 15° or less in any direction. Also, check that the belt locks when the inclination of the retractor is 45° or more.
NOTICE:
Do not disassemble the retractor.
If the operation is not as specified, replace the front seat outer belt.

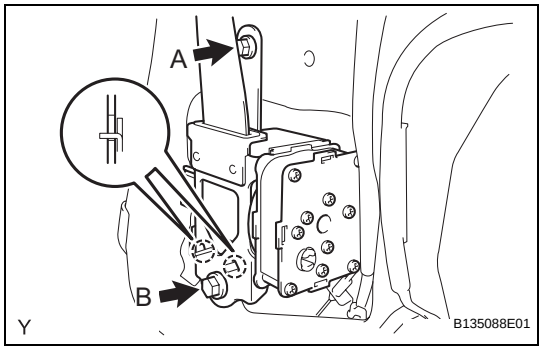

(b) for RH Side:

(1) Hook the lower stay of the retractor onto the 2 body hooks and provisionally install the retractor with the 2 bolts.

(2) Tighten bolt A and then bolt B.
Torque: 8.5 N*m (85 kgf*cm, 75 in.*lbf) for bolt A
42 N*m (430 kgf*cm, 31 ft.*lbf) for bolt B

SB

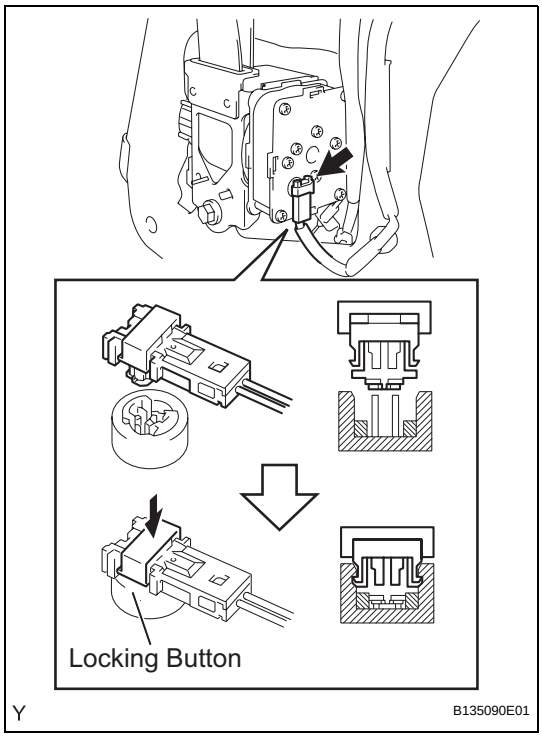

(3) Connect the pretensioner connector.
(4) Lock the locking button of the pretensioner connector.
NOTICE:
Securely lock the locking button.

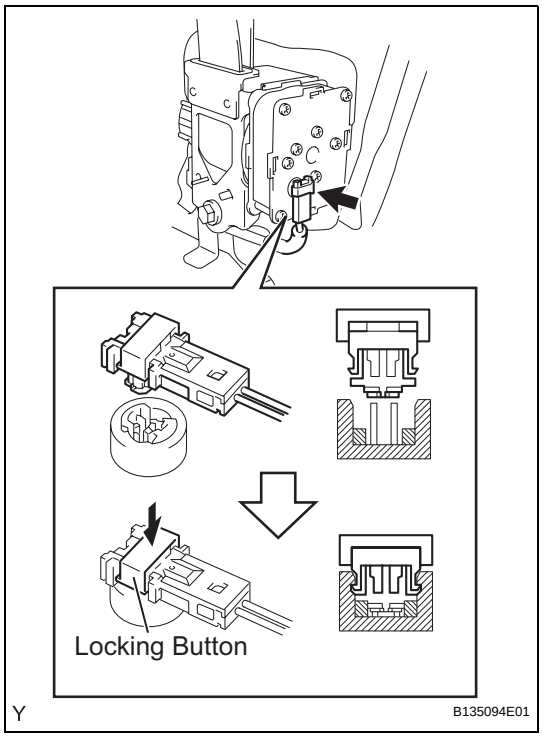

(c) for LH Side:
(1) Connect the pretensioner connector.
(2) Lock the locking button of the pretensioner connector.
NOTICE:
Securely the locking button.

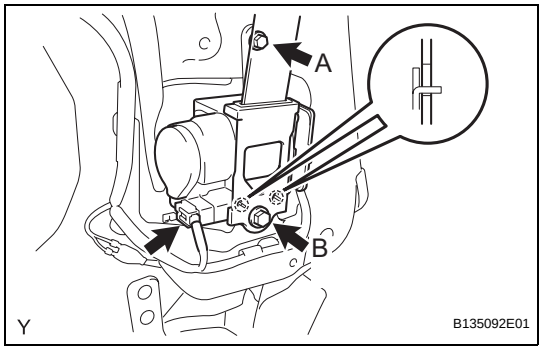

(3) Hook the lower stay of the retractor onto the 2 body hooks and provisionally install the retractor with the 2 bolts.
(4) Tighten bolt A and then bolt B.
Torque: 8.5 N*m (85 kgf*cm, 75 in.*lbf) for bolt A
42 N*m (430 kgf*cm, 31 ft.*lbf) for bolt B
(5) Connect the tension reducer connector.

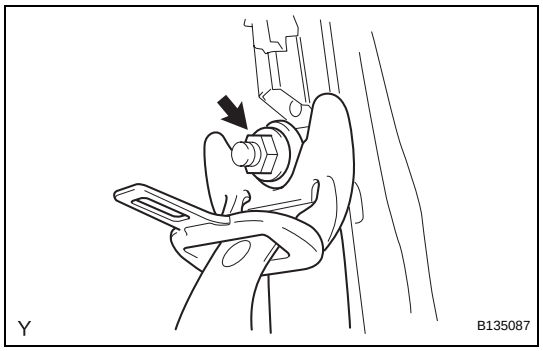

(d) Install the through anchor with the bolt.
Torque: 42 N*m (430 kgf*cm, 31 ft.*lbf)

(e) Make sure that the shoulder anchor rotates smoothly.

(f) Check that the ELR locks.
NOTICE:
Perform the check with the front seat outer belt installed.

(1) With the belt installed, check that the belt locks when it is pulled out quickly.
If the operation is not as specified, replace the front seat outer belt.

3. **INSTALL CENTER PILLAR UPPER GARNISH (See page ED-40)**
4. **INSTALL ACCESS DOOR TRIM BOARD SUB-ASSEMBLY (See page ED-41)**
5. **INSTALL CUP HOLDER (See page ED-41)**
6. **INSTALL ACCESS DOOR INSIDE HANDLE SUB-ASSEMBLY (See page ED-41)**
7. **INSTALL LAP BELT OUTER ANCHOR COVER (See page ED-42)**
8. **INSTALL ACCESS PANEL REAR WEATHERSTRIP (See page ED-42)**
9. **CONNECT CABLE TO NEGATIVE BATTERY TERMINAL**
Torque: 3.9 N*m (40 kgf*cm, 35 in.*lbf)
10. **INSPECT SRS WARNING LIGHT**
(See page RS-29)

DISPOSAL

CAUTION:

- **Never dispose of a front seat outer belt that has an inactivated pretensioner.**
- **The seat belt pretensioner produces a loud, exploding sound when it activates. Perform the operation where it will not be a nuisance to persons nearby.**
- **Stand at least 10 m (33 ft) away when activating a front seat outer belt (with the seat belt pretensioner).**
- **Use gloves and safety glasses when handling a front seat outer belt with an activated pretensioner.**
- **Always wash your hands with water after completing an activation.**
- **Do not apply water to a front seat outer belt that has an activated pretensioner.**
- **Always use the specified SST (SRS airbag deployment tool) when activating the seat belt pretensioner.**
- **Perform the operation in a place away from electrical interference.**

HINT:
The procedure described below is for the RH side. Use the same procedure for both the RH and LH sides, unless otherwise specified.

1. DISPOSE OF FRONT SEAT OUTER BELT ASSEMBLY (When Installed in Vehicle)

HINT:
Prepare a battery as the power source to activate the seat belt pretensioner.

(a) Check whether SST is functioning.
SST 09082-00700
CAUTION:
Always use the specified SST when activating the seat belt pretensioner.

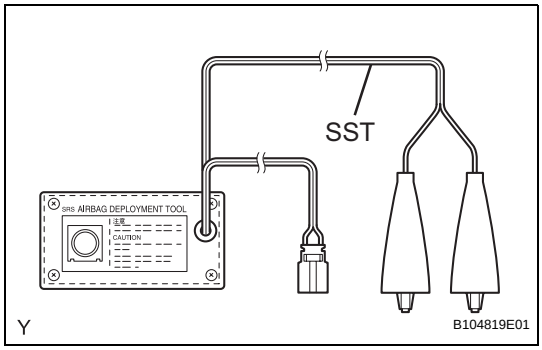

(1) Connect the SST red clip to the positive battery terminal and the black clip to the negative battery terminal.
HINT:
Do not connect the yellow connector. The yellow connector is for connections to the seat belt pretensioner.

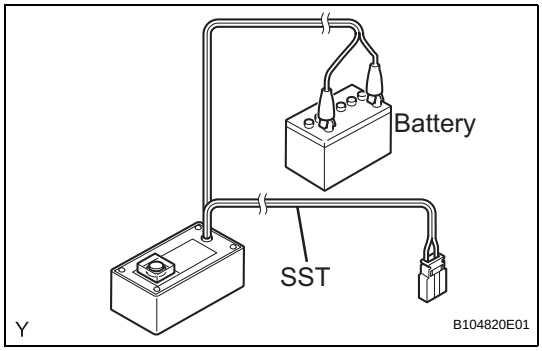

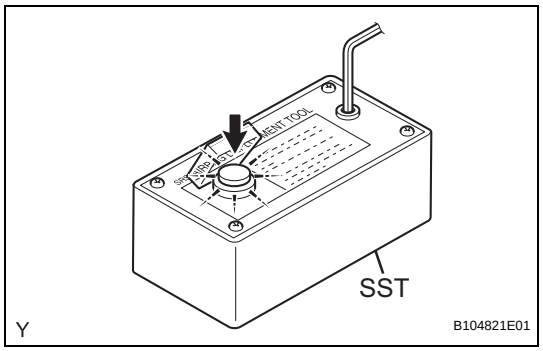

(2) Press the SST activation switch and check that the LED of the SST activation switch illuminates.
CAUTION:
If the LED illuminates when the activation switch is not being pressed, SST may be malfunctioning. Do not use SST.

(b) Disconnect the SST from the battery.

(c) Disconnect the pretensioner connector.

(1) Disconnect the cable from the negative battery terminal.

(2) Remove the access panel rear weatherstrip (See page ED-29).

(3) Remove the lap belt outer anchor cover (See page ED-29).

(4) Remove the access door inside handle sub-assembly (See page ED-29).

(5) Remove the cup holder (See page ED-29).

(6) Remove the access door trim board sub-assembly (See page ED-30).

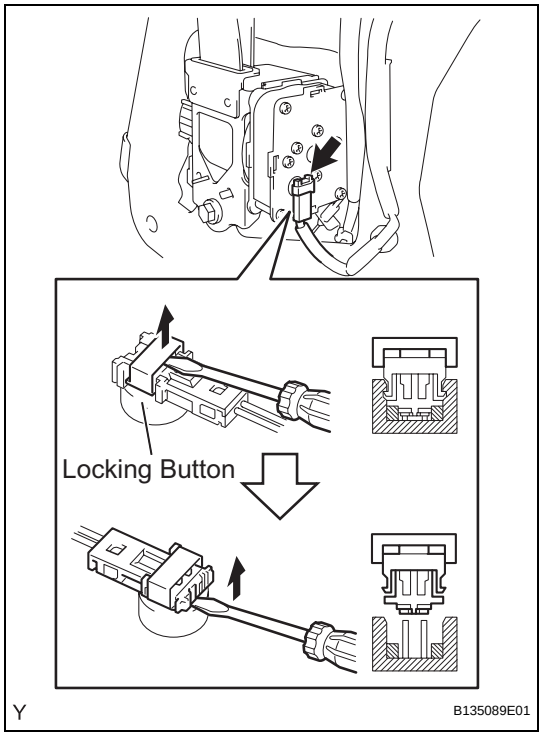

(7) Disconnect the pretensioner connector.
1. Using a screwdriver, release the locking button.
2. Using a screwdriver, disconnect the pretensioner connector.

SB

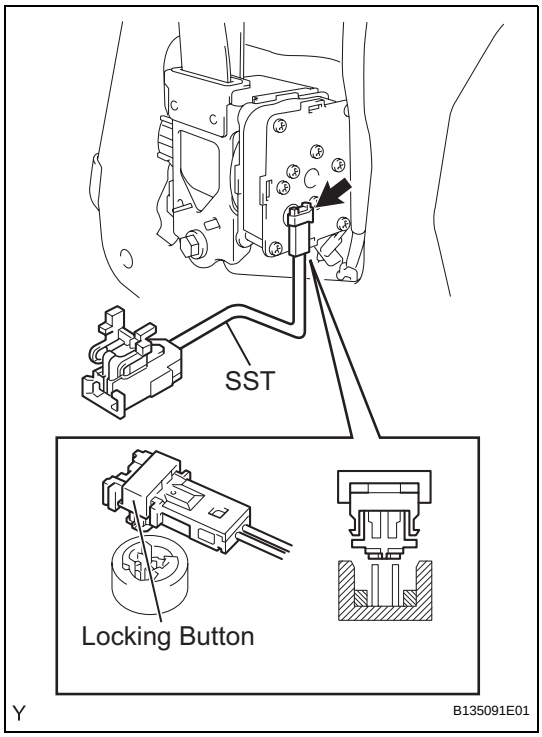

(d) Connect SST.
  (1) Connect SST, then connect the yellow connector to the seat belt pretensioner.
  SST 09082-00770
  NOTICE:
  Do not lock the secondary lock of the twin lock to avoid damaging the SST connector and wire harness.

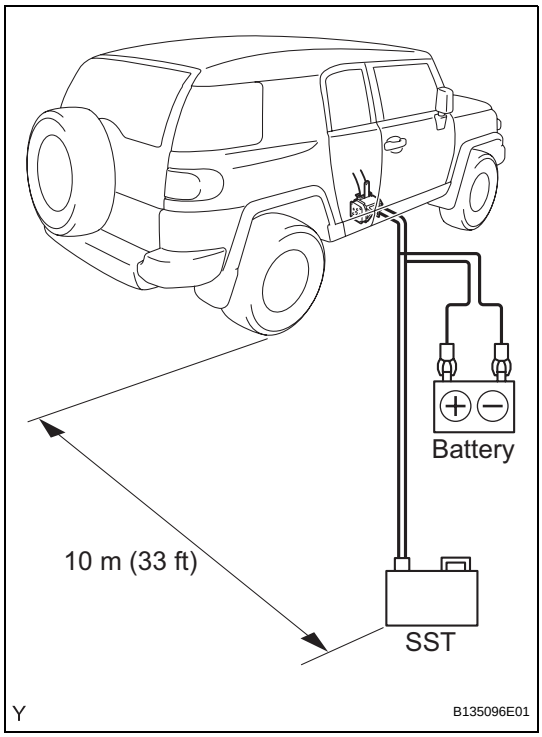

  (2) Connect SST.
  SST 09082-00700
  NOTICE:
  Do not lock the secondary lock of the twin lock to avoid damaging the SST connector and wire harness.
  (3) Move SST at least 10 m (33 ft) away from the vehicle.
  (4) Close the doors and windows of the vehicle.
  NOTICE:
  Do not damage the SST wire harness.
  HINT:
  Do not close the windows fully. Leave a gap for inserting the SST wire harness.
  (5) Connect the SST red clip to the positive battery terminal and the black clip to the negative battery terminal.

(e) Activate the seat belt pretensioner.
  (1) Confirm that no one is inside the vehicle or within 10 m (33 ft) of the vehicle.
  (2) Press the SST activation switch and activate the seat belt pretensioner.
  HINT:
  The seat belt pretensioner operates simultaneously with the SST activation switch LED light.

(f) Disconnect SST.

SB

(g) Dispose of the front seat outer belt (with the seat belt pretensioner).
CAUTION:
- **Do not touch the front seat outer belt for at least 30 minutes after the seat belt pretensioner has been activated. It is very hot.**
- **Use gloves and safety glasses when handling a front seat outer belt with a pretensioner that has been activated.**
- **Always wash your hands with water after completing the operation.**
- **Do not apply water to a front seat outer belt that has an activated pretensioner.**

HINT:
When scrapping a vehicle, activate the seat belt pretensioner, and then scrap the vehicle with the activated front seat outer belt still installed.

2. DISPOSE OF FRONT SEAT OUTER BELT ASSEMBLY (When not Installed in Vehicle)

NOTICE:
- **Never use the customers vehicle to activate the seat belt pretensioner when only disposing of the front seat outer belt (with the seat belt pretensioner).**
- **Follow the procedure described below when activating the seat belt pretensioner.**

HINT:
Prepare a battery as the power source to activate the seat belt pretensioner.

(a) Remove the front seat outer belt assembly (See page SB-36).

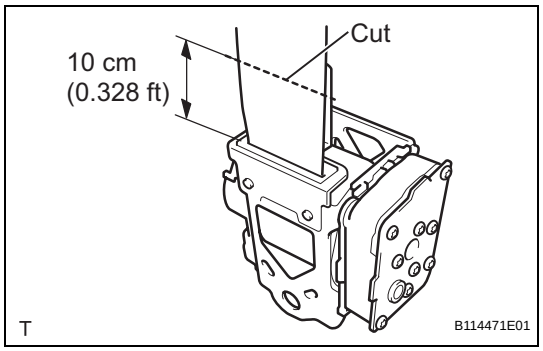

(b) Wind the seat belt with the retractor.
(c) When the seat belt is sufficiently wound, cut the seat belt approximately 10 cm (0.328 ft) from the retractor, as shown in the illustration.
HINT:
The retractor resistance increases in correlation with how much the seat belt is wound.

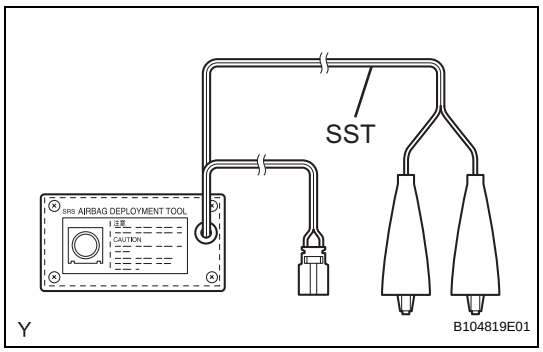

(d) Check whether SST is functioning.
SST 09082-00700
CAUTION:
Always use the specified SST when activating the seat belt pretensioner.

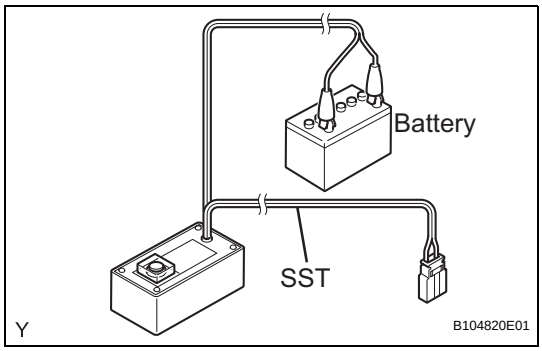

(1) Connect the SST red clip to the positive battery terminal and the black clip to the negative battery terminal.
HINT:
Do not connect the yellow connector. The yellow connector is for connections to the seat belt pretensioner.

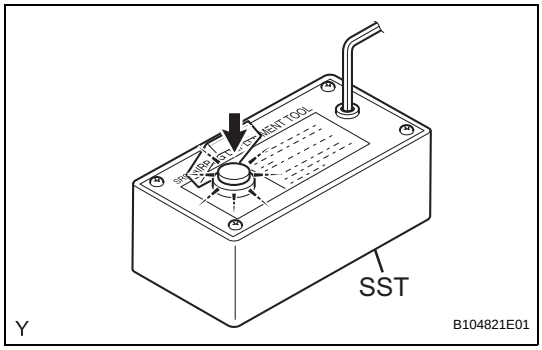

(2) Press the SST activation switch and check that the LED of the SST activation switch illuminates.
CAUTION:
If the LED illuminates when the activation switch is not being pressed, SST may be malfunctioning. Do not use SST.

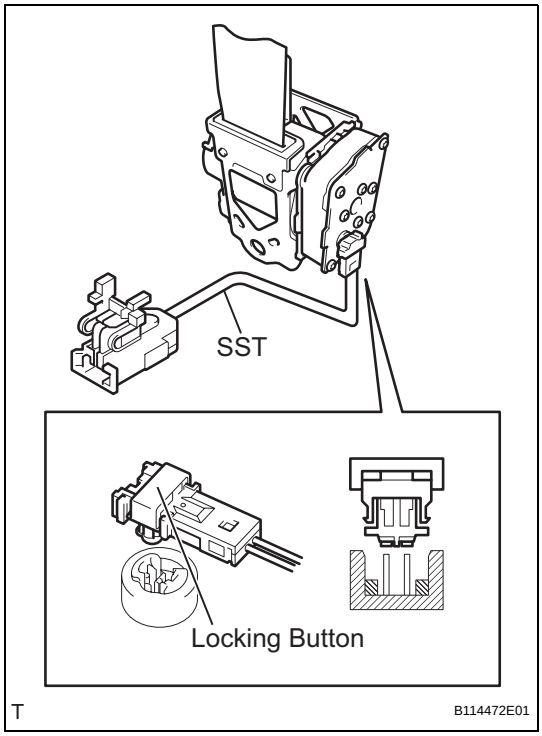

(e) Connect SST.
(1) Connect SST, then connect the yellow connector to the seat belt pretensioner.
SST 09082-00770
NOTICE:
Do not lock the secondary lock of the twin lock to avoid damaging the SST connector and wire harness.

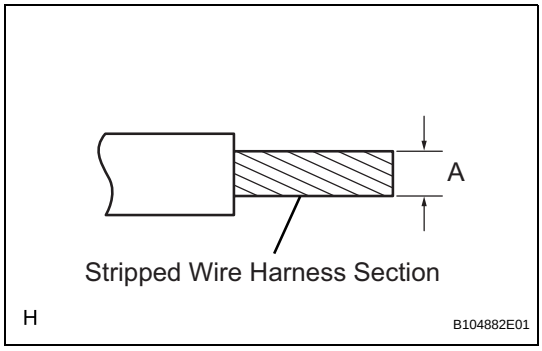

(2) Using a service-purpose wire harness for the vehicle, tie the seat belt pretensioner to the tire with a wheel attached.
Stripped wire harness section

Area	Measurement
A	1.25 mm^2 or more (0.0019 $in.^2$ or more)

CAUTION:

- **Do not use wire harnesses that are too thin or any other object to tie the seat belt pretensioner because they may snap due to the shock when the pretensioner is deployed.**
- **Always use a wire harness for vehicle use, with a cross section of at least 1.25 mm^2 (0.0019 in.^{2}).**

HINT:

To calculate the area of the stripped wire harness cross section:

Area = 3.14 x (Diameter)^2 divided by 4

(3) Connect SST.

SST 09082-00700

NOTICE:

- **Do not lock the secondary lock of the twin lock to avoid damaging the SST connector and wire harness.**
- **Set up the front seat outer belt, as shown in the illustration.**

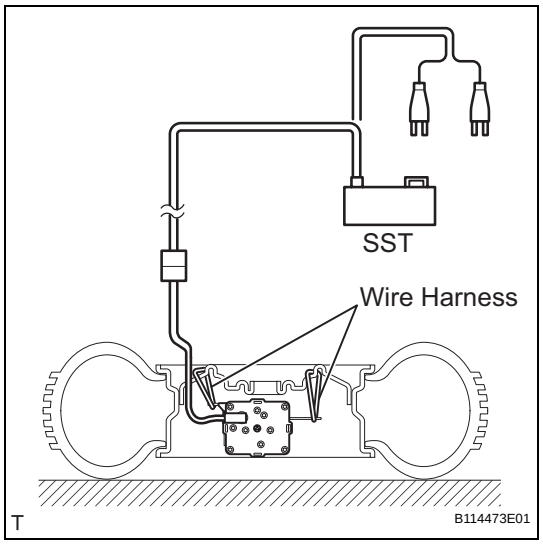

(4) Move SST at least 10 m (33 ft) away from the wheel.

NOTICE:

Do not damage the SST wire harness.

(f) Activate the seat belt pretensioner.

(1) Connect the SST red clip to the positive battery terminal and the black clip to the negative battery terminal.

(2) Check that no one is within 10 m (30 ft) of the wheel.

(3) Press the SST activation switch and activate the seat belt pretensioner.

HINT:

The seat belt pretensioner operates simultaneously with the SST activation switch LED light.

(g) Disconnect SST.

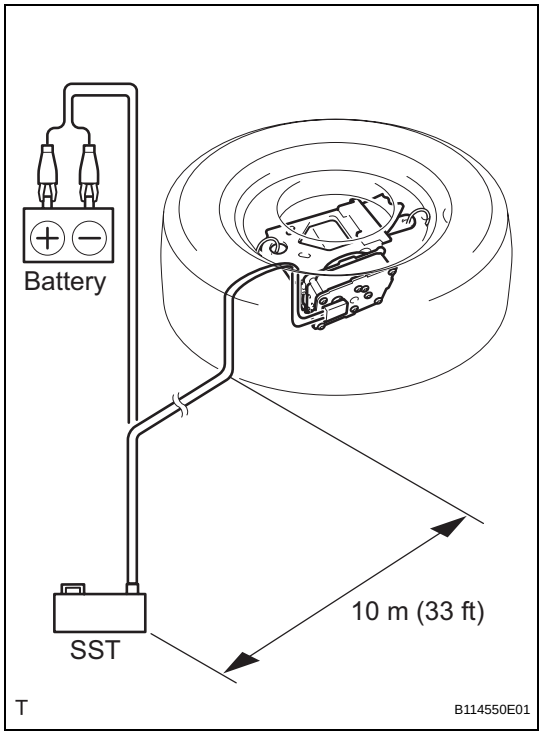

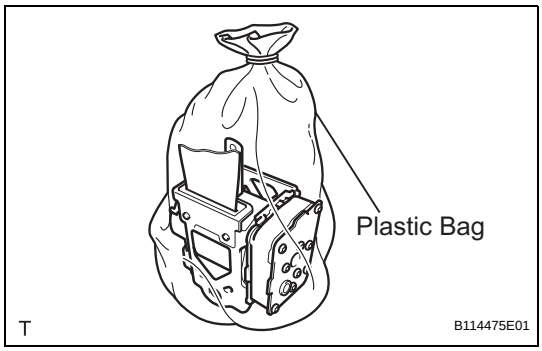

(h) Dispose of the front seat outer belt (with the seat belt pretensioner).

CAUTION:

- **Do not touch the front seat outer belt for at least 30 minutes after the seat belt pretensioner has been activated. It is very hot.**
- **Use gloves and safety glasses when handling a front seat outer belt with a pretensioner that has been activated.**
- **Always wash your hands with water after completing the operation.**
- **Do not apply water to a front seat outer belt that has an activated pretensioner.**

(1) Place the front seat outer belt in a plastic bag, tie the end tightly and dispose of it in the same way as other general parts.

REAR SEAT INNER BELT ASSEMBLY

COMPONENTS

for RH Side:

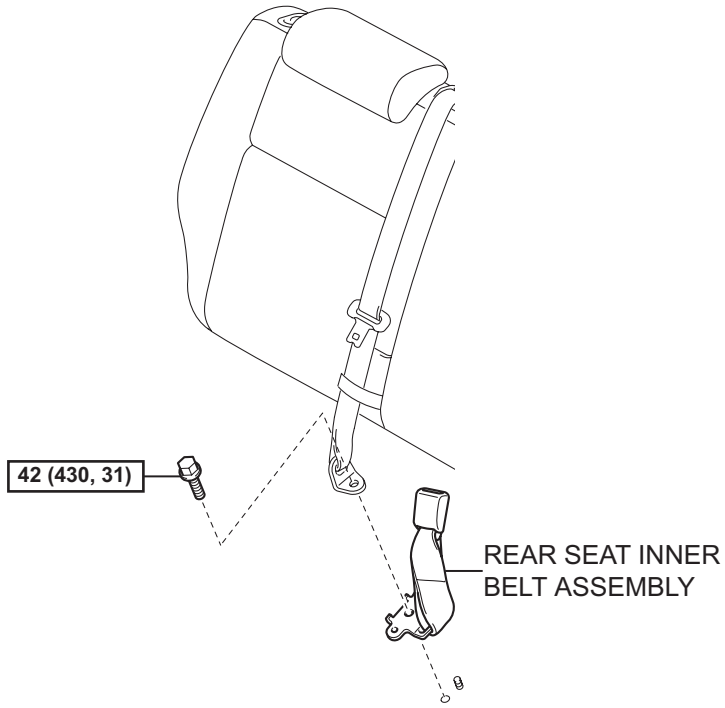

for LH Side:

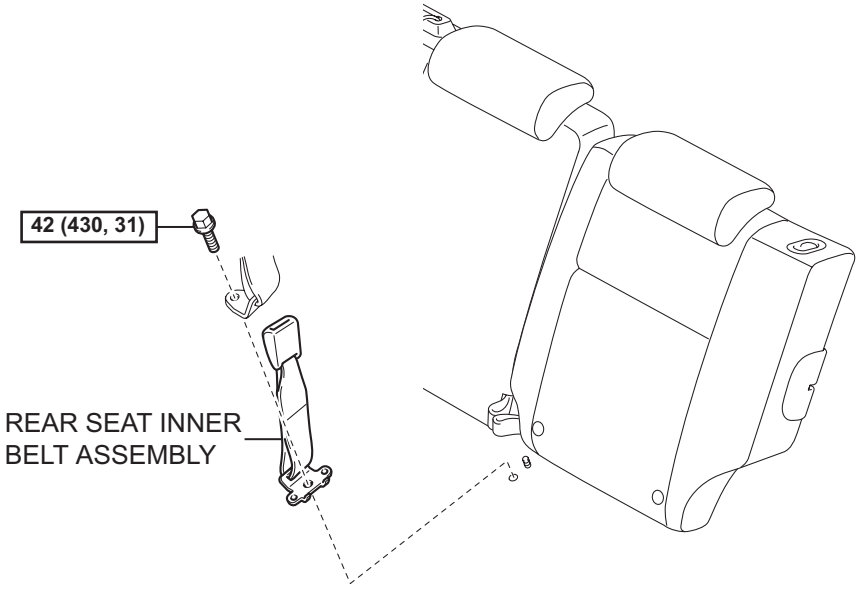

N*m (kgf*cm, ft*lbf) : Specified torque

Y

B135172E01

SB

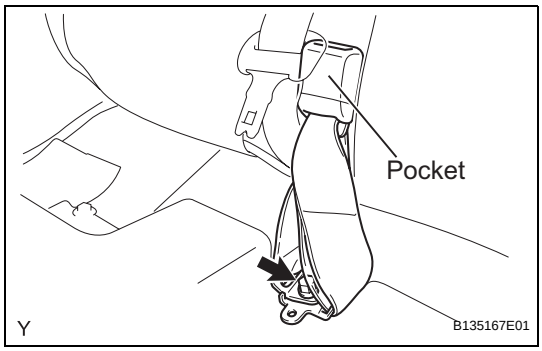

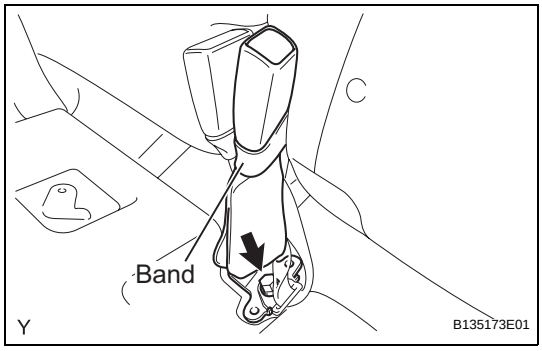

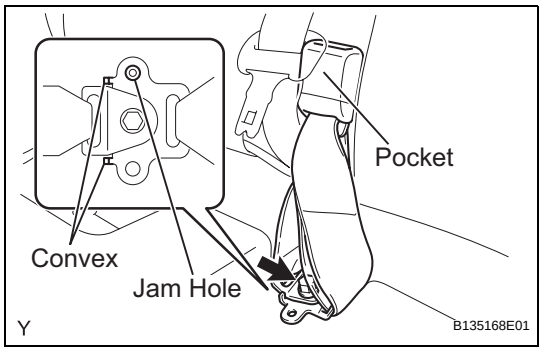

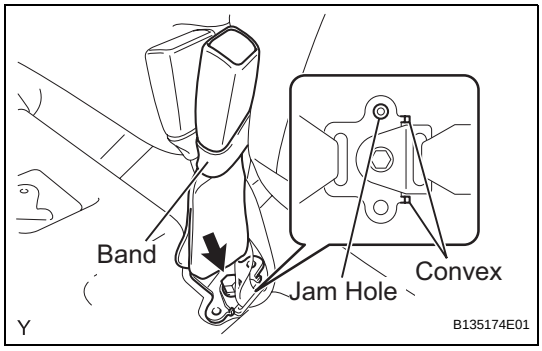

REMOVAL

1. REMOVE REAR SEAT INNER BELT ASSEMBLY

(a) for RH Side:
- (1) Pull up the rear seat cushion.
- (2) Remove the buckle from the rear seatback pocket.
- (3) Remove the bolt, the anchor plate of the rear center seat outer belt and the rear seat inner belt.

(b) for LH Side:
- (1) Pull up the rear seat cushion.
- (2) Remove the buckle from the rear seatback band.
- (3) Remove the bolt, the anchor plate of the rear center seat inner belt and the rear seat inner belt.

INSTALLATION

1. INSTALL REAR SEAT INNER BELT ASSEMBLY

(a) for RH Side:
- (1) Align the jam hole in the anchor plate of the rear seat inner belt with the stud bolt of the body and provisionally install the anchor plate.
- (2) Install the anchor plate of the rear center seat inner belt with the bolt.
  Torque: 42 N*m (430 kgf*cm, 31 ft.*lbf)
  NOTICE:
  Do not place the anchor plate over the convex areas of the rear seat inner belt.
- (3) Install the buckle into the rear seatback pocket.
- (4) Install the rear seat cushion.

(b) for LH Side:
- (1) Align the jam hole in the anchor plate of the rear seat inner belt with the stud bolt of the body and provisionally install the anchor plate.
- (2) Install the anchor plate of the rear center seat inner belt with the bolt.
  Torque: 42 N*m (430 kgf*cm, 31 ft.*lbf)
  NOTICE:
  Do not place the anchor plate over the convex areas of the rear seat inner belt.
- (3) Install the buckle into the rear seatback band.
- (4) Install the rear seat cushion.

SB

REAR SEAT OUTER BELT ASSEMBLY

COMPONENTS

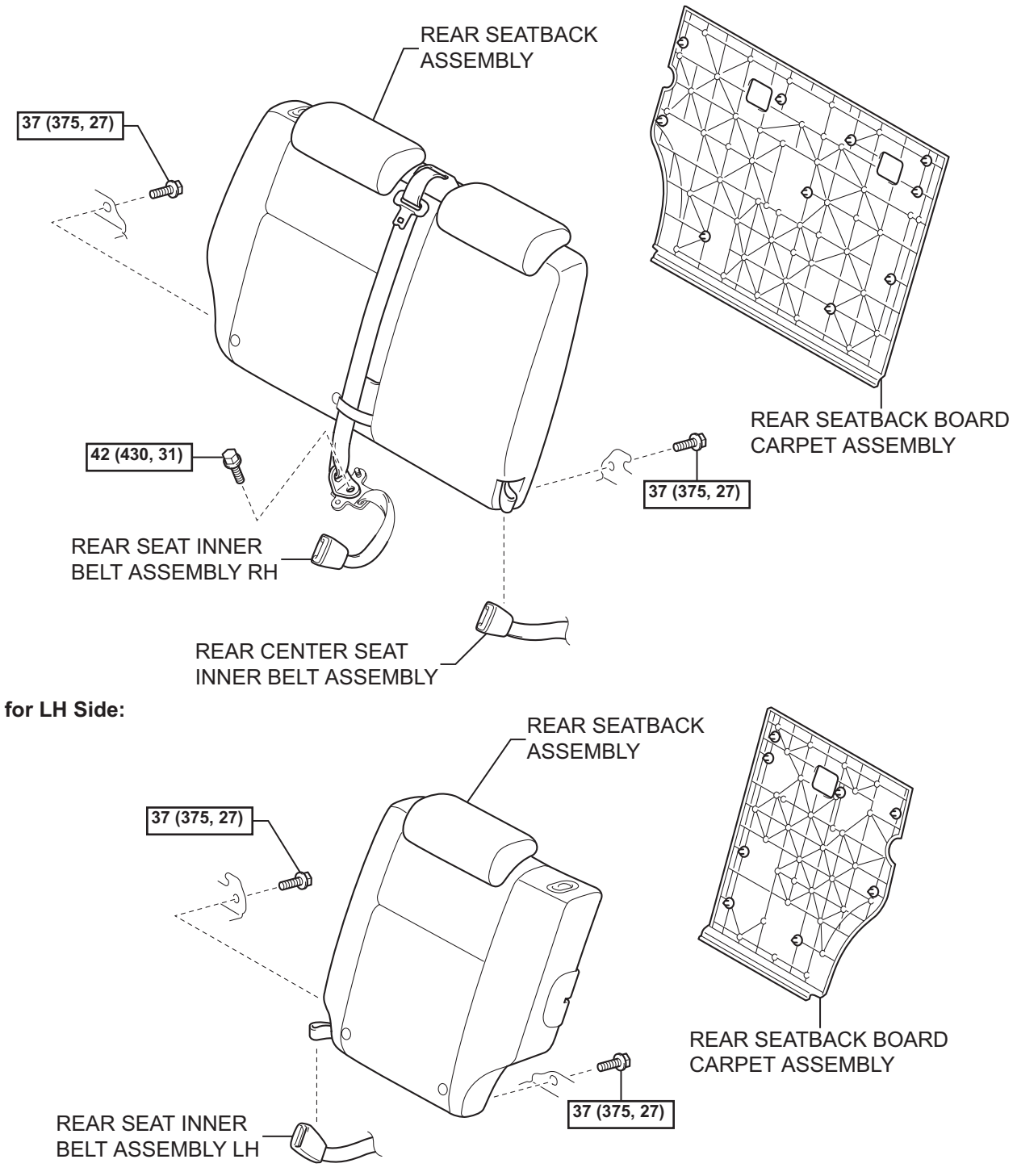

SB

SB

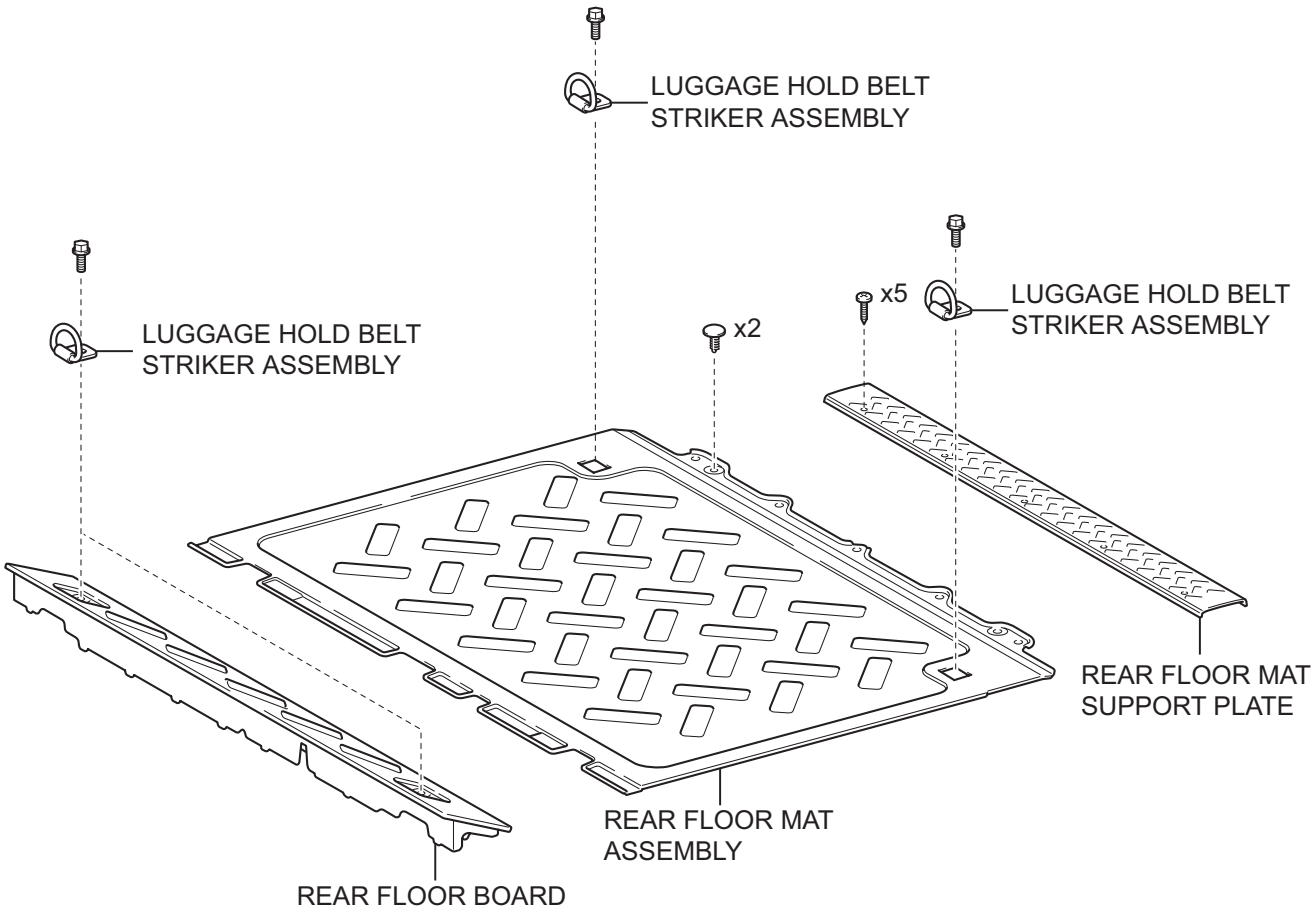

Y

B130655E01

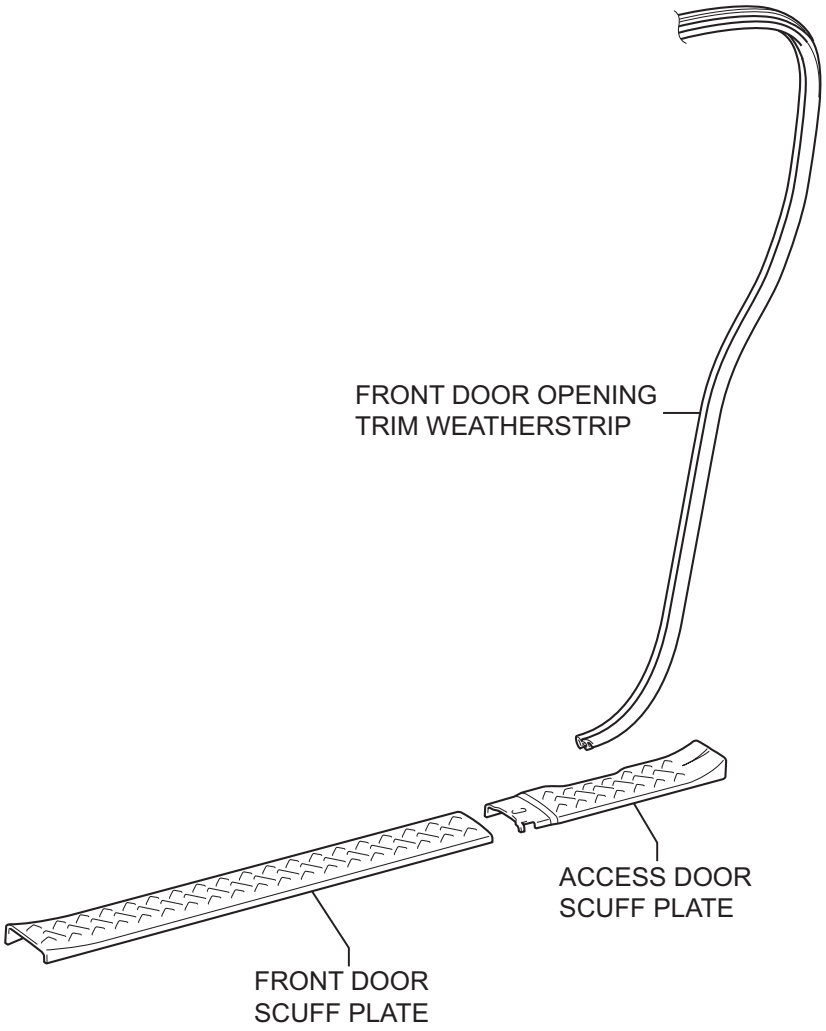

Y

B138381E01

for RH Side:

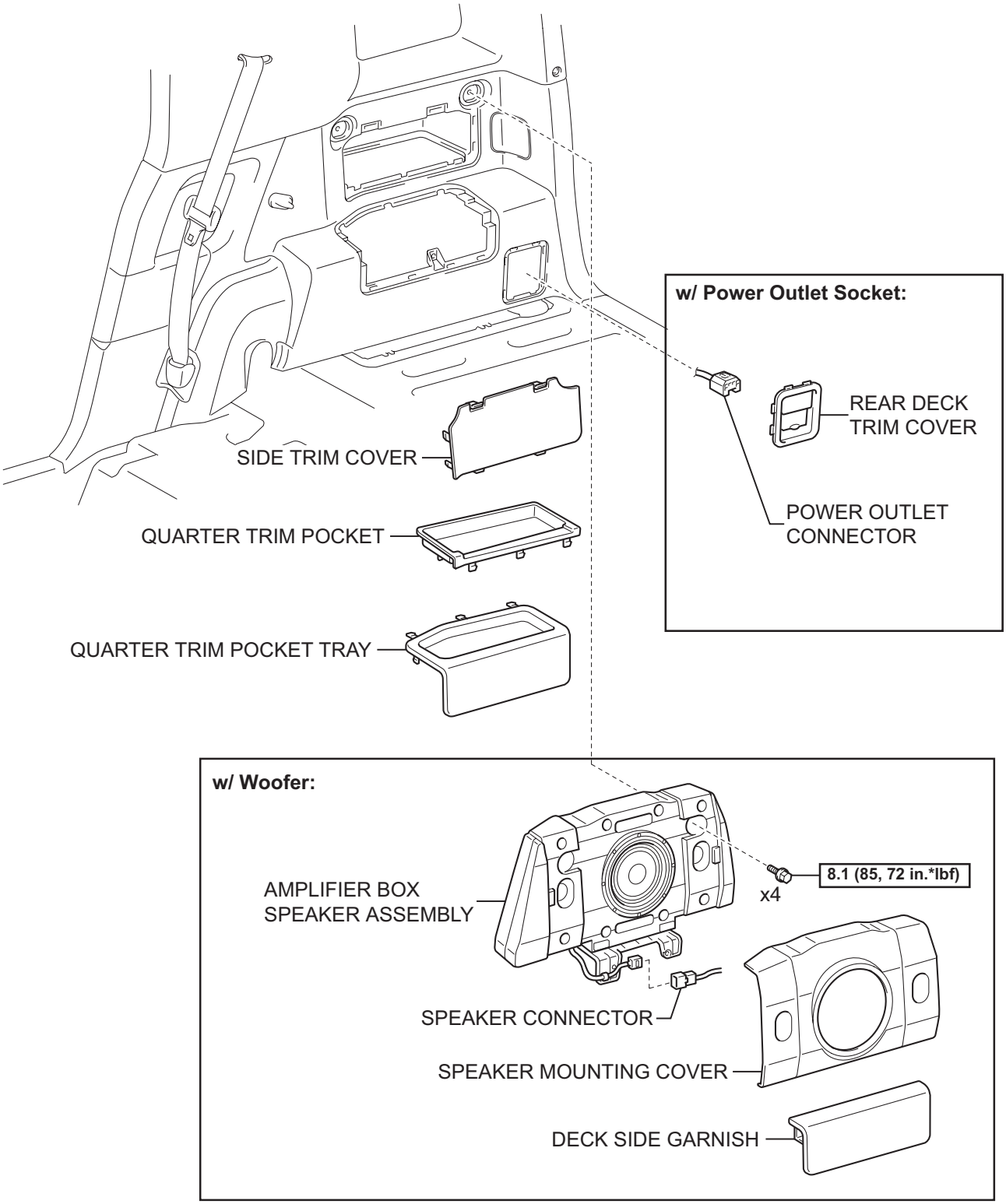

N*m (kgf*cm, ft*lbf) : Specified torque

Y

B138473E01

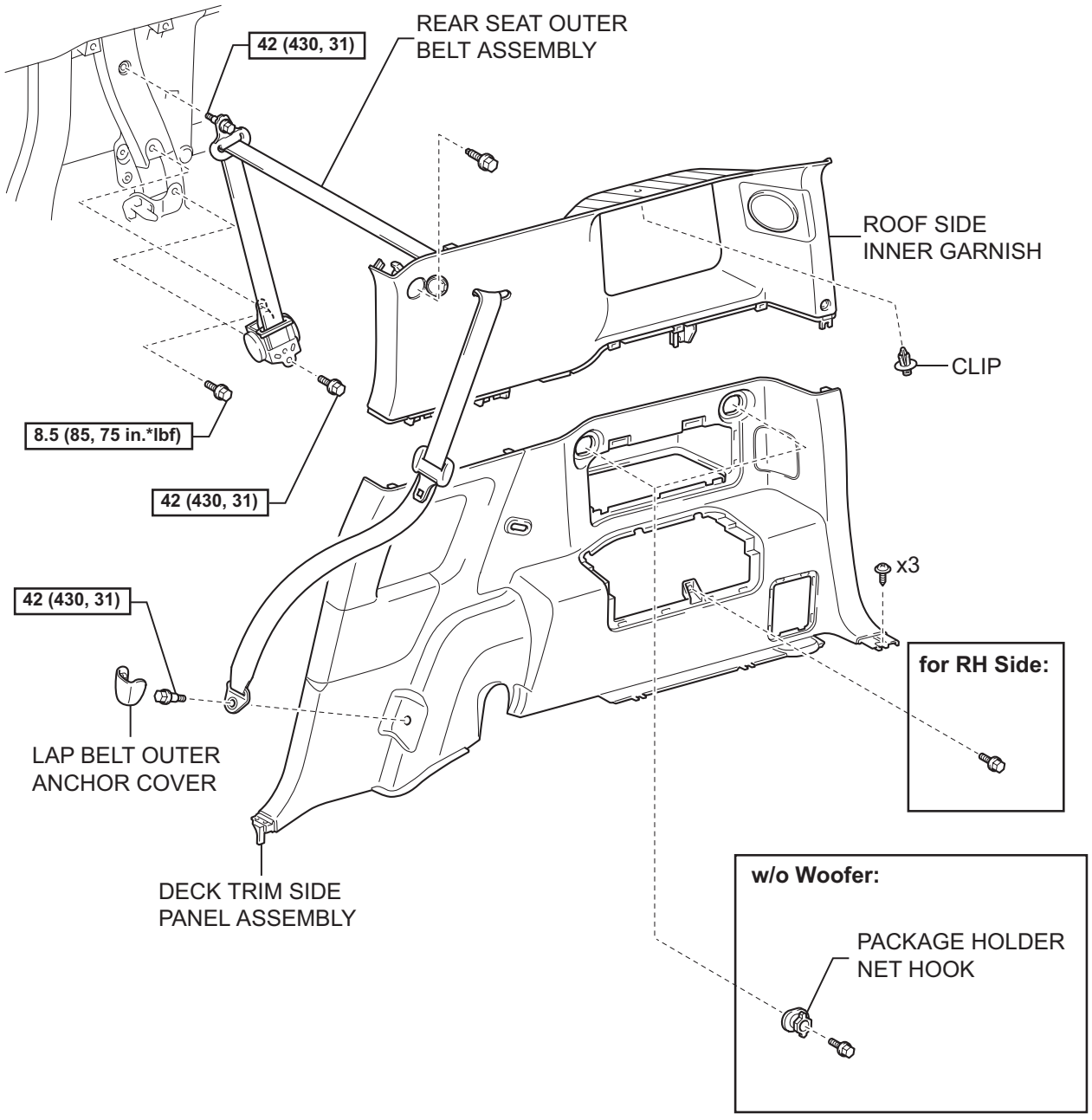

SB

N*m (kgf*cm, ft.*lbf) : Specified torque

Y

B134993E01

REMOVAL

HINT:
The procedure described below is for the RH side. Use the same procedure for both the RH and LH sides, unless otherwise specified.

1. **REMOVE CABLE FROM NEGATIVE BATTERY TERMINAL**
2. **REMOVE REAR SEATBACK BOARD CARPET ASSEMBLY**
   (a) for RH Side:
      (1) Remove the rear seatback board carpet assembly (See page SE-43).
   (b) for LH Side:
      (1) Remove the rear seatback board carpet assembly (See page SE-29).
3. **REMOVE REAR SEATBACK ASSEMBLY**
   (a) for RH Side:
      (1) Remove the rear seatback assembly (See page SE-43).
   (b) for LH Side:
      (1) Remove the rear seatback assembly (See page SE-29).
4. **REMOVE REAR FLOOR BOARD (See page IR-13)**
5. **REMOVE REAR FLOOR MAT SUPPORT PLATE (See page IR-14)**
6. **REMOVE LUGGAGE HOLD BELT STRIKER ASSEMBLY (See page IR-14)**
7. **REMOVE REAR FLOOR MAT ASSEMBLY (See page IR-15)**
8. **REMOVE FRONT DOOR SCUFF PLATE (See page IR-15)**
9. **REMOVE ACCESS DOOR SCUFF PLATE (See page IR-15)**
10. **REMOVE FRONT DOOR OPENING TRIM WEATHERSTRIP**
    (a) Remove the front door opening trim weatherstrip to the extent that the deck trim side panel and the roof side inner garnish can be removed.
11. **REMOVE DECK SIDE GARNISH (w/ Woofer) (See page IR-18)**
12. **REMOVE SPEAKER MOUNTING COVER (w/ Woofer) (See page AV-90)**
13. **REMOVE AMPLIFIER BOX SPEAKER ASSEMBLY (w/ Woofer) (See page AV-90)**

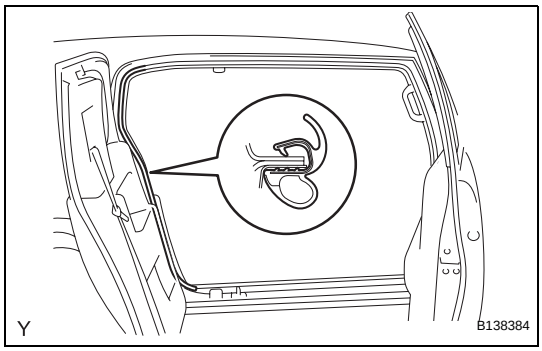

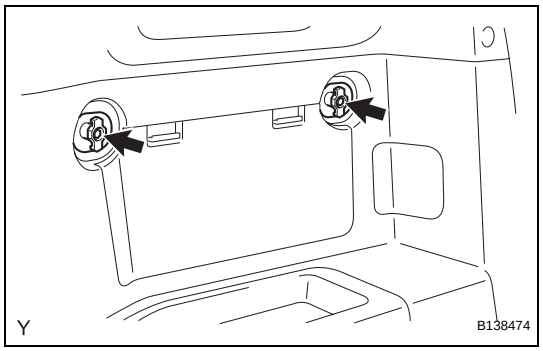

14. REMOVE PACKAGE HOLDER NET HOOK (w/o Woofer)

HINT:

Use the same procedure for both sides.

(a) Remove the screw and the package holder net hook.

15. REMOVE QUARTER TRIM POCKET TRAY (w/o Woofer) (See page IR-19)

16. REMOVE SIDE TRIM COVER (w/o Woofer) (See page IR-19)

17. REMOVE QUARTER TRIM POCKET (w/o Woofer) (See page IR-19)

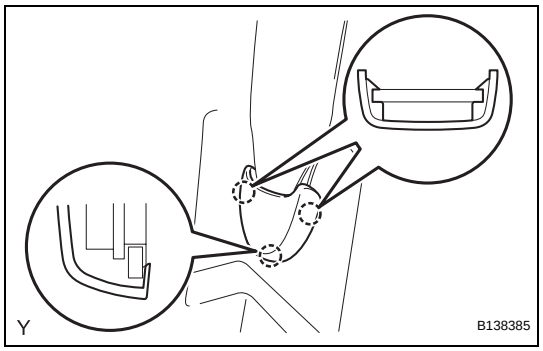

18. REMOVE LAP BELT OUTER ANCHOR COVER

(a) Disengage the 3 claws and remove the lap belt outer anchor cover.

19. REMOVE REAR DECK TRIM COVER (w/ Power Outlet Socket) (See page IR-20)

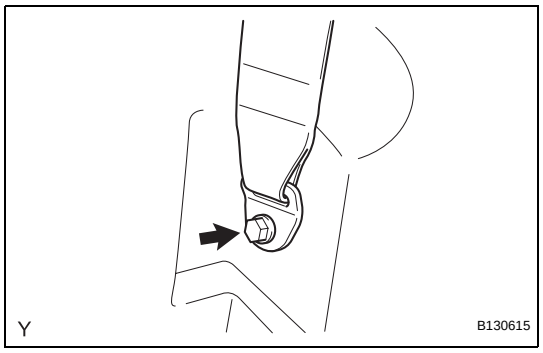

20. REMOVE DECK TRIM SIDE PANEL ASSEMBLY

(a) Remove the bolt and the anchor plate.

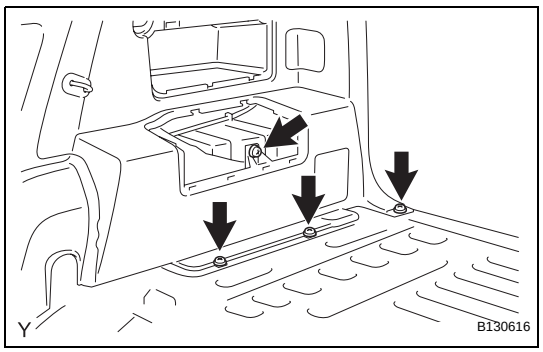

(b) for RH Side:

(1) Remove the 4 screws.

SB

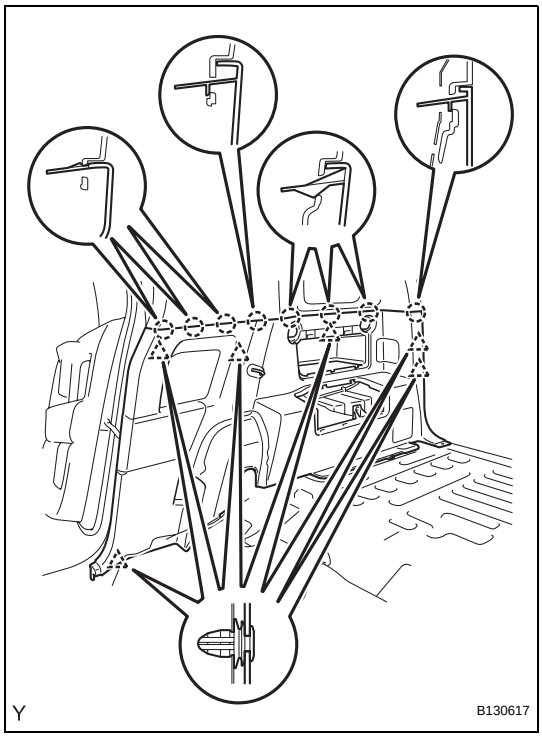

(2) Disengage the 6 clips and the 8 claws and remove the deck trim side panel.

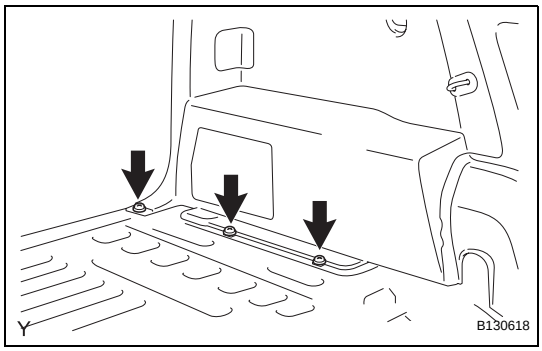

(c) for LH Side:
(1) Remove the 3 screws.

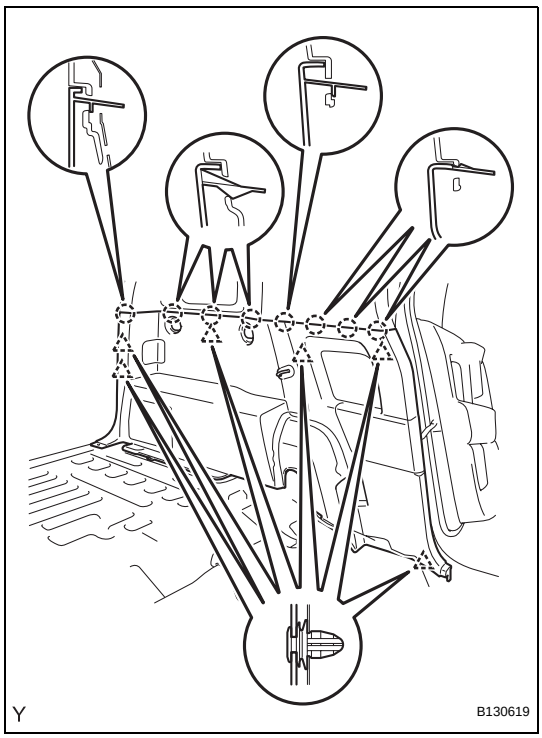

(2) Disengage the 6 clips and the 8 claws and remove the deck trim side panel.

21. REMOVE ROOF SIDE INNER GARNISH (See page IR-22)



22. REMOVE REAR SEAT OUTER BELT ASSEMBLY

(a) Remove the bolt and the through anchor.

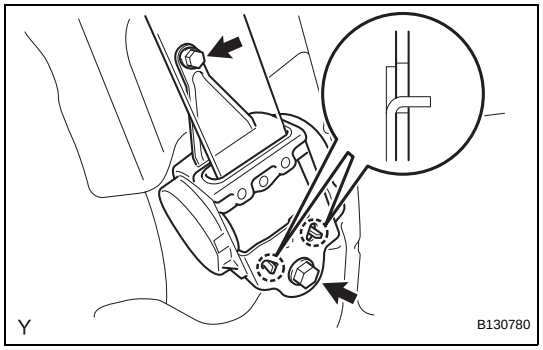

(b) Remove the 2 bolts, 2 hooks and the retractor.

INSTALLATION

HINT:
The procedure described below is for the RH side. Use the same procedure for both the RH and LH sides, unless otherwise specified.

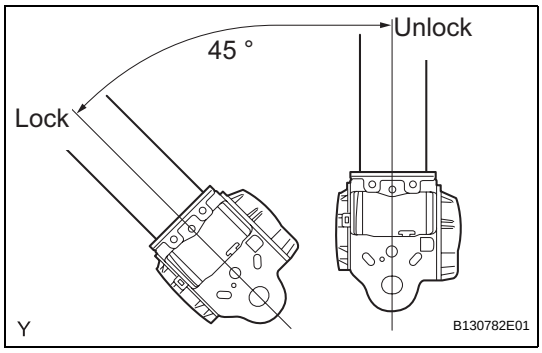

1. INSTALL REAR SEAT OUTER BELT ASSEMBLY

(a) Check the angle of inclination required to lock the retractor.

(1) Gently incline the retractor from its initial position. Check that the belt does not lock when the retractor is inclined 15° or less in any direction. Also, check that the belt locks when the inclination of the retractor is 45° or more.
NOTICE:
Do not disassemble the retractor.
If the operation is not as specified, replace the rear seat outer belt.

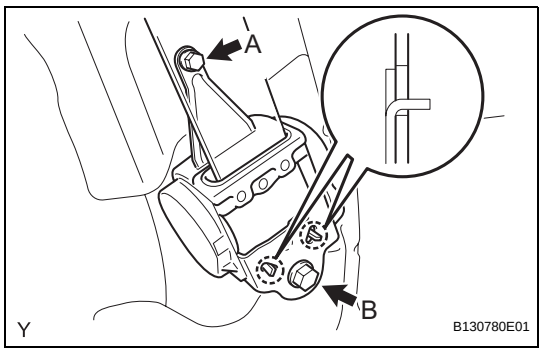

(b) Hook the lower stay of the retractor onto the 2 body hooks and provisionally install the retractor with the 2 bolts.

(c) Tighten bolt A and then bolt B.
Torque: 8.5 N*m (85 kgf*cm, 75 in.*lbf) for bolt A
42 N*m (430 kgf*cm, 31 ft.*lbf) for bolt B



(d) Install the through anchor with the bolt.
Torque: 42 N*m (430 kgf*cm, 31 ft.*lbf)

(e) Make sure that the shoulder anchor rotates smoothly.

(f) Check that the ELR locks.
NOTICE:
Perform the check with the front seat outer belt installed.

(1) With the belt installed, check that the belt locks when it is pulled out quickly.
If the operation is not as specified, replace the rear seat outer belt.

2. INSTALL ROOF SIDE INNER GARNISH (See page IR-38)

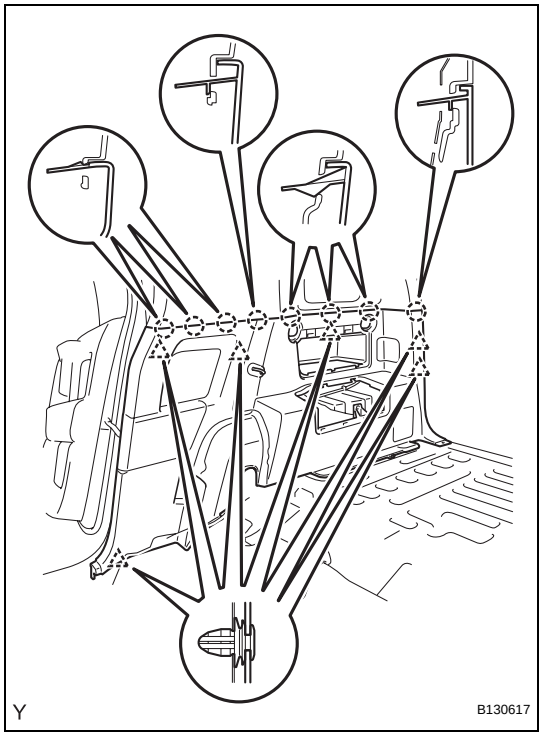

3. INSTALL DECK TRIM SIDE PANEL ASSEMBLY

(a) for RH Side:

(1) Engage the 6 clips and the 8 claws and install the deck trim side panel.

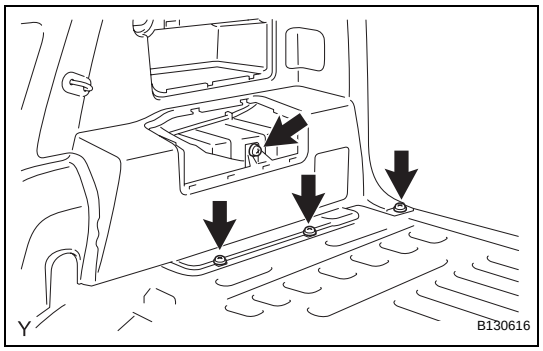

(2) Tighten the 4 screws.

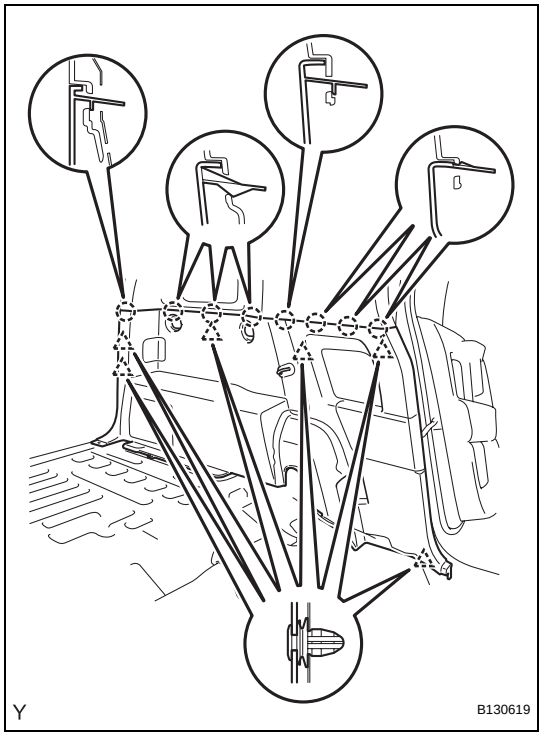

(b) for LH Side:

(1) Engage the 6 clips and the 8 claws and install the deck trim side panel.

SB

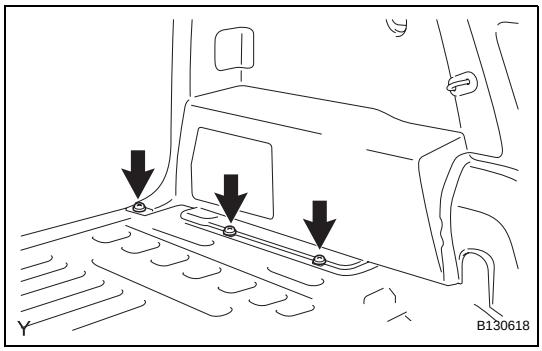

(2) Tighten the 3 screws.

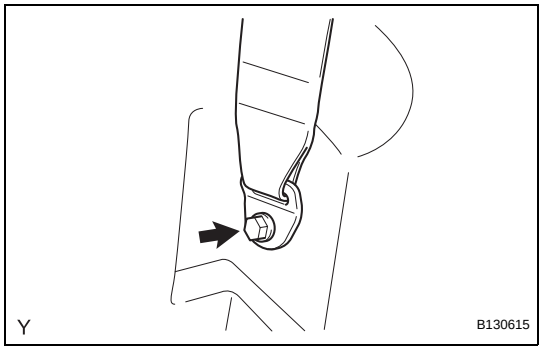

(c) Install the anchor plate with the bolt.
Torque: 42 N*m (430 kgf*cm, 31 ft.*lbf)
(d) Make sure that the shoulder anchor plate rotates smoothly.

4. INSTALL REAR DECK TRIM COVER (w/ Power Outlet Socket) (See page IR-40)

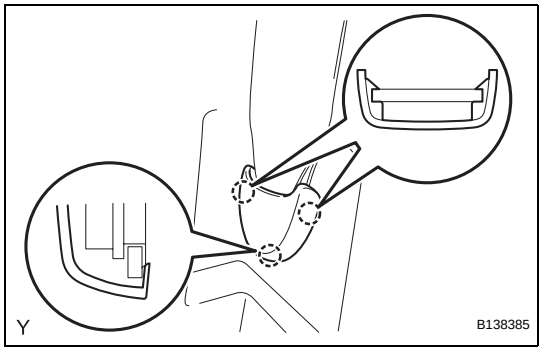

5. INSTALL LAP BELT OUTER ANCHOR COVER
(a) Engage the 3 claws and install the lap belt outer anchor cover.

6. INSTALL AMPLIFIER BOX SPEAKER ASSEMBLY (w/ Woofer) (See page AV-90)

7. INSTALL SPEAKER MOUNTING COVER (w/ Woofer) (See page AV-91)

8. INSTALL DECK SIDE GARNISH (w/ Woofer) (See page IR-41)

9. INSTALL QUARTER TRIM POCKET (w/o Woofer) (See page IR-41)

10. INSTALL SIDE TRIM COVER (w/o Woofer) (See page IR-42)

11. INSTALL QUARTER TRIM POCKET TRAY (w/o Woofer) (See page IR-42)

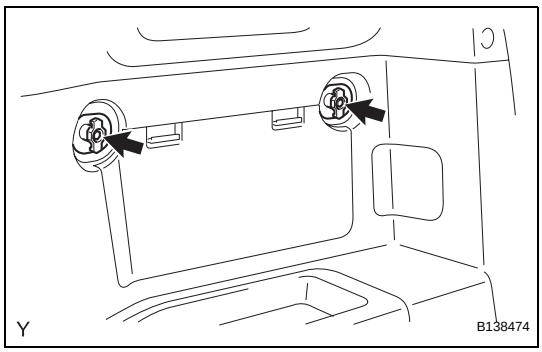

12. INSTALL PACKAGE HOLDER NET HOOK (w/o Woofer)
HINT:
Use the same procedure for both sides.
(a) Install the package holder net hook with the screw.

SB

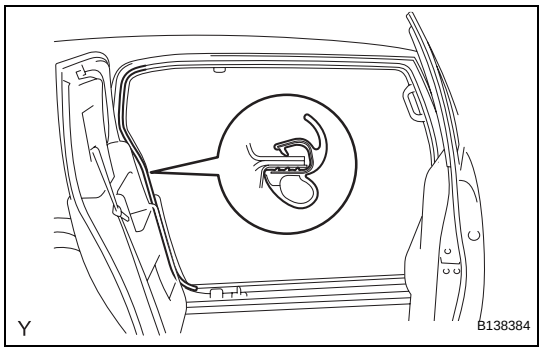

13. **INSTALL FRONT DOOR OPENING TRIM WEATHERSTRIP**
    (a) Install the front door opening trim weatherstrip.
14. **INSTALL ACCESS DOOR SCUFF PLATE (See page IR-45)**
15. **INSTALL FRONT DOOR SCUFF PLATE (See page IR-45)**
16. **INSTALL REAR FLOOR MAT ASSEMBLY (See page IR-46)**
17. **INSTALL LUGGAGE HOLD BELT STRIKER ASSEMBLY (See page IR-46)**
18. **INSTALL REAR FLOOR MAT SUPPORT PLATE (See page IR-46)**
19. **INSTALL REAR FLOOR BOARD (See page IR-47)**
20. **INSTALL REAR SEATBACK ASSEMBLY**
    (a) for RH Side:
        (1) Install the rear seatback assembly (See page SE-54).
    (b) for LH Side:
        (1) Install the rear seatback assembly (See page SE-38).
21. **INSTALL REAR SEATBACK BOARD CARPET ASSEMBLY**
    (a) for RH Side:
        (1) Install the rear seatback board carpet assembly (See page SE-54).
    (b) for LH Side:
        (1) Install the rear seatback board carpet assembly (See page SE-38).
22. **CONNECT CABLE TO NEGATIVE BATTERY TERMINAL**
    Torque: 3.9 N*m (40 kgf*cm, 35 in.*lbf)

SB

REAR CENTER SEAT INNER BELT ASSEMBLY

COMPONENTS

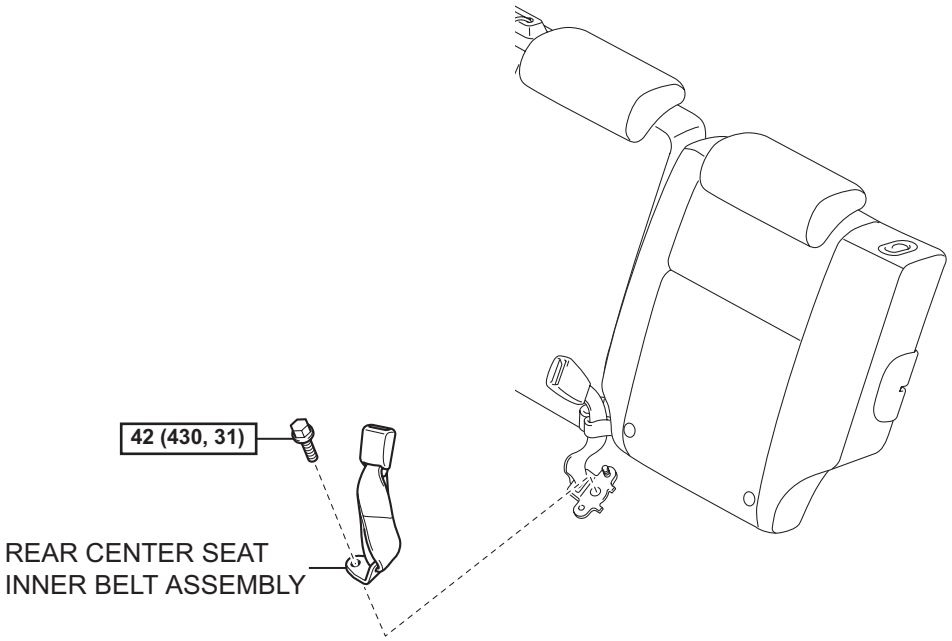

N*m (kgf*cm, ft*lbf) : Specified torque

Y

B135169E01

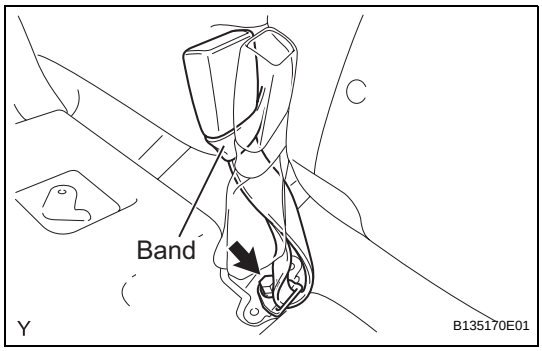

REMOVAL

1. REMOVE REAR CENTER SEAT INNER BELT ASSEMBLY

(a) Pull up the rear seat cushion.
(b) Remove the buckle from the rear seatback band.
(c) Remove the bolt and the rear center seat inner belt.

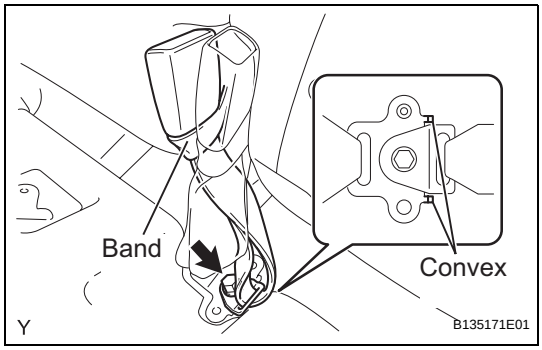

INSTALLATION

1. INSTALL REAR CENTER SEAT INNER BELT ASSEMBLY

(a) Install the anchor plate of the rear center seat inner belt with the bolt.
Torque: 42 N*m (430 kgf*cm, 31 ft.*lbf)
NOTICE:
Do not place the anchor plate over the convex areas of the rear seat inner belt.
(b) Install the buckle into the rear seatback band.
(c) Install the rear seat cushion.

REAR CENTER SEAT OUTER BELT ASSEMBLY

COMPONENTS

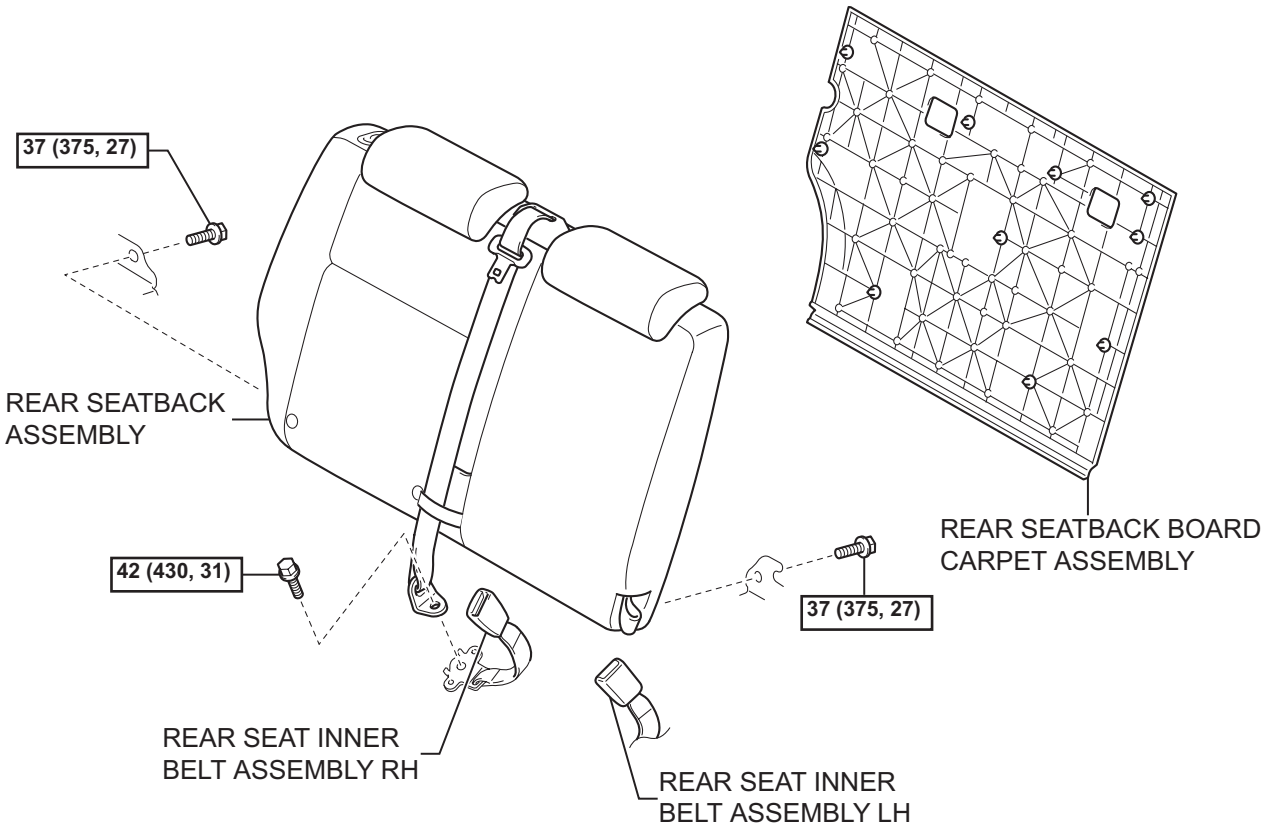

N*m (kgf*cm, ft*lbf) : Specified torque

Y

B138490E01

SB

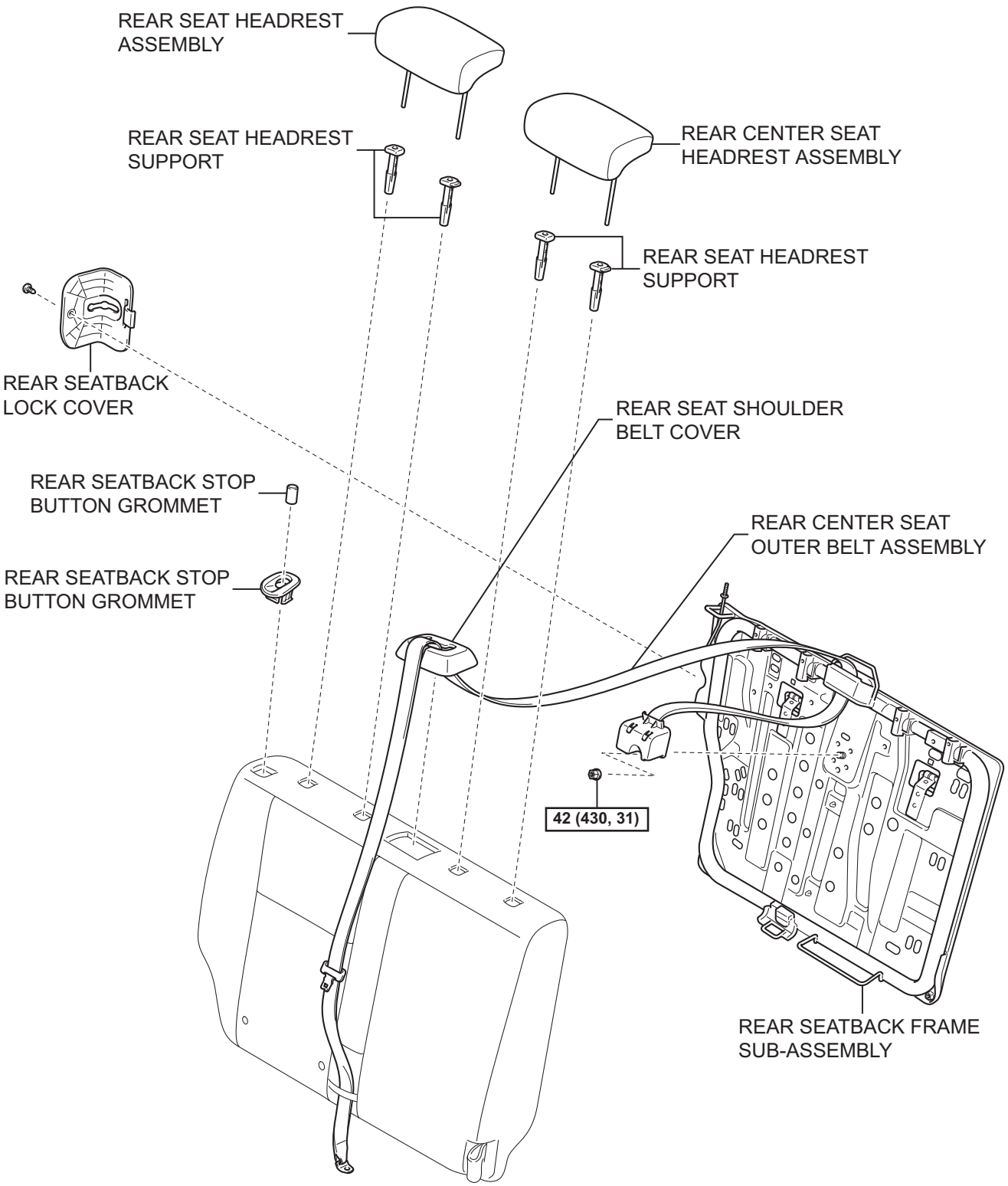

SB

N*m (kgf*cm, ft*lbf) : Specified torque

Y

B135153E01

REMOVAL

1. **REMOVE REAR SEATBACK BOARD CARPET ASSEMBLY (See page SE-43)**
2. **REMOVE REAR SEATBACK ASSEMBLY (See page SE-43)**
3. **REMOVE REAR SEAT HEADREST ASSEMBLY (See page SE-45)**
4. **REMOVE REAR CENTER SEAT HEADREST ASSEMBLY (See page SE-45)**
5. **REMOVE REAR SEAT SHOULDER BELT COVER (See page SE-45)**
6. **REMOVE REAR SEATBACK LOCK COVER (See page SE-45)**
7. **REMOVE REAR SEAT HEADREST SUPPORT (See page SE-46)**
8. **REMOVE REAR SEATBACK LOCK RELEASE BUTTON (See page SE-47)**
9. **REMOVE REAR SEATBACK STOP BUTTON GROMMET (See page SE-47)**
10. **REMOVE REAR SEATBACK FRAME SUB-ASSEMBLY (See page SE-47)**
11. **REMOVE REAR CENTER SEAT OUTER BELT ASSEMBLY**
    (a) Remove the nut and the rear center seat outer belt.

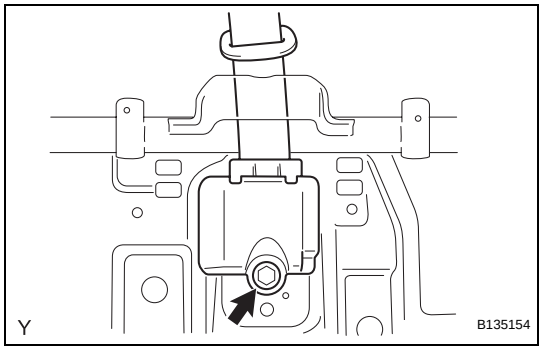

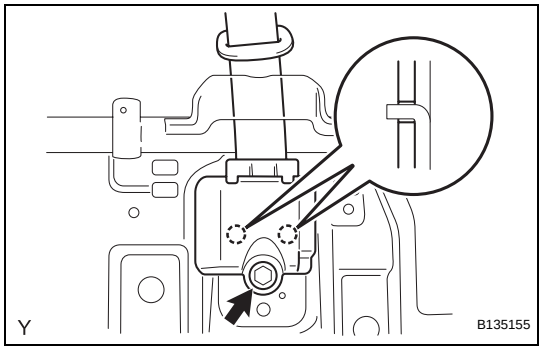

INSTALLATION

1. **INSTALL REAR CENTER SEAT OUTER BELT ASSEMBLY**
   (a) Hook the stay of the retractor onto the 2 rear seatback frame hooks and install the retractor with the nut.
   Torque: 42 N*m (430 kgf*cm, 31 ft.*lbf)
   (b) Check that the ELR locks.
   NOTICE:
   Perform the check with the front seat outer belt installed.
   (1) With the belt installed, check that the belt locks when it pulled out quickly.
   If the operation is not as specified, replace the rear seat outer belt.
2. **INSTALL REAR SEATBACK FRAME SUB-ASSEMBLY (See page SE-49)**

SB

3. **INSTALL REAR SEATBACK STOP BUTTON GROMMET (See page SE-50)**
4. **INSTALL REAR SEATBACK LOCK RELEASE BUTTON (See page SE-51)**
5. **INSTALL REAR SEAT HEADREST SUPPORT (See page SE-51)**
6. **INSTALL REAR SEATBACK LOCK COVER (See page SE-52)**
7. **INSTALL REAR SEAT SHOULDER BELT COVER (See page SE-52)**
8. **INSTALL REAR CENTER SEAT HEADREST ASSEMBLY (See page SE-52)**
9. **INSTALL REAR SEAT HEADREST ASSEMBLY (See page SE-52)**
10. **INSTALL REAR SEATBACK ASSEMBLY (See page SE-54)**
11. **INSTALL REAR SEATBACK BOARD CARPET ASSEMBLY (See page SE-54)**

STANDARD BOLT

HOW TO DETERMINE BOLT STRENGTH

Bolt Type

Hexagon Head Bolt			Stud Bolt	Weld Bolt	Class
Normal Recess Bolt		Deep Recess Bolt			
	No Mark 	No Mark 	No Mark 	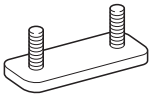	4T
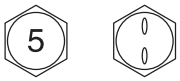					5T
	w/ Washer 	w/ Washer 			6T
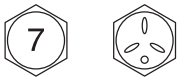		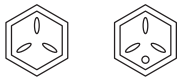			7T
					8T
					9T
					10T
					11T

SS

SPECIFIED TORQUE FOR STANDARD BOLTS

Class	Diameter (mm)	Pitch (mm)	Specified torque					
			Hexagon head bolt			Hexagon flange bolt		
			N*m	kgf*cm	ft.*lbf	N*m	kgf*cm	ft.*lbf
4T	6	1	5	55	48 in.*lbf	6	60	52 in.*lbf
	8	1.25	12.5	130	9	14	145	10
	10	1.25	26	260	19	29	290	21
	12	1.25	47	480	35	53	540	39
	14	1.5	74	760	55	84	850	61
	16	1.5	115	1,150	83	-	-	-
5T	6	1	6.5	65	56 in.*lbf	7.5	75	65 in.*lbf
	8	1.25	15.5	160	12	17.5	175	13
	10	1.25	32	330	24	36	360	26
	12	1.25	59	600	43	65	670	48
	14	1.5	91	930	67	100	1,050	76
	16	1.5	140	1,400	101	-	-	-
6T	6	1	8	80	69 in.*lbf	9	90	78 in.*lbf
	8	1.25	19	195	14	21	210	15
	10	1.25	39	400	29	44	440	32
	12	1.25	71	730	53	80	810	59
	14	1.5	110	1,100	80	125	1,250	90
	16	1.5	170	1,750	127	-	-	-
7T	6	1	10.5	110	8	12	120	9
	8	1.25	25	260	19	28	290	21
	10	1.25	52	530	38	58	590	43
	12	1.25	95	970	70	105	1,050	76
	14	1.5	145	1,500	108	165	1,700	123
	16	1.5	230	2,300	166	-	-	-
8T	8	1.25	29	300	22	33	330	24
	10	1.25	61	620	45	68	690	50
	12	1.25	110	1,100	80	120	1,250	90
9T	8	1.25	34	340	25	37	380	27
	10	1.25	70	710	51	78	790	57
	12	1.25	125	1,300	94	140	1,450	105
10T	8	1.25	38	390	28	42	430	31
	10	1.25	78	800	58	88	890	64
	12	1.25	140	1,450	105	155	1,600	116
11T	8	1.25	42	430	31	47	480	35
	10	1.25	87	890	64	97	990	72
	12	1.25	155	1,600	116	175	1,800	130

HOW TO DETERMINE NUT STRENGTH

Nut Type

Present Standard Hexagon Nut	Old Standard Hexagon Nut		Class
	Cold Forging Nut	Cutting Processed Nut	
No Mark 			4N
No Mark (w/ Washer) 	No Mark (w/ Washer) 	No Mark 	5N (4T)
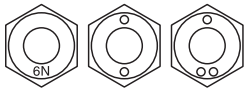			6N
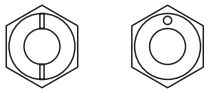 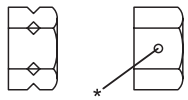			7N (5T)
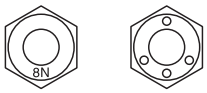			8N
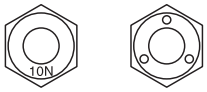	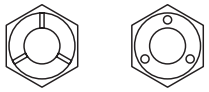	No Mark 	10N (7T)
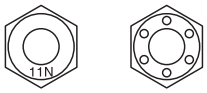			11N
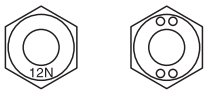			12N

HINT:

- *: Nut with 1 or more marks on one side surface of the nut.
- Use the nut with the same number of the nut strength classification or greater than the bolt strength classification number when tightening parts with a bolt and nut.

Example:

- Bolt = 4T
- Nut = 4N or more

1GR-FE ENGINE CONTROL SYSTEM

SERVICE DATA

SS

Camshaft timing oil control valve assembly	OCV OFF	Standard		Normal engine speed
	OCV ON			Rough idle or engine stalled
Throttle body	Throttle POS value	Standard		60 % or more
	Resistance	1 (M-) - 2 (M+)	Standard	0.3 to 100 Ω at 20°C (68°F)
Accelerator pedal position sensor (ACCEL POS#1)	Voltage	Accelerator pedal released	Standard	0.5 to 1.1 V
		Accelerator pedal depress		2.5 to 4.5 V
Accelerator pedal position sensor (ACCEL POS#2)	Voltage	Accelerator pedal released	Standard	1.2 to 2.0 V
		Accelerator pedal depress		3.4 to 5.0 V
Camshaft timing oil control valve assembly	Resistance	1 (+B) - 2 (GND)	Standard	6.9 to 7.9 Ω at 20°C (68°F)
Mass air flow meter			Standard	0.72 g/sec
Engine coolant temperature sensor	Resistance	1 (E2) - 2 (THW)	Standard	2.32 to 2.59 kΩ at 20°C (68°F)
				0.310 to 0.326 kΩ at 80°C (176°F)
Knock sensor	Resistance	1 (Ground) - 2 (Out put)		120 to 180 kΩ at 20°C (68°F)
Circuit opening relay	Resistance	3 - 5	Standard	10 kΩ or higher
				Below 1 Ω
		1 - 2		Below 1 Ω (Apply battery voltage to terminals 1 and 2)
EFI relay	Resistance	3 - 5	Standard	10 kΩ or higher
				Below 1 Ω (Apply battery voltage to terminals 1 and 2)
Crankshaft position sensor	Resistance	1 - 2	Standard	1,850 to 2,450 Ω at 20°C (68°F)
Fuel pump relay	Resistance	1 - 2	Standard	Below 1 Ω
		3 - 4		Below 1 Ω
		3 - 5		10 kΩ or higher
		3 - 4		10 kΩ or higher (Battery voltage applied to terminal 1 and 2)
		3 - 5		Below 1 Ω (Battery voltage applied to terminal 1 and 2)

TORQUE SPECIFICATIONS

Part Tightened	N*m	kgf*cm	ft.*lbf
Throttle with motor body assembly x Intake air surge tank	11	112	9
Air cleaner assembly x Cylinder head cover sub-assembly	8.0	82	71 in.*lbf
Air cleaner assembly x Intake air surge tank	8.0	82	71 in.*lbf
V-bank cover x Air cleaner assembly	7.5	76	66 in.*lbf
V-bank cover x Intake air surge tank	7.5	76	66 in.*lbf
Knock sensor x Cylinder block sub-assembly	20	204	15
Water outlet pipe No. 1 x Cylinder block sub-assembly	9.0	92	80 in.*lbf
Camshaft timing oil control valve x Cylinder head	9.0	92	80 in.*lbf
E.F.I. engine coolant temperature sensor x Cylinder block	20	204	15
Manifold stay x Exhaust manifold	40	408	30
Manifold stay x Transmission	40	408	30
Cool air inlet No. 1 x Body	12	122	9.0
ECM bracket x ECM	3	32	28 in.*lbf
ECM bracket No. 2 x ECM	3	32	28 in.*lbf
ECM x Body	13	133	10

1GR-FE ENGINE MECHANICAL

SERVICE DATA

Ignition timing		Terminals TC and CG of DLC3 connected	8 to 12° BTDC @ idle (Transmission in neutral position)
		Terminals TC and CG of DLC3 disconnected	7 to 24° BTDC @ idle (Transmission in neutral position)
Idle speed			650 to 750 rpm (Transmission in neutral position)
Compression		Compression pressure	1,300 kPa (13.3 kgf/cm^2, 189 psi) or more
		Minimum pressure	1,000 kPa (10.2 kgf/cm^2, 145 psi)
		Difference between each cylinder	100 kPa (1.0 kgf/cm^2, 15 psi) or less
Valve clearance	Intake	(cold)	0.15 to 0.25 mm (0.006 to 0.010 in.)
	Exhaust		0.29 to 0.39 mm (0.011 to 0.015 in.)
Intake manifold	Intake air surge tank side warpage	Maximum	0.8 mm (0.031 in.)
	Cylinder head side warpage		0.2 mm (0.008 in.)
Exhaust manifold	Warpage	Maximum	0.7 mm (0.028 in.)
Camshaft timing gear assembly	Diameter (with chain)	Large gear	115.5 mm (4.547 in.)
		Small gear	73.1 mm (2.878 in.)
Camshaft timing gear or sprocket	Diameter (with chain)		73.1 mm (2.878 in.)
Crankshaft timing gear or sprocket	Diameter (with chain)		61.0 mm (2.402 in.)
Idle sprocket	Diameter (with chain)		61.0 mm (2.402 in.)
Cylinder head set bolt	Outer diameter	Standard	10.85 to 11.00 mm (0.4272 to 0.4331 in.)
		Minimum	10.7 mm (0.421 in.)
Chain sub-assembly	Length	Maximum	146.8 mm (5.780 in.)
No. 2 chain sub-assembly	Length	Maximum	146.8 mm (5.780 in.)
Idle gear shaft	Diameter		22.987 to 23.000 mm (0.9050 to 0.9055 in.)
	Internal diameter		23.02 to 23.03 mm (0.9063 to 0.9067 in.)
	Oil clearance	Standard	0.020 to 0.043 mm (0.0008 to 0.0017 in.)
		Maximum	0.093 mm (0.0037 in.)
Chain tensioner assembly No. 2	Wear	Maximum	1.0 mm (0.039 in.)
Chain tensioner assembly No. 3	Wear	Maximum	1.0 mm (0.039 in.)
Chain tensioner slipper	Wear	Maximum	1.0 mm (0.039 in.)
Chain vibration damper No. 1	Wear	Maximum	1.0 mm (0.039 in.)
Chain vibration damper No. 2	Wear	Maximum	1.0 mm (0.039 in.)
Cylinder head sub-assembly	Warpage	Maximum	0.10 mm (0.0039 in.)
Intake valve	Valve stem diameter		5.470 to 5.485 mm (0.2154 to 0.2159 in.)
	Valve face angle		45.5°
	Margin thickness	Standard	1.0 mm (0.039 in.)
		Minimum	0.5 mm (0.020 in.)
	Overall length	Standard	106.95 mm (4.2106 in.)
		Minimum	106.70 mm (4.2008 in.)

Exhaust valve	Valve stem diameter			5.465 to 5.480 mm (0.2152 to 0.2158 in.)
	Valve face angle			45.5°
	Margin thickness		Standard	1.0 mm (0.039 in.)
			Minimum	0.5 mm (0.020 in.)
	Overall length		Standard	105.80 mm (41654 in.)
			Minimum	105.55 mm (4.1555 in.)
Inner compression spring	Deviation		Maximum	2.0 mm (0.079 in.)
	Free length		Maximum	47.80 mm (1.8819 in.)
	Tension	at 33.3 mm (1.311 in.)		186.2 to 205.8 N (19.0 to 21.0 kgf, 41.9 to 46.3 lbf)
Intake valve guide bush	Inside diameter			5.51 to 5.53 mm (0.2169 to 0.2177 in.)
	Oil clearance		Standard	0.025 to 0.060 mm (0.0010 to 0.0024 in.)
			Maximum	0.08 mm (0.0031 in.)
	Bore diameter			10.295 to 10.315 mm (0.4053 to 0.4061 in.)
	Protrusion height			9.3 to 9.7 mm (0.366 to 0.382 in.)
Exhaust valve guide bush	Inside diameter			5.51 to 5.53 mm (0.2169 to 0.2177 in.)
	Oil clearance		Standard	0.030 to 0.065 mm (0.0012 to 0.0026 in.)
			Maximum	0.10 mm (0.0039 in.)
	Bore diameter			10.295 to 10.315 mm (0.4053 to 0.4061 in.)
	Protrusion height			9.3 to 9.7 mm (0.366 to 0.382 in.)
Valve lifter	Diameter			30.966 to 30.976 mm (1.2191 to 1.2195 in.)
	Bore diameter			31.009 to 31.025 mm (1.2208 to 1.2215 in.)
	Oil clearance		Standard	0.033 to 0.059 mm (0.0013 to 0.0023 in.)
			Maximum	0.08 mm (0.0031 in.)
No. 1 camshaft	Journal diameter		No. 1 journal	35.971 to 35.985 mm (1.4162 to 1.4167 in.)
			Other journals	22.959 to 22.975 mm (0.9039 to 0.9045 in.)
	Circle runout		Maximum	0.06 mm (0.0024 in.)
	Cam lobe height		Standard	44.168 to 44.268 mm (1.7389 to 1.7428 in.)
			Minimum	44.018 mm (1.7330 in.)
	Oil clearance	No. 1 journal	Standard	0.008 to 0.038 mm (0.0003 to 0.0015 in.)
			Other journals	0.025 to 0.062 mm (0.0010 to 0.0024 in.)
		No. 1 journal	Maximum	0.07 mm (0.0028 in.)
			Other journals	0.10 mm (0.0039 in.)
	Thrust clearance		Standard	0.04 to 0.09 mm (0.016 to 0.035 in.)
			Maximum	0.11 mm (0.0043 in.)
No. 2 camshaft	Journal diameter		No. 1 journal	35.971 to 35.985 mm (1.4162 to 1.4167 in.)
			Other journals	22.959 to 22.975 mm (0.9039 to 0.9045 in.)
	Circle runout		Maximum	0.06 mm (0.0024 in.)
	Cam lobe height		Standard	44.580 to 44.680 mm (1.7551 to 1.7591 in.)
			Minimum	44.430 mm (1.7492 in.)
	Oil clearance	No. 1 journal	Standard	0.040 to 0.079 mm (0.0016 to 0.0031 in.)
			Other journals	0.025 to 0.062 mm (0.0010 to 0.0024 in.)
			Maximum	0.10 mm (0.0039 in.)
	Thrust clearance		Standard	0.04 to 0.09 mm (0.016 to 0.035 in.)
			Maximum	0.11 mm (0.0043 in.)

SS

No. 3 camshaft sub-assembly	Journal diameter		No. 1 journal	35.971 to 35.985 mm (1.4162 to 1.4167 in.)
			Other journals	22.959 to 22.975 mm (0.9039 to 0.9045 in.)
	Circle runout		Maximum	0.06 mm (0.0024 in.)
	Cam lobe height		Standard	44.168 to 44.268 mm (1.7389 to 1.7428 in.)
			Minimum	44.018 mm (1.7330 in.)
	Oil clearance	No. 1 journal	Standard	0.008 to 0.038 mm (0.0003 to 0.0015 in.)
			Other journals	0.025 to 0.062 mm (0.0010 to 0.0024 in.)
			Maximum	0.10 mm (0.0039 in.)
	Thrust clearance		Standard	0.04 to 0.09 mm (0.016 to 0.035 in.)
			Maximum	0.11 mm (0.0043 in.)
No. 4 camshaft sub-assembly	Journal diameter		No. 1 journal	35.971 to 35.985 mm (1.4162 to 1.4167 in.)
			Other journals	22.959 to 22.975 mm (0.9039 to 0.9045 in.)
	Circle runout		Maximum	0.06 mm (0.0024 in.)
	Cam lobe height		Standard	44.580 to 44.680 mm (1.7551 to 1.7591 in.)
			Minimum	44.430 mm (1.7492 in.)
	Oil clearance	No. 1 journal	Standard	0.040 to 0.079 mm (0.0016 to 0.0031 in.)
			Other journals	0.025 to 0.062 mm (0.0010 to 0.0024 in.)
			Maximum	0.10 mm (0.0039 in.)
	Thrust clearance		Standard	0.04 to 0.09 mm (0.016 to 0.035 in.)
			Maximum	0.11 mm (0.0043 in.)
Ring pin for cylinder head sub-assembly and cylinder head LH	Protrusion height			2.7 to 3.3 mm (0.106 to 0.130 in.)
Straight pin for cylinder head sub-assembly and cylinder head LH	Protrusion height		A	17.5 to 19.5 mm (0.689 to 0.768 in.)
			B	7.5 to 8.5 mm (0.295 to 0.335 in.)
			C	7.0 to 9.0 mm (0.276 to 0.354 in.)
Tight plug for cylinder head sub-assembly and cylinder head LH	Depth			1.5 mm (0.059 in.)
Connecting rod	Thrust clearance		Standard	0.15 to 0.30 mm (0.0059 to 0.0118 in.)
			Maximum	0.35 mm (0.0138 in.)
	Oil clearance		Standard	0.026 to 0.046 mm (0.0010 to 0.0018 in.)
			Maximum	0.066 mm (0.0025 in.)
Crankshaft thrust clearance			Standard	0.04 to 0.24 mm (0.0016 to 0.0094 in.)
			Maximum	0.30 mm (0.0118 in.)
Cylinder block warpage			Maximum	0.05 mm (0.0020 in.)
Cylinder bore diameter			Standard	94.000 to 94.012 mm (3.7008 to 3.7013 in.)
			Maximum	94.132 mm (3.7060 in.)
Piston	Diameter			93.910 to 93.940 mm (3.6972 to 3.6984 in.)
	Oil clearance		Standard	0.060 to 0.102 mm (0.0031 to 0.0040 in.)
			Maximum	0.13 mm (0.0051 in.)
Connecting rod out-of alignment			Maximum	0.05 mm (0.0020 in.) per 100 mm (3.94 in.)
Connecting rod twist			Maximum	0.15 mm (0.0059 in.) per 100 mm (3.94 in.)
Connecting rod bushing	Internal diameter			22.005 to 22.014 mm (0.8662 to 0.8665 in.)
Piston pin	Diameter			21.997 to 22.006 mm (0.8660 to 0.8664 in.)
Oil clearance			Standard	0.005 to 0.011 mm (0.0002 to 0.0004 in.)
			Maximum	0.050 mm (0.0020 in.)
Piston ring	Groove clearance		No. 1	0.02 to 0.07 mm (0.0008 to 0.0028 in.)
			No. 2	0.02 to 0.06 mm (0.0008 to 0.0024 in.)
			Oil	0.07 to 0.15 mm (0.0028 to 0.0060 in.)

Piston pin	Internal diameter			22.001 to 22.010 mm (0.8662 to 0.8665 in.)
Piston ring	End gap	No. 1	Standard	0.30 to 0.40 mm (0.0118 to 0.0157 in.)
		No. 2		0.40 to 0.50 mm (0.0157 to 0.0197 in.)
		Oil (Side rail)		0.10 to 0.40 mm (0.0039 to 0.0157 in.)
		No. 1	Maximum	1.0 mm (0.039 in.)
		No. 2		1.1 mm (0.043 in.)
		Oil (Side rail)		1.0 mm (0.039 in.)
Connecting rod bolt	Diameter		Standard	7.2 to 7.3 mm (0.283 to 0.287 in.)
			Minimum	7.0 mm (0.276 in.)
	Thrust clearance		Standard	0.15 to 0.30 mm (0.0059 to 0.0118 in.)
			Minimum	0.35 mm (0.0138 in.)
Crankshaft bearing cap set bolt	Diameter		Standard	10.0 to 10.2 mm (0.393 to 0.402 in.)
Crankshaft	Circle runout		Maximum	0.06 mm (0.0024 in.)
Main journal	Diameter			71.988 to 72.000 mm (2.8342 to 2.8346 in.)
Main journal	Taper and out-of-round		Maximum	0.02 mm (0.0008 in.)
Crank pin	Diameter			55.992 to 56.000 mm (2.2044 to 2.2047 in.)
Crank pin	Taper and out-of-round		Maximum	0.02 mm (0.0008 in.)
Crankshaft	Oil clearance		Standard	0.018 to 0.030 mm (0.0007 to 0.0012 in.)
			Maximum	0.046 mm (0.0018 in.)
	Thrust clearance			0.04 to 0.24 mm (0.0016 to 0.0094 in.)
			Maximum	0.30 mm (0.0018 in.)
Straight pin	Protrusion	Pin A	Standard	22.5 to 23.5 mm (0.886 to 0.925 in.)
		Pin B		10.5 to 11.5 mm (0.413 to 0.453 in.)
		Pin C		8.5 to 9.5 mm (0.335 to 0.374 in.)
		Pin D		5.5 to 6.5 mm (0.217 to 0.256 in.)

TORQUE SPECIFICATIONS

Part Tightened		N*m	kgf*cm	ft.*lbf
No. 1 Engine under cover sub-assembly x Frame assembly		29	296	21
Camshaft bearing cap x Cylinder head sub-assembly	10 mm (0.39 in.) head	9.0	92	80 in.*lbf
	12 mm (0.47 in.) head	24	245	18
No. 1 chain tensioner x Cylinder head sub-assembly		10	102	7
No. 2 chain tensioner x Cylinder head sub-assembly		19	194	14
No. 3 chain tensioner x Cylinder head sub-assembly		19	194	14
Camshaft timing gear assembly x Camshaft		100	1,020	74
Camshaft timing gear or sprocket x Camshaft		100	1,020	74
Timing chain cover plate x Timing chain or belt cover sub-assembly		9.0	92	80 in.*lbf
Ignition coil assembly x Cylinder head cover sub-assembly		10	102	7
V-bank cover x Intake air surge tank		7.5	76	66 in.*lbf
Engine hanger No. 1 x Cylinder head sub-assembly RH		33	336	24
Engine hanger No. 2 x Cylinder head sub-assembly LH		33	336	24
Spark plug x Cylinder head sub-assembly		20	204	15
Oil filler cap housing x Cylinder head cover sub-assembly LH		9.0	92	80 in.*lbf
Camshaft timing oil control valve assembly x Cylinder head cover sub-assembly		9.0	92	80 in.*lbf
Oil filter bracket sub-assembly x Timing chain or belt cover sub-assembly		19	194	14
No. 1 engine mounting bracket front RH x Cylinder block sub-assembly		43	435	31
No. 1 engine mounting bracket front LH x Cylinder block sub-assembly		43	435	31
No. 1 engine mounting insulator front RH x Frame assembly		38	387	28
No. 1 engine mounting insulator front LH x Frame assembly		38	387	28
Engine wire No. 2 (ground cable) x Cylinder block sub-assembly		13	133	9
Hood sub-assembly x Hood hinge assembly RH and LH		18	184	13
Knock sensor x Cylinder block sub-assembly		20	204	15
No. 1 water outlet pipe x Cylinder block sub-assembly		10	102	7
Cylinder head sub-assembly RH x Cylinder block sub-assembly	1st	36	367	27
	2nd	Turn 180°	Turn 180°	Turn 180°
Cylinder head sub-assembly LH x Cylinder block sub-assembly	Recessed head 1st	36	367	27
	2nd	Turn 180°	Turn 180°	Turn 180°
	14 mm (0.55 in.) head	30	306	22
No. 1 chain vibration damper x Cylinder block sub-assembly		19	194	14
No. 1 idle gear x Cylinder block sub-assembly		60	612	44
Timing chain or belt cover sub-assembly x Cylinder head and block		23	235	17
Water pump assembly x Timing chain or belt cover sub-assembly	Bolt A	9.0	92	80 in.*lbf
	Bolt B	23	235	17
Oil pan stud bolt x Oil pan sub-assembly		4.0	41	35 in.*lbf
Oil pan sub-assembly x Cylinder block and timing chain or belt cover	10 mm (0.39 in.) head	10	102	7
	12 mm (0.47 in.) head	21	214	16
Oil strainer sub-assembly x Oil pan sub-assembly		9.0	92	80 in.*lbf

Part Tightened		N*m	kgf*cm	ft.*lbf
No. 2 oil pan sub-assembly x Oil pan sub-assembly	Nut	1.0	102	7
	Bolt	9.0	92	80 in.*lbf
Oil pan drain plug x No. 2 oil pan sub-assembly		40	408	30
Crankshaft pulley x Crankshaft		250	2,549	185
Cylinder head cover sub-assembly x Cylinder head sub-assembly RH	Nut	9.0	92	80 in.*lbf
	Bolt A	10	102	7
	Bolt B	9.0	92	80 in.*lbf
Cylinder head cover sub-assembly LH x Cylinder head sub-assembly LH	Nut	9.0	92	80 in.*lbf
	Bolt A	10	102	7
	Bolt B	9.0	92	80 in.*lbf
Ventilation valve x Cylinder head cover sub-assembly LH		27	275	20
Oil control valve filter plug x Cylinder head sub-assembly		62	632	46
Crankshaft position sensor x Cylinder block sub-assembly		10	102	7.4
VVT sensor x Timing chain or belt cover sub-assembly		8.0	82	71 in.*lbf
Cylinder block water drain cock sub-assembly x Cylinder block sub-assembly		25	255	18
Oil level gauge guide x Cylinder head sub-assembly		9.0	92	80 in.*lbf
Oil pan sub-assembly x Transmission		37	377	27
No. 1 idler pulley sub-assembly x Timing chain or belt cover sub-assembly		54	551	40
No. 2 idler pulley sub-assembly x Timing chain or belt cover sub-assembly		39	398	29
V-ribbed belt tensioner assembly x Cylinder block sub-assembly		36	367	27
Vane pump assembly x Cylinder block sub-assembly		43	438	32
Intake air surge tank x Intake manifold		28	286	21
Surge tank stay x Intake air surge tank and cylinder head		21	214	15
Throttle body bracket x Throttle body with motor and cylinder head		21	214	15
Oil baffle plate x Surge tank stay No. 1		9.0	92	80 in.*lbf
Ground cable x Cylinder head sub-assembly		8.0	82	71 in.*lbf
Water by-pass joint RR x Cylinder head sub-assembly		9.0	92	80 in.*lbf
Intake manifold x Cylinder head sub-assembly		26	265	19
Exhaust manifold sub-assembly RH x Cylinder head sub-assembly RH		30	306	22
Exhaust manifold sub-assembly LH x Cylinder head sub-assembly LH		30	306	22
Manifold stay x Exhaust manifold sub-assembly RH and transmission		40	408	30
No. 2 manifold stay x Exhaust manifold sub-assembly LH and transmission		40	408	30
No. 1 cool air inlet x Body		12	122	9
Drive plate and ring gear sub-assembly x Crankshaft		83	846	61
Flywheel x Crankshaft		83	846	61
Stud bolt x Cylinder head sub-assembly and cylinder head LH	A	4.0	41	35 in.*lbf
	B	9.0	92	80 in.*lbf
	C	4.0	41	35 in.*lbf
Union x Cylinder head sub-assembly and cylinder head LH		15	150	11
With Head taper screw plug x Cylinder head sub-assembly and cylinder head LH		80	816	59
Connecting rod cap x Connecting rod	1st	25	250	18
	2nd	Turn 90°	urn 90°	urn 90°
Main bearing cap x Cylinder block sub-assembly	12 pointed head 1st	61	622	45
	2nd	urn 90°	urn 90°	urn 90°
	12 mm head	25	255	18

SS

Part Tightened		N*m	kgf*cm	ft.*lbf
Stud bolt x Cylinder block sub-assembly	A	11	112	8.1
	B	4.5	46	40 in.*lbf
	C	4.0	41	35 in.*lbf
	D	4.0	41	35 in.*lbf
No. 1 sub-assembly oil nozzle x Cylinder block sub-assembly		9.0	92	80 in.*lbf
Negative battery terminal		3.9	40	35 in.*lbf
Exhaust front pipe x Exhaust manifold		54	554	40
Exhaust center pipe x Exhaust front		43	438	32
No. 2 front exhaust pipe x Exhaust manifold	Nut	54	554	40
	Bolt	48	489	35
Exhaust pipe stopper bracket x Frame assembly		19	193	14
Ground wire x Body		8.4	85	74 in.*lbf
Rear engine oil seal retainer x Cylinder block sub-assembly	Nut	9.0	92	80 in.*lbf
	Bolt	10	102	7.4
Water inlet x Cylinder head sub-assembly		9.0	92	80 in.*lbf
Thermostat water inlet sub-assembly x Water inlet		9.0	92	80 in.*lbf
Engine oil pressure switch x Oil filter bracket sub-assembly		15	153	11
Oil filter union x Oil filter bracket		30	306	22
Oil filter sub-assembly x Oil filter bracket		18	184	13
Water temperature sensor x Water by-pass joint RR		20	200	14

1GR-FE FUEL

SERVICE DATA

Fuel pressure			281 to 287 kPa (2.87 to 2.93 kgf*cm^2, 40.8 to 41.7 psi)
Fuel pressure			147 kPa (1.5 kgf*cm^2, 21 psi) or more
Fuel injector	Resistance	at 20°C (68°F)	11.6 to 12.4 Ω
	Injection volume		76 to 91 cm^2 (4.6 to 5.5 cu in.) per 15 seconds
	Difference between each cylinder		15 cm^3 (0.9 cu in.) or less
	Fuel leakage		1 drop or less every 12 minutes
Fuel pump resister	Resistance	at 20°C (68°F)	0.941 to 0.999 Ω
Fuel Pump	Resistance	at 20°C (68°F)	0.2 to 3.0 Ω

TORQUE SPECIFICATIONS

Part Tightened	N*m	kgf*cm	ft.*lbf
Fuel tank band x Body	40	408	30
No. 1 fuel tank protector sub-assembly x Fuel tank band	20	204	15
Fuel tank protector bracket x Body	5.5	56	49 in.*lbf
Fuel delivery pipe sub-assembly x Intake manifold	15	153	11
Intake air surge tank x Intake manifold	28	286	21
Intake air surge tank x Throttle body bracket	21	214	16
Intake air surge tank x No. 1 surge tank stay	21	214	16
Intake air surge tank x No. 2 surge tank stay	21	214	16
Fuel pressure regulator assembly x Fuel delivery pipe sub-assembly	9.0	92	80 in.*lbf
Negative battery terminal	3.9	40	35 in.*lbf
No. 1 surge tank stay x Oil baffle plate	9.0	92	80 in.*lbf
Fuel pump resister x Body	8.5	87	75 in.*lbf
No. 3 fuel tank protector x Fuel tank	5.0	51	44 in.*lbf

1GR-FE EMISSION CONTROL

SERVICE DATA

Air-fuel ratio compensation system	Voltage	Standard	B2 - B22 (A1A+) - B3 - 1 (E1)	3.3 V
			B2 - 23 (A2A+) - B3 - 1 (E1)	3.3 V
			B2 - 22 (A1A-) - B3 - (E1)	2.9 V
			B2 - 31 (A2A-) - B3 - (E1)	2.9 V
Fuel cut off rpm	Cut off			2,500 rpm
	Return			1,200 rpm
Lead detection pump	Voltage	Standard	A23 (VC) - A28 (E2)	4.5 to 5.5 V
			E22 (PPMP) - A28 (E2)	1.425 to 4.150 V
vacuum Switching Valve	Resistance	Standard	1 - Body	10 MΩ or higher at 20°C (68°F)
			2 - Body	10 MΩ or higher at 20°C (68°F)
Air fuel ratio sensor (Bank 1, Bank 2)	Resistance	Standard	1 (HT) - 2 (+B)	1.8 to 3.4 Ω at 20°C (68°F)
			1 (HT) - 4 (E1)	10 kΩ or higher
Heated oxygen sensor No. 2 (Bank 1, Bank 2)	Resistance	Standard	1 (HT) - 2 (+B)	11 to 16 Ω at 20°C (68°F)
			1 (HT) - 4 (E1)	10 kΩ or higher

TORQUE SPECIFICATIONS

Part Tightened	N*m	kgf*cm	ft.*lbf
Duty vacuum switching valve x Intake air surge tank	9.0	92	80 in.*lbf
Ventilation valve x Cylinder head cover	27	275	20
Heated oxygen sensor x Exhaust pipe	44	449	33
Air fuel ratio sensor x Exhaust manifold	44	449	33
Negative battery terminal	3.9	40	35 in.*lbf
Charcoal canister x Body	20	204	15

1GR-FE INTAKE

SERVICE DATA

No. 1 vacuum switching valve assembly	Resistance	Standard	1 - 2	33 to 39 Ω at 20°C (68°F)
			1 - Body	10 kΩ or higher
			2 - Body	10 kΩ or higher

TORQUE SPECIFICATIONS

Part Tightened	N*m	kgf*cm	ft.*lbf
No. 1 vacuum switching valve assembly x Intake air surge tunk	9.0	92	80 in.*lbf
V-bank cover x Air cleaner assembly	7.5	76	66 in.*lbf
Air cleaner assembly x Intake air surge tunk	8.0	82	71 in.*lbf
Negative battery terminal	3.9	40	35 in.*lbf

1GR-FE EXHAUST

SERVICE DATA

Compression spring	Length	Minimum	40.5 mm (1.594 in.)

TORQUE SPECIFICATIONS

Part Tightened		N*m	kgf*cm	ft.*lbf
Exhaust pipe assembly front x Exhaust manifold		54	554	40
Exhaust front pipe assembly No. 2 x Exhaust pipe assembly center	Bolt	48	489	35
	Nut	54	554	40
Exhaust pipe assembly center x Tail pipe		48	490	35
Heated oxygen sensor x Exhaust pipe assembly front		43	438	32
Heated oxygen sensor x Exhaust front pipe assembly No. 2		43	438	32
Negative battery terminal		3.9	40	35 in.*lbf
Exhaust pipe stopper bracket x Body		19	193	14

1GR-FE COOLING

SERVICE DATA

Water inlet with thermostat	Valve opening temperature		80 to 84 °C (176 to 183 °F)
	Valve lift		8 mm (0.31 in.) or more at 95 °C (203 °F)
Radiator cap	Relief valve opening pressure	Standard	93 to 123 kPa (0.95 to 1.25 kgf/cm^2, 13.5 to 17.8 psi)
		Minimum	78 kPa (0.8 kgf/cm^2, 11.4 psi)

TORQUE SPECIFICATIONS

Part Tightened		N*m	kgf*cm	ft.*lbf
Cylinder block water drain cock plug x Cylinder block water drain cock		13	130	9
Water pump assembly x Timing chain or belt cover sub-assembly	Bolt A	9.0	92	80 in.*lbf
	Bolt B	23	235	17
Idler pulley sub-assembly No. 2 x Timing chain or belt cover sub-assembly		39	398	29
Water inlet x Timing chain or belt cover sub-assembly		9.0	92	80 in.*lbf
Fan shroud x Radiator		5.0	51	44 in.*lbf
Fan x Fluid coupling		9.0	92	80 in.*lbf
Fan with fluid coupling x Water pump		21	214	15
Reserve tank x Radiator		5.0	51	44 in.*lbf
V-bank cover x Intake air surge tank		7.5	76	66 in.*lbf
Engine under cover sub-assembly No. 1 x Frame assembly		29	296	21
Water inlet with thermostat x Water inlet		9.0	92	80 in.*lbf
Radiator x Radiator support		21	184	44
Negative battery terminal		3.9	40	35 in.*lbf

1GR-FE LUBRICATION

SERVICE DATA

Oil pressure		at idle speed	29 kPa (0.3 kgf/cm^2, 4.2 psi) or more
		at 3,000 rpm	294 to 588 kPa (3.0 to 6.0 kgf/cm^2, 43 to 85 psi)
Oil pump	Tip clearance	Standard	0.06 to 0.16 mm (0.0024 to 0.0063 in.)
		Maximum	0.16 mm (0.0063 in.)
	Side clearance	Standard	0.03 to 0.09 mm (0.0012 to 0.0035 in.)
		Maximum	0.09 mm (0.0035 in.)
	Body clearance	Standard	0.250 to 0.325 mm (0.0098 to 0.0128 in.)
		Maximum	0.325 mm (0.0128 in.)

TORQUE SPECIFICATIONS

Part Tightened	N*m	kgf*cm	ft.*lbf
Oil pressure switch x Oil filter bracket sub-assembly	15	153	11
Oil pan drain plug x Oil pan sub-assembly No. 2	40	408	30
Timing chain or belt cover sub-assembly x Cylinder head and block	23	235	17
Oil filter bracket sub-assembly x Timing chain or belt cover sub-assembly	19	194	14
V-bank cover x Intake air surge tank	7.5	76	66 in.*lbf
Oil pump relief valve x Oil pump cover	49	500	36
Oil pump cover x Timing chain or belt cover sub-assembly	9.0	92	80 in.*lbf
Oil cooler assembly x Oil filter bracket sub-assembly	68	693	50
Oil filter sub-assembly	18	184	13

1GR-FE IGNITION

SERVICE DATA

Spark plug	Recommended spark plug	DENSO mad	K20HR-U11
		NGK made	LFR6C-11
	Electrode gap		1.0 to 1.1 mm (0.039 to 0.043 in.)
	Maximum electrode gap		1.46 mm (0.057 in.)
Crankshaft position sensor	Resistance	at 20°C (68°F)	1,850 to 2,450 Ω

TORQUE SPECIFICATIONS

Part Tightened	N*m	kgf*cm	ft.*lbf
Ignition coil x Cylinder head cover	10	102	7.4
V-bank cover x Intake air surge tank sub-assembly and Air cleaner assembly	7.5	76	66 in.*lbf
Negative battery terminal	3.9	40	35 in.*lbf

1GR-FE STARTING

SERVICE DATA

Starter	Current	Standard		100A or less at 11.5 V
Starter armature assembly	Circle runout	Maximum		0.05 mm (0.0020 in.)
	Commutator diameter	Standard		35.0 mm (1.378 in.)
		Minimum		34.0 mm (1.339 in.)
	Undercut depth	Standard		0.7 mm (0.028 in.)
		Minimum		0.2 mm (0.008 in.)
	Commutator resistance	Standard		Below 1 Ω
Starter yoke	Resistance	Standard	Lead wire-brush	Below 1 Ω
	Shunt coil resistance		Terminal A - B	1.5 to 1.9 Ω at 20°C (68°F)
Brush	Length	Standard		15.0 mm (0.591 in.)
		Minimum		9.0 mm (0.354 in.)
Starter brush holder assembly	Brush spring lead	Standard		21.5 to 27.5 N (2.2 to 2.8 kgf, 4.8 to 6.2 lbf)
		Minimum		12.7 N (1.3 kgf, 2.9 lbf)
Starter relay assembly	Resistance	Standard	3 - 5	10 kΩ or higher
				Below 1 Ω (apply battery voltage to terminal 1 and 2)
Ignition switch assembly	Resistance	Standard		10 kΩ or higher (Lock)
			1 (AM1) - 3 (ACC)	Below 1 Ω (ACC)
			1 (AM1) - 3 (ACC) - 4 (IG1)	Below 1 Ω (ON)
			7 (IG2) - 8 (AM2)	Below 1 Ω (ON)
			1 (AM1) - 2 (ST1) - 4 (IG1)	Below 1 Ω (START)
			6 (ST2) - 7 (IG2) - 8 (AM2)	Below 1 Ω (START)

TORQUE SPECIFICATIONS

Part Tightened	N*m	kgf*cm	ft.*lbf
Starter assembly x Transmission housing	37	377	27
Starter assembly x Terminal 30	5.9	60	52
Commutator end frame x Brush holder	3.8	39	34 in.*lbf
Starter drive housing assembly x Magnetic Starter Switch	9.3	95	82 in.*lbf
Commutator end frame x Starter drive housing assembly	9.3	95	82 in.*lbf
Lead wire x Terminal C of starter	5.9	60	52 in.*lbf
Engine wire x Cylinder block	13	133	10
No. 2 exhaust manifold stay x Transmission housing and Exhaust manifold	3.9	40	35 in.*lbf
Wire harness x Cylinder block	13	133	10

1GR-FE CHARGING

SERVICE DATA

Battery	Voltage		Standard	12.6 to 12.9 V at 20°C (68°F)
Charging circuit without load	Amperage			10A or less
	Voltage			13.2 to 14.8 V
Generator (DENSO made)	Generator brush holder assembly	Brush length	Standard	10.5 mm (0.413 in.)
			Minimum	4.5 mm (0.177 in.)
	Generator rotor assembly	Resistance	Standard	2.3 to 2.7 Ω at 20°C (68°F)
		Slip ring diameter	Standard	14.2 to 14.4 mm (0.559 to 0.567 in.)
			Minimum	14.0 mm (0.551 in.)

TORQUE SPECIFICATIONS

Part Tightened	N*m	kgf*cm	ft.*lbf
Generator assembly x V-ribbed belt tensioner and cylinder head	43	438	32
Generator assembly x Wire harness clamp bracket	8.0	82	71 in.*lbf
Generator assembly x Terminal B	10	100	7
Wire harness stay x Body	5.8	59	51 in.*lbf
V-bank cover x Intake air surge tank sub-assembly and Air cleaner assembly	7.5	76	66 in.*lbf
Engine under cover sub-assembly No. 1 x Frame assembly	29	296	21
Retainer plate x Drive end frame assembly generator (Denso made)	26	27	23 in.*lbf
Generator coil assembly x Drive frame assembly generator (Denso made)	5.8	59	51 in.*lbf
Generator brush holder assembly x Generator coil assembly (Denso made)	1.8	18	16 in.*lbf
Generator rear end cover x Generator coil assembly (Denso made)	4.6	47	41 in.*lbf
Generator pulley x Generator rotor assembly (Denso made)	111	1,125	81

A750E AUTOMATIC TRANSMISSION

SERVICE DATA

Line pressure Engine idling	D position	356 to 426 kPa (3.6 to 4.3 kgf*cm^2, 52 to 62 psi)
	R position	500 to 600 kPa (5.1 to 6.1 kgf*cm^2, 73 to 87 psi)
Line pressure AT stall (Throttle valve fully opened)	D position	1,367 to 1,477 kPa (14.0 to 15.1 kgf*cm^2, 198 to 214 psi)
	R position	1,278 to 1,506 kPa (13.0 to 15.4 kgf*cm^2, 185 to 218 psi)
Engine stall revolution	D positions	2,250 to 2,550 rpm
Time lag	N → D position	Less than 1.2 seconds
	N → R position	Less than 1.5 seconds
Engine idle speed (A/C OFF)	N position	650 to 750 rpm
Drive plate runout	Max.	0.20 mm (0.0079 in.)
Torque converter runout	Max.	0.30 mm (0.0118 in.)
Torque converter clutch installation distance		23.28 mm (0.9166 in.) or more
Shift schedule		
D position		
(Throttle valve fully opened)	1 → 2	32 to 40 mph (52 to 64 km/h)
	2 → 3	60 to 67 mph (97 to 108 km/h)
	3 → 4	89 to 97 mph (143 to 156 km/h)
	4 → 5	116 to 125 mph (187 to 201 km/h)
	5 → 4	111 to 119 mph (179 to 191 km/h)
	4 → 3	81 to 88 mph (130 to 141 km/h)
	3 → 2	54 to 58 mph (87 to 94 km/h)
	2 → 1	25 to 29 mph (41 to 46 km/h)
(Throttle valve fully closed)	4 → 5	30 to 34 mph (48 to 54 km/h)
	5 → 4	18 to 21 mph (29 to 34 km/h)
4 position		
(Throttle valve fully opened)	1 → 2	32 to 40 mph (52 to 64 km/h)
	2 → 3	60 to 67 mph (97 to 108 km/h)
	3 → 4	89 to 97 mph (143 to 156 km/h)
	5 → 4	124 to 132 mph (200 to 213 km/h)
	4 → 3	81 to 88 mph (130 to 141 km/h)
	3 → 2	54 to 58 mph (87 to 94 km/h)
	2 → 1	25 to 29 mph (41 to 46 km/h)
3 position		
(Throttle valve fully opened)	1 → 2	32 to 40 mph (52 to 64 km/h)
	2 → 3	60 to 67 mph (97 to 108 km/h)
	4 → 3	87 to 94 mph (140 to 151 km/h)
	3 → 2	54 to 58 mph (87 to 94 km/h)
	2 → 1	25 to 29 mph (41 to 46 km/h)
2 position		
(Throttle valve fully opened)	1 → 2	32 to 40 mph (52 to 64 km/h)
	3 → 2	58 to 64 mph (93 to 103 km/h)
	2 → 1	25 to 29 mph (41 to 46 km/h)
L position		
(Throttle valve fully opened)	2 → 1	25 to 29 mph (41 to 46 km/h)

Lock-up point Throttle valve opening 5%		
D position 5th gear	Lock-up ON	47 to 51 mph (75 to 82 km/h)
	Lock-up OFF	42 to 46 mph (68 to 74 km/h)
4 position 4th gear	Lock-up ON	45 to 48 mph (72 to 78 km/h)
	Lock-up OFF	40 to 43 mph (64 to 70 km/h)

AUTOMATIC TRANSMISSION UNIT

1st and reverse return spring free length	Standard: 23.74 mm (0.9347 in.)
Rear planetary gear pinion thrust clearance	Standard: 0.2 to 0.6 mm (0.008 to 0.024 in.)
Rear planetary gear bushing inside diameter	Standard: 20.075 mm (0.7904 in.)
1st and reverse brake pack clearance	0.8 to 1.1 mm (0.031 to 0.043 in.)
Flange thickness (1st and reverse brake)	Mark 0: 0 mm (0 in.) Mark 2: 0.2 mm (0.008 in.) Mark 4: 0.4 mm (0.016 in.) Mark 6: 0.6 mm (0.024 in.) Mark 8: 0.8 mm (0.031 in.) Mark 10: 1.0 mm (0.039 in.) Mark 12: 1.2 mm (0.047 in.) Mark 14: 1.4 mm (0.055 in.)
Intermediate shaft run out	Standard: 0.08 mm (0.003 in.)
Intermediate shaft diameter	Standard A: 25.962 to 25.975 mm (1.022 to 1.023 in.) Standard B: 25.962 to 25.975 mm (1.022 to 1.023 in.) Standard C: 32.062 to 32.075 mm (1.262 to 1.263 in.) Standard D: 32.062 to 32.075 mm (1.262 to 1.263 in.)
Rear planetary ring gear flange bushing inside diameter	Standard: 32.18 mm (1.2667 in.)
Center planetary gear pinion thrust clearance	Standard: 0.12 to 0.68 mm (0.005 to 0.027 in.)
Brake piston return spring No.2 free length	Standard: 17.45 mm (0.687 in.)
Brake piston return spring free length	Standard: 17.05 mm (0.671 in.)
Front planetary gear pinion thrust clearance	Standard: 0.20 to 0.60 mm (0.008 to 0.024 in.)
Front planetary gear bushing inside diameter	Standard: 57.48 mm (2.263 in.)
Brake piston No.1 piston stroke	0.42 to 0.72 mm (0.017 to 0.028 in.)
Flange thickness (brake piston No.1)	Mark 0: 2.0 mm (0.079 in.) Mark 1: 2.2 mm (0.087 in.) Mark 2: 2.4 mm (0.094 in.) Mark 3: 2.6 mm (0.102 in.)
Brake piston return spring No.3 free length	Standard: 15.72 mm (0.619 in.)
Snap ring and race clearance	0.05 to 0.33 mm (0.002 to 0.013 in.)
Flange thickness	No. 1: 3.7 mm (0.146 in.)
	No. 2: 3.8 mm (0.150 in.)
	No. 3: 3.9 mm (0.154 in.)
	No. 4: 4.0 mm (0.158 in.)
	No. 5: 4.1 mm (0.161 in.)
	No. 6: 4.2 mm (0.165 in.)

OIL PUMP

Body clearance	Standard: 0.10 to 0.17 mm (0.0039 to 0.0067 in.)
	Maximum: 0.17 mm (0.0067 in.)
Tip clearance	Standard: 0.07 to 0.15 mm (0.0028 to 0.0059 in.)
	Maximum: 0.15 mm (0.0059 in.)
Side clearance	Standard: 0.02 to 0.05 mm (0.0008 to 0.0020 in.)
	Maximum: 0.05 mm (0.0020 in.)

Drive and driven gear thickness	Mark 0: 10.740 to 10.749 mm (0.4228 to 0.4232 in.)
	Mark 1: 10.750 to 10.759 mm (0.4232 to 0.4236 in.)
	Mark 2: 10.760 to 10.769 mm (0.4236 to 0.4240 in.)
	Mark 3: 10.770 to 10.779 mm (0.4240 to 0.4244 in.)
	Mark 4: 10.780 to 10.789 mm (0.4244 to 0.4248 in.)
Starter shaft bushing inside diameter	Standard (Front side): 21.577 mm (0.850 in.)
	Standard (Rear side): 32.08 mm (1.263 in.)
Front oil pump body inside diameter	38.188 mm (1.504 in.)

CLUTCH DRUM AND INPUT SHAFT

Direct clutch	
Pack clearance	0.50 to 0.80 mm (0.020 to 0.032 in.)
Clutch piston return spring free length	Standard: 19.51 mm (0.768 in.)
Flange thickness	No. 0: 3.0 mm (0.118 in.)
	No. 1: 3.1 mm (0.122 in.)
	No. 2: 3.2 mm (0.126 in.)
	No. 3: 3.3 mm (0.130 in.)
	No. 4: 3.4 mm (0.134 in.)
	No. 5: 3.5 mm (0.138 in.)
	No. 6: 3.6 mm (0.142 in.)
	No. 7: 3.7 mm (0.146 in.)
	No. 8: 3.8 mm (0.150 in.)
Reverse clutch	
Reverse clutch hub busing inside diameter	Standard: 35.812 to 35.837 mm (1.4099 to 1.4109 in.)
	Maximum: 35.887 mm (1.4129 in.)
Pack clearance	0.50 to 0.80 mm (0.020 to 0.032 in.)
Clutch piston return spring free length	Standard: 21.04 mm (0.828 in.)
Flange thickness	No. 0: 2.8 mm (0.110 in.)
	No. 1: 2.9 mm (0.114 in.)
	No. 2: 3.0 mm (0.118 in.)
	No. 3: 3.1 mm (0.122 in.)
	No. 4: 3.2 mm (0.126 in.)
	No. 5: 3.3 mm (0.130 in.)
	No. 6: 3.4 mm (0.134 in.)
	No. 7: 3.5 mm (0.138 in.)
	No. 8: 3.6 mm (0.142 in.)
	No. 9: 3.7 mm (0.146 in.)
	No. A: 3.8 mm (0.150 in.)
Froward clutch	
Forward clutch hub bushing inside diameter	Standard: 26.037 to 26.062 mm (1.0251 to 1.0261 in.)
	Maximum: 26.112 mm (1.028 in.)
Pack clearance	0.60 to 0.90 mm (0.024 to 0.035 in.)
Clutch piston return spring free length	Standard: 26.74 mm (1.053 in.)

Flange thickness	No. 0: 3.0 mm (0.118 in.)
	No. 1: 3.1 mm (0.122 in.)
	No. 2: 3.2 mm (0.126 in.)
	No. 3: 3.3 mm (0.130 in.)
	No. 4: 3.4 mm (0.134 in.)
	No. 5: 3.5 mm (0.138 in.)
	No. 6: 3.6 mm (0.142 in.)
	No. 7: 3.7 mm (0.146 in.)
	No. 8: 3.8 mm (0.150 in.)
	No. 9: 3.9 mm (0.154 in.)
	No. A: 4.0 mm (0.158 in.)

ACCUMULATOR

Spring	Free Length/Outer diameter	Color
B-3	70.5 mm (2.776 in.)/19.7 mm (0.776 in.)	Purple
C-2	62.0mm (2.441)/15.9 mm (0.626 in.)	White
C-1 (Inner)	30.4 mm (1.197 in.)/11.4 mm (0.449 in.)	Pink
C-1 (Outer)	48.76 mm (1.920 in.)/16.6 mm (0.654 in.)	Light green
C-3 (Inner)	44.0 mm (1.732 in.)/14.0 mm (0.551 in.)	Yellow
C-3 (Outer)	73.35 mm (2.888 in.)/19.9 mm (0.784 in.)	Red

TORQUE SPECIFICATIONS

Automatic Transmission Assembly

Part tightened	N*m	kgf*cm	ft.*lbf
Park/neutral position switch Bolt	13	129	9.4
Park/neutral position switch Nut	6.9	70	61 in.*lbf
Transmission control cable x Automatic transmission	14	143	10
Engine mounting insulator rear No.1 x Automatic transmission	65	663	48
Automatic transmission x Engine (17 mm head)	71	720	53
Automatic transmission x Engine (14 mm head)	37	380	27
Torque converter clutch x Drive plate	48	489	35
Transmission control cable bracket x Automatic transmission	14	143	10
Oil cooler tube clamp bolt A	14	138	10
Oil cooler tube clamp bolt B	5.5	56	49 in.*lbf
Oil cooler tube outlet x Automatic transmission	34	350	25
Oil cooler tube inlet x Automatic transmission	34	350	25
Speed sensor x Automatic transmission	5.4	55	48 in.*lbf
Drain plug x Oil pan	28	285	21
Transmission wire set bolt x Automatic transmission	5.4	55	48 in.*lbf
Transmission wire clamp x Valve body (A)	10	100	7
Transmission wire clamp x Valve body (B)	11	112	8
Oil strainer x Valve body	10	100	7
Oil pan x Transmission case	4.4	45	39 in.*lbf
Shift solenoid valve S1 x Valve body	6.4	65	56 in.*lbf
Shift solenoid valve S2 x Valve body	10	100	7
Shift solenoid valve SR x Valve body	6.4	65	56 in.*lbf
Shift solenoid valve SLU, SL2 x Valve body	6.4	65	56 in.*lbf
Shift solenoid valve SLT, SL1 x Valve body	6.4	65	56 in.*lbf
Valve body x Transmission case	11	112	8
Floor shift assembly x Body	14	143	10
Overflow plug x Automatic transmission	20	204	15
Refill plug x Automatic transmission	39	400	29
Transmission control cable assembly x Body	5.5	56	49 in.*lbf
Frame crossmember x Body	72	734	53
Frame crossmember x Engine mounting insulator rear	19	189	14
Front suspension member bracket LH x Body	33	336	24
Front suspension member bracket RH x Body	33	336	24
No. 2manifold stay x Transmission case	40	408	30
Manifold stay x Transmission case	40	408	30
Negative battery terminal x Battery	3.9	40	35 in.*lbf
Drive plate x Crankshaft	83	846	61

Automatic Transmission Unit

Part tightened	N*m	kgf*cm	ft.*lbf
Transmission housing x Transmission case (14 mm)	34	345	25
Transmission housing x Transmission case (17 mm)	57	581	42
Automatic transaxle breather tube x Transmission case	5.4	55	48 in.*lbf
Transmission wire x Transmission case	5.4	55	48 in.*lbf
Oil cooler tube union x Transmission case	29	296	21
Transmission control shaft lever LH	16	163	12
Transmission revolution sensor x Transmission case	5.4	55	48 in.*lbf
Extension housing assembly x Transmission case	34	345	25

Part tightened	N*m	kgf*cm	ft.*lbf
Oil pan x Transmission case	4.4	45	39 in.*lbf
Valve body oil strainer assembly x Transmission valve body assembly	10	100	7
Transmission valve body assembly x Transmission case	11	112	8
Parking lock pawl bracket x Transmission case	7.4	75	65 in.*lbf
Oil pump x Transmission case	21	214	15
Oil pump body x Stator shaft assembly	12	122	9
Lock plate x Transmission valve body assembly	6.4	65	57 in.*lbf
Shift solenoid valve SR x Transmission valve body assembly	6.4	65	57 in.*lbf
Shift solenoid valve S1 x Transmission valve body assembly	6.4	65	57 in.*lbf
Shift solenoid valve S2 x Transmission valve body assembly	10	100	7
ATF Temperature sensor x Transmission valve body assembly (12 mm)	10	100	7
ATF Temperature sensor x Transmission valve body assembly (36 mm)	11	112	8
Drain plug x Oil pan	28	285	21
Park/neutral position switch for Bolt	13	129	9.4
Park/neutral position switch for Nut	6.9	70	61 in.*lbf

A750F AUTOMATIC TRANSMISSION

SERVICE DATA

Line pressure Engine idling	D position	356 to 426 kPa (3.6 to 4.3 kgf*cm^2, 52 to 62 psi)
	R position	500 to 600 kPa (5.1 to 6.1 kgf*cm^2, 73 to 87 psi)
Line pressure AT stall (Throttle valve fully opened)	D position	1,367 to 1,477 kPa (14.0 to 15.1 kgf*cm^2, 198 to 214 psi)
	R position	1,278 to 1,506 kPa (13.0 to 15.4 kgf*cm^2, 185 to 218 psi)
Engine stall revolution	D positions	2,250 to 2,550 rpm
Time lag	N → D position	Less than 1.2 seconds
	N → R position	Less than 1.5 seconds
Engine idle speed (A/C OFF)	N position	650 to 750 rpm
Drive plate runout	Max.	0.20 mm (0.0079 in.)
Torque converter runout	Max.	0.30 mm (0.0118 in.)
Torque converter clutch installation distance		23.28 mm (0.9166 in.) or more
Shift schedule		
D position		
(Throttle valve fully opened)	1 → 2	32 to 40 mph (52 to 64 km/h)
	2 → 3	60 to 67 mph (97 to 108 km/h)
	3 → 4	89 to 97 mph (143 to 156 km/h)
	4 → 5	116 to 125 mph (187 to 201 km/h)
	5 → 4	111 to 119 mph (179 to 191 km/h)
	4 → 3	81 to 88 mph (130 to 141 km/h)
	3 → 2	54 to 58 mph (87 to 94 km/h)
	2 → 1	25 to 29 mph (41 to 46 km/h)
(Throttle valve fully closed)	4 → 5	30 to 34 mph (48 to 54 km/h)
	5 → 4	18 to 21 mph (29 to 34 km/h)
4 position		
(Throttle valve fully opened)	1 → 2	32 to 40 mph (52 to 64 km/h)
	2 → 3	60 to 67 mph (97 to 108 km/h)
	3 → 4	89 to 97 mph (143 to 156 km/h)
	5 → 4	124 to 132 mph (200 to 213 km/h)
	4 → 3	81 to 88 mph (130 to 141 km/h)
	3 → 2	54 to 58 mph (87 to 94 km/h)
	2 → 1	25 to 29 mph (41 to 46 km/h)
3 position		
(Throttle valve fully opened)	1 → 2	32 to 40 mph (52 to 64 km/h)
	2 → 3	60 to 67 mph (97 to 108 km/h)
	4 → 3	87 to 94 mph (140 to 151 km/h)
	3 → 2	54 to 58 mph (87 to 94 km/h)
	2 → 1	25 to 29 mph (41 to 46 km/h)
2 position		
(Throttle valve fully opened)	1 → 2	32 to 40 mph (52 to 64 km/h)
	3 → 2	58 to 64 mph (93 to 103 km/h)
	2 → 1	25 to 29 mph (41 to 46 km/h)
L position		
(Throttle valve fully opened)	2 → 1	25 to 29 mph (41 to 46 km/h)

Lock-up point Throttle valve opening 5%		
D position 5th gear	Lock-up ON	47 to 51 mph (75 to 82 km/h)
	Lock-up OFF	42 to 46 mph (68 to 74 km/h)
4 position 4th gear	Lock-up ON	45 to 48 mph (72 to 78 km/h)
	Lock-up OFF	40 to 43 mph (64 to 70 km/h)

AUTOMATIC TRANSMISSION UNIT

1st and reverse return spring free length	Standard: 23.74 mm (0.9347 in.)
Rear planetary gear pinion thrust clearance	Standard: 0.2 to 0.6 mm (0.008 to 0.024 in.)
Rear planetary gear bushing inside diameter	Standard: 20.075 mm (0.7904 in.)
1st and reverse brake pack clearance	0.8 to 1.1 mm (0.031 to 0.043 in.)
Flange thickness (1st and reverse brake)	Mark 0: 0 mm (0 in.) Mark 2: 0.2 mm (0.008 in.) Mark 4: 0.4 mm (0.016 in.) Mark 6: 0.6 mm (0.024 in.) Mark 8: 0.8 mm (0.031 in.) Mark 10: 1.0 mm (0.039 in.) Mark 12: 1.2 mm (0.047 in.) Mark 14: 1.4 mm (0.055 in.)
Intermediate shaft run out	Standard: 0.08 mm (0.003 in.)
Intermediate shaft diameter	Standard A: 25.962 to 25.975 mm (1.022 to 1.023 in.) Standard B: 25.962 to 25.975 mm (1.022 to 1.023 in.) Standard C: 32.062 to 32.075 mm (1.262 to 1.263 in.) Standard D: 32.062 to 32.075 mm (1.262 to 1.263 in.)
Rear planetary ring gear flange bushing inside diameter	Standard: 32.18 mm (1.2667 in.)
Center planetary gear pinion thrust clearance	Standard: 0.12 to 0.68 mm (0.005 to 0.027 in.)
Brake piston return spring No.2 free length	Standard: 17.45 mm (0.687 in.)
Brake piston return spring free length	Standard: 17.05 mm (0.671 in.)
Front planetary gear pinion thrust clearance	Standard: 0.20 to 0.60 mm (0.008 to 0.024 in.)
Front planetary gear bushing inside diameter	Standard: 57.48 mm (2.263 in.)
Brake piston No.1 piston stroke	0.42 to 0.72 mm (0.017 to 0.028 in.)
Flange thickness (brake piston No.1)	Mark 0: 2.0 mm (0.079 in.) Mark 1: 2.2 mm (0.087 in.) Mark 2: 2.4 mm (0.094 in.) Mark 3: 2.6 mm (0.102 in.)
Brake piston return spring No.3 free length	Standard: 15.72 mm (0.619 in.)

OIL PUMP

Body clearance	Standard: 0.10 to 0.17 mm (0.0039 to 0.0067 in.)
	Maximum: 0.17 mm (0.0067 in.)
Tip clearance	Standard: 0.07 to 0.15 mm (0.0028 to 0.0059 in.)
	Maximum: 0.15 mm (0.0059 in.)
Side clearance	Standard: 0.02 to 0.05 mm (0.0008 to 0.0020 in.)
	Maximum: 0.05 mm (0.0020 in.)
Drive and driven gear thickness	Mark 0: 10.740 to 10.749 mm (0.4228 to 0.4232 in.)
	Mark 1: 10.750 to 10.759 mm (0.4232 to 0.4236 in.)
	Mark 2: 10.760 to 10.769 mm (0.4236 to 0.4240 in.)
	Mark 3: 10.770 to 10.779 mm (0.4240 to 0.4244 in.)
	Mark 4: 10.780 to 10.789 mm (0.4244 to 0.4248 in.)
Starter shaft bushing inside diameter	Standard (Front side): 21.577 mm (0.850 in.)
	Standard (Rear side): 32.08 mm (1.263 in.)
Front oil pump body inside diameter	38.188 mm (1.504 in.)

CLUTCH DRUM AND INPUT SHAFT

Direct clutch

Pack clearance	0.50 to 0.80 mm (0.020 to 0.032 in.)
Clutch piston return spring free length	Standard: 19.51 mm (0.768 in.)
Flange thickness	No. 0: 3.0 mm (0.118 in.)
	No. 1: 3.1 mm (0.122 in.)
	No. 2: 3.2 mm (0.126 in.)
	No. 3: 3.3 mm (0.130 in.)
	No. 4: 3.4 mm (0.134 in.)
	No. 5: 3.5 mm (0.138 in.)
	No. 6: 3.6 mm (0.142 in.)
	No. 7: 3.7 mm (0.146 in.)
	No. 8: 3.8 mm (0.150 in.)
Reverse clutch	
Reverse clutch hub busing inside diameter	Standard: 35.812 to 35.837 mm (1.4099 to 1.4109 in.)
	Maximum: 35.887 mm (1.4129 in.)
Pack clearance	0.50 to 0.80 mm (0.020 to 0.032 in.)
Clutch piston return spring free length	Standard: 21.04 mm (0.828 in.)
Flange thickness	No. 0: 2.8 mm (0.110 in.)
	No. 1: 2.9 mm (0.114 in.)
	No. 2: 3.0 mm (0.118 in.)
	No. 3: 3.1 mm (0.122 in.)
	No. 4: 3.2 mm (0.126 in.)
	No. 5: 3.3 mm (0.130 in.)
	No. 6: 3.4 mm (0.134 in.)
	No. 7: 3.5 mm (0.138 in.)
	No. 8: 3.6 mm (0.142 in.)
	No. 9: 3.7 mm (0.146 in.)
	No. A: 3.8 mm (0.150 in.)
Froward clutch	
Forward clutch hub bushing inside diameter	Standard: 26.037 to 26.062 mm (1.0251 to 1.0261 in.)
	Maximum: 26.112 mm (1.028 in.)
Pack clearance	0.60 to 0.90 mm (0.024 to 0.035 in.)
Clutch piston return spring free length	Standard: 26.74 mm (1.053 in.)
Flange thickness	No. 0: 3.0 mm (0.118 in.)
	No. 1: 3.1 mm (0.122 in.)
	No. 2: 3.2 mm (0.126 in.)
	No. 3: 3.3 mm (0.130 in.)
	No. 4: 3.4 mm (0.134 in.)
	No. 5: 3.5 mm (0.138 in.)
	No. 6: 3.6 mm (0.142 in.)
	No. 7: 3.7 mm (0.146 in.)
	No. 8: 3.8 mm (0.150 in.)
	No. 9: 3.9 mm (0.154 in.)
	No. A: 4.0 mm (0.158 in.)

ACCUMULATOR

Spring	Free Length/Outer diameter	Color
B-3	70.5 mm (2.776 in.)/19.7 mm (0.776 in.)	Purple
C-2	62.0mm (2.441)/15.9 mm (0.626 in.)	White
C-1 (Inner)	30.4 mm (1.197 in.)/11.4 mm (0.449 in.)	Pink
C-1 (Outer)	48.76 mm (1.920 in.)/16.6 mm (0.654 in.)	Light green
C-3 (Inner)	44.0 mm (1.732 in.)/14.0 mm (0.551 in.)	Yellow

Spring	Free Length/Outer diameter	Color
C-3 (Outer)	73.35 mm (2.888 in.)/19.9 mm (0.784 in.)	Red

TORQUE SPECIFICATIONS

Automatic Transmission Assembly

Part tightened	N*m	kgf*cm	ft.*lbf
Park/neutral position switch Bolt	13	129	9.4
Park/neutral position switch Nut	6.9	70	61 in.*lbf
Transmission control cable x Automatic transmission	14	143	10
Engine mounting insulator rear No.1 x Automatic transmission	65	663	48
Automatic transmission x Engine (17 mm head)	71	720	53
Automatic transmission x Engine (14 mm head)	37	380	27
Torque converter clutch x Drive plate	48	489	35
Transmission control cable bracket x Automatic transmission	14	143	10
Oil cooler tube clamp bolt A	14	138	10
Oil cooler tube clamp bolt B	5.5	56	49 in.*lbf
Oil cooler tube outlet x Automatic transmission	34	350	25
Oil cooler tube inlet x Automatic transmission	34	350	25
Speed sensor x Automatic transmission	5.4	55	48 in.*lbf
Drain plug x Oil pan	28	285	21
Transmission wire set bolt x Automatic transmission	5.4	55	48 in.*lbf
Transmission wire clamp x Valve body (A)	10	100	7
Transmission wire clamp x Valve body (B)	11	112	8
Oil strainer x Valve body	10	100	7
Oil pan x Transmission case	4.4	45	39 in.*lbf
Shift solenoid valve S1 x Valve body	6.4	65	56 in.*lbf
Shift solenoid valve S2 x Valve body	10	100	7
Shift solenoid valve SR x Valve body	6.4	65	56 in.*lbf
Shift solenoid valve SLU, SL2 x Valve body	6.4	65	56 in.*lbf
Shift solenoid valve SLT, SL1 x Valve body	6.4	65	56 in.*lbf
Valve body x Transmission case	11	112	8
Floor shift assembly x Body	14	143	10
Overflow plug x Automatic transmission	20	204	15
Refill plug x Automatic transmission	39	400	29
Transmission control cable assembly x Body	5.5	56	49 in.*lbf
Frame crossmember x Body	72	734	53
Frame crossmember x Engine mounting insulator rear	19	189	14
Front suspension member bracket LH x Body	33	336	24
Front suspension member bracket RH x Body	33	336	24
No. 2 manifold stay x Automatic transmission	40	408	30
Manifold stay x Automatic transmission	40	408	30
Negative battery terminal x Battery	3.9	40	35 in.*lbf
Drive plate x Crankshaft	83	846	61
Propeller shaft heat insulator x Frame crossmember	16	160	12

Automatic Transmission Unit

Part tightened	N*m	kgf*cm	ft.*lbf
Transmission housing x Transmission case (14 mm)	34	345	25
Transmission housing x Transmission case (17 mm)	57	581	42
Automatic transaxle breather tube x Transmission case	5.4	55	48 in.*lbf
Transmission wire x Transmission case	5.4	55	48 in.*lbf
Oil cooler tube union x Transmission case	29	296	21
Transmission control shaft lever LH	16	163	12
Transmission revolution sensor x Transmission case	5.4	55	48 in.*lbf

Part tightened	N*m	kgf*cm	ft.*lbf
Transmission case adapter adapter x Transmission case	34	345	25
Oil pan x Transmission case	4.4	45	39 in.*lbf
Valve body oil strainer assembly x Transmission valve body assembly	10	100	7
Transmission valve body assembly x Transmission case	11	112	8
Parking lock pawl bracket x Transmission case	7.4	75	65 in.*lbf
Oil pump x Transmission case	21	214	15
Oil pump body x Stator shaft assembly	12	122	9
Lock plate x Transmission valve body assembly	6.4	65	57 in.*lbf
Shift solenoid valve SR x Transmission valve body assembly	6.4	65	57 in.*lbf
Shift solenoid valve S1 x Transmission valve body assembly	6.4	65	57 in.*lbf
Shift solenoid valve S2 x Transmission valve body assembly	10	100	7
ATF Temperature sensor x Transmission valve body assembly (36 mm)	11	112	8
ATF Temperature sensor x Transmission valve body assembly (12 mm)	10	100	7
Drain plug x Oil pan	28	285	21
Park/neutral position switch for Bolt	13	129	9.4
Park/neutral position switch for Nut	6.9	70	61 in.*lbf

CLUTCH

SERVICE DATA

Pedal height from asphalt sheet	-	183.5 to 193.5 mm (7.224 to 7.618 in.)
Clutch pedal free play	-	5.0 to 15.0 mm (0.197 to 0.591 in.)
Clutch pedal push rod play at pedal top	-	1.0 to 5.0 mm (0.039 to 0.197 in.)
Disc rivet head depth	Maximum	0.3 mm (0.012 in.)
Flywheel sub-assembly runout	Maximum	0.1 mm (0.004 in.)
Clutch release point from pedal full stroke end position	-	25 mm (0.984 in.) or more
Clutch cover	Minimum depth Minimum width	0.5 mm (0.020 in.) 6.0 mm (0.236 in.)
Clutch disc runout	Minimum	0.7 mm (0.028 in.)
Clutch start switch	ON (pushed) OFF (released)	Blow 1 Ω 10 kΩ or higher
Clutch start cancel switch Resistance	S/W OFF 2 - 4 2 - 4 (Apply battery voltage to terminals 1 and 3) S/W ON 2 - 4 (Apply battery voltage to terminals 1 and 3)	10 kΩ or higher 10 kΩ or higher Below 1 Ω

TORQUE SPECIFICATIONS

Part tightened	N*m	kgf*cm	ft.*lbf
Clutch pedal sub-assembly x Clutch pedal support	34	347	25
Clutch pedal support set bolt x Body for bolt	18	184	13
Clutch pedal support set bolt x Body for nut	14	145	10
Clutch master cylinder assembly x Clutch pedal support	12	122	8.9
Clutch master cylinder assembly x Clutch master cylinder to 2 way tube	15	155	11
Release cylinder bleeder plug x Clutch release cylinder assembly	11	110	8.0
Clutch release cylinder assembly x Transmission housing	12	120	8.7
Clutch release cylinder assembly x Clutch master cylinder to 2 way tube	15	153	11
Clutch release cylinder assembly x Clutch master cylinder to 2 way tube bracket	12	120	8.7
Clutch cover assembly x Flywheel sub-assembly	19	195	14
Release fork support x Transmission assembly	47	479	35
Clutch start switch assembly x Clutch pedal support	16	160	12
Clutch housing cover No. 1 x Transmission housing	12	120	8.7
Clutch line bracket x Transmission housing	19	194	14
Clutch accumulator x Transmission housing	12	120	8.7
Clutch accumulator x Flexible hose tube	15	155	11
Clutch pedal stopper bolt x Clutch pedal support	26	260	19
Clutch switch x Clutch pedal support	15	153	11

RA61F MANUAL TRANSMISSION

SERVICE DATA

Reverse idler gear thrust clearance	STD: MAX:	0.10 to 0.25 mm (0.0039 to 0.0098 in.) 0.25 mm (0.0098 in.)
Reverse idler gear radial clearance	STD: MAX:	0.015 to 0.050 mm (0.0006 to 0.0020 in.) 0.050 mm (0.0020 in.)
Slotted pin drive in depth	-	0 to 0.5 mm (0 to 0.050 in.)
Transmission case oil seal dimension A	-	60.0 to 60.8 mm (2.362 to 2.394 in.)
Preload	-	0.45 to 1.35 N*m (4.59 to 13.77 kgf*cm, 3.98 to 11.95 in.*lbf)
Manual Transmission extension housing oil seal dimension A	-	- 0.5 to 0.5 mm (- 0.197 to 0.197 in.)
6th gear thrust clearance	-	0.20 to 0.49 mm (0.0079 to 0.0193 in.)
3rd gear thrust clearance	-	0.09 to 0.52 mm (0.0035 to 0.0205 in.)
4th gear thrust clearance	-	0.12 to 0.38 mm (0.0047 to 0.0150 in.)
6th gear radial clearance	-	0.015 to 0.065 mm (0.0006 to 0.0026 in.)
3rd gear radial clearance	-	0.015 to 0.067 mm (0.0006 to 0.0026 in.)
4th gear radial clearance	-	0.015 to 0.067 mm (0.0006 to 0.0026 in.)
Input shaft runout	MAX:	0.03 mm (0.0012 in.)
Input shaft outer diameter	STD: A B C D E MIN: A B C D E	34.002 to 34.015 mm (1.3387 to 1.3392 in.) 44.985 to 45.000 mm (1.7711 to 1.7717 in.) 44.985 to 45.000 mm (1.7711 to 1.7717 in.) 41.985 to 42.000 mm (1.6530 to 1.6535 in.) 32.967 to 32.974 mm (1.2979 to 1.2982 in.) 34.002 mm (1.3387 in.) 44.985 mm (1.7711 in.) 44.985 mm (1.7711 in.) 41.985 mm (1.6530 in.) 32.967 mm (1.2979 in.)
6th gear inside diameter	STD: MAX:	51.015 to 51.040 mm (2.0085 to 2.0095 in.) 51.040 mm (2.0095 in.)
3rd gear inside diameter	STD: MAX:	51.015 to 51.040 mm (2.0085 to 2.0095 in.) 51.040 mm (2.0095 in.)
4th gear inside diameter	STD: MAX:	51.015 to 51.040 mm (2.0085 to 2.0095 in.) 51.040 mm (2.0095 in.)
Gear shift fork No. 2 or No. 3 claw and glove of the transmission hub sleeve No. 2 clearance	No. 2 shift fork No. 3 shift fork	0.28 to 0.84 mm (0.0110 to 0.0331 in.) 0.28 to 0.65 mm (0.0110 to 0.0256 in.)
6th gear synchronizer ring back and 6th gear spline end clearance	STD: MIN:	0.70 to 1.50 mm (0.0276 to 0.0591 in.) 0.70 mm (0.0276 in.)
3rd gear synchronizer ring back and 3rd gear spline end clearance	STD: Inner Middle Outer MIN: Inner Middle Outer	1.20 to 2.20 mm (0.0472 to 0.0866 in.) 0.60 to 1.80 mm (0.0236 to 0.0709 in.) 0.80 to 1.80 mm (0.0315 to 0.0709 in.) 1.20 mm (0.0472 in.) 0.60 mm (0.0236 in.) 0.80 mm (0.0315 in.)
4th gear synchronizer ring back and 4th gear spline end clearance	STD: MIN:	0.70 to 1.50 mm (0.0276 to 0.0591 in.) 0.70 mm (0.0276 in.)
3rd gear thrust washer thickness	STD: MIN:	7.12 to 7.18 mm (0.2803 to 0.2827 in.) 7.12 mm (0.2803 in.)
Input shaft front bearing snap ring	Mark A B C D E F	2.65 to 2.70 mm (0.1043 to 0.1063 in.) 2.70 to 2.75 mm (0.1063 to 0.1083 in.) 2.75 to 2.80 mm (0.1083 to 0.1102 in.) 2.80 to 2.85 mm (0.1102 to 0.1122 in.) 2.85 to 2.90 mm (0.1122 to 0.1142 in.) 2.90 to 2.95 mm (0.1142 to 0.1161 in.)

Clutch hub No. 2 setting shaft snap ring	Mark A B C D E F G	1.77 to 1.82 mm (0.0697 to 0.0717 in.) 1.82 to 1.87 mm (0.0717 to 0.0736 in.) 1.87 to 1.92 mm (0.0736 to 0.0756 in.) 1.92 to 1.97 mm (0.0756 to 0.0776 in.) 1.97 to 2.02 mm (0.0776 to 0.0795 in.) 2.02 to 2.07 mm (0.0795 to 0.0815 in.) 2.07 to 2.12 mm (0.0815 to 0.0835 in.)
Gear thrust washer shaft snap ring	Mark A B C D E F	2.07 to 2.12 mm (0.0815 to 0.0835 in.) 2.12 to 2.17 mm (0.0835 to 0.0854 in.) 2.17 to 2.22 mm (0.0854 to 0.0874 in.) 2.22 to 2.27 mm (0.0874 to 0.0894 in.) 2.27 to 2.32 mm (0.0894 to 0.0913 in.) 2.32 to 2.37 mm (0.0913 to 0.0933 in.)
Transmission clutch hub No. 3 shaft snap ring	Mark A B C D E F G	2.10 to 2.15 mm (0.0827 to 0.0847 in.) 2.15 to 2.20 mm (0.0847 to 0.0866 in.) 2.20 to 2.25 mm (0.0866 to 0.0886 in.) 2.25 to 2.30 mm (0.0886 to 0.0906 in.) 2.30 to 2.35 mm (0.0906 to 0.0925 in.) 2.35 to 2.40 mm (0.0925 to 0.0945 in.) 2.40 to 2.45 mm (0.0945 to 0.0965 in.)
Output shaft inside diameter	STD: MAX:	45.017 to 45.025 mm (1.7723 to 1.7726 in.) 45.025 mm (1.7726 in.)
Synchronizer ring back and gear spline end clearance	STD: MIN:	0.70 to 1.50 mm (0.0276 to 0.0591 in.) 0.70 mm (0.0276 in.)
Reverse gear thrust clearance	-	0.125 to 0.375 mm (0.0049 to 0.0148 in.)
1st gear thrust clearance	-	0.10 to 0.43 mm (0.0039 to 0.0169 in.)
2nd gear thrust clearance	-	0.10 to 0.43 mm (0.0039 to 0.0169 in.)
Reverse gear radial clearance	-	0.015 to 0.065 mm (0.0006 to 0.0026 in.)
1st gear radial clearance	-	0.015 to 0.067 mm (0.0006 to 0.0026 in.)
2nd gear radial clearance	-	0.015 to 0.067 mm (0.0006 to 0.0026 in.)
Counter gear runout	MAX:	0.03 mm (0.0012 in.)
Counter gear outer diameter	STD: A B C D E MIN: A B C D E	34.002 to 34.015 mm (1.3387 to 1.3392 in.) 36.985 to 37.000 mm (1.4561 to 1.4567 in.) 47.985 to 48.000 mm (1.8892 to 1.8898 in.) 53.985 to 54.000 mm (2.1254 to 2.1260 in.) 34.002 to 34.015 mm (1.3387 to 1.3392 in.) 34.002 mm (1.3387 in.) 36.985 mm (1.4561 in.) 47.985 mm (1.8892 in.) 53.985 mm (2.1254 in.) 34.002 mm (1.3387 in.)
Reverse gear inside diameter	STD: MAX:	51.015 to 51.040 mm (2.0085 to 2.0095 in.) 51.040 mm (2.0095 in.)
1st gear inside diameter	STD: MAX:	54.015 to 54.040 mm (2.1266 to 2.1276 in.) 54.040 mm (2.1276 in.)
2nd gear inside diameter	STD: MAX:	60.015 to 60.040 mm (2.3628 to 2.3638 in.) 60.040 mm (2.3638 in.)
Gear shift fork No. 4 claw and glove of the transmission hub sleeve No. 3 clearance	-	0.26 to 0.84 mm (0.0102 to 0.0331 in.)
Gear shift fork No. 1 claw and glove of the transmission hub sleeve No. 1 clearance	-	0.15 to 0.35 mm (0.0059 to 0.0138 in.)
Reverse gear synchronizer ring back and reverse gear spline end clearance	STD: MIN:	0.70 to 1.30 mm (0.0276 to 0.0512 in.) 0.70 mm (0.0276 in.)
1st gear synchronizer ring back and 1st gear spline end clearance	STD: Inner Middle Outer MIN: Inner Middle Outer	1.48 to 2.12 mm (0.0583 to 0.0835 in.) 0.68 to 1.92 mm (0.0268 to 0.0756 in.) 0.88 to 1.72 mm (0.0346 to 0.0677 in.) 1.48 mm (0.0583 in.) 0.68 mm (0.0268 in.) 0.88 mm (0.0346 in.)

2nd gear synchronizer ring back and 2nd gear spline end clearance	STD: Inner Middle Outer MIN: Inner Middle Outer	1.48 to 2.12 mm (0.0583 to 0.0835 in.) 0.68 to 1.92 mm (0.0268 to 0.0756 in.) 0.88 to 1.72 mm (0.0346 to 0.0677 in.) 1.48 mm (0.0583 in.) 0.68 mm (0.0268 in.) 0.88 mm (0.0346 in.)
Counter gear rear bearing snap ring	Mark A B C D E F G H J K L M	2.35 to 2.40 mm (0.0925 to 0.0945 in.) 2.40 to 2.45 mm (0.0945 to 0.0965 in.) 2.45 to 2.50 mm (0.0965 to 0.0984 in.) 2.50 to 2.55 mm (0.0984 to 0.1004 in.) 2.55 to 2.60 mm (0.1004 to 0.1024 in.) 2.60 to 2.65 mm (0.1024 to 0.1043 in.) 2.65 to 2.70 mm (0.1043 to 0.1063 in.) 2.70 to 2.75 mm (0.1063 to 0.1083 in.) 2.75 to 2.80 mm (0.1083 to 0.1102 in. 2.80 to 2.85 mm (0.1102 to 0.1122 in.) 2.85 to 2.90 mm (0.1122 to 0.1142 in.) 2.90 to 2.95 mm (0.1142 to 0.1161 in.)
Clutch hub No. 1 shaft snap ring	Mark A B C D E F G	2.28 to 2.33 mm (0.0898 to 0.0917 in.) 2.33 to 2.38 mm (0.0917 to 0.0937 in.) 2.38 to 2.43 mm (0.0937 to 0.0957 in.) 2.43 to 2.48 mm (0.0957 to 0.0976 in.) 2.48 to 2.53 mm (0.0976 to 0.0996 in.) 2.53 to 2.58 mm (0.0996 to 0.1016 in.) 2.58 to 2.63 mm (0.1016 to 0.1035 in.)
Counter gear front bearing snap ring	Mark A B C D E F G H J K L M	2.35 to 2.40 mm (0.0925 to 0.0945 in.) 2.40 to 2.45 mm (0.0945 to 0.0965 in.) 2.45 to 2.50 mm (0.0965 to 0.0984 in.) 2.50 to 2.55 mm (0.0984 to 0.1004 in.) 2.55 to 2.60 mm (0.1004 to 0.1024 in.) 2.60 to 2.65 mm (0.1024 to 0.1043 in.) 2.65 to 2.70 mm (0.1043 to 0.1063 in.) 2.70 to 2.75 mm (0.1063 to 0.1083 in.) 2.75 to 2.80 mm (0.1083 to 0.1102 in.) 2.80 to 2.85 mm (0.1102 to 0.1122 in.) 2.85 to 2.90 mm (0.1122 to 0.1142 in.) 2.90 to 2.95 mm (0.1142 to 0.1161 in.)

TORQUE SPECIFICATIONS

Part tightened	N*m	kgf*cm	ft.*lbf
Transmission filler plug x Manual transmission	37	377	27
Manual transmission case cover x Manual transmission	12	117	8.5
Manual transmission x Engine for bolt A	72	730	53
Manual transmission x Engine for bolt B	37	380	28
Manual transmission x Engine mounting insulator rear No. 1	65	663	48
Frame crossmember sub-assembly No. 3 x Body	72	734	53
Frame crossmember sub-assembly No. 3 x Manual transmission	19	189	14
Manifold stay x Manual transmission	40	408	30
No. 2 manifold stay x Manual transmission	40	408	30
Battery x Negative battery terminal cable	3.9	40	35 in.*lbf
Gear shift fork No. 2 x Gear shift fork shaft No. 2	20	199	14
Gear shift fork No. 3 x Gear shift fork shaft No. 3	20	199	14
Transmission front case x Plug	39	400	29
Transmission front case x Interlock bracket	21	214	15
Transmission front case x Back-up light switch	44	449	33
Shift & select lever x Shift & select lever shaft	33	340	25
Transmission middle case x Drain plug	37	377	27
Transmission front case x Transmission middle case	40	408	30
Reverse idler gear shaft bolt x Reverse idler gear shaft	28	286	21
Transmission oil separator x Transmission middle case	8.5	87	75 in.*lbf
Bearing lock plate x Transmission rear case	11	115	8.3
Transmission rear case x Filler plug	37	377	27
Transmission rear case x Transmission middle case	40	408	30
Transmission rear case x Shift detent ball plug	25	250	18
Transmission rear case x Transmission case cover	18	184	13
Shift lever housing x Shift & select lever shaft	33	340	25
Floor shift control shift lever retainer sub-assembly x Transmission rear case	20	204	15
Front suspension member bracket LH x Body	33	336	24
Front suspension member bracket RH x Body	33	336	24
Accumulator to flexible hose tube x Flexible hose	15	153	11
Hose tube bracket x Manual transmission	19	194	14
Propeller shaft heat insulator x No. 3 frame crossmember sub-assembly	16	160	12

VF2A TRANSFER

SERVICE DATA

Rear output shaft		
Drive sprocket thrust clearance	Standard	0.10 to 0.25 mm (0.0039 to 0.0098 in.)
	Maximum	0.25 mm (0.0098 in.)
Output shaft rear journal surface diameter	(part A) Minimum	27.98 mm (1.1016 in.)
	(part B) Minimum	36.98 mm (1.4561 in.)
Drive sprocket radial clearance	Standard	0.010 to 0.055 mm (0.0004 to 0.0022 in.)
	Maximum	0.055 mm (0.0022 in.)
Front drive clutch sleeve to gear shift fork No. 1 clearance	Maximum	1.0 mm (0.039 in.)
High and low clutch sleeve to gear shift fork No. 2 clearance	Maximum	1.0 mm (0.039 in.)
Output shaft snap ring thickness	Mark K	2.00 to 2.05 mm (0.0787 to 0.0807 in.)
	Mark L	2.05 to 2.10 mm (0.0807 to 0.0827 in.)
	Mark A	2.10 to 2.15 mm (0.0827 to 0.0846 in.)
	Mark B	2.15 to 2.20 mm (0.0846 to 0.0866 in.)
	Mark C	2.20 to 2.25 mm (0.0866 to 0.0886 in.)
	Mark D	2.25 to 2.30 mm (0.0886 to 0.0906 in.)
	Mark E	2.30 to 2.35 mm (0.0906 to 0.0925 in.)
	Mark F	2.35 to 2.40 mm (0.0925 to 0.0945 in.)
	Mark G	2.40 to 2.45 mm (0.0945 to 0.0965 in.)
	Mark H	2.45 to 2.50 mm (0.0965 to 0.0984 in.)
	Mark J	2.50 to 2.55 mm (0.0984 to 0.1004 in.)
Input shaft		
Input shaft outside diameter	Minimum	47.59 mm (1.8736 in.)
Input shaft inside diameter	Maximum	39.14 mm (1.5409 in.)
Synchronizer ring back to input shaft spline clearance	Standard	1.05 to 1.85 mm (0.0413 to 0.0728 in.)
	Minimum	1.05 mm (0.0413 in.)
Input gear stopper shaft snap ring thickness	Mark A	2.10 to 2.15 mm (0.0827 to 0.0846 in.)
	Mark B	2.15 to 2.20 mm (0.0846 to 0.0866 in.)
	Mark C	2.20 to 2.25 mm (0.0866 to 0.0886 in.)
	Mark D	2.25 to 2.30 mm (0.0886 to 0.0906 in.)
	Mark E	2.30 to 2.35 mm (0.0906 to 0.0925 in.)
	Mark F	2.35 to 2.40 mm (0.0925 to 0.0945 in.)
	Mark G	2.40 to 2.45 mm (0.0945 to 0.0965 in.)
	Mark H	2.45 to 2.50 mm (0.0965 to 0.0984 in.)
	Mark J	2.50 to 2.55 mm (0.0984 to 0.1004 in.)
	Mark K	2.55 to 2.60 mm (0.1004 to 0.1024 in.)
	Mark L	2.60 to 2.65 mm (0.1024 to 0.1043 in.)
	Mark M	2.65 to 2.70 mm (0.1043 to 0.1063 in.)
	Mark N	2.70 to 2.75 mm (0.1063 to 0.1083 in.)
	Mark P	2.75 to 2.80 mm (0.1083 to 0.1102 in.)
	Mark Q	2.80 to 2.85 mm (0.1102 to 0.1122 in.)
	Mark R	2.85 to 2.90 mm (0.1122 to 0.1142 in.)
	Mark S	2.90 to 2.95 mm (0.1142 to 0.1161 in.)
	Mark T	2.95 to 3.00 mm (0.1161 to 0.1181 in.)
	Mark U	3.00 to 3.05 mm (0.1181 to 0.1201 in.)
Planetary gear		

Pinion gear thrust clearance	Standard	0.11 to 0.84 mm (0.0043 to 0.0331 in.)
	Maximum	0.84 mm (0.0331 in.)
Pinion gear radial clearance	Standard	0.009 to 0.038 mm (0.0004 to 0.0015 in.)
	Maximum	0.038 mm (0.0015 in.)
Input bearing shaft snap ring thickness	Mark 1	1.45 to 1.50 mm (0.0571 to 0.0591 in.)
	Mark 2	1.50 to 1.55 mm (0.0591 to 0.0610 in.)
	Mark 3	1.55 to 1.60 mm (0.0610 to 0.0630 in.)
	Mark 4	1.60 to 1.65 mm (0.0630 to 0.0650 in.)
	Mark 5	1.65 to 1.70 mm (0.0650 to 0.0669 in.)
Inner bearing press in depth	Standard	7.7 to 8.3 mm (0.303 to 0.327 in.)
Oil seal		
Oil seal drive in depth	Standard	-0.5 to 0.5 mm (-0.020 to 0.020 in.)

TORQUE SPECIFICATIONS

Transfer oil

Part tightened	N*m	kgf*cm	ft.*lbf
No. 1 transfer case plug (filler and drain) x Transfer assembly	37	377	27

Transfer case oil seal

Part tightened	N*m	kgf*cm	ft.*lbf
Lower transfer case protector x Transfer assembly	18	183	13

Extension housing oil seal

Part tightened	N*m	kgf*cm	ft.*lbf
Lower transfer case protector x Transfer assembly	18	183	13

Transfer assembly

Part tightened	N*m	kgf*cm	ft.*lbf
Transfer case plug x Front transfer case	19	190	14
Transfer oil pump body sub-assembly x Front transfer case	7.5	76	66 in.*lbf
Transfer oil separator sub-assembly x Front transfer case	7.5	76	66 in.*lbf
No. 1 transfer case plug (filler and drain) x Transfer assembly	37	377	27
Rear transfer case x Front transfer case	28	285	21
Transfer extension housing sub-assembly x Rear transfer case	12	22	9
Transfer output shaft companion flange (front and rear)	118	1,203	87
Transfer control shift lever retainer sub-assembly x Front transfer case	18	183	13
Transfer case cover sub-assembly x Front transfer case	18	183	13
Transfer bearing retainer sub-assembly x Front transfer case	12	117	8
Transfer indicator switch x Front transfer case	37	377	27
Transfer assembly x Transmission assembly	24	244	17
Lower transfer case protector x Transfer assembly	18	183	13

VF4B TRANSFER

SERVICE DATA

Rear output shaft

Drive sprocket thrust clearance	Standard	0.15 to 0.24 mm (0.0059 to 0.0094 in.)
	Maximum	0.24 mm (0.0094 in.)
Output shaft rear journal surface diameter	(part A) Minimum	27.98 mm (1.1016 in.)
	(part B) Minimum	31.98 mm (1.2591 in.)
	(part C) Minimum	34.98 mm (1.3772 in.)
	(part D) Minimum	36.98 mm (1.4559 in.)
Drive sprocket radial clearance	Standard	0.01 to 0.06 mm (0.0004 to 0.0024 in.)
	Maximum	0.06 mm (0.0024 in.)
Front drive clutch sleeve to center differential clearance	Maximum	0.84 mm (0.0331 in.)
High and low clutch sleeve to gear shift fork No. 2 clearance	Maximum	0.84 mm (0.0331 in.)

Input shaft

Input shaft outside diameter	Minimum	47.59 mm (1.8736 in.)
Input shaft inside diameter	Maximum	48.14 mm (1.8953 in.)
Input gear stopper shaft snap ring thickness	Mark A	2.10 to 2.15 mm (0.0827 to 0.0846 in.)
	Mark B	2.15 to 2.20 mm (0.0846 to 0.0866 in.)
	Mark C	2.20 to 2.25 mm (0.0866 to 0.0886 in.)
	Mark D	2.25 to 2.30 mm (0.0886 to 0.0906 in.)
	Mark E	2.30 to 2.35 mm (0.0906 to 0.0925 in.)
	Mark F	2.35 to 2.40 mm (0.0925 to 0.0945 in.)
	Mark G	2.40 to 2.45 mm (0.0945 to 0.0965 in.)
	Mark H	2.45 to 2.50 mm (0.0965 to 0.0984 in.)
	Mark J	2.50 to 2.55 mm (0.0984 to 0.1004 in.)
	Mark K	2.55 to 2.60 mm (0.1004 to 0.1024 in.)
	Mark L	2.60 to 2.65 mm (0.1024 to 0.1043 in.)
	Mark M	2.65 to 2.70 mm (0.1043 to 0.1063 in.)
	Mark N	2.70 to 2.75 mm (0.1063 to 0.1083 in.)
	Mark P	2.75 to 2.80 mm (0.1083 to 0.1102 in.)
	Mark Q	2.80 to 2.85 mm (0.1102 to 0.1122 in.)
	Mark R	2.85 to 2.90 mm (0.1122 to 0.1142 in.)
	Mark S	2.90 to 2.95 mm (0.1142 to 0.1161 in.)
	Mark T	2.95 to 3.00 mm (0.1161 to 0.1181 in.)
	Mark U	3.00 to 3.05 mm (0.1181 to 0.1201 in.)

Planetary gear

Pinion gear thrust clearance	Standard	0.11 to 0.84 mm (0.0043 to 0.0331 in.)
	Maximum	0.84 mm (0.0331 in.)
Pinion gear radial clearance	Standard	0.009 to 0.038 (0.0004 to 0.0015 in.)
	Maximum	0.038 mm (0.0015 in.)
Input bearing shaft snap ring thickness	Mark 1	1.45 to 1.50 mm (0.0571 to 0.0591 in.)
	Mark 2	1.50 to 1.55 mm (0.0591 to 0.0610 in.)
	Mark 3	1.55 to 1.60 mm (0.0610 to 0.0630 in.)
	Mark 4	1.60 to 1.65 mm (0.0630 to 0.0650 in.)
	Mark 5	1.65 to 1.70 mm (0.0650 to 0.0669 in.)
Inner bearing press in depth	Standard	7.7 to 8.3 mm (0.303 to 0.327 in.)

Oil seal

Oil seal drive in depth	Standard	-0.5 to 0.5 mm (-0.020 to 0.020 in.)

TORQUE SPECIFICATIONS

Transfer oil

Part tightened	N*m	kgf*cm	ft.*lbf
No. 1 transfer case plug (for filler and drain)	37	377	27

Transfer case oil seal

Part tightened	N*m	kgf*cm	ft.*lbf
Lower transfer case protector x Transfer assembly	18	183	13

Extension housing oil seal

Part tightened	N*m	kgf*cm	ft.*lbf
Lower transfer case protector x Transfer assembly	18	183	13

Transfer assembly

Part tightened	N*m	kgf*cm	ft.*lbf
Transfer case plug x Front transfer case	19	190	14
Transfer oil pump body sub-assembly x Front transfer case	7.5	76	66 in.*lbf
Transfer oil separator sub-assembly x Front transfer case	7.5	76	66 in.*lbf
No. 1 transfer case plug (for filler and drain)	37	377	27
Transfer shift fork shaft plug	19	190	14
Rear transfer case x Front transfer case	28	285	21
Transfer extension housing sub-assembly x Rear transfer case	12	122	9
Transfer output shaft companion flange (for front and rear)	118	1,203	87
Transfer control shift lever retainer sub-assembly x Front transfer case	18	183	13
Transfer case cover sub-assembly x Front transfer case	18	183	13
Transfer bearing retainer sub-assembly x Front transfer case	12	117	8
Transfer indicator switch x Front transfer case	37	377	27
Transfer assembly x Transmission assembly	24	244	17
Lower transfer case protector x Transfer assembly	18	183	13

Speedometer driven gear

Part tightened	N*m	kgf*cm	ft.*lbf
Vehicle speed sensor x Transfer extension housing sub-assembly	12	122	9

PROPELLER SHAFT

SERVICE DATA

Propeller shaft runout	Maximum	0.3 mm (0.012 in.)
Universal joint spider bearing axial play	Maximum	0 mm (0 in.)

TORQUE SPECIFICATIONS

Part Tightened	N*m	kgf*cm	ft.*lbf
Front propeller shaft assembly x Front differential carrier assembly	88	899	65
Front propeller shaft assembly x Transfer assembly	88	899	65
Rear propeller shaft assembly x Rear differential carrier assembly	88	899	65
Rear propeller shaft assembly x Transfer assembly	88	899	65

DRIVE SHAFT

TORQUE SPECIFICATIONS

Part Tightened	N*m	kgf*cm	ft.*lbf
Front lower ball joint attachment x Steering knuckle	160	1,631	118
Tie rod end sub-assembly x Steering knuckle	91	928	67
Front axle hub nut x Front drive shaft	235	2,396	174
Front speed sensor x Steering knuckle	13	127	9
Front speed sensor x Steering knuckle	8.3	85	73 in.*lbf
Front wheel	112	1,137	82
Battery negative terminal x Battery	3.9	40	35 in.*lbf

DIFFERENTIAL

SERVICE DATA

FRONT DIFFERENTIAL CARRIER

Companion flange vertical runout	Maximum: 0.10 mm (0.0039 in.)
Companion flange lateral runout	Maximum: 0.10 mm (0.0039 in.)
Drive pinion preload (at start of torque)	New bearing: 0.98 to 1.75 N*m (10to 16 kgf*cm, 8.7 to 14 in.*lbf) Reused bearing: 0.49 to 0.78 N*m (5 to 8 kgf*cm, 4.3 to 6.9 in.*lbf)
Total preload (Drive pinion preload plus)	0.22 to 0.85 N*m (6 to 9 kgf*cm, 1.9 to 7.7 in.*lbf)
Drive pinion to ring gear backlash	0.11 to 0.21 mm (0.0043 to 0.0083 in.)
Side gear backlash	0.15 mm (0.0059 in.)
Carrier oil seal drive in depth	3.9 to 4.8 mm (0.153 to 0.0189 in.)
Side oil seal drive in depth	LH side: -0.45 to 0.45 mm (-0.0177 to 0.0177in.) RH side: 4.8 to 5.8 mm (0.189 to 0.2284 in.)
w/A.D.D. type: Differential clutch sleeve to clutch sleeve fork clearance	Maximum: 0.35 m (0.0138 in.)
Side gear thrust washer thickness mm (in.)	1.48 to 1.52 (0.0583 to 0.0568) 1.53 to 1.57 (0.0602 to 0.0618) 1.58 to 1.62 (0.0622 to 0.0638) 1.63 to 1.67 (0.0642 to 0.0657) 1.68 to 1.72 (0.0661 to 0.0677) 1.73 to 1.77 (0.0681 to 0.0697) 1.78 to 1.82 (0.0701 to 0.0717) 1.83 to 1.87 (0.0720 to 0.0736) 1.88 to 1.92 (0.0740 to 0.0756)
Side bearing adjusting washer thickness mm (in.)	1.57 to 1.59 (0.0618 to 0.0626) 1.59 to 1.61 (0.0626 to 0.0634) 1.61 to 1.63 (0.0634 to 0.0642) 1.63 to 1.65 (0.0642 to 0.0650) 1.65 to 1.67 (0.0650 to 0.0657) 1.67 to 1.69 (0.0657 to 0.0665) 1.69 to 1.71 (0.0665 to 0.0673) 1.71 to 1.73 (0.0673 to 0.0681) 1.73 to 1.75 (0.0681 to 0.0689) 1.75 to 1.77 (0.0689 to 0.0697) 1.77 to 1.79 (0.0697 to 0.0705) 1.79 to 1.81 (0.0705 to 0.0713) 1.81 to 1.83 (0.0713 to 0.0720) 1.83 to 1.85 (0.0720 to 0.0728) 1.85 to 1.87 (0.0728 to 0.0736) 1.87 to 1.89 (0.0736 to 0.0744) 1.89 to 2.01 (0.0744 to 0.0791) 2.01 to 2.03 (0.0791 to 0.0799) 2.03 to 2.05 (0.0791 to 0.0807) 2.05 to 2.07 (0.0807 to 0.0815) 2.07 to 2.09 (0.0815 to 0.0822) 2.09 to 2.11 (0.0822 to 0.0830) 2.11 to 2.13 (0.0830 to 0.0839) 2.13 to 2.15 (0.0839 to 0.0846) 2.15 to 2.17 (0.0846 to 0.0854)

Drive pinion bearing adjusting washer thickness mm (in.)	1.69 to 1.71 (0.0665 to 0.0673) 1.72 to 1.74 (0.0677 to 0.0685) 1.75 to 1.77 (0.0689 to 0.0697) 1.78 to 1.80 (0.0700 to 0.0709) 1.81 to 1.83 (0.0713 to 0.0720) 1.84 to 1.86 (0.0724 to 0.0732) 1.87 to 1.89 (0.0736 to 0.0744) 1.90 to 1.92 (0.0748 to 0.0756) 1.93 to 1.95 (0.0760 to 0.0768) 1.96 to 1.98 (0.0772 to 0.0780) 1.99 to 2.01 (0.0783 to 0.0791) 2.02 to 2.04 (0.0795 to 0.0803) 2.05 to 2.07 (0.0807 to 0.0815) 2.08 to 2.10 (0.0819 to 0.0827) 2.11 to 2.13 (0.0831 to 0.0839) 2.14 to 2.16 (0.0843 to 0.0850) 2.17 to 2.19 (0.0854 to 0.0862) 2.20 to 2.22 (0.0866 to 0.0874) 2.23 to 2.25 (0.0878 to 0.0886) 2.26 to 2.28 (0.0890 to 0.0898) 2.29 to 2.31 (0.0902 to 0.0909) 2.32 to 2.34 (0.0913 to 0.0921)

SS

REAR DIFFERENTIAL

Companion flange vertical runout	Maximum: 0.10 mm (0.0039 in.)
Companion flange lateral runout	Maximum: 0.10 mm (0.0039 in.)
Drive pinion preload (at start of torque)	New bearing: 1.05 to 1.64 N*m (11to 17 kgf*cm, 9.3 to 15 in.*lbf) Reused bearing: 0.56 to 0.85 N*m (6 to 9 kgf*cm, 4.9 to 7.5 in.*lbf)
Total preload (Drive pinion preload plus)	0.39 to 0.59 N*m (4 to 6 kgf*cm, 3.4 to 5.2 in.*lbf)
Ring gear runout	Maximum: 0.07 mm (0.0028 in.)
Ring gear backlash	0.13 to 0.18 mm (0.0051 to 0.0071 in.)
Side gear backlash	0.05 to 0.20 mm (0.0020 to 0.0080 in.)
Differential case runout	Maximum: 0.07 mm (0.0028 in.)
Rear differential front oil seal drive in depth	0.55 to 1.45 mm (0.0213 to 0.0567 in.)
Differential lock type: Side gear thrust washer thickness mm (in.)	0.90 mm (0.059 in.) 1.00 mm (0.039 in.) 1.10 mm (0.043 in.) 1.20 mm (0.047 in.) 1.30 mm (0.051 in.)
Tooth contact pattern adjusting washer thickness mm (in.)	1.69 to 1.71 (0.0665 to 0.0673) 1.72 to 1.74 (0.0677 to 0.0685) 1.75 to 1.77 (0.0689 to 0.0709) 1.78 to 1.80 (0.0713 to 0.0720) 1.81 to 1.83 (0.0724 to 0.0732) 1.84 to 1.86 (0.0736 to 0.0744) 1.87 to 1.89 (0.0748 to 0.0756) 1.90 to 1.92 (0.0760 to 0.0768) 1.93 to 1.95 (0.0772 to 0.0780) 1.96 to 1.98 (0.0783 to 0.0791) 1.99 to 2.01 (0.0795 to 0.0803) 2.02 to 2.04 (0.0807 to 0.0815) 2.05 to 2.07 (0.0819 to 0.0827) 2.08 to 2.10 (0.0831 to 0.0839) 2.11 to 2.13 (0.0843 to 0.0839) 2.14 to 2.16 (0.0843 to 0.0850) 2.17 to 2.19 (0.0854 to 0.0862) 2.20 to 2.22 (0.0866 to 0.0874) 2.23 to 2.25 (0.0878 to 0.0886) 2.26 to 2.28 (0.0890 to 0.0898) 2.29 to 2.31 (0.0902 to 0.0909) 2.32 to 2.34 (0.0913 to 0.0921)

TORQUE SPECIFICATIONS

FRONT DIFFERENTIAL CARRIER

Part tightened	N*m	kgf*cm	ft.*lbf
Differential breather hose x Differential carrier	13	133	10
No. 3 differential support x No. 1 differential mount nut	87	887	64
No. 3 differential support x Differential carrier	108	1,100	80
No. 2 differential support x Differential carrier	160	1,630	118
No. 1 differential support x Differential carrier	186	1,900	137
Differential tube x Differential carrier	110	1,120	81
Differential tube x Differential vacuum actuator	21	210	15
Drive pinion companion flange x Drive pinion	370	3,770	273
Differential side bearing retainer x Differential carrier	50	510	37
Differential case x Differential rig gear	97	985	71
Differential carrier x Drain lug	65	660	48
Differential carrier x Filler plug	39	400	29

REAR DIFFERENTIAL CARRIER

Part tightened	N*m	kgf*cm	ft.*lbf
Axle housing x Drain plug Axle housing x Filler plug	49	500	36
Differential carrier x Propeller shaft	88	899	65
Drive pinion companion flange nut x Differential drive pinion	370	3,770	273
Bearing cap x Differential bearing adjusting nut lock	13	130	9
Differential case x Differential ring gear	97	985	71
RH differential case x LH differential case (Differential lock type)	47	480	35

AXLE

SERVICE DATA

Front axle hub bearing backlash	Maximum	0.05 mm (0.0020 in.)
Front axle hub bearing runout	Maximum	0.05 mm (0.0020 in.)
Rear axle shaft bearing backlash	Maximum	0.05 mm (0.0020 in.)
Rear axle shaft bearing runout	Maximum	0.05 mm (0.0020 in.)
Rear axle shaft runout	Maximum	1.5 mm (0.0591 in.)
Rear axle shaft flange runout	Maximum	0.05 mm (0.0020 in.)

TORQUE SPECIFICATIONS

Part Tightened	N*m	kgf*cm	ft.*lbf
Front wheel	112	1,137	82
Rear wheel	112	1,137	82
Front wheel adjusting nut x Front axle hub	275	2,804	203
Front axle with abs rotor bearing assembly x Steering knuckle	80	816	59
Front upper suspension arm x Steering knuckle	110	1,122	81
Front disc brake caliper assembly x Steering knuckle	123	1,254	91
Front brake tube bracket x Steering knuckle	29	296	21
Brake tube x Disc brake cylinder assembly	14 (15)	143 (155)	10 (11)
Battery negative terminal x Battery	3.9	40	35 in.*lbf
Rear axle shaft x Rear axle housing assembly	120	1,224	89
Parking brake cable x Parking brake plate	8.0	82	71 in.*lbf
Brake tube x Rear flexible hose	14 (15)	143 (155)	10 (11)

( ): For use without SST

SUSPENSION

SERVICE DATA

Vehicle height (See page SP-2)		
GSJ10L-GKASKA	A-B C-D	115.9 mm (4.56 in.) 81.4 mm (3.20 in.)
GSJ15L-GKFSKA	A-B C-D	87.0 mm (3.43 in.) 61.4 mm (2.42 in.)
GSJ15L-GKASKA	A-B C-D	87.0 mm (3.43 in.) 61.6 mm (2.43 in.)
Toe-in		
	A+B C-D Rack end length difference	0°05' +- 0°10' (0.08° +- 0.16°) 1.0 +- 2.0 mm (0.04 +- 0.08 in.) 1.0 mm (0.039 in.) or less
Wheel turning angle		
GSJ10L-GKASKA	Inside wheel - Outside wheel (Reference)	32°45' (30°45' to 33°45') 32.75°(30.75° to 33.75°) 28°56' (28.93°)
GSJ15L-GKFSKA	Inside wheel - Outside wheel (Reference)	33°10' (31°10' to 34°10') 33.17°(31.17° to 34.17°) 29°38' (29.63°)
GSJ15L-GKASKA	Inside wheel - Outside wheel (Reference)	33°10' (31°10' to 34°10') 33.17°(31.17° to 34.17°) 29°38' (29.63°)
Camber		
GSJ10L-GKASKA		-0°34' +- 30' (-0.57° +- 0.50°)
GSJ15L-GKFSKA		0°09' +- 30' (0.15° +- 0.50°)
GSJ15L-GKASKA		0°09' +- 30' (0.15° +- 0.50°)
Caster		
GSJ10L-GKASKA		3°34' +- 30' (3.57° +- 0.50°)
GSJ15L-GKFSKA		2°49' +- 30' (2.82° +- 0.50°)
GSJ15L-GKASKA		2°49' +- 30' (2.82° +- 0.50°)
Steering Axis Inclination (Reference)		
GSJ10L-GKASKA		12°55' +- 30' (12.92° +- 0.50°)
GSJ15L-GKFSKA		12°21' +- 30' (12.35° +- 0.50°)
GSJ15L-GKASKA		12°21' +- 30' (12.35° +- 0.50°)
Front upper suspension arm		
	Upper ball joint turning torque	4.5 N*m (46 kgf*cm, 40 in.*lbf) or less
Front lower suspension arm		
	Lower ball joint turning torque	3.0 N*m (31 kgf*cm, 27 in.*lbf) or less
Front stabilizer link assembly		
	Stabilizer link ball joint turning torque	0.05 to 1.96 N*m (0.5 to 20.0 kgf*cm, 0.4 to 17.3 in.*lbf)
Rear stabilizer link assembly		
	Stabilizer link ball joint turning torque	0.05 to 1.96 N*m (0.5 to 20.0 kgf*cm, 0.4 to 17.3 in.*lbf)

TORQUE SPECIFICATIONS

Part Tightened	N*m	kgf*cm	ft.*lbf
Tie rod end lock nut	88	897	65
Front support to front shock absorber nut x Front shock absorber	25	255	18
Front shock absorber with coil spring x Frame assembly	64	653	47
Front stabilizer link assembly x Steering knuckle	70	714	52
Engine under cover sub-assembly x Frame assembly	29	296	21
Front wheel	112	1,137	82
Front shock absorber x Front lower suspension arm	135	1,377	100
Wire harness bracket x Frame assembly	5.8	59	51 in.*lbf
Front upper suspension arm x Steering knuckle	110	1,122	81
Skid control sensor wire x Front upper suspension arm	13	127	9
Front upper suspension arm x Frame assembly	115	1,173	85
Front lower ball joint attachment x Front lower suspension arm	140	1,428	103
Front lower ball joint attachment x Steering knuckle	160	1,631	118
Front lower suspension arm x Frame assembly	135	1,377	100
Front stabilizer bracket x Frame assembly	40	408	30
Front stabilizer link assembly x Front stabilizer bar	70	714	52
Front stabilizer link assembly x Steering knuckle	70	714	52
Rear shock absorber x Rear axle housing assembly	98	1,000	72
Rear brake tube flexible hose x Rear brake tube	14 (15)	143 (155)	10 (11)
Rear wheel	112	1,137	82
Rear shock absorber x Frame assembly	25	255	18
Rear upper control arm x Frame assembly	80	816	59
Rear upper control arm x Rear axle housing assembly	80	816	59
Parking brake cable x Frame assembly	13	127	9
Rear lower control arm x Frame assembly	130	1,326	96
Rear lower control arm x Rear axle housing assembly	130	1,326	96
Rear lateral control rod x Frame assembly	130	1,326	96
Rear lateral control rod x Rear axle housing assembly	130	1,326	96
Rear stabilizer bracket cover x Rear axle housing assembly	30	306	22
Rear stabilizer link assembly x Rear stabilizer bar	70	714	52
Rear stabilizer link assembly x Frame assembly	15	153	11

( ): for use without SST

TIRE AND WHEEL

SERVICE DATA

Cold tire inflation pressure	P265/70R17 113S	220 kPa (2.2 kgf/cm^2, 32 psi)
Tire runout		3.0 mm (0.118 in.) or less
Imbalance after adjustment	Steel wheel	12 g (0.026 lb) or less
	Aluminum wheel	6 g (0.013 lb) or less

BRAKE CONTROL

TORQUE SPECIFICATIONS

Part Tightened	N*m	kgf*cm	ft.*lbf
Front speed sensor x Steering knuckle	8.3	85	73 in.*lbf
Front wheel	112	1,137	82
Battery negative terminal x Battery	3.9	40	35 in.*lbf
Rear speed sensor x Rear axle housing	8.3	85	73 in.*lbf
Rear wheel	112	1,137	82
Yaw rate and deceleration sensor x Body	13	136	10

BRAKE

SERVICE DATA

Brake pedal height (from dash panel)		168.7 to 178.7 mm (6.642 to 7.035 in.)
Rod operating adapter length		201. 7 to 202.7 mm (7.941 to 7.980 in.)
Stop light switch clearance		0.5 to 2.6 mm (0.020 to 0.102 in.)
Brake pedal free play		1.0 to 6.0 mm (0.039 to 0.236 in.)
Brake pedal reserve distance from asphalt sheet at 490 N (50 kgf, 110.2 lbf)		More than 56mm (2.20 in.)
Front disc brake pad lining thickness	Standard Minimum	11.5 mm (0.453 in.) 1.0 mm (0.039 in.)
Front disc thickness	Standard Minimum	28.0 mm (1.102 in.) 26.0 mm (1.024 in.)
Front disc runout	Maximum	0.05 mm (0.0020 in.)
Rear disc brake pad lining thickness	Standard Minimum	10.0 mm (0.394 in.) 1.0 mm (0.039 in.)
Rear disc thickness	Standard Minimum	18.0 mm (0.709 in.) 16.0 mm (0.630 in.)
Rear disc runout	Maximum	0.20 mm (0.0079 in.)

TORQUE SPECIFICATIONS

Part Tightened	N*m	kgf*cm	ft.*lbf
Front disc brake bleeder plug x Disc brake cylinder assembly	11	110	8
Rear disc brake bleeder plug x Rear disc brake cylinder assembly	11	110	8
Rod operating adapter lock nut	26	260	19
Brake pedal x Brake pedal support sub-assembly	34	350	25
Brake pedal support sub-assembly x Hydraulic brake booster	14	145	10
Brake pedal support reinforcement x Reinforcement	20	204	15
Brake pedal support reinforcement x Brake pedal support sub-assembly	34	350	25
Battery negative terminal x Battery	3.9	40	35 in.*lbf
Brake booster accumulator assembly x Brake booster pump assembly	57	585	42
Master cylinder solenoid x Master cylinder body	32	325	24
Brake booster pump bracket x Master cylinder body	7.8	80	69 in.*lbf
Brake actuator bracket x Master cylinder body	7.8	80	69 in.*lbf
Pin x Brake booster pump assembly	7.8	80	69 in.*lbf
Brake booster pump (wire harness) x Master cylinder solenoid	2.9	30	26 in.*lbf
Brake actuator No. 1 tube x Brake booster pump assembly	14 (15)	143 (155)	10 (11)
Brake actuator No. 1 tube x Master cylinder body	14 (15)	143 (155)	10 (11)
Brake master cylinder reservoir sub-assembly x Master cylinder body	1.7	17	15 in.*lbf
Brake actuator No. 1 bracket x Master cylinder solenoid	7.8	80	69 in.*lbf
Brake tube x Hydraulic brake booster	14 (15)	143 (155)	10 (11)
Disc brake cylinder assembly x Steering knuckle	123	1,254	91
Brake tube x Disc brake cylinder assembly	14 (15)	143 (155)	10 (11)
Front wheel	112	1,137	82
Front flexible hose x Brake tube	14 (15)	143 (155)	10 (11)
Rear disc brake cylinder mounting x Rear axle housing assembly	105	1,071	78
Rear disc brake cylinder assembly x Rear disc brake cylinder mounting	88	897	65
Rear flexible hose x Rear disc brake cylinder assembly	31	316	23
Rear wheel	112	1,137	82
Rear flexible hose x Brake tube	14 (15)	143 (155)	10 (11)
Rear brake tube flexible hose x Brake tube	14 (15)	143 (155)	10 (11)

( ): for use without SST

PARKING BRAKE

SERVICE DATA

Parking brake lever travel at 200 N (20 kgf, 45 lbf)		5 to 7 clicks
Brake disc inside diameter	Standard Maximum	210 mm (8.268 in.) 211 mm (8.307 in.)
Parking brake shoe lining thickness	Standard Minimum	4.0 mm (0.157 in.) 1.0 mm (0.039 in.)
Parking brake shoe lever clearance		Less than 0.25 mm (0.0098 in.)
Parking brake switch	Released Pushed in	Below 1 Ω 10 kΩ or higher

TORQUE SPECIFICATIONS

Part Tightened	N*m	kgf*cm	ft.*lbf
Rear wheel	112	1,137	82
Parking brake lever x Body	13	127	9
Battery negative terminal x Battery	3.9	40	35 in.*lbf
Parking brake cable x Frame assembly	13	127	9
Parking brake cable x Parking brake plate	8.0	82	71 in.*lbf
Parking brake cable heat insulator x Frame assembly	13	127	9
Rear disc brake caliper assembly x Rear axle housing assembly	105	1,071	78

STEERING COLUMN

SERVICE DATA

Steering wheel free play	30 mm (1.18 in.)

TORQUE SPECIFICATIONS

Part Tightened	N*m	kgf*cm	ft.*lbf
Steering wheel set nut	50	510	37
Steering wheel pad set screw	8.8	90	78 n.*lbf
Steering column assembly set nut	21	214	15
Steering column assembly x Steering sliding w/ coupling yoke sub-assembly	26	265	19
Steering sliding w/ coupling yoke sub-assembly x Steering sliding yoke	36	367	27
Power steering gear box x intermediate shaft No. 2	36	367	27

POWER STEERING

SERVICE DATA

Power steering fluid	Fluid level rise	Maximum	5 mm (0.20 in.)
	Fluid pressure at idle speed with valve closed		8.800 kPa (89.7 kgf/cm^2, 1,276 psi)
Steering wheel	Steering effort at idle speed	Reference	6.0 N*m (60 kgf*cm, 53in.*lbf)
Power steering vane pump	Vane pump rotating torque		0.27 N*m (2.8 kgf*cm, 2.4 in.*lbf) or less
	Vane plate height	Minimum	7.6 mm (0.299 in.)
	Vane plate thickness	Minimum	1.405 mm (0.0553 in.)
	Vane plate length	Minimum	11.993 mm (0.4722 in.)
	Clearance between the rotor groove and plate	Maximum	0.025 mm (0.0010 in.)
	Spring free length	Minimum	29.2 mm (1.150 in.)
Power steering linK	Total preload (tie rod rotating torque)	Turning	0.29 to 1.96 N*m (2.9 to 20.0 kgf*cm, 2.57 to 17.35 in.*lbf)
	Total preload (control valve rotating torque)	Turning	0.8 to 1.6 N*m (8.2 to 16.3 kgf*cm, 7.1to 14.2 in.*lbf)

TORQUE SPECIFICATIONS

Part tightened	N*m	kgf*cm	ft.*lbf
Power steering vane pump			
Vane pump housing rear x Vane pump housing front	22	224	16
Pressure port union	69	704	51
Suction port union set bolt	9.0	92	80 in.*lbf
Vane pump assembly x Engine	21	214	15
Pressure feed tube assembly x Vane pump assembly	44 (42)	449 (428)	33 (31)

( ): For use without SST

Part tightened	N*m	kgf*cm	ft.*lbf
No. 1 Engine under cover Body	29	296	21
Rear Engine under cove x Body for 4WD	29	296	21
Power steering link assembly			
Control valve housing set bolt	18	184	13
Rack guide spring cap lock nut	69 (65)	700 (660)	51 (48)
Power steering rack x Rack end	103 (98)	1,050 (1,000)	76 (72)
Tie rod assembly lock nut	88	897	65
Turn pressure tube union nut	25 (23)	250 (235)	18 (17)
Power steering link assembly set bolt and nut	100	1,020	74
Pressure feed and return tubes x Control valve housing	25 (23)	250 (235)	18 (17)
Pressure feed tube clamp set bolt	28	286	21
Outlet return tube	44 (42)	499 (428)	33 (31)
Tie rod end x steering knuckle	49	500	36

( ): For use without SST

AIR CONDITIONING

SERVICE DATA

Refrigerant charge volume	570 to 630 g (20.11 to 22.22 oz.)
Magnetic clutch clearance	0.35 to 0.60 mm (0.014 to 0.024 in.)
Magnetic clutch relay	3 - 5 : 10kΩ or higher 3 - 5 : Below 1Ω(Apply battery voltage to terminals 1 and 2)
Heater blower relay	3 - 4 : Below 1Ω 3 - 4 : 10kΩ or higher (Apply battery voltage to terminals 1 and 2) 3 - 5 : 10kΩ or higher 3 - 5 : Below 1Ω(Apply battery voltage to terminals 1 and 2)

TORQUE SPECIFICATIONS

Part Tightened	N*m	kgf*cm	ft.*lbf
Negative battery terminal x Battery	3.9	40	35 in.*lbf

AIR CONDITIONING UNIT

Part Tightened	N*m	kgf*cm	ft.*lbf
No. 1 cooler evaporator x Cooler expansion valve x Air conditioning tube	3.5	36	31 in.*lbf
Air conditioning unit assembly x Instrument panel reinforcement	9.8	100	87 in.*lbf
Air conditioning unit assembly x Body	5.4	55	48 in.*lbf
Main body ECU (Driver side junction block x Instrument panel reinforcement	8.4	86	74 in.*lbf
Bracket x Main body ECU (Driver side junction block	8.4	86	74 in.*lbf
Steering intermediate shaft assembly x Thrust stopper	36	367	27

COMPRESSOR AND MAGNETIC CLUTCH

Part Tightened	N*m	kgf*cm	ft.*lbf
Magnet clutch hub x Cooler compressor assembly	18	184	13
Pressure relief valve x Cooler compressor assembly	8.0	82	71 in.*lbf
Cooler compressor assembly x Compressor bracket	24.5	250	18
Discharge hose sub-assembly x Cooler compressor assembly	9.8	100	87 in.*lbf
Suction hose sub-assembly x Cooler compressor assembly	9.8	100	87 in.*lbf
Suction hose sub-assembly x Timing chain cover	7.8	80	69
Battery hold down clamp x Battery	6.0	61	53 in.*lbf

CONDENSER

Part Tightened	N*m	kgf*cm	ft.*lbf
Cap x Modulator	2.9	30	25 in.*lbf
No. 1 cooler condenser cushion x Body	5.5	56	49 in.*lbf
Cooler condenser assembly x No. 1 cooler condenser cushion	5.5	56	49 in.*lbf
No. 2 cooler condenser cushion RH x Air conditioning tube assembly	5.4	55	48 in.*lbf
No. 2 cooler condenser cushion RH x Cooler condenser assembly	5.5	56	49 in.*lbf
No. 2 cooler condenser cushion LH x Cooler condenser assembly	5.5	56	49 in.*lbf
Cooler bracket x No. 2 cooler condenser cushion LH	5.4	55	48 in.*lbf
Air conditioning tube assembly x Cooler condenser assembly	5.4	55	48 in.*lbf
Discharge hose sub-assembly x Condenser assembly	5.4	55	48 in.*lbf

SUPPLEMENTAL RESTRAINT SYSTEM

TORQUE SPECIFICATIONS

Part Tightened	N*m	kgf*cm	ft.*lbf
Steering pad x Steering wheel assembly	8.8	90	78 in.*lbf
Steering wheel assembly x Steering column assembly	50	510	37
Front passenger airbag assembly x Instrument panel reinforcement	20	204	15
Curtain shield airbag assembly x Body	9.8	100	7
Center airbag sensor assembly x Body	17.5	179	13
Front airbag sensor x Body	9.0	92	80 in.*lbf
Side airbag sensor x Body	9.0	92	80 in.*lbf
Rear airbag sensor x Body	9.0	92	80 in.*lbf
Seat position sensor x Front seat assembly	8.0	82	71 in.*lbf

SEAT BELT

SERVICE DATA

FRONT SEAT INNER BELT ASSEMBLY:

Item	Tester Connection	Condition	Specified Condition
Standard resistance	10 - 11	Tongue plate fastened	Below 1 Ω
		Tongue plate released	10 kΩ or higher

TORQUE SPECIFICATIONS

FRONT PASSENGER SEAT BELT WARNING LIGHT:

Part Tightened	N*m	kgf*cm	ft.*lbf
Negative battery terminal x Battery	3.9	40	35 in.*lbf

FRONT SEAT INNER BELT ASSEMBLY:

Part Tightened	N*m	kgf*cm	ft.*lbf
Front seat inner belt assembly x Front seat adjuster sub-assembly	42	430	31
Negative battery terminal x Battery	3.9	40	35 in.*lbf

FRONT SEAT OUTER BELT ASSEMBLY:

Part Tightened	N*m	kgf*cm	ft.*lbf
Front shoulder belt anchor adjuster assembly x Access door panel sub-assembly	42	430	31
Front seat outer belt assembly x Access door panel sub-assembly (for Upper Stay of Retractor)	8.5	85	75 in.*lbf
Front seat outer belt assembly x Access door panel sub-assembly (for Lower Stay of Retractor)	42	430	31
Front seat outer belt assembly x Access door panel sub-assembly (for Through Anchor)	42	430	31
Negative battery terminal x Battery	3.9	40	35 in.*lbf

REAR SEAT INNER BELT ASSEMBLY:

Part Tightened	N*m	kgf*cm	ft.*lbf
Rear seat inner belt assembly x Body	42	430	31

REAR SEAT OUTER BELT ASSEMBLY:

Part Tightened	N*m	kgf*cm	ft.*lbf
Rear seat outer belt assembly x Body (for Upper Stay of Retractor)	8.5	85	75 in.*lbf
Rear seat outer belt assembly x Body (for Lower Stay of Retractor)	42	430	31
Rear seat outer belt assembly x Body (for Through Anchor)	42	430	31
Rear seat outer belt assembly x Body (for Anchor Plate)	42	430	31
Negative battery terminal x Battery	3.9	40	35 in.*lbf

REAR CENTER SEAT INNER BELT ASSEMBLY:

Part Tightened	N*m	kgf*cm	ft.*lbf
Rear center seat inner belt assembly x Body	42	430	31

REAR CENTER SEAT OUTER BELT ASSEMBLY:

Part Tightened	N*m	kgf*cm	ft.*lbf
Rear center seat outer belt assembly x Rear seatback frame sub-assembly	44	450	33

CRUISE CONTROL

TORQUE SPECIFICATIONS

Part Tightened	N*m	kgf*cm	ft.*lbft.*lbf
Cruise control main switch x Steering wheel	2.4	24	21 in.*lbf
Clutch switch assembly x Clutch pedal	15	155	11
Maine body ECU (Driver side j/b) x Instrument panel reinforcement assembly	8.4	86	74 in.*lbf
Instrument panel side bracket x Maine body ECU (Driver side j/b)	8.4	86	74 in.*lbf
Instrument panel side bracket x Body	8.4	86	74 in.*lbf
Negative battery terminal x Battery	3.9	40	35 in.*lbf

LIGHTING

SERVICE DATA

Headlight relay	3 - 5: 10 kΩ or higher 3 - 5: Below 1 Ω (Battery voltage applied to terminals 1 and 2)
Headlight dimmer relay	3 - 4: Below 1 Ω 3 - 4: 10 kΩ or higher (Battery voltage applied to terminals 1 and 2) 3 - 5: 10 kΩ or higher 3 - 5: Below 1 Ω (Battery voltage applied to terminals 1 and 2)
Taillight relay	3 - 5: 10 kΩ or higher 3 - 5: Below 1 Ω (Battery voltage applied to terminals 1 and 2)

TORQUE SPECIFICATIONS

Part Tightened	N*m	kgf*cm	ft.*lbf
Headlight assembly x Front combination light assembly	5.4	55	48 in.*lbf
Rear combination light assembly x Body	6.0	61	53 in.*lbf
Front door courtesy switch x Access door	7.0	71	62 in.*lbf
Access panel upper lock assembly x Access door	12	122	9
Access panel lower lock assembly x Access door	5.0	51	44 in.*lbf
Back door courtesy switch x Body	7.0	71	62 in.*lbf
Negative battery terminal x Battery	3.9	40	35 in.*lbf

WIPER AND WASHER

TORQUE SPECIFICATIONS

FRONT WIPER MOTOR

Part Tightened	N*m	kgf*cm	ft.*lbf
Front wiper motor x Front wiper link	7.5	76	66 in.*lbf
Front wiper motor and link x Cowl top panel outer	7.0	71	61 in.*lbf
Front wiper arm and blade assembly x Front wiper motor and link	25	255	18
Negative battery terminal x Battery	3.9	40	35 in.*lbf

REAR WIPER MOTOR

Part Tightened	N*m	kgf*cm	ft.*lbf
Rear wiper motor x Back door panel	5.5	56	49 in.*lbf
Rear wiper arm and blade assembly x Rear wiper motor	5.5	56	49 in.*lbf
Negative battery terminal x Battery	3.9	40	35 in.*lbf

WIPER SWITCH

Part Tightened	N*m	kgf*cm	ft.*lbf
Negative battery terminal x Battery	3.9	40	35 in.*lbf

WASHER MOTOR

Part Tightened	N*m	kgf*cm	ft.*lbf
Windshield washer jar assembly x Body	3.5	36	31 in.*lbf
Negative battery terminal x Battery	3.9	40	35 in.*lbf

DOOR LOCK

TORQUE SPECIFICATIONS

Part Tightened	N*m	kgf*cm	ft.*lbf
Front door lock x Front door panel	5.0	51	44 in.*lbf
Back door lock x Back door panel	5.0	51	44 in.*lbf
Negative battery terminal x Battery	3.9	40	35 in.*lbf

METER

TORQUE SPECIFICATIONS

Part Tightened	N*m	kgf*cm	ft.*lbf
Combination meter assembly x Instrument panel assembly	7.0	71	62 in.*lbf
Negative battery terminal x Battery	3.9	40	35 in.*lbf

AUDIO / VISUAL

SERVICE DATA

FRONT NO. 1 SPEAKER:

Item	Tester Connection	Specified Condition
Standard resistance	1 - 2	Approximately 4 Ω

FRONT NO. 2 SPEAKER:

Item	Tester Connection	Specified Condition
Standard resistance	3 - 4	Approximately 8 Ω

REAR SPEAKER:

Item	Tester Connection	Specified Condition
Standard resistance	1 - 2	Approximately 8 Ω

ROOF SPEAKER:

Item	Tester Connection	Specified Condition
Standard resistance	1 - 2	Approximately 4 Ω

STEERING PAD SWITCH:

Item	Tester Connection	Condition	Specified Condition
Standard resistance	12 (AU1) - 10 (EAU)	All switches released	Approximately 100 kΩ
		SEEK+ switch: pushed in	Below 2.5 Ω or less
		SEEK- switch: pushed in	Approximately 329 Ω
		VOL+ switch: pushed in	Approximately 1000 Ω
		VOL- switch: pushed in	Approximately 3110 Ω
	11 (AU2) - 10 (EAU)	All switches released	Approximately 100 kΩ
		MODE switch: pushed in	Below 2.5 Ω or less

WOOFER SPEAKER SWITCH:

Item	Tester Connection	Condition	Specified Condition
Standard resistance	3 (IN) - 4 (OUT)	OFF	10 kΩ or higher
		ON	Below 1 Ω

TORQUE SPECIFICATIONS

RADIO RECEIVER:

Part Tightened	N*m	kgf*cm	ft.*lbf
Radio bracket x Radio receiver assembly	2.5	25	22 in.*lbf
Radio receiver assembly x Instrument panel sub-assembly	2.5	25	22 in.*lbf
Negative battery terminal x Battery	3.9	40	35 in.*lbf

FRONT NO. 1 SPEAKER:

Part Tightened	N*m	kgf*cm	ft.*lbf
Front No. 1 speaker assembly x Front door panel sub-assembly	2.5	25	22 in.*lbf
Negative battery terminal x Battery	3.9	40	35 in.*lbf

FRONT NO. 2 SPEAKER:

Part Tightened	N*m	kgf*cm	ft.*lbf
Front No. 2 speaker assembly x Front speaker bracket	8.1	85	72 in.*lbf
Front speaker bracket x Instrument panel sub-assembly	2.5	25	22 in.*lbf
Negative battery terminal x Battery	3.9	40	35 in.*lbf

REAR SPEAKER:

Part Tightened	N*m	kgf*cm	ft.*lbf
Rear speaker assembly x Speaker mounting bracket	8.1	85	72 in.*lbf
Speaker mounting bracket x Body	8.1	85	72 in.*lbf
Negative battery terminal x Battery	3.9	40	35 in.*lbf

ROOF SPEAKER:

Part Tightened	N*m	kgf*cm	ft.*lbf
Negative battery terminal x Battery	3.9	40	35 in.*lbf

AMPLIFIER BOX SPEAKER ASSEMBLY:

Part Tightened	N*m	kgf*cm	ft.*lbf
Amplifier box speaker assembly x Body	8.1	85	72 in.*lbf
Negative battery terminal x Battery	3.9	40	35 in.*lbf

RADIO ANTENNA CORD:

Part Tightened	N*m	kgf*cm	ft.*lbf
Front No. 2 speaker assembly x Instrument panel sub-assembly	2.5	25	22 in.*lbf
Negative battery terminal x Battery	3.9	40	35 in.*lbf

RADIO ANTENNA HOLDER:

Part Tightened	N*m	kgf*cm	ft.*lbf
Radio antenna holder assembly x Body	8.4	85	74 in.*lbf
Negative battery terminal x Battery	3.9	40	35 in.*lbf

RADIO ANTENNA POLE:

Part Tightened	N*m	kgf*cm	ft.*lbf
Radio antenna pole x Radio antenna holder assembly	3.3	35	29 in.*lbf

STEREO JACK ADAPTER ASSEMBLY:

Part Tightened	N*m	kgf*cm	ft.*lbf
Negative battery terminal x Battery	3.9	40	35 in.*lbf

STEERING PAD SWITCH:

Part Tightened	N*m	kgf*cm	ft.*lbf
Steering pad switch x Steering wheel assembly	2.4	25	21 in.*lbf
Negative battery terminal x Battery	3.9	40	35 in.*lbf

WOOFER SPEAKER SWITCH:

Part Tightened	N*m	kgf*cm	ft.*lbf
Negative battery terminal x Battery	3.9	40	35 in.*lbf

PARK ASSIST / MONITORING

SERVICE DATA

CLEARANCE WARNING BUZZER:

Item	Tester Connection	Specified Condition
Standard resistance	1 - 2	Approximately 1 kΩ

ULTRASONIC SENSOR:

Item	Tester Connection	Specified Condition
Standard resistance	1 (E) - 2 (S)	8 to 12 kΩ

BACK SONAR SWITCH ASSEMBLY:

Item	Tester Connection	Condition	Specified Condition
Standard resistance	4 (ECU) - 6 (E)	OFF	Below 1 Ω
	3 (IG) - 6 (E)	ON	Below 1 Ω
	4 (ECU) - 6 (E)		Below 1 Ω

BACK SONAR SWITCH BULB:

Item	Specified Condition
Standard resistance	7 to 11 Ω at 20°C (68°F)

TORQUE SPECIFICATIONS

CLEARANCE WARNING ECU:

Part Tightened	N*m	kgf*cm	ft.*lbf
Clearance warning ECU assembly x Instrument panel upper bracket	12.5	125	9
Negative battery terminal x Battery	3.9	40	35 in.*lbf

CLEARANCE WARNING BUZZER:

Part Tightened	N*m	kgf*cm	ft.*lbf
Negative battery terminal x Battery	3.9	40	35 in.*lbf

ULTRASONIC SENSOR:

Part Tightened	N*m	kgf*cm	ft.*lbf
Negative battery terminal x Battery	3.9	40	35 in.*lbf

BACK SONAR SWITCH ASSEMBLY:

Part Tightened	N*m	kgf*cm	ft.*lbf
Negative battery terminal x Battery	3.9	40	35 in.*lbf

HORN

SERVICE DATA

HORN RELAY:

Item	Tester Connection	Specified Condition
Standard resistance	3 - 5	10 kΩ or higher
		Below 1 Ω (Battery voltage applied to terminals 1 and 2)

TORQUE SPECIFICATIONS

HORN RELAY:

Part Tightened	N*m	kgf*cm	ft.*lbf
Negative battery terminal x Battery	3.9	40	35

LOW PITCHED HORN:

Part Tightened	N*m	kgf*cm	ft.*lbf
Low pitched horn assembly x Body	9.8	100	7
Negative battery terminal x Battery	3.9	40	35

OTHER SYSTEM

SERVICE DATA

Inverter relay	3-5: 10 kΩ or higher 3-5: Below 1Ω (Battery voltage applied to terminals 1 and 2)

TORQUE SPECIFICATIONS

CLOCK

Part Tightened	N*m	kgf*cm	ft.*lbf
Negative battery terminal x Battery	3.9	40	35 in.*lbf

POWER OUTLET SOCKET

Part Tightened	N*m	kgf*cm	ft.*lbf
Negative battery terminal x Battery	3.9	40	35 in.*lbf

REAR POWER OUTLET SOCKET

Part Tightened	N*m	kgf*cm	ft.*lbf
Negative battery terminal x Battery	3.9	40	35 in.*lbf

VOLTAGE INVERTER

Part Tightened	N*m	kgf*cm	ft.*lbf
Voltage inverter x Body	8.5	87	75
Voltage inverter x Earth wire	6.9	70	61 in.*lbf
Negative battery terminal x Battery	3.9	40	35 in.*lbf

INVERTER MAIN SWITCH

Part Tightened	N*m	kgf*cm	ft.*lbf
Negative battery terminal x Battery	3.9	40	35 in.*lbf

WINDSHIELD / WINDOWGLASS

SERVICE DATA

Defogger relay	3 - 4: Below 1 Ω 3 - 4: 10 kΩ or higher (Battery voltage applied to terminals 1 and 2) 3 - 5: 10 kΩ or higher 3 - 5: Below 1 Ω (Battery voltage applied to terminals 1 and 2)

TORQUE SPECIFICATIONS

Part Tightened	N*m	kgf*cm	ft.*lbf
Power window regulator motor x Front door window regulator sub-assembly	5.4	55	48 in.*lbf
Back door glass x Back door hinge assembly	5.5	56	49 in.*lbf
Back window lock x Back door panel	5.0	51	44 in.*lbf
Spare disc wheel x Spare wheel carrier bracket sub-assembly	88	897	65
Negative battery terminal x Battery	3.9	40	35 in.*lbf

MIRROR

TORQUE SPECIFICATIONS

Part Tightened	N*m	kgf*cm	ft.*lbf
Outer rear view mirror x Front door panel	8.0	82	71 in.*lbf
Negative battery terminal x Battery	3.9	40	35 in.*lbf

INSTRUMENT PANEL

TORQUE SPECIFICATIONS

Part Tightened	N*m	kgf*cm	ft.*lbf
Front passenger airbag assembly x Instrument panel reinforcement	20	205	15
Combination meter assembly x Instrument panel assembly	7.0	71	62 in.*lbf
Negative battery terminal x Battery	3.9	40	35 in.*lbf

SEAT

TORQUE SPECIFICATIONS

FRONT SEAT ASSEMBLY:

Part Tightened	kgf*cm	N*m	ft.*lbf
Seat position sensor x Front seat adjuster sub-assembly (for Driver Side)	8.0	80	71 in.*lbf
Front seatback cover x Front seat adjuster sub-assembly (w/ Front Seat Side Airbag)	5.5	55	49 in.*lbf
Front seat armrest assembly x Front seat adjuster sub-assembly (for Driver Side)	38	385	28
Front seat assembly x Body	37	375	27
Negative battery terminal x Battery	3.9	40	35 in.*lbf

REAR SEAT ASSEMBLY (for LH Side):

Part Tightened	kgf*cm	N*m	ft.*lbf
Rear seatback lock assembly x Rear seatback frame sub-assembly	18	185	13
Rear seat cushion hinge sub-assembly x Rear seat cushion frame sub-assembly	18	185	13
Rear seatback assembly x Rear seatback hinge sub-assembly	37	375	27
Rear seat cushion assembly x Body	37	375	27

REAR SEAT ASSEMBLY (for RH Side):

Part Tightened	kgf*cm	N*m	ft.*lbf
Rear seatback lock assembly x Rear seatback frame sub-assembly	18	185	13
Rear seat cushion hinge sub-assembly x Rear seat cushion frame sub-assembly	18	185	13
Rear seatback assembly x Rear seatback hinge sub-assembly	37	375	27
Rear center seat outer belt assembly x Body (for Anchor Plate)	42	430	31
Rear seat cushion assembly x Body	37	375	27

ENGINE HOOD / DOOR

TORQUE SPECIFICATIONS

Part Tightened	N*m	kgf*cm	ft.*lbf
Hood hinge assembly x Hood sub-assembly	13	133	10
Hood lock assembly x Radiator support sub-assembly	8.0	82	71 in.*lbf
Front door upper hinge assembly x Body	26	265	19
Front door upper hinge assembly x Front door panel	26	265	19
Front door lower hinge assembly x Body	26	265	19
Front door lower hinge assembly x Front door panel	26	265	19
Access panel lock striker plate assembly x Access door panel	23	235	17
Front door outside handle frame sub-assembly x Front door panel	7.0	71	62 in.*lbf
Front door outside handle cover x Front door outside handle frame sub-assembly	5.5	56	49 in.*lbf
Front door window regulator sub-assembly x Front door panel	8.0	82	71 in.*lbf
Front door glass sub-assembly x Front door window regulator sub-assembly	8.0	82	71 in.*lbf
Front door lower frame bracket garnish x Front door panel	5.5	56	49 in.*lbf
Front door window frame rear lower x Front door panel	5.5	56	49 in.*lbf
Front door frame sub-assembly front lower x Front door panel	5.5	56	49 in.*lbf
Front door check assembly x Front door panel	5.5	56	49 in.*lbf
Front door check assembly x Body	30	306	22
Rear door upper hinge assembly x Body	26	265	19
Rear door upper hinge assembly x Access door panel	26	265	19
Rear door lower hinge assembly x Body	26	265	19
Rear door lower hinge assembly x Access door panel	26	265	19
Access panel upper lock striker assembly x Body	23	235	17
Access panel lock striker plate assembly x Body	23	235	17
Access panel lower lock stop x Access door panel	23	235	17
Access panel check assembly x Access door panel	5.5	56	49 in.*lbf
Access panel check assembly x Body	30	306	22
Access panel lock cancel lever assembly x Access door panel	5.0	51	44 in.*lbf
Access panel lock remote control assembly x Access door panel	12	122	9
Access panel inside handle sub-assembly x Access door panel	12	122	9
Front seat outer belt assembly (floor side) x Access door panel	42	428	31
Back door hinge assembly (door side) x Body	26	265	19
Back door hinge assembly (door side) x Back door panel	42	428	31
Back door lock striker plate assembly x Body	23	235	17
Back door side female stopper sub-assembly x Back door panel	7.0	71	62 in.*lbf
Back door damper stay lower bracket x Back door panel	20	199	14
Back door stay upper bracket LH x Back door panel	7.0	71	62 in.*lbf
Back door stay upper bracket RH x Back door panel	7.0	71	62 in.*lbf
Back door hinge assembly (glass side) x Back door panel	20	199	14
Spare wheel carrier bracket sub-assembly x Back door panel	48	489	35
Spare disc wheel x Spare wheel carrier bracket sub-assembly	88	897	65
Negative battery terminal x Battery	3.9	40	35 in.*lbf

EXTERIOR

TORQUE SPECIFICATIONS

FRONT BUMPER:

Part Tightened	N*m	kgf*cm	ft.*lbf
Front valance lower panel x Front bumper cover	8.0	80	71 in.*lbf
Front bumper extension x Body	65	665	48
Front bumper reinforcement x Front bumper extension	65	665	48
Front bumper upper retainer x Body	8.0	80	71 in.*lbf
Front bumper side support x Body	3.0	30	27 in.*lbf
Front bumper cover x Body (for Screw)	3.0	30	27 in.*lbf
Front bumper cover x Body (for Bolt)	8.0	80	71 in.*lbf
Radiator grille x Body	3.0	30	27 in.*lbf

REAR BUMPER:

Part Tightened	N*m	kgf*cm	ft.*lbf
Rear bumper bar bracket x Body	8.0	80	71 in.*lbf
Rear bumper side support sub-assembly x Body	8.0	80	71 in.*lbf
Rear bumper side stay x Body	8.0	80	71 in.*lbf
Rear bumper upper retainer x Body	3.0	30	27 in.*lbf
Rear bumper end retainer x Body	3.0	30	27 in.*lbf
Rear bumper cover x Body (for Bolt)	8.0	80	71 in.*lbf
Rear bumper cover x Body (for Screw)	3.0	30	27 in.*lbf
Negative battery terminal x Battery	3.9	40	35 in.*lbf

REAR SPOILER:

Part Tightened	N*m	kgf*cm	ft.*lbf
Rear spoiler cover x Back door panel sub-assembly	3.0	30	27 in.*lbf
Negative battery terminal x Battery	3.9	40	35 in.*lbf

FRONT DOOR GLASS WEATHERSTRIP:

Part Tightened	N*m	kgf*cm	ft.*lbf
Outer rear view mirror assembly x Front door panel sub-assembly	8.0	82	71 in.*lbf
Negative battery terminal x Battery	3.9	40	35 in.*lbf

ROOF DRIP SIDE FINISH MOULDING:

Part Tightened	N*m	kgf*cm	ft.*lbf
Front pillar outer garnish x Body	5.0	50	44 in.*lbf
Roof drip side finish moulding retainer x Body	5.0	50	44 in.*lbf

OUTSIDE MOULDING:

Part Tightened	N*m	kgf*cm	ft.*lbf
Spare tire x Spare wheel carrier bracket sub-assembly	88	897	65
Access door outside moulding sub-assembly x Body	5.0	50	44 in.*lbf
Front door outside moulding sub-assembly x Body	5.0	50	44 in.*lbf
Quarter outside moulding sub-assembly x Body	5.0	50	44 in.*lbf
Front fender moulding sub-assembly x Body	5.0	50	44 in.*lbf
Rocker panel moulding x Body	5.0	50	44 in.*lbf
Negative battery terminal x Battery	3.9	40	35 in.*lbf

FENDER PANEL MOULDING:

Part Tightened	N*m	kgf*cm	ft.*lbf
Quarter panel mudguard x Body	5.0	50	44 in.*lbf

Part Tightened	N*m	kgf*cm	ft.*lbf
Front fender mudguard x Body	5.0	50	44 in.*lbf
Negative battery terminal x Battery	3.9	40	35 in.*lbf

SIDE STEP:

Part Tightened	N*m	kgf*cm	ft.*lbf
No. 3 side step bracket x Side step sub-assembly	12.5	125	9
No. 2 side step bracket x Side step sub-assembly	12.5	125	9
No. 1 side step bracket x Side step sub-assembly	12.5	125	9
Side step sub-assembly x Body	20	200	14

BACK DOOR OUTSIDE GARNISH:

Part Tightened	N*m	kgf*cm	ft.*lbf
Spare tire x Spare wheel carrier bracket sub-assembly	88	897	65
Back door outside garnish sub-assembly x Back door panel sub-assembly	6.0	60	53 in.*lbf
Negative battery terminal x Battery	3.9	40	35 in.*lbf

FRONT DOOR BLACK OUT TAPE:

Part Tightened	N*m	kgf*cm	ft.*lbf
Negative battery terminal x Battery	3.9	40	35 in.*lbf

INTERIOR

TORQUE SPECIFICATIONS

ROOF HEADLINING:

Part Tightened	N*m	kgf*cm	ft.*lbf
Rear seat outer belt assembly x Body (for Anchor Plate)	42	430	31
Negative battery terminal x Battery	3.9	40	35 in.*lbf